OMEGA CHEMICAL SITE PRP ORGANIZED GROUP
1322 Scott Street, Suite 104
San Diego, CA 92106
Office: (619)-546-837, fax: (619) 546-9980
e-mail: edm@demaximis.com

January 25, 2019

Mr. Wayne Praskins
Superfund Project Manager
USEPA REGION IX
75 Hawthorne Street (SFD-7-3)
San Francisco, CA 94105

Subject: Operations, Maintenance and Monitoring Manual, Operable Unit 1 (On-Site Soil), Omega Chemical Superfund Site, Whittier, California

Dear Mr. Praskins,

Enclosed is the Operations, Maintenance and Monitoring Manual (OM&M Manual), Operable Unit 1 On-site Soil, prepared by CDM Smith on behalf of the Omega Chemical Site PRP Organized Group. This document is provided pursuant to the Remedial Design/Remedial Action Statement of Work under the Consent Decree Docket No. 10-05051 dated October 6, 2010. Please note that Appendix D (Health Risk Assessment) to the OM&M Manual was submitted to EPA on October 17, 2018 and is currently being reviewed. It is anticipated that the OM&M Manual will be amended with the HRA as part of the review comment process.

Should you have any questions, please feel free to contact me.

Sincerely,

Edward Modiano
Project Coordinator

cc:
Don Indermill, DTSC
Jaime Dinello, *de maximis, inc.*
Jeff Bamer, CDM Smith

Operable Unit 1 Soil Vapor Extraction System Operations, Maintenance, and Monitoring Manual

Omega Chemical Superfund Site,
Whittier, California

Prepared by:
CDM Smith
46 Discovery #250
Irvine, CA 92618

December 21, 2018

CDM Smith

Table of Contents

Section 1 Introduction 1-1

1.1 Purpose 1-1
1.2 Roles and Responsibilities 1-2
1.2.1 Omega PRP Organized Group 1-2
1.2.2 OM&M Contractor 1-2
1.2.3 Environmental Consultant 1-2
1.2.4 United States Environmental Protection Agency 1-2
1.3 Report Organization 1-2

Section 2 Security and Safety 2-1

2.1 Safety 2-1
2.2 Security 2-1
2.3 Emergency System Shutdown 2-1
2.4 Location of the Nearest Hospital 2-2
2.5 Emergency Response 2-2
2.6 Chemical Management 2-2

Section 3 Operation and Maintenance 3-1

3.1 OU-1 SVE System Description 3-1
3.1.1 Well Field Components 3-1
3.1.1.1 Vapor Extraction Wells 3-1
3.1.1.2 Dual Phase Extraction Wells and Vaults 3-2
3.1.1.3 Vapor Monitoring Probes 3-2
3.1.2 Treatment System Components 3-2
3.1.2.1 Piping Conveyance and Manifold 3-3
3.1.2.2 Moisture Separator 3-3
3.1.2.3 Blower and Silencer 3-4
3.1.2.4 Heat Exchanger 3-4
3.1.2.5 Granular Activated Carbon 3-5
3.1.2.6 Effluent Stack 3-5
3.1.2.7 Control Panel 3-6
3.1.2.8 Remote Autodialer 3-6
3.1.3 Miscellaneous Utility, Instruments, and Components 3-7
3.1.3.1 SCE Electrical Service 3-7
3.1.3.2 Electrical Meter Main and Conduits 3-7
3.2 OU-1 SVE System Operation 3-7
3.2.1 System Setup Procedures 3-7
3.2.1.1 VEWs and Piping Manifold 3-7
3.2.1.2 SVE Blower Setup Procedures 3-8
3.2.1.3 GAC Setup Procedures 3-8
3.2.2 System Startup Procedures 3-8
3.2.2.1 Initial Startup 3-8
3.2.3 System Operating Procedures 3-9
3.2.3.1 VEW and VMP Operating Parameters 3-9

3.2.3.2 SVE Equipment Operating Parameters 3-9
3.2.3.3 Routine Operation 3-10
3.2.3.4 Alarm Conditions 3-10
3.2.3.5 Periodic Maintenance 3-10

Section 4 Performance Monitoring 4-1

4.1 Remedial Action Objectives 4-1
4.2 Indoor and Ambient Air Monitoring 4-2
4.3 Analytical Soil Gas Data 4-2
4.4 Data Analysis and Reporting 4-2

Section 5 Operational Monitoring 5-1

5.1 SCAQMD System Monitoring 5-1
5.2 Operational Soil Gas Monitoring 5-1
5.3 Operational Monitoring and Inspection 5-2
5.4 Field Forms and Log 5-2
5.6 Data Analysis and Reporting 5-3

Section 6 References 6-1

List of Figures

Figure 1-1 OU-1 SVE System Vicinity Map
Figure 2-1 OU-1 SVE System
Figure 3-1 Site Plan with OU-1 Shallow Monitoring Network
Figure 3-2 Site Plan with OU-1 Deep Monitoring Network
Figure 4-1 Indoor and Ambient Air Quality Monitoring Site Map

List of Tables

Table 3-1 OU-1 VEWs and DPE Wells
Table 3-2 OU-1 Vapor Monitoring Probes
Table 3-3 Administrative and Safety Checklist
Table 3-4 Blower Setup
Table 3-5 GAC Piping Configuration No.1
Table 3-6 GAC Piping Configuration No.2
Table 3-7 Overall System Flow Rate and Vacuum
Table 3-8 Treatment System Alarms
Table 3-9 Treatment System Inspection and Maintenance
Table 4-1 Indoor and Ambient Air Quality Monitoring
Table 4-2 OU-1 VMP Monitoring
Table 5-1 OU-1 SVE System Operational Monitoring
Table 5-2 OU-1 VEW and DPE Well Monitoring

Appendices

Appendix A Health and Safety Plan
Appendix B Standard Operating Procedures
Appendix C Record Drawings
Appendix D SCAQMD HRA
Appendix E Equipment Manufacturer Documentation
Appendix F Field Forms
Appendix G Sampling and Analysis Plan

List of Acronyms

AOC	Administrative Settlement Agreement and Order on Consent
bgs	below ground surface
CD	Consent Decree
CDM Smith	CDM Smith Inc. (formerly Camp Dresser & McKee Inc. [CDM Inc.])
COC	chain of custody
de maximis	de maximis, inc.
deg F	degrees Fahrenheit
DPE	dual phase extraction
DQOs	Data Quality Objectives
GAC	granular activated carbon
GFCI	ground fault circuit interrupter
GWCS	Groundwater Containment System
HASP	Health and Safety Plan
HHRA	Human Health Risk Assessment
HOA	Hand/Off/Auto
hp	Horsepower
HHRA	Human Health Risk Assessment
HRA	Health Risk Assessment
Hz	Hertz
JHA	JHA Environmental, Inc.
LSH	level switch high
LSHH	level switch high-high
LSL	level switch low
Manual	OM&M Manual
O&M	operation and maintenance
OM&M	operations, maintenance and monitoring
OPOG	Omega Chemical Site PRP Organized Group
OU-1	Operable Unit 1
P&ID	Piping and Instrumentation Diagram
PD	positive displacement
PID	photoionization detector
PMP	Performance Monitoring Plan
PRP	Potentially Responsible Parties
PVC	polyvinyl chloride
QPERs	Quarterly Performance Evaluation Reports
RACCR	Remedial Action Construction Complete Report
RAO	Remedial Action Objective
ROD	Record of Decision
RPM	revolutions per minute
RSLs	Regional Screening Levels
SAP	Sampling and Analysis Plan
SCAQMD	South Coast Air Quality Management District
SCE	Southern California Edison
SCFM	standard cubic feet per minute
SDSs	Safety Data Sheets
SOPs	Standard Operating Procedures
SOW	Statement of Work
SSPRGs	Site-Specific Preliminary Remediation Goals
SVE	soil vapor extraction
USEPA	United States Environmental Protection Agency
VEWs	vapor extraction wells
VFD	variable frequency drive

VLS	vapor liquid separator
VMPs	vapor monitoring probes
VOCs	volatile organic compounds

Section 1
Introduction

Operable Unit 1 (OU-1) of the Omega Chemical Superfund Site is defined as the area of soil and groundwater contamination associated with the former Omega Chemical property located at 12504 and 12512 Whittier Boulevard, Whittier, California, and extending downgradient approximately 100 feet southwest of Putnam Street, Whittier, California (see **Figure 1-1**). The October 6, 2010 Consent Decree No. 10-05051 (CD) between the United States Environmental Protection Agency (USEPA) and Omega Chemical Site Potentially Responsible Parties (PRP) Organized Group (OPOG) requires OPOG to design, construct, and operate a Full-Scale soil vapor extraction (SVE) and treatment system and perform associated monitoring of the remedial action to address vadose zone soil contamination within OU-1 (USEPA 2010). OPOG completed construction of the Full Scale On-Site (OU-1) Soil Remedy in 2015 and has been operating it since.[1]

1.1 Purpose

On behalf of OPOG, CDM Smith Inc. (CDM Smith) has prepared this Operations, Maintenance and Monitoring (OM&M) Manual (Manual) for the Full-Scale On-Site (OU-1) SVE System.[2] This Manual satisfies the requirements of the Statement of Work (SOW) under the CD. As per Section 12.2 of the SOW, the purpose of this Manual is to include all necessary OM&M information for the operating personnel, and provide or address the following:

- System description;
- Startup and shutdown (normal and emergency) procedures;
- Criteria for determining when the remedial action is "Operational and Functional";
- Description and schedule of normal operation and maintenance (O&M) tasks, including equipment and material requirements, anticipated equipment replacement for significant components, availability of spare parts, provisions for remote monitoring and control, operator training and certification requirements, staffing needs, and related requirements;
- Indicators of system performance and/or maintenance (e.g., parameters to be monitored to determine timing for activated carbon replacement);
- Any planned variation in SVE rate, including whether each extraction well is to be operated at constant or variable flow rate, or in an extraction or (passive) injection mode, and a description of the magnitude and timing of any expected variation;

---

[1] All OU-1 SVE system design and installation phases are detailed in the Remedial Action Construction Complete Report (RACCR) (CDM Smith 2018).

[2] As described in the OU-1 On-Site Soil and OU-3 Indoor Air Removal Action Document Clarification letter sent to USEPA on November 20, 2017 (de maximis 2017), this document is being revised. Modifications to these documents are consistent with recent discussions with USEPA.

- Record-keeping and reporting requirements, including operation and inspection logs, maintenance records, and periodic reports; and
- Description and analysis of potential operating problems (e.g., equipment failure, higher than expected contaminant concentrations), including emergency operating and response activities and relevant health and safety information.

1.2 Roles and Responsibilities

This section briefly summarizes the organization and roles associated with OM&M activities.

1.2.1 Omega PRP Organized Group

OPOG is responsible for the overall direction of the remedial program for OU-1. A Project Coordinator is responsible for managing and implementing project activities. This includes interfacing with all agencies and third parties and managing OM&M activities including the OM&M Contractor (operator), Environmental Consultant, laboratories, and other subcontractors.

1.2.2 OM&M Contractor

The OM&M Contractor is responsible for operating the treatment systems and performing the day-to-day OM&M activities in compliance with this Manual, to meet the operational objectives and comply with the regulatory requirements. These activities include planning, equipment and process inspections, preventive and corrective maintenance, coordinating subcontractors as required, sample collection, emergency response, daily field forms, and other activities as required. The OM&M Contractor must have a minimum of 10 years of experience in OM&M of SVE treatment plant operations and be supervised by a Professional Engineer in the State of California. The OM&M Contractor's field staff will be trained such that they familiar with all aspects of the OU-1 SVE system, and have current Hazardous Waste Operations and Emergency Response training per 29 CFR 1910.120.

1.2.3 Environmental Consultant

The Environmental Consultant is responsible for providing environmental and compliance assessment, engineering and technical data review and assessment, and other services as required. The Environmental Consultant must have a minimum of 10 years of experience in managing remediation systems and USEPA coordination and be supervised by a Professional Engineer in the State of California.

1.2.4 United States Environmental Protection Agency

USEPA is the lead agency for this project and has been involved in this project since the former Omega Chemical Property was listed on the National Priority List in 1999. USEPA provides overall regulatory oversight, direction, and document review and approval. OPOG is responsible for reporting remedial progress and activities to USEPA.

1.3 Report Organization

The remaining sections of the Manual are organized as follows:

- **Section 2** discusses on-site security and safety, and emergency response procedures.

- **Section 3** describes all aspects of the OU-1 SVE system (all components and equipment, operation and control, maintenance, and startup and shutdown procedures).
- **Section 4** presents the Full-Scale On-Site (OU-1) Soils Remedial Action Objectives (RAOs) and related system performance monitoring activities.[3]
- **Section 5** describes the system operational monitoring activities.
- **Section 6** contains references to documents cited in this Manual.
- **Appendix A** contains the Health and Safety Plan (HASP) for OM&M.
- **Appendix B** contains standard operating procedures (SOPs).
- **Appendix C** contains the OU-1 SVE Record Drawings.
- **Appendix D** contains the Health Risk Assessment (HRA), which details the requirements for substantive compliance with South Coast Air Quality Management District (SCAQMD) regulations for the OU-1 SVE system.
- **Appendix E** contains equipment manufacturer documentation for all the OU-1 SVE system components.
- **Appendix F** contains all field forms relevant to the OU-1 SVE system.
- **Appendix G** contains the Sampling and Analysis Plan (SAP) which details the system monitoring strategy, sample identification and tracking protocol, and procedures for monitoring substantive compliance with applicable requirements and assessing treatment plant performance.

All tables and figures are located at the end of their respective sections in the text.

[3] This section of the Manual replaces the 2015 Performance Monitoring Plan (PMP) and its addendum (CDM Smith 2015a and 2015b).

OU-1 SVE System Vicinity Map

Figure 1-1

Operable Unit 1 (OU-1) On-site Soil Remedy
Omega Chemical Superfund Site, Whittier California

CDM Smith

Section 2
Security and Safety

This section discusses security, health and safety, and emergency procedures.

2.1 Safety

All OM&M activities will be performed in accordance with the site-specific HASP, included in **Appendix A**. Safety is the responsibility of every person that works on the OU-1 SVE system and each person will be held responsible for following the procedures described in the HASP. The HASP will be reviewed annually and updated as needed. This plan describes hazards present within OU-1, the safe work procedures that all personnel must follow to address those hazards, emergency procedures and contact information, operator training and certification requirements and other related information.

2.2 Security

Access to the OU-1 SVE treatment plant compound, which is shown on **Figure 2-1**, is restricted to authorized personnel. All visitors must obtain permission from OPOG prior to entry. If the Former Omega Administration is occupied, visitors will access the compound through the gate to the south of the building, which will be opened by tenant. The gates surrounding the compound, the control panel, and electrical disconnect are padlocked.

In addition, there is a security system with motion-activated video cameras that monitor the areas around the system equipment compound. The video cameras are continuously active unless disarmed. Operators and field staff must disarm this security system prior to accessing the compound to avoid triggering false alarms and rearm it when leaving. The cameras are monitored around the clock by a third-party security service, and failure to secure approved access from OPOG will result in false alarms and potential police response.

Before exiting, the following procedures must be observed:

- All valves, switches, control panels, and devices must be left in normal positions unless they are intended to be locked out/tagged out. Lockout/tagout procedures are presented in SOP 501 in **Appendix B**.
- All cords or external devices must be unplugged from the ground fault circuit interrupter (GFCI) and stored in the proper location.
- All treatment system compound locks must be securely locked, and the security system rearmed.

2.3 Emergency System Shutdown

The OU-1 SVE system may be shut down rapidly if required by an emergency. To shut down the OU-1 SVE System during an emergency, personnel may use the E-STOP button located on the

control panel. If pressed, the E-STOP button will initiate an emergency (immediate) stop of the operation of the system, and each of its moving or actively operating components. It will not de-energize all equipment. If necessary, that can only be accomplished by opening the service-rated disconnect located near the electrical utility service feed.

2.4 Location of the Nearest Hospital

The nearest hospital is the Presbyterian Intercommunity Hospital located at 12401 Washington Boulevard. A map to the hospital is included in the HASP, in **Appendix A**. To reach the Presbyterian Intercommunity Hospital by phone, call: (562) 698-0811 Driving directions from 12520 East Whittier Boulevard are as follows:

- Turn right (heading southeast) on East Whittier Boulevard or Putnam Street (depending on your location), and
- Turn right on Washington Boulevard and arrive at Presbyterian Intercommunity Hospital.

2.5 Emergency Response

In the event of a life-threatening emergency, call 911. When connected with the 911 dispatcher, respond appropriately to the questions and instructions. For local emergency response, onsite staff may use the following phone numbers (also detailed in the HASP, **Appendix A**):

- Los Angeles County Fire Department: (323) 881–2411
- Whittier Police Department: (562) 945-8250
- Los Angeles County Sheriff's Department: (323) 267-4800
- Presbyterian Intercommunity Hospital: (562) 698-0811
- California Poison Action Line: (800) 222-1222

2.6 Chemical Management

Safety data sheets (SDSs) of all chemicals being used and/or stored on-site are provided with the HASP in **Appendix A**. Operators and field staff will amend the SDS compilation for all new chemicals brought on-site and remove SDSs for chemicals no longer stored on-site. Records of chemical quantities will be kept on-site in accordance with the Fire Department requirements.

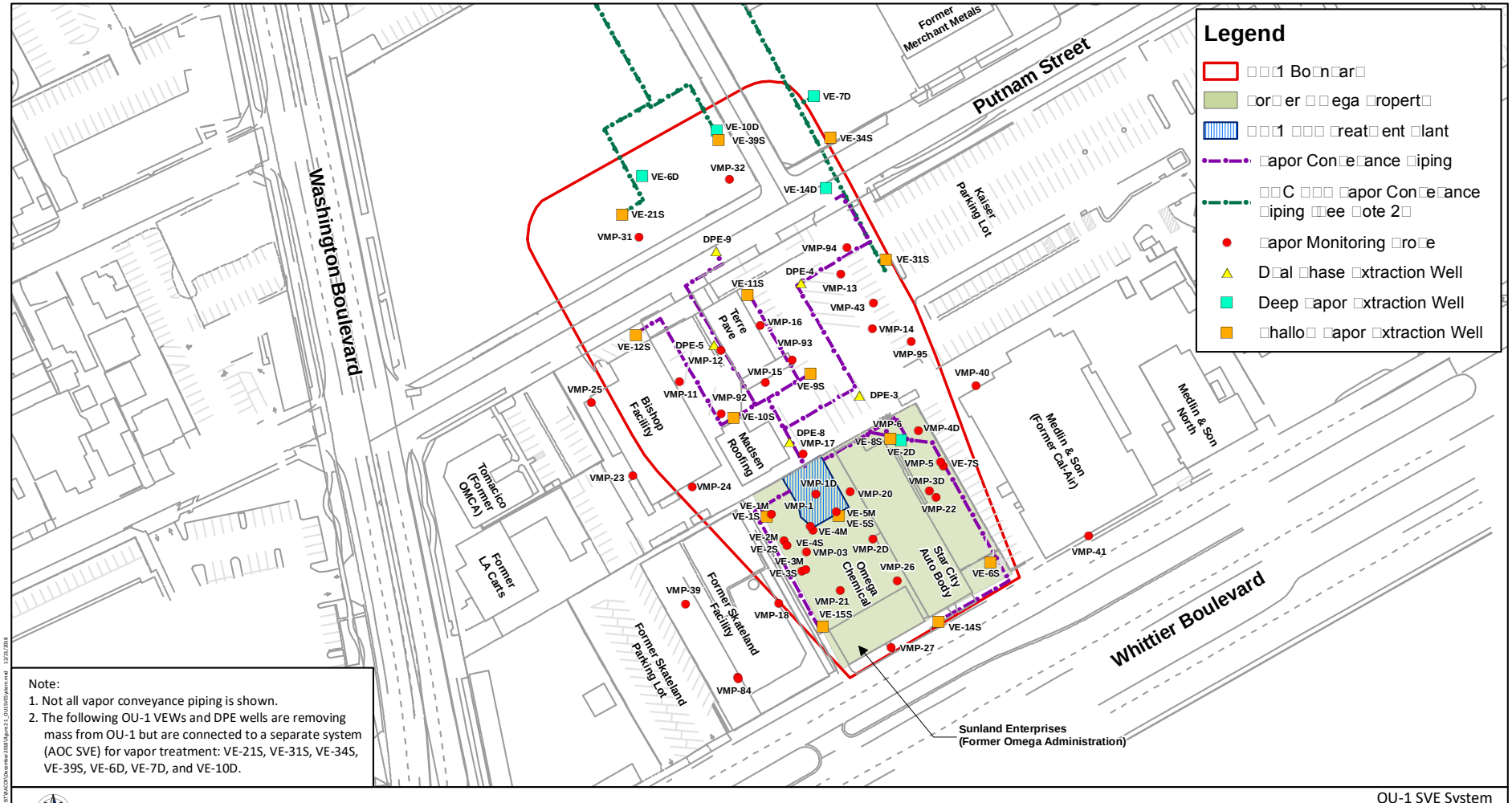

Legend
OU-1 Boundary
Former Omega Property
OU-1 SVE Treatment Plant
Vapor Conveyance Piping
AOC SVE Vapor Conveyance Piping (See Note 2)
Vapor Monitoring Probe
Dual Phase Extraction Well
Deep Vapor Extraction Well
Shallow Vapor Extraction Well
Washington Boulevard
Putnam Street
Whittier Boulevard
Former Merchant Metals
Kaiser Parking Lot
Terre Pave
Bishop Facility
Madsen Roofing
Tomacico (Former OMCA)
Former LA Carts
Former Skateland Facility
Former Skateland Parking Lot
Omega Chemical
Star City Auto Body
Medlin & Son (Former Cal-Air)
Medlin & Son North
Sunland Enterprises (Former Omega Administration)
VE-7D
VE-10D
VE-39S
VE-34S
VE-6D
VMP-32
VE-14D
VE-21S
VMP-31
DPE-9
VMP-94
VE-31S
DPE-4
VE-11S
VMP-13
VMP-43
VMP-16
VMP-14
VE-12S
DPE-5
VMP-93
VMP-95
VMP-12
VMP-15
VE-9S
VMP-40
VMP-25
VMP-11
VMP-92
DPE-3
VE-10S
VMP-6
VMP-4D
DPE-8
VMP-17
VE-8S
VE-2D
VMP-5
VE-7S
VMP-1D
VMP-3D
VMP-23
VMP-24
VMP-20
VE-1M
VE-1S
VMP-1
VE-5M
VE-5S
VMP-22
VE-4M
VE-2M
VE-2S
VE-4S
VMP-03
VMP-2D
VMP-41
VE-3M
VE-3S
VMP-26
VE-6S
VMP-39
VMP-21
VMP-18
VE-15S
VE-14S
VMP-27
VMP-84

Note:
1. Not all vapor conveyance piping is shown.
2. The following OU-1 VEWs and DPE wells are removing mass from OU-1 but are connected to a separate system (AOC SVE) for vapor treatment: VE-21S, VE-31S, VE-34S, VE-39S, VE-6D, VE-7D, and VE-10D.

120 0 120
Feet

OU-1 SVE Operations, Maintenance, and Monitoring Manual prepared by CDM Smith in December 2018

Operable Unit 1 (OU-1) On-site Soil Remedy
Omega Chemical Superfund Site, Whittier, California

OU-1 SVE System
Figure 2-1

CDM Smith

Section 3
Operation and Maintenance

This section provides operating information and procedures for OU-1 SVE system, which was installed at 12512 Whittier Boulevard, Whittier, California, as shown in **Figure 2-1**.

3.1 OU-1 SVE System Description

This section describes the equipment operating parameters of OU-1 SVE. Draft Record Drawings are included in **Appendix C**.

As shown in the Piping and Instrumentation Diagram (P&ID) (Drawings I-4 and I-4A) and Site Plan (Drawing C-3) in **Appendix C**, the OU-1 system includes a network of vapor extraction wells (VEWs), dual phase extraction (DPE) wells, and vapor monitoring probes (VMPs). The VEWs were designed and placed in the vadose zone to target the known areas of soil and soil vapor contamination and to mitigate the potential for contaminated soil gas to enter into occupied buildings within OU-1. DPE wells are also used to draw soil gas from the vadose zone to the treatment plant. The DPE wells extend into the groundwater table and are fitted with a groundwater extraction pump that removes groundwater locally, lowering the groundwater level in the well, exposing more soil for treatment by SVE. Groundwater extracted by the DPE wells is pumped to the groundwater containment system (GWCS) for treatment.[4] The VMPs were placed throughout OU-1 to monitor the effectiveness of the system. As vacuum is asserted by the positive displacement (PD) blower, vapors throughout the surrounding subsurface are gradually drawn toward the VEWs and DPE wells and pulled through their respective screened intervals. Extracted vapors are transported via lateral underground piping to the OU-1 SVE system treatment compound, which is enclosed with chain-link fence. Individual well laterals stub up inside the treatment compound and are equipped with valves and instruments for monitoring and optimizing the well network. The PD blower also discharges the extracted vapors through two granular activated carbon (GAC) vessels arranged in series for treatment via adsorption. After the GAC vessels, vapors are discharged to the atmosphere in substantive compliance with the requirements of SCAQMD, as outlined in the HRA (**Appendix D**).

The major components of the SVE system are described further in the following sections. Any anticipated equipment replacement for significant components and availability of spare parts and additional equipment information is included in the documentation from equipment manufacturers, provided in **Appendix E**.

3.1.1 Well Field Components

3.1.1.1 Vapor Extraction Wells

A network of VEWs was installed at and adjacent to the former Omega Chemical property. These include VEWs installed in the shallow vadose zone (above 30 feet below ground surface [bgs]), and the deep vadose zone (below 30 feet bgs). The wellheads consist of a buried tee connection

[4] OM&M of the DPE wells is addressed in this Manual, but OM&M of the GWCS is covered in its respective OM&M Manual.

(to allow future down-well, non-routine inspection and maintenance if needed), an air-tight cap, and a typical flush-mounted, well-completion box. Locations of the VEWs are listed in **Table 3-1** and depicted on **Figure 2-1** and in Drawings C-3 and C-4 of the Record Drawings provided in **Appendix C**. As shown in the Record Drawings, some VEWs that are located within OU-1 and contributing to OU-1 remedial action is physically connected to the Administrative Settlement Agreement and Order on Consent (AOC) SVE system. While the OM&M of those VEWs is addressed in this Manual, the OM&M of the AOC SVE system is covered in its respective OM&M Manual (Manual).[5]

3.1.1.2 Dual Phase Extraction Wells and Vaults

The DPE wells are intended to lower groundwater levels and facilitate greater vapor flow through the capillary fringe, where relatively high concentrations of VOCs were observed during previous investigations, to achieve greater mass removal rates. Each DPE well contains a submersible pump and a pressure transducer to monitor groundwater levels in the well. Each DPE well is plumbed to separate liquid and vapor conveyances. Groundwater is conveyed to and treated by the GWCS. Each DPE well vault contains a sample port, high-level switch, flowmeter, high pressure switch, and associated isolation and check valves. A listing of the DPE wells is provided in **Table 3-1** and their locations are shown on **Figure 2-1**. As shown in the Record Drawings, some DPE wells that are contributing to the OU-1 remedial action is physically connected to the AOC SVE system. While soil vapors from these DPE wells are conveyed to the AOC SVE system, extracted groundwater is conveyed to the GWCS. The OM&M of the GWCS and AOC SVE system is covered in separate, respective Manuals.[6]

3.1.1.3 Vapor Monitoring Probes

The purpose of the VMPs is to measure the effectiveness of the vapor extraction in the subsurface. The top of casing for each probe is sealed with a well plug and 1/4-inch diameter ball valve, which are accessible from each VMP well box. The locations of the VMPs are shown in **Figures 2-2, 3-1, and 3-2**. A listing of all currently monitored VMPs is included in **Table 3-2**.

3.1.2 Treatment System Components

The treatment system includes the following major groups of components:

- SVE piping conveyance and manifold.
- SVE Blower Skid (Selleco VES 1000) including moisture separator, PD blower, heat exchanger, condensate transfer pump, and control panel. The skid was supplied by JHA Environmental, Inc. (JHA).
- Two vapor phase GAC vessels with capacities of 4,000 pounds and which were custom manufactured by RF2 Group, LLC.

---

[5] As described in the OU-1 On-Site Soil and OU-3 Indoor Air Removal Action Document Clarification letter sent to USEPA on November 20, 2017 (de maximis 2017), this document is being revised. Modifications to these documents are consistent with recent discussions with USEPA.

[6] As described in the OU-1 On-Site Soil and OU-3 Indoor Air Removal Action Document Clarification letter sent to USEPA on November 20, 2017 (de maximis 2017), these documents are being revised. Modifications to these documents are consistent with recent discussions with USEPA.

The locations of underground piping and treatment compounds are shown on Drawing C-3, the equipment layout is shown on M-1, and the electrical plan and details are shown in the electrical drawings, all of which are presented in **Appendix C**. The treatment system is described in detail in the following subsections.

3.1.2.1 Piping Conveyance and Manifold

All underground piping laterals from VEWs are constructed from Schedule 40 polyvinyl chloride (PVC) pipe. The conveyance includes a mixture of various piping sizes, all of which are detailed in Drawings C-3, C-4, C-5, and I-4 in **Appendix C**.

All conveyance piping daylights inside a 6-foot high chain-link fenced enclosure before manifolding into a common 8-inch diameter Schedule 40 PVC header. There are eight, 2-inch diameter PVC spare laterals set aside for potential future use, and five of the eight have been connected to the manifold. This manifold layout is shown on Drawings M-1 and I-4 in **Appendix C**. Each piping lateral includes the following:

- A 2-inch or 3-inch diameter Schedule 80 PVC ball valve for flow control;
- A 1/4-inch diameter port for flow and temperature measurement;
- A vacuum gauge; and
- A sample port.

Instrumentation is installed on the inlet piping at the manifold to facilitate flow measurements for process monitoring. Key components include the following:

- Dwyer Series DS-300 flow sensor
- Dwyer Series 2000 Magnehelic gauge

3.1.2.2 Moisture Separator

A moisture separator, also known as a "knockout tank" or vapor-liquid separator (VLS), supplied by JHA, is included on the blower skid. The separator removes moisture and condensate from the influent vapor stream. The VLS is equipped with a small discharge pump, operated by level switches, that is used to pump out condensate. Condensate is conveyed to the GWCS for treatment. Key components of the VLS include the following:

- A 100-gallon capacity steel tank with interior rust-inhibitive coating, with an 8-inch diameter inlet and outlet 150-pound flange.
- A 2 horsepower (hp) centrifugal pump, Goulds Pump model NPE, manufactured by ITT Corporation, to transfer the condensate to the GWCS. The pump is equipped with a Hand/Off/Auto (HOA) switch. The HOA switch is typically set to the "Off" position during routine operation since the quantity of condensate has been consistently observed to be minimal.

- Level switch low (LSL) and level switch high (LSH) may be used to automate pump operation. These switches will not control pump operation unless the HOA switch is set to AUTO.
- Level switch high-high (LSHH) will shut down the system in the event of a high condensate level in the tank, regardless of the HOA switch setting.

The condensate transfer line is installed above ground. All piping and fittings from the VLS to the GWCS compound are 2-inch diameter, schedule 80 PVC. Once the transfer line reaches the GWCS compound, it becomes 1 ½ –inch diameter flexible hose with a cam-lock fitting and tee connection to the influent line. Drawing I-3 in **Appendix C** presents additional detail.

Typically, the condensate transfer pump is used to drain the tank and the condensate is conveyed to the GWCS. Alternatively, the condensate tank may be drained through the threaded drain valve located at the bottom of the tank. With this method, operators may use a hose to transfer condensate to a drum. Depending on the condensate level in the tank, operators may connect the hose to a pump or allow the tank to drain by gravity.

Since the total VOC condensate storage volume is less than the 251-gallon limit per SCAQMD Rule 219 (Section M.9), no additional substantive SCAQMD requirements are applicable.

3.1.2.3 Blower and Silencer

A PD blower is installed on the skid to provide the required vacuum for SVE. The blower was supplied by JHA. Additional information on the blower skid and all its components is contained in the manufacturer-provided documentation located in **Appendix E.** Key components include the following:

- The Solleco 1000 VES-M321 PD blower has 60-hp Leeson motor, which is rated to provide 1,800 revolutions per minute (RPM) when operating at a full speed of 60 hertz (Hz). The blower is capable of operating at a flowrate of 1,280 standard cubic feet per minute (SCFM) at 8 inches of mercury. The blower skid has two 8-inch flanged connections.
- The blower motor is controlled by an ABB variable frequency drive (VFD), model number ACS550-U1-097A-4, serial number 2162306068, which is rated for 60-hp, heavy-duty motors.
- Silencer model #D-32, manufactured by Stoddard Silencers.

3.1.2.4 Heat Exchanger

A heat exchanger is installed to cool the process air downstream of the blower discharge prior to GAC treatment. The air-to-air heat exchanger is rated to treat influent air, with a temperature of 180 degrees Fahrenheit (deg F) and relative humidity of 20%, to a temperature of 113 deg F (i.e. below 145 deg F, per the HRA in **Appendix D**), given an outside ambient temperature of 98 deg F.

Key components and characteristics associated with the heat exchanger include the following:

- An air-to-air heat exchanger, Model # AA-1000 (part number 34323, serial number 0505-B9350) manufactured by Xchanger Inc. The heat exchanger is connected to a 1-hp Leeson

motor, model number C6T17FB151B, which is rated for 1760 RPM when operating at a full-speed of 60-Hz.

- A VFD and a single thermocouple are utilized to automate the operation of the heat exchanger. A second thermocouple is installed but is not in use. The VFD is manufactured by ABB and is model number ACS550-U1-097A-4. Together, these instruments will turn on the heat exchanger when the influent process vapor temperature reaches 105 deg F and will increase the heat exchanger motor to full speed to maintain a process vapor discharge temperature of 105 deg F.
- A Honeywell temperature controller, model number UDC2500. High temperature shutdown is triggered when the temperature at the discharge of the heat exchanger reaches 140 deg F. The blower will be shut down and a call out alarm will occur.
- Materials of construction: carbon steel housing, copper tubes, and aluminum fins.

3.1.2.5 Granular Activated Carbon

Two vapor-phase GAC vessels, arranged in series, are installed to treat the vapors prior to discharge to the atmosphere. The vessels are arranged in series such that one is the "lead" vessel (located immediately downstream of the heat exchanger), also referred to as "primary," and the other is the "lag" vessel (located immediately downstream of the lead GAC), also referred to as "secondary."

Key components include the following:

- Two vapor phase GAC vessels. These 4,000-pound vessels were custom manufactured by RF2 Group, LLC.
- 4x8 mesh reactivated GAC media is provided by Evoqua Water Technologies.

Pressure gauges and sample ports are located at the inlet of the primary GAC, between the primary and secondary GAC vessels, and at the exhaust of the secondary GAC.

Flow instruments are installed upstream of the primary GAC vessel to facilitate flow measurements for process monitoring and air permit requirements. Key components for each flow instrument include the following:

- Dwyer Series DS-300 flow sensor
- Dwyer Series 2000 Magnehelic gauge

3.1.2.6 Effluent Stack

The treated vapor is discharged to atmosphere from a 6-inch diameter, 15-foot high stack and will be monitored in accordance with the SCAQMD substantive compliance conditions (as described in the HRA, presented in **Appendix D**).

3.1.2.7 Control Panel

The equipment on the OU-1 SVE blower skid is controlled and automated within the main control panel. The control panel houses VFDs for the blower and heat exchanger, circuit breakers, fuses, a 480- to 120-volt stepdown transformer for 120-volt loads, a starter for the VLS discharge pump, power wires, control relays, instrumentation cables, an autodialer, and other smaller electrical components. Key components include the following:

- Rated for 480-volt, 3-phase power with a 150-Amp main fuse disconnect.
- Three feet wide by four feet tall NEMA 4 Enclosure.
- Runtime meter for the SVE blower.
- Limit controller by Honeywell Process Solutions, model UDC 2500, with programmable setpoint for the temperature element on the process piping upstream of the primary GAC.
- Limit controller by WEST™ brand, model 6700+, with programmable temperature setpoints to control the VFD for the heat exchanger.
- Limit controller by WEST™ brand, model 6700+, with programmable setpoints for the flow element on the process piping upstream of the blower.
- Emergency Stop button.
- On/Off switches for the blower and heat exchanger (operated by VFDs).
- Green push button to start the blower and heat exchanger.
- HOA switch for the transfer pump.
- Green light indicating that the system is running within prescribed operational limits.
- Blue light indicating that the transfer pump is on.
- Red lights, each indicating one of the following faults has occurred: high GAC inlet temperature, high air flow into blower, low air flow into blower, and high liquid level in inlet moisture separator.
- Remote autodialer (see next section)

3.1.2.8 Remote Autodialer

The OU-1 SVE system is equipped with a Sensaphone autodialer, model SCD-1200-4GVZCD. This remote autodialer is located in the control panel and provided service by Verizon. The autodialer is programmed to call out and alert an operator upon high air flow/low air flow into the blower, high GAC inlet temperature, high liquid level in the moisture separator, and general power failure. In the event of an alarm, the autodialer will send out a voice message pertaining to the specific alarm condition to the phone numbers programmed into the unit. The system does not provide any means for remote operations.

3.1.3 Miscellaneous Utility, Instruments, and Components

3.1.3.1 SCE Electrical Service

Electrical power to the OU-1 SVE is provided via a 480/277-volt, 3-phase, 3-wire, 200-amp service from Southern California Edison (SCE) overhead transformers. An electrical meter records the electrical usage for the operation of the system. Power to the plant can be isolated by closing the 200-amp service-rated disconnect downstream of the meter.

3.1.3.2 Electrical Meter Main and Conduits

The meter main and main disconnect are located west of the main system skid. The conduit extending from the service entrance to other system components is shown in plain view on Drawing E-3 and schematically on Drawing E-4 (**Appendix C**).

3.2 OU-1 SVE System Operation

This section describes the detailed procedures related to startup and operation of the OU-1 SVE system.

3.2.1 System Setup Procedures

Before the initial system startup, the following step-by-step procedures were used to set up the OU-1 SVE system. Repeat the tasks listed in the various tables referenced in this section for troubleshooting, if needed. Repeat this section before start-up whenever extensive repairs or modifications have been made to the system. Prior to startup testing of individual system components following prolonged downtime or system modification, complete the administrative and safety verifications listed in **Table 3-3**.

3.2.1.1 VEWs and Piping Manifold

All VEW flow control and monitoring devices are located on the piping manifold inside the treatment compound. Each lateral on the influent manifold has a ball valve, sample port, and vacuum and flow measurement ports. Under normal operation, the valves may be adjusted based on system results to optimize flow to the wellfield as described in this Manual**.** Prior to operation, operators should perform the following:

- Prior to system startup, operators should verify that each VEW and DPE lateral retains its label at the manifold, and that the label is legible, so that it can be identified.
- Operators should also verify that all pressure gauges are functioning properly and that valves along the conveyance piping and influent manifold are in the correct operating position (e.g., sample ports are closed), and throttling valves (one on each line) can be opened and closed without difficulty.
- Vacuum gauges are used to monitor vacuum readings for each VEW. When the system is offline, the vacuum monitoring gauge should read "0" (zero vacuum) for each individual well. The vacuum gauges should be calibrated or replaced as necessary.
- Each flow monitoring port consists of a 1/4-inch-diameter, normally-plugged port for inserting a field instrument to monitor flow from each VEW. When the system is offline, the

field instrument (a thermal anemometer) should indicate that no flow (0 SCFM) is flowing from the VEW.

Please refer to Sections 4 and 5 for more information on sampling and monitoring procedures performed at the influent manifold.

3.2.1.2 SVE Blower Setup Procedures

As described in the earlier section, the SVE blower setup consists of a moisture separator (VLS) for inlet vapor, condensate transfer pump, PD blower, heat exchanger, control panel and piping for process interconnection, and wiring for power and communication. **Table 3-4** lists the operating positions and set-points needed to set up the blower and configure it for startup. The control panel (CP-1) is the main interface for operation of these blower skid components.

3.2.1.3 GAC Setup Procedures

Prior to initial system operation or startup following lengthy downtime or GAC replacement, confirm that new GAC media has been installed in both treatment vessels per manufacturers' specifications. Before operation or after a GAC changeout, one vessel must be designated as the lead (also referred to as "primary") and the other as the lag ("secondary") such that the vessels are arranged in series. Lead and lag vessel configuration can only be changed by physically connecting the flexible piping. Prior to starting the system, verify that the flexible piping is configured as shown in **Table 3-5** if vessel GAC-1 is to be the lead vessel or as shown in **Table 3-6** if vessel GAC-2 is to be the lead vessel.

3.2.2 System Startup Procedures

The OU-1 SVE system is designed to operate in automated mode. However, periodic adjustments and sampling are needed to optimize the performance of the system. Prior to system startup, verify that all switches in the control panel are in the appropriate operating condition.

3.2.2.1 Initial Startup

After all the necessary setup procedures have been performed, initial startup can begin as follows:

1. Verify main disconnect switch is ON.
2. Turn power ON at main control panel.
3. Check the EMERGENCY STOP button. Make sure the button is not latched in by pulling it to the OFF (out) position.
4. Visually inspect panel lights and temperature controller to make sure they all appear to be online.
5. Open dilution valve 100 percent.
6. Turn "Condensate Pump" switch to OFF position.
7. Turn "Heat Exchanger" switch to ON position.

8. Verify VEW butterfly throttling valves in the manifold are open.

9. Turn "Extraction Blower" switch to ON position, push the green start button, and adjust VFD to a low frequency (20 Hz) to keep flow low.

10. At this time the blower will start to energize; and vacuum and pressure gauges will start to register readings. The system will begin pulling vapors from the VEWs through the blower unit and pushing flow into the GAC vessels.

11. Close dilution valve (100 percent closed).

12. Slowly ramp up the blower to the desired/previous flowrate.

13. Verify that control set points have been adjusted to match current flow rate and process conditions (flow set points, heat exchanger set points, etc.).

14. Verify that all emergency shutdown conditions and associated alarms have been tested and are operating as intended.

3.2.3 System Operating Procedures

3.2.3.1 VEW and VMP Operating Parameters

VEWs must each be configured to perform relative the RAOs, as described in Section 4. Ball valves on the influent manifold may be adjusted to optimize VEW flow and/or vacuum influence at nearby VMPs. Once the system has equilibrated, which may require approximately 1 to 2 days, vacuums and flows may receive additional monitoring, and manifold ball valves adjusted accordingly. Any valve adjustments should be followed by monitoring to confirm the desired effect.

Desired VEW flow rates and VMP vacuum levels are operational parameters that are expected to change over time, as the system is optimized, as described in Sections 4 and 5 of this Manual. OPOG's Project Coordinator and/or Environmental Consultant will provide direction to the OM&M Contractor regarding changes to operational targets.

3.2.3.2 SVE Equipment Operating Parameters

Table 3-7 indicates overall targets for flow rate and vacuum for the system as a whole (all wells combined).

System uptime is one of the most important parameters for the SVE blower skid. It is critical that periodic maintenance and/or repair be performed to maintain the equipment so that uptime is maximized and maintained above the goal of 90 percent.

Since most routine system optimization is expected to be performed at the piping manifold, no process adjustment is expected to be typically necessary at the SVE blower skid. However, the overall vacuum and flow rate must be monitored at the blower skid to make sure the parameters do not exceed the requirements for substantive compliance with SCAQMD regulations, as described in **Appendix D**. All system operators must be familiar with the entirety of these requirements.

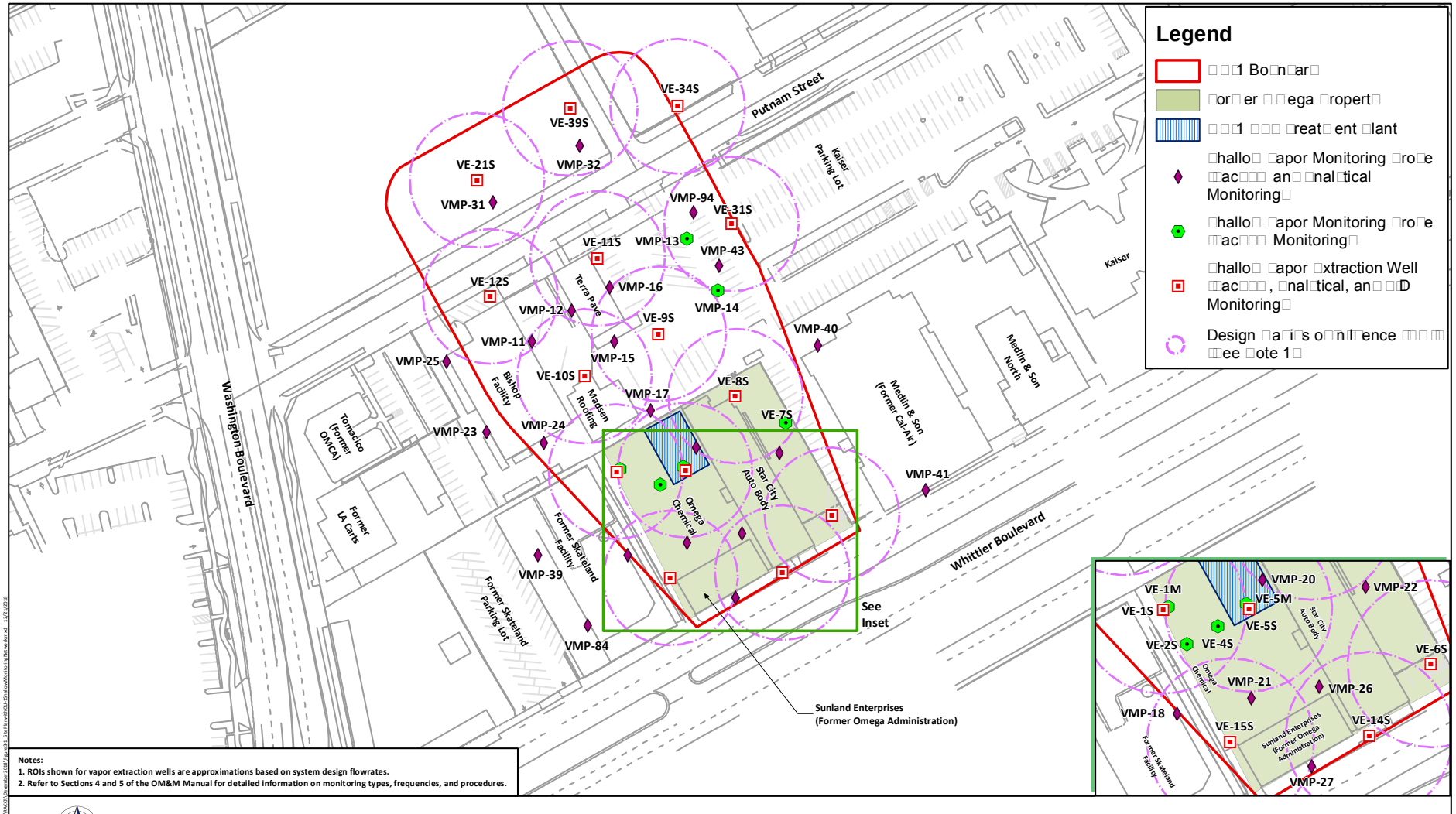

Legend
OU-1 Boundary
Former Omega Property
OU-1 SVE Treatment Plant
Shallow Vapor Monitoring Probe (Vacuum and Analytical Monitoring)
Shallow Vapor Monitoring Probe (Vacuum Monitoring)
Shallow Vapor Extraction Well (Vacuum, Analytical, and PID Monitoring)
Design Radius of Influence (ROI) (See Note 1)
Putnam Street
Washington Boulevard
Whittier Boulevard
Kaiser Parking Lot
Kaiser
Medlin & Son North
Medlin & Son (Former Cal-Air)
Terra Pave
Bishop Facility
Madsen Roofing
Tomacico (Former OMCA)
Former LA Carts
Former Skateland Facility
Former Skateland Parking Lot
Omega Chemical
Star City Auto Body
See Inset
Sunland Enterprises (Former Omega Administration)
VE-34S
VE-39S
VMP-32
VE-21S
VMP-31
VMP-94
VE-31S
VE-11S
VMP-13
VMP-43
VE-12S
VMP-16
VMP-14
VMP-12
VE-9S
VMP-11
VMP-15
VMP-40
VMP-25
VE-10S
VE-8S
VMP-17
VE-7S
VMP-23
VMP-24
VMP-41
VMP-39
VMP-84
VE-1M
VMP-20
VMP-22
VE-1S
VE-5M
VE-5S
VE-2S
VE-4S
VE-6S
VMP-21
VMP-26
VMP-18
VE-15S
VE-14S
VMP-27

Notes:
1. ROIs shown for vapor extraction wells are approximations based on system design flowrates.
2. Refer to Sections 4 and 5 of the OM&M Manual for detailed information on monitoring types, frequencies, and procedures.

120 0 120
Feet

OU-1 SVE Operations, Maintenance, and Monitoring
Manual prepared by CDM Smith in December 2018

Operable Unit 1 (OU-1) On-site Soil Remedy
Omega Chemical Superfund Site, Whittier California

Site Plan with OU-1 Shallow Monitoring Network
Figure 3-1

CDM Smith

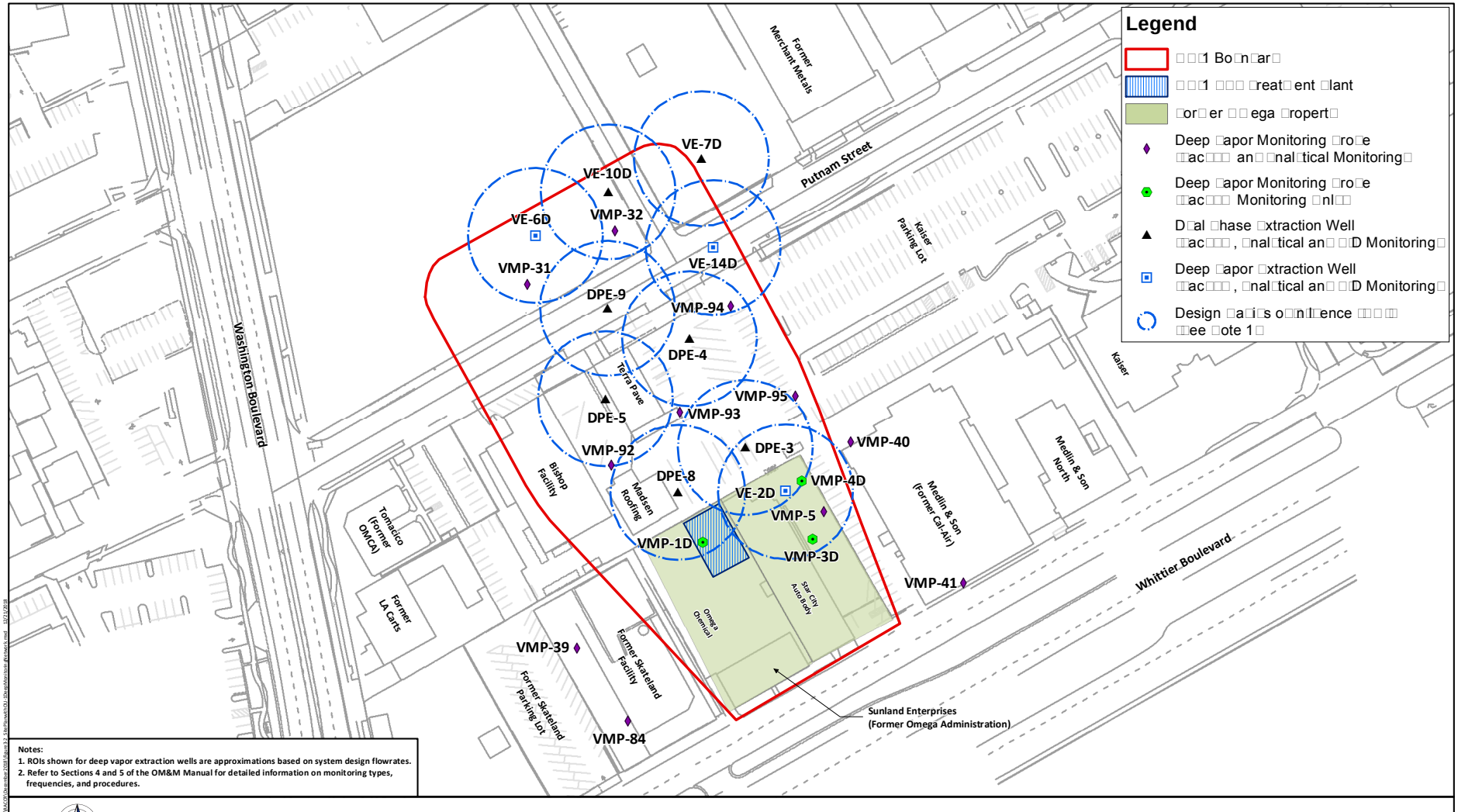

Notes:
1. ROIs shown for deep vapor extraction wells are approximations based on system design flowrates.
2. Refer to Sections 4 and 5 of the OM&M Manual for detailed information on monitoring types, frequencies, and procedures.

120 0 120
Feet

OU-1 SVE Operations, Maintenance, and Monitoring Manual prepared by CDM Smith in December 2018

Operable Unit 1 (OU-1) On-site Soil Remedy
Omega Chemical Superfund Site, Whittier California

Site Plan with OU-1 Deep Monitoring Network
Figure 3-2

CDM Smith

3.2.3.3 Routine Operation

During routine operation, it is important to verify that the system is operating and performing as intended. During each visit to the treatment system compound, verify that the following items are completed:

- Review the HASP and conduct a tail-gate meeting (**Appendix A**).
- Prepare the necessary monitoring forms and paperwork (**Appendix F**).
- Review the specific applicable procedures in this Manual and the SOPs (**Appendix B**).
- Perform VEW and system monitoring and record the data on appropriate forms located in **Appendix F** and according to Sections 4 and 5 of this Manual.
- Perform periodic maintenance and repairs as described in Section 3.2.3.5.
- Record monitoring data, equipment maintenance, and instrument calibration activities on appropriate forms included in **Appendix F**.
- Secure the treatment compound before exiting as described in Section 2.
- Submit all operational data per established internal protocols to the Project Coordinator and/or upload to the data management portal/database.

3.2.3.4 Alarm Conditions

The system will shut down and trigger an autodialer notification if any of the following conditions occur:

- Channel 1: High-High condensate level is present in the moisture separator;
- Channel 2: High vapor flowrate through the blower (i.e. greater than 1280 SCFM);
- Channel 3: High heat exchanger discharge temperature (i.e. greater than 140 deg F. vapor influent to the GAC);
- Channel 4: Blower shutdown (e.g. inadvertent shutdown of the blower due to thermal overload, power surge; or depression of the emergency stop button).

Table 3-8 presents the proper system and operator response for all alarms, which should be tested annually, at a minimum. See SOP 108 in **Appendix B** for alarm testing procedures. Any unplanned system downtime in excess of 24 hours will be reported to USEPA by OPOG, along with planned corrective action.

3.2.3.5 Periodic Maintenance

It is important to perform periodic maintenance and cleaning of the equipment according to the manufacturer's instructions presented in **Appendix E**, and as prescribed in **Table 3-9**.

Table 3-1. OU-1 VEWs and DPE Wells

Extraction Well ID	SVE Treatment System[1]	Diameter (in)	Total Depth (ft bgs)	Average Flow[2] (scfm)	Average Vacuum[3] (inches of water column gauge)	Screened Interval (ft bgs)		Coordinates [4]	
						Top	Bottom	Northing	Easting
Shallow Zone VEWs									
VE-1S	OU-1	4	23	23.8	19.7	12.5	22.5	1811157.14	6548381.19
VE-5S	OU-1	4	23	38.5	47.3	12	22	1811229.21	6548380.51
VE-6S	OU-1	4	30	86.1	21.7	10	30	1811381.18	6548426.45
VE-8S	OU-1	4	30	137.4	25.7	10	30	1811271.82	6548300.72
VE-9S	OU-1	4	30	47.7	53.2	10	30	1811200.74	6548238.16
VE-10S	OU-1	4	30	43.6	51.0	10	30	1811123.89	6548282.0
VE-11S	OU-1	4	30	95.3	20.7	10	30	1811137.65	6548159.8
VE-12S	OU-1	4	30	75.7	49.3	10	30	1811026.18	6548199.2
VE-14S	OU-1	4	30	25.0	9.3	10	30	1811329.61	6548486.5
VE-15S	OU-1	4	30	32.1	32.0	10	30	1811213.08	6548492.0
VE-21S	AOC	4	30	64.5	47.3	10	30	1811015.6	6548083.5
VE-31S	AOC	4	30	80.4	20.7	10	30	1811276.9	6548136.3
VE-34S	AOC	4	30	155.0	43.8	10	30	1811214.6	6548013.3
VE-39S	OU-1	4	30	153.0	46.5	10	30	1811109.0	6548003.9
Deep Zone VEWs									
VE-2D	OU-1	4	70.5	44.8	41.3	35	70	1811263.48	6548403.6
VE-6D	AOC	4	101.5	411.7	36.3	40	100	1811216.3	6548052.5
VE-14D	OU-1	4	101.5	179.8	49.7	40	100	1811224.3	6548065.2
Deep Zone DPE Wells									
VE-7D	AOC	4	101.5	81.5	30.0	40	100	1811276.6	6548123.9
VE-10D	AOC	4	101.5	169.6	45.3	40	100	1811107.5	6547995.0
DPE-3	OU-1	6	101.5	116.0	50.7	40	100	1811249.72	6548260.1
DPE-4	OU-1	6	101.5	77.5	23.7	40	100	1811191.72	6548147.3
DPE-5	OU-1	6	101.5	79.1	39.7	40	100	1811104.56	6548209.4
DPE-8	OU-1	6	101.5	107.7	22.7	40	100	1811179.92	6548306.5
DPE-9	OU-1	6	101.5	113.8	21.0	40	100	1811106.68	6548115.5

Notes:

[1] **Vapor extraction wells VE-21S, VE-31S, VE-34S, VE-39S and VE-6D and dual phase extraction wells VE-7D and VE-10D are connected to the AOC SVE system for vapor treatment but are OU-1 wells, located within OU-1, and removing mass from OU-1.**

[2] **Average flows were calculated based on 3 most recent measurements from between November 2017 and March 2018.**

[3] **Average vacuums were calculated based on 3 most recent measurements from between February and March 2018.**

[4] **California State Plane NAD 83 Zone V (ft)**

ft bgs - feet below ground surface
DPE - dual phase extraction
Hg - mercury
in - inches
in. H_2O - inches of water
scfm - standard cubic feet per minute
VEW - vapor extraction well

Table 3-2. OU-1 Vapor Monitoring Probes

VMP ID[1]	Well Diameter (in)	VMP Depth (ft bgs)	Screened Interval [3,4]	Coordinates [2]	
				Northing	Easting
VE-1M	4	36.5	26 - 36 ft bgs	1811161.49	6548378.72
VE-2S	4	23	12 - 22 ft bgs	1811177.04	6548410.14
VE-4S	4	22.5	12 - 22 ft bgs	1811203.12	6548395.33
VE-5M	4	36.5	26 - 36 ft bgs	1811226.74	6548376.16
VE-7S	4	30	10 - 30 ft bgs	1811323.03	6548303.59
VMP-1D	4	70	35 - 70 ft bgs	1811184.536	6548381.522
VMP-3D	4	70	35 - 70 ft bgs	1811196.556	6548416.881
VMP-4D	4	70	35 - 70 ft bgs	1811389.65	6548422.241
VMP-11	2	30	10 - 30 ft bgs	1811069.291	6548246.268
VMP-12	2	31.5	10 - 30 ft bgs	1811110.479	6548214.358
VMP-13	2	30	10 - 30 ft bgs	1811230.781	6548138.487
VMP-14	2	31.5	10 - 30 ft bgs	1811262.579	6548192.806
VMP-15	2	31.5	10 - 30 ft bgs	1811155.38	6548246.458
VMP-16	2	31.5	10 - 30 ft bgs	1811150.281	6548189.603
VMP-17	2	31.5	10 - 30 ft bgs	1811192.92	6548318.214
VMP-18	2	30	10 - 30 ft bgs	1811168.73	6548468.446
VMP-20	2	31.5	10 - 30 ft bgs	1811236.379	6548359.167
VMP-21	2	31.5	10 - 30 ft bgs	1811230.581	6548455.222
VMP-22	2	30	10 - 30 ft bgs	1811326.689	6548362.117
VMP-23	2	30	10 - 30 ft bgs	1811022.57	6548340.032
VMP-24	2	31.5	10 - 30 ft bgs	1811081.891	6548351.701
VMP-25	2	31.5	10 - 30 ft bgs	1810980.711	6548266.817
VMP-26	4	30.5	10 - 30 ft bgs	1811280.915	6548438.658
VMP-27	4	30	10 - 30 ft bgs	1811275.185	6548508.273
VMP-31	0.25	6	6 in.	1811028.949	6548101.163
	0.25	12	6 in.		
	0.25	24	6 in.		
	1	55	50 - 55 ft bgs		
	0.25	40	6 in.		
	0.25	60	6 in.		
	0.25	70	6 in.		

VMP ID[1]	Well Diameter (in)	VMP Depth (ft bgs)	Screened Interval [3,4]	Coordinates [2]	
				Northing	Easting
VMP-32	0.25	6	6 in.	1811119.145	6548043.287
	0.25	12	6 in.		
	0.25	24	6 in.		
	1	55	50 - 55 ft bgs		
	0.25	40	6 in.		
	0.25	60	6 in.		
	0.25	70	6 in.		
VMP-39	0.25	6	6 in.	1811075.549	6548468.833
	0.25	12	6 in.		
	0.25	24	6 in.		
	1	55	50 - 55 ft bgs		
VMP-40	0.25	6	6 in.	1811366.564	6548250.101
	0.25	12	6 in.		
	0.25	24	6 in.		
	1	55	50 - 55 ft bgs		
	0.25	70	6 in.		
VMP-41	0.25	6	6 in.	1811479.21	6548400.807
	0.25	12	6 in.		
	0.25	24	6 in.		
	1	55	50 - 55 ft bgs		
VMP-43	0.25	6	6 in.	1811263.805	6548167.503
	0.25	12	6 in.		
	0.25	24	6 in.		
	1	55	50 - 55 ft bgs		
VMP-84	0.25	6	6 in.	1811127.45	6548542.17
	0.25	12	6 in.		
	0.25	24	6 in.		
	0.25	40	6 in.		
	0.25	50	6 in.		
	0.25	60	6 in.		
	0.25	69.5	6 in.		
VMP-92	0.25	51.5	6 in.	1811110.78	6548278.62
	0.25	62	6 in.		
	0.25	68.5	6 in.		

VMP ID[1]	Well Diameter (in)	VMP Depth (ft bgs)	Screened Interval [3,4]	Coordinates [2]	
				Northing	Easting
VMP-93	0.25	50	6 in.	1811182.17	6548223.71
	0.25	60	6 in.		
	0.25	69.5	6 in.		
VMP-94	0.25	6	6 in.	1811237.14	6548111.95
	0.25	11	6 in.		
	0.25	24	6 in.		
	0.25	40	6 in.		
	0.25	50	6 in.		
	0.25	60	6 in.		
	0.25	69.5	6 in.		
VMP-95	0.25	51	6 in.	1811301.78	6548206.41
	0.25	61	6 in.		
	0.25	69.5	6 in.		

Notes:

[1] **Several previous vapor extraction wells (from pilot testing activities) are utilized as vapor monitoring probes, hence the inconsistency in nomenclature ("VE-X" and "VMP-X").**

[2] **Coordinates shown are for shallow probe/boring where there is more than one boring.**

[3] **VMP-31 through VMP-95 have 6-inch long stainless steel probes located at the depths indicated. Probes installed in 1 to 3 borings per location.**

[4] **Several locations completed with 5-foot long screened sections installed 50 - 55 feet bgs vs. 6-inch long probes at 50 feet bgs.**

ft bgs - feet below ground surface
in - inches
VMP - Vapor monitoring probe

Table 3-3. Administrative and Safety Checklist

Checklist Item Description
Do all Personnel know where to find the Health and Safety Plan, MSDS and O&M Manual?
Are a map to the nearest hospital and directions posted in visible area?
Is the first aid kit readily available and complete?
Is the mounted Fire extinguisher within its expiration date?
Is the Eye wash station functioning properly?
Is the list of emergency contacts posted and up-to-date?
Verify lockout/tagout kit is posted on control panel.

Table 3-4. Blower Setup

Equipment	Description	Offline Position	Operating Position
Dilution Air Butterfly Valve	Used for diluting the vapor concentration prior to GAC treatment	NC	NO during startup then NC[*1]
Mist Eliminator	A stainless steel mesh to trap the moisture. Located inside the top of the Moisture Separator.	NA	NA
Vacuum Relief Valve	Used for relieving the high vacuum condition	NC	NC
Blower	On/Off switch	OFF	ON
Condensate Pump HOA	Hand-Off-Auto switch	OFF	OFF (Manual operation only)
Honeywell Temperature Controller	Measures the temperature probe on the discharge of the heat exchanger	NA	High temperature set-point at 140 deg F
WEST™brand Controller	Measures the flow on the inlet side of the blower	NA	High flow set-point of 1,280 cfm
Heat Exchanger	On/Off switch	OFF	ON
WEST™brand Controller	Measures the temperature probe on the discharge of the heat exchanger	NA	Preset to operate heat exchanger VFD between 100 deg F and 140 deg F

Notes

[*1] = Normally Closed but open only as needed.

Table 3-5. GAC Piping Configuration No. 1

(GAC-1 as Lead and GAC-2 as Lag)

Equipment / location	From	To
Influent or GAC inlet	Outlet of the Blower Skid	Inlet of Lead GAC-1
Midpoint of Lead and Lag vessels	Outlet of Lead GAC-1	Inlet of Lag GAC-2
Effluent (Exhaust)	Outlet of the Lag GAC-2	Stack

Table 3-6. GAC Piping Configuration No. 2

(GAC-2 as Lead and GAC-1 as Lag)

Equipment / location	From	To
Influent or GAC inlet	Outlet of the Blower Skid	Inlet of Lead GAC-2
Midpoint of Lead and Lag vessels	Outlet of Lead GAC-2	Inlet of Lag GAC-1
Effluent (Exhaust)	Outlet of the Lag GAC-1	Stack

Table 3-7. Overall System Flow Rate and Vacuum

Tag / Equipment	Average Operating Point
FM-COMBINEDWELLS (Combined wells flow rate at the piping manifold)	1,200 scfm
VI-COMBINED WELLS (Combined wells vacuum at the piping manifold)	3.5 in Hg

Table 3-8. Treatment System Alarms

Alarm Description	System Response	Operator response
High-high condensate level in moisture separator	Shut down	Visit the system; drain moisture separator; restart system
High heat exchanger discharge temperature	Shut down	Visit the system; determine and address cause of alarm; restart system
High blower flowrate	Shut down	Visit the system; determine and address cause of alarm; restart system
Blower shutdown	Shut down	Visit the system; determine and address cause of alarm; restart system

Table 3-9. Treatment System Inspection and Maintenance

Equipment	Maintenance Task	Frequency / Remarks
General	Visually inspect to verify that all equipment is in working order	Weekly
	Ensure proper operation of all level switches	Monthly
	Check cooling fans for equipment container and control panels	Monthly
	Check all alarms for proper functionality and auto-dialer call-out	Annually (Refer to SOP 108 Alarm Testing, **Appendix D**)
	Perform leak inspection	Prior to Startup and Annually (Refer to SOP 270 Leak Inspection, **Appendix D)**
Motors	Lubricate motor fittings	Monthly
	See **Appendix D** for additional tasks	As needed
Heat Exchanger	Check underneath heat exchanger and check fan operation, sure enclosure is clean/clear	Monthly
	See **Appendix D** for additional tasks	As needed
Blower	Monitor Inline Filter Differential Pressure	Weekly; Replace as needed
	Check Blower Oil Levels	Weekly; Clean/replace as needed
	Inspect Belts for Proper Tension, Noise or Wear	Weekly; Replace as needed
	Inspect Bolts for Tightness and Wear	Weekly; Replace as needed
	Replace Dilution Filter	Quarterly
	Drain and Replace Oil	Refer to manufacturer recommendations, **Appendix C**
	Lubricate Motor Bearings, Non Drive Side	Refer to manufacturer recommendations, **Appendix C**
	Lubricate Motor Bearings, Drive Side	Refer to manufacturer recommendations, **Appendix C**
	Change air filter in the dilution valve	Refer to manufacturer recommendations, **Appendix C**
	Check cooling fan on blower enclosure	Monthly
	Check panel wire connections	Monthly
GAC Vessels	Drain condensate build up in primary carbon vessel	Weekly
	Changeout the carbon media in the GAC vessels	As necessary, See HRA in **Appendix E**
Vapor/Liquid Separator	Check level switches	Monthly
	Drain the VLS manually using condensate pump when the condensate tank is half full	As necessary

Section 4
Performance Monitoring

4.1 Remedial Action Objectives

The RAOs for the Full Scale On-Site (OU-1) Soil Remedy, as presented in the Record of Decision (ROD), are as follows (USEPA 2008):

1. Reduce or eliminate the vapor intrusion risk associated with volatile organic compounds (VOC) vapors in OU-1 contaminated soils.
2. Reduce or eliminate the risk associated with direct exposure to, contact with, and/or ingestion of OU-1 contaminated soils.
3. Reduce or eliminate contamination migration to groundwater to levels that protect the OU-1 groundwater resource.

Numerical compliance levels were established in the ROD for RAOs #1 and #2. These were selected from site-specific preliminary remediation goals (SSPRGs) that had been calculated in a 2007 Human Health Risk Assessment (HHRA) conducted for OU-1 (CDM 2007). The SSPRGs selected in the ROD assumed a future residential exposure within OU-1. However, since OU-1 contains no residential structures, and there are no known plans in place for OU-1 to be developed for residential use, OPOG believes that the SSPRGs are overly conservative for indoor air (RAO #1), and that the Region 9 USEPA Industrial Regional Screening Levels (RSLs) are the appropriate compliance levels for indoor air.

For RAO #2, the SSPRGs for soil gas are likewise conservative for the planned use of the property, but are presented below as originally calculated in the HHRA, and as adopted by the ROD as cleanup levels for shallow soil gas (0 to 30 feet bgs).

Shallow soil gas:

- PCE = 470 micrograms per cubic meter (ug/m3)
- TCE = 1,300 ug/m3

With regard to RAO #3, USEPA has acknowledged that the nature and extent of contamination in the source zone complicates compliance with RAO #3 as written in the ROD. VOC mass in the deep vadose zone continues to be removed by the implemented remedy.

As has been described in the Quarterly Performance Evaluation Reports (QPERs), and the Remedial Action Construction Complete Report (RACCR), performance data collected to date indicate that the OU-1 SVE System has been compliant with the RAOs, and has operated consistently with a high percentage of system up-time, and is therefore operational and functional (de maximis, inc. [de maximis] 2018 and CDM Smith 2018).

All monitoring and sampling activities described below are conducted to align with these RAOs. Additional details on these activities, including information on data quality objectives (DQOs), sample identification, sampling procedures, analytical methods, data management, record keeping, data validation, and other topics are presented in the SAP contained in **Appendix G**. Sampling equipment maintenance, calibration and frequency, and decontamination procedures are outlined in Section 3.2 of the SAP (**Appendix G**). Applicable quality control measures are followed as per Section 3.5 of the SAP (**Appendix G**).

4.2 Indoor and Ambient Air Monitoring

Indoor air quality samples will continue to be collected to verify that VOC concentrations in indoor air are below Region 9 RSLs for the occupied buildings within OU-1, in alignment with RAO #1. Ambient air samples will be used to characterize air quality outside specified facilities.

None of the buildings within OU-1 are currently utilized as residences; all occupants are commercial/industrial businesses. Indoor air data are collected from within occupied OU-1 buildings to show that concentrations of PCE and TCE in indoor air are below acceptable risk levels. **Figure 4-1** illustrates the buildings currently occupied in the OU-1 indoor air monitoring program (de maximis 2018). The occupancy status of existing buildings is verified routinely and will continue to be presented in the QPERs. Indoor air monitoring will be adjusted as needed, with approval from EPA, based on changes to building occupancy and/or monitoring results.

Table 4-1 lists the specific monitoring locations and the type and frequency of monitoring to be performed at each location.

4.3 Analytical Soil Gas Data

VMPs will continue to be sampled to evaluate performance relative to the RAOs, the quantitative cleanup levels for the shallow vadose zone, as described in Section 4.1, and to determine that soil gas concentrations in the deep zone are declining over time.

Table 4-2 lists the specific VMPs where monitoring will be conducted, and the type of monitoring to be performed at each location. Samples will be collected using a Summa Canister. The procedures for sampling are detailed in SOP 104, found in **Appendix B.** Leak testing shall be performed on 100% of VMPs during all sampling events. Additionally, shut-in testing shall be performed on 100% of VMP, VEW and DPE well monitoring locations during all sampling events. Procedures and methods for shut-in and leak testing can be found in SOP 107, located in **Appendix B**.

4.4 Data Analysis and Reporting

The data described above will continue to be used to assess the efficiency of the system versus the RAOs listed in Section 4.1, and to identify the need for any optimization, maintenance, or other modification to any part of the system.

All collected performance monitoring data will be reported to USEPA in the QPERs. If OPOG collects additional data from OU-1 not specified herein, all such data will also be provided as part of the ongoing quarterly project reporting.

OU-1 SVE Operations, Maintenance, and Monitoring Manual prepared by CDM Smith in December 2018

Operable Unit 1 (OU-1) On-site Soil Remedy
Omega Chemical Superfund Site, Whittier California

Indoor and Ambient Air Quality Monitoring Site Map
Figure 4-1

CDM Smith

Table 4-1: Indoor and Ambient Air Quality Monitoring

Buildings within the OU-1 Boundary[1]	Monitoring Location ID	Monitoring Type and Frequency[2]	
		Analytical (VOCs, TO-15)	
		Semi-Annually	Annually
Terra Pave	TP1	X	
	TP2	X	
	TP3	X	
Star City Auto Body	SC1		X
	SC2		X
	SC3		X
Madsen Roofing	MR1		X
Bishop Co.	B1	X	
	B2	X	
	B3	X	
Ambient Air	AA1	X	

Notes:

[1] The scope of indoor and ambient air quality monitoring is subject to revision as building occupancy changes.

[2] Unless USEPA approves otherwise, the buildings in this table should be sampled in December or January of each year.

VOCs - Volatile Organic Compounds

TO-15 - Toxic Organics-15 (USEPA analytical method)

Table 4-2: OU-1 VMP Monitoring

Monitoring Location		Monitoring Type and Frequency			
		Vacuum /Pressure (in water column gauge)		Analytical (VOCs, TO-15)	
VMP ID[2]	Depth (ft bgs)	Quarterly	Annually	Semi-Annually	Annually
VE-1M	36	X			
VE-2S	22	X			
VE-4S	22	X			
VE-5M	36	X			
VE-7S	30	X			
VMP-1D	70	X			
VMP-3D	70	X			
VMP-4D	70	X			
VMP-5	45	X		X	
VMP-11	30	X		X	
VMP-12	30	X		X	
VMP-13	30	X			
VMP-14	30	X			
VMP-15	30	X		X	
VMP-16	30	X		X	
VMP-17	30	X		X	
VMP-18	30	X		X	
VMP-20	30	X		X	
VMP-21	30	X		X	
VMP-22	30	X		X	
VMP-23	30	X			X
VMP-24	30	X		X	
VMP-25	30	X			X
VMP-26	30	X		X	
VMP-27	30	X		X	

Monitoring Location		Monitoring Type and Frequency			
		Vacuum /Pressure (in water column gauge)		Analytical (VOCs, TO-15)	
VMP ID[2]	Depth (ft bgs)	Quarterly	Annually	Semi-Annually	Annually
VMP-31	6	X			
	12	X			
	24	X		X	
	40	X			
	55	X			
	60	X			
	70	X		X	
VMP-32	6	X			
	12	X			
	24	X		X	
	40	X			
	55	X			
	60	X		X	
	70	X			
VMP-39	6		X		X
	12		X		X
	24		X		X
	55		X		X
VMP-40	6		X		X
	12		X		X
	24		X		X
	55		X		X
	70		X		
VMP-41	6		X		X
	12		X		X
	24		X		X
	55		X		X

Monitoring Location		Monitoring Type and Frequency			
		Vacuum /Pressure (in water column gauge)		Analytical (VOCs, TO-15)	
VMP ID[2]	Depth (ft bgs)	Quarterly	Annually	Semi-Annually	Annually
VMP-43	6	X			
	12	X			
	24	X		X	
VMP-84	6		X		X
	12		X		X
	24		X		X
	40		X		X
	50		X		X
	60		X		X
VMP-92	50	X			
	60	X			
	70	X		X	
VMP-93	50	X			
	60	X		X	
	70	X			
VMP-94	6	X			
	12	X			
	24	X		X	
	40	X			
	50	X			
	60	X		X	
	70	X			
VMP-95	50	X			
	60	X		X	
	70	X			

Notes:

[1] Vacuum monitoring frequency may be reduced at VMPs if building occupancy statuses change in the future.

[2] Several previous vapor extraction wells (from pilot testing activities) are utilized as vapor monitoring probes, hence the inconsistency in nomenclature (e.g. "VE-X" and "VMP-X").

ACFM - cubic feet per minute under actual conditions

ft bgs - feet below ground surface

PID - photoionization detector

SCFM - cubic feet per minute under standard conditions

Section 5
Operational Monitoring

In addition to the performance monitoring described in the previous section, additional monitoring of the OU-1 SVE system will be conducted to confirm the treated system effluent is in substantive compliance with SCAQMD requirements, and to operate and maintain the system efficiently and effectively. Similar to the previous section, additional details on these activities are presented in the SAP contained in **Appendix G**.

Monitoring of the various parameters will be performed according to the frequencies presented in **Table 5-1**. Please see SOP 370 (**Appendix B**) for photoionization detector (PID) calibration procedures. Sample collection procedures can be found in SOP 104, located in **Appendix B**. Sampling equipment maintenance, calibration and frequency, and decontamination procedures are outlined in Section 3.2 of the SAP (**Appendix G**). Applicable quality control measures will be followed as per Section 3.5 of the SAP (**Appendix G**).

5.1 SCAQMD System Monitoring

A permit to operate is not required from SCAQMD per CERCLA Section 121. The system's operational conditions and monitoring, as identified in the HRA (**Appendix D**), must be maintained to remain in substantive compliance with SCAQMD requirements. The GAC influent, midpoint, and effluent samples will continue to be collected, and field staff will analyze the total VOC concentrations in the inlet and outlet of the each GAC vessel using a PID to determine when GAC media replacement is required. If required, please see SOP 400 and 401 (**Appendix B**) for GAC profiling and changeout procedures, respectively. Temperature data will be collected to confirm compliance with the maximum allowable GAC influent temperature, and that the heat exchanger is functioning as required. System flow data will be collected to confirm that the system is not discharge vapors in excess of the maximum allowable flow for the system.

5.2 Operational Soil Gas Monitoring

Additional soil gas data are collected to evaluate the operation of the system. These data include the vacuum levels at VMPs to assess the distribution of vacuum in the subsurface, and flow, vacuum, and VOC concentrations from VEWs and DPE wells to assess mass removal and operational trends. These data complement the performance data and will be used to determine the need for system adjustments and optimizations.

Vacuum data are used to assess whether targeted areas are continuing to be influenced by SVE. Shallow vacuum data near or under occupied buildings can also indicate the potential for vapor intrusion. If vacuum is not measured in targeted locations, operational adjustments will be made as appropriate to achieve the desired conditions. For example, flow at the closest extraction well and/or other extraction wells may be increased, if appropriate.

Table 5-2 lists the specific VEWs and DPE wells where monitoring will be conducted, and the type of monitoring to be performed at each location. **Table 4-2** lists the specific VMPs where monitoring will be conducted, and the type of monitoring to be performed at each location.

5.3 Operational Monitoring and Inspection

Operators will inspect the system regularly and collect data to verify appropriate operation and condition of all equipment and infrastructure. These data include, but are not limited to the following:

- Vacuum/pressure readings at the influent manifold, blower suction, and blower discharge will be collected to evaluate the overall performance of the blower;
- Monitoring will be conducted to confirm that excessive moisture is not bypassing the vapor liquid separator (VLS) and/or being delivered to the GAC vessels. If data from the GAC influent indicate that excess moisture is present in the vapor stream (e.g. relative humidity is high or there is free moisture in sample ports), the configuration of the knockout tank (e.g., flow, knockout tank sizing) will be evaluated, and changes will be implemented as necessary.
- Temperature monitoring is automated to ensure the heat exchanger is lowering the temperature of the influent vapor to the GAC vessels, as designed. In the event of a heat exchanger failure and/or frequent system shutdowns due to high temperature, troubleshooting will be performed, and repair/replacement actions will be made as necessary.
- Overall system operational time, or "uptime," is monitored to demonstrate that the system is functioning properly and consistently.
- Preventative maintenance inspections of the equipment, and associated maintenance tasks are performed routinely to maintain operation of the system at optimal conditions. Tasks include routine cleaning of the air filter and heat exchanger and minor equipment repairs (e.g., tightening loose bolts, making lubrications, etc.). Operators evaluate the system for signs of wear and any significant change in the condition of the system from previous observations noted in the field forms. Spare parts are maintained on-site to facilitate prompt replacement, as needed and where appropriate, to maximize system uptime.

5.4 Field Forms and Log

Field forms have been developed to assist in collection of all necessary field data. The field forms provided in **Appendix F** are maintained in the project trailer and in digital format. These forms assist the operator in documenting the status of the system during visits to the treatment system compound. The forms are submitted to the Project Coordinator and Environmental Consultant for review and analysis, and data recorded on these forms are uploaded to a data management portal/database for future use.

Field forms included in **Appendix F** are:

- OU-1 SVE Monitoring Form

- VMP Monitoring Form
- Sample chain of custody (COC)
- Sample Collection Log
- Equipment Calibration Log

5.6 Data Analysis and Reporting

System data will continue to be analyzed to assess substantive compliance with SCAQMD requirements, and to confirm the system continues to operate effectively and efficiently. These data will be used to identify the need for any changes to system operations, maintenance activities, or other modification to any part of the system. Generally, the information collected will allow the OM&M Contractor to verify that system components are operating within their specifications and capabilities, and to take action if that is not the case or if action would improve system operation.

As with performance monitoring data, all other collected monitoring data will be reported to USEPA in the QPERs. If OPOG collects additional data from OU-1 not specified herein, all such data will also be provided as part of the ongoing quarterly project reporting or within a separate technical document, as appropriate.

Table 5-1: OU-1 SVE System Operational Monitoring

Monitoring Location	Monitoring Type and Frequency						
	% Run Time	VOCs (Analytical)	VOCs (PID)	Vacuum/Pressure (inches of water column gauge)	Flow Rate (SCFM / ACFM)	Temperature (°F)	Relative Humidity (%)
Overall System	Continuously						
Combined Influent			Weekly	Weekly	Continuously	Weekly	Weekly
Blower Discharge					Continuously	Continuously	
Lead GAC Vessel Influent		Monthly	Weekly	Weekly	Weekly	Continuously	Weekly
Between GAC Vessels (midpoint)		Monthly	Weekly	Weekly			
GAC Effluent		Monthly	Weekly	Weekly			

Notes:

°F - degrees Fahrenheit

% - percent

ACFM - cubic feet per minute under actual conditions

PID - photoionization detector

SCFM - cubic feet per minute under standard conditions

VOCs - Volatile Organic Compounds

GAC - Granular Activated Carbon

Table 5-2: OU-1 VEW and DPE Well Monitoring

Monitoring Location	Monitoring Type and Frequency				
	Vacuum/ Pressure (inches of water column gauge)	Temperature (°F) and Relative Humidity (%)	Flow Rate (SCFM / ACFM)	PID (Total VOCs)	Analytical (VOCs, TO-15)
	Monthly	Monthly	Monthly	Monthly	Annually
Vapor Extraction Wells					
VE-1S	X	X	X	X	X
VE-2D	X	X	X	X	X
VE-5S	X	X	X	X	X
VE-6D	X	X	X	X	X
VE-6S [1]	X	X	X	X	X
VE-7D [2]	X	X	X	X	X
VE-8S	X	X	X	X	X
VE-9S	X	X	X	X	X
VE-10D [2]	X	X	X	X	X
VE-10S	X	X	X	X	X
VE-11S	X	X	X	X	X
VE-12S	X	X	X	X	X
VE-14D	X	X	X	X	X
VE-14S [3]	X	X	X	X	X
VE-15S [3]	X	X	X	X	X
VE-21S	X	X	X	X	X
VE-31S	X	X	X	X	X
VE-34S	X	X	X	X	X
VE-39S	X	X	X	X	X
Dual Phase Extraction Wells					
DPE-3	X	X	X	X	X
DPE-4	X	X	X	X	X
DPE-5	X	X	X	X	X
DPE-8	X	X	X	X	X
DPE-9	X	X	X	X	X

Notes:

[1] Well VE-6S was installed as an extraction well during the expanded SVE pilot test, and converted to the Interim SVE system during ISVE expansion in Sept & Oct 2010.

[2] VE-7D and VE-10D were converted from vapor extraction to dual phase extraction wells in March 2017

[3] Wells VE-14S and VE-15S were installed during ISVE expansion in September and October 2010.

°F - degrees Fahrenheit

% - percent

ACFM - cubic feet per minute under actual conditions

DPE - dual-phase extraction

PID - photoionization detector

SCFM - cubic feet per minute under standard conditions

TO-15 - Toxic Organics-15 (USEPA analytical method)

VEW- vapor extraction well

VOCs - Volatile Organic Compounds

Section 6
References

CDM Smith. 2018. Remedial Action Construction Complete Report, Omega Full-Scale On-Site (OU-1) Soil Remedy. November 30.

CDM Smith. 2015a. Addenda to Full-Scale On Site Soils Remedy Performance Monitoring Plan (REVISED DRAFT), Operable Unit 1. May 1.

CDM Smith. 2015b. Full-Scale On Site Soils Remedy Performance Monitoring Plan (REVISED DRAFT), Operable Unit 1. February 2.

CDM. 2007. Final Human Health Risk Assessment for On-Site Soils. November 9.

de maximis. 2017. OU1 On-Site Soil and OU3 AOC Indoor Air Removal Action Document Clarification, Omega Chemical Superfund Site, Operable Unit 1, Whittier, California. November 20.

de maximis. 2018. Full-Scale On-Site Soil Remedy Quarterly Performance Evaluation Report, Second Quarter 2018, Omega Chemical Superfund Site, OU-1. August 15.

USEPA. 2008. Record of Decision, Operable Unit 1 (Soils), Omega Chemical Corporation Superfund Site, Whittier, California. September

USEPA. 2010. Consent Decree No. 00-05051, October 6.

Appendix A

Health and Safety Plan

SITE-SPECIFIC
HEALTH AND SAFETY PLAN

Prepared For:

OPERATION, MAINTENANCE, AND MONITORING
OU-1 SOIL VAPOR EXTRACTION (SVE) SYSTEM, ADMINISTRATIVE SETTLEMENT AGREEMENT AND ORDER ON CONSENT (AOC) SVE SYSTEM, AND
GROUNDWATER CONTAINMENT SYSTEM (GWCS)
Former Omega Chemical Facility
12520 East Whittier Boulevard
Whittier, California

December 2018

Prepared by:

15375 Barranca Parkway
Suite J-101
Irvine, California 92618
Phone: (949) 453-1045
Fax: (949) 453-1047

Edward Batlle
Vice President

Gregory P. Gibbs, P.E.
Health and Safety Manager

TABLE OF CONTENTS

1.0 INTRODUCTION 3

2.0 SITE AND PROJECT DESCRIPTION 3

3.0 HEALTH AND SAFETY PERSONNEL 4

3.1 MEDICAL/TECHNICAL ADVISOR 4
3.2 HEALTH AND SAFETY MANAGER 4
3.3 SITE HEALTH AND SAFETY OFFICER 5
3.4 TEAM MEMBERS 5

4.0 GENERAL HEALTH AND SAFETY REQUIREMENTS 7

4.1 PERSONNEL TRAINING REQUIREMENTS 7
4.2 SITE SAFETY MEETINGS 7
4.3 MEDICAL SURVEILLANCE REQUIREMENTS 8
4.3.1 Baseline or Pre-Assignment Monitoring 8
4.3.2 Periodic Monitoring 8
4.3.3 Exit Physical 9
4.3.4 Exposure/Injury/Medical Support 9

5.0 HAZARD IDENTIFICATION AND CONTROL 9

6.0 PERSONAL PROTECTIVE EQUIPMENT 17

7.0 GENERAL FIELD ACTIVITY PROCEDURES 19

7.1 CHEMICAL HAZARD COMMUNICATION AND HANDLING PROCEDURES 19
7.2 MATERIAL SPILLS 21
7.3 DECONTAMINATION PROCEDURES 21
7.3.1 Personnel Decontamination Procedures 21
7.3.2 Decontamination Procedures for Equipment/Sampling Gear 21
7.3.3 Storage of Investigation-Derived Materials (IDM) 21
7.4 CONFINED SPACE ENTRY 22
7.5 LOCKOUT/TAGOUT 23
7.6 FALL PROTECTION 24
7.7 HEAT ILLNESS PREVENTION 24
7.7.1 Heat-Related Illness Prevention 24
7.8 COLD STRESS PROCEDURES 25
7.8.1 Cold Stress Monitoring 25
7.8.2 Recognition and Treatment 26
7.8.3 Cold Stress Prevention 27
7.9 NOISE HANDLING PROCEDURES 27
7.10 AIR MONITORING PROCEDURES 28
7.11 SPECIFIC FIELD ACTIVITY PROCEDURES 29

8.0 SITE AND WORK ZONE CONTROL 30

8.1 SITE SECURITY AND ENTRY 30
8.2 WORK ZONES 30

9.0 EMERGENCY PROCEDURES 32

10.0 DIR AND OSHA DOCUMENTATION 33

APPENDICES

A. Site-Specific Emergency and Location Information
B. Site-Specific Dash Card
C. Agreement and Acknowledgement Sheet
D. JHA Illness and Injury Prevention Plan
E. Site Map
F. Daily Safety Meeting Form
G. Material Safety Data Sheets (MSDSs)
H. Confined Space Entry
I. Lockout/Tagout Program
J. Fall Protection Program
K. JHA Heat Illness Prevention Program
L. Air Monitoring Form
M. Health and Safety Incident Report Form
N. OSHA Documents

1.0 INTRODUCTION

Site-specific emergency information is included as Appendix A.

This Site-Specific Health and Safety Plan (HASP) was prepared to ensure the wellbeing of all field personnel and the community surrounding the Former Omega Chemical Facility in Whittier, California (Site) during Operation, Maintenance, and Monitoring (OMM) field activities. JHA Environmental, Inc. (JHA) project staff and approved subcontractors must follow the policies and procedures established in this Site-Specific HASP. A copy of this Site-Specific HASP will be maintained on-Site during field activities and Dash Cards containing emergency information will be maintained in each JHA vehicle (a copy of the Site-Specific Dash Card is provided in Appendix B). All personnel assigned to this project must sign the Site-Specific Agreement and Acknowledgement Sheet (Appendix C), to confirm that they understand, agree, and will abide by the procedures and provisions of this Site-Specific HASP.

In general, all field activities will comply with regulations and standards set forth in the California Code of Regulations (CCR) Title 8 §5192 "Hazardous Waste Operations and Emergency Response" regulated by the California Occupational Safety and Health Administration (Cal-OSHA). The development of this Site-Specific HASP is in compliance with CCR Title 8 §5192 (b)(4)(B) and documents the evaluation of workplace hazards based on the Scope of Work (SOW) described in Section 2.0.

This Site-Specific HASP is to be used in conjunction with the procedures and requirements documented in the JHA Injury and Illness Prevention Program (IIPP). The purpose of the IIPP is to meet the statutory requirements contained within CCR Title 8 §1509 and §3203 that mandates the responsibility of each employer to implement a program that establishes company protocol and objectives for providing employees with a safe and healthful workplace. JHA is committed to providing each employee with a safe and health conscience workplace environment. A copy of the JHA IIPP is provided as Appendix D.

This Site-Specific HASP must be modified or amended when circumstances or site conditions develop that are beyond the scope of this plan. Changes in project scope of work and/or Site conditions as described must be amended in writing and approved by JHA's Health and Safety Manager (HSM).

2.0 SITE AND PROJECT DESCRIPTION

The Site is located at 12520 East Whittier Boulevard, Whittier, California. This Site-Specific HASP, and the work performed at the Site, are specifically related to the full-scale remedy including the OU-1 Soil Vapor Extraction System (SVE), the Administrative Settlement Agreement and Order on Consent (AOC) SVE System, and the Groundwater Containment System (GWCS). A Site map is provided as Appendix E.

This Site-Specific HASP has been prepared by JHA to perform operation, maintenance, and monitoring (OMM) of the OU-1 SVE, the AOC SVE, and the GWCS Systems and other related

tasks. This HASP addresses the safety issues associated with the Site that involve the following tasks:

- Routine OMM of all three Systems:
    - Weekly OMM of the OU-1 SVE, AOC SVE, and GWCS Systems;
    - Monthly and quarterly sampling of soil vapor and groundwater; and
    - Non-Routine OMM of the OU-1 SVE, AOC SVE, and GWCS Systems, as required.
- Additional related tasks may include:
    - Oversight of granular activated carbon change-outs;
    - Assisting in various aspects of soil vapor and groundwater extraction well installation and maintenance; and
    - System construction and modification oversight.

3.0 HEALTH AND SAFETY PERSONNEL

JHA will implement the project-specific tasks described in Section 2.0 and act according to the procedures and requirements documented in this Site-Specific HASP during all phases of the project. The following management structure will be instituted for the purpose of successfully and safely completing this project. The following sections briefly describe the roles and responsibilities of JHA's health and safety personnel.

3.1 Medical/Technical Advisor

The JHA Medical/Technical Advisor is responsible for providing technical input into the preparation of this Site-Specific HASP regarding worker exposure potential along with appropriate hazard reduction methods. Recommending a suitable medical monitoring program for Site workers is the responsibility of an occupational health doctor who will work in conjunction with **the JHA Medical/Technical Advisor, Ed Batlle, who can be reached at (714) 719-6852**.

3.2 Health and Safety Manager

The primary responsibility of the JHA Health and Safety Manager (HSM) is to ensure that this HASP remains up-to-date and applicable to the work being performed at the Site, and to ensure that the policies and procedures of this HASP are properly implemented. The HSM ensures that all personnel designated to work at the Site are qualified according to medical surveillance and health and safety training consistent with CCR Title 8 §5192 regulations covering Hazardous Waste Operations and Emergency Response. The HSM is responsible for providing the appropriate monitoring and safety equipment necessary for

the implementation of this HASP. Any significant changes to this HASP must be approved by **the JHA HSM, Greg Gibbs, who can be reached at (714) 719-6856**.

3.3 Site Health and Safety Officer

A JHA Site Health and Safety Officer (SHSO) will represent the HSM at the Site. The SHSO shall have the responsibility and authority to implement and enforce this HASP. These responsibilities include the following:

- The authorization to stop work and remove personnel from the work area if conditions change and/or effect on-Site and/or off-Site health and safety of the personnel assigned to the field implementation of the project described in Section 2.0 (authorization to proceed with work will be verified by the HSM);
- Modifying and/or developing new procedures after consultation with the HSM when Site conditions change due to natural or project related factors;
- Serving as the primary contact for any Site emergency situation;
- Conducting the daily Site safety meetings (Section 4.2);
- Providing Site-specific training for assigned personnel;
- Accompanying all OSHA and other governmental/regulatory agency personnel visiting the Site in response to a health and safety issues or during routine inspections; and
- Implementation of evacuation procedures, including shutting down all equipment, removing equipment from areas, and coordinating necessary on-Site emergency services.

A comprehensive listing of the Site SHSO responsibilities is listed in Table 1 below. The JHA SHSO for this project is JHA's senior on-site employee performing and implementing the tasks presented in Section 2.0.

3.4 Team Members

All team members, including JHA personnel assigned to this project and all employees of the specified subcontractors working at the Site will be responsible for understanding and complying with all Site health and safety requirements as documented in this HASP. All members of this group will have been provided Site-specific training regarding the hazards and protection involved with the project. Subcontractors will be responsible to provide their employees with appropriate equipment, clothing, and personal protective equipment (PPE; see Section 6.0).

The duties of the JHA project personnel in relation to Site health and safety and the personnel listed above are summarized in Table 1.

Table 1
JHA Project Structure

Title	General Description	Responsibilities
Project Manager	Reports to upper-level management. Has authority to direct response operations. Assume total control over Site activities. Works with the HSM to ensure that the HASP is current and up to date.	• Prepares and organizes background review of the project, the work plan, the Site HASP, and the field team. • Obtains permission for Site access and coordinates activities with appropriate officials. • Sees that the work plan is properly carried out and on schedule. • Brief the field personnel on specific assignments. • Together with the SHSO sees that health and safety requirements are met. • Prepared final report and follow-up on Health and Safety Incident Report (HSIR) events.
Site Health and Safety Officer (SHSO)	Advises the Project Manager on all aspects of health and safety on-Site. Stops work if Site operations threaten worker or public health and safety. Informs Project Manager and HSM of any changes in Site conditions or project status. The SHSO can also be the Project Manager for the site.	• Periodically inspects PPE and protective clothing. • Sees that PPE and protective clothing are properly stored and maintained. • Controls entry and exit at the access control points. • Monitors the workers for signs of stress. Including heat stress, cold exposure, chemical exposure, and fatigue. • Implements the Site-Specific HASP. • Conducts periodic inspections to assess whether the Site-Specific HASP is being followed. • Enforces the "buddy system". • Informs field staff of emergency procedures, evacuation routes, and telephone numbers of local hospital, poison control center, fire department, and police department. • Notifies, when necessary, local public emergency officials. • Submits HSIRs promptly to Field supervisor and Project Manager. • Coordinates emergency medical care. • Sets up decontamination lines and decontamination solutions appropriate for the chemical contaminants encountered. • Controls the decontamination of equipment, personnel, and samples from contaminated areas. • Facilitates the proper disposal of contaminated clothing and materials. • Maintains the availability of required equipment. • Advises health services and medical personnel of potential exposures. • Maintains and oversees operation of monitoring equipment and interpretation of data from the monitoring equipment.
Field Supervisor	Reports to Project Manager. Has authority to direct response operations. Assumes total control over Site activities.	• Manages field operations. • Executes the work plan and schedule. • Enforces safety procedures. • Acts as the SHSO when the Project Manager is not on-site. • Enforces Site control. • Documents field activities and sample collection. • Notifies, when necessary, local public emergency officials. • Submits HSIRs and initiates follow-up with Project Manager and SHSO.
Work Team	Reports to Field Supervisor or Project Manager for on-Site activities. Work parties must comprise at least two people for high hazard operations.	• Safely completes on-Site tasks required to fulfill the work plan. • Complies with the Site HASP. • Notifies SHSO or Supervisor of suspected unsafe conditions. • Submits HSIRs to SHSO and Field Supervisor.

4.0 GENERAL HEALTH AND SAFETY REQUIREMENTS

4.1 Personnel Training Requirements

Consistent with the 29 CFR §1910.120 and CCR Title 8 §5192 (e)(3)(A) all "general Site workers" (JHA employees and subcontractors) are to be certified with a minimum of 40 hours of OSHA Hazardous Waste Operations and Emergency Response (HAZWOPER) training and three (3) days of field training involving operations related to hazardous materials with a qualified supervisor. As required by CCR Title 8 §5192 (e)(8), all employees and subcontractors must also be certified with an additional eight (8) hours of OSHA refresher training on an annual basis. Individuals designated as Site Supervisors are required to have at least eight (8) additional hours of hazardous waste operation supervisor training per CCR Title 8 §5192 (e)(4). At a minimum, all personnel are required to be trained to recognize the Site hazards (Section 5.0), the provisions of this Site-Specific HASP, and the health and safety personnel (Section 3.0). In addition to the above-mentioned training, JHA personnel are CPR trained and certified, at a minimum, every two years.

4.2 Site Safety Meetings

Mandatory Site safety orientation/training meetings ("tailgates") will be conducted as required by CCR Title 8 §5192 (b)(4)(C) and (D) by the SHSO prior to the implementation of field activities each day, when there are modifications to this Site-Specific HASP, and/or when newly assigned personnel begin fieldwork at the Site. All personnel (JHA employees and subcontractors) involved in field activities related to the Site shall attend these daily meetings that will include, at a minimum, the following topics:

- Description of the assigned tasks and their hazards;
- Coordination of Site activities;
- Identification of methods/precautions to prevent injuries;
- Identification of the chemicals of concern;
- Emergency planning;
- Modifications to this Site-Specific HASP, including addendums; and
- Input from the field personnel on health and safety issues pertaining to the Site tasks.

At the end of each meeting, the SHSO will collect the attendees' signatures indicating their receipt, understanding, and acknowledgement to comply with this Site-Specific HASP and the topics discussed during the safety meeting. An example copy of the daily safety meeting

form is provided in Appendix F. Daily signed safety meeting forms will be kept with the on-Site copy of this Site-Specific HASP as record.

4.3 Medical Surveillance Requirements

Medical monitoring programs are designed to track the physical condition of employees on a regular basis as well as survey pre-employment or baseline conditions prior to potential exposures. The medical surveillance program described in Sections 4.3.1 through 4.3.4 below is consistent with the requirements listed in 29 CFR §1910.120 (f) and CCR Title 8 §5192 (f).

4.3.1 Baseline or Pre-Assignment Monitoring

Prior to being assigned to a hazardous or a potentially hazardous activity involving exposure to hazardous substances, each employee must receive a pre-assignment or baseline physical. The contents of the physical are to be determined by the employer's medical consultant. As suggested by National Institute for Occupational Safety and Health (NIOSH); OSHA; EPA's Occupational Safety and Health Guidance Manual for Hazardous Waste Site Activities, the minimum medical monitoring requirements are as follows:

- Complete medical and work histories;
- Physical examination;
- Pulmonary function tests (FVC and FEV1);
- Chest X-Ray (every 2 years);
- EKG;
- Eye examination and visual acuity;
- Audiometry;
- Urinalysis; and
- Blood chemistry, including hematology, serum analyses, and heavy metals toxicology.

No additional testing for specific contaminant health effects is required. The pre-assignment physical should categorize each employee as fit-for-duty and able to wear respiratory protection.

4.3.2 Periodic Monitoring

After the baseline physical, all employees are required to complete a physical every 12 months; unless the advising physician believes a shorter interval is appropriate. The annual

physical examination will reflect the baseline exam that should categorize each employee as fit-for-duty and able to wear respiratory protection.

4.3.3 Exit Physical

Enrollment in the medical monitoring program will end at such time as the employee terminates the program and/or the company. At that time, each employee is encouraged to complete an exit physical examination.

4.3.4 Exposure/Injury/Medical Support

As a follow-up to an injury or possible exposure above permissible exposure limits (PELs), all employees are entitled to, and are encouraged to seek medical attention and additional physical examinations. Depending upon the type of exposure, it may be critical to perform follow-up testing within 24-48 hours. It will be at the discretion of the employer's medical consultant to advise the type of testing required to accurately monitor for possible exposure effects.

5.0 HAZARD IDENTIFICATION AND CONTROL

The anticipated chemical and physical hazards, and the subsequent hazard control measures related to the SOW described in Section 2.0 are identified in Table 2 below.

TABLE 2
Hazard Identification and Control

Hazards	Control
Ladders/Scaffolds	Ladders will be utilized to access the tops of the air stripper and carbon vessels during carbon change-outs: 1. Use ladders with secure safety feet. 2. Pitch ladders at a ratio of 1:4 (horizontal: vertical) on a level surface. 3. Extension ladders must extend 3 feet (3 rungs) above platform/work area. 4. Tie-off ladders to the top of the vessel. 5. Only use non-conductive ladders. 6. Both scaffolding and ladders require pre-use inspection for integrity. Ensure that ladders are free of cracks and pay particular attention to scaffold planking (secure and strong), levelness of erection, avoidance of power lines, and bolted pipe connections.
Fall Protection	It is anticipated that due to having to access the tops of the air stripper and carbon vessels with ladders as described above, that fall protection in the form of a personnel harnesses and anchor points at the top of each unit will be required. In general, a fall protection system should be utilized when there is a danger of a worker: • Falling from a height of over 4 feet; • Falling from less than 4 feet could cause injuries more severely than a fall from 4 feet or higher due to the potential fall being broken by uneven surfaces, rotating equipment, piping, and/or hot or cold surfaces; • Falling from 4 feet but less than 10 feet in the case of a permanent installation such a stairs or access scaffold where rails or other means of fall protection have not been provided; and/or • Utilizing an aerial bucket, man lifts, or forklift-attached man baskets. A fall protection system shall consist of a full-body harness with lanyard and/or lifeline, a connecting device (used to connect the harness to the anchor point) and a secure anchor point located above or at an even level

Hazards	Control
	with the worker. The following safety guidelines shall be followed at all times when utilizing any fall protection system: 1. Prior to use, all fall protection equipment shall be visually inspected for weakness and defects. 2. Rope off the area below the work zone so unauthorized personnel do not enter. 3. Clear all unnecessary equipment from below the work zone. Refer to Appendix J for the Fall Protection Safety Workplan and Inspection Forms.
Hand/Foot Injury	1. Wear protective gloves as needed to suit the work being performed (e.g., chemical-resistant gloves will be worn when handling chemicals or sampling for suspected chemicals). 2. Steel-toed/steel-shanked safety boots must be worn whenever working around heavy objects (or as required by the HASP). Insulated and/or waterproof boots may also be warranted depending on weather conditions. Boots should be inspected periodically for signs of wear (e.g., cracks in rubber or along soles) and replaced as required. Durable footwear which provides adequate ankle support should be worn when working in rugged terrain. 3. Use proper lifting techniques to avoid dropping heavy loads on hands and feet (refer to lifting section below). 4. Be aware of moving machinery and heavy equipment in the work area and tuck away any loose clothing.
Back Injury	1. Use a mechanical lifting device or a lifting aid where appropriate. 2. If you must lift, plan the lift before doing it. 3. Check your route for clearance. 4. Bend at the knees and use leg muscles when lifting. 5. Use the buddy system when lifting heavy or awkward objects. 6. Do not twist your body while lifting.
Compressed Gas Cylinder	1. Keep cylinder valve caps screwed on at all times when regulators and gauges are not attached to the cylinder and when the cylinder is being moved. 2. Do not use force to remove valve cap if stuck. 3. Protect cylinders from cuts and abrasions. 4. Use extreme care not to drop cylinders. 5. Secure cylinders in an upright position using chains or other approved restraints. 6. Do not use cylinders for rollers or support. 7. Do not tamper with cylinder valves or safety devices. 8. Do not lift cylinders using the protective valve caps. 9. Do not substitute oxygen for compressed air. 10. Store all oxygen cylinders at least 20 feet from all fuel gas cylinders and gasoline or diesel storage tanks. 11. Keep cylinders away from exposure to open flame. 12. Do not use oil or grease on oxygen cylinders or regulator connections to avoid an explosion. 13. All cylinders must be labeled and indicate when they have been emptied. 14. Check all valves and fittings on a cylinder for leaks with each use. If leakage is found, place a tag on the cylinder indicting the defect, and report it to the SHSO. 15. Leak test all connections using soap solution where possible. 16. Be certain that the second stage of the regulator is closed, after attaching the regulator to the cylinder, but before opening the cylinder valve. 17. Stand to one side of the regulator gauge while you slowly open the cylinder valve 1/4 of a turn. 18. Keep wrench on the valve stem of an acetylene cylinder when in use. 19. Close the cylinder valve and bleed the pressure off hoses on cylinders when not in use. 20. Use a cylinder cart to transport cylinders distances greater than 2 feet.
Exposure to Unidentified Hazardous Materials	1. Stand up-wind of hazardous materials whenever possible. 2. An isolated and controlled staging area secured from unauthorized personnel must be provided for safe evaluation and handling of these materials (see Table 4: Chemical Handling Procedures and Table 13: Site Security and Work Zone Examples). 3. Only informed and authorized personnel are allowed in staging area. 4. A specific work plan must be developed prior to sampling and evaluation of unidentified hazardous materials for “hazardous materials categorization”. 5. Once identified, hazardous materials must be separated into zones based on (at a minimum), chemical compatibility, reactivity criteria, combustibility/flammability, radioactivity and extremely hazardous materials (which may include high toxicity, explosivity, and/or any of the aforementioned criteria).
Forklift	Refer to Appendix N for Operating Rules for Industrial Trucks. 1. Only operators who have completed the forklift operation skill training may operate a forklift. 2. Wear designated work clothes and protection devices.

Hazards	Control
	3. Inspect the forklift before starting work and inform the supervisor, immediately, if there is are problems. 4. Contact the rental company for repairs or modifications. 5. Before operating the forklift fasten your seat belt. 6. Always operate the forklift at a speed that is appropriate for the environment. Observe the work site rules and operate the forklift safely. 7. Avoid Hazards – Do not drive over objects such as pieces of wood scattered on the ground. Doing so could cause the load to shift or the operator to lose control. 8. Unstable Load – Stack the load on the pallets and skids safely and properly. Use prevention measures such as ropes or binders if required. Do not carry unstable loads. 9. Don't Use Fork Tips – Do not use the tips of the forks as a lever to raise a heavy load. Do not push a load with the tip of the forks, and do not use the tilt cylinder to pull a load. 10. Use Suitable Pallets – Use pallets and skids that can withstand the weight of the load. Do not use damaged, deformed, or decayed pallets and skids. 11. Use Helper in Narrow Spaces – assign a helper at narrow places and make sure to predetermine signals to be used. The forklift operator must follow the signals given by the helper. 12. Look Left and Right and Sound Horn – If the view is obstructed, always stop once, sound horn, and look left and right before proceeding. 13. Keep Forks Low – Do not travel with the forks higher than a foot from the floor, and never travel or turn with the forks in an elevated position or tilted forward. 14. Clear Visibility – If visibility is obstructed, a lookout helper may be required. Drive carefully when backing up. 15. No Riders – A forklift is built for only one person. It is dangerous for anyone to ride on the forks or anywhere else on the forklift. 16. No Hands On Mast – Do not place hands or feet on the cross member of the mast. Your hand will be severed if the mast is lowered while your hand is on it. 17. Slow Down When Turning – Travel slowly when turning. Forklifts can tip over even at very slow speed. The combination of speed and the sharpness of a turn can cause a tip over. 18. Special Care For Special Loads – Take special care when carrying a long or wide load. Turn and work slowly to prevent the load from shifting. Make sure the load is balanced. 19. Watch Height – Be careful of the height of the upper part of the forklift when entering or exiting buildings. 20. Too Heavy – Do not travel with a load that exceeds the lifting capacity.
Vehicular Traffic	Access to extraction well DPE-9 and GWCS Extraction wells EW-1 - 5 located on Putnam St. may require traffic control delineation, depending on the work being performed. In general, the following applies to all locations where vehicle traffic is present: 1. Wear traffic safety vest when vehicle hazard exists. 2. Use cones, flags, barricades, and caution tape to define work area. 3. Use vehicle to block work area if applicable. 4. Implement a traffic control plan for high-traffic situations.
Confined Space Entry	The extraction and injection well vaults will be treated as a confined space. It is mandatory that no JHA employee or subcontractor shall enter an area identified as a confined space without following the confined space entry procedures as stated in Appendix H.
Trip Hazards	1. Work within the System building may present trip hazards, watch for piping, conduit and uneven surfaces. 2. When working at the site be mindful of where one is walking as the terrain changes depending on where one is located at the site.
Drum and Container Handling	1. Only trained personnel should open drums containing unknown materials. This is not part of the scope of this HASP. 2. Bulging drums or containers are an indication of pressure build-up. Open all drums or bungs extremely slowly to determine the presence of vapors or pressure inside the drum. If the possibility of fire or explosion exists, a protective shield should be used and/or remote opening devices. Employees not directly involved with opening a container shall be kept a safe distance away. 3. Use only drums and containers that meet the appropriate DOT, US/OSHA, and EPA regulations. 4. Utilize drum/container handling equipment whenever possible. The equipment should have a sufficiently rated load capacity and should be able to operate smoothly on the available surface. 5. Label and identify drums and containers when moved to the staging areas to safely identify and classify their contents. Segregate incompatible drums. 6. Inspect the integrity of the drum container before moving. Any drum or container lacking integrity shall be placed within an over pack container.

Hazards	Control
	7. Staging areas require adequate escape routes. Staging area should provide secondary containment for all moved drums. 8. Employees must be warned of the potential hazards associated with the contents of containers or drums prior to moving said containers or drums. 9. Organize site operation to minimize the amount of drum or container movement. Have a clear view of the available pathway when moving drums. If needed, an additional person should be available to provide guidance. 10. Never stand on drums or containers. 11. Use non-sparking tools and appropriate grounding and bonding equipment. 12. Appropriate fire extinguishing equipment must be onsite at all times during drum handling. 13. Spill control equipment shall be on-site in areas where spills ruptures or leaks may occur.
Inclement Weather	1. Stop outdoor work during electrical storms. 2. Take cover indoors or in vehicle if necessary. 3. Listen to local forecasts for warnings about specific weather hazards.
Sunburn	1. Skin exposure to ultraviolet radiation can result in sunburn. 2. Use long-sleeved shirts, hats, and sunscreen to protect against sunburn.
Heat and Cold Stress	Please refer to Section 7.7 and Appendix K for heat illness prevention and 7.8 for cold stress procedures.
Biohazard	1. Black Widow spiders may be present in well boxes and vaults, on the underside of ledges, rocks, plants, and debris. 2. Cold weather may drive these spiders indoors. 3. Workers will wear gloves when opening well boxes and working in areas where webs may be strung. 4. If possible, when encountering a Black Widow, it should be crushed underfoot and its web should be knocked down with a stick.
Noise	Excessive noise may be generated during the operation of the remediation system. The following are guidelines in the case of excessive noise. Please refer to Section 7.9 of this document for specific and detailed noise handling procedures: 1. Hearing protection is required when measured sound pressure levels (SPL) exceed 85 dB where personnel are working (Table 8). 2. Wear hearing protection when working around operating equipment such as operating remediation systems, drill and development rigs, saw or coring machines, or air knife rig. 3. Wear hearing protection whenever you need to raise your voice appreciably above normal conversational speech due to a loud noise source; this much noise may indicate the need for protection. 4. Wear hearing protection in areas with constant or loud noise. 5. Know the effects of noise, including: a. Workers being startled, annoyed, or distracted. b. Physical damage to the ear, pain, and temporary and/or permanent hearing loss. c. Communication interference that may increase potential hazards due to the inability to warn of danger and proper safety precautions to be taken. 6. Implement the company Hearing Conservation Program when noise exposures equal or exceed an 8-hour, time-weighted average (TWA) sound level of 85 decibels on the A-weighed scale (dB). 7. Utilize feasible administrative or engineering controls if workers are subjected to noise exceeding an 8-hour TWA sound level of 90 dB.
Exposure to Airborne Dust	1. Utilize wet methods (spraying ground, wet drilling, etc.) when visible signs of airborne dust are generated, using precautions to avoid the development of runoff. 2. Stand up-wind whenever intrusive activities occur and generate visible signs of airborne dust. 3. Keep head and face away while pouring sand, bentonite and dry concrete mix.
Decontaminating Equipment	1. All personnel must don appropriate PPE (Section 6.0) at all times including nitrile gloves and face shield or goggles. 2. Use caution when utilizing Liquinox to decontaminate field equipment (see Appendix G for Liquinox MSDS). 3. Contain all decontamination rinsate in proper drums or tanks and label appropriately for off-Site disposal. Refer to Section 7.3 for general decontamination procedures.

Hazards	Control
Electric Shock	1. Maintain appropriate distance from overhead utilities; 20-foot vertical and horizontal minimum clearance from power lines required, 10-foot vertical and horizontal minimum clearance from shielded power lines. 2. Use ground-fault circuit interrupters as required. 3. Use three-pronged plugs and extension cords. 4. Contact your local underground utility-locating service prior to conducting intrusive (subsurface) work. 5. Conduct utility clearance prior to boring operations at each location. 6. Do not work around wet areas near electrical sources without special provisions approved by the HSM. Install adequate warning signs and barriers (in plain sight) in all areas where hazardous electrical facilities exist. 7. Use only heavy duty electrical cords that are not subjected to excessive bending, stretching, or kicking. All cords and wires shall be frequently inspected for signs of defects. Damaged or frayed electrical wires, cords, and plugs shall be immediately replaced by a qualified electrician or properly-trained person. 8. Equip all portable extension cords with a non-conducting plug and/or another socket shell. All electrical cords shall be equipped with three-blade grounding type plugs. 9. Do not permit overloading of electrical circuits at any time. The replacement of fuses or circuit breakers with makeshift materials or over-capacity fuses is strictly prohibited. 10. A minimum clearance of 20 feet (radius) will be maintained between heavy equipment (i.e., drill rig) and any overhead power lines, regardless of voltage. 11. Before subsurface work, a utilities search for underground lines will occur and will be documented (if within 3 feet of marked underground utility, hand digging is required). 12. Installation and maintenance of electrical facilities or equipment must only be performed by qualified and properly authorized personnel or electrical subcontractors. Apprentice personnel permitted to work on electrical equipment shall be under the supervision of a fully qualified electrician. 13. Follow the company Lock-out/Tag-out (Section 7.8) procedures when applicable. Electrical equipment and lines shall always be considered “energized” until proven “de-energized”. 14. Before beginning work, each electrical circuit shall be inspected, tested, and where possible, isolated from the power source. Extreme care shall be exercised as wires designed to operate at ground potential may become energized by faulty or inadequate connections. 15. Do not wear rings, watches or metallic objects that could act as conductors when working with electrical circuits. 16. Do not use metal ladders and un-insulated tools while working with electrical circuits and equipment. 17. Protect electrical wires with suitable protective conduits or devices where they are exposed to possible damage. 18. Connect grounding devices to a ground before contacting any conductor of a circuit. When grounding devices are removed, they shall be disconnected from the circuit before being disconnected from ground. 19. The type of circuit shall determine the type of protective equipment required. Rubber gloves, sleeves, blankets, mats, and insulated platforms shall be used as required. Questions regarding PPE should be directed to the SHSO. 20. Inspect all insulated protective equipment continuously for defects or damages. Any defective equipment shall be replaced before using. 21. Establish and enforce testing schedules for insulation qualities for protective equipment. All users shall verify that equipment has been satisfactorily tested prior to use. 22. Electricians shall be familiar with the National Electrical Code; state and local electric codes; US/OSHA standards, including 29 CFR 1926, Subpart K; and applicable sections of the National Fire Protection Association Codes. 23. When working on energized circuits of 440 volts or higher, at least one qualified electrician and one other employee shall be present. 24. Use only NEC approved grounding equipment as a ground for electrical equipment. Metal frames on electricity-powered equipment, electrical facilities, and transmission equipment shall be connected to the grounding system. Alternative grounding systems complying with applicable electrical codes may be used for temporary portable equipment. 25. Any equipment within the system compound requiring 480 volts or higher will don a “high voltage” sign.
Physical Injury	1. All personnel must don appropriate PPE (Section 6.0) at all times. 2. Maintain visual contact with the equipment operator and wear orange or yellow safety vest when heavy equipment is used on-Site. 3. Avoid loose fitting clothing. 4. Prevent slips, trips and falls; keep work area uncluttered. 5. Keep your hands away from moving parts (i.e. augers on drill rigs). 6. Test the emergency shut-off switch on the drill rig daily.
Eye Injury	1. Wear appropriate eye protection according to the task at hand.

<table>
<tr><th>Hazards</th><th>Control</th></tr>
<tr><td></td><td>
<table>
<tr><th>HAZARD</th><th>TYPE OF PROTECTION</th></tr>
<tr><td>Impact</td><td>Safety glasses with side shield or vented safety goggles</td></tr>
<tr><td>Heat (Sparks)</td><td>Vented safety goggles or safety glasses with a face shield</td></tr>
<tr><td>Chemical</td><td>Hooded vented safety goggles or full-face respirator (if mild chemicals then safety glasses with side shield is acceptable)</td></tr>
<tr><td>Light Radiation</td><td>Tinted/reflective safety glasses or tinted/reflective face shield</td></tr>
<tr><td>Dust</td><td>Hooded vented safety goggles</td></tr>
</table>
2. Apply anti-fog product to lens not previously treated.
3. Minimize the amount of vapor or particulate matter generated, if possible.
4. Avoid touching the face and eyes.
5. Flush eyes with water for at least 15 minutes if chemicals do get into the eyes. If condition persists, seek medical attention.
6. If dust or foreign objects are in your eyes, do not rub your eyes.
7. If an object becomes embedded in the eye, do not attempt to remove. Lightly bandage your eyes, or both eyes, if possible and immediately seek medical attention.
8. Do not wear contact lenses if chemical or dust hazard is present (e.g., decontamination or preservation chemicals used during sampling).
9. Provide on-site training to workers before tasks at hand.
10. If visitors enter area, stop work until they are properly protected.</td></tr>
<tr><td>Knives/Blades</td><td>1. Always wear proper protective equipment. This should include:
a. Heavy-duty leather gloves,
b. Steel-toed boots with non-slip soles, and
c. Hardhat and eye protection.
2. Check the work area and make sure that:
a. The ground is free of obstacles such as rocks, stumps, holes, and wet or otherwise slippery conditions.
b. You can get a firm footing on the ground.
3. Route cords, hoses, and cables supplying power to portable power tools to prevent tripping hazards.
4. Protect tools from corrosion damage.
5. Keep tools free of accumulated dirt and unnecessary oil or grease.
6. Worn, damaged or dull blades should be sharpened or replaced as necessary.</td></tr>
<tr><td>Fire</td><td>1. Know fire prevention procedures, fire-fighting techniques and essential precautions to prevent injury.
2. Do not stop to get anything out of a building or area if evacuation is required JUST GET OUT - and assemble in the predetermined evacuation assembly points.
3. There are three elements to starting a fire: 1) a fuel source; 2) an oxygen source; and 3) a point of ignition.
4. Know how and when to use different types of fire extinguishers.
5. Keep all fire extinguishers in workable condition and accessible at all times. Access to or visibility of extinguishers shall not be obstructed.
6. Control static electricity (e.g., ground equipment)
7. Remove only the minimum required supply of paints, solvents, or other flammables from storage. At no time shall the quantity removed exceed one day’s working supply.
8. Do not allow combustible products of rubbish, waste or other residues to accumulate.
9. Oil soaked rags and material subject to spontaneous combustion shall only be stored in non-combustible containers with self-closing lids.
10. Do not store gasoline, flammable solvents, and liquids inside a building unless the structure has been approved for flammable storage containers. Only US/OSHA-approved storage cabinets shall be used for all flammable liquids, paints or solvents.
11. Flammable liquids shall be stored in locations that will not interfere with evacuation of the area in case of a fire.
12. Do not permit smoking, striking of matches, or other sources of ignition outside of designated “SMOKING” areas.
13. Discard cigarette butts, matches or other similar materials in non-combustible containers.</td></tr>
<tr><td>Lifting</td><td>1. Proper lifting techniques include:
a. Feet - Feet should be parted, with one foot alongside the object being lifted and one behind. Feet should be comfortably spread to give greater stability. The rear foot should be in position for the upward thrust of the lift.</td></tr>
</table>

Hazards	Control
	b. *Back* - Use the sit-down position and keep the back straight but remember that "straight" does not mean "vertical". A straight back keeps the spine, back muscles, and organs of the body in correct alignment. It minimizes the compression of the abdomen that can cause a hernia. c. *Arms and Elbows* - The load should be drawn close to the body, and the arms and elbows should be tucked in. When the arms are held away from the body, they lose much of their strength and power. Keeping the arms tucked in also helps keep body weight centered. d. *Palm* - The palm grip is one of the most important elements of lifting. The fingers and the hand are extended around the object to be lifted. Use the full palm; fingers alone have very little power. e. *Chin* - Tuck in the chin so the neck and head continue the straight back line. Keep the spine straight and firm. f. *Body Weight* - Position the body so its weight is centered over the feet. This provides a more powerful line of thrust and assures better balance. Start the lift with a thrust of the rear foot. Shift hand positions so the object can be boosted after knees are bent. Straighten knees as object is lifted or shifted to the shoulders. To change direction, lift the object to a carrying position, and turn the entire body, including the feet. Do not twist your body. In repetitive work, both the person and the material should be positioned so that the worker will not have to twist his body when moving the material. If the object is too heavy to be handled by one person, get help. 2. Limit continuous lifting of weights to 50 pounds or the maximum allowed by the client whichever is less. Lifts of heavier weights are permitted on an interim basis. Help shall be obtained for lifting of loads greater than 50 pounds or the maximum allowed by the client whichever is less. Mechanical equipment should be used on heavy materials when possible. If mechanical assistance is not available, adequate manpower to maintain the 50-pound limit per employee will be required. 3. Do not lift more weight than can be handled comfortably, regardless of load weight. If necessary, help should be requested to lift a load so that the lifting is comfortable. 4. Use drum dollies when moving drums or barrels. 5. Inspect objects for grease or slippery substances before they are lifted to ensure that the object will not slip. 6. Do not carry long, bulky or heavy objects without first verifying that the way is clear and that vision is unobstructed. This ensures that other persons or objects will not be struck by the load. 7. Do not carry loads that cannot be seen over or around. 8. Exercise caution when lifting above the chest level. 9. Make sure workers are physically suited for the job before assigning jobs requiring heavy and/or frequent lifting. A person's lifting ability is not necessarily indicated by his height or weight. 10. Before lifting an object, consideration should be given to how the object will be set down without pinching or crushing hands or fingers. For example, to place an object on a bench or table, the object should be set on the edge and pushed far enough onto the support so it will not fall. The object can then be released gradually as it is set down and pushed in place with the hands and body from in front of the object. 11. When two or more people are handling the same object, one should "call the signals". All the persons on the lift should know who this person is and should warn him if anyone in the crew is about to relax his grip.
Portable Power/Hand Tools	1. Read instruction manual for the safe operation of any portable power tool. 2. Route cords, hoses, and cables to prevent tripping hazards or contact with equipment. 3. Avoid abusing the power supply lines of portable equipment. Excessive scraping, kicking, stretching, and exposure to grease and oils will damage lines or cause them to fail prematurely, and possibly injure the operator or fellow workers. 4. Inspect cords, hoses, and cables for wear or deterioration. 5. Do not use electrically powered tools near flammable materials or explosive atmosphere, unless they are of the explosion-proof type meeting the National Electrical Code for potentially explosive work areas. Employees operating the equipment should be aware of sparks and or metal fragments when using this equipment. 6. Ground-check portable electric power tools with metal cases initially and quarterly. At no time will electrical power equipment be operated without proper grounding. All electrical cords and cables, including extension cords, shall include a third wire ground. 7. Prohibit operations of electric tools in wet or damp areas. 8. Size cords adequately for length and the electrical demand of the tool. Otherwise, they may cause a fire hazard. 9. Limit use of tools to the purpose for which the tool is intended (e.g., wrenches will not be used as hammers). Defective tools (e.g., with mushroomed heads or split or defective handles) shall not be used.

Hazards	Control
	10. Keep tools free of accumulated dirt and unnecessary oil or grease. Moving and adjustable parts shall be lubricated frequently to prevent wear and misalignment. 11. Replace or repair damaged or worn tools promptly. Temporary or makeshift repairs are prohibited. At the discretion of the supervisor, discard all tools that cannot be repaired safely. Supervisors shall decide when to discard a tool. 12. Store tools in suitable boxes or containers. Loose tools shall not be stored on ledges or where they might fall. Tools shall be picked up when a job is completed and not be allowed to accumulate in the work area. Store all tools in a safe place. 13. Do not use conducting (i.e., metal) tools around electrical facilities. Insulated tools, approved for electrical work, shall be tested frequently for proper insulation. 14. Select the correct size and type of wrench for each job. Wrench handles shall not be extended with a pipe or cheater because the jaws will spread. 15. Repair mushroomed punch, drift and chisel heads. Mushroomed heads represent crystallized metal that will break and fly off when struck. 16. Wear eye protection at all times.
Vapor, Soil and/or Groundwater Sampling	1. All personnel must don appropriate PPE (Section 6.0) at all times including nitrile gloves. 2. No eating within the exclusion zone (Section 8.0). 3. Retain samples in appropriate labeled containers within a cooler following chain-of-custody protocol.
Drilling/Boring Operations	1. All personnel must don appropriate PPE (Section 6.0) at all times including: safety glasses, hard hat, steel-toe work boots and ear protection. 2. Driller and helper must be present during all active drilling operations. 3. Driller and helper and other Site personnel must demonstrate knowledge of the drill rig emergency shut off switch(es). 4. Be aware of pinch points. 5. Unauthorized personnel must be kept clear of drill rig. 6. Area of drilling operation must be cordoned off and barricaded. 7. Watch for overhead power lines when raising and lowering drill rig mast. 8. When hazardous conditions are deemed present, operation must be shut down per SHSO recommendations. 9. Only drill at locations that have been previously cleared of all underground utilities and transmission pipelines. 10. Conduct air monitoring per the requirements set forth in Section 7.10.
Well Installation and Development	1. All personnel must don appropriate PPE (Section 6.0) at all times including: safety glasses, hard hat, steel toe work boots and ear protection. 2. Driller and helper must be present during all active drilling operations. 3. Driller and helper and other Site personnel must demonstrate knowledge of the drill rig emergency shut off switch(es). 4. Be aware of pinch points. 5. Unauthorized personnel must be kept clear of drill or development rig. 6. Area of well installation or development operation must be cordoned off and barricaded. 7. Watch for overhead power lines when raising and lowering drill or development rig mast. 8. When hazardous conditions are deemed present, operation must be shut down per SHSO recommendations. 9. Use proper lifting techniques when carrying bags of sand and bentonite. 10. Avoid breathing dust from dry sand, cement and/or bentonite used during installation. 11. Have eye wash station nearby during wet operations.
Welding, Cutting, Brazing	1. All personnel must don appropriate PPE (Section 6.0) at all times including welder's gloves and face shield. 2. Conduct fire safety evaluation. 3. Complete Hot Work Permit 4. Ensure flammable materials are protected from hot work, sources of ignition. 5. Ensure fire watch/fire extinguisher is on standby by hot work locations. 6. Wear appropriate eye/face shielding.
Concrete and Asphalt Coring/Cutting	1. All personnel must don appropriate PPE (Section 6.0) at all times including: safety glasses, steel toe boots, work gloves, safety glasses and ear protection. 2. Be aware of pinch points. 3. Make sure to anchor coring machine. 4. Set up exclusion zone as needed.

Hazards	Control
Utility **Clearance/Air Knifing**	1. All personnel must don appropriate PPE (Section 6.0) at all times including: safety glasses, steel toe boots, work gloves, safety glasses and ear protection. 2. Be aware of pinch points. 3. Protect area around location to minimize flying debris. 4. Stop operations every 3 to 4 inches to observe down-hole conditions. 5. Do not put any body parts in the path of the suction hose.
First aid kit, emergency eye wash station, fire extinguisher and absorbent pads will be located on-Site in field vehicles.	

Previous assessment investigations indicate that the constituents of concern at the Site are primarily halogenated volatile organic compounds (HVOCs) Freon 11, Freon 113, 1,1-Dichloroethene (1,1-DCE), Trichloroethene (TCE), and Tetrachloroethene (PCE) in soil vapor and 1,1-Dicholoroethane (1,1-DCA), TCE and PCE in groundwater. Refer to Appendix G for material safety data sheets (MSDSs). Care should be taken to not ingest and/or have direct skin exposure to soil and/or groundwater, or inhale soil vapor during Site activities. The proper and appropriate personal protective equipment (PPE) should be donned at all times during Site field activities (Section 6.0).

6.0 PERSONAL PROTECTIVE EQUIPMENT

The level of protection required while performing tasks at the Site will be dependent upon known and/or suspected contaminants to be encountered during the proposed scope of work (addressed at the end of Section 5.0). Table 3 addresses the OSHA levels of required PPE and the criteria in which to utilize each level.

TABLE 3
Personal Protective Equipment

Level	Required Equipment	Criteria
Level D (lowest)	• Steel-toed boots • Approved safety glasses or goggles • Hard hat (if overhead threat is present) • Orange or yellow safety vests are required for all on-Site work and when vehicular traffic is in or adjacent to the work area • Nitrile gloves for vapor, soil, and water sample collection, and decontamination handling • Ear protection	• When there is no known atmospheric hazard; • When there is no potential for unexpected inhalation of or contact with hazardous levels of any chemicals; and • The scope of work precludes liquid splashes or immersion.
Modified Level D	• Level D plus the following • Chemical-resistant (acid or solvent) boot covers • NBR outer and nitrile inner gloves. • Face shield/goggles if splash hazard is present	• Same as Level D with the addition of known chemical handling that does not pose an inhalation hazard.
Level C	• Modified Level D plus the following • Full or half face, NIOSH-approved, air purifying respirator with organic vapor/acid gas cartridges • Hooded PE-coated Tyvek® suit	• When atmospheric contaminants, liquid splashes, or other direct contact will not adversely affect or be absorbed through may exposed skin; • When the types of air contaminants have been identified, concentrations measured, and an air-purifying respirator is available that can remove the contaminants; and • All criteria for the use of air-purifying respirators are met.
Level B	• Modified Level D plus the following • NIOSH/MSHA approved full-face positive pressure demand supplied air respirator, either airline or self-contained. • Chemical resistant (acid or solvent) boot covers (if required) • Hooded PE-coated Tyvek® suit	• When the type and atmospheric concentration of substances have been identified and requires a high level of respiratory protection, but less skin protection; • When the atmosphere contains less than 19.5% oxygen; or • When the presence of unidentified vapors or gases is indicated by PID, but vapors or gases are not suspected of containing high levels of chemicals harmful to skin or capable of being absorbed through the skin.
Level A (highest)	• Modified Level D plus the following • NIOSH/MSHA-approved full-face positive pressure demand supplied air respirator, either airline or self-contained. • Totally-encapsulating chemical-protective suit	• When a hazardous substance has been identified and requires the highest level of protection for skin, eyes, and the respiratory system based on either the measured (or potential for) high concentration of atmospheric vapors, gases, or particles; or operations involve a high potential for splash, immersion, or exposure to unexpected vapors, gases or particulates of materials that are harmful to skin or capable of being absorbed through the skin; • When substances with a high degree of hazard to the skin are known or suspected to be present, and skin contact is possible; or • When operations must be conducted in confined, poorly ventilated areas, and the absence of conditions requiring Level A have not yet been determined.
Equipment and Level Criteria taken from OSHA 1910.120, Appendix B Prior to use, all equipment must be inspected to ensure proper working conditions.		

Based upon the scope of work outlined in Section 2.0 and identified hazards addressed in Section 5.0 it has been determined that Level D PPE is appropriate for all field activities. Any need to upgrade or downgrade between levels will be determined by the SHSO based on the criteria listed in Table 3.

When applicable, only PPE that meets the following American National Standards Institute (ANSI) and American Society for Testing and Materials (ASTM) standards shall be worn:

- Eye/face protection - ANSI Z87.1-2010
- Head protection - ANSI Z89.1-2009
- Foot protection - ASTM F2413-05

7.0 GENERAL FIELD ACTIVITY PROCEDURES

The sections below describe general procedures related to health and safety issues, and the prevention of illness and injuries to Site personnel.

7.1 Chemical Hazard Communication and Handling Procedures

The following procedures must be followed for chemicals brought onto the site by JHA personnel and/or subcontractors (i.e., decontamination solution, sampling preservatives, etc.) while performing the tasks of this project:

- Labels on primary chemical containers must not be defaced.
- Chemical containers must be stored in appropriate storage containers.
- Secondary containers and storage cabinets must be correctly and clearly labeled using the Hazardous Materials Identification System (HMIS).
- Chemicals incompatible with each other must not be stored together.
- Workers must receive training on the chemical hazards.
- Material Safety Data Sheets for the chemical must be added to Appendix G.

When chemicals are used on site, workers must abide by JHA's Hazard Communication Program that is the culmination of the list of procedures above and Table 4 below as required by CCR Title 8 □5194. Procedures for chemical handling are outlined in Table 4.

TABLE 4
Chemical Handling Procedures

Chemical	Description	Procedures
Acids and Bases	Extremely corrosive materials with a variety of uses Acids: Including Hydrochloric, Nitric, and Sulfuric acids Bases: Including Sodium Bicarbonate	• Wear rubber gloves and eye-splash protection while using acid dispensed from a small dropper bottle during water sampling. • Wear a full-face, air-purifying respirator equipped with combination cartridges (organic vapor/acid gas) as well as Tyvek® coveralls and nitrile and/or NBR gloves for large volume applications. • Have an eye wash bottle or portable eye wash station on-Site. • Cap all drums after dispensing chemicals. • Do not add anything into a virgin chemical drum, including unused product. • Avoid mixing strong acids and bases. Consult HSM for task-specific evaluation. If mixing is absolutely necessary, do it slowly. Avoid vapors or fumes that are generated. • When diluting acids, add the acid to water in small quantities and mix cautiously. • When mixing powdered sodium bicarbonate, always wear dust mask and goggles. (Refer to Appendix G for MSDS)
Volatile Organic Compounds	Petroleum hydrocarbons, chlorinated solvents used for fuel, lubricants, cleaning agents, degreasers, dielectric fluids, etc.	• Wear nitrile gloves and eye-splash protection while handling hazardous liquids, and at a minimum, gloves when handling contaminated soil containing these constituents. • Wear a an air-purifying respirator equipped with combination cartridges (organic vapor/acid/gas) as well as splash protection coveralls and nitrile and/or NBR gloves for large volume liquid handling or soils with VOCs near or above acceptable threshold levels. • Have an eye wash bottle or portable eye wash station on-Site. • Keep away from oxidizing agents. • Keep away from ignition sources or high temperatures. • Avoid areas not well ventilated.
Unknown Drummed Chemicals or Wastes	Unknown wastes require identification using special handling and sampling procedures	A work plan delineating procedures for sampling and handling of unidentified hazardous materials/wastes is required for safe "hazardous waste categorization". Specific "decision tree" procedures must be followed to evaluate and segregate waste during the "hazardous waste categorization" program. Wastes will be classified according to chemical incompatibilities, degree of reactivity, combustibility and flammability, radioactivity, explosivity, toxicity, and extremely hazardous materials (which will exhibit a high degree of one or more of the other characteristics).
Specialized Materials & Liquid Chemicals (See MSDS Information, Appendix I)	Various uses	See Material Safety Data Sheets (MSDSs; Appendix G) for: • "Fire and Explosion Hazard Data" • "Reactivity Data" • "Special Protection Information" • "Special Precautions"
Activated Carbon	Granular adsorbent medium used to remove residual hydrocarbons from water and/or air.	• Use respiratory protection when activated carbon creates a dusty environment. • Contact HSM for task-specific evaluation.

Anti-Scalant	Mild acid used to remove carbonate build-up	See Material Safety Data Sheet (MSDS) in Appendix G
		The chemical identified as use for removing scale (hard water deposits) is BellChem 504 which is a mild acid with a pH of 6.7 (deionized water has a pH of 7.0 and is considered neutral)
		• Avoid contact with eyes, skin and clothing.
		• Avoid breathing vapors and mists.
		• Avoid prolonged exposure.
		• Recommended PPE includes:
		  • Splash goggles and/or face shield
		  • Rubber or plastic gloves
		  • Rubber apron and boots
		• Wash thoroughly after handling

7.2 Material Spills

Spill prevention is a priority and will be accomplished by keeping equipment and material containers in proper working order, and by following proper handling procedures for all materials stored and generated on-Site. If a material spill occurs, routine work will be immediately halted to address the spilled material. Emergency/incident reporting will be followed as outlined on the Site-specific Dash Card (Appendix B) and notifying the SHSO. The SHSO will determine whether or not there is a need to call emergency response for additional assistance to contain and clean up the spill. Spills will be contained and cleaned-up by JHA personnel only if the task can be completed safely. Only those personnel who have been trained to handle hazardous materials are authorized to contain hazardous material spills. For additional information and procedures please reference Section 7.1 – Chemical Hazard Communication and Handling Procedures; Section 7.3 – Decontamination Procedures; Section 9.0 – Emergency Procedures; Section 5.0 – Hazard Identification and Control; and Appendix A – Site-Specific Emergency and Location Information.

7.3 Decontamination Procedures

Operations conducted at the Site have the potential to contaminate field equipment and personnel PPE. To prevent the transfer of contamination to vehicles, administrative offices and personnel, the decontamination procedures presented in Table 6 must be followed, if applicable.

Personnel will perform decontamination in designated and identified areas upon leaving "hot zones" where the potential exists for exposure to hazardous chemical, biological, or environmental conditions.

7.3.1 Personnel Decontamination Procedures

Remove disposable gloves and Tyvek (if required) and place in plastic bags. Wash hands and face before eating, drinking, or smoking, and at the end of the work day.

7.3.2 Decontamination Procedures for Equipment/Sampling Gear

Hand-Held sampling equipment will be washed with a detergent-water mixture and with deionized water or wet-wiped. Plastic sheeting, drums, bins, and other suitable materials shall be employed to ensure that contaminated material remains in the decontamination zone and to prevent the transfer of contaminated material outside the work area when applicable.

7.3.3 Storage of Investigation-Derived Materials (IDM)

Disposable PPE (gloves, respirator cartridges, etc.) and construction materials will be disposed of as municipal waste. Drill cuttings, purged groundwater, decontamination water, and exhausted granular activated carbon will be stored in Department of

Transportation (DOT)-approved drums or bins pending analysis for final disposal in accordance with federal and state regulations. The storage location for IDMs will be determined by each property manager.

TABLE 6
Decontamination Procedures

Item	Examples	Procedures
Field Equipment	Bailers, water meters/interface probes, hand tools, drill augers, and miscellaneous soil and water sampling equipment	• Decontaminate with a solution of detergent (preferably non-phosphate) and water; rinse with water prior to leaving the Site. • Protect from exposure by covering with disposable covers such as plastic to minimize required decontamination activities.
Disposable and Non-disposable PPE	Tyvek® suits, inner latex gloves, dust masks, respirator cartridges	• Dispose of according to the requirements of the client and state and federal agencies. • Change out respirator cartridges on a daily basis and dispose appropriately.
	Respirators	• Clean/sanitize respirator with disinfecting pad prior to donning. • Decontaminate on-Site at the close of each day with a solution of an approved sanitizing powder and water.
	Boots and gloves	• Decontaminate outside with a solution of detergent and water; rinse with water prior to leaving the Site. • Protect from exposure by covering with disposable covers such as plastic to minimize required decontamination activities.

7.4 Confined Space Entry

The extraction well vaults are classified as non-permit required confined spaces; however, all vaults will be tested with a four-gas meter to ensure an appropriate atmosphere exists prior to entry. Table 7 describes the defining characterizations in determining whether a space is to be classified as permit-required (a confined space identified with potential hazards) or a non-permit required confirmed space (a confined space that is determined to pose no harm to an employee or subcontractor). Confined space entry (CSE) is defined under CFR 29 1910.14(b). No JHA employee or subcontractor shall enter an area identified as a confined space without using the confined space entry procedures addressed in the JHA CSE Program provided as Appendix H

The purpose of the CSE procedures addressed in Appendix J is to protect employees from potentially hazardous environments and to facilitate immediate rescue in an emergency situation. Only those employees and subcontractors who have been trained as defined by

40 CFR 1910.120(b)(4)(ii)(I) and 8 CCR 5156 and 5157 may participate in CSE procedures.

If a confined space is deemed to require a permit, all procedures regarding a permit-required confined space are to be followed carefully, and a space-specific permit generated and posted at the entrance of the location. A copy of the JHA CSE Permit is provided in Appendix H.

TABLE 7
Confined Space Entry Potential Hazards and Control

	Confined Spaces
Definition	A confined space has limited or restricted means of entry or exit, is large enough for an employee to enter and perform assigned work and is not designed for continuous occupancy by the employee.
Examples	These spaces may include, but are not limited to, underground vaults, tanks, storage bins and diked areas, vessels, and silos.
Characteristics	A permit-required confined space is one that meets the definition of a confined space and has one or more of these characteristics: • Contains or has the potential to contain a hazardous atmosphere. • Contains a material that has the potential for engulfing as entrant. • Has an internal configuration that might cause an entrant to be trapped or asphyxiated by inwardly converging walls or by a floor that slopes downward and tapers to a smaller cross section. • Contains any other recognized serious safety or health hazards.
Protocol for Permit-Required CSE	• Personnel trained to conduct CSE procedures. • Perform the appropriate air monitoring activity at various depths in the space prior to entry. Monitor for (1) oxygen level, (2) flammable vapors, and (3) toxic vapors. • Ventilate the atmosphere in the space so that entry may be made safe without respiratory protection. If this is not feasible, authorized entrants and attendants must wear appropriate respiratory protection. • Wear appropriate respiratory protection when ventilation alone cannot achieve acceptable atmospheric levels of oxygen or flammable or toxic vapors. • Have appropriate retrieval equipment worn by employees in the event of a mishap.

7.5 Lockout/Tagout

The use of lockout/tagout procedures is mandatory when performing maintenance, repair or other service-related activities on any machine or equipment where unexpected startup or release of stored energy could cause injury to employees. JHA authorized employees have been instructed in proper lockout/tagout procedures and are trained in the following:

- Recognition of hazardous energy;
- Type and magnitude of energy found in the workplace;
- The means and methods of isolating and/or controlling energy; and

- The means of verification of effective energy control, and the purpose of the procedures to be used.

Authorized employees will be re-trained, as needed; i.e., when there is a change in employee job assignments, when a new hazard is introduced due to a change in machines, equipment or processes, when there is a change in the energy control procedures, or when periodic inspections reveal inadequacies in company procedure, etc. Energy Assessment Forms, Machine Lockout Procedure Forms, and information for performing lockout/tagout procedures at the Site are located in Appendix I.

7.6 Fall Protection

JHA's fall protection program establishes guidelines to protect all employees engaged in outdoor or indoor work activities that expose them to potential falls from elevations. The scope of this fall protection program includes all agency/institutional buildings and staff. In particular those staff engaged in work activities, which expose them to falls from heights of 4 feet or more.

The goal of this Fall Protection Program is to prevent the occurrence of falls from elevations of 4 feet or higher. This goal will be accomplished through effective education, engineering and administrative controls, use of fall protection systems, and enforcement of the program. This fall protection program will be continually improved upon to prevent all falls from occurring. The Fall Protection Program and applicable inspection forms are located in Appendix J.

7.7 Heat Illness Prevention

Since the field activities described in Section 2.0 involve working outside, heat-related illness is a potential hazard to personnel depending on the time of year and the task being performed. Local weather conditions may produce an environment in which work schedules will require to be restricted in order to protect Site personnel. The type and degree of protective equipment worn and used can also be a significant factor affecting the ability of personnel to deal with heat stress (see Section 6.0 for complete descriptions of PPE). Guidelines related to heat illness prevention in outdoor places of employment are set forth in CCR Title 8 §3395 and JHA's Heat Illness Prevention Program, June 2013 (Appendix K). General guidelines related to heat illness prevention are listed below; refer to Appendix K for an expanded discussion.

7.7.1 Heat-Related Illness Prevention

1. **Provide plenty of fluids:** Where the supply of water is not plumbed or continuously available, water will be provided in sufficient quantity to provide, at a minimum, four (4) cups per employee per hour, per the requirements set forth in CCR Title 8 §3395 (c).

2. **Work in pairs:** The buddy system will ensure that all workers are at least being monitored on a visual basis.

3. **Provide cooling devices:** If a worker begins to exhibit heat-related symptoms, immediately remove the worker from the area and tale to a shaded or air conditioned break area. Ice vests or on-Site showers can be provided to reduce body temperature and/or cool protective clothing.

4. **Adjustment of work schedule:** When practicable, the most labor-intensive tasks should be performed during the coolest part of the day.

5. **Shaded or cooled rest areas:** A shaded/open air area will be provided for workers who begin to exhibit early stages of heat-related illness for a period of no less than five (5) minutes per the requirements set forth in CCR Title 8 §3395 (d).

7.8 Cold Stress Procedures

Since the field activities described in Section 2.0 involve working outside, cold stress is a possible hazard to personnel depending on the time of year and the work being performed. Local weather conditions may produce an environment in which work schedules will require to be restricted in order to protect employees.

7.8.1 Cold Stress Monitoring

Oral temperature monitoring of Site personnel in cold stress environments will be initiated when any of the following requests or observations are made:

- Any changes in a worker's performance or mental status;
- At a worker's request;
- Under unusually hazardous conditions (e.g., wind-chill less than 20ºF, or wind-chill less than 30ºF with precipitation); and/or
- Whenever any worker on-Site develops symptoms of hypothermia.

Workers developing minor hypothermia (a core temperature of 92ºF) should not return to work for at least 48 hours. The clinical symptoms of hypothermia in relation to core body temperature are listed in Table 8.

TABLE 8
Progressive Clinical Symptoms of Hypothermia

Core Temperature (ºF)	Symptoms
98.6	Normal rectal temperature
96.8	Metabolic rate increases
95.0	Maximum shivering
93.2	Victim conscious and responsive
91.4	Severe hypothermia
89.6 - 87.8	Consciousness clouded, blood pressure difficult to obtain, pupils dilated but react to light, shivering ceases
86.0 - 84.2	Progressive loss of consciousness, muscular rigidity increases, pulse and blood pressure difficult to get, respiratory rate decreases
78.8	Victim seldom conscious
64.4	Lowest accidental hypothermia victim to recover

7.8.2 Recognition and Treatment

Recognition of cold stress-related illnesses is fundamental in the protection of Site personnel during extremely cold weather. Systemic cold exposure is referred to as hypothermia. Localized cold exposure is generally labeled as frostbite.

A. <u>Hypothermia</u>

Cause: Decrease in body core temperature below 96ºF. The body temperature is normally maintained by a combination of central (brain and spinal cord) and peripheral (skin and muscle) activity. Interferences with any of these mechanisms can result in hypothermia, even in the absence of what normally is considered "cold" ambient temperatures.

Symptoms: Shivering, apathy, listlessness, sleepiness, and unconsciousness.

Treatment: Move worker to an enclosed area (building or vehicle), remove any wet clothing, dry skin, warm torso slowly using body heat, wrap in blankets, and seek medical attention immediately.

B. <u>Frostbite</u>

Cause: A general and medical term given to areas of local cold related injuries. Unlike systemic hypothermia, frostbite rarely occurs unless the ambient temperatures are less than freezing.

Symptoms: Sudden blanching or whitening of the skin; the skin has a waxy or white appearance and is firm to the touch; tissues are cold, pale, and solid.

Treatment: Move worker to an enclosed area (building or vehicle), dry affected area and warm slowly, cover with dry clothing or blanket, and seek medical attention immediately.

7.8.3 Cold Stress Prevention

Prevention of cold-related illnesses can be aided by educating Site personnel on recognizing the symptoms of frostbite and hypothermia, and by identifying and limiting known risk factors. When a cold work environment exists, personnel will be provided with enclosed, heated environments on or adjacent to the Site, and provided dry changes of clothing, and warm drinks.

In order to minimize the risk of the hazards of working in cold environments, workers will be trained and periodically reinforced in the recognition of the physiologic responses of the body to cold stress. In addition, the use of insulated work clothing, warm shelters and work/warming regimens may be used to minimize the potential hazards of cold stress. Also, special attention will be paid to equipment warm-up time and freeze protection for vessels, piping, equipment, tools, and walking/working surfaces.

7.9 Noise Handling Procedures

Evidence is well established that worker exposure to sound of sufficient intensity and duration can result in hearing damage and/or loss, as well as mental stress. OSHA requirements mandate that a hearing conservation program be implemented whenever employee sound exposures equal or exceed a time-weighted average (TWA) sound level of 85 decibels (dB) within an eight-hour work shift. The program description below prescribes measures required to prevent employee exposure to excessive sound levels and includes provisions for the following:

- Monitoring and documentation of noise levels in the workplace to determine employee exposures;
- Communication with exposed personnel regarding the results of noise monitoring;
- Administrative controls can be implemented by reducing the amount of time personnel are exposed to noise and creating a greater distance between personnel and noise sources;
- Implement engineering controls such as enclosures and barriers to minimize noise levels;
- An audiometric testing program, given during baseline and annual physical examinations; and
- Provide hearing protection to all personnel when noise levels meet or exceed the action levels described in Table 9.

Monitoring of employee exposures to sound will be conducted whenever it is anticipated that exposure may exceed the action level. Employees will take precautionary measures to

protect themselves from excessive noise levels by using earplugs and/or earmuffs. Noise monitoring levels are presented in Table 9.

TABLE 9
Noise Monitoring Levels

Instrument	Measurement	Action
Type I or II SLM (Sound Level Meter)	> 80dB (A) – 85 dB (A)	Hearing protection recommended. Limit work duration to 8- hour shifts.
	> 85dB (A) – 90 dB (A)	Hearing protection required. Limit work duration to 8- hour shifts. Post signs.
	> 90dB (A) – 115 dB (A)	Hearing protection required. Investigate use of engineering controls. Limit work duration to 8-hour shifts. Post signs.
	> 115	Stop work. Contact HSM and PM. Engineering controls required within this threshold.

7.10 Air Monitoring Procedures

If monitoring of workspace air is required for VOCs, such monitoring will be based on known contaminants affecting soil, soil vapor, and groundwater at the Site (addressed at the end of Section 5.0), workspace air monitoring may be requested to be performed utilizing a Photoionization Detector (PID) for the measurement of volatile organic vapor concentrations in parts per million by volume (ppmV). All readings will be taken in the worker's breathing zone to determine whether an action level has been met and/or exceeded. The breathing zone is defined as the area within one foot of personnel's mouth and nose. Transient peaks will not automatically trigger action. Readings must be sustained for five minutes to initiate an upgrade in PPE Level. The action levels that apply to all tasks performed at the Site are presented in Table 10.

TABLE 10
Air Monitoring Action Levels

Instrument*	Function	Measurement	Action Levels
Photoionization Detector (PID) (readings are sustained for 5 minutes)	Measures total organic vapors	0 – 5 ppmv	Level D required.
		≥ 5 ppmv	Wear respirator.
		≥ 50 ppmv	Stop Work. Evacuate the area. If upon return, levels still exceed 5 ppm, engineering controls must be implemented. Contact PM and HSM for guidance.
* = Instrument must be calibrated according to manufacturer's recommendations prior to initiation of fieldwork utilizing isobutylene or hexane calibration gas as directed.			

The known contaminants at the Site are presented in table form in the Constituents of Concern (COCs) section of Appendix A. This table addresses the Cal/OSHA, NIOSH, and the OSHA worker exposure limits to the specific COCs in air and should be used in conjunction with Table 10 (above) as conservative guidelines for workspace air quality.

In extreme conditions, engineering controls such as the venturi air mover (supplied by compressed air) can be utilized to exhaust or dilute vapors emanating in the workspace as a means to lower concentrations, therefore reducing the action level during operations.

Table 11 outlines the requirements when using an explosimeter and oxygen meter, typically for confined spaces.

TABLE 11
Air Monitoring Readings and Actions

Instrument	Unit Measurement	Reading	Action Levels
Explosimeter	% LEL	1 to 10	Continue with caution
		>10	Stop Work. Evacuate the area. If upon return, if concentration still exceeds 10% LEL, ventilate until concentration is back to <10% LEL.
Oxygen Meter	%	<19.5	Stop work. Evacuate the area
		19.5 to 23.5	Continue to work with caution
		>23.5	Stop work. Evacuate the area
LEL = lower explosive limit			

When required air monitoring readings will be recorded on the air monitoring form provided in Appendix N.

7.11 Specific Field Activity Procedures

Some activities at the site require specific procedures due to inherent dangers. Table 12 below lists these activities as well as outlines the necessary safety procedures and required PPE.

TABLE 12
Specific Field Activity Procedures

Activity	Procedures	PPE
Extraction well vault entry	1. Extraction well and injection well vaults have been identified as non-permit required confined spaces. Please refer to Section 7.2 and Appendix J for specific confined space entry procedures. If evaluation indicates that these are permit confined spaces then it will be documented as such. 2. Use the buddy system. 3. Wear traffic safety vest when vehicle hazard exists. 4. Use cones, flags, barricades, and caution tape to define work area. 5. Use vehicle to block work area, if applicable. 6. Implement a traffic control plan for high-traffic situations.	Level D consisting of safety glasses, hard hat. Steel-toed boots and gloves.
Temporary guarding of moving blower belt components when blower enclosure is open	1. Lockout/tag out all associated equipment. 2. Place delineators in front of the blower belt to create a safety work zone. 3. Use buddy system.	Level D consisting of safety glasses, hard hat. Steel toed boots and gloves.

8.0 SITE AND WORK ZONE CONTROL

8.1 Site Security and Entry

Access to the Site is controlled by *de maximis*. All off-Site access agreements and arrangements will be handled by *de maximis*. JHA personnel will undertake Site access in accordance with *de maximis'* access control procedures. *de maximis* will have the overall responsibility of the Site's security during periods of on-going activities. Access to the work zone for field personnel and visitors will be controlled by the SHSO.

8.2 Work Zones

Work zones will be established in order to:

- Delineate high-traffic locations that do not require traffic control;
- Identify hazardous locations so appropriate safety, monitoring, and engineering controls can be implemented; and
- Contain contamination within the smallest area possible.

Employees entering the work zone must wear the proper PPE for that area (Section 6.0). Work and support areas will be established based on ambient air monitoring (Section 7.10), necessary security measures, and Site-specific conditions. Examples of Site security and work zones are provided in Table 13.

TABLE 13
Site Security and Work Zone Examples

WORKING IN STREET OR ROADWAY • Wear traffic vest and hardhat when vehicle hazard exists. • Use cones, flag-mounted cones, caution tape and/or barricades. • Use vehicle strobe light and block entry to the area with truck. • Develop a control plan for high traffic situations: use flag person, use flashing arrow sign, use "MEN WORKING" signs liberally, obtain lane closure and/or encroachment permits.
AIRKNIFE FOR UTILITY CLEARANCE • Work shall comply with Cal/OSHA T8, CCR, Ch. 4, Subch. 4, Article 6 “Excavations” • "Competent Person" is required per CCR, T8, 1541. • Safeguard open excavations by restricting unauthorized access. • Highlight work area using prominent warning signs (cones, barricades, and/or signage) placed a minimum of 10' back from excavation opening. • Maintain zone definition along perimeter with continuous string of yellow/orange caution tape • Daily inspections of excavations and adjacent areas will be performed by a “competent person” for evidence of sloughing, unstable soils or possible cave-ins.
AIRKNIFE OR BORE HOLES LEFT UNATTENDED OR OVERNIGHT • Surround entire perimeter with plastic or cloth construction net fencing. Space out posts no greater than 8 feet apart. Fence height minimum 4 feet high. Fence material must be of a quality capable of withstanding a pressure of 200 pounds.
SOIL CUTTING, GROUNDWATER AND DECON WASTE STAGING AREA • Delineate a staging area isolated from nearby occupied dwellings and unauthorized personnel. The area must be large enough to accommodate the volume of wastes with ample space for their segregation. • Strategically place signage, cones/barricades, and caution tape to identify the waste area. • All drums and bins are to be appropriately labeled with content description, waste generation location and date.

The SHSO may designate work zone areas based on elevated hazard levels. The following categories describe each work zone area:

- ***Work/Exclusion Zone***

  The Work/Exclusion Zone is the innermost of three concentric areas and is the zone where contamination is known to or could occur. All personnel entering the Work/Exclusion Zone will wear the prescribed Level of PPE.

  Check point for entry and exit will be established at the periphery of the Work/Exclusion Zone to regulate the flow of personnel and equipment into and out of the Zone and to verify that established entry and exit procedures are followed. The boundary of the Work/Exclusion Zone will be determined by the area necessary to conduct the activities and the potential for contaminants to be blown or splashed during the activities. When this boundary is determined, it will be marked and only individuals approved by the SHSO can enter this Zone. During subsequent Site operations, the boundary may be modified/adjusted as additional information becomes available.

- ***Equipment Decontamination and Contaminant Reduction Zones***

An Equipment Decontamination Zone must be established for each Work/Exclusion Zone. It may be part of the Work/Exclusion Zone, outside of the Zone, or both. Equipment that must be decontaminated before being reused in a Work/Exclusion Zone must be decontaminated within the Equipment Decontamination Zone. Heavy equipment will be initially decontaminated in the Contamination Reduction Zone (located within the Work/Exclusion Zone), near the boundary of the Equipment Decontamination Zone before leaving the controlled area. Final decontamination for heavy equipment will take place in the Equipment Decontamination Zone. PPE worn in the Work/Exclusion Zone must also be worn in the Equipment Decontamination Zone.

One or more zone shall be designated for personnel decontamination, which will be required before rest breaks, meal breaks, leaving the Site at the end of the work shift and entering the support zone to coordinate activities with other personnel.

Decontamination procedures are presented in Section 7.3.

- ***Support Zone***

  The Support Zone is a clean area where support equipment and facilities are located. The support zone will be situated upwind of the Work/Exclusion Zone.

9.0 EMERGENCY PROCEDURES

Standard emergency procedures to be used by on-Site personnel are presented in Table 14 and on the site specific "Dash Card", presented in Appendix B. The SHSO shall be notified of any on-Site emergencies and will be responsible for ensuring that the appropriate procedures are followed.

In the event of an occupational injury or illness that occurs to JHA or subcontractor personnel while completing work on- or off-Site, the PM and/or HSM will notify the Client immediately. It is the SHSO's responsibility to record all incidents and near misses that have or could have led to an injury or illness. A copy of the health and safety incident report form is provided in Appendix M. Filed incident reports will be kept with the on-Site copy of this Site-Specific HASP for record.

TABLE 14
Emergency Procedures

Situation	Action
Evacuation	1. The SHSO will immediately notify all on-Site personnel of an emergency requiring evacuation. 2. Leave the dangerous area and report to a designated rally point (covered in daily "tailgate" meeting). 3. The SHSO will notify emergency services, as necessary. 4. Account for all personnel. 5. Contact the PM and the HSM as soon as possible. 6. Maintain Site security and control measures for community safety until emergency responders arrive. 7. Document the incident using the health and safety incident report form (Appendix M).
Medical Emergency	1. Survey the situation: **Do not enter an area that may jeopardize your safety:** • Establish the patient's level of consciousness. • Ascertain/evaluate condition of patient. • Call for help. • Contact Emergency Medical Services and inform them of victim's condition, and inform that victim is contaminated, if appropriate. 2. Primary Assessment (patient unconscious) **Only trained personnel should perform CPR or First Aid:** • Response • Airway • Breathing • Circulation 3. Secondary Assessment (patient conscious): • Check for bleeding: Control with direct pressure. • Do not move patient (unless location is not secure). • Monitor vital signs. • Provide first aid to the level of your training. • Contact the PM and the HSM as soon as possible. • Document the incident using the health and safety incident report form (Appendix M).
Fire Emergency	1. Evacuate the area. 2. Notify the Emergency Services 3. Extinguish small fires with an all-purpose extinguisher. 4. Contact the PM and HSM. 5. Document the incident using the health and safety incident report form (Appendix M).
Spill/Release	Prevent problems by documenting the location of underground lines (e.g. product, electrical, gas, transmission, water, sewer, telephone) before implementing Site work (utility clearance). If damage to a line or a tank or another leak occurs, document the spill/release in writing utilizing the health and safety incident report form (Appendix M). Include dates, times, actions taken, agreements reached and names of people involved. In the event of a spill/release. Follow the plan outlined below: 1. Wear appropriate PPE; stay upwind of the spill/release. 2. Turn off equipment and other sources of ignition. 3. Turn off pumps and shut valves to stop the flow/leak. 4. Plug the leak or collect drippings in a bucket, when possible. 5. Place sorbent pads to collect product, if possible. 6. Call the local Fire Department (information provide in Appendix A) immediately if fire emergency develops. 7. Inform JHA PM and HSM about the situation. 8. Determine if client wants JHA to repair the damage of if the client will use an emergency repair contractor. 9. Based on agreements, contact emergency spill contractor for containment of free product. 10. Advise the client of spill discharge notification requirements and determine who will complete and submit forms. Do not submit or report to agencies without the client's consent. Document each interaction with the client and regulators and note, in writing: name, title authorizations, refusals, decisions, and commitments to actions using the health and safety incident report form (Appendix M). 11. Do not transport or approve transportation of contaminated soils or product until proper manifests have been completed and approved. Be aware that soils/product may meet criteria for hazardous waste. 12. Do not sign manifests as generator of wastes; contact the regional compliance manager to discuss waste transportation.
Notifications - a spill/release requires completion of the health and safety incident report form and Class III notification. The Project Manager must contact the client or generator. The generator is under obligation to report to the proper government agencies. If the spill extends into waterways, the Coast Guard and the National Response Center (1-800-424-8802) must be notified immediately by the Client or with his/her permission.	

10.0 DIR AND OSHA DOCUMENTATION

California Department of Industrial Relations (DIR) documentation is posted at each JHA office location (Irvine and Simi Valley) and is also provided in Appendix N.

APPENDIX A
SITE-SPECIFIC EMERGENCY INFORMATION

SITE-SPECIFIC EMERGENCY INFORMATION
PROJECT HEALTH AND SAFETY PLAN

Do not endanger your own life!
Survey the situation before taking any action.

SITE INFORMATION

Site Name:	Former Omega Chemical Facility
Site Location:	12520 East Whittier Boulevard, Whittier, California
Site Description:	Former Chemical Facility
Project Schedule:	Continuing OMM Operations

TASK DESCRIPTIONS

This Site-specific HASP has been prepared by JHA to perform operation, maintenance, and monitoring (OMM) of the OU-1 Soil Vapor Extraction (SVE) System, the Administrative Settlement Agreement and Order on Consent (AOC) SVE System, and the Groundwater Containment System (GWCS) Treatment Systems, and related tasks. This Site-Specific HASP addresses the safety issues associated with the Site and involves the following project-specific tasks:

- Routine OMM of all Systems:
    - Weekly OMM of the OU-1 SVE, AOC SVE, and GWCS Systems;
    - Monthly and quarterly sampling of soil vapor and groundwater; and
    - Additional Non-Routine OMM of the OU-1 SVE, AOC SVE, and GWCS Systems, as directed.
- Additional related tasks may include:
    - Oversight of carbon change-outs;
    - Assisting in various aspects of soil vapor and groundwater extraction well maintenance; and
    - System construction and modifications oversight.

HAZARD DETERMINATION

Serious _____ Moderate _____ Low **X**

LEVEL OF PERSONAL PROTECTION EQUIPMENT (PPE) REQUIRED

The following table outlines the individual levels of PPE, the required equipment, and the criteria for each level. Based on the task descriptions listed above, the applicable PPE level during normal OMM conditions and Site-specific tasks is Level D (highlighted below). Any need to upgrade or downgrade between levels will be determined by the SHSO based on the criteria listed below:

Level	Required Equipment	Criteria
Level D (lowest)	• Steel-toed boots • Approved safety glasses or goggles • Hard hat (if overhead threat is present) • Orange or yellow safety vests are required for all on-Site work and when vehicular traffic is in or adjacent to the work area • Nitrile gloves for vapor, soil, and water sample collection, and decontamination handling • Ear protection	• When there is no known atmospheric hazard; • When there is no potential for unexpected inhalation of or contact with hazardous levels of any chemicals; and • The scope of work precludes liquid splashes or immersion.
Modified Level D	• Level D plus the following • Chemical-resistant (acid or solvent) boot covers • NBR outer and nitrile inner gloves. • Face shield/goggles if splash hazard is present	• Same as Level D with the addition of known chemical handling that does not pose an inhalation hazard.
Level C	• Modified Level D plus the following • Full or half face, NIOSH-approved, air purifying respirator with organic vapor/acid gas cartridges • Hooded PE-coated Tyvek® suit	• When atmospheric contaminants, liquid splashes, or other direct contact will not adversely affect or be absorbed through may exposed skin; • When the types of air contaminants have been identified, concentrations measured, and an air-purifying respirator is available that can remove the contaminants; and • All criteria for the use of air-purifying respirators are met.
Level B	• Modified Level D plus the following • NIOSH/MSHA-approved full-face positive pressure, demand, supplied air respirator, either airline or self-contained. • Chemical resistant (acid or solvent) boot covers (if required) • Hooded PE-coated Tyvek® suit	• When the type and atmospheric concentration of substances have been identified and requires a high level of respiratory protection, but less skin protection; • When the atmosphere contains less that 19.5% oxygen; or • When the presence of unidentified vapors or gases is indicated by PID, but vapors or gases are not suspected of containing high levels of chemicals harmful to skin or capable of being absorbed through the skin.
Level A (highest)	• Modified Level D plus the following • NIOSH/MSHA-approved full-face, positive pressure, demand, supplied air respirator, either airline or self-contained. • Totally-encapsulating chemical-protective suit	• When a hazardous substance has been identified and requires the highest level of protection for skin, eyes, and the respiratory system based on either the measured (or potential for) high concentration of atmospheric vapors, gases, or particles; or operations involve a high potential for splash, immersion, or exposure to unexpected vapors, gases or particulates of materials that are harmful to skin or capable of being absorbed through the skin; • When substances with a high degree of hazard to the skin are known or suspected to be present, and skin contact is possible; or

Level	Required Equipment	Criteria
		• When operations must be conducted in confined, poorly ventilated areas, and the absence of conditions requiring Level A have not yet been determined.
Equipment and Level Criteria taken from OSHA 1910.120, Appendix B Prior to use, all equipment must be inspected to ensure proper working conditions.		

CONSTITUENTS OF CONCERN

The following table presents information regarding the constituents of concern (COCs) for the Site and the worker exposure limits related to those contaminants in air as mandated by the California Division of Occupational Safety and Health (Cal/OSHA), National Institute for Occupational Safety and Health (NIOSH) and the Federal Occupational Safety and Health Administration (OSHA). It should be noted that the individual contaminants are found at varying concentrations within groundwater, soil, and/or soil vapor matrices at the Site, and are not handled individually as chemical substances. The exposure limits listed below should be used as conservative guidelines when monitoring ambient, workspace air during normal operations and/or to gauge potentially hazardous conditions to ensure worker safety.

CAS NUMBER	CHEMICAL NAME (bold) & SYNONYMS	EXPOSURE LIMITS			LEL (%)	IP (eV)	POTENTIAL EXPOSURE SYMPTOMS
		NIOSH RELs (ppmV)	OSHA PELs (ppmV)	Cal/OSHA PELs (ppmV)			
75-69-4	**Fluorotrichloromethane**, Freon® 11, Monofluorotrichloromethane, Refrigerant 11, Trichlorofluoromethane, Trichloromonofluoromethane	C 1,000	TWA 1,000	C 1,000	NA	11.77	incoordination, tremor; dermatitis; cardiac arrhythmias, cardiac arrest; asphyxia; as a liquid: frostbite
76-13-1	**1,1,2-Trichlooro-1,2,2-trifluoroethane**, Chlorofluorocarbon-113, CFC-113, Freon® 113, Genetron® 113, Halocarbon 113, Refrigerant 113, TTE	TWA 1,000 ST 1,250	TWA 1,000	1,000 C 2,000 ST 1,250	NK	11.99	irritation skin, throat, drowsiness, dermatitis; central nervous system depression; in animals: cardiac arrhythmias, narcosis
75-35-4	**Vinylidene chloride**, 1,1-DCE; 1,1-Dichloroethene; 1,1-Dichloroethylene; VDC; Vinylidene chloride monomer; Vinylidene dichloride	Ca	none	1	6.5	10.00	irritation eyes, skin, throat; dizziness, headache, nausea, dyspnea (breathing difficulty); liver, kidney disturbance; pneumonitis; [potential occupational carcinogen]
79-01-6	**Trichloroethene**, Ethylene trichloride, TCE, Trichloroethylene, Trilene	Ca	TWA 100 C 200* *5-minute maximum peak in any 2 hours of 300 ppmV	25 C 300 ST 100	8	9.45	irritation eyes, skin; headache, visual disturbance, lassitude (weakness, exhaustion), dizziness, tremor, drowsiness, nausea, vomiting; dermatitis; cardiac arrhythmias, paresthesia; liver injury; [potential occupational carcinogen]
127-18-4	**Tetrachloroethene**, PCE, Perchloroethylene, Perk, Tetrachlorethylene	Ca	TWA 100 C 200* *for 5 minutes in any 3-hour period with a maximum peak of 300 ppmV	25 C 300 ST 100	NA	9.32	irritation eyes, skin, nose, throat, respiratory system; nausea; flush face, neck; dizziness, incoordination; headache, drowsiness; skin erythema (skin redness); liver damage; [potential occupational carcinogen]
75-34-3	**1,1-Dichloroethane**, 1,1-DCA, Asymmetrical dichloroethane; Ethylidene chloride; 1,1-Ethylidene dichloride	TWA 100	TWA 100	100	5.4	11.06	irritation skin; central nervous system depression; liver, kidney, lung damage

CAS Number – Chemical Abstracts Service registry number
Chemical Name – In bold as found in the OSHA General Industry Air Contaminants Standard
ppmV – parts of gas or vapor per million parts of air by volume
NIOSH RELs – National Institute for Occupational Safety and Health (NIOSH) recommended exposure limits (RELs) in ppmV where: "TWA" indicates a time-weighted average (TWA) concentration for up to a 10-hour workday during a 40-hour workweek; "ST" indicates a short-term exposure limit (STEL) which should not be exceeded in a 15-minute TWA at any time during a workday; "C" indicates a ceiling value that should not be exceeded at any time and may; and "Ca" indicates a NIOSH potential occupational carcinogen (reference NIOSH Pocket Guide to Chemical Hazards accessed at http://www.cdc.gov/niosh/npg/ last updated November 22, 2010).
OSHA PELs – Occupational Safety and Health Administration (OSHA) permissible exposure limits (PELs) in ppmV where: "TWA" indicates a time-weighted average (TWA) concentration that must not be exceeded during any 8-hour workshift of a 40-hour workweek; "ST" indicates a short-term exposure limit (STEL) measured over a 15-minute period; and "C" indicates a ceiling value that should not be exceeded during any part of the day and may include special criteria which is noted below the limit value (reference NIOSH Pocket Guide to Chemical Hazards accessed at http://www.cdc.gov/niosh/npg/ last updated November 22, 2010).
Cal/OHSA PELs – California Division of Occupational Safety and Health permissible exposure limits (PELs) in ppmV where: the given value indicates the time-weighted average (TWA) concentration not to be exceeded in an 8-hour workday; "ST" indicates a short-term exposure limit (STEL) which should not be exceeded in a 15-minute TWA at any time during a workday; and "C" indicates a ceiling value that should not be exceeded at any time (reference California Code of Regulations (CCR) Title 8 5155, Table AC-1).
LEL – lower explosive (flammable) limit in air expressed as a percentage by volume
IP – ionization potential in electron volts (eV) given in this table as a guideline for the selection of a photoionization detector (PID) lamp used during monitoring
NA – not applicable
NK – not known
Material safety data sheets (MSDSs) for all COCs are presented in Appendix G.

AIR MONITORING ACTION LEVELS

The following table should be utilized, when warranted, to determine the appropriate action level for any Site tasks requiring air monitoring by a Photoionization Detector (PID) for the measurement of volatile organic vapor (VOC) concentrations in parts per million by volume (ppmV):

Instrument*	Function	Measurement	Action Levels
Photoionization Detector (PID) (readings are sustained for 5 minutes)	Measures total organic vapor concentration	0 – 5 ppmV	Level D required.
		≥ 5 ppmV	Wear respirator.
		≥ 50 ppmV	Stop Work. Evacuate the area. If upon return, levels still exceed 5 ppmV, engineering controls must be implemented. Contact PM and HSM for guidance.
* = Instrument must be calibrated according to manufacturer's recommendations prior to initiation of fieldwork.			

EMERGENCY PROCEDURES

1. Survey the situation. **Do not endanger your own life or the lives of others.**
2. **IMMEDIATELY** call **911** for assistance. Explain the physical injury, chemical exposure, fire, or substance release.
3. Decontaminate the victim without delaying life-saving procedures.
4. If the victim's condition appears to be non-critical, but seems to be more severe than minor cuts, he/she should be transported to the nearest hospital by trained Emergency Medical Services (EMS) personnel. Let the medical professional assume the responsibility for determining the severity of the injury. If the condition is obviously serious, EMS must transport the victim.

Notify the Project Manager and the Health and Safety Manager. Complete the JHA health and safety incident report (Appendix J) within 24 hours.

EMERGENCY PHONE NUMBERS

Civil Services	Telephone Numbers	
	Emergency	Non-Emergency
Los Angeles County Fire Department	**911**	(323) 881-2411
Whittier Police Department	**911**	(562) 945-8250
Los Angeles County Sheriff's Department	**911**	(323) 267-4800
Presbyterian Intercommunity Hospital	-	(562) 698-0811
California Poison Action Line	**(800) 222-1222**	
National Response Center (environmental emergencies)	**(800) 424-8802**	
Underground Utility Inquires (before digging)	-	811
Site Contacts	**Telephone Numbers**	
	Office	**Alternate**
JHA Project Manager – Trent Henderson	(949) 453-1045	(714) 656-7100
JHA Site Safety Officer – Khalid Azhar	(949) 453-1045	(714) 474-7802
JHA Health & Safety Manager – Greg Gibbs	(949) 453-1045	(714) 719-6856
de maximis Project Manager – Ed Modiano	(619) 546-8377	(619) 991-9074
de maximis Project Manager – Jaime Dinello	(949) 679-9290	(562) 756-8149
CDM Project Manager – Will Weaver	(949) 930-7265	(949) 322-9339

HOSPITAL INFORMATION, DRIVING DIRECTIONS, AND MAP

Presbyterian Intercommunity Hospital
12401 Washington Boulevard
Whittier, California 90602
(562) 698-0811

From 12520 East Whittier Boulevard (Site) A
Head southeast on East Whittier Boulevard
Turn right at Washington Boulevard
Arrive at Presbyterian Intercommunity Hospital B

EMERGENCY FIRST AID

Cardiopulmonary Resuscitation (CPR)	1. Only certified personnel are allowed to administer CPR; 2. Call **911** immediately for medical assistance; 3. Response: Check for consciousness; 4. Perform chest compressions at a rate of 100 to 120 per minute; 5. Continue chest compressions until physically unable or when medical personnel arrive and take over.
Bleeding	1. Give medical statement; 2. Assure airway, breathing, and circulation functions; 3. Use DIRECT PRESSURE over the wound with clean dressing or your hand (use non-permeable gloves); 4. Bleeding from an artery or several injury sites may require DIRECT PRESSURE on a PRESSURE POINT. Use pressure points for 30 - 60 seconds to help control severe bleeding; 5. Seek medical attention immediately.
Ingestion	1. **DO NOT INDUCE VOMITING**; 2. Call Poison Control - follow any instructions given; 3. Administer CPR if necessary (see above); and 4. Seek medical attention immediately
Inhalation	1. Remove person from exclusion zone; 2. Administer CPR if necessary (see above); and 3. Seek medical attention immediately.
Skin Contact	1. Brush off dry material; 2. Remove wet or contaminated clothing; 3. Flush skin thoroughly with water; and 4. Seek medical attention immediately.
Eye Contact	1. Flush eyes with water for 15 minutes; and 2. Seek medical attention immediately.

APPENDIX B
SITE-SPECIFIC DASH CARD

STANDARD HEALTH & SAFETY PRACTICES

Former Omega Chemical Facility
12520 East Whittier Boulevard, Whittier, California 90602

- Standard health and safety practices for the Site are clearly outlined in the Site-Specific Health and Safety Plan (HASP) (JHA, 2018).
- Health and Safety is the **NUMBER ONE PRIORITY.**
- Health and Safety is **my** responsibility.
- Regulatory compliance is Mandatory – No work will begin and/or all work will immediately stop unless the answer to the following question is a positive "YES" – AM I IN COMPLIANCE WITH ALL REGULATORY, FACILITY AND HEALTH AND SAFETY REQUIREMENTS?
- All incidents and regulatory inspections must be reported immediately:
    - **Incident definition:** *Any event, condition, or action (including near misses) that affects the safety of personnel, does not follow rules and guidelines for work implementation and regulatory compliance onsite.*
    - Incident examples:
        - Spilled liquid in an uncontrolled environment.
        - Working without correct/completed permit in place.
        - Performing hot works without a "Hot Works Permit".
- Review Health and Safety Plan prior to performing work.
- Perform Health and Safety "Tail Gate Meeting" and fill out form prior to starting work.
- Calibrate monitoring equipment and log calibration in calibration log book prior to performing work.
- Review scope of work documents, permits, and other related items prior to performing work.
- Provide correct Personal Protective Equipment (PPE) for the work to be performed.
- **IF YOU ARE UNSURE OF SAFETY PRACTICES FOR THE PARTICULAR WORK INVOLVED – GET CLARIFICATION PRIOR TO STARTING WORK.**
- Working with subcontractors:
    - Review Health and Safety plan with the subcontractor.
    - Review site "Incident Reporting Procedures".
    - Perform a "Tail Gate Safety Meeting" with subcontractors.

SAFETY AND REGULATORY COMPLIANCE IS MY PRIORITY AND I MUST TAKE THE NECESSARY STEPS TO PROVIDE THIS SERVICE

I AM RESPONSIBLE AND I HAVE THE AUTHORITY TO STOP WORK IF THE TASK DOES NOT MEET SAFETY AND REGULATORY REQUIREMENTS

THE HOSPITAL ROUTE MAP IS LOCATED ON THE BACK OF THIS CARD.

JHA ENVIRONMENTAL

EMERGENCY/INCIDNET REPORTING PROCEDURES

Former Omega Chemical Facility
12520 East Whittier Boulevard, Whittier, California 90602

EMERGENCY PHONE NUMBER: 911

EMERGENCY: AN UNCONTROLLED SITUATION, AN INJURY THAT IS MAJOR OR LIFE THREATENING, A FIRE, OR ANYTHING THAT REQUIRES IMMEDIATE ASSISTANCE.

INCIDENT: ANY EVENT, CONDITION, OR ACTION (INCLUDING NEAR MISSES) THAT AFFECTS THE SAFETY OF PERSONNEL AND/OR DOES NOT FOLLOW RULES AND GUIDELINES FOR WORK IMPLEMENTION. A REGULATORY COMPLIANCE INSPECTION.

EMERGENCY REPORTING:

1. Contact emergency response at 911. Note that 911 calls made with a cellular phone may be connected to the Highway Patrol. Highway Patrol does not have automatic location ability. YOU MUST PROVIDE THE LOCATION.
2. Follow Incident Reporting procedures listed below. Use correct site address when referencing emergencies.
3. Provide the following information to the operator:
   Date: The date the incident occurred.
   Time: The approximate time the incident occurred.
   Specific Location: Where the incident occurred. Provide address.
   Description: Describe briefly what happened and what it may affect.

INCIDENT REPORTING:
Respond to the incident and get it under control. Once the incident is under control, the following **MUST BE COMPLETED:**

1. Contact the following by e-mail and brief phone message (**MUST DO BOTH**):

Name	E-mail	Phone Number
Ed Modiano (*de maximis*)	emodiano@demaximis.com	Cell: (619) 991-9074
Jaime Dinello (*de maximis*)	jdinello@demaximis.com	Cell: (562) 756-8149
Trent Henderson (JHA)	thenderson@jacobandhefner.com	Cell: (714) 656-7100

When leaving messages and sending e-mails, state the following:
Date: The date the incident occurred.
Time: The approximate time the incident occurred.
Location: Where the incident occurred. Provide address.
Description: Describe briefly what happened and what it may affect.

2. After the incident is under control, the sequence of events will be recorded, including probable cause, people who responded to the incident, the extents of the incident, and relevant dates and times.

MAP AND DIRECTIONS TO HOSPITAL

From 12520 East Whittier Boulevard (Site) **A**
Head southeast on East Whittier Boulevard
Turn right at Washington Boulevard
Arrive at Presbyterian Intercommunity Hospital **B**
12401 Washington Boulevard, California 90602
(562) 698-0811

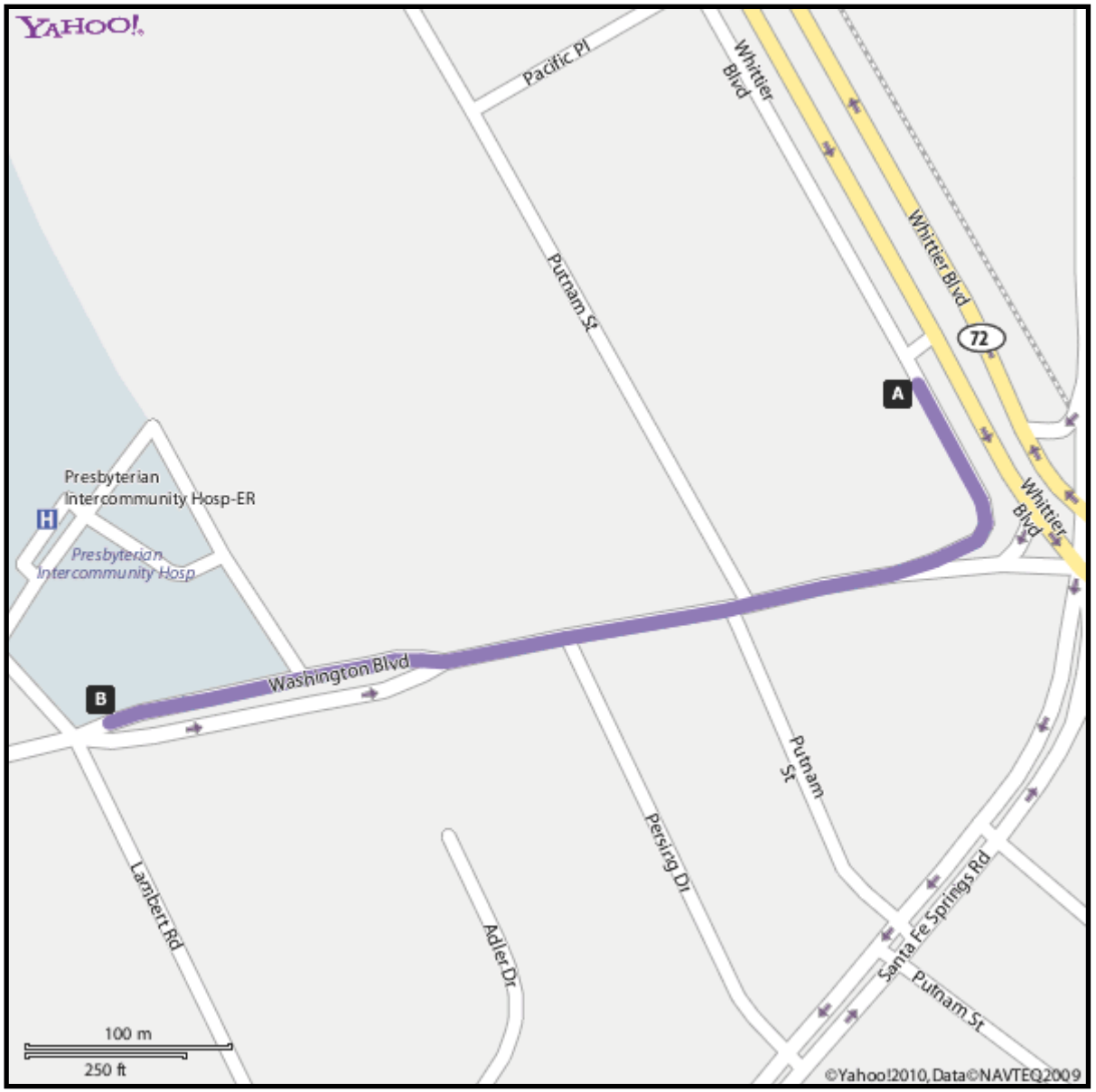

APPENDIX C
AGREEMENT & ACKNOWLEDGEMENT SHEET

JHA Environmental, Inc. (JHA) personnel have the authority to stop field activities at this Site if any activity is not performed in accordance with the requirements of the Site-Specific Health and Safety Plan (HASP). All JHA project personnel, JHA subcontractor personnel, and visitors are required to sign the Agreement and Acknowledgement Sheet prior to conducting field activities at this Site.

JHA Environmental, Inc. **AGREEMENT AND ACKNOWLEDGEMENT STATEMENT**	
1. I have read and fully understand the Site-Specific HASP and my responsibilities. 2. I agree to abide by the provisions of the Site-Specific HASP.	
Name	Signature
Company	Date
Name	Signature
Company	Date
Name	Signature
Company	Date
Name	Signature
Company	Date
Name	Signature
Company	Date
Name	Signature
Company	Date
Name	Signature
Company	Date
Name	Signature
Company	Date
Name	Signature
Company	Date
Name	Signature
Company	Date
Name	Signature
Company	Date

JHA Environmental, Inc. **AGREEMENT AND ACKNOWLEDGEMENT STATEMENT**	
1. I have read and fully understand the Site-Specific HASP and my responsibilities. 2. I agree to abide by the provisions of the Site-Specific HASP.	
Name	Signature
Company	Date
Name	Signature
Company	Date
Name	Signature
Company	Date
Name	Signature
Company	Date
Name	Signature
Company	Date
Name	Signature
Company	Date
Name	Signature
Company	Date
Name	Signature
Company	Date
Name	Signature
Company	Date
Name	Signature
Company	Date
Name	Signature
Company	Date
Name	Signature
Company	Date
Name	Signature
Company	Date
Name	Signature
Company	Date

Appendix B

Standard Operating Procedures

Table of Contents

SOP 104 ..... Vapor Sample Collection
SOP 107 ..... Shut-in and Leak Testing
SOP 108 ..... Alarm Testing
SOP 270 ..... Leak Inspection of GAC Piping
SOP 370 ..... Photoionization Device (PID) Calibration
SOP 400 ..... GAC Profiling
SOP 401 ..... GAC Changeout
SOP 501 ..... Lockout Tagout

Vapor Sample Collection SOP 104

Revision	Date	Purpose
0	10/21/08	Preliminary for Draft OM&M submittal
1	07/05/09	Revised for EPA/ITSI preliminary
2	08/07/09	Revised per EPA/ITSI comments
3	03/31/15	For full-scale system implementation
4	09/06/18	For OU-1 SVE System OM&M Manual

1.0 General

The purpose of the standard operating procedure (SOP) is to define requirements for collection of vapor samples using evacuated summa canisters for laboratory analysis and tedlar bags for field measurements.

2.0 Background

Collection of vapor samples for laboratory analysis is required to evaluate performance by analyzing the concentrations of extracted vapors. These methods are adapted from the technical resources presented in Section 5 of this SOP. Please see SOP 107 for required shut-in and leak testing procedures that must be performed prior to collection of vapor samples.

3.0 Required Equipment

- Sample collection tracking form
- Canisters and laboratory provided filters
- Sampling Labels
- Chain-of-custody forms
- Sampling Inlet Line/Connectors
- Shipping Container
- Stainless steel vacuum/pressure gauge
- Field Instrument using a PID
- Handheld vacuum pump
- Equipment calibration sheet
- Total Organic Compounds Concentrations log
- Tedlar bag(s)

4.0 Procedures

Assess weather and soil moisture conditions (Section 4.1, below).

1. Fill out the Chain of Custody (COC) form.

2. Pre-label the sampling containers

4.1 Weather and Soil Moisture Conditions

The weather conditions present during a soil gas sampling event may introduce bias to sample analytical results. Therefore, soil gas sampling should not occur during a significant rain event and should only occur a minimum of five days after a significant rain event. A significant rain event is defined as 1/2 inch or greater of rainfall during a 24-hour period.

Vapor Sample Collection SOP 104

Irrigation or watering of soil should stop at least five days prior to the soil gas sampling event. Likewise, areas subject to soil gas sampling should be free of standing or ponded water for at least five days prior to sampling. If the well or vapor monitoring probe is clearly impacted by water (i.e., excessive amounts of moisture, long purge time, Summa canister stops filling, etc.), regardless of the time since the last rain event or amount of rain, do not continue sampling or analyze the sample. Additionally, do not perform soil gas sampling in swales or depressions where water might have accumulated. However, soil gas sampling after rainfall can proceed where infiltration has not occurred, such as under buildings or beneath high-integrity pavement.

4.2 Summa Canister

4.2.1 Sample Preparation (to be performed in a clean environment)

1. Verify that label on each canister indicates that it was cleaned and preset under a laboratory vacuum of approximately 29 inches of mercury (Hg).

2. Remove the Swagelok cap from the end of the canister and attach a clean vacuum gauge assembly. Verify that the gauge reads zero.

3. Attach the gauge fitting and open the canister valve. Open the canister valve, read the gauge, and record the gauge reading on the chain-of-custody.

4. SHUT THE VALVE TIGHTLY.

5. NOTE: If the preset laboratory vacuum minus the field measured vacuum is more than 1 inch of Hg, then the canister valve has leaked and a portion of the canister has been filled with an unknown vapor sample (e.g. ambient air), replace the canister and document the change.

6. If the two vacuum readings agree and the canister is suitable for use, verify that the valve is closed tightly, and remove the vacuum gauge. Attach a clean sample filter (supplied by laboratory) and replace the Swagelok cap on the filter.

7. Repeat 'Sample Preparation' process for the quantity of samples to be collected. Fill out sample labels with the appropriate sample information.

4.2.2 Sample Collection from All Locations

1. Confirm that the sample identification number on the sample label (completed above) matches the sample port from which the sample will be collected.

2. Attach the canister to the sample port. The sample will be drawn into the canister by the vacuum.

3. Check the tightness of the fittings on the sampling apparatus and the connections on the canister.

Vapor Sample Collection SOP 104

4. To initiate a sample event, gently open (counter clockwise) the canister valve until a hissing noise is heard. Note the initial vacuum reading on the gauge (attached to the canister with a tee) and that the vacuum level begins to drop. Adjust the valve so that there is a slow hiss, allowing the canister to fill in about a half minute. The canister valve can be closed before the hissing stops and the vacuum gauge reaches 0 inches Hg. Record the final vacuum level on the chain-of-custody.

5. Close the valve firmly, without overtightening.

6. Remove the canister from the sampling apparatus, remove the gauge and filter, and replace the canister cap. Do not use the filter to collect another sample.

7. Complete the sample label, if necessary. Complete the necessary information on the chain-of-custody and sample tracking form.

8. Place the canister in the shipping container. Return the used filters to the laboratory in a separate plastic bag.

9. Document in the field log book and fill out the appropriate field forms.

4.2.3 Sample Collection from Vapor Monitoring Probes

1. Confirm that the sample identification number on the sample label (completed above) matches the sample port from which the sample will be collected.

2. Purge 3 well volumes prior to sampling.

    a. Calculate the purge volume by calculating the volume of the gravel pack and the volume of the tubing using the following formulae:

    b. Gravel Pack Volume: [3.1416 x (borehole radius in feet) 2 x length of the gravel pack in the well in feet) x 0.3]

    c. Sample Tubing Volume: [3.1416 x (borehole radius in feet) 2 x length of the tubing in the well in feet)

    d. Add the gravel pack volume and the sample tubing volumes together for one purge volume of the well.

        Where:

        3.1416 = pi (A)

        0.3 = estimated porosity of gravel pack

3. Attach the evacuated canister to the sample port.

Vapor Sample Collection SOP 104

4. Check the tightness of the fittings on the sampling apparatus and the connections on the canister.

5. To initiate a sample event, gently open (counter clockwise) the canister valve until a hissing noise is heard. Note the initial vacuum reading on the gauge (attached to the canister with a tee) and that the vacuum level begins to drop. Adjust the valve so that there is a slow hiss, allowing the canister to fill in about a half minute. The canister valve can be closed before the hissing stops and the vacuum gauge reaches zero inches Hg. Record the final vacuum level on the chain-of-custody.

6. Close the valve firmly, without over tightening.

7. Remove the canister from the sampling apparatus, remove the gauge and filter, and replace the canister cap. Do not use the filter to collect another sample.

8. Complete the sample label, if necessary. Complete the necessary information on the chain-of-custody and sample tracking form.

9. Place the canister in the shipping container. Return the used filters to the laboratory in a separate plastic bag.

10. Document the sampling procedures in the field log book and fill out the appropriate field forms.

4.3 Tedlar Bags

4.3.1 Field Instrument Calibration

Sample collection using a tedlar bag are only to be made when collecting measurements with a photoionization detector (PID), and not for any analytical sampling. Refer to SOP 370 for PID calibration procedures.

1. Connect the measurement probe to the instrument and make necessary operational checks (e.g., battery check, etc.) as outlined in the manufacturer's manual.

2. Calibrate the instrument following the applicable manufacturer's manual. Calibration shall be performed with each monitoring visit.

3. Document calibration on the "Field Instrument Calibration Form".

4. Make sure the instrument is reading zero and all function and range switches are set appropriately.

5. Follow the appropriate procedures listed below depending on the sample type (treatment system sample port, VEW or VMP).

Vapor Sample Collection SOP 104

4.3.2 Treatment System Sample Port or VEW and DPE well Sample Measurement

1. Air measurements should be taken from the correct sample port, working upstream. Locate and identify all the correct sample ports.
2. Assemble the vacuum pump and tedlar bag assembly. Make sure the tedlar bag is free of all air and the valve on the bag is closed.
3. Open the valve on the tedlar bag.
4. Open the sample port and use the vacuum pump to fill the tedlar bag.
5. Close the sample port, followed by the valve on the tedlar bag.
6. Connect the measurement probe from the PID to the tedlar bag.
7. Open the tedlar bag and observe the reading from the instrument display.
8. Document activity the field log book and TOC concentration on data collection form.

5.0 References

California Environmental Protection Agency; Department of Toxic Substances Control; Los Angeles Regional Water Quality Control Board; San Francisco Regional Water Quality Control Board. 2015. Advisory - Active Soil Gas Investigations. July.

United States Environmental Protection Agency (USEPA). 2015. Assessing and Mitigating the Vapor Intrusion Pathway from Subsurface Vapor Sources to Indoor Air. June.

USEPA Center for Environmental Research Information
Office of Research and Development. 1999. Compendium Method TO-15 - Determination of Volatile Organic Compounds (VOCs) in Air Collected in
Specially-Prepared Canisters and Analyzed by Gas Chromatography/
Mass Spectrometry (GC/MS). January.

Shut-in and leak testing SOP 107

Revision	Date	Purpose
0	12/17/2018	For OU-1 SVE System OM&M Manual

1.0 General

The purpose of the standard operating procedure (SOP) is to define requirements for shut-in tests and leak tests to be conducted prior to collection of vapor samples from vapor monitoring probes (VMPs), vapor extraction wells (VEWs), or dual phase extraction (DPE) wells.

2.0 Background

Shut-in tests are required to determine the presence of leaks in the above-ground sampling system, following complete assembly of all lines, valves and fittings downstream from the top of the probe. Leak tests assess quality of the seal and possible leakage between the annulus and the probe casing and should be performed on all VMPs. Shut-in tests should be conducted prior to sample collection from all VMPs, VEWs, and DPE wells. The methods described in this SOP are adapted from the technical resources referenced in Section 4.3 of this SOP.

3.0 Required Equipment

- Tracer gas (such as 1,1-Difluoroethane [1,1-DFA])
- Clean rag
- Summa Canisters
- Sampling manifold assembly
- Purge pump (such as a lung box)
- Shroud

4.0 Procedures

Procedures for performing shut-in tests and leak tests are described in this section.

4.1 Shut-in Test

1. Connect the vapor monitoring probe/well to the sampling manifold assembly and purge pump.

2. Close the vapor monitoring probe/well valve.

3. Confirm that the summa canister valve is closed.

4. Turn the long box pump on to induce a vacuum of at least 100 inches of water (7.3 inches of mercury) on the sampling manifold assembly, as indicated by the pressure gauge on the lung box.

5. Verify that there are no leaks in the sampling manifold by checking the pressure gauge on the lung box. If no leaks are present, then the pressure should be equal to

Shut-in and leak testing **SOP 107**

the initial vacuum induced by the purge pump after a couple of minutes have elapsed.

6. If the vacuum dissipates quickly, this indicates the presence of a leak. Disconnect all connections and carefully reconnect one at a time until the source of the leak is identified through repeat testing of each connection in turn.

7. After a successful shut-in test (manifold holds vacuum), do not alter sampling train, and continue with required sampling.

4.2 Leak Test

1. Spray inside of well box with tracer gas (such as 1,1-DFA), then place shroud over the well box.

2. Spray a clean rag with tracer gas and place rag over the manifold assembly.

3. Conduct sampling procedures as described in SOP 104.

4. If 1,1-DFA is detected in the sample, then there is a leak in the well seal or sampling manifold. Actions will be taken to identify source of leak and remedy the leak.

4.3 References

California Environmental Protection Agency; Department of Toxic Substances Control; Los Angeles Regional Water Quality Control Board; San Francisco Regional Water Quality Control Board. 2015. Advisory - Active Soil Gas Investigations. July.

United States Environmental Protection Agency. 2015. Assessing and Mitigating the Vapor Intrusion Pathway from Subsurface Vapor Sources to Indoor Air. June.

Alarm testing SOP 108

Revision	Date	Purpose
0	09/06/18	For OU-1 SVE System OM&M Manual

1.0 General

The purpose of the standard operating procedure (SOP) is to define the methods used to test each of the OU-1 SVE system's alarms for proper functionality.

2.0 Background

When an alarm condition is present, the system's autodialer will send out a notification to operators in the form of a phone call. The alarms should be tested annually, at a minimum, following the procedures herein.

3.0 Procedures

3.1 High-High Condensate Level in Moisture Separator

Follow these steps to test the alarm for the high-high moisture separator condensate level condition:

1. Confirm that the GWCS is operating normally (no active alarms) and is ready to receive condensate from the OU-1 SVE system.
2. Observe sight glass to confirm condensate level in tank.
3. Unscrew the threaded plug located on the outside of the moisture separator tank.
4. Insert garden hose (stored at the GWCS compound) into the opening where the plug was.
5. Turn on the hose to fill the condensate tank with potable water.
6. Observe the sight glass. The pump should begin operating when the water level has reached the high-level float switch.
7. When the water level reaches the high-high float, the system should shut down and a notification should be received from the auto-dialer.
8. If the alarm does not work, or the system does not respond appropriately, troubleshoot as necessary.
9. If the alarm functioned properly, set the pump to "auto" to pump the majority of the condensate to the GWCS, drain the condensate tank completely, replace the threaded plug on the side of the tank, and return the pump to "off."

3.2 High Heat Exchanger Discharge Temperature

Follow these steps to test the alarm for the high heat exchanger discharge temperature condition:

Alarm testing SOP 108

1. Confirm that the OU-1 SVE system is operating normally (no active alarms) and that the heat exchanger is on.
2. Observe the temperature of the vapor discharging from the heat exchanger by looking at the temperature controller display. The heat exchanger discharge temperature should range from 100 to 140 during heat exchanger operation.
3. On the temperature controller, change the high temperature set-point from 140 deg F. to a value that is 5 degrees less than the temperature noted in step 2. For example, if the temperature controller display indicated that the heat exchanger discharge temperature was 120 deg F, then change the high temperature set-point to 115 deg F.
4. The system should shut off and an alarm notification should be received from the autodialer.
5. If the alarm does not work, or the system does not respond appropriately, troubleshoot as necessary.
6. If the alarm functions properly, return the high temperature set-point to 140 deg F on the temperature controller.

3.3 High Blower Flowrate

Follow these steps to test the alarm for the high blower flowrate condition:

1. Confirm that the OU-1 SVE system is operating normally (no active alarms) and that the blower is running.
2. Observe the flowrate of the vapor through the blower by looking at the influent flowmeter display. The flowrate should range from 250 to 1,280 SCFM during blower operation.
3. Use the flowmeter display to change the high flowrate set-point from 1,280 to a value that is 100 SCFM less than the flowmeter display indicated in step 2. For example, if the flowmeter display indicated that the blower flowrate was 1,000 SCFM, then change the high flowrate set-point to 900 SCFM.
4. The system should shut off and an alarm notification should be received from the autodialer.
5. If the alarm does not work, or the system does not respond appropriately, troubleshoot as necessary.
6. If the alarm functions properly, return the high flowrate set-point to 1,280 SCFM on the flowmeter display.

3.4 Blower Shutdown

Follow these steps to test the alarm for the blower shutdown condition:

1. Confirm that the OU-1 SVE system is operating normally (no active alarms) and that the blower is running.
2. Press the Emergency Stop button (located in the control panel).
3. The system should shut off and an alarm notification should be received from the autodialer.
4. If the alarm does not work, or the system does not respond appropriately, troubleshoot as necessary.

Leak Inspection of the Vapor Phase GAC and Piping System SOP 270

Revision	Date	Purpose
0	10/21/08	Preliminary for Draft OM&M submittal
1	07/05/09	Revised for EPA/ITSI preliminary
2	08/07/09	Revised per EPA/ITSI comments
3	03/31/15	For ISVE OM&M submittal to include VEWs piping
4	03/31/15	For full-scale system implementation
5	09/07/18	For OU-1 SVE System OM&M Manual

1.0 General

This standard operating procedure (SOP) provides a procedure for inspecting fugitive emission for vapor phase GAC vessels and the treatment system piping.

2.0 Background

The GAC vessels and all treatment system piping downstream of the blower are under pressure in the current configuration of the system. Leaks in the treatment system and vessel piping could result in fugitive emissions to the atmosphere.

3.0 Required Equipment

- Soapy solution to test for leaks
- Spray bottle
- Field logbook

4.0 Procedures

1. Obtain the appropriate field form and paperwork.

2. The VGAC piping system should be under pressure. Throttle back the exhaust butterfly valve to build more pressure in the vessels and piping system, as feasible given process conditions and current flowrates.

3. Spray the soapy water solution on all VGAC vessel fittings, joints, valves connections and observe for air bubbles.

4. If a leak is detected, identify the location and type of leak and document on the daily field report.

5. Consult the Project Coordinator and prepare the system for shutdown.

6. Repair the leak prior to re-starting the system.

Photoionization detector SOP 370

Revision	Date	Purpose
0	08/05/09	Added during startup
1	06/10/10	Added to ISVE OM&M submittal with VEW and VMP monitoring
2	03/31/15	For full-scale system implementation
3	09/06/18	OU-1 SVE System OM&M Manual

1.0 General

This SOP is for calibration of the photoionization detector (PID) model MiniRAE 3000, produced by RAE Systems. This PID is currently the only PID used within OU-1. If other PIDs are used please refer to manufacturer-provided documentation. See **Appendix E** for manufacturer specific information, including calibration. Calibration of the PID is required each day the PID is used.

2.0 Background

A PID will be used for field monitoring the treatment system to verify that the system is operating as designed, and to monitor total VOC concentrations at VMPs, VEWs and DPE wells to monitor operations.

3.0 Required Equipment

- PID
- PID sampling tip with tubing
- Calibration gas cylinder
- Calibration gas regulator
- Tedlar bags

4.0 Procedures

1. Refer to the "Standard Two-Point Calibration (Zero & Span, Optional Bump)" section in the manufacturer's manual provided in **Appendix E** for detailed instructions on calibration and complete those instructions. Record the results of the calibration on the appropriate field form (see **Appendix F**).

Granular Activated Carbon Profiling SOP 400

Revision	Date	Purpose
0	10/21/08	Preliminary for Draft OM&M submittal
1	07/05/09	Revised for EPA/ITSI preliminary
2	08/07/09	Revised per EPA/ITSI comments
3	06/10/10	Revised for ISVE OM&M submittal
4	03/31/15	For full-scale system implementation
5	09/06/18	For OU-1 SVE System OM&M Manual

1.0 General

This standard operating procedure (SOP) provides instructions for collecting a sample for GAC profiling. GAC media will be replaced by a third party vendor.

2.0 Background

Profiling is required to determine the characteristics of the spent media prior to offsite disposal or reactivation.

3.0 Required Equipment

- 250 ml sample container
- Site-specific carbon profiling procedures
- Blank profile form
- Field logbook

4.0 Procedures

The following procedures are developed as a general practice but will differ with each vendor. Carbon profiling shall be performed by certified third party vendor. Prior to performing the procedures, obtain and review the site-specific procedures from the selected vendor.

1. Prepare the system for shutdown. System must be offline for this work.

2. Take the vessels offline by closing the inlet valve and the discharge valve. Perform lockout and tagout. Open the drain valve located at the bottom of the vessel. Drain any condensate into a small bucket or container.

3. Remove the top manway cover to allow the GAC supplier to collect a sample of the GAC media.

4. Collect a 250 ml sample of spent GAC media. This sample will be labeled and stored onsite. The sample ID should include the Batch number and date of changeout.

5. Re-install the top manway cover.

6. System remain offline until profiling and carbon changeout are complete

7. Document sample collection in field logbook and on sample tracking form.

Vapor Phase Granular Activated Carbon Changeout — SOP 401

Revision	Date	Purpose
0	10/21/08	Preliminary for Draft OM&M submittal
1	07/05/09	Revised for EPA/ITSI preliminary
2	08/07/09	Revised per EPA/ITSI comments
3	06/22/10	Revised for ISVE OM&M submittal
4	03/31/15	For full-scale system implementation
5	09/06/18	For OU-1 SVE System OM&M Manual

1.0 General

This standard operating procedure (SOP) provides instruction for the replacement of spent GAC media. GAC media will be replaced by a third party vendor.

2.0 Background

When the removal efficiency is required per the Health Risk Assessment (**Appendix D** of the OM&M Manual), changeout will need to be performed.

3.0 Required Equipment

- Field logbook
- Site-specific carbon changeout procedures
- Completed profile form
- Spec sheet for the carbon media

4.0 Procedures

The following procedures are developed as a general practice but will differ with each vendor. Carbon changeout shall be performed by certified third party vendor. Prior to performing the procedures, obtain and review the site-specific procedures from the selected vendor and the completed profile form.

1. Prepare the system for shutdown. System must be offline for this work.

2. Take the vessels offline by closing the inlet valve and the discharge valve. Perform lockout and tagout. Open the drain valve located at the bottom of the vessel. Drain any condensate into a small bucket or container.

3. Remove the top manway cover to allow the GAC supplier to remove the GAC with a vacuum hose. The GAC supplier will use a forklift or other lifting equipment to raise the sacks above the GAC top manway and empty the contents into the vessel.

4. Fill out a Confined Space Entry form. The GAC provider will enter the vessel to level the top of the GAC to ensure even distribution of the GAC over the media support. Once the vessel has been emptied the drain valve should be closed.

5. After removal of the spent carbon is complete, the vessel should be checked thoroughly. Using a flashlight, inspect the vessel lining for damage or any other visible defects. Inspection of the lower portion of the vessel for cracks, chips, or

Vapor Phase Granular Activated Carbon Changeout	**SOP 401**

other defects. The operator must comply with confined space entry requirements when inspecting the inside of the GAC vessel.

6. Fill the vessel with the approved carbon media. The manway may be replaced once the vessel is filled and leveled.

7. Finally, remove the lockout devices and open the inlet and outlet.

8. Document the changeout in Field Logbook.

Lockout Tagout Inspection SOP 501

Revision	Date	Purpose
0	10/21/08	Preliminary for Draft OM&M submittal
1	07/05/09	Revised for EPA/ITSI preliminary
2	08/07/09	Revised per EPA/ITSI comments
3	03/31/15	For full-scale system implementation
4	09/06/18	For OU-1 SVE System OM&M Manual

1.0 General

This standard operating procedure (SOP) provides an inspection checklist and guidelines to facilitate the Lockout Tagout activity.

2.0 Background

In the event that a piece of process equipment requires servicing, Lockout Tagout procedures must be followed to avoid injury and damage to equipment.

3.0 Required Equipment

- Lockout Tagout Inspection Form
- Lockout Tagout Kit

4.0 Procedures

1. Fill out the form in its entirety.

2. Perform the work.

3. File the paperwork.

Lockout / Tagout Inspection Form

Project Name:_____**Project Number:**_____

1. Inspection Conducted by:_____on_____
2. Machines/Equipment Inspected:_____
   _____
3. Names of Employees Checked:_____
   _____
4. Deficiencies Notes:_____
   _____
5. Corrective Action Taken:_____
   _____

		YES	***NO***
6.	Have employees (contractors) been trained/instructed in our lockout procedure?	_____	_____
7.	Are lock and/or tag devices authorized by the company procedure?	_____	_____
8.	Are all affected employees (contractors) notified that a lockout is required and the reason for it?	_____	_____
9.	Is equipment being shut down by required shutdown procedure?	_____	_____
10.	Are the switches, valves, or other energy isolating devices disconnected or isolated from the equipment?	_____	_____
11.	Are the energy isolating devices located out/tagged out by an authorized employee's individual lock/tag?	_____	_____
12.	Are the push buttons or other normal operating controls checked to see if the energy sources are disconnected and that the equipment cannot operate?	_____	_____
13.	Are equipment areas checked to see that personnel are not in the area and all locks/tags are removed?	_____	_____
14.	If more than on individual is required to lockout equipment, does each person place his/her own personal lock/tag on the energy isolating device(s)? Are all steps of group lockout/tagout procedures observed?	_____	_____
15.	If an employee or contractor is not available to clear his/her lock/tag, does the supervisor remove the lock/tag after taking all the precautions listed in our lockout/tagout program?	_____	_____

Remarks:_____
_____
_____

Appendix C

Record Drawings

OPERABLE UNIT NO. 1 (OU-1)
SOIL VAPOR EXTRACTION (SVE) AND DUAL PHASE EXTRACTION (VAPOR ONLY)
12504 / 12512 EAST WHITTIER BOULEVARD
WHITTIER, CALIFORNIA

RECORD DRAWINGS
JULY 2018

SITE

©2000 DELORME, XMAP BUSINESS: ©2000 GDT INC. REL 04/2000

VICINITY MAP

0 1 2 3 4 5
MILES

PROJECT AREA

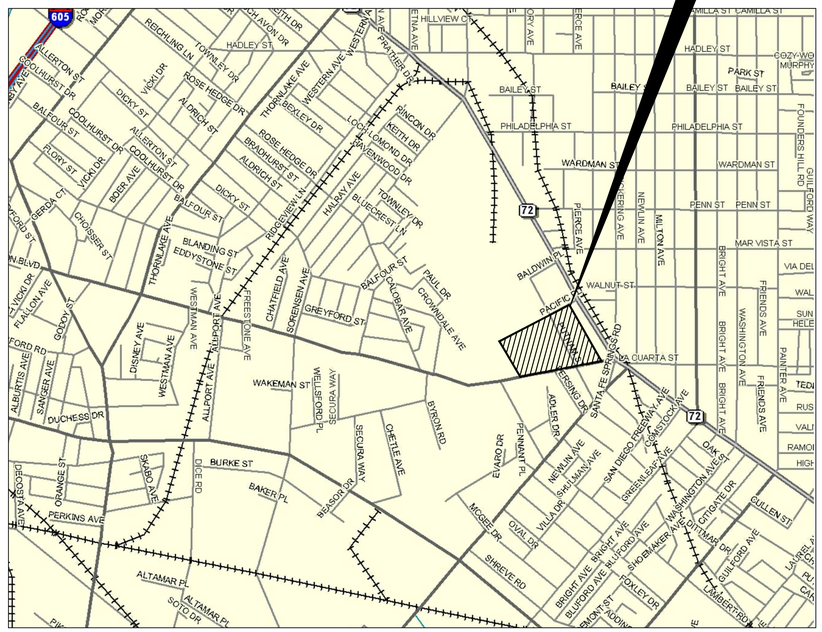

©2000 DELORME, XMAP BUSINESS: ©2000 GDT INC. REL 04/2000

LOCATION PLAN

700 350 0 700
FEET

N

DRAWING LIST

GENERAL

G-1 TITLE SHEET AND DRAWING LIST

CIVIL

C-1 CIVIL LEGEND AND NOTES
C-2 GENERAL CIVIL NOTES
C-3 OU-1 SVE SYSTEM SITE PLAN
C-4 SOIL VAPOR EXTRACTION WELL DETAIL AND SCHEDULE
C-5 DUAL-PHASE EXTRACTION WELLHEAD CONSTRUCTION DETAIL AND SCHEDULE
C-6 TRENCH SECTION AND DETAILS

STRUCTURAL

S-1 STRUCTURAL GENERAL NOTES
S-2 STRUCTURAL STANDARD DETAILS

MECHANICAL

M-1 OU-1 SVE SYSTEM MECHANICAL PLAN

ELECTRICAL

E-1 ELECTRICAL LEGEND AND NOTES I
E-2 ELECTRICAL LEGEND AND NOTES II
E-3 ELECTRICAL UTILITY AND POWER SITE PLAN
E-5 RISER DIAGRAM, LOAD COMPUTATION, AND CONDUIT AND WIRE LEGEND
E-7 ELECTRIAL DETAILS

INSTRUMENTATION

I-1 PIPING AND INSTRUMENTATION DIAGRAM LEGEND I
I-2 PIPING AND INSTRUMENTATION DIAGRAM LEGEND II
I-4 OU-1 SVE SYSTEM PIPING AND INSTRUMENTATION DIAGRAM
I-4A PIPING AND INSTRUMENTATION DIAGRAM - GROUNDWATER AND DUAL PHASE EXTRACTION WELLS

REV. NO.	DATE	DRWN	CHKD	REMARKS
8	7/2018	SKM	JTB	RECORD DRAWING (MODIFIED FOR RACR)
7	3/2018	MP	JTB	RECORD DRAWING (MODIFIED TO DELINIATE OU1)
6	8/2015	PJR	MTG	RECORD DRAWING (MODIFIED FOR FULL-SCALE SYSTEM)
5	4/2014	PJR	JTB	REVISED IFC DRAWING
4	1/2014	PJR	JTB	ISSUED FOR CONSTRUCTION
3	7/12/13	PJR	IL	REVISED FOR PDR SUBMITTAL
2	5/17/13	PJR	DDN	REVISED FOR PDR SUBMITTAL

RECORD DRAWING

THIS RECORD DRAWING HAS BEEN PREPARED BASED ON A COMBINATION OF INFORMATION PROVIDED BY OTHERS AND BY CDM Smith. THE ENGINEER HAS NOT VERIFIED THE ACCURACY OF ALL THE INFORMATION. TO THE BEST OF THE ENGINEER'S BELIEF AND KNOWLEDGE, THE INCLUDED RECORD INFORMATION IS REASONABLY ACCURATE.

By RAVI SUBRAMANIAN Date JULY 2018

CDM Smith

CDM Smith
111 Academy Way, Suite 150
Irvine, California, 92617
Tel: (949) 752-5452

XREFs: [CA-Ravi-S-2015, RECORD DRAWING-ALT-C (JULY 2018)] Images: [omega-3, Subramanian, whittier]
Last saved by: MALPASSSK Time: 6/26/2018 8:52:28 AM
pw:\\pw.cdmsmith.com:PW_XM1\105009776\04 Design Services NM_30%\01 General\10 CADD\01 Working\2015 RECORD DWGS (GWTS & SVE)\SVE SYSTEM (RECORD DRAWINGS)\OU1SVE-G-1.dwg

SYMBOL NOTES

1. BOLD ITEMS: OU-1 SVE SYSTEM INFRASTRUCTURE
2. SHADED ITEMS: ADJACENT SYSTEMS (AOC SVE AND GWCS)

2.1 MUNICIPAL UTILITIES: EXISTING

SYMBOLS

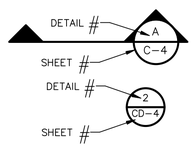

SECTION CALLOUT

DETAIL CALLOUT

PIPING LEGEND

MATERIAL CODES

PVC	SCHEDULE 40 PVC
HDPE	HIGH DENSITY POLYETHYLENE (SDR-11 FOR INTERIOR WALL IN DOUBLE WALL PIPING AND FOR SINGLE WALL PIPE, AND SDR-17 FOR EXTERIOR PIPE IN DOUBLE WALL PIPING.)

FLUID/ABBREVIATIONS

EGW	EXTRACTED GROUNDWATER
PV	PROCESS VAPOR
SV	SOIL VAPOR

PIPE LINE SYMBOLS

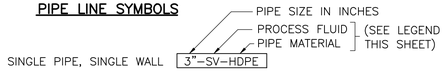

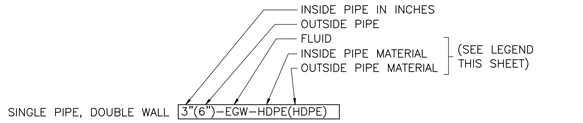

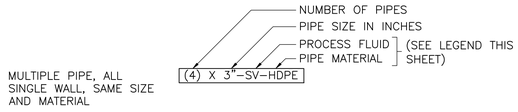

SVE WELL AND PIPING SYMBOLS

- OU-1 SOIL VAPOR EXTRACTION (SVE) LINE
- AOC SVE LINE
- VMP-XX ◑ SOIL VAPOR MONITORING PROBE LOCATION AND DESIGNATION
- VE-XX ⊙ OU-1 SOIL VAPOR EXTRACTION WELL LOCATION AND DESIGNATION
- VE-XX ◓ OU-1 SOIL VAPOR EXTRACTION WELL (CONNECTED TO AOC TREATMENT SYSTEM) LOCATION AND DESIGNATION
- VE-XX ● AOC SOIL VAPOR EXTRACTION WELL LOCATION AND DESIGNATION
- DPE-X ⊠ OU-1 DUAL PHASE EXTRACTION WELL LOCATION AND DESIGNATION
- VE-XD ⊠ OU-1 DUAL PHASE EXTRACTION WELL (CONNECTED TO AOC SVE TREATMENT SYSTEM)
- VE-XXD ⊟ AOC DUAL PHASE EXTRACTION WELL
- OU-1 BOUNDARY

UTILITY SYMBOLS

SYMBOL	FEATURE
MH-14 WEST INV 27.35 EAST INV 32.50 — 8-SS-PVC	SANITARY SEWER AND MANHOLE
MH-22 EAST INV 32.75 WEST INV 32.50 — 8-SD-XX — CB-1 INV 33.75	STORM DRAIN, MANHOLE, AND CATCH BASIN
12-FPW-PVC — FH	FIRE LINE W/ FIRE HYDRANT ASSEMBLY (INCLUDES VALVE)
4-FPW-PVC — FDC	FIRE DEPARTMENT CONNECTION
12-SD-PVC — C.O.	CLEANOUT
12-FPW-PVC — B.O.	BLOWOFF
6-SS-PVC	FORCE MAIN
6-W-PVC	OTHER PIPELINE CALLOUT
	PIPE MATERIAL (OPTIONAL)
	ABBREVIATED PROCESS LINE DESCRIPTION
	PIPE DIAMETER (IN INCHES)
	PROPERTY LINE

TOPOGRAPHY LEGEND:

UNK	CIRCLE VARIABLE ANNO.		HANDICAP AREA
	VALVE		METER
FP	FLAG POLE	MB	MAILBOX
	SIGN		MANHOLE
	LARGE SIGN		TREE
	FIRE HYDRANT		PALM TREE
	POWER POLE		DRAIN INLET
	POWER/LIGHT POLE		ANTENNA
	LIGHT POLE		GUYWIRE
	POST	0.0	SPOT ELEVATION
	ELECTROLIER		CANOPY
	TRAFFIC SIGNAL		UNKNOWN PEDESTAL
	TRAFFIC/LIGHT POLE		BACKFLOW PREVENTION VALVE
	TRAFFIC SIGNAL ARM		GAS VALVE
POLE	POLE	IRCV	IRRIGATION CONTROL VALVE
SP	STAND PIPE		WATER SPIGOT
WH	WELLHEAD		VAPOR WELL
	CENTERLINE		WATER METER
	SURVEY MONUMENT		

UTILITY SYMBOLS;

- STORM/DRAINAGE
- ELECTRIC
- WATER
- SEWER
- GAS/PETROLEUM
- TELECOM/CABLE
- RECLAIMED WATER

SURVEY BASEMAP SYMBOLS;

- RETAINING WALL
- FENCE LINE
- POWER POLE
- STREET LIGHT OR SIGNAL
- LANE STRIPPING
- FIRE HYDRANT

UTILITY DETECTION NOTES

NOTE: ALL ELECTRONIC UTILITY DETECTING IS ACCOMPLISHED BY INDIRECT SIGNAL-MEASUREMENT METHODS. NO WARRANTY IS IMPLIED OR EXPRESSED, DUE TO THE NATURE OF THE METHODOLOGY. POT-HOLING IS RECOMMENDED FOR ALL POSSIBLE UTILITY CONFLICTS AND STANDARD UNDERGROUND SERVICE ALERT IS REQUIRED.

CERTAIN UTILITIES, INCLUDING, BUT NOT LIMITED TO FIBER OPTICS, CANNOT BE DETECTED VIA THIS DETECTION.

UTILITIES THAT ARE NON-CONDUCTIVE, OR HAVE NO SURFACE FEATURES, OR BREAKS IN CONTINUITY ARE NOT INCLUDED IN THIS SURVEY.

DEPTHS SHOWN TO SD PIPES ARE TO "INVERT", DEPTHS TO CONDUCTIVE UTILITIES ARE TYPICALLY TO THE CENTER OF THE SIGNAL/UTILITY, UNO.

1) UTILITY LOCATIONS CONFORM TO ASCE STANDARD 38-02 FOR SUBSURFACE UTILITY ENGINEERING (SUE).
2) UTILITY QUALITY LEVELS DESCRIBED AS FOLLOWS:
   QUALITY LEVEL "D" INFORMATION COMES SOLELY FROM EXISTING UTILITY RECORDS.
   QUALITY LEVEL "C" INVOLVES SURVEYING VISIBLE ABOVE-GROUND UTILITY FACILITIES, SUCH AS MANHOLES, VALVE BOXES, POSTS, ETC., AND CORRELATING THIS INFORMATION WITH EXISTING UTILITY RECORDS AND INCORPORATING METHODS OF LEVEL "D".
   QUALITY LEVEL "B" INVOLVES THE USE OF SURFACE RADIO-DETECTIONAL TECHNIQUES TO DETERMINE THE EXISTENCE AND HORIZONTAL POSITION OF UNDERGROUND UTILITIES, AND INCORPORATING METHODS OF "D" AND "C".
   QUALITY LEVEL "A" INVOLVES THE USE OF NON-DESTRUCTIVE DIGGING EQUIPMENT AT CRITICAL POINTS TO DETERMINE THE PRECISE HORIZONTAL AND VERTICAL POSITION OF UNDERGROUND UTILITIES, AS WELL AS THE TYPE, SIZE, CONDITION, MATERIAL, AND OTHER CHARACTERISTICS.
3) THE UNDERGROUND UTILITY LOCATIONS SHOWN HEREON REPRESENT A PROFESSIONAL OPINION AND INTERPRETATION BASED ON RECORD INDICATIONS AND FIELD EVIDENCE INCLUDING THE USE OF ELECTRONIC UTILITY DETECTION EQUIPMENT. THE RESULTS OF THIS UTILITY INVESTIGATION MAY BE AFFECTED BY THE AVAILABILITY OF UTILITY RECORD INFORMATION AND A VARIETY OF EXISTING SITE CONDITIONS. SITE CONDITIONS THAT MAY AFFECT THE RELIABILITY OF DETECTED UTILITY LOCATIONS INCLUDE SOIL CONTENT, DEPTH OF UTILITY, DENSITY OF UTILITY CLUSTERS, AND ELECTRO-MAGNETIC CHARACTERISTICS OF THE TARGET UTILITIES.

ABBREVIATIONS

AC	ASPHALT CONCRETE
BGS	BELOW GROUND SURFACE
CMP	CORRUGATED METAL PIPE
d	DEPTH TO SIGNAL
DPE	DUAL PHASE EXTRACTION
E	ELECTRICAL LINE
(EOS)	END OF SIGNAL DETECTION
FRR	FRED R RIPPY
FSSVE	FULL SCALE SVE
G	GAS/PETROLEUM PIPELINE
GWCS	GROUNDWATER CONTAINMENT SYSTEM
INV	INVERT OF PIPE
OU-1	OPERABLE UNIT 1
PCC	PORTLAND CONCRETE CEMENT
RCP	REINFORCED CONCRETE PIPE
RW	RECLAIMED WATER PIPELINE
SD	STORM DRAIN PIPELINE
SS	SANITARY SEWER PIPELINE
SPPWC	STANDARD PLANS FOR PUBLIC WORKS CONSTRUCTION, 2009 EDITION
SSPWC	STANDARD SPECIFICATIONS FOR PUBLIC WORKS CONSTRUCTION, 2009 EDITION
SVE	SOIL VAPOR EXTRACTION
TC	TELECOMMUNICATIONS/CABLE
UNO	UNLESS NOTED OTHERWISE
VEW	VAPOR EXTRACTION WELL
VMP	VAPOR MONITORING PROBE
W	WATER PIPELINE
WCCC	WOMEN AND CHILDREN CRISIS CENTER

CALL BEFORE YOU DIG:
UNDERGROUND SERVICE ALERT OF SOUTHERN CALIFORNIA
TWO WORKING DAYS BEFORE YOU DIG
1-800-227-2600

RECORD DRAWING

THIS RECORD DRAWING HAS BEPREPARED BASED ON A COMBINATION OF INFORMATION PROVIDED BY OTHERS AND BY CDM Smith. THE ENGINEER HAS NOT VERIFIED THE ACCURACY OF ALL THE INFORMATION. TO THE BEST OF THE ENGINEER'S BELIEF AND KNOWLEDGE, THE INCLUDED RECORD INFORMATION IS REASONABLY ACCURATE.

By RAVI SUBRAMANIAN Date JANUARY 2018

CDM Smith

REGISTERED PROFESSIONAL ENGINEER — RAVI SUBRAMANIAN — No. C053679 Exp. 06-30-2019 — CIVIL — STATE OF CALIFORNIA

REV. NO.	DATE	DRWN	CHKD	REMARKS
6	1/2018	MP	AFR	RECORD DRAWING (MODIFIED TO DELINIATE OU1)
5	7/2015	PJR	MTG	RECORD DRAWING
4	1/2014	PJR	JTB	ISSUED FOR CONSTRUCTION
3	7/12/13	PJR	IL	REVISED FOR PDR SUBMITTAL
2	5/17/13	PJR	DDN	REVISED FOR PDR SUBMITTAL
1	10/24/12	PJR	JTB	PDR SUBMITTAL

DESIGNED BY: AFR
DRAWN BY: MP
SHEET CHK'D BY: AFR
CROSS CHK'D BY: JTB
APPROVED BY: RS
DATE: JANUARY 2018

CDM Smith
111 Academy Way, Suite 150
Irvine, California, 92617
Tel: (949) 752-5452

OMEGA CHEMICAL SUPERFUND SITE
OU-1 SOIL VAPOR EXTRACTION SYSTEM
12504 / 12512 EAST WHITTIER BOULEVARD
WHITTIER, CALIFORNIA

CIVIL LEGEND AND NOTES

PROJECT NO. 10500-216711
FILE NAME: OU1SVE-C-1.DWG
SHEET NO. C-1

XREFs: [CA-Ravi-S-2015, SVE-CDMS_2234 - (RECORD DRAWING), SVE-GWTS BASE MAP, SURVEY, Wells_Merge_toCAD_0692015, AdditionalWellLocationsCAD2, CA-PE-Ravi-S-2012, CA-PE-Ravi-S-2019, RECORD DRAWING\OU1SVE-C-1.dwg
Last saved by: MALPASSIK Time: 8/26/2018 6:54:50 AM
pw:\\pw.cdmsmith.com:PW_XM11\05009776\04 Design Services NM_30%\01 General\10 CADD\01 Working\2015 RECORD DWGS (GWTS & SVE)\SVE SYSTEM (RECORD DRAWINGS)\OU1SVE-C-1.dwg
© 2015 CDM SMITH. ALL RIGHTS RESERVED.
REUSE OF DOCUMENTS: THESE DOCUMENTS AND DESIGNS PROVIDED BY PROFESSIONAL SERVICE, INCORPORATED HEREIN, ARE THE PROPERTY OF CDM SMITH AND ARE NOT TO BE USED, IN WHOLE OR PART, FOR ANY OTHER PROJECT WITHOUT THE WRITTEN AUTHORIZATION OF CDM SMITH.

GENERAL NOTES:

1. ALL WORK SHALL BE PERFORMED IN ACCORDANCE WITH ALL APPLICABLE FEDERAL, STATE, AND LOCAL CODES AND REQUIREMENTS.

2. CONTRACTOR SHALL BE RESPONSIBLE FOR VERIFYING ALL DIMENSIONS AND LOCATIONS SHOWN PRIOR TO COMMENCING WORK. ANY CONFLICTS WITH DETAILS AND NOTES SHALL BE BROUGHT TO THE IMMEDIATE ATTENTION OF THE ENGINEER IN WRITING.

3. WHERE CONFLICTS EXIST, THE CONTRACTOR SHALL NOTIFY THE ENGINEER IN WRITING IMMEDIATELY. NO CHANGES OR ADDITIONS TO THE SCOPE OF WORK DEPICTED HEREIN SHALL BE MADE WITHOUT PRIOR APPROVAL OF THE ENGINEER.

4. CONTRACTOR SHALL SECURE ALL APPLICABLE EXCAVATION, ENCROACHMENT, GRADING, ELECTRICAL, AND CONSTRUCTION PERMITS FROM APPROPRIATE AGENCIES PRIOR TO COMMENCING WORK. CONTRACTOR SHALL MAINTAIN COPIES OF ANY PERMITS AT THE JOB SITE FOR AGENCY INSPECTION.

5. CONTRACTOR SHALL LOCATE ALL UTILITIES AND PROTECT THEM FROM DAMAGE. THE CONTRACTOR SHALL REPAIR AND/OR REPLACE ANY UTILITIES DAMAGED BY THE CONTRACTOR AND PROVIDE FOR SERVICE CONTINUATION DURING REPAIRS AT HIS EXPENSE.

6. UTILITY CROSSINGS AND DEPTHS WITHIN THE PARCEL BOUNDARIES ARE APPROXIMATE. THE CONTRACTOR IS RESPONSIBLE FOR VERIFYING THE UTILITY LOCATIONS AND DEPTHS PRIOR TO CONSTRUCTION. EXISTING UTILITIES SHALL BE PROTECTED.

7. LOCATIONS OF UTILITIES OUTSIDE THE PARCEL BOUNDARY ARE APPROXIMATE. THE CONTRACTOR IS RESPONSIBLE TO VERIFY UTILITY LOCATIONS AND DEPTHS PRIOR TO CONSTRUCTION. EXISTING UTILITIES SHALL BE PROTECTED.

8. THE CONTRACTOR SHALL MAINTAIN AN ORDERLY AND CLEAN JOB SITE. THE CONTRACTOR SHALL REMOVE AND PROPERLY DISPOSE OF ALL CONSTRUCTION RELATED TRASH, DEBRIS, AND EXCESS MATERIALS. THE CONTRACTOR'S LAYDOWN AREA FOR MATERIALS SHALL BE COORDINATED WITH THE ENGINEER AND OTHER ON-SITE CONTRACTORS. SECURITY FOR CONTRACTOR'S EQUIPMENT AND MATERIALS IS THE RESPONSIBILITY OF THE CONTRACTOR.

9. STORMWATER POLLUTION PREVENTION: CONTRACTOR SHALL PREPARE, MAINTAIN COMPLIANCE WITH, AND IMPLEMENT A CONSTRUCTION STORMWATER POLLUTION PREVENTION PLAN (SWPPP) FOR THIS WORK IN ACCORDANCE WITH APPLICABLE LOCAL, STATE AND FEDERAL REGULATION. THIS SWPPP ALONG WITH OTHER DOCUMENTS SHALL BE WRITTEN, AMENDED, AND CERTIFIED BY A QUALIFIED SWPPP DEVELOPER (QSD) TO COMPLY WITH REQUIREMENTS OF AND OBTAIN COVERAGE UNDER THE 2009 CONSTRUCTION GENERAL PERMIT (ORDER No. 2009-0009-DWQ, AS AMENDED BY 2010-0014-DWQ AND 2012-006-DWQ; NPDES No. CASOOOOO2) ADOPTED BY THE STATE WATER RESOURCES CONTROL BOARD (SWRCB), OR THE LATEST VERSION OF THE PERMIT AT THE TIME OF CONSTRUCTION. CONTRACTOR SHALL FILE A NOTICE OF INTENT (NOI), SWPPP, APPROPRIATE PERMIT DOCUMENTS AND FEES WELL IN ADVANCE OF BEGINNING THE WORK AND FILE A NOTICE OF TERMINATION (NOT) AS SOON AS THE WORK IS FINISHED. BEST MANAGEMENT PRACTICES (BMPs) SHALL BE USED TO PREVENT STORM WATER POLLUTION.

10. CONTRACTOR SHALL BE RESPONSIBLE FOR FIELD LOCATING AND PROTECTING ALL EXISTING WELLS AND PROBES. NOT ALL WELLS AND PROBES ARE SHOWN ON THESE DRAWINGS. DAMAGE TO WELLS BY THE CONTRACTOR SHALL BE REPAIRED OR REPLACED AT THE CONTRACTOR'S EXPENSE.

11. NO HAZARDOUS MATERIALS SHALL BE STORED ONSITE DURING CONSTRUCTION OR OPERATION AND MAINTENANCE.

12. WHERE REFERENCE IS MADE TO STANDARD PLANS OR STANDARD SPECIFICATIONS, IT SHALL REFER TO THE STANDARD PLANS FOR PUBLIC WORKS CONSTRUCTION AND STANDARD SPECIFICATIONS FOR PUBLIC WORKS CONSTRUCTION, 2012 EDITION, UNO. ALL WORK AND MATERIALS ASSOCIATED WITH ROW CONSTRUCTION SHALL CONFORM TO THE MOST CURRENT EDITION OF THE CITY OF WHITTIER OR LOS ANGELES COUNTY STANDARD SPECS.

13. ADDRESS FOR OU-1 SVE SYSTEM IS:
12504/12512 EAST WHITTIER BOULEVARD
WHITTIER, CALIFORNIA 90602

14. NOT USED

15. ENGINEER OF RECORD IS:
RAVI SUBRAMANIAN, PE #C053679
CDM SMITH
555 17th STREET, SUITE 500
DENVER, CO, 80202

A. THE CONTRACTOR SHALL FURNISH ALL NECESSARY DETAIL SURVEYS INCLUDING ALL PIPELINES, CONDUITS, VAULTS, EQUIPMENT PADS, REMEDIATION AND ELECTRICAL EQUIPMENT, AND APPROPRIATE SURVEY POINTS IN THE COORDINATES AND DATUMS LISTED HEREIN. THE CONTRACTOR SHALL INDICATE ON RECORD DRAWINGS ALL DATA ON EXISTING UTILITIES THAT AFFECT THE RIGHT-OF-WAY. RECORD SURVEY INFORMATION SHALL BE SUBMITTED ON 1"-40' SCALE DRAWINGS USING AUTOCAD 2012 OR NEWER, INDICATING LOCATION OF SURVEY POINTS (I.E., NORTHING, EASTING AND ELEVATION). THE AUTOCAD FILES MUST ALSO BE PROVIDED ON DISK WITH SURVEY SUBMITTALS.

B. ALL SURVEY, LAYOUT AND RELATED WORK SHALL BE PERFORMED, STAMPED, AND SIGNED BY A LAND SURVEYOR REGISTERED IN THE STATE OF CALIFORNIA.

C. THE CONTRACTOR'S INSTRUMENTS AND OTHER SURVEY EQUIPMENT SHALL BE ACCURATE (±0.1 FEET), SUITABLE FOR THE SURVEYS REQUIRED IN ACCORDANCE WITH RECOGNIZED PROFESSIONAL STANDARDS, AND IN PROPER CONDITION AND ADJUSTMENT AT ALL TIMES.

D. THE CONTRACTOR SHALL PROMPTLY NOTIFY THE OWNER OR ENGINEER OF ANY DISCREPANCIES DISCOVERED. THE CONTRACTOR SHALL ALSO VERIFY LAYOUT PERIODICALLY DURING CONSTRUCTION.

E. OWNER WILL IDENTIFY EXISTING SITE REFERENCE POINTS, BENCHMARKS, AND PLACEMENTS AS SHOWN ON THE DESIGN DRAWINGS. ADDITIONAL BENCHMARKS THAT THE CONTRACTOR MAY REQUIRE FOR PERFORMANCE OF WORK AND FOR POST-CONSTRUCTION DOCUMENTATION SHALL BE ESTABLISHED BY THE CONTRACTOR AND TIED INTO EXISTING USGS DATA.

SURVEYING ACCURACY AND TOLERANCES IN SETTING OF SURVEY STAKES:

A. CONTROL TRAVERSE FIELD SURVEYS AND COMPUTATIONS SHALL BE PERFORMED TO AN ACCURACY OF AT LEAST 1:25000.

B. THE TOLERANCES GENERALLY APPLICABLE IN SETTING SURVEY STAKES SHALL BE AS SET FORTH BELOW (TABLE 1). SUCH TOLERANCES SHALL NOT SUPERSEDE STRICTER TOLERANCES REQUIRED BY THE DRAWINGS OR SPECIFICATIONS, AND SHALL NOT OTHERWISE RELIEVE THE CONTRACTOR OF RESPONSIBILITY FOR MEASUREMENTS IN COMPLIANCE THEREWITH.

TABLE 1

TYPE OF LINE OR MARK	POSITION	HORIZONTAL ELEVATION
PERMANEMENT REFERENCE POINTS	1 IN 10,000±	+/- 0.01 FEET
GENERAL EXCAVATION AND EARTHWORK	1 IN 2,000±	+/- 0.10 FEET

SURVEYS FOR LAYOUT AND PERFORMANCE OF WORK:

A. THE CONTRACTOR SHALL PERFORM ALL SURVEYS FOR LAYOUT AND PERFORMANCE OF THE PROJECT, REDUCE THE FIELD NOTES, MAKE NECESSARY CALCULATIONS AND PREPARE DRAWINGS NECESSARY TO CARRY OUT SUCH WORK. SUCH WORK SHALL INCLUDE, BUT NOT BE LIMITED TO:

1. STAKED PIPELINE TRENCH ALIGNMENT.
2. JOINTS OF ABOVE- AND BELOW-GRADE PIPELINES.
3. PIPELINE ALIGNMENT EVERY 40 FEET, OR MORE FREQUENTLY AS REQUIRED IN PUBLIC RIGHT-OF-WAYS.
4. PIPELINE GRADE CHANGES

SURVEYS FOR RECORD DRAWINGS:

A. CONTRACTOR SHALL ASSEMBLE CONSTRUCTION DATA AND/OR PERFORM A PIPELINE SURVEY AT THE COMPLETION OF THE PROJECT. THESE SURVEYS SHALL INCLUDE THE FOLLOWING:

1. LOCATION OF SURVEY POINTS (I.E. NORTHING, EASTING AND ELEVATION).
2. AS-BUILT ELEVATION OF THE PIPELINE AND CONDUITS AT INTERVALS OF NOT LESS THAN 10 FEET AND AT ALL SIGNIFICANT GRADE OR DIRECTION CHANGES, AT PIPE CONNECTIONS, TEES, WYES, VALVES, CLEANOUTS, CONDENSATE SUMPS, CHANGES IN PIPELINE ALIGNMENTS FROM APPROVED/PERMITTED CONSTRUCTION DRAWINGS, THE ELEVATIONS OF ALL UTILITY LINES CROSSING AND THE ELEVATION OF THE PIPELINE AT THE CROSSING POINT(S).
3. AS-BUILT ELEVATION OF ALL WELL CASINGS
4. ELEVATIONS OF ALL UTILITY LINE CROSSINGS AND THE ELEVATION OF THE PIPELINE AT THE CROSSING POINTS.
5. LOCATION OF BENCHMARKS.
6. LOCATION OF UTILITY POLES AND ELECTRICAL TRANSFORMERS.
7. LOCATION OF TREATMENT COMPOUND AREA AND ALL EQUIPMENT, PANELS, BUILDING STRUCTURES.

B. AFTER FINAL APPROVAL BY ENGINEER/OWNER, THE CONTRACTOR SHALL SUBMIT THREE SETS OF FINAL RECORD DRAWINGS FOR EACH SURVEY, WHICH SHALL BE STAMPED BY A CALIFORNIA PROFESSIONAL LAND SURVEYOR AND ONE COPY OF THE SURVEY IN ELECTRONIC FORMAT, AUTOCAD 2009 OR NEWER.

SURVEY AND LAYOUT DATA AND RECORD DRAWINGS:

AS-BUILT (RECORD) DRAWINGS:

A. THE CONTRACTOR SHALL MARK UP ONE SET OF DRAWING PRINTS TO SHOW THE AS-BUILT CONDITIONS. THE AS-BUILT MARKED PRINTS SHALL BE NEAT, ACCURATE, AND LEGIBLE AND SHALL BE KEPT CURRENT AND AVAILABLE ON THE JOBSITE AT ALL TIMES. ALL CHANGES FROM THE CONTRACT PLANS WHICH ARE MADE IN THE WORK, OR ADDITIONAL INFORMATION WHICH MIGHT BE UNCOVERED IN THE COURSE OF CONSTRUCTION SHALL BE ACCURATELY AND NEATLY RECORDED AS THEY OCCUR BY MEANS OF DETAILS AND NOTES. THE DRAWINGS SHALL SHOW THE FOLLOWING INFORMATION, BUT NOT BE LIMITED TO:

1. THE LOCATION AND DESCRIPTION OF ANY UTILITY LINES, BELOW-GRADE PERMANENT STRUCTURES OR OTHER INSTALLATIONS OF ANY KIND OR DESCRIPTION EXISTING WITHIN THE CONSTRUCTION AREA. THE LOCATION INCLUDES SURVEY COORDINATES AND DIMENSIONS TO PERMANENT FEATURES.
2. THE LOCATION, ELEVATIONS, AND DIMENSIONS OF ANY CHANGES WITHIN THE SCOPE OF WORK.
3. CHANGES IN DETAILS OF DESIGN OR ADDITIONAL INFORMATION OBTAINED FROM WORKING DRAWINGS SPECIFIED TO BE PREPARED AND/OR FURNISHED BY THE CONTRACTOR INCLUDING BUT NOT LIMITED TO FABRICATION, ERECTION, INSTALLATION PLANS AND PLACING DETAILS, PIPE SIZES, INSULATION MATERIAL, DIMENSIONS OF EQUIPMENT FOUNDATIONS, AND ANY OTHER APPLICABLE ITEM.
4. THE TOPOGRAPHY AND GRADES OF ALL DRAINAGE INSTALLED OR AFFECTED AS A PART OF THE PROJECT CONSTRUCTION.
5. ALL CHANGES OR MODIFICATIONS WHICH RESULT FROM THE FINAL INSPECTION.

B. UPON REVIEW AND APPROVAL, ONE COPY OF THE AS-BUILT MARKED PRINTS WILL BE RETURNED TO THE CONTRACTOR FOR USE IN PREPARATION OF FINAL AS-BUILT DRAWINGS.

DATUM STATEMENT:

BASIS OF BEARINGS
THE BEARINGS SHOWN HEREON ARE BASED ON THE CENTERLINE OF WASHINGTON BLVD. BETWEEN THE FOUND 2-1/2" BRASS DISK STAMPED RE 63 IN WELL, AT THE LAMBERT ROAD INTERSECTION AND THE FOUND SPIKE AND WASHER, LS 5411, AT THE PUTNAM STREET INTERSECTION BEING N78°31'02"E.

COORDINATE DATUM
COORDINATES SHOWN HEREON ARE BASED ON THE CALIFORNIA COORDINATE SYSTEM (CCS83), ZONE 5, 1983 NAD, 2004.0 EPOCH.

BENCHMARK
LOS ANGELES COUNTY BM Y6633
ELEV. 215.036 NAVD88 1995 ADJUSTMENT
BASELINE QUAD
COUNTY ENGINEERS MONUMENT AT THE NORTH END OF A CATCH BASIN 19.7 FEET NORTH OF THE BEGIN CURB RETURN ON WHITTIER BLVD. 59.0 FEET EAST OF THE CENTERLINE OF WHITTIER BLVD. AND 88.6 FEET WEST OF THE CENTERLINE OF PICKERING AVE. MARKED "BM 1-14AB 1961 RE 5869"

RECORD DRAWING

THIS RECORD DRAWING HAS BEEN PREPARED BASED ON A COMBINATION OF INFORMATION PROVIDED BY OTHERS AND BY CDM Smith. THE ENGINEER HAS NOT VERIFIED THE ACCURACY OF ALL THE INFORMATION. TO THE BEST OF THE ENGINEER'S BELIEF AND KNOWLEDGE, THE INCLUDED RECORD INFORMATION IS REASONABLY ACCURATE.

By RAVI SUBRAMANIAN Date JANUARY 2018

CDM Smith

REGISTERED PROFESSIONAL ENGINEER
RAVI SUBRAMANIAN
No. C053679
Exp. 06-30-2019
CIVIL
STATE OF CALIFORNIA

REV. NO.	DATE	DRWN	CHKD	REMARKS
6	1/2018	MP	AFR	RECORD DRAWING (MODIFIED TO DELINIATE OU1)
5	7/2015	TCA	JTB	RECORD DRAWING (MODIFIED FOR FULL-SCALE SYSTEM)
4	1/2014	PJR	JTB	ISSUED FOR CONSTRUCTION
3	7/31/13	PJR	IL	REVISED FOR PDR SUBMITTAL
2	5/17/13	PJR	DDN	REVISED FOR PDR SUBMITTAL
1	10/24/12	PJR	JTB	PDR SUBMITTAL

DESIGNED BY: AFR
DRAWN BY: MP
SHEET CHK'D BY: AFR
CROSS CHK'D BY: JTB
APPROVED BY: RS
DATE: JANUARY 2018

CDM Smith
111 Academy Way, Suite 150
Irvine, California, 92617
Tel: (949) 752-5452

OMEGA CHEMICAL SUPERFUND SITE
OU-1 SOIL VAPOR EXTRACTION SYSTEM
12504 / 12512 EAST WHITTIER BOULEVARD
WHITTIER, CALIFORNIA

GENERAL CIVIL NOTES

PROJECT NO. 10500-216711
FILE NAME: OU1SVE-C-2.DWG

SHEET NO.
C-2

XREFs: [IFC-CDMS_2234-FULL SVE; IFC-CA-Ravi-S-2015; CA-PE-Ravi-S-2019; RECORD DRAWING-ALT-C (JULY 2018)] Images: [Subramanian]
Last saved by: MALAPASSSK Time: 6/25/2018 1:27:10 PM
pw:\\pw.cdmsmith.com:PW_XM1\10500\97168\04 Design Services NM_30%\01 General\10 CADD\01 Working\2015 RECORD DWGS (GW/TS & SVE)\SVE SYSTEM (RECORD DRAWING)\OU1SVE-C-2.dwg
© 2015 CDM SMITH ALL RIGHTS RESERVED.
REUSE OF DOCUMENTS: THESE DOCUMENTS AND DESIGNS PROVIDED BY PROFESSIONAL SERVICE, INCORPORATED HEREIN, ARE THE PROPERTY OF CDM SMITH AND ARE NOT TO BE USED, IN WHOLE OR PART, FOR ANY OTHER PROJECT WITHOUT THE WRITTEN AUTHORIZATION OF CDM SMITH.

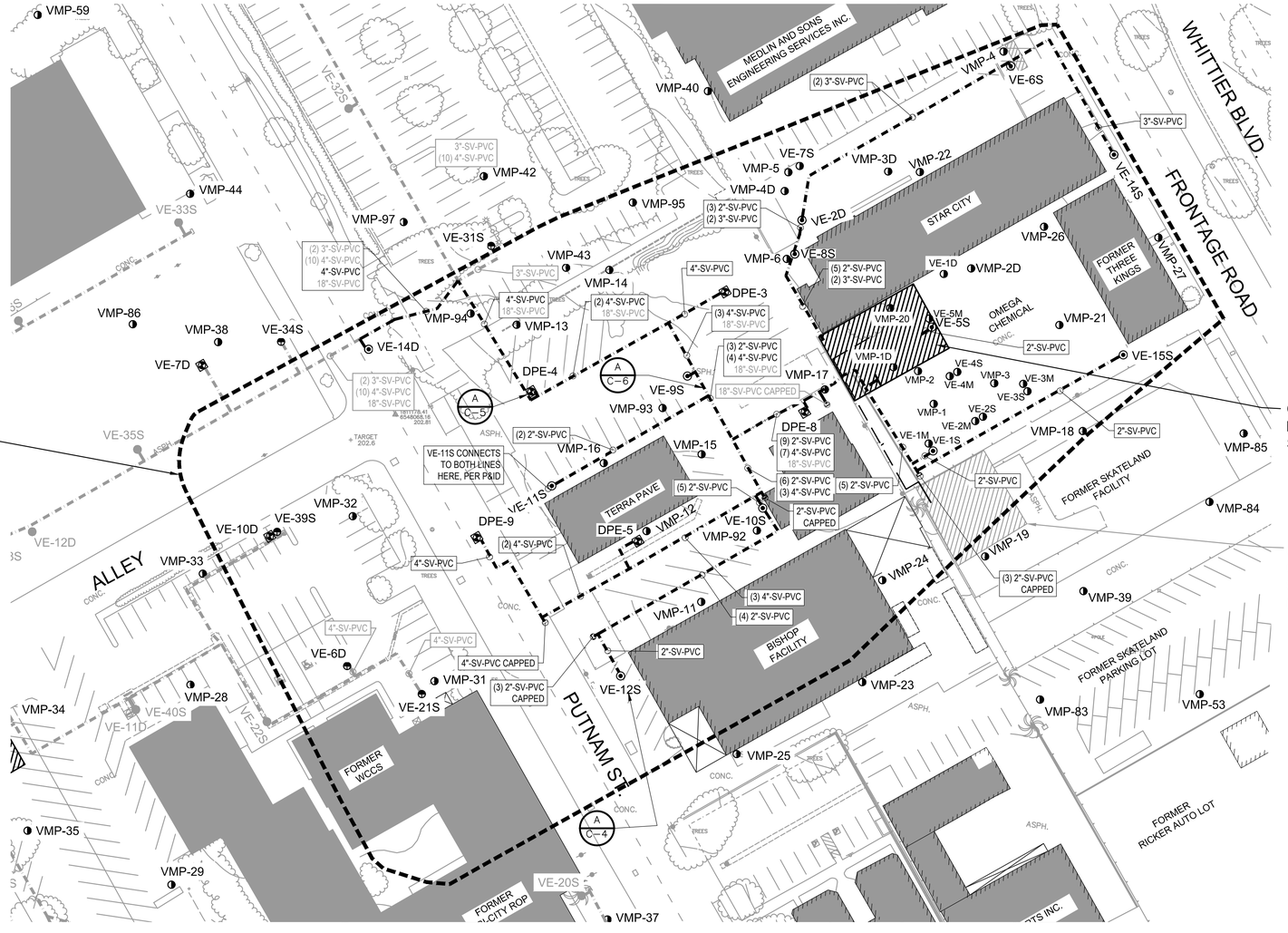

PLAN

1" = 40'

20 0 40

N

NOTES:

1. AS–BUILT SURVEY OF OU–1 INTERIM SVE WELLS, TRENCH CENTERLINE, AND TREATMENT PAD CORNERS PERFORMED BY KDM MERIDIAN, INC ON 2/1/2012.
2. LINES ARE SLOPED TO WELLS OR SUMPS TO ALLOW CONDENSATE COLLECTION. ALL THREE LINES BY VMP–30A/B/C HAVE SUMPS INSTALLED AS SHOWN (SUMP–1, –2, AND –3). SUMPS FOR ALL LINES FROM THE NORTH SIDE OF WCCS/ROP HAVE SUMPS AT THE INFLUENT MANIFOLD (NOT SHOWN HERE). SUMPS ARE 8–INCH DIAMETER AND 28–INCH DEEP.
3. AS–BUILT SURVEY OF NON–INTERIM SYSTEM COMPONENTS CONSISTING OF SVE/DPE WELLS, TRENCH CENTERLINE, AND NEW AOC SVE SYSTEM TREATMENT PAD WAS PERFORMED BY KDM MERIDIAN, INC AND DOCUMENTED IN SURVEY REPORT DATED 1/12/2015.
4. SEE ELECTRICAL DRAWINGS FOR CONDUIT LOCATIONS AND TYPES. SEE GWCS DRAWINGS FOR GWCS PIPING AND OTHER INFRASTRUCTURE.
5. VAPOR EXTRACTION WELLS (VEWS) VE–21S, VE–31S, VE–34S, VE–39S, AND VE–6D AND DUAL PHASE EXTRACTION (DPE) WELLS VE–7D, AND VE–10D ARE CONNECTED TO THE AOC SVE SYSTEM FOR VAPOR TREATMENT BUT ARE OU–1 WELLS, LOCATED WITHIN OU–1 AND REMOVING MASS FROM OU–1.

LEGEND:

- OU–1 SOIL VAPOR EXTRACTION (SVE) LINE
- AOC SVE LINE
- VMP-XX — SOIL VAPOR MONITORING PROBE LOCATION AND DESIGNATION
- VE-XX — OU–1 SOIL VAPOR EXTRACTION WELL LOCATION AND DESIGNATION
- VE-XX — OU–1 SOIL VAPOR EXTRACTION WELL (CONNECTED TO AOC TREATMENT SYSTEM) LOCATION AND DESIGNATION
- VE-XX — AOC SOIL VAPOR EXTRACTION WELL LOCATION AND DESIGNATION
- DPE-X — OU–1 DUAL PHASE EXTRACTION WELL LOCATION AND DESIGNATION
- VE-XD — OU–1 DUAL PHASE EXTRACTION WELL (CONNECTED TO AOC SVE TREATMENT SYSTEM)
- VE-XXD — AOC DUAL PHASE EXTRACTION WELL (NOT PUMPING)
- OU–1 BOUNDARY

NOTE:
SEE SHEET C–1 FOR ADDITIONAL SYMBOLS AND ABBREVIATIONS

RECORD DRAWING

THIS RECORD DRAWING HAS BEEN PREPARED BASED ON A COMBINATION OF INFORMATION PROVIDED BY OTHERS AND BY CDM Smith. THE ENGINEER HAS NOT VERIFIED THE ACCURACY OF ALL THE INFORMATION. TO THE BEST OF THE ENGINEER'S BELIEF AND KNOWLEDGE, THE INCLUDED RECORD INFORMATION IS REASONABLY ACCURATE.

By RAVI SUBRAMANIAN Date JULY 2018

CDM Smith

REGISTERED PROFESSIONAL ENGINEER — RAVI SUBRAMANIAN — No. C053679 Exp. 06–30–2019 — CIVIL — STATE OF CALIFORNIA

REV. NO.	DATE	DRWN	CHKD	REMARKS
9	7/2018	SKM	JTB	RECORD DRAWING (MODIFIED FOR RACR)
8	3/2018	MP	AFR	RECORD DRAWING (MODIFIED TO DELINIATE OU1)
7	8/2015	PJR	MTG	RECORD DRAWING (MODIFIED FOR FULL–SCALE SYSTEM)
6	5/2014	PJR	JTB	REVISED IFC DRAWING – NORTHERN EXPANSION
5	4/2014	PJR	JTB	REVISED IFC DRAWING
4	1/2014	PJR	JTB	ISSUED FOR CONSTRUCTION
3	7/31/13	PJR	IL	REVISED FOR PDR SUBMITTAL

DESIGNED BY: AFR
DRAWN BY: MP
SHEET CHK'D BY: AFR
CROSS CHK'D BY: JTB
APPROVED BY: RS
DATE: JULY 2018

CDM Smith
111 Academy Way. Suite 150
Irvine, California, 92617
Tel: (949) 752-5452

OMEGA CHEMICAL SUPERFUND SITE
OU-1 SOIL VAPOR EXTRACTION SYSTEM
12504 / 12512 EAST WHITTIER BOULEVARD
WHITTIER, CALIFORNIA

OU-1 SVE SYSTEM SITE PLAN

PROJECT NO. 10500–216711
FILE NAME: OU1SVE–C–3.DWG

SHEET NO.
C-3

XREFs: [CDMS_2234 - (RECORD DRAWING), CA-Ravi-S-2017, SVE-GWTS BASE MAP, SURVEY, Wells_Merge_toCAD_06920015, AdditionalWellLocationsCAD2, CA-PE-Ravi-S-2019, SVE-OU-1 BOUNDARY LINE, RECORD DRAWING-ALT-C (JULY 2018)] Images: [Subramanian]
Last saved by: MALPASSSK Time: 6/26/2018 8:42:38 AM
pw:\\pw.cdmsmith.com:PW_XM1\10500\97768\04 Design Services NM_30%\01 General\10 CADD\01 Working\2015 RECORD DWGS (GWTS & SVE)\SVE SYSTEM (RECORD DRAWINGS)\OU1SVE-C-3.dwg
© 2015 CDM SMITH. ALL RIGHTS RESERVED.
REUSE OF DOCUMENTS: THESE DOCUMENTS AND DESIGNS PROVIDED BY PROFESSIONAL SERVICE, INCORPORATED HEREIN, ARE THE PROPERTY OF CDM SMITH AND ARE NOT TO BE USED, IN WHOLE OR PART, FOR ANY OTHER PROJECT WITHOUT THE WRITTEN AUTHORIZATION OF CDM SMITH.

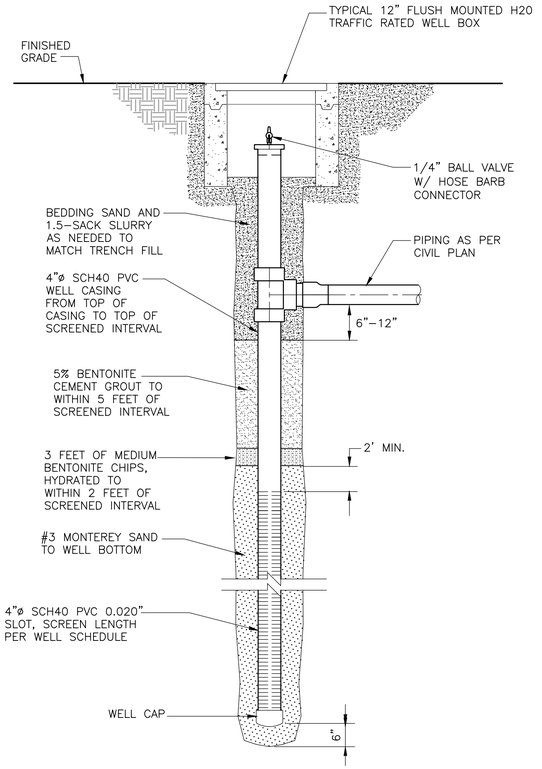

TYPICAL VAPOR EXTRACTION WELL (VEW)

DETAIL A
NTS –

OU-1 Vapor Extraction Well Schedule

Extraction Well ID	SVE Treatment System	Diameter (In.)	Total Depth (Feet Bgs)	Screened Interval (Feet Bgs)		Coordinates	
				Top	Bottom	Northing	Easting
VE-1S	OU-1	4	23	12.5	22.5	1811157.14	6548381.19
VE-5S	OU-1	4	23	12	22	1811229.21	6548380.51
VE-6S	OU-1	4	30	10	30	1811381.18	6548426.45
VE-8S	OU-1	4	30	10	30	1811271.82	6548300.72
VE-9S	OU-1	4	30	10	30	1811200.74	6548238.16
VE-10S	OU-1	4	30	10	30	1811123.89	6548282.04
VE-11S	OU-1	4	30	10	30	1811137.65	6548159.80
VE-12S	OU-1	4	30	10	30	1811026.18	6548199.24
VE-14S	OU-1	4	30	10	30	1811329.61	6548486.51
VE-15S	OU-1	4	30	10	30	1811213.08	6548491.98
VE-21S	AOC	4	30	10	30	1811015.60	6548083.49
VE-31S	AOC	4	30.5	10	30	1811276.55	6548123.87
VE-34S	AOC	4	30.5	10	30	1811220.76	6548001.52
VE-39S	AOC	4	30.5	10	30	1811110.06	6547999.23
VE-2D	OU-1	4	70.5	35	70	1811263.48	6548403.58
VE-6D	AOC	4	101.5	40	100	1811031.92	6548039.97
VE-14D	OU-1	4	101.5	40	100	1811216.33	6548052.49

RECORD DRAWING

THIS RECORD DRAWING HAS BEEN PREPARED BASED ON A COMBINATION OF INFORMATION PROVIDED BY OTHERS AND BY CDM Smith. THE ENGINEER HAS NOT VERIFIED THE ACCURACY OF ALL THE INFORMATION. TO THE BEST OF THE ENGINEER'S BELIEF AND KNOWLEDGE, THE INCLUDED RECORD INFORMATION IS REASONABLY ACCURATE.

By RAVI SUBRAMANIAN Date MARCH 2018

CDM Smith

REGISTERED PROFESSIONAL ENGINEER
RAVI SUBRAMANIAN
No. C053679
Exp. 06-30-2019
CIVIL
STATE OF CALIFORNIA

REV. NO.	DATE	DRWN	CHKD	REMARKS
6	3/2018	MP	AFR	RECORD DRAWING (MODIFIED TO DELINIATE OU1)
5	7/2015	PJR	MTG	RECORD DRAWING (MODIFIED FOR FULL-SCALE SYSTEM)
4	1/2014	PJR	JTB	ISSUED FOR CONSTRUCTION
3	7-31-13	PJR	IL	REVISED FOR PDR SUBMITTAL
2	5/17/13	PJR	DDN	REVISED FOR PDR SUBMITTAL
1	10/24/12	PJR	JTB	PDR SUBMITTAL

DESIGNED BY: AFR
DRAWN BY: MP
SHEET CHK'D BY: AFR
CROSS CHK'D BY: JTB
APPROVED BY: RS
DATE: MARCH 2018

CDM Smith
111 Academy Way. Suite 150
Irvine, California, 92617
Tel: (949) 752-5452

OMEGA CHEMICAL SUPERFUND SITE
OU-1 SOIL VAPOR EXTRACTION SYSTEM
12504 / 12512 EAST WHITTIER BOULEVARD
WHITTIER, CALIFORNIA

SOIL VAPOR EXTRACTION WELL DETAIL AND SCHEDULE

PROJECT NO. 10500-216711
FILE NAME: OU1SVE-C-4.DWG

SHEET NO.
C-4

XREFs: [IFC-CA-Ravi-S-2015, CDMS_2234 - (RECORD DRAWING), CA-PE-Ravi-S-2019, RECORD DRAWING-ALT-C (JULY 2018)] Images: [Subramanian]
w: Last saved by: MALPASSSK Time: 6/26/2018 2:17:46 PM
pw://pw.cdmsmith.com:PW_XM11\10500\97768\04 Design Services NM_30%\01 General\10 CADD\01 Working\2015 RECORD DWGS (GWTS & SVE)\SVE SYSTEM (RECORD DRAWINGS)\OU1SVE-C-4.dwg
© 2015 CDM SMITH. ALL RIGHTS RESERVED.
REUSE OF DOCUMENTS: THESE DOCUMENTS AND DESIGNS PROVIDED BY PROFESSIONAL SERVICE, INCORPORATED HEREIN, ARE THE PROPERTY OF CDM SMITH AND ARE NOT TO BE USED, IN WHOLE OR PART, FOR ANY OTHER PROJECT WITHOUT THE WRITTEN AUTHORIZATION OF CDM SMITH.

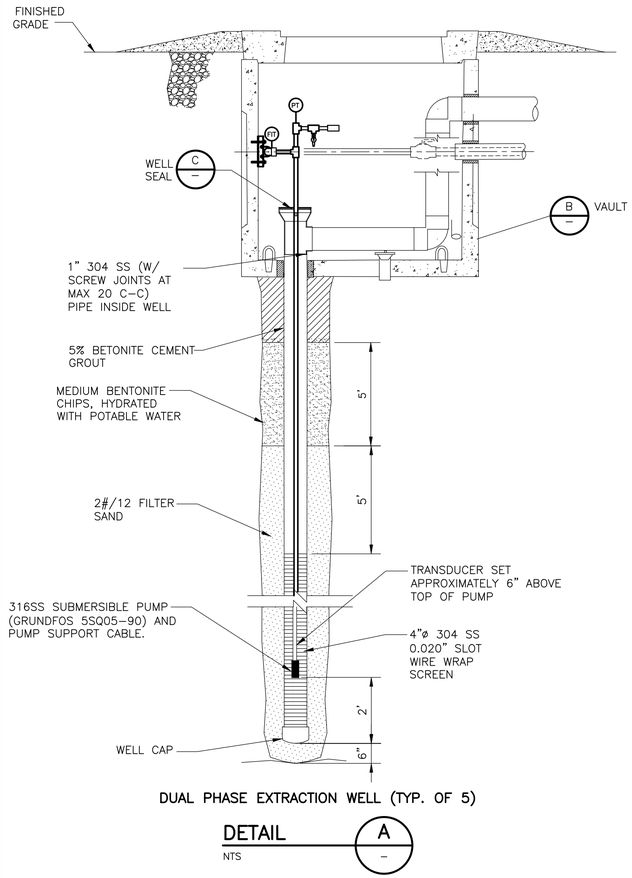

DUAL PHASE EXTRACTION WELL (TYP. OF 5)

DETAIL A
NTS

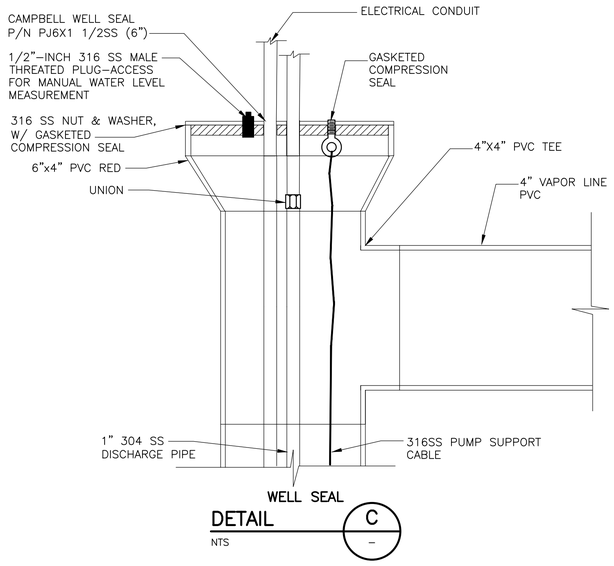

DETAIL C
NTS

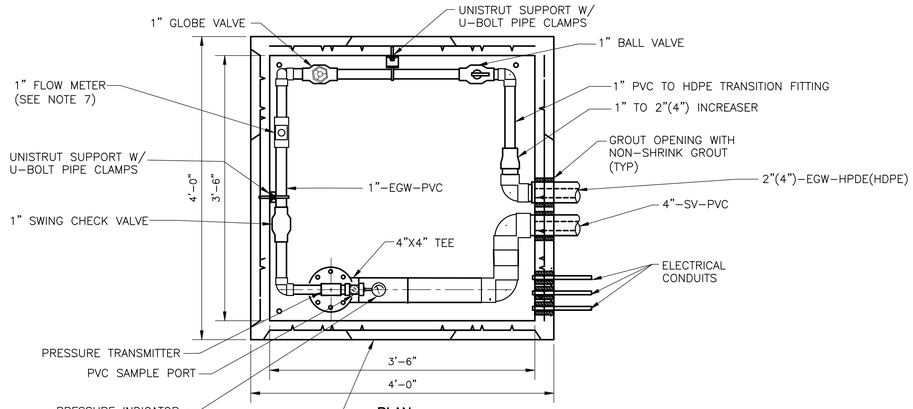

PLAN

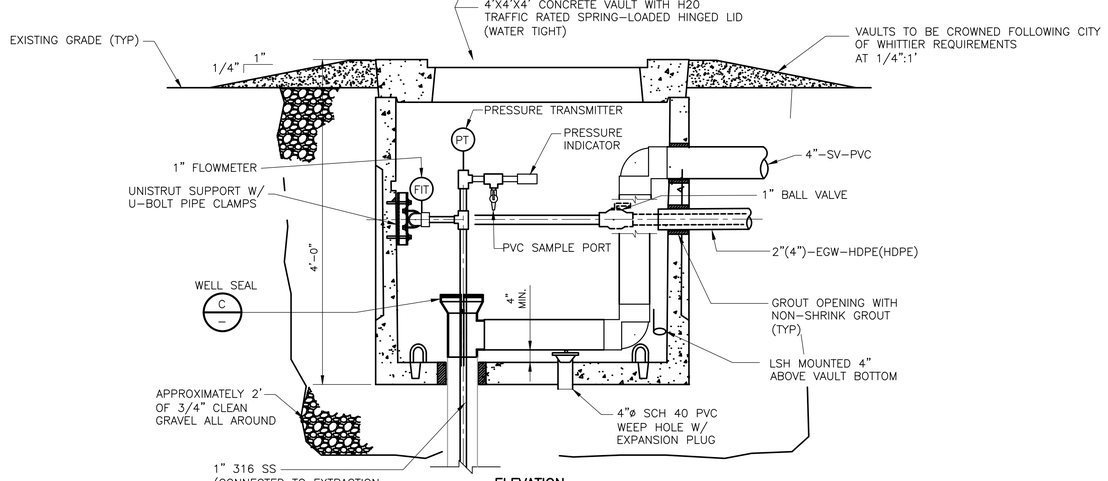

ELEVATION

DPE WELL VAULT
(TYP. OF WELLS DPE-3, DPE-4, DPE-5, DPE-8 AND DPE-9)

DETAIL B
NTS

NOTES:

1. ELECTRICAL INFORMATION INCLUDING NO. AND SIZE OF CONDUITS AND CONDUCTORS PROVIDED ON ELECTRICAL DRAWINGS.
2. ACTUAL ORIENTATION OF SAMPLE PORTS AND GAUGES MAY DIFFER FROM WHAT IS SHOWN TO ALLOW EASY ACCESS FOR OBSERVATION AND MAINTENANCE.
3. PIPE THREAD COMPOUND SHALL BE USED ON ALL RISER CONNECTIONS, PER MANUFACTURER'S RECOMMENDATIONS.
4. DROP CABLE SHALL BE CAPABLE OF SUPPORTING PIPE, PUMP, AND WATER WEIGHT (APPROXIMATELY 300 LBS PER EACH WELL) AND SHALL NOT CORRODE IN WELL WATER.
5. ALL PUMPS, PIPES, HOSES, FLOWMETERS, VALVES, INSTRUMENTS AND OTHER FITTINGS SHALL BE INSTALLED PER MANUFACTURERS RECOMMENDATIONS.
6. PLEASE REFER TO THE P&IDs AND ELECTRICAL SHEETS FOR MORE DETAILS.
7. VAPOR REMOVED FROM THESE OU-1 DUAL PHASE EXTRACTION WELLS IS CONVEYED EITHER TO THE OU-1 SVE SYSTEM, OR THE AOC SVE SYSTEM FOR TREATMENT. WATER REMOVED FROM THESE OU-1 WELLS IS CONVEYED TO THE GROUNDWATER CONTAINMENT SYSTEM (GWCS) FOR TREATMENT. REFER TO SCHEDULE ON THIS SHEET.
8. WELLS WILL BE INSTALLED AND DRILLED BY OTHERS. CONTRACTOR SHALL DEMO ANY EXISTING WELL BOX AND SURFACE COMPLETION INSTALLED BY OTHERS AND MODIFY TO MATCH AS SHOWN ON DETAIL.
9. MAINTAIN FLOWMETER LOCATION AT 10-PIPE DIAMETERS UPSTREAM AND 5-PIPE DIAMETERS DOWNSTREAM OF VALVES AND FITTINGS ON PIPING.
10. ALL VALVES TO BE TRUE UNION, UNO.
11. ALL FLOWMETERS TO BE INSTALLED SO THAT THEY CAN BE EASILY REMOVED FOR MAINTENANCE.
12. VAPOR PIPING SHALL BE INSTALLED TO SLOPE DOWN TOWARD THE DPE WELL AT APPROXIMATELY 0.5% IF FEASIBLE. CONTRACTOR SHALL INSTALL LOW POINT MOISTURE REMOVAL SUMPS AS NEEDED.
13. FOR DETAILS, SEE WELL SCHEDULE.
14. bTOC IS MEASURED FROM THE TOP OF THE WELL SEAL FLANGE.

OU-1 Dual Phase Extraction Well Schedule

Extraction Well ID	Treatment System (See Note 7)	Diameter (In.)	Total Depth (Feet Bgs)	Screened Interval (Feet Bgs)		Coordinates	
				Top	Bottom	Northing	Easting
VE-7D	AOC SVE / GWCS	4.00	101.50	40.00	100.00	1811206.67	6547955.48
VE-10D	AOC SVE / GWCS	4.00	101.50	40.00	100.00	1811107.34	6547994.76
DPE-3	OU-1 SVE / GWCS	4.00	101.50	40.00	100.00	1811249.72	6548260.07
DPE-4	OU-1 SVE / GWCS	4.00	101.50	40.00	100.00	1811191.72	6548147.32
DPE-5	OU-1 SVE / GWCS	4.00	101.50	40.00	100.00	1811104.56	6548209.37
DPE-8	OU-1 SVE / GWCS	4.00	101.50	40.00	100.00	1811179.92	6548306.53
DPE-9	OU-1 SVE / GWCS	4.00	101.50	40.00	100.00	1811106.68	6548115.52

RECORD DRAWING

THIS RECORD DRAWING HAS BEEN PREPARED BASED ON A COMBINATION OF INFORMATION PROVIDED BY OTHERS AND BY CDM Smith. THE ENGINEER HAS NOT VERIFIED THE ACCURACY OF ALL THE INFORMATION. TO THE BEST OF THE ENGINEER'S BELIEF AND KNOWLEDGE, THE INCLUDED RECORD INFORMATION IS REASONABLY ACCURATE.

By RAVI SUBRAMANIAN Date MARCH 2018

CDM Smith

REGISTERED PROFESSIONAL ENGINEER — RAVI SUBRAMANIAN — No. C053679 Exp. 06-30-2019 — CIVIL — STATE OF CALIFORNIA

REV. NO.	DATE	DRWN	CHKD	REMARKS
4	3/2018	MP	AFR	RECORD DRAWING (MODIFIED TO DELINIATE OU1)
3	8/2015	PJR	MTG	RECORD DRAWING (MODIFIED FOR FULL SCALE SYSTEM)
2	1/2014	PJR	JTB	ISSUED FOR CONSTRUCTION
1	7/31/13	PJR	IL	REVISED PER PDR SUBMITTAL

DESIGNED BY: AFR
DRAWN BY: MP
SHEET CHK'D BY: AFR
CROSS CHK'D BY: JTB
APPROVED BY: RS
DATE: MARCH 2018

CDM Smith
111 Academy Way. Suite 150
Irvine, California, 92617
Tel: (949) 752-5452

OMEGA CHEMICAL SUPERFUND SITE
OU-1 SOIL VAPOR EXTRACTION SYSTEM
12504 / 12512 EAST WHITTIER BOULEVARD
WHITTIER, CALIFORNIA

DUAL- PHASE EXTRACTION WELLHEAD CONSTRUCTION DETAILS AND SCHEDULE

PROJECT NO. 10500-216711
FILE NAME: OU1SVE-C-5.DWG
SHEET NO.
C-5

XREFs: I:\FC-CA-Ravi-S-2015_IFC-CDMS_2234_RECORD DRAWING-ALT-C (AUGUST 2015), CA-PE-Ravi-S-2019_RECORD DRAWING-ALT-C (JULY 2018)] Images: [Subramanian]
Last saved by: MALPASSSK Time: 9/6/2018 7:56:23 AM
pw:\\pw.cdmsmith.com:PW_X\f1105809776\04 Design Services NM_30%\01 General\10 CADD\01 Working\2015 RECORD DWGS (GWTS & SVE)\SVE SYSTEM (RECORD DRAWINGS)\OU1SVE-C-5.dwg
© 2015 CDM SMITH. ALL RIGHTS RESERVED.
REUSE OF DOCUMENTS. THESE DOCUMENTS AND DESIGNS PROVIDED BY PROFESSIONAL SERVICE, INCORPORATED HEREIN, ARE THE PROPERTY OF CDM SMITH AND ARE NOT TO BE USED, IN WHOLE OR PART, FOR ANY OTHER PROJECT WITHOUT THE WRITTEN AUTHORIZATION OF CDM SMITH.

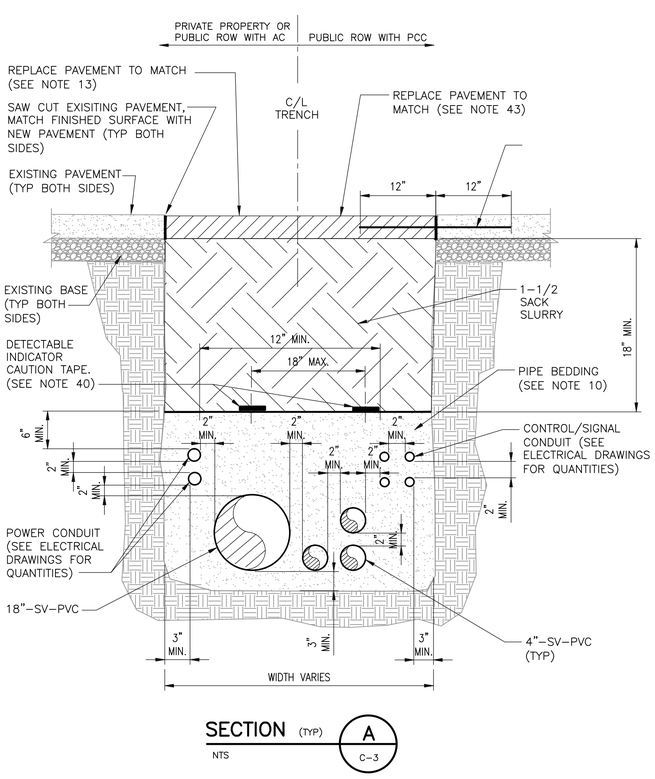

SECTION (TYP) A C-3

NTS

EXCAVATION NOTES

1. ALL ASPHALT AND CONCRETE PAVEMENT SHALL BE SAWCUT TO THE FULL DEPTH PRIOR TO REMOVAL.

2. EXCAVATE THE TRENCH TO THE LINES AND GRADES SHOWN ON THE DRAWINGS WITH ALLOWANCE FOR PIPE THICKNESS, FOR PIPE BASE, FOR FOUNDATION STABILIZATION OR SPECIAL BEDDING, WHERE APPLICABLE. IF THE TRENCH IS INADVERTENTLY EXCAVATED BELOW THE REQUIRED GRADE, REFILL ANY PART OF THE TRENCH EXCAVATED BELOW THE GRADE AT NO ADDITIONAL COST TO THE OWNER WITH CEMENT SLURRY AS SPECIFIED HEREIN. PLACE THE REFILLING MATERIAL OVER THE FULL WIDTH OF THE TRENCH IN COMPACTED LAYERS NOT EXCEEDING 6 INCHES DEEP TO THE ESTABLISHED GRADE WITH ALLOWANCE FOR THE PIPE BASE OR SPECIAL BEDDING. MATERIAL CONTAINING ROCKS OR COBBLES LARGER THAN 2 INCHES IN MAXIMUM DIMENSION SHALL NOT BE PERMITTED WITHIN 6 INCHES OF THE PIPE.

3. THE CONTRACTOR SHALL HAVE THE TRENCH INSPECTED BY THE OWNER OR THE ENGINEER. IN ADDITION, TRENCHES IN PUBLIC ROW SHALL BE INSPECTED AND APPROVED AS REQUIRED BY THE PERMITTING AGENCY.

4. SUBGRADE SURFACE SHALL BE RELATIVELY FREE OF DEBRIS, FOREIGN OBJECTS, LOOSE ORGANICS, AND OTHER DELETERIOUS MATERIALS AND SHALL BE SCARIFIED TO A DEPTH OF 12 INCHES; MOISTURE CONDITIONED, AND COMPACTED TO A MINIMUM OF 90 PERCENT OF MAXIMUM DRY DENSITY, IN ACCORDANCE WITH THE REQUIREMENTS OF ASTM D1557 (PROCTOR DENSITY TESTS), UNLESS NOTED OTHERWISE. MORE STRINGENT COMPACTION REQUIREMENTS (95 PERCENT OF MAXIMUM DENSITY) MAY BE REQUIRED BY THE PERMITTING AGENCIES.

5. IN AREAS OF SUBGRADE PREPARATION WHERE SOFT SOILS ARE ENCOUNTERED, REMOVE AND REPLACE THE SOIL TO A MINIMUM DEPTH OF 1 FOOT BELOW THE PROPOSED SUBGRADE ELEVATION. FILL THE AREA WITH NATIVE OR IMPORT FILL AND COMPACT TO AT LEAST 95 PERCENT MAXIMUM DRY DENSITY AT A MOISTURE CONTENT THAT LIES WITHIN 3 PERCENT OF THE OPTIMUM MOISTURE CONTENT.

6. DO NOT COMPACT FILL MATERIAL AT TEMPERATURES BELOW 32°F, UNLESS OTHERWISE AUTHORIZED IN WRITING BY THE OWNER. DO NOT PLACE FILL DURING PERIODS OF PRECIPITATION. PLACEMENT MAY OCCUR DURING PERIODS OF MISTING OR DRIZZLE, IF AUTHORIZED BY THE OWNER.

7. EXCAVATED MATERIAL FROM TRENCHES LOCATED WITHIN PAVED AREAS SHALL BE IMMEDIATELY LOADED INTO TRUCKS, HAULED OFF AND DISPOSED OFF SITE. NO EXCAVATED MATERIAL SHALL BE PLACED OR STORED WITHIN PUBLIC ROW.

FILL MATERIALS

8. WHERE APPLICABLE, SOIL REMOVED FROM SITE EXCAVATION AND TRENCHING MAY BE USED FOR BACKFILLING PROVIDED IT IS APPROVED BY THE ENGINEER. WHERE USED, ANY IMPORT FILL TO BE USED SHALL NOT CONTAIN ROCKS OR LUMPS LARGER THAN 5 INCHES IN GREATEST DIMENSION, WITH NO MORE THAN 15 PERCENT BY WEIGHT LARGER THAN 3 INCHES.

9. CONTRACTOR SHALL PROVIDE EQUIPMENT AND MANPOWER FOR COLLECTING REPRESENTATIVE SAMPLES OF ALL IMPORT FILL MATERIALS. FILL MATERIALS SHALL BE SAMPLED AND TESTED FOR VOLATILE ORGANIC COMPOUNDS (VOCS), TOTAL PETROLEUM HYDROCARBONS (TPH) AND OTHER COMPOUNDS AS DIRECTED BY THE OWNER AT A MINIMUM FREQUENCY OF ONCE EVERY 10,000 CUBIC YARDS AND A MINIMUM OF ONCE PER BORROW SITE TO VERIFY THAT THE FILL IS CLEAN AND CONTAMINATION FREE.

10. BEDDING MATERIAL USED FOR BEDDING AND BACKFILLING PIPE AND UTILITIES SHALL BE NATURAL RIVER OR BANK SAND; WASHED; FREE OF SILT, CLAY, LOAM, FRIABLE OR SOLUBLE MATERIALS, ORGANIC MATTER; GRADED IN ACCORDANCE WITH ASTM D2487 GROUP SYMBOL SP; AND WITHIN THE FOLLOWING GRADATION LIMITS:

SIEVE SIZE	PERCENT (BY WEIGHT) PASSING SIEVE
2 INCHES	100
NO. 4	70-100
NO. 16	35-75
NO. 50	10-40
NO. 200	0-10

11. MINIMUM SAND EQUIVALENT SHALL BE 30 PER ASTM D-2419.

12. CONCRETE (CEMENT) SLURRY BACKFILL, WHERE USED, SHALL CONSIST OF A FLUID, WORKABLE MIXTURE OF AGGREGATE, CEMENT AND WATER.
   A. CEMENT SHALL BE PORTLAND CEMENT WHICH SHALL BE EITHER TYPE IP (MS) MODIFIED" CEMENT, "TYPE II MODIFIED" PORTLAND CEMENT OR TYPE V PORTLAND CEMENT CONFORMING TO THE SECTION 90-2.01 OF CALTRANS STANDARD SPECIFICATIONS EXCEPT THAT TESTING WILL NOT BE REQUIRED.
   B. WATER USED FOR CEMENT SLURRY BACKFILL SHALL BE FREE FROM OIL, SALTS AND OTHER IMPURITIES WHICH WOULD HAVE AN ADVERSE EFFECT ON THE QUALITY OF THE BACKFILL MATERIAL.
   C. AT THE OPTION OF THE CONTRACTOR, AGGREGATE SHALL BE EITHER (1) IMPORTED MATERIAL, WHICH IS FREE OF ORGANIC MATERIAL AND OTHER DELETERIOUS SUBSTANCES, OR (2) COMMERCIAL QUALITY CONCRETE SAND. IN EITHER CASE, MATERIAL SELECTED SHALL MEET THE FOLLOWING GRADING:

SIEVE SIZE	PERCENT (BY WEIGHT) PASSING SIEVE
11/2"	100
1"	80 - 100
3/4"	60 - 100
3/8"	50 - 100
NO. 4	40 - 80
NO. 100	10 - 40

   D. THE AGGREGATE, CEMENT AND WATER SHALL BE PROPORTIONED EITHER BY WEIGHT OR BY VOLUME. NOT LESS THAN 141 POUNDS OF CEMENT (1.5 SACKS) SHALL BE USED FOR EACH CUBIC YARD OF MATERIAL PRODUCED. THE WATER CONTENT SHALL BE SUFFICIENT TO PRODUCE A FLUID, WORKABLE MIX THAT WILL FLOW AND CAN BE PUMPED WITHOUT SEGREGATION OF THE AGGREGATE WHILE BEING PLACED.
   E. MATERIALS FOR CEMENT SLURRY BACKFILL SHALL BE THOROUGHLY MACHINE MIXED IN A PUGMILL, ROTARY DRUM, OR OTHER APPROVED MIXER. MIXING SHALL CONTINUE UNTIL THE CEMENT AND WATER ARE THOROUGHLY DISPERSED THROUGHOUT THE MATERIAL. CEMENT SLURRY BACKFILL SHALL BE PLACED IN THE WORK WITHIN ONE HOUR AFTER MIXING.

13. ASPHALTIC CONCRETE (AC) PAVEMENT SHALL BE HOT-LAID PLANT MIX ("HOT MIX") OR ENGINEER APPROVED EQUAL. AC SHALL BE 1/2" AC-C2, MAX 15% RAP, WITH PG 64-10 BINDER OR ENGINEER-APPROVED ALTERNATIVE. NEW AC SHALL BE PLACED OVER THE TRENCH WIDTH TO MATCH EXISTING GRADE WITH A TOTAL THICKNESS OF 1 INCH (MIN) OVER EXISTING THICKNESS.

14. NOT USED

15. CONCRETE BLANKET IS REQUIRED PER CITY OF LOS ANGELES DEPARTMENT OF PUBLIC WORKS (LADPW) STD. PLAN S-255-1 FOR NEW PIPE/CONDUIT CROSSING OVER EXISTING PIPE/CONDUIT WHEN THE CLEARANCE BETWEEN THE TOP OF EXISTING PIPE/CONDUIT AND THE BOTTOM OF CROSSING PIPE CONDUIT IS LESS THAN 18 INCHES.

16. WHERE APPLICABLE, SUPPORTS FOR EXISTING STORM DRAIN AND SEWER PIPES ACROSS TRENCHES CROSS UNDER BY NEW PIPE/CONDUIT SHALL BE PER LADPW STD-S253-0.

17. WHERE APPLICABLE, SUPPORTS FOR EXISTING CONDUITS ACROSS TRENCHES CROSSED UNDER BY NEW PIPE/CONDUIT SHALL BE PER SPPWC STD PLAN 224-1.

PIPE AND CONDUIT NOTES

18. ADDITIONAL PIPE INFORMATION IS PRESENTED ON THE PIPING AND INSTRUMENTATION DIAGRAMS (P&IDS). ADDITIONAL CONDUIT INFORMATION PRESENTED ON ELECTRICAL DRAWINGS.

19. UNLESS OTHERWISE ACCEPTABLE TO THE ENGINEER, SLOPE SVE AND DPE VAPOR CONVEYANCE PIPING TOWARDS THE WELLS TO ELIMINATE HIGH SPOTS WHEREVER POSSIBLE, AT 0.005 FT/FT MIN. IF NOT POSSIBLE, INSTALL SUMPS CONSISTENT WITH EXISTING ISVE2 PIPING SUMPS.

20. ALL UNDERGROUND PIPES SHALL BE SUPPORTED WITH TEMPORARY JIGS OR TEMPLATES DURING CONSTRUCTION TO MAINTAIN THE REQUIRED SPACING BETWEEN PIPES AND SLOPE. JIGS AND TEMPLATES SHALL BE DESIGNED AND PLACED SO THAT THEY DO NOT PINCH THE PIPE OR CONSTRUCT THE FLOW OF FLUID WHEN IN USE.

21. PRESSURE PIPING SHALL BE TESTED AT 25% GREATER THAN MAXIMUM OPERATING PRESSURE. VACUUM PIPING AND DUAL CONTAINED PIPE ANNULAR SPACE SHALL BE PRESSURE TESTED WITH COMPRESSED AIR AT 10 PSIG. IF TEST PRESSURES DROP (AFTER ALLOWANCE FOR PIPE EXPANSION ALLOWED BY MANUFACTURER, AND RECHARGE TO TEST PRESSURE), WITHIN A TWO HOURS PERIOD, THE PIPE SHALL BE REPAIRED AND RETESTED AT THE CONTRACTOR'S EXPENSE TO MEET THE ABOVE REQUIREMENTS. THE ENGINEER SHALL BE NOTIFIED 24 HOURS PRIOR TO ANY SUCH TEST AND MUST APPROVE TEST RESULTS IN WRITING PRIOR TO BACKFILL.

22. ALL PVC PIPING, VALVES, AND FITTINGS FOR SOIL VAPOR CONVEYANCE SHALL BE SCH40, AND SHALL BE JOINED BY SOLVENT WELDED IN ACCORDANCE WITH MANUFACTURER'S RECOMMENDATIONS, ALL JOINTS SHALL ALIGN NATURALLY AND BE STRESS FREE.

23. ALL PIPELINES SHALL HAVE MINIMUM VERTICAL AND HORIZONTAL CLEARANCES FROM OTHER UNDERGROUND UTILITIES AS REQUIRED BY THE PERMITTING AGENCY STANDARDS AND OTHER LOCAL AND STATE REGULATIONS.

24. ALL PIPING SYSTEM COMPONENTS (I.E., PIPE, FITTINGS, REDUCERS, ETC.) SHALL BE OF THE SAME MATERIAL. HDPE PIPE SHALL BE MANUFACTURED IN THE USA AND IN ACCORDANCE WITH THE REQUIREMENTS OF ASTM F714 AND AWWA C906. HDPE SOLID WALL PIPE SHALL BE MADE FROM A PLASTIC COMPOUND MEETING THE REQUIREMENTS OF STANDARD PE CODE DESIGNATION PE-3408 AS DEFINED BY ASTM D2837 AND ASTM D3350. DUAL CONTAINED HDPE AND FITTINGS SHALL HAVE IPS OD AND SHALL MEET ASTM D 3035. DUAL CONTAINED HDPE PIPE SHALL BE SDR 11 (INNER) AND SDR 17 (OUTER) AND HAVE A PRESSURE RATING OF 160 PSIG AT 73.4°F. HDPE PIPE SHALL BE JOINED BY BUTT FUSION IN ACCORDANCE WITH MANUFACTURER'S RECOMMENDED PROCEDURES. REQUIREMENTS FOR FUSION TIME, TEMPERATURE, AND PRESSURE SHALL BE FOLLOWED. ALL PIPE JOINTS SHALL ALIGN NATURALLY AND BE STRESS FREE. ALL BENDS SHALL BE 3' MIN RADIUS.

25. CONTRACTOR SHALL JOIN HDPE PIPING TO PVC FITTINGS USING TRANSITION COUPLINGS, FOLLOWING MANUFACTURER'S RECOMMENDATIONS AND AS APPROVED BY THE ENGINEER.

26. CONDUIT INSTALLATION REQUIREMENTS
   A. ALL UNDERGROUND SUBSTRUCTURES AND CONDUITS, IN WHICH THE LADWP INSTALLS AND MAINTAINS CABLES, AND ANY OTHER ASSOCIATED DISTRIBUTION SYSTEM COMPONENTS SHALL BE CONSTRUCTED IN ACCORDANCE WITH THE REQUIREMENTS OF LADWP UNDERGROUND CONDUIT AND SUBSTRUCTURES SPECIFICATION NO. 104 (REVISED 03-09-06) AND AS FOLLOWS:
      I FOR INSTALLATION ON PRIVATE PROPERTY: UNDERGROUND CONSTRUCTION STANDARD (UCS) DRAWING H-168 AS LAST REVISED AND PROJECT SPECIFIC ELECTRICAL SERVICE REQUIREMENTS (ESR) TO BE PROVIDED BY LADWP.
      II FOR INSTALLATION ON PUBLIC PROPERTY: SECTION 62.00-62.05 OF THE LOS ANGELES MUNICIPAL CODE AND SSPWC.
   B. MINIMUM COVER/BURIAL DEPTH FOR NEW CONDUITS IS 24 INCHES ON PRIVATE PROPERTY. MINIMUM COVER/BURIAL DEPTH FOR NEW CONDUIT INSTALLATION ON ROAD SURFACE AREA OR PARKWAY AREA (AREA BETWEEN CURB AND PROPERTY LINE) ON PUBLIC PROPERTY IS 30 INCHES BELOW GUTTER GRADE IN CITY STREETS.
   C. SEPARATION BETWEEN NEW CONDUITS
      I PROVIDE A MINIMUM OF 2-INCH SPACING BETWEEN ALL ADJACENT CONDUITS, UNLESS NOTED OTHERWISE. A 2-INCH SAND LAYER AS SHOWN SHALL BE USED WHERE CONDUITS ARE PLACED ON THE TOP OF EACH OTHER.
      II PROVIDE A MINIMUM OF 12-INCH SPACING BETWEEN POWER AND INSTRUMENTATION CONDUITS.
   D. SEPARATION BETWEEN NEW CONDUITS AND EXISTING UTILITIES
      I CONDUIT SECTION(S) AS SHOWN ON THE DRAWINGS SHALL BE CONSTRUCTED UNDER EXISTING CROSSING UNDERGROUND UTILITIES AND SUBSTRUCTURES, UNLESS BY CONSTRUCTING OVER THE EXISTING UTILITIES THE MINIMUM COVER REQUIREMENTS AS SPECIFIED ABOVE ARE MET.
      II PROVIDE A MINIMUM CLEARANCE OF 6 INCHES BETWEEN THE CONDUITS AND OTHER EXISTING CROSSING UTILITIES.
      III PROVIDE A MINIMUM CLEARANCE OF 12 INCHES BETWEEN THE CONDUIT AND EXISTING UTILITY WHEN PARALLELING OTHER EXISTING UTILITIES.

27. ELECTRICAL CONDUIT FOR WELL PUMPS SHALL FOLLOW PROCESS LINE TRENCHES. SPARE CONDUIT SHALL BE CAPPED TO PROTECT AGAINST INFLUX OF SOIL AND DEBRIS.

BACKFILL AND COMPACTION

28. BEDDING OF THE PIPE SHALL BE DONE IN ACCORDANCE WITH THE DRAWINGS AND AS REQUIRED BY THE PERMITTING AGENCY, WHERE APPLICABLE. CARE SHALL BE TAKEN TO PREVENT ANY DAMAGE OR SHIFTING OF THE PIPE.

29. AFTER PIPE HAS BEEN BEDDED, PLACE BEDDING MATERIAL SIMULTANEOUSLY ON BOTH SIDES OF THE PIPE, KEEPING THE LEVEL OF BEDDING THE SAME ON EACH SIDE. CAREFULLY PLACE THE MATERIAL AROUND THE PIPE SO THAT THE PIPE BARREL IS COMPLETELY SUPPORTED AND THAT NO VOIDS OR UNCOMPACTED AREAS ARE LEFT BENEATH THE PIPE. USE PARTICULAR CARE IN PLACING MATERIAL ON THE UNDERSIDE OF THE PIPE TO PREVENT LATERAL MOVEMENT DURING SUBSEQUENT BACKFILLING.

30. THE CONTRACTOR SHALL INSTALL AND COMPACT A SECOND LAYER OF APPROVED BACKFILL MATERIAL UNLESS NOTED OTHERWISE. PLACE THE BACKFILL MATERIAL CAREFULLY ONTO THE BEDDING MATERIAL PREVIOUSLY PLACED. DO NOT PERMIT FREE FALL OF THE MATERIAL DO NOT DROP SHARP, HEAVY PIECES OF MATERIAL DIRECTLY ONTO THE PIPE.

31. ALL OPEN PIPE ENDS SHALL BE COVERED AT THE END OF THE WORK DAY TO PREVENT FOREIGN OBJECTS FROM ENTERING THE PIPE DURING OFF HOURS (ANIMALS, DIRT, FOREIGN DEBRIS, ETC.)

32. THROUGHOUT THE INSTALLATION PROCESS, THE CONTRACTOR SHALL NOT ALLOW NEWLY INSTALLED PIPING TO BE LEFT UNCOVERED OVERNIGHT WITHOUT PRIOR APPROVAL FROM THE OWNER.

33. WHEN REQUIRED AND SUBJECT TO FIELD CONDITIONS, PROCTOR DENSITY TESTS IN ACCORDANCE WITH ASTM D 1557 SHALL BE USED THROUGHOUT THE COURSE OF THE PROJECT TO DETERMINE THE STANDARD DENSITY OF MATERIAL IN LABORATORY, UNLESS OTHERWISE SPECIFIED.

34. WHEN REQUIRED AND SUBJECT TO FIELD CONDITIONS AND INSTALLATION PROCEDURES, COMPACTION TESTS IN ACCORDANCE WITH ASTM D1556 (SAND CONE METHOD) OR BY ASTM D2922 (NUCLEAR METHODS) SHALL BE REQUIRED TO VERIFY THE IN-PLACE DENSITY OF COMPACTED SOIL BACKFILL. THESE TESTS WILL BE PERFORMED AT LOCATIONS AS DETERMINED IN THE FIELD AND AT A MINIMUM FREQUENCY OF ONCE PER DAY EXCEPT FOR TRENCHES IN PUBLIC RIGHT-OF-WAY (ROW), WHERE THE REQUIREMENTS OF THE PERMITTING AGENCY SHALL BE FOLLOWED, IF APPLICABLE.

35. WHERE REQUIRED, COMPACT SOIL TO NOT LESS THAN THE FOLLOWING PERCENTAGES OF MAXIMUM DRY DENSITY AND OPTIMUM MOISTURE CONTENT, UNLESS NOTED OTHERWISE:
   A. TRENCHES - 90 PERCENT RELATIVE COMPACTION UNLESS SHOWN OTHERWISE ON THE DRAWINGS. SAND CEMENT SLURRY REFILL FOR OVER EXCAVATION--90 PERCENT RELATIVE COMPACTION, UNLESS NOTED OTHERWISE.
   B. ROADWAYS - COMPACT THE TOP 12 INCHES OF SUBGRADE AND EACH LAYER OF BACKFILL OR FILL MATERIAL AT 95 PERCENT MAXIMUM DRY DENSITY AT A MOISTURE CONTENT THAT LIES WITHIN 3 PERCENT OF THE OPTIMUM MOISTURE CONTENT EXCEPT FOR ROADWAYS IN PUBLIC ROW, WHERE THE REQUIREMENTS OF THE PERMITTING AGENCY SHALL BE FOLLOWED, IF APPLICABLE.
   C. ALL OTHER AREAS - COMPACT THE TOP 6 INCHES OF SUBGRADE AND EACH LAYER OF BACKFILL OR FILL MATERIAL AT 90 PERCENT MAXIMUM DRY DENSITY AT A MOISTURE CONTENT THAT LIES WITHIN 3 PERCENT OF THE OPTIMUM MOISTURE CONTENT.

38. CEMENT SLURRY BACKFILL, WHERE USED, SHALL BE PLACED IN A UNIFORM MANNER THAT WILL PREVENT VOIDS IN, OR SEGREGATION OF, THE BACKFILL, AND WILL NOT FLOAT OR SHIFT THE CULVERT. FOREIGN MATERIAL WHICH FALLS INTO THE TRENCH PRIOR TO OR DURING PLACING OF THE CEMENT SLURRY BACKFILL SHALL BE IMMEDIATELY REMOVED.

37. BACKFILLING OVER OR PLACING ANY MATERIAL OVER CEMENT SLURRY BACKFILL SHALL NOT COMMENCE UNTIL 4 HOURS AFTER THE CEMENT SLURRY BACKFILL HAS BEEN PLACED, EXCEPT THAT WHEN CONCRETE SAND IS USED FOR THE AGGREGATE AND THE IN PLACE MATERIAL IS FREE DRAINING, BACKFILLING MAY COMMENCE AS SOON AS THE SURFACE WATER IS GONE.

38. BACKFILL SHALL BE TO A DEPTH OF NO LESS THAN 1" LOWER THAN THE BOTTOM OF THE EXISTING PAVEMENT, SUCH THAT THE RESULTING THICKNESS OF ASPHALT WILL BE AT LEAST 1" GREATER WITHIN THE OUTLINE OF THE TRENCH.

39. IN GENERAL, THE FINAL GRADE SHALL SLOPE AWAY FROM THE STRUCTURES AND PAVED OR GRAVEL AREAS AND TOWARD NATURAL DRAINAGE AREAS. CONSTRUCT FINISHED SURFACES TO PLUS OR MINUS 1 INCH OF THE ELEVATIONS INDICATED. WHERE APPLICABLE, FINAL GRADING SHALL ALLOW APPROXIMATELY 6 INCHES OF CURB EXPOSURE AT THE EQUIPMENT PAD AND A MINIMUM EXPOSURE OF 2 INCHES FOR ALL OTHER CONCRETE STRUCTURES.

40. INSTALL TRACER WIRE AND DETECTABLE MYLAR MARKING TAPE ON ALL BURIED NON-METALLIC UTILITIES (ELECTRICAL, MECHANICAL, AND CIVIL) AS SHOWN ON THE DRAWINGS. TRACER WIRE SHALL BE NO. 12 AWG BARE WIRE CONSISTING OF 7 STRANDS AND CLASS B STRANDING AND SHALL E POSITIVELY ATTACHED TO THE CROWN OF ALL UNDERGROUND NON-METALLIC UTILITIES ALONG THE ENTIRE LENGTH OF THE UTILITY UNLESS NOTED OTHERWISE.THE MARKING (WARNING) TAPE SHALL BE 6? WIDE FOIL X 5 MILS THICK DETECTABLE MYLAR WARNING TAPE AS MANUFACTURED BY SETON IDENTIFICATION PRODUCTS, BRANFORD, CT (PRODUCT #85517); OR APPROVED EQUAL. THE TAPE SHALL BE HIGHLY VISIBLE RED AND COLOR CODED IN ACCORDANCE WITH THE AMERICAN PUBLICS WORKS ASSOCIATE STANDARDS. USE ONE LINE MARKER FOR 16 INCH WIDTH OF TRENCH. IN AREAS WHERE PAVEMENT HAS NOT YET BEEN INSTALLED, TAPE SHALL BE INSTALLED 2 INCHES BELOW FINISHED GRADE.

41. NOT USED

SURFACE RESTORATION

42. CONCRETE DRIVEWAY, SIDEWALK, CURB, AND GUTTER REPLACEMENT SHALL BE EQUIVALENT IN ALL RESPECTS TO EXISTING, INCLUDING EXPOSED AGGREGATE AND/OR BRUSHED FINISH, AND REPLACED IN ACCORDANCE WITH LADPW STANDARD PLANS OR SPPWC AS REQUIRED BY THE PERMITTING AGENCY. IF THE IN-KIND REPLACEMENT REQUIREMENTS CONFLICT WITH THE REQUIREMENTS PRESENTED HERE, THE MORE STRINGENT SHALL APPLY. WHERE PIPE TRENCHING IMPACTS SIDEWALK SLABS, THE WHOLE SLAB (JOINT TO JOINT) SHALL BE REPLACED IN "LIKE KIND" IN ALL RESPECTS.

43. WHERE ENCOUNTERED, CONTRACTOR SHALL SAW CUT AND REPLACE PORTLAND CEMENT CONCRETE (PCC) PAVEMENT IN ACCORDANCE WITH SPPWC STD PLAN NO 132-2. EXISTING PCC PAVEMENT SHALL BE REMOVED IN ACCORDANCE WITH SSPWC 300-1.3. ALL PCC SHALL BE 520-C-2500, UNLESS INDICATED OTHERWISE, AND SHALL BE PLACED OVER THE TRENCH WIDTH TO MATCH EXISTING GRADE WITH A TOTAL THICKNESS OF 1 INCH (MIN) OVER EXISTING THICKNESS TO PROVIDE SLOUGH PER SSPWC 306.1.5.2. #5 DOWEL PINS SHALL BE USED IN CONNECTING NEW AND EXISTING CONCRETE PAVEMENT AND AT CONCRETE CONSTRUCTION JOINTS, PER SSPWC STD PLAN 143.2.

44. CONTRACTOR SHALL BASE PAVE OVER TRENCH TO EXISTING GRADE. A ROLLER SHALL BE USED FOR FINAL COMPACTION. ASPHALT SHALL BE PLACED OVER THE TRENCH WIDTH TO MATCH EXISTING GRADE WITH A TOTAL THICKNESS OF 1 INCH (MIN) OVER EXISTING THICKNESS, WITH A MINIMUM THICKNESS OF 4 INCHES.

45. ALL MARK-OUT AND INSTALLATION OF FINAL STRIPING AND PAVEMENT MARKINGS SHALL BE PERFORMED BY THE CONTRACTOR. QUANTITIES FOR PAINTED OR PLASTIC STRIPING REMOVAL OF EXISTING STRIPING AND INSTALLATION OF PERMANENT STRIPING SHALL BE AS NEEDED.
   a. MARK-OUT SHALL BE BY HEAVY PAINT BRUSH MARKINGS OVER A PULLED ROPE IN THE RESPECTIVE WHITE AND YELLOW COLORS OF THE PROPOSED STRIPING (STRIPING GAPS SHALL BE DOTTED). IF THE MARK-OUT IS TO REMAIN OVERNIGHT BEFORE THE FINAL STRIPING, TEMPORARY REFLECTORIZED OVERLAY MARKERS SHALL BE INSTALLED PER LADOT STANDARD DRAWINGS S-453-0.
   b. ALL FINAL STRIPING AND PAVEMENT MARKINGS SHALL BE IN HOT APPLIED ALKYD THERMOPLASTIC IN ACCORDANCE WITH LADOT SPECIFICATION NUMBERS 51-005-04 AND 76-012-09 UNLESS NOTED OTHERWISE.

46. WHERE ENCOUNTERED, CONTRACTOR SHALL REPLACE SOD AND ALL OTHER LANDSCAPING (SHRUBS, BUSHES, PLANTS, ETC) DISTURBED BY THE TRENCHING WITH NEW MATERIALS MATCHING THE SPECIES OF THE OF THE CURRENT CONDITIONS AND INSTALLED TO MATCH PRE-WORK GRADES AND SLOPES. IN AREAS OF LANDSCAPING, SLURRY BACKFILL SHALL CEASE SUFFICIENTLY SHALLOW TO ALLOW COMPLETION OF THIS SCOPE, AND TO MATCH EXISTING TOPSOIL AT THE SITE. AT A MINIMUM, 12" OF TOPSOIL SHALL BE PLACED UNDER AREAS WHERE GRASS MUST BE REPLACED IN KIND - OR - IN AREAS WHERE SMALL SHRUBS OR BUSHES ARE TO BE REPLACED, THE AMOUNT OF TOPSOIL SHALL BE 1.5 TIMES THE DEPTH OF THE PLANT BULB. THE BACKFILL SHALL NOT PREVENT LANDSCAPING / SURFACE RESTORATION IN KIND.

47. PRECAST MANHOLES AND HANDHOLES SHALL BE AS MANUFACTURED BY JENSEN PRECAST; OLSEN PRECAST COMPANY; OLDCASTLE PRECAST, INC. OR EQUAL. MANHOLE AND HANDHOLE FRAMES AND COVER SHALL BE CAST IRON, HEAVY DUTY TYPE FOR CLASS H-20 WHEEL LOADING AS MANUFACTURED BY NEENAH: LEBARON; VULCAN OR EQUAL. COVERS SHALL BE MARKED "ELECTRICAL". SIZES SHALL BE DETERMINED BY THE CONTRACTOR IN THE FIELD BASED ON THE QUANTITY AND SIZE OF CONDUITS ENTERING AND LEAVING THE HANDHOLE WITH THE CAPABILITY TO INCORPORATE SOME SPARE CAPACITY. CONTRACTOR SHALL CONFORM TO THE NEC REQUIREMENT OF PROVIDING A PULL-BOX PRIOR TO REACHING THE MAXIMUN NUMBER OF ALLOWABLE BENDS.

RECORD DRAWING

THIS RECORD DRAWING HAS BEEN PREPARED BASED ON A COMBINATION OF INFORMATION PROVIDED BY OTHERS AND BY CDM Smith. THE ENGINEER HAS NOT VERIFIED THE ACCURACY OF ALL THE INFORMATION TO THE BEST OF THE ENGINEER'S BELIEF AND KNOWLEDGE, THE INCLUDED RECORD INFORMATION IS REASONABLY ACCURATE.

By RAVI SUBRAMANIAN Date JANUARY 2018

CDM Smith

REGISTERED PROFESSIONAL ENGINEER
RAVI SUBRAMANIAN
No. C053679
Exp. 06-30-2019
CIVIL
STATE OF CALIFORNIA

REV. NO.	DATE	DRWN	CHKD	REMARKS
5	1/2018	MP	AFR	RECORD DRAWING (MODIFIED TO DELINIATE OU1)
4	7/2015	PJR	MTG	RECORD DRAWING (MODIFIED FOR FULL SCALE SYSTEM)
3	4/2014	PJR	JTB	REVISED IFC DRAWINGS
2	1/2014	PJR	JTB	ISSUED FOR CONSTRUCTION
1	7/13/12	PJR	IL	REVISED FOR PDR SUBMITTAL

DESIGNED BY: AFR
DRAWN BY: MP
SHEET CHK'D BY: AFR
CROSS CHK'D BY: JTB
APPROVED BY: RS
DATE: JANUARY 2018

CDM Smith
111 Academy Way. Suite 150
Irvine, California, 92617
Tel: (949) 752-5462

OMEGA CHEMICAL SUPERFUND SITE
OU-1 SOIL VAPOR EXTRACTION SYSTEM
12504 / 12512 EAST WHITTIER BOULEVARD
WHITTIER, CALIFORNIA

TRENCH SECTION AND DETAILS

PROJECT NO. 10590-216711
FILE NAME: OU1SVE-C-6.DWG
SHEET NO. C-6

pw:\\docpwsp1.PW_XM1\Documents\10500\97768\04 Design Services NM_30%\01 General\10 CADD\01 Working\2015 RECORD DWGS (GWTS & SVE)\SVE SYSTEM (RECORD DRAWINGS)\FSSVE-C-6.dwg
©2015 CDM SMITH. ALL RIGHTS RESERVED.
REUSE OF DOCUMENTS: THESE DOCUMENTS AND DESIGNS PROVIDED BY PROFESSIONAL SERVICE, INCORPORATED HEREIN, ARE THE PROPERTY OF CDM SMITH AND ARE NOT TO BE USED, IN WHOLE OR PART, FOR ANY OTHER PROJECT WITHOUT THE WRITTEN AUTHORIZATION OF CDM SMITH.

DESIGN CRITERIA:

CODES:
CBC–2013 (CALIFORNIA BUILDING CODE 2013)

ACI 318–11 (BUILDING CODE REQUIREMENTS FOR STRUCTURAL CONCRETE)

DESIGN LOADS:

DEAD LOADS:
INCLUDE WEIGHT OF ALL MATERIALS OF CONSTRUCTION
LIVE LOADS:

PROCESS ROOM FLOORS AND SLABS	200 PSF (NON–REDUCIBLE)
ELECTRICAL ROOM/CONTROL ROOM FLOORS	300 PSF

BUILDING OCCUPANCY CATEGORY II

WIND DESIGN DATA:

BASIC WIND SPEED	V_{ULT}	110 MPH (ULTIMATE)
	V_{ASD}	85 MPH (NOMINAL)
EXPOSURE CATEGORY		C

SEISMIC DESIGN DATA:

SOIL SITE CLASS	D
MAPPED SPECTRAL RESPONSE ACCELERATIONS	
SHORT PERIOD	Ss = 2.241
ONE SECOND PERIOD	S1 = 0.801
SPECTRAL RESPONSE COEFFICIENTS	
SHORT PERIOD	Sds = 1.494
ONE SECOND PERIOD	Sd1 = 0.801
SEISMIC DESIGN CATEGORY	E
SEISMIC IMPORTANCE FACTOR	Ie = 1.0

SNOW:

GROUND SNOW LOAD Pg	0 PSF

SEISMIC REQUIREMENTS – NON–STRUCTURAL COMPONENTS:

IN ACCORDANCE WITH THE REQUIREMENTS OF THE CBC AND BY REFERENCE ASCE 7–10, ALL MECHANICAL, ELECTRICAL AND NON–STRUCTURAL COMPONENTS AND EQUIPMENT ANCHORAGES SHALL BE DESIGNED IN ACCORDANCE WITH THE REQUIREMENTS OF SECTION 13 OF ASCE 7 WITH A COMPONENT IMPORTANCE FACTOR Ip=1.0

FOR THIS PURPOSE, ALL COMPONENTS AND EQUIPMENT SHALL BE CONSIDERED TO HAVE THE SAME SEISMIC DESIGN CATEGORY AS THAT OF THE STRUCTURE THEY OCCUPY.

FOUNDATIONS:

FOR GEOTECHNICAL INFORMATION REFER TO "INVESTIGATION REPORT OMEGA CHEMICAL SUPERFUND SITE" DATED DECEMBER 2, 2011 BY CDM INC. PROJECT NO. 10500–81846.

ALLOWABLE BEARING PRESSURE = 1000 PSF

ALL EXTERIOR FOUNDATIONS SHALL EXTEND TO DEPTH = 12".

LATERAL SOIL PRESSURES:

ABOVE WATER TABLE:
PASSIVE = 275 PCF

GENERAL CONDITIONS:

ALL STRUCTURAL DRAWINGS SHALL BE USED IN CONJUNCTION WITH THE OTHER PROJECT DRAWINGS AND SPECIFICATIONS.

SEE MECHANICAL, ELECTRICAL, ARCHITECTURAL AND BUILDING SERVICES DRAWINGS FOR ANCHORS, PIPE SLEEVES, CONDUITS OR OTHER ITEMS TO BE EMBEDDED IN OR PASS THROUGH THE CONCRETE. IN GENERAL, EMBEDMENTS AND PENETRATIONS LESS THAN 12 INCHES IN DIAMETER ARE NOT SHOWN ON STRUCTURAL DRAWINGS.

STANDARD DETAILS SHALL BE USED AT ALL APPLICABLE LOCATIONS, UNLESS NOTED OTHERWISE ON DRAWINGS.

SEE CIVIL SITE PLANS FOR STRUCTURE LOCATION COORDINATES.

FIELD VERIFY ALL EXISTING DIMENSIONS PRIOR TO CONSTRUCTION.

WRITTEN DIMENSIONS SHALL TAKE PRECEDENCE OVER SCALED SIZES.

CONSTRUCTION NOTES:

PRIOR TO INSTALLATION OF EQUIPMENT COORDINATE AND CONFIRM THE ANCHORAGE REQUIREMENTS WITH THE MANUFACTURER. THE ANCHORAGE SYSTEM SHALL NOT DAMAGE THE CONCRETE.

CONTRACTOR SHALL VERIFY ALL DIMENSIONS IN THE FIELD. THE PROJECT MANAGER SHALL BE NOTIFIED OF ANY DISCREPANCY BETWEEN DRAWINGS IMMEDIATELY UPON DISCOVERY.

THE STRUCTURE IS DESIGNED AS A STABLE UNIT AFTER ALL COMPONENTS ARE IN PLACE. TEMPORARILY BRACE THE STRUCTURE FOR STABILITY UNTIL ALL PERMANENT BRACING SYSTEMS ARE COMPLETE. THE CONTRACTOR SHALL PROVIDE ALL SHORING AND BRACING NECESSARY TO ENSURE THE STABILITY OF ANY AND ALL PARTS OF THE BUILDING DURING CONSTRUCTION. THE CONTRACTOR SHALL RETAIN AT THE CONTRACTOR'S EXPENSE A PROFESSIONAL ENGINEER AS REQUIRED TO DETERMINE THE ADEQUACY OF ALL SHORING AND BRACING DURING CONSTRUCTION.

CONSTRUCTION NOTES CONTINUED:

POSITIVE SURFACE DRAINAGE AWAY FROM BOTH EXISTING STRUCTURES AND NEW FOUNDATION EXCAVATIONS SHALL BE PROVIDED DURING CONSTRUCTION.

CONTRACTOR SHALL BE RESPONSIBLE FOR DEWATERING.

STRUCTURES ARE DESIGNED TO BE NON–BUOYANT AFTER ALL COMPONENTS OF THE STRUCTURE ARE CONSTRUCTED AND BACKFILL IS IN PLACE. THE STRUCTURE MAY BE BUOYANT DURING CONSTRUCTION. CONTRACTOR SHALL PROTECT ALL STRUCTURES (NEW AND EXISTING) FROM FLOTATION DURING CONSTRUCTION REGARDLESS OF GROUNDWATER LEVELS.

CAST–IN–PLACE CONCRETE:

REINFORCED CONCRETE SHALL CONFORM TO ACI 318.

REINFORCED CONCRETE FOR WATER RETAINING STRUCTURES SHALL CONFORM TO ACI 350.

REINFORCING STEEL FABRICATION SHALL BE IN ACCORDANCE WITH THE LATEST EDITION OF THE CRSI MANUAL OF STANDARD PRACTICE.

ALL EXPOSED CORNERS OF CONCRETE SHALL HAVE 3/4" CHAMFER, UNLESS OTHERWISE NOTED.

WALL REINFORCEMENT AT CORNERS OR JUNCTIONS OF WALLS SHALL BE CONTINUOUS, LAPPED, OR TERMINATED IN AN ACI STANDARD 90 DEGREE STANDARD HOOK DETAIL. LAP SPLICES SHALL CONFORM WITH THE TABLE ON THE STANDARD DETAIL SHEETS.

UNLESS OTHERWISE INDICATED ON THE DRAWINGS, BARS SHALL BE DOWELED. DOWELS SHALL BE THE SAME SIZE AND SPACING AS THE REINFORCEMENT WHICH IS SPLICED UNLESS OTHERWISE NOTED.

SLABS, BEAMS, AND COLUMN REINFORCING BARS SHALL HAVE A MINIMUM EXTENSION OR ANCHORAGE INTO SUPPORTS IN ACCORDANCE WITH ACI 318.

STIRRUP SUPPORT BARS SHALL BE PROVIDED AS REQUIRED TO SECURE TOP BARS AGAINST DISPLACEMENT.

UNLESS OTHERWISE INDICATED ON THE DRAWINGS, CONCRETE COVER OVER #11 AND SMALLER REINF BARS SHALL BE AS FOLLOWS:

SLABS AND JOISTS:
FORMED CONCRETE SURFACES AND UNFORMED TOP SURFACES FOR DRY CONDITIONS.....2"
FORMED CONCRETE SURFACES AND UNFORMED TOP SURFACES EXPOSED TO WEATHER, IN CONTACT WITH SOIL OR FLUIDS, OR LOCATED OVER FLUIDS.....2"
BEAMS AND COLUMNS:
FORMED CONCRETE SURFACES FOR DRY CONDITIONS:
STIRRUPS, SPIRALS AND TIES.....2"
PRINCIPAL REINFORCEMENT.....2 1/2"
FORMED CONCRETE SURFACES EXPOSED TO WEATHER, IN CONTACT WITH SOIL OR FLUIDS, OR BEAMS LOCATED OVER FLUIDS:
STIRRUPS AND TIES.....2"
PRINCIPAL REINFORCEMENT.....2 1/2"
WALLS:
FORMED CONCRETE SURFACES FOR DRY CONDITIONS.....2"
FORMED CONCRETE SURFACES EXPOSED TO WEATHER OR IN CONTACT WITH SOIL OR FLUIDS.....2"
FOOTINGS AND SLABS ON GRADE:
FORMED CONCRETE SURFACES.....2"
AT UNFORMED CONCRETE SURFACES CAST AGAINST THE SOIL OR CONCRETE WORK MATS.....3"

CONCRETE COVER IS THE LEAST DISTANCE BETWEEN EMBEDDED REINFORCEMENT AND THE SURFACE OF THE CONCRETE. THE SURFACE OF THE CONCRETE IS THE BOTTOM OF RUSTICATION OR REVEAL STRIPS WHEN USED.

CONCRETE CURING SHALL BE IN ACCORDANCE WITH THE CONTRACT DOCUMENTS.

NO BACKFILL SHALL BE PLACED AGAINST WALLS UNTIL CONCRETE HAS REACHED THE SPECIFIED STRENGTH AND ALL CONNECTING SLABS AND BEAMS PROVIDING SUPPORT TO THE WALLS HAVE BEEN CAST AND HAVE REACHED THE SPECIFIED STRENGTH. BACKFILL MATERIALS AND TECHNIQUE SHALL FOLLOW THE GEOTECHNICAL REPORT RECOMMENDATIONS.

CONCRETE JOINTS:

CONSTRUCTION JOINTS SHALL NOT BE PLACED AT LOCATIONS OTHER THAN THOSE SHOWN ON THE DRAWINGS WITHOUT THE PRIOR WRITTEN APPROVAL OF THE ENGINEER.

CONSTRUCTION JOINTS AND SURFACES SHALL BE PREPARED IN ACCORDANCE WITH SPECIFICATIONS.

CONCRETE ANCHORS:

CONTRACTOR SHALL LOCATE EXISTING REINFORCING USING NON–DESTRUCTIVE METHODS PRIOR TO DRILLING HOLES FOR ADHESIVE AND EXPANSION ANCHORS. ADJUST SPACING OF ANCHORS TO MISS REINFORCING, HOWEVER, TOTAL NUMBER OF ANCHORS PROVIDED MUST EQUAL NUMBER SHOWN ON DRAWINGS.

ADHESIVE FOR EMBEDDED DOWELS AND ANCHORS SHALL BE HILTI HIT–HY 200 (ICC EVALUATION REPORT 3187), OR APPROVED EQUAL. ALL DRILLED HOLES SHALL BE SIZED ACCORDING TO MANUFACTURER'S RECOMMENDATIONS.

EXPANSION ANCHORS SHALL BE HILTI KWIK BOLT TZ, (ICC EVALUATION REPORT 1917). OR APPROVED EQUAL.

TYPICAL STRUCTURAL MATERIALS:

SEE PROJECT SPECIFICATIONS AND NOTES ON DRAWINGS FOR INDIVIDUAL STRUCTURES FOR DETAILED OR SPECIAL REQUIREMENTS.

CONCRETE
FILL, DUCT ENCASEMENT, WHERE NOTED: W/C ≤ 0.62 CLASS A (f'c = 2500 PSI)
MISCELLANEOUS CIVIL STRUCTURES: W/C ≤ 0.54 CLASS B (f'c = 3000 PSI)
STRUCTURAL CONCRETE; CLASS C (f'c = 4000 PSI)
REINFORCING STEEL: ASTM A615, W/C ≤ 0.45 GRADE 60 (Fy = 60,000 PSI)
CEMENT: ASTM C150, TYPE II

SPECIAL INSPECTION REQUIREMENTS:

SPECIAL INSPECTIONS SHALL BE CONDUCTED IN ACCORDANCE WITH THE REQUIREMENTS SET FORTH IN CHAPTER 17 OF CALIFORNIA BUILDING CODE.

THE CONTRACTOR SHALL NOTIFY THE INSPECTOR 24 HOURS IN ADVANCE OF ALL INSPECTIONS.

THE FOLLOWING ITEMS, AS A MINIMUM, SHALL RECEIVE SPECIAL INSPECTION:
SOILS (1705.6)
CONCRETE CONSTRUCTION (1705.3)

STRUCTURAL LEGEND AND SYMBOLS

(E) INDICATES EQUIPMENT PAD PER DETAILS ON SHEET S–3. COORDINATE SIZE WITH EQUIPMENT MANUFACTURER REQUIREMENTS.

GRATING SPAN DIRECTION

EARTH FILL
GRANULAR FILL
GRATING
UNDISTURBED EARTH
MASONRY
CHECKERD PLATE
CONCRETE
STEEL
GROUT
ALUMINUM

ABBREVIATION NOTES:

ABBREVIATIONS AND DESIGNATIONS FOR STEEL MEMBERS MAY BE FOUND IN THE CURRENT STEEL CONSTRUCTION MANUAL BY AISC.

ABBREVIATIONS OF TECHNICAL SOCIETIES AND TRADE ASSOCIATIONS MAY BE FOUND IN THE SPECIFICATIONS.

WELDING SYMBOLS AND ABBREVIATIONS MAY BE FOUND IN AWS 2.4.

ABBREVIATIONS:

&	AND
@	AT
ø	DIAMETER
#	NUMBER
AB	ANCHOR BOLT
ABV	ABOVE
ADDL	ADDITIONAL
AGG	AGGREGATE
AL	ALUMINUM
ALT	ALTERNATE (ING)
APPROX	APPROXIMATE (LY)
ARCH	ARCHITECT (URAL) (URE)
B TO B	BACK TO BACK
BEV	BEVEL (ED)
BLK	BLOCK
BLKG	BLOCKING
BOT	BOTTOM
BRG	BEARING
C TO C	CENTER TO CENTER
CIRC	CIRCUMFERENTIAL
CJ	CONSTRUCTION JOINT
℄ OR CL	CENTERLINE
CLJ	CONTROL JOINT
CLR	CLEAR
CMU	CONCRETE MASONRY UNITS
COL	COLUMN
COMP	COMPRESSIBLE
CONC	CONCRETE
CONN	CONNECTION
CONT	CONTINUOUS
CPLG	COUPLING
CRS	COURSE (S)
CSK	COUNTERSINK
CTG	COATING
CTR	CENTER (ED)
d	PENNEY
DET	DETAIL
DIA	DIAMETER
DIAG	DIAGONAL
DIR	DIRECTION
DL	DEAD LOAD
DO	DITTO
DWG	DRAWING
DWL	DOWEL
EA	EACH
EB	EXPANSION BOLT
EF	EACH FACE
EL	ELEVATION
ELEC	ELECTRIC (AL)
EMBED	EMBEDMENT
EQ	EQUAL (LY)
EQPT	EQUIPMENT
ES	EACH SIDE
EW	EACH WAY
EXP JT	EXPANSION JOINT
EXST	EXISTING
EXT	EXTERIOR
f'c	CONCRETE COMPRESSION STRESS
f'm	MASONRY PRISM STRESS
FAB	FABRICATE (OR) (ED)
FD	FLOOR DRAIN
FDN	FOUNDATION
FF	FAR FACE
FHMS	FLATHEAD MACHINE SCREW
FHWS	FLATHEAD WOOD SCREW
FIN	FINISH (ED)
FL	FLOOR
FLG	FLANGE (ED)
FRP	FIBERGLASS REINFORCED PLASTIC
FT	FEET/FOOT
FTG	FOOTING/FITTING
GA	GAGE
GALV	GALVANIZED
GI	GALVANIZED IRON
GLB	GLASS BLOCK
GR	GRADE
GRTG	GRATING
HAS	HEADED ANCHOR STUD
HD	HEAVY DUTY
HDR	HEADER
HOR	HORIZONTAL
HP	HIGH POINT
HR	HANDRAIL
HVAC	HEATING, VENTILATING AND AIR CONDITIONING
IAW	IN ACCORDANCE WITH
ID	INSIDE DIAMETER
IF	INSIDE FACE
IN	INCH
INT	INTERIOR
INVT	INVERT
JT	JOINT
KO	KNOCKOUT
L	ANGLE DESIGNATION OR LENGTH
LLH	LONG LEG HORIZONTAL
LLV	LONG LEG VERTICAL
LNTL	LINTEL
LOC	LOCATION/LOCATED
LONG	LONGITUDINAL
LP	LOW POINT
LT	LEFT
LW	LIGHTWEIGHT
MAS	MASONRY
MATL	MATERIAL
MAX	MAXIMUM
MB	MACHINE BOLTS
MCJ	MASONRY CONTROL JOINT
MECH	MECHANICAL
MFD	MANUFACTURED
MFG	MANUFACTURING
MFR	MANUFACTURER
MIN	MINIMUM
MISC	MISCELLANEOUS
MO	MASONRY OPENING
NF	NEAR FACE
NSG	NON–SHRINK GROUT
NTS	NOT TO SCALE
OC	ON CENTER
OD	OUTSIDE DIAMETER
OF	OUTSIDE FACE
OPNG	OPENING
OPP	OPPOSITE
OPP HD	OPPOSITE HAND
OPT	OPTIONAL
PCF	POUNDS PER CUBIC FOOT
PCJ	PARTIAL CONTRACTION JOINT
PJF	PREMOLDED JOINT FILLER
℗ OR PL	PLATE
PLYWD	PLYWOOD
PRCST	PRECAST
PREFAB	PRE–FABRICATED
PSF	POUNDS PER SQUARE FOOT
PSI	POUNDS PER SQUARE INCH
PVMT	PAVEMENT
R	RISER (S)
RAD	RADIUS
RC	REINFORCED CONCRETE
REF	REFERENCE/REFER
REINF	REINFORCE (D) (ING) (MENT)
REQD	REQUIRED
REV	REVISION
RLG	RAILING
RO	ROUGH OPENING
RT	RIGHT
SCHED	SCHEDULE
SCJ	SLAB CONTROL JOINT
SECT	SECTION
SFR	SYNTHETIC FIBER REINFORCED
SIM	SIMILAR
SP	SPACE (S) (D)
SPEC	SPECIFICATION/SPECIFIED
SQ	SQUARE
SST	STAINLESS STEEL
STD	STANDARD
STIF	STIFFENER
STIR	STIRRUP (S)
SYM	SYMMETRICAL
T	TREAD (S)
T&B	TOP AND BOTTOM
TF	TOP FACE
THD	THREADED
THK	THICK (NESS)
TOC	TOP OF CONCRETE
TOS	TOP OF STEEL
TOW	TOP OF WALL
TRNSV	TRANSVERSE
TSL	TOP OF SLAB
TYP	TYPICAL
UNO	UNLESS NOTED OTHERWISE
VB	VAPOR BARRIER
VERT	VERTICAL
W	WIDE FLANGE
W/	WITH
W/C	WATER–CEMENT RATIO
W/O	WITHOUT
WP	WORKING POINT
WS	WATERSTOP
WWF	WELDED WIRE FABRIC

RECORD DRAWING

THIS RECORD DRAWING HAS BEEN PREPARED BASED ON A COMBINATION OF INFORMATION PROVIDED BY OTHERS AND BY CDM Smith. THE ENGINEER HAS NOT VERIFIED THE ACCURACY OF ALL THE INFORMATION. TO THE BEST OF THE ENGINEER'S BELIEF AND KNOWLEDGE, THE INCLUDED RECORD INFORMATION IS REASONABLY ACCURATE.

By ALAN HAHN Date JANUARY 2018

CDM Smith

REGISTERED PROFESSIONAL ENGINEER
ALAN HARRY HAHN
C 82421
CIVIL
STATE OF CALIFORNIA

REV. NO.	DATE	DRWN	CHKD	REMARKS
2	1/2018	MP	AH	RECORD DRAWING (MODIFIED TO DELINIATE OU1)
1	7–2015	PJR	MTG	RECORD DRAWING (MODIFIED FOR FULL–SCALE SYSTEM)

DESIGNED BY: A. HAHN
DRAWN BY: M. PEREZ
SHEET CHK'D BY: A. HAHN
CROSS CHK'D BY: J. BAMER
APPROVED BY: A. HAHN
DATE: JANUARY 2018

CDM Smith
111 Academy Way, Suite 150
Irvine, California, 92617
Tel: (949) 752-5452

OMEGA CHEMICAL SUPERFUND SITE
OU-1 SOIL VAPOR EXTRACTION SYSTEM
12504 / 12512 EAST WHITTIER BOULEVARD
WHITTIER, CALIFORNIA

STRUCTURAL GENERAL NOTES

PROJECT NO. 10500–216711
FILE NAME: OU1SVE–S–1.DWG
SHEET NO.
S-1

© 2015 CDM SMITH. ALL RIGHTS RESERVED.
REUSE OF DOCUMENTS: THESE DOCUMENTS AND DESIGNS PROVIDED BY PROFESSIONAL SERVICE, INCORPORATED HEREIN, ARE THE PROPERTY OF CDM SMITH AND ARE NOT TO BE USED, IN WHOLE OR PART, FOR ANY OTHER PROJECT WITHOUT THE WRITTEN AUTHORIZATION OF CDM SMITH.

		WALLS AND SLABS				BEAMS AND COLUMNS			
		DEVELOPMENT LENGTH (L_d)(INCHES)		CLASS B LAP SPLICE (INCHES)		DEVELOPMENT LENGTH (L_d)(INCHES)		CLASS B LAP SPLICE (INCHES)	
BAR SIZE	DIAMETER (db) (INCHES)	"TOP" BARS	OTHER	"TOP" BARS	OTHER	"TOP" BARS	OTHER	"TOP" BARS	OTHER
		REINFORCING BARS IN TENSION							
#3	0.375	12	12	16	16	19	15	24	19
#4	0.5	15	12	20	16	25	19	32	25
#5	0.625	19	15	24	19	31	24	40	31
#6	0.75	22	17	29	22	37	29	48	37
#7	0.875	33	25	42	33	54	42	70	54
#8	1.0	37	29	48	37	62	48	80	62
#9	1.125	46	36	60	46	70	54	91	70
#10	1.25	57	44	74	57	79	61	102	79
#11	1.375	68	53	89	68	87	67	113	87

NOTES:
1 "TOP" BARS IS HORIZONTAL REINFORCEMENT PLACED SO THAT MORE THAN 12" OF FRESH CONCRETE IS CAST IN THE MEMBER BELOW THE DEVELOPMENT LENGTH OR SPLICE.

2 CLEAR SPACING OF BARS BEING DEVELOPED OR SPLICED SHALL NOT BE LESS THAN d_b OR 1", WHICHEVER IS GREATER.

3 FOR SPECIAL SPLICE REQUIREMENTS FOR COLUMNS AND END BEARING SPLICES IN COMPRESSION SEE ACI 318 CHAPTER 12.

4 TABLE IS BASED ON f'c = 4000 PSI AND fy = 60,000 PSI. LAP SPLICE AND DEVELOPMENT LENGTHS SHALL BE INCREASED FOR LOWER CONCRETE COMPRESSIVE STRENGTH AS FOLLOWS:

	MULTIPLIER		MULTIPLIER
f'c 2500 PSI	1.27	f'c 3500 PSI	1.07
f'c 3000 PSI	1.16	f'c 4500 PSI	0.94

STANDARD HOOK AND LAP SPLICE IN CONCRETE

DETAIL A
NOT TO SCALE

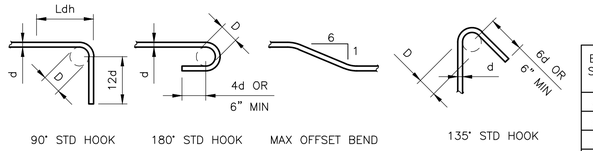

90° STD HOOK | 180° STD HOOK | MAX OFFSET BEND | 135° STD HOOK

D=6d FOR #3 TO #8
D=8d FOR #9 TO #11
D=12d FOR #14 AND #18

PRINCIPAL REINFORCING

MIN D=1 1/2" FOR #3
MIN D=2" FOR #4
MIN D=2 1/2" FOR #5

STIRRUPS AND TIES

BAR SIZE	DIAMETER (db) (INCHES)	90° STD HOOK (L_{dh}) (INCHES)
#3	0.375	6
#4	0.5	7
#5	0.625	9
#6	0.75	10
#7	0.875	12
#8	1.0	14
#9	1.125	15
#10	1.25	17
#11	1.375	19

NOTES:
1 ALL BENDS SHALL BE MADE COLD.
2 #14 AND #18 BARS SHALL BE BEND TESTED AND LAB APPROVED PRIOR TO BENDING.

BAR BENDS

DETAIL B
NTS

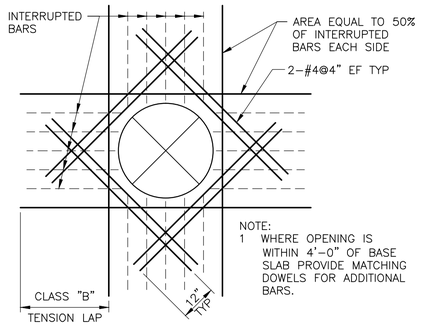

NOTE:
1 WHERE OPENING IS WITHIN 4'–0" OF BASE SLAB PROVIDE MATCHING DOWELS FOR ADDITIONAL BARS.

REINFORCEMENT AT CIRCULAR OPENINGS GREATER THAN 12"

DETAIL C
NTS

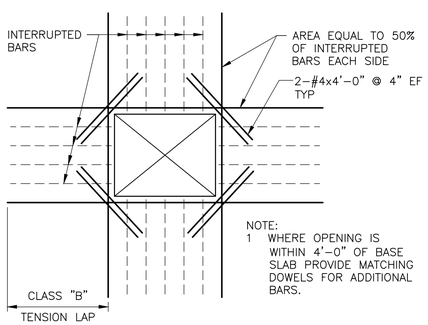

NOTE:
1 WHERE OPENING IS WITHIN 4'–0" OF BASE SLAB PROVIDE MATCHING DOWELS FOR ADDITIONAL BARS.

REINFORCEMENT AT RECTANGULAR OPENINGS GREATER THAN 12"

DETAIL D
NTS

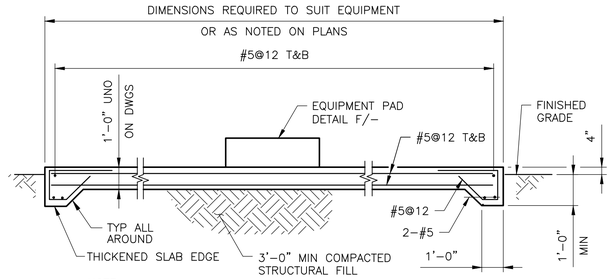

NOTE:
1 PADS FOR PUBLIC UTILITY EQUIPMENT SHALL BE CONSTRUCTED IN ACCORDANCE WITH THE APPROPRIATE AGENCY REQUIREMENTS.
2 FINAL LOCATION OF EQUIPMENT SLAB TO BE FIELD LOCATED IN CONSULTATION WITH ENGINEER.

EXTERIOR EQUIPMENT SLAB

DETAIL E
NTS

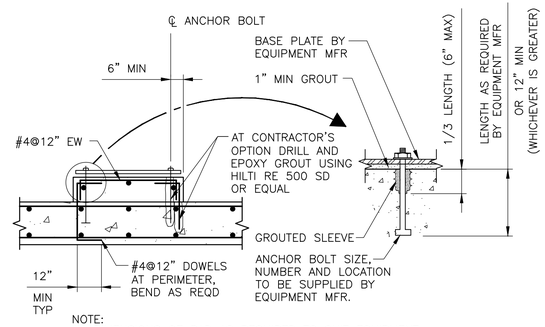

NOTE:
1 DIMENSIONS OF PAD AS REQUIRED TO SUIT EQUIPMENT (4" MIN UNLESS PAD IS CAST INTEGRALLY WITH SLAB).

EQUIPMENT PAD

DETAIL F
NTS

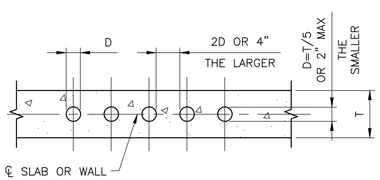

NOTE:
1. WHERE CLEAR DISTANCE BETWEEN SLEEVES IS IMPOSSIBLE THIS AREA SHALL BE TREATED AS A SLAB OPENING OR AS A WALL OPENING.

PIPING AND CONDUIT IN OR THROUGH SLAB OR WALL

DETAIL G
NTS

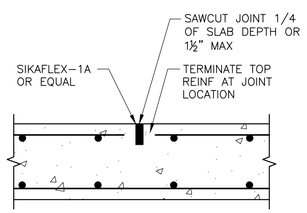

DOUBLE MAT REINF SAWCUT JOINT

DETAIL H
NTS

RECORD DRAWING

THIS RECORD DRAWING HAS BEEN PREPARED BASED ON A COMBINATION OF INFORMATION PROVIDED BY OTHERS AND BY CDM Smith. THE ENGINEER HAS NOT VERIFIED THE ACCURACY OF ALL THE INFORMATION. TO THE BEST OF THE ENGINEER'S BELIEF AND KNOWLEDGE, THE INCLUDED RECORD INFORMATION IS REASONABLY ACCURATE.

By ALAN HAHN Date JANUARY 2018

CDM Smith

REGISTERED PROFESSIONAL ENGINEER ALAN HARRY HAHN C 82421 CIVIL STATE OF CALIFORNIA

REV. NO.	DATE	DRWN	CHKD	REMARKS
2	1/2018	MP	AH	RECORD DRAWING (MODIFIED TO DELINIATE OU1)
1	7–2015	PJR	MTG	RECORD DRAWING (MODIFIED FOR FULL–SCALE SYSTEM)

DESIGNED BY: A. HAHN
DRAWN BY: M. PEREZ
SHEET CHK'D BY: A. HAHN
CROSS CHK'D BY: J. BAMER
APPROVED BY: A. HAHN
DATE: JANUARY 2018

CDM Smith
111 Academy Way. Suite 150
Irvine, California, 92617
Tel: (949) 752-5452

OMEGA CHEMICAL SUPERFUND SITE
OU-1 SOIL VAPOR EXTRACTION SYSTEM
12504 / 12512 EAST WHITTIER BOULEVARD
WHITTIER, CALIFORNIA

STRUCTURAL STANDARD DETAILS

PROJECT NO. 10500–216711
FILE NAME: OU1SVE–S–2.DWG
SHEET NO.
S-2

pw:\\docspwapp1:PW_XM1\Documents\10500\97768\04 Design Services NM_30%\01 General\10 CADD\01 Working\2015 RECORD DWGS (GWTS & SVE)\SVE SYSTEM (RECORD DRAWINGS)\FSSVE-S-3 (RECORD DRAWING).dwg
©2015 CDM SMITH. ALL RIGHTS RESERVED.
REUSE OF DOCUMENTS: THESE DOCUMENTS AND DESIGNS PROVIDED BY PROFESSIONAL SERVICE, INCORPORATED HEREIN, ARE THE PROPERTY OF CDM SMITH AND ARE NOT TO BE USED, IN WHOLE OR PART, FOR ANY OTHER PROJECT WITHOUT THE WRITTEN AUTHORIZATION OF CDM SMITH.

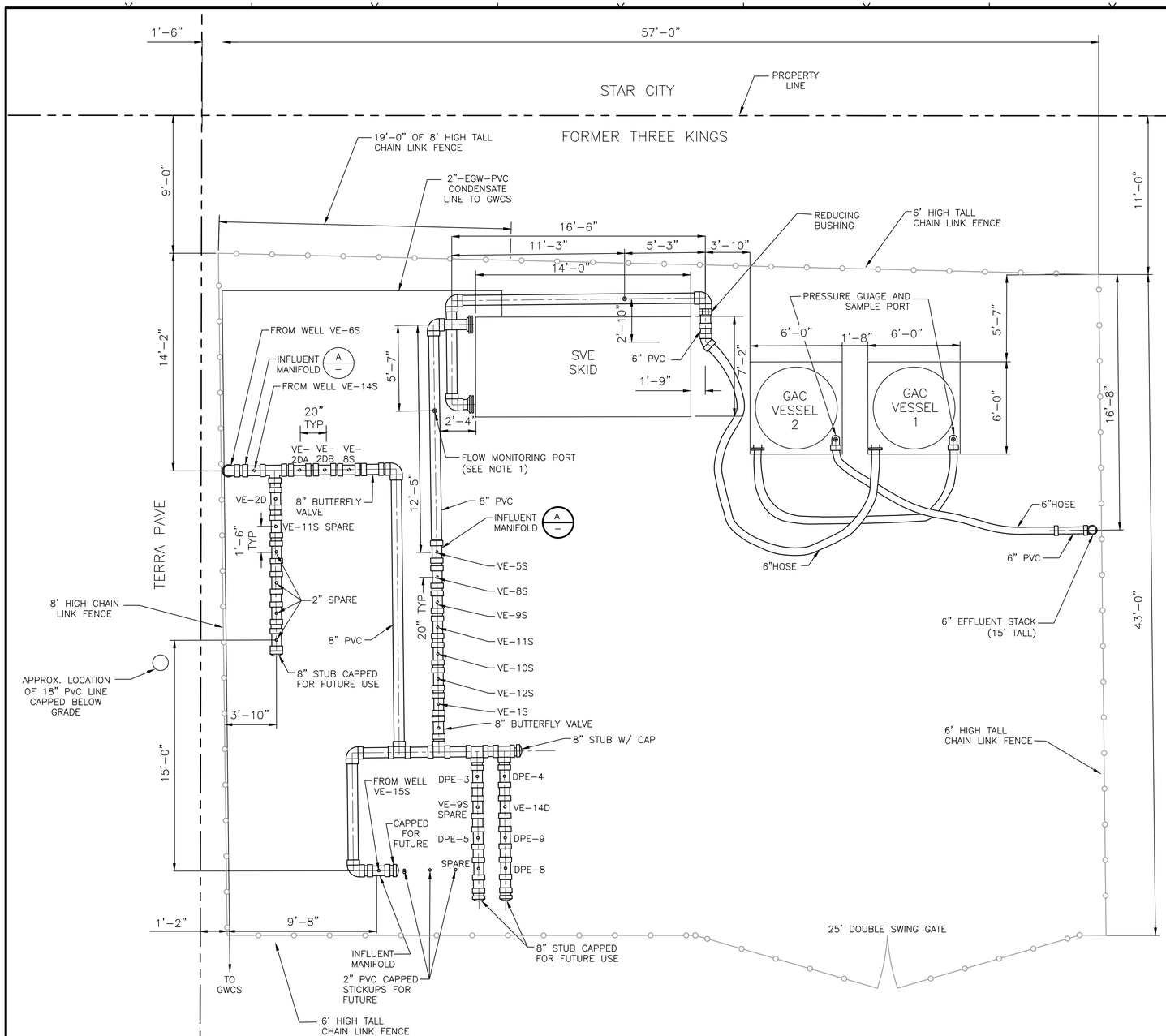

MECHANICAL LAYOUT PLAN
NTS

LEGEND:

ABOVEGROUND PROCESS PIPING

NOTES:

1. ALL PORTS FOR FLOW MONITORING SHALL BE LOCATED ALONG A STRAIGHT SECTION OF PIPE WITH NO FITTINGS, BENDS, OR OTHER CHANGES WITHIN 10 PIPE DIAMETERS UPSTREAM PF THE PORT, AND WITHIN 5 PIPE DIAMETERS DOWNSTREAM OF THE PORT.
2. ALL ABOVE GROUND PVC PIPING SHALL BE SCH 80 AND PAINTED FOR UV PROTECTION.
3. EFFLUENT STACK SHALL BE SUPPORTED.
4. ALL NEW INFLUENT MANIFOLD COMPONENTS (FLOW MEASUREMENT PORT, TEE WITH VACUUM GAUGE, AND BALL VALVE) SHALL BE INSTALLED ON VERTICAL PIPING UNDRNEATH MANIFOLD HEADER.
5. FUTURE LINES SHALL BE STUBBED AND CAPPED.
6. PROPERLY SECURE ALL EQUIPMENT TO THE EXISTING SURFACE.
7. CONTRACTOR SHALL FIELD ROUTE NEW SVE CONVEYANCE AROUND EXISTING PIPING AND OTHER INFRASTRUCTURE TO ACHIEVE CONNECTIONS SHOWN HERE AND ON P&ID. SPARE LINES SHALL BE CONNECTED TO THE MANIFOLD BUT VALVED CLOSED.
8. NOT USED.
9. ALL ABOVE GROUND PIPING SHALL BE SUPPORTED BY THE GROUND SURFACE AND/OR ATTACHED TO UNISTRUT (OR EQUIVALENT) SUPPORTS. SPACING BETWEEN PIPE SUPPORTS SHALL BE IN ACCORDANCE WITH MANUFACTURER'S RECOMMENDATIONS.

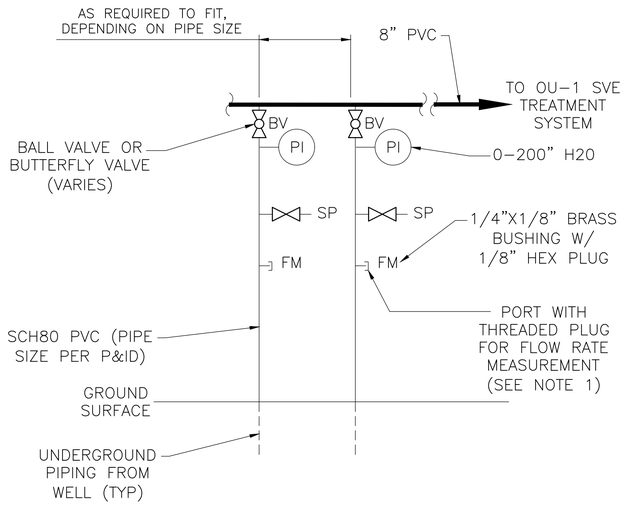

TYPICAL MANIFOLD PIPING SCHEMATIC

DETAIL A
NTS

LEGEND:

BV – BALL VALVE
PI – PRESSURE INDICATOR (VACUUM OR PRESSURE)
SP – SAMPLE PORT
FM – FLOW MONITORING PORT

CALL BEFORE YOU DIG:
UNDERGROUND SERVICE ALERT OF SOUTHERN CALIFORNIA
TWO WORKING DAYS BEFORE YOU DIG
1–800–227–2600

RECORD DRAWING

THIS RECORD DRAWING HAS BEEN PREPARED BASED ON A COMBINATION OF INFORMATION PROVIDED BY OTHERS AND BY CDM Smith. THE ENGINEER HAS NOT VERIFIED THE ACCURACY OF ALL THE INFORMATION. TO THE BEST OF THE ENGINEER'S BELIEF AND KNOWLEDGE, THE INCLUDED RECORD INFORMATION IS REASONABLY ACCURATE.

By RAVI SUBRAMANIAN Date MARCH 2018

CDM Smith

REGISTERED PROFESSIONAL ENGINEER — RAVI SUBRAMANIAN — No. C053679 Exp. 06–30–2019 — CIVIL — STATE OF CALIFORNIA

REV. NO.	DATE	DRWN	CHKD	REMARKS
10	3/2018	MP	AFR	RECORD DRAWING (MODIFIED TO DELINIATE OU1)
9	8/2015	PJR	MTG	RECORD DRAWING (MODIFIED FOR FULL–SCALE SYSTEM)
8	4/2014	PJR	JTB	REVISED IFC DRAWING
7	1/2014	PJR	JTB	ISSUED FOR CONSTRUCTION
6	7/12/13	PJR	NLS	REVISED FOR PDR SUBMITTAL
5	10/24/12	PJR	JTB	PDR SUBMITTAL
4	5/11	JBP	JLD	REVISED AS–BUILT – UPDATED FOR ISVE EXPANSION
3	11/10	MAR	VTB	FOR RECORD DRAWING
2	6/10	PJR		FOR RECORD DRAWING

DESIGNED BY: AFR
DRAWN BY: MP
SHEET CHK'D BY: AFR
CROSS CHK'D BY: JTB
APPROVED BY: RS
DATE: MARCH 2018

CDM Smith
111 Academy Way. Suite 150
Irvine, California, 92617
Tel: (949) 752-5452

OMEGA CHEMICAL SUPERFUND SITE
OU-1 SOIL VAPOR EXTRACTION SYSTEM
12504 / 12512 EAST WHITTIER BOULEVARD
WHITTIER, CALIFORNIA

OU-1 SVE SYSTEM
MECHANICAL PLAN

PROJECT NO. 10500–216711
FILE NAME: OU1SVE–M–1.DWG
SHEET NO.
M-1

XREFs: [IFC-CDMS_2234, IFC-CA-Ravi-S-2015, RECORD DRAWING-ALT-C (AUGUST 2015), CA-PE-Ravi-S-2019, RECORD DRAWING-ALT-C (JULY 2018)] Images: [Subramanian]
Last saved by: MALPASSSK Time: 6/25/2018 1:53:50 PM
pw:\\pw.cdmsmith.com:PW_XM1\10500\97768\04 Design Services NM_30%\01 General\10 CADD\01 Working\2015 RECORD DWGS (GWTS & SVE)\ISVE SYSTEM (RECORD DRAWINGS)\OU1SVE-M-1.dwg
© 2015 CDM SMITH ALL RIGHTS RESERVED
REUSE OF DOCUMENTS: THESE DOCUMENTS AND DESIGNS PROVIDED BY PROFESSIONAL SERVICE, INCORPORATED HEREIN, ARE THE PROPERTY OF CDM SMITH AND ARE NOT TO BE USED, IN WHOLE OR PART, FOR ANY OTHER PROJECT WITHOUT THE WRITTEN AUTHORIZATION OF CDM SMITH.

ONE LINE OR CONTROL DIAGRAM	PLAN	DESCRIPTION
52 CS	——	MEDIUM VOLTAGE DRAWOUT TYPE POWER CIRCUIT BREAKER CS=CONTROL SWITCH
FRAME TRIP	CB	LOW VOLTAGE AIR OR MOLDED CASE CIRCUIT BREAKER, 3 POLE UNLESS OTHERWISE NOTED.
*		COMBINATION MOTOR CIRCUIT PROTECTOR AND MAGNETIC MOTOR STARTER, FULL VOLTAGE NON-REVERSING UNLESS OTHERWISE NOTED: * FVR – FULL VOLTAGE REVERSING RVNR – REDUCED VOLTAGE NON-REVERSING RVAT – REDUCED VOLTAGE AUTOTRANSFORMER RVSS – REDUCED VOLTAGE SOLID STATE 2S1W – TWO SPEED, ONE WINDING RS2W – TWO SPEED, TWO WINDING (DIAGRAMATICALLY SHOWN, CONTRACTOR SHALL FIELD LOCATE)
*		NON-FUSIBLE DISCONNECT SWITCH, 600 VOLT, 3 POLE * AMPERE RATING NOTED IF OTHER THAN 30A (DIAGRAMATICALLY SHOWN, CONTRACTOR SHALL FIELD LOCATE)
* *	F	FUSIBLE DISCONNECT SWITCH, 600 VOLT, 3 POLE, * AMPERE RATING AND FUSE SIZE AS NOTED * AMPERE RATING NOTED IF OTHER THAN 30A FUSE RATING (DIAGRAMATICALLY SHOWN, CONTRACTOR SHALL FIELD LOCATE)
	P 2	MANUAL MOTOR STARTER WITH THERMAL OVERLOAD HEATER, 1 POLE UNLESS OTHERWISE NOTED "P" INDICATES WITH PILOT LIGHT "2" INDICATES TWO POLE (DIAGRAMATICALLY SHOWN, CONTRACTOR SHALL FIELD LOCATE)
	——	DRAWOUT TYPE EQUIPMENT OR DEVICE
	——	MEDIUM VOLTAGE CABLE TERMINATION
	——	MEDIUM VOLTAGE AIR INTERRUPTER SWITCH
*	——	MEDIUM VOLTAGE FUSED AIR INTERRUPTER SWITCH * FUSE RATING
	——	MEDIUM VOLTAGE FUSED MOTOR CONTROLLER
480V KVA 120/208V 3P, 4W	T	TRANSFORMER, RATINGS AND CONNECTIONS AS NOTED. UNLESS OTHERWISE NOTED ON THE SINGLE LINE DIAGRAMS, ALL DRY TYPE TRANSFORMERS SERVICING ADMINISTRATIVE AND LABORATORY SPACES SHALL HAVE A K FACTOR OF 4. ISOLATION TRANSFORMERS SHALL HAVE A K-20 RATING
* A TO 5	——	CURRENT TRANSFORMER * QUANTITY A = PRIMARY AMPERES
* V TO 120	——	POTENTIAL TRANSFORMER * QUANTITY V = PRIMARY VOLTAGE
	G	GENERATOR, RATINGS AND CONNECTIONS AS NOTED
ATS N S 100A	——	AUTOMATIC OR MANUAL TRANSFER SWITCH NO.1 (ATS-1), (MTS-1) "N" INDICATES NORMAL OR PREFERRED SOURCE "S" INDICATES STANDBY OR ALTERNATE SOURCE 100A INDICATES CONTINUOUS CURRENT RATING
*	*	VARIABLE SPEED DRIVE CONTROLLER * D.C. = D.C. DRIVE CONTROLLER SCR = SILICON CONTROLLED RECTIFIER VFD = VARIABLE FREQUENCY DRIVE
#KW	E	UNIT HEATER – ELECTRIC HEATING COIL AND FAN # – RATING
——	U	UNIT HEATER – GAS FIRED, STEAM OR WATER HEATING COIL AND FAN
5	M	MOTOR, NUMERAL INDICATES HORSEPOWER
VS VM *	——	VOLTMETER WITH SWITCH, 3 PHASE
AS AM *	——	AMMETER WITH SWITCH, 3 PHASE

ONE LINE OR CONTROL DIAGRAM	PLAN	DESCRIPTION
*	——	METER * WM – WATTMETER WHM – WATTHOUR METER WHDM – WATTHOUR DEMAND METER WHDR – WATTHOUR DEMAND RECORDER PF – POWER FACTOR METER ETM – ELAPSED TIME METER TRANSDUCER AX – CURRENT TRANSDUCER WX – WATT TRANSDUCER WHX – WATTHOUR TRANSDUCER
*	*	RELAY, NO. AS INDICATED 25 – SYNCHRONISM CHECK RELAY 27 – UNDERVOLTAGE RELAY 32 – DIRECTIONAL POWER RELAY 38 – BEARING PROTECTIVE DEVICE 40 – LOSS OF EXCITATION RELAY 42 – RUNNING CONTACTOR/PILOT RELAY 46 – REVERSE PHASE/PHASE BALANCE/CURRENT RELAY 47 – PHASE SEQUENCE VOLTAGE RELAY 49 – MACHINE OR TRANSFORMER THERMAL RELAY 50/51 – INSTANTANEOUS/TIME OVERCURRENT RELAY 50G – INSTANTANEOUS GROUND 51 – TIME OVERCURRENT RELAY 51G – TIME OVERCURRENT RELAY, GROUNDING RESISTOR TYPE 51N – TIME OVERCURRENT RELAY, RESIDUAL TYPE 51V – TIME OVERCURRENT RELAY WITH VOLTAGE RESTRAINT 51X – AUXILIARY RELAY (TRIPS CB AND ALARMS) 59 – OVERVOLTAGE RELAY 60 – NEGATIVE SEQUENCE VOLTAGE RELAY 62 – TIME DELAY RELAY 63 – OVERPRESSURE RELAY 64 – GENERATOR FIELD GROUND RELAY 67 – AC DIRECTIONAL OVERCURRENT RELAY 74 – ALARM LATCHING RELAY 83 – AUTOMATIC SELECTIVE CONTROL OR TRANSFER RELAY 86 – LOCKING-OUT RELAY 87 – DIFFERENTIAL PROTECTIVE RELAY B – SUFFIX INDICATES "BUS" G – SUFFIX INDICATES "GENERATOR" GF – GROUND FAULT ST – SHUNT TRIP T – SUFFIX INDICATES "TRANSFORMER" X – SUFFIX INDICATES "AUXILIARY"
*	——	SPECIAL CAPACITOR * SC – SURGE CAPACITOR PF – POWER FACTOR CORRECTION CAPACITOR
*	——	TUNED POWER FACTOR CORRECTION CAPACITOR
	——	PUSHBUTTON, MOMENTARY CONTACT, SPRING RETURN, NORMALLY CLOSED
	——	PUSHBUTTON, MOMENTARY CONTACT, SPRING RETURN, NORMALLY OPEN
	ES	EMERGENCY STOP PUSHBUTTON WITH RED MUSHROOM HEAD OPERATOR (MAINTAINED CONTACT)
STOP START	PBL	START-STOP PUSHBUTTON CONTROL STATION (MOMENTARY CONTACT) WITH LOCKOUT DEVICE ON STOP
	PBM	START-STOP PUSHBUTTON CONTROL STATION, MAINTAINED CONTACT WITH LOCKOUT DEVICE ON STOP
OFF ON	S/S	OFF/ON SELECTOR SWITCH
L R (XO) (OX)	LR	LOCAL/REMOTE SELECTOR SWITCH
A B C* (XOO) (OXO) (OOX)	*	3 POSITION SELECTOR SWITCH, MAINTAINED CONTACT O–OPEN X–CLOSED POSITION / TOP CONTACT / MIDDLE CONTACT / BOTTOM CONTACT A / X / O / O B / 0 / X / O C / 0 / O / X NAMEPLATE (A/B/C) HOA – HAND/OFF/AUTO HOR – HAND/OFF/REMOTE LOR – LOCAL/OFF/REMOTE RSL – RAISE/STOP/LOWER TOA – TEST/OFF/AUTO

GD/VF #	GD/VF #	GAS DETECTOR / VENTILATION FAILURE ALARM
		# INDICATES TYPE OF UNIT
		1=MASTER, 2=REMOTE

42 #	——	MOTOR STARTER COIL, NUMBER AS INDICATED TO DENOTE INTERLOCKING ONLY
CR #	——	CONTROL RELAY COIL, NUMBER AS INDICATED

ONE LINE OR CONTROL DIAGRAM	PLAN	DESCRIPTION
*	——	PILOT LIGHT, COLOR AS NOTED * R – RED G – GREEN B – BLUE W – WHITE A – AMBER
*	——	PILOT LIGHT, PUSH-TO-TEST TYPE, COLOR AS NOTED ABOVE.
* # RANGE SETPOINT		TIME DELAY RELAY RANGE AS NOTED SETPOINT AS NOTED # NUMBER AS INDICATED * TDE – TIME DELAY AFTER ENERGIZATION ON DELAY TDD – TIME DELAY AFTER DE-ENERGIZATION OFF DELAY NOTC– NORMALLY OPEN, TIMED CLOSING WHEN ENERGIZED NCTO– NORMALLY CLOSED, TIMED OPENING WHEN ENERGIZED NOTO– NORMALLY OPEN, TIMED OPENING WHEN DE-ENERGIZED NCTC– NORMALLY CLOSED, TIMED CLOSING WHEN DE-ENERGIZED
* NOTC		
NCTO		
* NOTO		
NCTC		
——	* – ##	FIELD INSTRUMENT, TAG NO. AS INDICATED * INDICATES INSTRUMENT TYPE DEFINED ON LOOP SHEETS OR P & ID ## INDICATES LOOP NO.
	LS OR ■	LIQUID LEVEL (FLOAT) SWITCH NORMALLY OPEN, CLOSES ON RISING LEVEL NORMALLY CLOSED, OPENS ON RISING LEVEL
	PS OR ■	PRESSURE OR VACUUM SWITCH NORMALLY OPEN, CLOSES ON RISING PRESSURE NORMALLY OPEN, CLOSES ON DROPPING PRESSURE NORMALLY CLOSED, OPENS ON RISING PRESSURE NORMALLY CLOSED, OPENS ON DROPPING PRESSURE
	TS OR T OR ■	TEMPERATURE SWITCH OR THERMOSTAT NORMALLY OPEN, CLOSES ON RISING TEMPERATURE NORMALLY OPEN, CLOSES ON DROPPING TEMPERATURE NORMALLY CLOSED, OPENS ON RISING TEMPERATURE NORMALLY CLOSED, OPENS ON DROPPING TEMPERATURE
	FS OR ■	FLOW SWITCH (AIR, WATER, ETC.) NORMALLY OPEN, CLOSES ON INCREASED FLOW NORMALLY CLOSED, OPENS ON INCREASED FLOW
	ZS OR ■	POSITION (LIMIT) SWITCH NORMALLY OPEN NORMALLY OPEN – HELD CLOSED NORMALLY CLOSED NORMALLY CLOSED – HELD OPEN
	WS OR ■	TORQUE SWITCH NORMALLY OPEN, CLOSES ON HIGH TORQUE NORMALLY CLOSED, OPENS ON HIGH TORQUE
#	——	UTILIZED IN CONJUNCTION WITH OTHER CONTROL SCHEMATIC SYMBOLS TO DEPICT THE PHYSICAL LOCATION OF THE DEVICE # REPRESENTS LOCATION SEE LOCATION LEGEND ON DRAWING
	——	CONDUCTORS OR CONDUITS CROSSING PATHS BUT NOT CONNECTED
	——	CONDUCTORS ELECTRICALLY CONNECTED
	S	SOLENOID VALVE

ONE LINE OR CONTROL DIAGRAM	PLAN	DESCRIPTION
LA	——	LIGHTNING ARRESTER
		GROUND OR GROUND ROD
30A	——	FUSE, AMPERE RATING AS NOTED
	HTR	STRIP HEATER OR HEATING ELEMENT
	——	INDUCTOR
TG	TG	TACHOMETER GENERATOR
	——	CONTACT, NORMALLY OPEN (NO)
	——	CONTACT, NORMALLY CLOSED (NC)
	——	OVERLOAD RELAY HEATER
K	——	KEY INTERLOCK
	TB	TERMINAL OR TEST BLOCK
	RTD	RESISTANCE TEMPERATURE DETECTOR
VE OR VE	——	VIBRATION DETECTOR
DM	DM	DAMPER MOTOR
ETM	——	ELAPSED TIME METER
M	M	MOTOR OPERATED VALVE OR GATE
	——	INDICATES LIMITS OF ELECTRICAL EQUIPMENT OR WIRING ENCLOSURE

EXISTING WORK | NEW WORK | FUTURE EXPANSION

EXISTING, NEW OR FUTURE CONDITION DESIGNATION

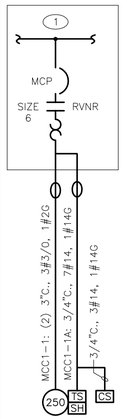

TYPICAL ONE LINE BLOCK SHOWING POWER AND CONTROL TO EQUIPMENT

INDICATES CONDUIT IS ALL OR PARTIALLY LOCATED UNDERGROUND. CONDUIT SIZE SHOWN INDICATES THE SIZE WITHIN STRUCTURE. UNDERGROUND CONDUIT SIZE IS SHOWN ON DUCT BANK SECTIONS.

MCC1-1: (2) 3"C., 3#3/0, 1#2G DENOTES A QUANTITY OF TWO (2) 3-INCH CONDUITS EACH CONTAINING THREE NO. 3/0 AWG CONDUCTORS AND 1 NO. 2 AWG GROUND CONDUCTOR, FROM NEMA SIZE 6 STARTER IN MCC-1 TO 250HP MOTOR LOAD.

MCC1-1A: 3/4"C., 7#14, 1#14G DENOTES ONE 3/4-INCH CONDUIT CONTAINING SEVEN NO. 14 AWG CONTROL CONDUCTORS AND 1 NO. 14 AWG GROUND CONDUCTOR.

MCC1-1 AND MCC1-1A: DENOTES CONDUIT IDENTIFICATION (ID) (TYPICAL)

NOTES:
1. PROTECTIVE/CONTROL DEVICE AS SHOWN.
2. CONTROL/AUXILIARY DEVICES AT OR NEAR EQUIPMENT. EQUIPMENT SHALL BE INSTALLED AND WIRED AS REQUIRED BY EQUIPMENT FURNISHED AND/OR CONTROL DIAGRAM.

GENERAL NOTE

THIS IS A STANDARD LEGEND. SOME SYMBOLS MAY NOT APPEAR ON THE DRAWINGS.

NOTES:

1. IN GENERAL CONDUIT ROUTING FOR EQUIPMENT AND DEVICES IS NOT SHOWN ON THE PLANS. THE CONTRACTOR SHALL BE RESPONSIBLE FOR ROUTING ALL CONDUITS WHICH SHALL INCLUDE CONDUITS SHOWN ON ONE-LINE AND RISER DIAGRAMS AND HOME-RUNS SHOWN ON PLAN DRAWINGS. REFER TO SPECIFICATIONS FOR MATERIALS AND INSTALLATION REQUIREMENTS.

2. THE WIRING DIAGRAMS, QUANTITY AND SIZE OF WIRES AND CONDUITS REPRESENT A SUGGESTED ARRANGEMENT BASED UPON SELECTED STANDARD COMPONENTS OF ELECTRICAL EQUIPMENT. MODIFICATIONS ACCEPTABLE TO THE ENGINEER MAY BE MADE BY THE CONTRACTOR TO ACCOMMODATE EQUIPMENT ACTUALLY PURCHASED. THE BASIC SEQUENCE AND METHOD OF CONTROL MUST BE MAINTAINED AS INDICATED ON THE DRAWINGS AND/OR SPECIFICATIONS.

3. SWITCHGEAR AND MOTOR CONTROL CENTER COMPARTMENT DESIGNATIONS AS INDICTED BELOW:
   BLANK: NOT INTENDED FOR USE. PLATE ONLY
   SPACE: EQUIPPED WITH REQUIRED BUS AND HARDWARE FOR THE FUTURE ADDITION OF BREAKERS AND/OR STARTERS WITHIN THE SIZE AND RANGE SHOWN
   SPARE: CONTAINS A COMPLETELY INSTALLED BREAKER AND/OR STARTER OF SIZE AND TYPE INDICATED FOR FUTURE USE.

4. INTERPRETATION OF ELECTRICAL DRAWINGS: CIRCUIT IDENTIFICATION, ROUTING, AND SIZES OF CONDUITS AND WIRES ARE SHOWN ON THE FOLLOWING DRAWINGS:

A. POWER ONE LINE DIAGRAMS: POWER, CONTROL AND SIGNAL WIRING REQUIREMENTS FOR ELECTRICAL DISTRIBUTION EQUIPMENT AND UTILIZATION EQUIPMENT POWERED FROM SWITCHGEAR, SWITCHBOARDS, MOTOR CONTROL CENTERS AND MAJOR POWER DISTRIBUTION PANELBOARDS ARE TYPICALLY SHOWN ON THE ONE LINE DIAGRAMS. THE PARAMETERS IDENTIFIED ON THE ONE LINE DIAGRAMS ARE: CIRCUIT IDENTIFICATION, CIRCUIT ORIGIN AND DESTINATION, CONDUIT SIZE, WIRE SIZE AND QUANTITY FOR COMPLETE CIRCUIT LENGTH, AND AUXILIARY DEVICES ASSOCIATED WITH THE CONTROL/PROTECTION OF THE POWERED EQUIPMENT, AND SIZE OF THE GROUNDING ELECTRODE CONDUCTORS.

B. INSTRUMENTATION AND CONTROL RISER DIAGRAMS: POWER, CONTROL, SIGNAL AND DATA HIGHWAY WIRING REQUIREMENTS FOR INSTRUMENTS AND CONTROL DEVICES CONTROLLED/MONITORED FROM INSTRUMENTATION AND CONTROL PANELS SUCH AS RTUS, PLCS, TERMINAL CABINETS, AND REMOTE I/O PANELS ARE TYPICALLY SHOWN ON THE INSTRUMENTATION AND CONTROL ONE LINE DIAGRAMS. THE PARAMETERS IDENTIFIED ON THE ONE LINE DIAGRAMS ARE: CIRCUIT IDENTIFICATION, CIRCUIT ORIGIN AND DESTINATION, CONDUIT SIZE, WIRE SIZE, QUANTITY AND TYPE FOR COMPLETE CIRCUIT LENGTH, AND AUXILIARY DEVICES ASSOCIATED WITH THE CONTROL/PROTECTION OF THE POWERED EQUIPMENT.

C. FLOOR PLANS: FOR DETERMINING THE LENGTH OF CIRCUITS LOCATED WITHIN STRUCTURES, FLOOR PLANS SHOW THE LOCATION OF ELECTRICAL DISTRIBUTION EQUIPMENT, CONTROL PANELS, UTILIZATION EQUIPMENT, INSTRUMENTS, ANCILLARY EQUIPMENT AND DEVICES AND THE ANTICIPATED PENETRATION LOCATIONS WHERE CONDUITS EXIT/ENTER THE STRUCTURE. HOMERUNS MAY ALSO BE SHOWN FROM MISCELLANEOUS EQUIPMENT NOT SHOWN ON A ONE LINE OR RISER DIAGRAM.

D. SITE PLANS: FOR DETERMINING THE LENGTH OF CIRCUITS EXTERIOR TO STRUCTURES AND TO IDENTIFY THE SPECIFIC REQUIREMENTS OF THE UNDERGROUND CONDUITS OR DUCT BANKS, SITE PLANS SHOW THE GENERAL ROUTING OF UNDERGROUND CONDUITS AND DUCT BANKS WITH SECTIONS INDICATING THE CONDUIT SIZE, ARRANGEMENT AND CIRCUIT ROUTING.

E. NOTE THAT CONDUIT SIZE WITHIN STRUCTURE IS INDICATED ON ONE-LINE DIAGRAM AND UNDERGROUND SIZE IS INDICATED ON DUCT BANK SECTIONS.

F. EXCEPT WHERE PERMITTED BY THE ENGINEER, NO SPLICES WILL BE ALLOWED IN MANHOLES, HANDHOLES OR OTHER BELOW GRADE LOCATED BOXES.

RECORD DRAWING

THIS RECORD DRAWING HAS BEEN PREPARED BASED ON A COMBINATION OF INFORMATION PROVIDED BY OTHERS AND BY CDM SMITH. THEREFORE, THE ENGINEER HAS NOT VERIFIED THE ACCURACY OF ALL THE INFORMATION. TO THE BEST OF THE ENGINEER'S BELIEF AND KNOWLEDGE, THE INCLUDED RECORD INFORMATION IS REASONABLY ACCURATE.

By BRAD FRANSEN Date JANUARY 2018

CDM Smith

REGISTERED PROFESSIONAL ENGINEER BRADLEY J. FRANSEN No. E 17427 EXP. 09-30-18 ELECTRICAL STATE OF CALIFORNIA

REV. NO.	DATE	DRWN	CHKD	REMARKS
4	7/2015	TCA	JTB	RECORD DRAWING (MODIFIED FOR FULL SCALE SYSTEM)
3	1/2014	TCA	BJF	ISSUED FOR CONSTRUCTION
2	5/17/13	TCA	GM	REVISED FOR PDR SUBMITTAL
1	10/24/12	PJR	JTB	PDR SUBMITTAL

DESIGNED BY: TCA
DRAWN BY: TCA
SHEET CHK'D BY: BJF
CROSS CHK'D BY: JTB
APPROVED BY: BJF
DATE: JANUARY 2018

CDM Smith
111 Academy Way, Suite 150
Irvine, California, 92617
Tel: (949) 752-5452

OMEGA CHEMICAL SUPERFUND SITE
OU-1 SOIL VAPOR EXTRACTION SYSTEM
12504 / 12512 EAST WHITTIER BOULEVARD
WHITTIER, CALIFORNIA

ELECTRICAL LEGEND AND NOTES I

PROJECT NO. 10500-216711
FILE NAME: FS-SVE_E-1.dwg
SHEET NO. E-1

© 2015 CDM SMITH ALL RIGHTS RESERVED.
REUSE OF DOCUMENTS: THESE DOCUMENTS AND DESIGNS PROVIDED BY PROFESSIONAL SERVICE, INCORPORATED HEREIN, ARE THE PROPERTY OF CDM SMITH AND ARE NOT TO BE USED, IN WHOLE OR PART, FOR ANY OTHER PROJECT WITHOUT THE WRITTEN AUTHORIZATION OF CDM SMITH.

SYMBOL	DESCRIPTION
A 3 b	INCANDESCENT, COMPACT FLUORESCENT OR H.I.D. TYPE LIGHTING FIXTURE "A" – FIXTURE TYPE (SEE LIGHTING FIXTURE SCHEDULE) "b" – CONTROLLED BY SWITCH "b" "3" – CIRCUIT NUMBER
A 3 b	FLUORESCENT TYPE LIGHTING FIXTURE, NOTATIONS SAME AS ABOVE
A 3 b	WALL MOUNTED INCANDESCENT, COMPACT FLUORESCENT OR H.I.D. TYPE LIGHTING FIXTURE, NOTATIONS SAME AS ABOVE
A 3 OR A 3	CROSS HATCH INDICATES LIGHTING FIXTURE THAT IS UNSWITCHED AND SHALL REMAIN ON AT ALL TIMES. NOTATIONS SAME AS ABOVE.
A 3 b OR A 3 b	SHADED AREA INDICATES LIGHTING FIXTURE THAT IS EQUIPPED WITH EMERGENCY BACKUP POWER SOURCE. NOTATIONS SAME AS ABOVE.
A 3	POLE MOUNTED AREA H.I.D. TYPE LIGHTING FIXTURE, NOTATIONS SAME AS ABOVE
A 3	POLE MOUNTED ROADWAY H.I.D. TYPE LIGHTING FIXTURE, NOTATIONS SAME AS ABOVE
EM 3 (*)	EMERGENCY LIGHTING BATTERY UNIT WITH TWO LAMP HEADS "EM" – FIXTURE TYPE (SEE LIGHTING FIXTURE SCHEDULE) "3" – SUPERVISORY CIRCUIT * – FIXTURE TAG #
R-2 BU-1(*)	REMOTE EMERGENCY ADJUSTABLE WALL LIGHTING FIXTURE WITH TWO LAMP HEADS "R-2" – FIXTURE TYPE (SEE LIGHTING FIXTURE SCHEDULE) * – HOME RUN TO BATTERY UNIT INDICATED. CONDUIT SHALL BE 3/4" AND CONTAIN (2) NO. 12 AWG BRANCH CIRCUIT CONDUCTORS AND (1) NO. 12 AWG GROUND CONDUCTOR UNLESS OTHERWISE INDICATED.
A 3	COMBINATION BATTERY UNIT AND EXIT SIGN. FILLED QUADRANT REPRESENTS FACE SIDE OF SIGN.
A 3	CEILING MOUNTED EXIT SIGN, NOTATIONS SAME AS ABOVE. WHEN USED, ARROW INDICATES DIRECTION OF EGRESS. FILLED QUADRANT REPRESENTS FACE SIDE OF SIGN. (DOUBLE FACE DOUBLE CHEVRONS SHOWN)
A 3	WALL MOUNTED EXIT SIGN, NOTATIONS SAME AS ABOVE. WHEN USED, ARROW INDICATES DIRECTION OF EGRESS. FILLED QUADRANT REPRESENTS FACE SIDE OF SIGN.
RH-3 E 3 BU-1(*)	REMOTE EMERGENCY CEILING LIGHTING FIXTURE. "RH-3" – FIXTURE TYPE (SEE LIGHTING FIXTURE SCHEDULE) "3" – SUPERVISORY CIRCUIT * – HOME RUN TO BATTERY UNIT INDICATED. CONDUIT SHALL BE 3/4" AND CONTAIN 2 NO. 12 AWG BRANCH CIRCUIT CONDUCTORS AND 1 NO. 12 AWG GROUND CONDUCTOR UNLESS OTHERWISE INDICATED.
	HOME RUN TO DESIGNATED EQUIPMENT. BRANCH CIRCUIT CONDUIT WITH 2 NO. 12 AWG BRANCH CIRCUIT CONDUCTORS AND 1 NO. 12 AWG GROUND CONDUCTOR UNLESS OTHERWISE NOTED. NUMBER OF ARROWS INDICATE NUMBER OF CIRCUITS. FOR MINIMUM SIZE CONDUIT PERMITTED REFER TO THE SPECIFICATIONS.
	CONDUIT CONCEALED IN WALL, IN SLAB ABOVE, OR ABOVE CEILING.
	CONDUIT CONCEALED IN OR BELOW FLOOR OR UNDERGROUND.
	CONDUIT RUN EXPOSED. RUN PARALLEL OR PERPENDICULAR TO STRUCTURE OR WALL.
	'X' INDICATES EXPLOSION PROOF CONDUIT SEAL FITTING.
	CONCRETE ENCASED DUCTBANK. WIDTH VARIES, SEE DUCTBANK SECTION/DETAILS FOR REQUIREMENTS AND WIDTH
	CONDUIT STUBBED OUT AND CAPPED
(2) 3"C., 3#3/0, 1#2G	DENOTES A QUANTITY OF TWO (2) 3-INCH CONDUITS EACH CONTAINING THREE NO. 3/0 AWG CONDUCTORS AND 1 NO. 2 AWG GROUND CONDUCTOR.
2-2/C#16 SH	DENOTES A QUANTITY OF TWO INSTRUMENT CABLES. EACH CABLE TO CONSIST OF TWO NO. 16 AWG CONDUCTORS TWISTED TOGETHER AND COVERED WITH A METALLIC SHIELD AND AN OVERALL PROTECTIVE JACKET. REFER TO THE SPECIFICATIONS FOR THE EXACT CABLE TO BE PROVIDED.
2-3/C#16 SH	SAME AS ABOVE EXCEPT CABLE TO CONSIST OF THREE NO. 16 AWG CONDUCTORS TWISTED, SHIELDED AND COVERED WITH AN OVERALL PROTECTIVE JACKET. REFER TO THE SPECIFICATIONS FOR THE EXACT CABLE TO BE PROVIDED.
(3) 4"C.	THREE 4-INCH CONDUITS
	FLEXIBLE METAL CONDUIT "WHIP" (3/4"C., 2#12, 1#12G UNLESS OTHERWISE NOTED) FOR LIQUID TIGHT MOTOR CONNECTIONS
	'X' INDICATES CONDUIT SEAL FITTING IN OTHER THAN CODE REQUIRED LOCATIONS.
⊠	INDICATES MOTOR STARTER AND/OR MOTOR CONTROL EQUIPMENT WITHIN THE ENCLOSURE.

SYMBOL	DESCRIPTION
$a	SINGLE POLE SWITCH "a" INDICATES FIXTURES CONTROLLED.
$a 2	DOUBLE POLE SWITCH "a" INDICATES FIXTURES CONTROLLED.
$c 3	THREE WAY SWITCH "c" INDICATES FIXTURES CONTROLLED.
$a 4	FOUR WAY SWITCH "a" INDICATES FIXTURES CONTROLLED.
$a D	DIMMER SWITCH "a" INDICATES FIXTURES CONTROLLED
$OS	SINGLE POLE SWITCH "OS" INDICATES A PASSIVE INFRARED OCCUPANCY SENSOR
$OS 2	DOUBLE POLE SWITCH "OS" INDICATES PROGRAMMABLE OCCUPANCY SENSOR CAPABLE OF INBOARD/OUTBOARD SWITCHING
$DT	SINGLE POLE SWITCH "DT" INDICATES DUAL TECHNOLOGY PROGRAMMABLE OCCUPANCY SENSOR CAPABLE OF SENSING MOTION AND SOUND
C 3	LIGHTING CONTACTOR WITH NUMBER OF POLES AS INDICATED
TM	TIME SWITCH
	PUSH BUTTON STATION
TYPE A	INDICATES ALL LIGHTING FIXTURES WITHIN THE ROOM OR AREA IN WHICH THIS NOTATION APPEARS SHALL BE TYPE "A" UNLESS OTHERWISE NOTED. SEE LIGHTING FIXTURE SCHEDULE FOR TYPES
	LIGHTING PANELBOARD (LP–#) SHOWN ON PLAN PER ACTUAL PANEL DIMENSIONS
	POWER PANELBOARD (PP–#) OR DISTRIBUTION PANELBOARD (DP–#) SHOWN ON PLAN PER ACTUAL PANEL DIMENSIONS
	LIGHTING CONTACTOR PANELBOARD (LCP–#) SHOWN ON PLAN PER ACTUAL PANEL DIMENSIONS
* 4	DUPLEX RECEPTACLE, 20A, 120V, 2P, 3W * GFCI – GROUND FAULT CIRCUIT INTERRUPTER TYPE WP – WEATHERPROOF T – TRANSIENT VOLTAGE SURGE SUPPRESSOR IG – ISOLATED GROUND 4 – CIRCUIT NUMBER
* 4	DUPLEX RECEPTACLE, 20A, 120V, 2P, 3W MOUNTED ABOVE COUNTER–TOP OR 42" AFF * NOTATIONS SAME AS ABOVE
* 60 3 4W	SPECIAL PURPOSE RECEPTACLE * – VOLT RATING "3" – NUMBER OF POLES "60" – AMPERE RATING "4W" – 4 WIRES IN ADDITION TO GROUND
	MULTI–OUTLET ASSEMBLY, SYMBOL DENOTES RECEPTACLE TYPE
	FLUSH FLOOR OUTLET BOX WITH TYPE OUTLET INDICATED
	UNDER FLOOR DUCT SYSTEM WITH TYPE OUTLETS INDICATED
	THREE CELL UNDER FLOOR DUCT SYSTEM JUNCTION BOX
J OR J	JUNCTION BOX
P	PULL BOX
TC	TERMINAL CABINET
OS	OCCUPANCY SENSOR
PC	PHOTOCELL
ESA	EMERGENCY EYEWASH/SHOWER ALARM STATION WITH FLOW SWITCH(ES)
	INDICATED EQUIPMENT AND MATERIALS TO BE DEMOLISHED
DUST	INDICATES THAT ALL ELECTRICAL EQUIPMENT AND MATERIALS INSTALLED WITHIN THE ROOM OR AREA IN WHICH THIS NOTATION APPEARS SHALL BE OF NEMA 12 CONSTRUCTION (OR GASKETED AND SUITABLE FOR USE IN A WET LOCATION WHERE NEMA STANDARDS DO NOT APPLY) UNLESS OTHERWISE NOTED.
DAMP OR WET	INDICATES THAT ALL ELECTRICAL EQUIPMENT AND MATERIALS INSTALLED WITHIN THE ROOM OR AREA IN WHICH THIS NOTATION APPEARS SHALL BE OF NEMA 4X CONSTRUCTION (OR GASKETED AND SUITABLE FOR USE IN A WET LOCATION WHERE NEMA STANDARDS DO NOT APPLY) UNLESS OTHERWISE NOTED.
CORROSIVE	INDICATES THAT ALL ELECTRICAL EQUIPMENT AND MATERIALS INSTALLED WITHIN THE ROOM OR AREA IN WHICH THIS NOTATION APPEARS SHALL BE OF NEMA 4X CONSTRUCTION (OR CORROSION RESISTANT CONSTRUCTION SUITABLE FOR USE IN A WET LOCATION WHERE NEMA STANDARDS DO NOT APPLY) UNLESS OTHERWISE NOTED.
CLASS I, DIV. 1 GROUP D	INDICATES THAT ALL ELECTRICAL EQUIPMENT AND MATERIALS INSTALLED WITHIN THE ROOM OR AREA IN WHICH THIS NOTATION APPEARS SHALL CONFORM TO N.E.C. REQUIREMENTS FOR THE HAZARDOUS AREA CLASSIFICATION SHOWN.

SYMBOL	DESCRIPTION
	GROUND SYSTEM GRID OR LOOP, 36" BELOW FINISHED GRADE UNLESS OTHERWISE NOTED.
	EXOTHERMIC WELD CONNECTION
	3/4" x 10'–0" GROUND ROD. UNLESS SPECIFIED OTHERWISE.
	GROUND ROD TEST WELL STATION (SEE DETAIL SHEET FOR REQUIREMENTS)
	COMMUNICATION SYSTEMS
K	TELEPHONE OUTLET FOR DESK TYPE HANDSET K = KEY SYSTEM
K	TELEPHONE OUTLET FOR WALL TYPE HANDSET (MOUNT UP 4'–6") K = KEY SYSTEM
	PAGE/PARTY TELEPHONE OUTLET FOR DESK TYPE HANDSET
	PAGE/PARTY TELEPHONE OUTLET FOR WALL TYPE HANDSET, MOUNT UP 4'–6"
S H W	PAGING SPEAKER, WALL MOUNTED H = HORN TYPE W = WIDE ANGLE TYPE
S W	PAGING SPEAKER, WALL MOUNTED, BI–DIRECTIONAL, HORN TYPE W = WIDE ANGLE TYPE
S	PAGING SPEAKER, FLUSH MOUNTED CEILING TYPE
S	PAGING SPEAKER, SURFACE MOUNTED CEILING TYPE
VC	REMOTE WALL MOUNTED VOLUME CONTROL FOR CEILING SPEAKER, MOUNT UP 5'–0"
A	PAGING SPEAKER AMPLIFIER ASSEMBLY
TM	TELEPHONE CABINET OR BACKBOARD AS NOTED
P OR C	"C" – DATA INPUT/OUTPUT CABLE OUTLET "P" – PROCESS COMPUTER SYSTEM (CAT6 RJ–45 JACK)

GD/VF #	GAS DETECTOR/VENTILATION FAILURE ALARM,
	# INDICATES TYPE OF UNIT.
	1 = MASTER, 2 = REMOTE

GB	GAS DETECTION/VENTILATION FAILURE WEATHERPROOF DUAL–LITE BEACON MOUNT TOP OF DEVICE UP 6'–8" A.F.F.
15 G	GAS DETECTION/VENTILATION FAILURE HORN/STROBE MOUNT TOP OF DEVICE UP 6'–8" A.F.F.
G	GAS DETECTION/VENTILATION FAILURE HORN, MOUNT TOP OF DEVICE UP 6'–8" A.F.F.
G	GAS DETECTION/VENTILATION FAILURE STROBE, MOUNT TOP OF DEVICE UP 6'–8" A.F.F.
	SECURITY SYSTEMS
SACP	SECURITY ALARM CONTROL PANEL
DS	SECURITY ALARM DOOR SWITCH
K	SECURITY ALARM KEY PAD
R	SECURITY SYSTEM CARD ACCESS READER
WS	SECURITY ALARM WINDOW SWITCH
	SECURITY ALARM MOTION DETECTOR
CCTV	CLOSED CIRCUIT TV CAMERA
PTZ	PAN, TILT, ZOOM CAMERA LENS CONTROLS
GB	GLASS BREAK DETECTOR
	FIRE ALARM SYSTEMS
H 200 R	FIRE ALARM HEAT DETECTOR 135 FIXED TEMPERATURE UNLESS OTHERWISE NOTED. "200" – 200 FIXED TEMPERATURE "R" – FIXED TEMPERATURE RATE–OF–RISE TYPE
I	FIRE ALARM SMOKE DETECTOR PHOTOELECTRIC TYPE UNLESS OTHERWISE NOTED. "I" – IONIZATION TYPE.
D	FIRE ALARM DUCT SMOKE DETECTOR
FACP	FIRE ALARM CONTROL PANEL
FV	FIRE ALARM VENTILATION PANEL WITH GRAPHIC PANEL
FA	REMOTE FIRE ALARM ANNUNCIATOR PANEL

SYMBOL	DESCRIPTION
F	FIRE ALARM MASTER BOX
F	FIRE ALARM HORN, MOUNT UP 7'–6"
15 F	FIRE ALARM STROBE, MOUNT UP 6'–8" 15 = CANDELA RATING
15 F	FIRE ALARM HORN AND STROBE LIGHT COMBINATION, MOUNT UP 6'–8" 15 = CANDELA RATING
F	FIRE ALARM MANUAL PULL STATION, MOUNT UP 4'–0"
VSS	SPRINKLER VALVE SUPERVISORY SWITCH
SFS	SPRINKLER FLOW ALARM SWITCH
F	FIRE ALARM BELL
FB	WEATHERPROOF HI–INTENSITY FIRE ALARM STROBE LIGHT WITH HORN
PIR	PASSIVE INFRARED DETECTOR
R	SMOKE BEAM DETECTOR (RECEIVER)
T	SMOKE BEAM DETECTOR (TRANSMITTER)
	FIRE ALARM SMOKE DETECTOR REMOTE INDICATOR AND TEST SWITCH

A / E–4 — SHEET NO. WHERE DETAIL IS DRAWN

SYMBOL WHERE THERE IS A DETAIL

DETAIL 1/4" = 1'–0" — A / E–3 — SHEET NO. WHERE THERE IS A DETAIL

SYMBOL WHERE DETAIL IS DRAWN

DETAIL SYMBOL

1 / E–4 — SHEET NO. WHERE SECTION IS DRAWN

SYMBOL WHERE THERE IS A SECTION

SECTION 1/4" = 1'–0" — 1 / E–3 — SHEET NO. WHERE SECTION IS TAKEN

SYMBOL WHERE SECTION IS DRAWN

SECTION SYMBOL

ABBREVIATIONS	
A	AMPS
AC	ALTERNATING CURRENT
AFF	ABOVE FINISHED FLOOR
AFG	ABOVE FINISHED GRADE
AL	ALUMINUM
AIC	AMPERE INTERRUPTING CAPACITY
AMP	AMPERE
ATS	AUTOMATIC TRANSFER SWITCH
AUTO	AUTOMATIC
AUX	AUXILIARY
AWG	AMERICAN WIRE GAUGE
BKR	BREAKER
BLDG	BUILDING
C	CONDUIT
CB	CIRCUIT BREAKER
CGD	COMBUSTIBLE GAS DETECTOR
CKT	CIRCUIT
CLB	CURRENT LIMITING BREAKER
CLF	CURRENT LIMITING FUSE
CP	CONTROL PANEL
CPT	CONTROL POWER TRANSFORMER
CR	CONTROL RELAY
CS	CONTROL SWITCH/CONTROL STATION
CT	CURRENT TRANSFORMER
CU	COPPER
CWS	CONDUIT WALL SEAL
DC	DIRECT CURRENT
DIA	DIAMETER
DMU	DIGITAL METERING UNIT
DN	DOWN
EC	EMPTY CONDUIT
ELEC	ELECTRICAL
ELEV	ELEVATION
EM	EMERGENCY
ENCL	ENCLOSURE OR ENCLOSED
EQUIP	EQUIPMENT
EWC	ELECTRIC WATER COOLER
EWH	ELECTRIC WATER HEATER
EX	EXISTING
FO	FIBER OPTIC
FU	FUSE
GCP	GENERATOR CONTROL PANEL
GEN	GENERATOR

ABBREVIATIONS (CONTINUED)	
G, GND	GROUND
GFI	GROUND FAULT INTERRUPTER
GRS	GALVANIZED RIGID STEEL
HACR	HEATING & AIR CONDITIONING RATED
HH	HANDHOLE
HT	HEIGHT
HID	HIGH INTENSITY DISCHARGE
HP	HORSEPOWER
HZ	HERTZ
ID	IDENTIFICATION
INSTR	INSTRUMENT
K	KILO (PREFIX)
kcmil	1000 CIRCULAR MILS
KVA	KILOVOLT AMPERES
KW	KILOWATTS
LA	LIGHTING ARRESTER
LTG	LIGHTING
LP	LIGHTING PANEL
LV	LOW VOLTAGE
MAX	MAXIMUM
MCB	MAIN CIRCUIT BREAKER
MCC	MOTOR CONTROL CENTER
MCP	MOTOR CIRCUIT PROTECTOR
MDP	MAIN DISTRIBUTION PANEL
MFR	MANUFACTURER
MH	MANHOLE
MIN	MINIMUM
MLO	MAIN LUGS ONLY
MTD	MOUNTED
MTS	MANUAL TRANSFER SWITCH
MV	MEDIUM VOLTAGE
N	NEUTRAL
NC	NORMALLY CLOSED
NO	NORMALLY OPEN OR NUMBER
NTS	NOT TO SCALE
OH	OVERHEAD
OL	OVERLOAD
PB	PULL BOX
PCP	PUMP CONTROL PANEL
PH	PHASE
PMH	POWER MANHOLE
PNL	PANEL OR PANELBOARD
PR	PAIR
PRI	PRIMARY
PT	POTENTIAL TRANSFORMER
PVC	POLYVINYL CHLORIDE
RECPT	RECEPTACLE
REQD	REQUIRED
QTY	QUANTITY
SA	SURGE ARRESTER
SEC	SECONDS OR SECONDARY
SH	SHIELDED OR SPACE HEATER
SHH	SIGNAL HANDHOLE
SPD	SURGE PROTECTIVE DEVICE
SS	STAINLESS STEEL
SV	SOLENOID VALVE
SW	SWITCH
SWBD	SWITCHBOARD
SWGR	SWITCHGEAR
TC	TIME TO CLOSE OR TRAY CABLE
TEL	TELEPHONE
TO	TIME TO OPEN
TSP	TWISTED SHIELDED PAIR
TST	TWISTED SHIELDED TRIAD
TVSS	TRANSIENT VOLTAGE SURGE SUPRESSOR
TS	TWISTED SHIELDED OR THERMAL SWITCH
TYP	TYPICAL
UG	UNDERGROUND
UPS	UNINTERRUPTIBLE POWER SUPPLY
V	VOLTS
VA	VOLT AMPS
VFD	VARIABLE FREQUENCY DRIVE
W	WATTS, WIDTH, WITH, WIRE
WP	WEATHERPROOF
XP	EXPLOSION PROOF
XFMR	TRANSFORMER

GENERAL NOTE

THIS IS A STANDARD LEGEND. SOME SYMBOLS MAY NOT APPEAR ON THE DRAWINGS.

RECORD DRAWING

THIS RECORD DRAWING HAS BEEN PREPARED BASED ON A COMBINATION OF INFORMATION PROVIDED BY OTHERS AND BY CDM SMITH. THEREFORE, THE ENGINEER HAS NOT VERIFIED THE ACCURACY OF ALL THE INFORMATION. TO THE BEST OF THE ENGINEER'S BELIEF AND KNOWLEDGE, THE INCLUDED RECORD INFORMATION IS REASONABLY ACCURATE.

By BRAD FRANSEN Date JANUARY 2018

CDM Smith

REGISTERED PROFESSIONAL ENGINEER BRADLEY J. FRANSEN No. E 17427 EXP. 09-30-18 ELECTRICAL STATE OF CALIFORNIA

REV. NO.	DATE	DRWN	CHKD	REMARKS
5	7/2015	TCA	JTB	RECORD DRAWING (MODIFIED FOR FULL SCALE SYSTEM)
4	4/2014	TCA	BJF	REVISED IFC DRAWING
3	1/2014	TCA	BJF	ISSUED FOR CONSTRUCTION
2	5/17/13	TCA	GM	REVISED FOR PDR SUBMITTAL
1	10/24/12	PJR	JTB	PDR SUBMITTAL

DESIGNED BY: TCA
DRAWN BY: TCA
SHEET CHK'D BY: BJF
CROSS CHK'D BY: JTB
APPROVED BY: BJF
DATE: JANUARY 2018

CDM Smith
111 Academy Way, Suite 150
Irvine, California, 92617
Tel: (949) 752-5452

OMEGA CHEMICAL SUPERFUND SITE
OU-1 SOIL VAPOR EXTRACTION SYSTEM
12504 / 12512 EAST WHITTIER BOULEVARD
WHITTIER, CALIFORNIA

ELECTRICAL LEGEND AND NOTES II

PROJECT NO. 10500-216711
FILE NAME: FS-SVE_E-2.dwg
SHEET NO. E-2

C:\cdmxm\riehlepj\d1257128_E-1 05/14/13 14:37 riehlepj XREFS: PREL IM NOT FOR CONST, CDMS_2234-FULL SVE, CA-Rovi-S-2013
©2015 CDM SMITH ALL RIGHTS RESERVED.
REUSE OF DOCUMENTS: THESE DOCUMENTS AND DESIGNS PROVIDED BY PROFESSIONAL SERVICE, INCORPORATED HEREIN, ARE THE PROPERTY OF CDM SMITH AND ARE NOT TO BE USED, IN WHOLE OR PART, FOR ANY OTHER PROJECT WITHOUT THE WRITTEN AUTHORIZATION OF CDM SMITH.

© 2012 CDM SMITH ALL RIGHTS RESERVED.
REUSE OF DOCUMENTS: THESE DOCUMENTS AND DESIGNS PROVIDED BY PROFESSIONAL SERVICE, INCORPORATED HEREIN, ARE THE PROPERTY OF CDM SMITH AND ARE NOT TO BE USED, IN WHOLE OR PART, FOR ANY OTHER PROJECT WITHOUT THE WRITTEN AUTHORIZATION OF CDM SMITH.

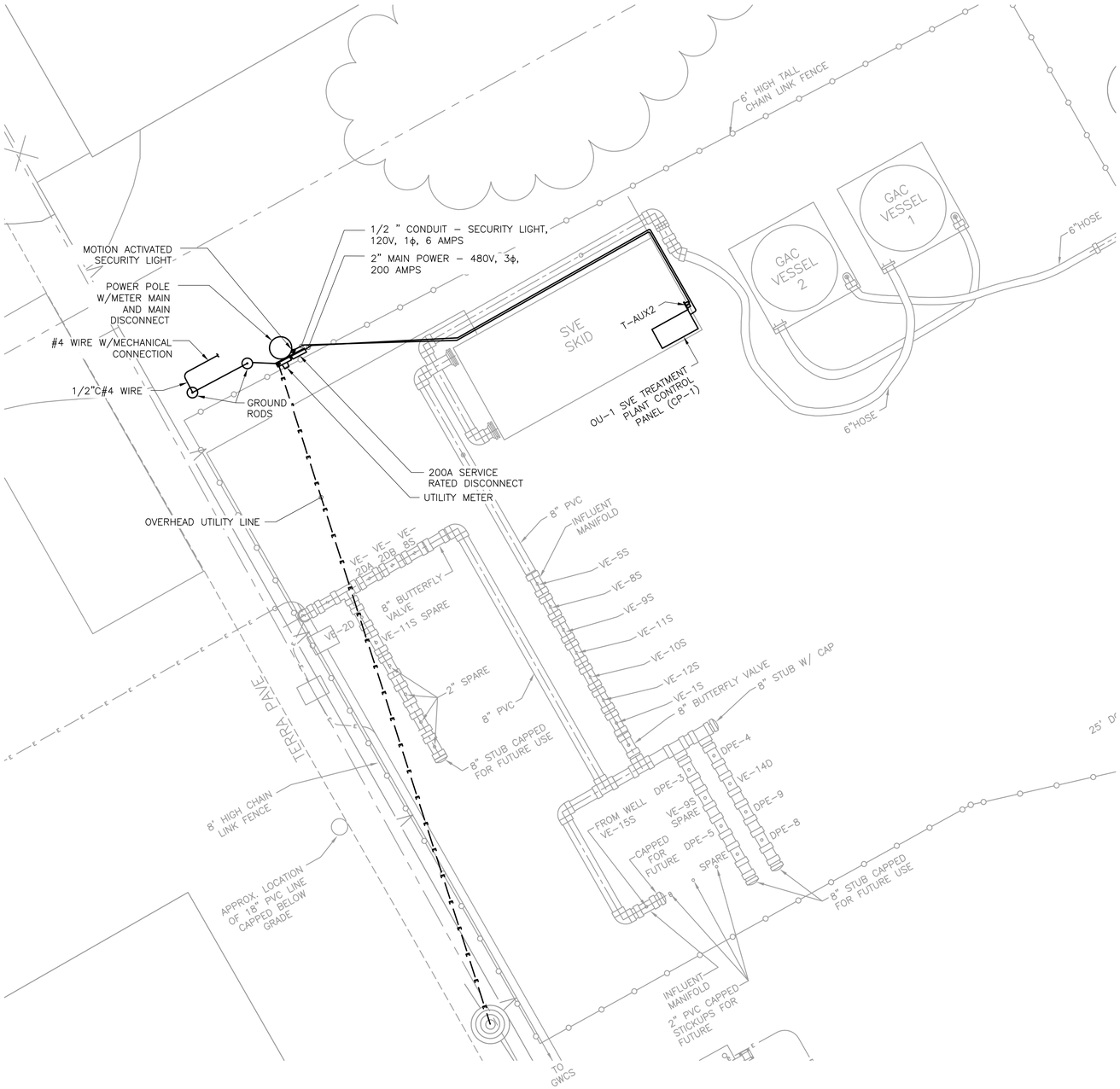

ENLARGED – OU–1 SVE FACILITY POWER SITE

PLAN

3" = 1'

3" = 1'– 0"

.25 0 .25 .5

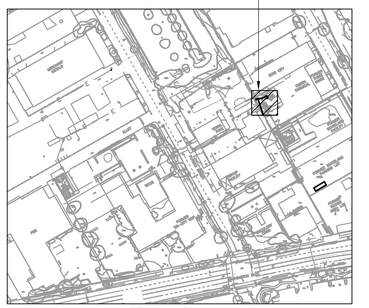

KEY PLAN

N.T.S.

RECORD DRAWING

THIS RECORD DRAWING HAS BEEN PREPARED BASED ON A COMBINATION OF INFORMATION PROVIDED BY OTHERS AND BY CDM Smith. THE ENGINEER HAS NOT VERIFIED THE ACCURACY OF ALL THE INFORMATION. TO THE BEST OF THE ENGINEER'S BELIEF AND KNOWLEDGE, THE INCLUDED RECORD INFORMATION IS REASONABLY ACCURATE.

By BRAD FRANSEN Date JULY 2018

CDM Smith

REGISTERED PROFESSIONAL ENGINEER BRADLEY J. FRANSEN No. E 17427 EXP. 09–30–18 ELECTRICAL STATE OF CALIFORNIA

REV. NO.	DATE	DRWN	CHKD	REMARKS
6	7/2018	TCA	JTB	RECORD DRAWING (MODIFIED FOR RACR)
5	6/2018	TCA	JTB	RECORD DRAWING – EPA COMMENT INCORPORATION
4	1/2018	TCA	JTB	RECORD DRAWING – REDLINE INCORPORATION
3	7/2015	TCA	JTB	RECORD DRAWING (MODIFIED FOR FULL SCALE SYSTEM)
2	9/02/14	TCA	JTB	SCE REVIEW
1	8/26/14	TCA	JTB	SCE REVIEW

DESIGNED BY: TCA
DRAWN BY: TCA
SHEET CHK'D BY: BJF
CROSS CHK'D BY: JTB
APPROVED BY: BJF
DATE: JULY 2018

CDM Smith
111 Academy Way, Suite 150
Irvine, California, 92617
Tel: (949) 752-5452

OMEGA CHEMICAL SUPERFUND SITE
12504 / 12512 EAST WHITTIER BOULEVARD
12471 WASHINGTON BOULEVARD
WHITTIER, CALIFORNIA

ELECTRIC UTILITY AND POWER SITE PLAN

PROJECT NO. 10500–97768
FILE NAME: OU1SVE–E–3.dwg

SHEET NO.
E-3

KEYED NOTES:

(1) VENDOR PROVIDED EQUIPMENT.

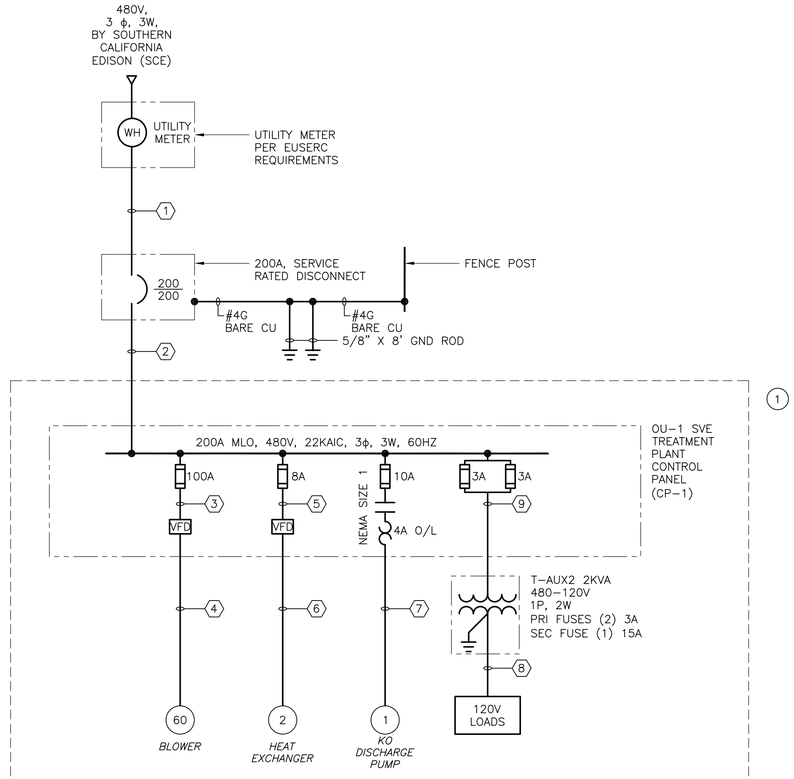

OU-1 – SOIL VAPOR EXTRACTION SYSTEM

SINGLE LINE DIAGRAM

N.T.S.

CONDUIT AND WIRE LEGEND

(NUMBERS REFERENCE THIS SHEET ONLY)

NO.	DESCRIPTION
1	2"C, 3#3/0, 1#4G
2	2"C, 3#1, 1#1G
3	3#3, 1#8G
4	1-1/2"C, 3#3, 1#8G
5	3#14, 1#14G
6	3/4"C, 3#14, 1#14G
7	1/2"C, 3#14, 1#14G
8	1/2"C, 6#14, 1#14G
9	2#14, 1#14G

LOAD COMPUTATION AT 480V LEVEL

LOADS	HP/KVA	AMPERE
MAIN BLOWER	60HP	77
HEAT EXCHANGER	2HP	3.4
KO DISCHARGE PUMP	1HP	2.1
T-AUX2	*	*
SUBTOTAL AMPERE		82.5
25% LARGEST MOTOR		19.25
TOTAL CONNECT LOAD AMPERE		101.75

RECORD DRAWING

THIS RECORD DRAWING HAS BEEN PREPARED BASED ON A COMBINATION OF INFORMATION PROVIDED BY OTHERS AND BY CDM Smith. THE ENGINEER HAS NOT VERIFIED THE ACCURACY OF ALL THE INFORMATION. TO THE BEST OF THE ENGINEER'S BELIEF AND KNOWLEDGE, THE INCLUDED RECORD INFORMATION IS REASONABLY ACCURATE.

By BRAD FRANSEN Date JULY 2018

CDM Smith

REGISTERED PROFESSIONAL ENGINEER
BRADLEY J. FRANSEN
No. E 17427
EXP. 09-30-18
ELECTRICAL
STATE OF CALIFORNIA

REV. NO.	DATE	DRWN	CHKD	REMARKS
10	7/2018	TCA	JTB	RECORD DRAWING (MODIFIED FOR RACR)
9	6/2018	TCA	JTB	RECORD DRAWING – EPA COMMENT INCORPORATION
8	1/2018	TCA	JTB	RECORD DRAWING – REDLINE INCORPORATION
7	6/2015	TCA	JTB	RECORD DRAWING (MODIFIED FOR FULL SCALE SYSTEM)
6	1/2014	TCA	BJF	ISSUED FOR CONSTRUCTION
5	5/17/13	TCA	GM	REVISED FOR PDR SUBMITTAL
4	10/24/12	PJR	JTB	PDR SUBMITTAL
3	5-11	JBP	JLD	REVISED AS-BUILT – UPDATED FOR ISVE EXPANSION
2	6/10	PJR		FOR RECORD DRAWING
1	1/20/10	JN	MUM	FOR PRELIMNARY DESIGN REPORT

DESIGNED BY: TCA
DRAWN BY: TCA
SHEET CHK'D BY: BJF
CROSS CHK'D BY: JTB
APPROVED BY: BJF
DATE: JULY 2018

CDM Smith
111 Academy Way, Suite 150
Irvine, California, 92617
Tel: (949) 752-5452

OMEGA CHEMICAL SUPERFUND SITE
OU-1 SOIL VAPOR EXTRACTION SYSTEM
12504 / 12512 EAST WHITTIER BOULEVARD
WHITTIER, CALIFORNIA

RISER DIAGRAM, LOAD COMPUTATION, AND CONDUIT AND WIRE LEGEND

PROJECT NO. 10500-216711
FILE NAME: OU1SVE-E-5.dwg
SHEET NO.
E-5

C:\cdmxrn\richtlepj\d1257128\ E-2 05/10/13 13:38 richtlepj XREFS: PRELIM NOT FOR CONST, CDMS_2234-FULL SVE, CA-Rovi-S-2013
©2015 CDM SMITH ALL RIGHTS RESERVED.
REUSE OF DOCUMENTS: THESE DOCUMENTS AND DESIGNS PROVIDED BY PROFESSIONAL SERVICE, INCORPORATED HEREIN, ARE THE PROPERTY OF CDM SMITH AND ARE NOT TO BE USED, IN WHOLE OR PART, FOR ANY OTHER PROJECT WITHOUT THE WRITTEN AUTHORIZATION OF CDM SMITH.

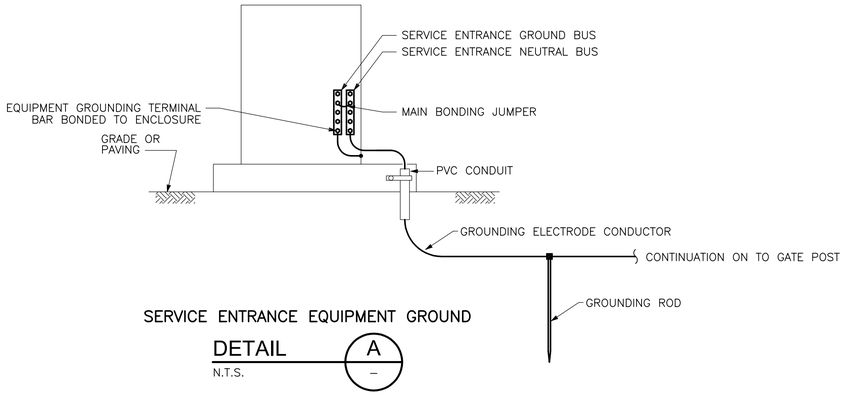

SERVICE ENTRANCE EQUIPMENT GROUND

DETAIL A
N.T.S. –

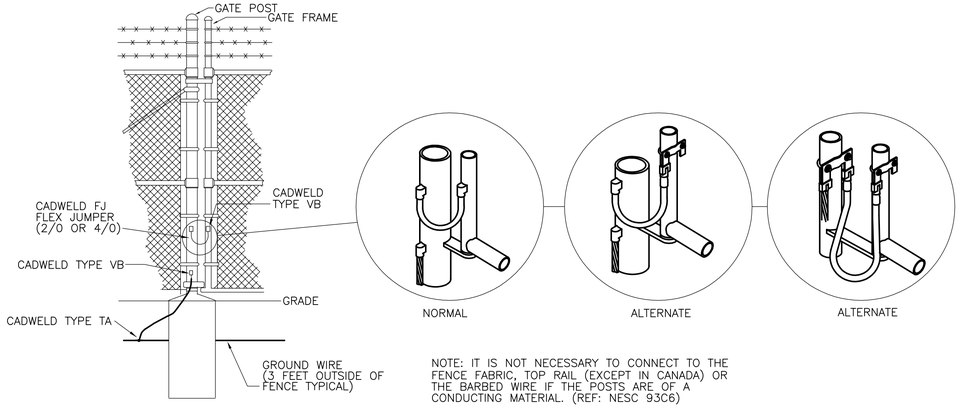

NOTE: IT IS NOT NECESSARY TO CONNECT TO THE FENCE FABRIC, TOP RAIL (EXCEPT IN CANADA) OR THE BARBED WIRE IF THE POSTS ARE OF A CONDUCTING MATERIAL. (REF: NESC 93C6)

GATE & GATE POST

GATE & GATE POST GROUNDING

DETAIL C
N.T.S. –

ITEM NUMBER	QUANTITY	DESCRIPTION	MANUFACTURER	CAT #
1	1	CADWELD CABLE TO ROD	CADWELD	TYPE GT
2	1	GROUND ROD, COPPER CLAD, 8 FT MIN.	ERITECH	
3	1	CADWELD CABLE TO ROD	CADWELD	TYPE GS

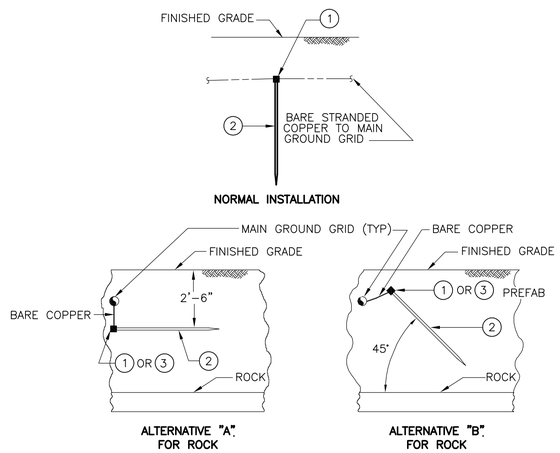

GROUND ROD INSTALLATIONS PER NEC 250-83(c) (3)

DETAIL B
N.T.S. –

RECORD DRAWING

THIS RECORD DRAWING HAS BEEN PREPARED BASED ON A COMBINATION OF INFORMATION PROVIDED BY OTHERS AND BY CDM SMITH. THEREFORE, THE ENGINEER HAS NOT VERIFIED THE ACCURACY OF ALL THE INFORMATION. TO THE BEST OF THE ENGINEER'S BELIEF AND KNOWLEDGE, THE INCLUDED RECORD INFORMATION IS REASONABLY ACCURATE.

By BRAD FRANSEN Date JANUARY 2018

CDM Smith

REGISTERED PROFESSIONAL ENGINEER
BRADLEY J. FRANSEN
No. E 17427
EXP. 09-30-18
ELECTRICAL
STATE OF CALIFORNIA

REV. NO.	DATE	DRWN	CHKD	REMARKS
2	1/2018	TCA	JTB	RECORD DRAWING – REDLINE INCORPORATION
1	6/2015	TCA	JTB	RECORD DRAWING (MODIFIED FOR FULL SCALE SYSTEM)

DESIGNED BY: TCA
DRAWN BY: TCA
SHEET CHK'D BY: BJF
CROSS CHK'D BY: JTB
APPROVED BY: BJF
DATE: JANUARY 2018

CDM Smith
111 Academy Way, Suite 150
Irvine, California, 92617
Tel: (949) 752-5452

OMEGA CHEMICAL SUPERFUND SITE
OU-1 SOIL VAPOR EXTRACTION SYSTEM
12504 / 12512 EAST WHITTIER BOULEVARD
WHITTIER, CALIFORNIA

ELECTRICAL DETAILS

PROJECT NO. 10500-216711
FILE NAME: FS-SVE_E-7.dwg

SHEET NO.
E-7

C:\cdmxm\riehlepj\d1257128\ E-2 05/10/13 13:38 riehlepj XREFS: PRELIM NOT FOR CONST, CDMS_2234-FULL SVE, CA-Rovi-S-2013
© 2015 CDM SMITH ALL RIGHTS RESERVED.
REUSE OF DOCUMENTS: THESE DOCUMENTS AND DESIGNS PROVIDED BY PROFESSIONAL SERVICE, INCORPORATED HEREIN, ARE THE PROPERTY OF CDM SMITH AND ARE NOT TO BE USED, IN WHOLE OR PART, FOR ANY OTHER PROJECT WITHOUT THE WRITTEN AUTHORIZATION OF CDM SMITH.

PIPING LEGEND

MATERIAL CODES

DCHDPE	DUAL CONTAINED HIGH-DENSITY POLYETHYLENE PIPE
BIP	BLACK IRON PIPE
BIP(I)	BLACK IRON PIPE (INSULATED)
CS	CARBON STEEL
FRP	150 psi PRESSURE CLASS FIBERGLASS REINFORCED PLASTIC PIPE
HDPE	150 psi PRESSURE CLASS HIGH DENSITY POLYETHYLENE PIPE
PVC	PVC-SCHEDULE 40 (WELLFIELD) AND 80 (PLANT)
PVC/D	PVC GRAVITY SEWER PIPE
CU	COPPER TUBING
CPVC	SCHEDULE 80 CPVC PIPE
EPDM	EPDM TUBING
C20	SCHEDULE 40 CARPENTER 20 ALLOY PIPE
304SS	TYPE 304/304L STAINLESS STEEL PIPE
316SS	TYPE 316/316L STAINLESS STEEL PIPE
PVDF	230 psi PRESSURE CLASS PVDF PIPE
PP	150 psi PRESSURE CLASS POLYPROPYLENE PIPE
STL	GALVANIZED SCH 40 STEEL PIPE
STL/L	SCH 40 STEEL PIPE, LINED
DIP	DUCTILE IRON PIPE
CMLSP	CEMENT MORTAR-LINED STEEL PIPE
ABS	ACRYLONITRILE BUTADIENE STYRENE

OPERATING FLUID CODE

AA	ACETIC ACID	LPA	LOW PRESSURE AIR
BD	BLOWDOWN	LPDG	LOW PRESSURE DIGESTER GAS
BS	BOTTOM SLUDGE	LO	LUBE OIL
BYP	BYPASS	MA	MURIATIC ACID
C	CHILLED WATER	NAOH	SODIUM HYDROXIDE (CAUSTIC SOLUTION)
CHEMD	CHEMICAL DRAIN	NG	NATURAL GAS
CND	CONDENSER	OF	OVERFLOW
COND	CONDENSATE	O2	OXYGEN
CS	CHLORINE SOLUTION	P	PROPANE
CSL	CAUSTIC SOLUTION	PA	PHOSPHORIC ACID
CW	CITY WATER	PD	PROCESS DRAIN
D	DRAIN	PE	PRIMARY EFFLUENT
DC	DIGESTER CLEANING	PI	PRIMARY INFLUENT
DISCH	DISCHARGE	POL	POLYMER
DG	DIGESTER GAS	POTW	POTABLE WATER
EGW	EXTRACTED GROUNDWATER	PS	PRIMARY SLUDGE
FA	FOUL AIR	PV	PROCESS VAPOR
FD	FLOOR DRAIN	PW	PLANT WATER
FECL2	FERROUS CHLORIDE	RD	ROOF DRAIN
FECL3	FERRIC CHLORIDE	RS	RAW SEWAGE
FM	FORCE MAIN	RAS	RETURN ACTIVATED SLUDGE
FO	FUEL OIL	REC	RECIRCULATION
FSW	FIRE SUPPLY WATER	RW	RECLAIMED WATER
FW	FEED WATER	S	SCUM
GR	GRIT	SAM	SAMPLE
HCL	HYDROCHLORIC ACID	SEW	SEWER
HPA	HIGH PRESSURE AIR	SC	SLUDGE CAKE
HPDG	HIGH PRESSURE DIGESTER GAS	SD	SANITARY DRAIN
HPNG	HIGH PRESSURE NATURAL GAS	SE	SECONDARY EFFLUENT
HPW	HIGH PRESSURE WATER	SI	SECONDARY INFLUENT
HW	HOT WATER	SN	SUPERNATANT
HWR	HOT WATER RETURN	SO	SLOP OIL
HWS	HOW WATER SUPPLY	SOD	SLOP OIL DRAIN
HYPO	SODIUM HYPOCHLORITE	SPD	SUMP PUMP DISCHARGE
H2O2	HYDROGEN PEROXIDE	SS	SANITARY SEWER
IA	INSTRUMENT AIR	STRM	STORM DRAIN
IRRIG	IRRIGATION	SV	SOIL VAPOR
IRW	IRRIGATION WATER	SW	SEAL WATER
IW	INDUSTRIAL WATER	SWR	SOFTENED WATER
JWR	JACKET WATER RETURN	TW	TREATED WATER
JWS	JACKET WATER SUPPLY	V	VENT
JOS	JOINT OUTFALL SEWER		

PIPE LINE TAGGING

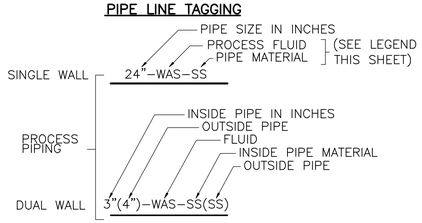

PIPE FITTINGS AND CONNECTORS

- BLIND FLANGE
- UNION
- Y-STRAINER
- CONCENTRIC REDUCER/ENLARGER (RED)
- ECCENTRIC REDUCER/ENLARGER
- PIPE EXTENDING PERPENDICULAR FROM VIEWER
- PIPE EXTENDING PERPENDICULAR TO VIEWER
- FLEXIBLE PIPE CONNECTOR (*)
- FLANGED JOINT
- QUICK CONNECTION
- THREADED CONNECTION W/CAP
- DOUBLE WALLED PIPE
- CONTINUED PIPE
- RESTRAIN ALL JOINTS UNLESS NOTED
- CAMLOCK CONNECTION

VALVE LEGEND

VALVE ACTUATION

FAILURE POSITION:
FO = FAIL OPEN
FC = FAIL CLOSED
FLP = FAIL LAST POSITION

- M — MOTOR ACTUATOR
- S — SOLENOID ACTUATOR
- P — PNEUMATIC ACTUATOR
- PNEUMATIC ACTUATOR
- DIAPHRAGM

VALVE AND GATES SYMBOLS

VALVE POSITION:
NC = NORMALLY CLOSED
NO = NORMALLY OPEN

- HAND CONTROL VALVE
- ANGLE VALVE
- 3-WAY VALVE
- BALL CHECK VALVE
- BALL VALVE (TRUE-UNION ONLY)
- 3-WAY BALL VALVE
- 4-WAY BALL VALVE
- BUTTERFLY VALVE
- CHECK VALVE
- DUAL DISK CHECK VALVE DIAPHRAGM CHECK VALVE
- DIAPHRAGM VALVE
- GATE VALVE
- KNIFE GATE VALVE
- GLOBE VALVE
- NEEDLE VALVE
- PLUG VALVE (PV)
- 3-WAY PLUG VALVE
- 4-WAY PLUG VALVE
- PINCH VALVE
- TELESCOPING VALVE
- ROTARY VALVE
- PRESSURE RELIEF VALVE
- VACUUM RELIEF VALVE
- AIR/VACUUM RELIEF VALVE
- PRESSURE REDUCING VALVE
- BACKFLOW PREVENTER VALVE
- SAMPLE VALVE
- SLEEVE VALVE
- VACUUM BREAKER VALVE
- AIR VENT RELIEF VALVE
- AIR RELIEF VALVE
- FOOT VALVE W/ STRAINER
- COMBINATION AIR/VACCUM RELEASE VALVE
- VACUUM REGULATOR
- FLAP VALVE
- INJECTION VALVE
- SLUICE GATE
- WEIR GATE
- SLIDE GATE
- REGULATED SIDE PRESSURE REGULATING VALVE OR BACK PRESSURE VALVE OR PRESSURE SUSTAINING VALVE

RECORD DRAWING

THIS RECORD DRAWING HAS BEEN PREPARED BASED ON A COMBINATION OF INFORMATION PROVIDED BY OTHERS AND BY CDM Smith. THE ENGINEER HAS NOT VERIFIED THE ACCURACY OF ALL THE INFORMATION. TO THE BEST OF THE ENGINEER'S BELIEF AND KNOWLEDGE, THE INCLUDED RECORD INFORMATION IS REASONABLY ACCURATE.

By RAVI SUBRAMANIAN Date JANUARY 2018

CDM Smith

EQUIPMENT SYMBOLS

- MOTOR
- MOTOR WITH VFD
- CHEMICAL METERING PUMP
- SUBMERSIBLE PUMP
- VERTICAL TURBINE PUMP
- CENTRIFUGAL PUMP
- CENTRIFUGAL BLOWER/FAN
- POSITIVE DISPLACEMENT BLOWER
- AIR COMPRESSOR
- PLUNGER/POSITIVE DISPLACEMENT PUMP
- DOUBLE DISK PUMP
- AIR OPERATED DIAPHRAGM PUMP
- PERISTALTIC PUMP
- GEAR/ROTARY LOBE PUMP
- DIAPHRAGM PUMP
- GRINDER
- PROGRESSIVE CAVITY PUMP
- HOSE PUMP
- BELT CONVEYOR
- SCREW CONVEYOR
- MIXER
- STATIC MIXER
- IN-LINE MOTIONLESS MIXER
- IN-LINE MECHANICAL MIXER
- PULSATION DAMPENER
- AIR INTAKE FILTER
- TANK VENT FILTER
- STRAINER, FILTER OR COALESCER
- FLOW CONDITIONER
- INJECTION QUILL WITH CORPORATION STOP
- SCRUBBER
- BASKET SCREEN
- BAR SCREEN
- AUTO SAMPLER
- FIRE HYDRANT
- VENT
- PULSATION DAMPENER
- DRAIN
- FIRE DEPARTMENT CONNECTION
- DRY PIPE VALVE
- SPRINKER(S)
- WATER MOTOR GONG
- ACCUMULATOR
- SIGHT GLASS
- AUTOMATIC DRIP TRAP
- RUPTURE DISK
- HORN
- BEACON
- DIAPHRAGM SEAL
- FILTER
- SILENCER

EQUIPMENT ABBREVIATIONS

AC	AIR CONDITIONING
ADN	ADVANCED DIGITAL NETWORK
ARV	AIR RELEASE VALVE
BFP	BELT FILTER PRESS
BFT	BIOFILTER
BFV	BUTTERFLY VALVE
BV	BALL VALVE
BOL	BOILER
BSR	BARSCREEN
BWR	BLOWER
CB	CATCH BASIN
CEN	CENTRIFUGE
CLR	SCUM OR SLUDGE COLLECTOR
CO	CLEAN OUT
CPLG	COUPLING
CV	CHECK VALVE
CLS	CLASSIFIER
CMP	COMPRESSOR
CND	CONDENSER
CVY	CONVEYOR
DIG	DIGESTER
DMPR	BACK DRAFT DAMPER
DRY	DRYER
DV	DIAPHRAGM VALVE
EJ	EXPANSION JOINT
ENG	ENGINE
EVP	EVAPORATOR
EXH	EXHAUST
EXR	EXCHANGER
FAP	FIRE ALARM PANEL
FH	FIRE HYDRANT
FIL	FILTRATE
FL OR FJ	FLANGED JOINT
FLR	FLARE
FLT	FILTER
FLV	FLAPPER VAVLE
GAT	GATE
GBX	GEARBOX
GDR	GRINDER
GEN	GENERATOR
GLV	GLOBE VALVE
GV	GATE VALVE
HNDLG	HANDLING
HDWKS	HEADWORKS
HTR	HEATER
IBD	ISOLATION/BALANCE DAMPER
INF	INFLUENT
JB	JUNCTION BOX
LVR	LOUVER
MTR	MOTOR
MXR	MIXER
NV	NEEDLE VALVE
OPS	OPERATOR (ACTUATOR)
PC	PRIMARY CLARIFIER
PD	POSITIVE DISPLACEMENT
PIV	PINCH VALVE
PV	PLUG VALVE
PMP	PUMP
PNL	PANEL
PRD	PRES REDUCING VALVE
PRG	PRES REGULATING VALVE
PRV	PRE RELIEF VALVE
PRVB	PRES RELIEF/VACUUM BREAKER
RPD	REDUCED PRINCIPLE DEVICE
RUD	ROLL-UP DOOR
SAM	SAMPLE
SBR	SCRUBBER
SCRNGS	SCREENINGS
SFS	SAFETY SHOWER
SOF	SOFTENER
SP	SAMPLE POINT
SPD	SUMP PUMP DISCHARGE
SPR	SEPERATOR
ST	STEAM
STA	STATION
STR	STRAINER
STRUC	STRUCTURAL
SWP	SWEEP ARM ASSEMBLY
TEL	TELEPHONE
TELCO	TELEPHONE COMPANY
TNK	TANK
TUB	TUB (ELECTRICAL)
TUR	TURBINE
TSV	TELESCOPING VALVE
VA	VALVE
VAC	VACUUM
VB	VALVE BOX
VFD	VARIABLE FREQUENCY DRIVE
VNTV	VENT VALVE
VKG	KNIFE VALVE
WH	WATER HEATER
WSHR	WASHER
WSS	WASTESIDE STREAM
XFMR	TRANSFORMER

REGISTERED PROFESSIONAL ENGINEER
RAVI SUBRAMANIAN
No. C053679
Exp. 06-30-2019
CIVIL
STATE OF CALIFORNIA

REV. NO.	DATE	DRWN	CHKD	REMARKS
5	1/2018	MP	AFR	RECORD DRAWING (MODIFIED TO DELINIATE OU1)
4	7/2015	PJR	MTG	RECORD DRAWING (MODIFIED FOR FULL-SCALE SYSTEM)
3	1/2014	PJR	JTB	ISSUED FOR CONSTRUCTION
2	7/12/13	PJR	DDN	REVISED FOR PDR SUBMITTAL
1	10/24/12	PJR	JTB	PDR SUBMITTIAL

DESIGNED BY: AFR
DRAWN BY: MP
SHEET CHK'D BY: AFR
CROSS CHK'D BY: JTB
APPROVED BY: RS
DATE: JANUARY 2018

CDM Smith
111 Academy Way. Suite 150
Irvine, California, 92617
Tel: (949) 752-5452

OMEGA CHEMICAL SUPERFUND SITE
OU-1 SOIL VAPOR EXTRACTION SYSTEM
12504 / 12512 EAST WHITTIER BOULEVARD
WHITTIER, CALIFORNIA

PIPING AND INSTRUMENTATION DIAGRAM
LEGEND I

PROJECT NO. 10500-216711
FILE NAME: OU1SVE-I-1.DWG
SHEET NO.
I-1

C:\cdmxm\riehlep\a1476849\I-1 01/16/14 11:20 riehlep XREFS: IFC-CA-Ravi-S-2015, IFC-CDMS_2234, IFC-ISSUED FOR CONST
©2016 CDM SMITH ALL RIGHTS RESERVED
REUSE OF DOCUMENTS: THESE DOCUMENTS AND DESIGNS PROVIDED BY PROFESSIONAL SERVICE, INCORPORATED HEREIN, ARE THE PROPERTY OF CDM SMITH AND ARE NOT TO BE USED, IN WHOLE OR PART, FOR ANY OTHER PROJECT WITHOUT THE WRITTEN AUTHORIZATION OF CDM SMITH.

FLOW ELEMENTS

- ORIFICE PLATE
- MAGNETIC FLOW METER
- PROPELLER FLOW METER
- TURBINE FLOW METER
- ULTRASONIC FLOW METER
- THERMAL MASS FLOWMETER
- VENTURI
- POSITIVE DISPLACEMENT FLOW METER
- AVERAGING PITOT TUBE
- VORTEX FLOW METER
- WEIR
- ROTAMETER (FI)
- ROTAMETER WITH INTEGRAL NEEDLE VALVE (FI)

LEVEL ELEMENTS

- ULTRASONIC
- RADAR
- CAPACITANCE
- CONDUCTANCE
- BUBBLER TUBE
- FLOAT SWITCH
- VENT
- CALIBRATION COLUMN
- GUIDED RADAR (LE)
- FLOAT

GENERAL INSTRUMENT OR FUNCTION SYMBOLS

FUNCTION SYMBOLS			
	FIELD MOUNTED	PRIMARY PANEL NORMALLY ACCESSIBLE TO OPERATOR (NOTE 1)	LOCAL PANEL NORMALLY ACCESSIBLE TO OPERATOR (NOTE 1)
DISCRETE INSTRUMENTS	○	⊖	⊖
PLC OR COMPUTER SHARED CONTROL	□	⊟	⊟
COMPUTER FUNCTION	⬡	⬡	⬡
PROGRAMMABLE CONTROLLER	◇	◇	◇

NOTES:

1. A DASHED CENTER SINGLE LINE OR DOUBLE LINE INDICATES PRIMARY OR LOCAL PANEL NORMALLY INACCESSIBLE TO OPERATOR OR BACK PANEL MOUNTED.

Ex: ○ ◇ ◇

- I — MISCELLANEOUS HARDWIRED INTERLOCK
- I — PLC INTERLOCK
- INSTRUMENTS SHARING COMMON HOUSING
- PILOT LIGHT
- OR / AND — LOGIC BLOCK
- MISCELLANEOUS EQUIPMENT SUPPLIED BY OTHERS

ANALYTICAL DESCRIPTORS

CL2	CHLORINE
COND	CONDUCTIVITY
DO	DISSOLVED OXYGEN
H2O2	HYDROGEN PEROXIDE
LEAK	LEAK DETECTION
NIT	NITRATES
O2	AMBIENT OXYGEN
ORP	OXIDATION REDUCTION POTENTIAL
pH	HYDROGEN ION CONCENTRATION
TURB	TURBIDITY

GENERAL NOTES

1. THIS IS A GENERAL LEGEND SHEET. CERTAIN SYMBOLS AND ABBREVIATIONS MAY NOT APPLY TO THIS SPECIFIC PROJECT.
2. THIS LEGEND APPLIES TO INSTRUMENTATION DIAGRAMS ONLY AND MAY DIFFER FROM LEGENDS FOR OTHER DISCIPLINES.
3. IN GENERAL THIS LEGEND SHEET AND THE INSTRUMENTATION DIAGRAMS ARE BASED ON INSTRUMENTATION SYSTEMS AND AUTOMATION SOCIETY FOR INSTRUMENTATION PRACTICES. MODIFICATIONS, ADDITIONS AND ALTERATIONS MAY HAVE BEEN MADE AS REQUIRED TO MEET PROJECT REQUIREMENTS.
4. IN THE EVENT OF DISCREPANCIES BETWEEN THE PROCESS AND INSTRUMENTATION DIAGRAMS AND THE SPECIFICATIONS, THE MORE EXPENSIVE SOLUTION OR ALTERNATIVE SHALL BE USED FOR PRICING PURPOSES. THE ENGINEER SHALL MAKE FINAL DETERMINATION OF WHICH SOLUTION TO USE.

RECORD DRAWING

THIS RECORD DRAWING HAS BEEN PREPARED BASED ON A COMBINATION OF INFORMATION PROVIDED BY OTHERS AND BY CDM Smith. THE ENGINEER HAS NOT VERIFIED THE ACCURACY OF ALL THE INFORMATION. TO THE BEST OF THE ENGINEER'S BELIEF AND KNOWLEDGE, THE INCLUDED RECORD INFORMATION IS REASONABLY ACCURATE.

By RAVI SUBRAMANIAN Date JANUARY 2018

CDM Smith

INSTRUMENTATION FUNCTIONAL CODE

	FIRST LETTER		SUCEEDING LETTERS (3)		
	MEASURED OR INDICATING VARIABLE	MODIFIER	READOUT OR PASSIVE FUNCTION	OUTPUT FUNCTION	MODIFIER
A	ANALYSIS		ALARM		
B	BURNER,COMBUSTION		USER'S CHOICE	USER'S CHOICE	USER'S CHOICE
C	CONDUCTIVITY (ELECTRICAL)			CONTROL	
D	DENSITY (MASS) OR SPECIFIC GRAVITY	DIFFERENTIAL			
E	VOLTAGE (EMF)		PRIMARY ELEMENT		
F	FLOW RATE	RATIO (FRACTION)			
G	GAGING (DIMENSIONAL)		GLASS		
H	HAND (MANUALLY INITIATED)				HIGH
I	CURRENT (ELECTRICAL)		INDICATE		
J	POWER	SCAN			
K	TIME OR TIME–SCHEDULE			CONTROL STATION	
L	LEVEL		LIGHT (PILOT)		LOW
M	MOISTURE OR HUMIDITY	MOMENTARY			MIDDLE OR INTERMEDIATE
N	USER'S CHOICE		USER'S CHOICE	USER'S CHOICE	USER'S CHOICE
O	USER'S CHOICE		ORIFICE (RESTRICTION)		
P	PRESSURE OR VACUUM		POINT (TEST CONNECTION)		
Q	QUANTITY OR EVENT	INTERGRATE OR TOTALIZE			
R	RADIATION		RECORD OR PRINT		
S	SPEED OR FREQUENCY	SAFETY		SWITCH	
T	TEMPERATURE			TRANSMIT	
U	MULTIVARIABLE		MULTIFUNCTION	MULTIFUNCTION	MULTIFUNCTION
V	VACUUM			VALVE, DAMPER OR LOUVER	
W	WEIGHT OR FORCE		WELL		
X	UNCLASSIFIED	X AXIS	UNCLASSIFIED	UNCLASSIFIED	UNCLASSIFIED
Y	EVENT,STATE, PRESENCE	Y AXIS		RELAY OR COMPUTE DRIVE, ACTUATE	
Z	POSITION	Z AXIS		(FINAL CONTROL ELEMENT)	

INSTRUMENT LINE SYMBOLS

- ELECTRICAL SIGNAL
- TELEPHONE SIGNAL
- ADN LINE/TELCO
- ELECTROMAGNETIC OR SONIC SIGNAL
- PNEUMATIC SIGNAL
- CAPILLARY TUBE
- HYDRAULIC SUPPLY
- INSTRUMENT SUPPLY OR CONNECTION TO PROCESS
- SCREENED INSTRUMENT LINES INDICATE EXISTING LINES TO REMAIN AS IS (ELECTRIC SIGNAL SHOWN–TYPICAL FOR OTHER SIGNALS)
- SOFTWARE OR DATA LINK SIGNAL
- ES — 120VAC POWER FROM MAIN SCADA CONTROL PANEL UPS
- ES — NON–UPS BACKED 120VAC POWER
- ES — VENDOR ELECTRICAL SOURCE
- IA — INSTRUMENT AIR SOURCE

SIGNAL CONVERTERS

XY — X/X — OUTPUT / INPUT — FUNCTIONAL CODE

- E = VOLTAGE
- F = FREQUENCY
- H = HYDRAULIC
- I = CURRENT
- P = PNEUMATIC
- PF = PULSE FREQUENCY
- PD = PULSE DURATION
- R = RESISTANCE
- √ = SQUARE ROOT EXTRACTION
- Σ = SUM

HAND SWITCHES

HS — XXX — SPECIFIC SWITCH FUNCTION, (TYP)

SELECTOR SWITCH

- AO = AUTO/OFF
- AM = AUTO/MANUAL
- CM = COMPUTER/MANUAL
- CL = COMPUTER/LOCAL
- ES = E–STOP
- FR = FORWARD/REVERSE
- FOR = FORWARD/OFF/REVERSE
- FS = FAST/SLOW
- FOS = FAST/OFF/SLOW
- HOA = HAND/OFF/AUTO
- HOR = HAND/OFF/REMOTE
- LLS = LEAD/LAG/STANDBY
- LOR = LOCAL/OFF/REMOTE
- LOS = LOCKOUT STOP
- LR = LOCAL/REMOTE
- OC = OPEN/CLOSE
- OCA = OPEN/CLOSE/AUTO
- OCR = OPEN/CLOSE/REMOTE
- OO = ON/OFF
- OSC = OPEN/STOP/CLOSE
- S = START
- SS = START/STOP
- SOR = START/OFF/RESET

INSTRUMENTATION TAGGING

XXX / #N

XXX–Y YYY N

- FUNCTIONAL IDENTIFICATION PER ISA STANDARDS AS MODIFIED FOR USE IN THIS CONTRACT (SEE TABLE THIS SHEET)
- SUFFIX TO DIFFERENTIATE MULTIPLE FUNCTIONAL CODES (WHEN REQUIRED)
- LOOP NUMBER
- AREA DESIGNATION
- FUNCTIONAL CODE

EXAMPLE

FI / 101A

FI = FUNCTIONAL CODE = FLOW INDICATOR
101 = LOOP NUMBER
A = FUNCTIONAL SUFFIX CODE
COMPLETE INSTRUMENT TAG NUMBER IS FI–101A

I/O SIGNALS

MEASURED VARIABLE OR OUTPUT FUNCTION FROM INSTRUMENT FUNCTIONAL CODE TABLE.

- ANALOG INPUT (AI)
- ANALOG OUTPUT (AO)
- DIGITAL INPUT (DI)
- X — DIGITAL OUTPUT (DO)
  - BLANK = MAINTAINED (ELECTRICALLY HELD)
  - M = MOMENTARY
  - L = LATCHED (MAGNETICALLY OR MECHANICALLY HELD)

REGISTERED PROFESSIONAL ENGINEER — RAVI SUBRAMANIAN — No. C053679 Exp. 06–30–2019 — CIVIL — STATE OF CALIFORNIA

REV. NO.	DATE	DRWN	CHKD	REMARKS
5	1/2018	MP	AFR	RECORD DRAWING (MODIFIED TO DELINIATE OU1)
4	7/2015	PJR	JTB	RECORD DRAWING (MODIFIED FOR FULL–SCALE SYSTEM)
3	1/2014	PJR	JTB	ISSUED FOR CONSTRUCTION
2	7/12/13	PJR	DDN	REVISED FOR PDR SUBMITTAL
1	10/24/12	PJR	JTB	PDR SUBMITTAL

DESIGNED BY: AFR
DRAWN BY: MP
SHEET CHK'D BY: AFR
CROSS CHK'D BY: JTB
APPROVED BY: RS
DATE: JANUARY 2018

CDM Smith
111 Academy Way, Suite 150
Irvine, California, 92617
Tel: (949) 752-5452

OMEGA CHEMICAL SUPERFUND SITE
OU-1 SOIL VAPOR EXTRACTION SYSTEM
12504 / 12512 EAST WHITTIER BOULEVARD
WHITTIER, CALIFORNIA

PIPING AND INSTRUMENTATION DIAGRAM
LEGEND II

PROJECT NO. 10500–216711
FILE NAME: OU1SVE–I–2.DWG
SHEET NO. I–2

C:\cdmxm\riehlepj\d1476849\I-2 01/16/14 11:22 riehlepj XREFs: IFC-CA-Rovi-S-2015, IFC-CDMS_2234, IFC-ISSUED FOR CONST
©2015 CDM SMITH ALL RIGHTS RESERVED.
REUSE OF DOCUMENTS: THESE DOCUMENTS AND DESIGNS PROVIDED BY PROFESSIONAL SERVICE, INCORPORATED HEREIN, ARE THE PROPERTY OF CDM SMITH AND ARE NOT TO BE USED, IN WHOLE OR PART, FOR ANY OTHER PROJECT WITHOUT THE WRITTEN AUTHORIZATION OF CDM SMITH.

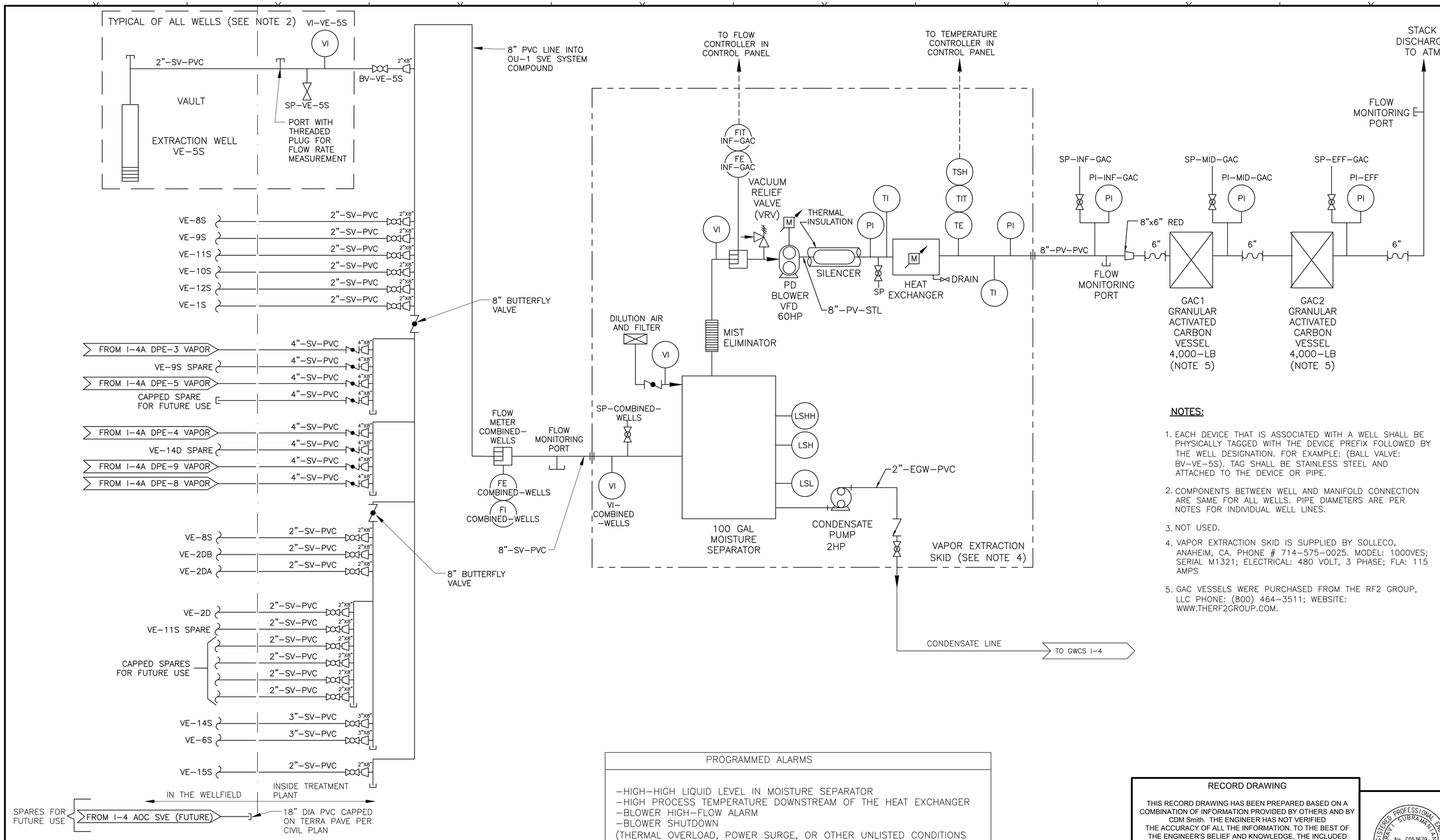

NOTES:

1. EACH DEVICE THAT IS ASSOCIATED WITH A WELL SHALL BE PHYSICALLY TAGGED WITH THE DEVICE PREFIX FOLLOWED BY THE WELL DESIGNATION. FOR EXAMPLE: (BALL VALVE: BV-VE-5S). TAG SHALL BE STAINLESS STEEL AND ATTACHED TO THE DEVICE OR PIPE.
2. COMPONENTS BETWEEN WELL AND MANIFOLD CONNECTION ARE SAME FOR ALL WELLS. PIPE DIAMETERS ARE PER NOTES FOR INDIVIDUAL WELL LINES.
3. NOT USED.
4. VAPOR EXTRACTION SKID IS SUPPLIED BY SOLLECO, ANAHEIM, CA. PHONE # 714-575-0025. MODEL: 1000VES; SERIAL M1321; ELECTRICAL: 480 VOLT, 3 PHASE; FLA: 115 AMPS
5. GAC VESSELS WERE PURCHASED FROM THE RF2 GROUP, LLC PHONE: (800) 464-3511; WEBSITE: WWW.THERF2GROUP.COM.

PROGRAMMED ALARMS
-HIGH-HIGH LIQUID LEVEL IN MOISTURE SEPARATOR -HIGH PROCESS TEMPERATURE DOWNSTREAM OF THE HEAT EXCHANGER -BLOWER HIGH-FLOW ALARM -BLOWER SHUTDOWN (THERMAL OVERLOAD, POWER SURGE, OR OTHER UNLISTED CONDITIONS MAY TRIGGER SYSTEM SHUTDOWN)

REV. NO.	DATE	DRWN	CHKD	REMARKS
12	7/2018	SKM	JTB	RECORD DRAWING (MODIFIED FOR RACCR)
11	3/2018	MP	AFR	RECORD DRAWING (MODIFIED TO DELINIATE OU1)
10	8/2015	PJR	JTB	RECORD DRAWING (MODIFIED FOR FULL-SCALE SYSTEM)
9	4/2014	PJR	JTB	REVISED IFC DRAWING
8	1/2014	PJR	JTB	ISSUED FOR CONSTRUCTION
7	6/25/13	PJR	IL	REVISED FOR PDR SUBMITTAL
6	5/17/13	PJR	DDN	REVISED FOR PDR SUBMITTAL
5	10/24/12	PJR	JTB	PDR SUBMITTAL
4	5/11	JBP	JLD	FOR RECORD DRAWING
3	11/10	MAR	VTB	FOR RECORD DRAWING

DESIGNED BY: AFR
DRAWN BY: MP
SHEET CHK'D BY: AFR
CROSS CHK'D BY: JTB
APPROVED BY: RS
DATE: JULY 2018

CDM Smith
111 Academy Way, Suite 150
Irvine, California, 92617
Tel: (949) 752-5452

OMEGA CHEMICAL SUPERFUND SITE
OU-1 SOIL VAPOR EXTRACTION SYSTEM
12504 / 12512 EAST WHITTIER BOULEVARD
WHITTIER, CALIFORNIA

OU-1 SVE SYSTEM
PIPING AND INSTRUMENTATION DIAGRAM

PROJECT NO. 10500-216711
FILE NAME: OU1SVE-I-4.DWG
SHEET NO. I-4

RECORD DRAWING

THIS RECORD DRAWING HAS BEEN PREPARED BASED ON A COMBINATION OF INFORMATION PROVIDED BY OTHERS AND BY CDM Smith. THE ENGINEER HAS NOT VERIFIED THE ACCURACY OF ALL THE INFORMATION. TO THE BEST OF THE ENGINEER'S BELIEF AND KNOWLEDGE, THE INCLUDED RECORD INFORMATION IS REASONABLY ACCURATE.

By RAVI SUBRAMANIAN Date JULY 2018

CDM Smith

REGISTERED PROFESSIONAL ENGINEER
RAVI SUBRAMANIAN
No. C053679
Exp. 06-30-2019
CIVIL
STATE OF CALIFORNIA

XREFs: [IFC-CA-Ravi-S-2015, CDMS_2234 - (RECORD DRAWING), CA-PE-Ravi-S-2019, RECORD DRAWING-ALT-C (JULY 2018)] Images: (Subramanian)
Last saved by: MALPASSSK Time: 7/31/2018 11:06:12 AM
pw:\\pw.cdmsmith.com:PW_XM1\10500\97160\04 Design Services NM_30%\01 General\10 CADD\01 Working\2015 RECORD DWGS (GWTS & SVE)\SVE SYSTEM (RECORD DRAWING)\OU1SVE-I-4.dwg
© 2015 CDM SMITH ALL RIGHTS RESERVED.
REUSE OF DOCUMENTS: THESE DOCUMENTS AND DESIGNS PROVIDED BY PROFESSIONAL SERVICE, INCORPORATED HEREIN, ARE THE PROPERTY OF CDM SMITH AND ARE NOT TO BE USED, IN WHOLE OR PART, FOR ANY OTHER PROJECT WITHOUT THE WRITTEN AUTHORIZATION OF CDM SMITH.

XREFs: [JFC-CA-Ravi-S-2015, BJF-castamp, CDMS_2234 - (RECORD DRAWING), RECORD DRAWING-ALT-C (AUGUST 2015), CA-PE-Ravi-S-2019, RECORD DRAWING-ALT-C (JULY 2018)] Images: [Subramanian]
Last saved by: MALPASSSK Time: 6/25/2018 1:58:18 PM
pw:\\pw.cdmsmith.com:PW_XAR1\10500\97768\04 Design Services NM_30%\01 General\10 CADD\01 Working\2015 RECORD DWGS (GWTS & SVE)\SVE I-4A.dwg
(RECORD DRAWINGS)\OU1SVE I-4A.dwg
© 2015 CDM SMITH ALL RIGHTS RESERVED.
REUSE OF DOCUMENTS: THESE DOCUMENTS AND DESIGNS PROVIDED BY PROFESSIONAL SERVICE, INCORPORATED HEREIN, ARE THE PROPERTY OF CDM SMITH AND ARE NOT TO BE USED, IN WHOLE OR PART, FOR ANY OTHER PROJECT WITHOUT THE WRITTEN AUTHORIZATION OF CDM SMITH.

HMI/OIT

GWTS PLC

LEVEL LI 331 | AUTO STATUS YI 330 | RUNNING STATUS YI 330 | FAILED STATUS YA 330 | ENABLE PUMP HS 330 | DPE-3 DISCH PRESS PI 334 | DPE-3 HI DISCH PRESS ALARM PAH 334 | DPE-3 FLOW RATE FI 335 | DPE-3 TOTAL FLOW FQI 335 | DPE-3 VAULT HI LEVEL ALARM LAH 333

LY 333

GEMS SENSORS SERIES 3R GENERAL PURPOSE PROBE 3R-X-C-5 (TYP)

NOTE 7

PT 334 | PI 335 | FIT 335 | FE 335 | NOTE 6 | LSH 333 | NOTE 3 (TYP)

1" | CV-330 | 1"X0.5' RED | 0.5"X1" RED | GV-330 | 1" | 1"X2" RED | BV-330A

SAMPLE PORT | 1" UNION PVC

LT 331 | LE 331

PMP-330
DPE WELL 3
(DPE-3)

DOGBONE TERMINATION (TYP AT ALL VAULTS)

2"(4")-EGW-HDPE(HDPE)

TYPICAL FOR DPE-3, DPE-4, DPE-5, DPE-8 AND DPE-9

4"-SV-PVC > VAPOR TO OU-1 SHEET I-4

PMP-340 DPE WELL 4 (DPE-4) — 2"(4")-EGW-HDPE(HDPE) — 4"-SV-PVC > VAPOR TO OU-1 SHEET I-4

PMP-380 DPE WELL 8 (DPE-8) — 2"(4")-EGW-HDPE(HDPE) — 4"-SV-PVC > VAPOR TO OU-1 SHEET I-4

PMP-350 DPE WELL 5 (DPE-5) — 2"(4")-EGW-HDPE(HDPE) — 4"-SV-PVC > VAPOR TO OU-1 SHEET I-4

PMP-390 DPE WELL 9 (DPE-9) — 2"(4")-EGW-HDPE(HDPE) — 4"-SV-PVC > VAPOR TO OU-1 SHEET I-4

NOTES:

1. NOT USED.
2. MCC BUCKET. TYPICAL FOR EW-4, EW-5, DPE-3, DPE-4, DPE-5, DPE-8 AND DPE-9.
3. LEVEL PROBE WARRICK SERIES 3R OR EQUAL. PROVIDE ALL ACCESSORIES AND RELAY REQUIRED FOR INSTALLATION AND OPERATION.
4. SEE CIVIL DRAWINGS FOR ADDITIONAL PIPING DETAILS. SPARE/FUTURE PIPING CONNECTIONS TO CONDENSATE LINE FROM I-4 AOC FUTURE NOT SHOWN FOR CLARITY.
5. CONNECT SECONDARY CONTAINMENT OF NEW PIPING TO SECONDARY CONTAINMENT OF EXISTING PIPING.
6. FLOW TRANSDUCER (FE) SHALL BE SEAMETRICS IP811-S-40 SERIES WITH BUILT-IN 115VAC POWER SUPPLY. FLOW METER SHALL BE ORDERED WITH IMMERSION OPTION/KIT (-50). PROVIDE FLOW TRANSMITTER (FT420-M-65) PREMOUNTED ON THE FLOW ELEMENT.
7. PRESSURE TRANSDUCER (PT) SHALL BE ENDRESS+HAUSER PMC131 OR EQUAL.
8. FOR DETAILS ON GROUNDWATER TREATMENT PLANT, SEE GWCS RECORD DRAWINGS.

LEVEL LI 111 | AUTO STATUS YI 110 | RUNNING STATUS YI 110 | FAILED STATUS YA 110 | ENABLE PUMP HS 110 | SPEED REF. SC 110 | SPEED FDBK SI 110 | EW-1 HI DISCH PRESS ALARM PAH 114 | EW-1 DISCH PRESS PI 114 | EW-1 TOTAL FLOW FQI 115 | EW-1 FLOW RATE FI 115 | EW-1 VAULT HI LEVEL ALARM LAH 113

LY 113 WARRICK RELAY (TYP)

DOGBONE TERMINATION (TYP AT ALL VAULTS)

PT 114 | PI 115 | NOTE 7 | NOTE 6 | FIT 115 | FE 115 | NOTE 3 (TYP) | LSH 113

1.5" | CV-110 | 1.5"X0.5" RED | 0.5"X1.5" RED | GV-110 | BV-110A

SAMPLE PORT | 1.5" UNION PVC

LT 111 | LE 111

PMP-110
EXTR. WELL 1
(EW-1)

TYPICAL FOR EW-1, EW-2 AND EW-3

FROM OU-1 I-4 CONDENSATE AND DPE WELLS EAST OF PUTNAM

2"(4")-EGW-HDPE(HDPE) | 1.5"X1.5"X2" TEE | 2" CV | 2" BV

DOGBONE TERMINATION (TYP AT ALL VAULTS)

PMP-120 EXTR. WELL 2 (EW-2)

PMP-130 EXTR. WELL 3 (EW-3)

PMP-140 EXTR. WELL 4 (EW-4)

LEVEL LI 151 | AUTO STATUS YI 150 | RUNNING STATUS YI 150 | FAILED STATUS YA 150 | ENABLE PUMP HS 150 | EW-5 DISCH PRESS PI 154 | EW-5 HI DISCH PRESS ALARM PAH 154 | EW-5 FLOW RATE FI 155 | EW-5 TOTAL FLOW FQI 155 | EW-5 VAULT HI HI LEVEL ALARM LAHH 153

LY 153

TYPICAL FOR EW-4 AND EW-5

TOTAL INFLUENT FLOW FQI 100

TO FI 125, 135, 145

TO FI 175, 185, 195, 205

INSIDE EW-2 VAULT

1.5"-EGW-PVC

2"(4")-EGW-HDPE(HDPE)

3"(6")-EGW-HDPE(HDPE)

NOTE 7 | NOTE 6 | PT 154 | PI 155 | FIT 155 | FE 155 | NOTE 3 (TYP) | LSHH 153

1.5" | CV-150 | 1.5"X0.5" RED | 1.5"X0.5" RED | GV-150 | BV-150A | 1.5"X3" RED

SAMPLE PORT | 1.5" UNION PVC | SAMPLE PORT

LT 151 | LE 151

PMP-150
EXTR. WELL 5
(EW-5)

3"(6")-EGW-HDPE(HDPE) > TO GWCS I-5

TYPICAL FOR EW-4 AND EW-5

RECORD DRAWING

THIS RECORD DRAWING HAS BEEN PREPARED BASED ON A COMBINATION OF INFORMATION PROVIDED BY OTHERS AND BY CDM Smith. THE ENGINEER HAS NOT VERIFIED THE ACCURACY OF ALL THE INFORMATION. TO THE BEST OF THE ENGINEER'S BELIEF AND KNOWLEDGE, THE INCLUDED RECORD INFORMATION IS REASONABLY ACCURATE.

By RAVI SUBRAMANIAN Date MARCH 2018

CDM Smith

REGISTERED PROFESSIONAL ENGINEER — RAVI SUBRAMANIAN — No. C053679 Exp. 06-30-2019 — CIVIL — STATE OF CALIFORNIA

REV. NO.	DATE	DRWN	CHKD	REMARKS
9	3/2018	MP	AFR	RECORD DRAWING (MODIFIED TO DELINIATE OU1)
8	08/16	MMG	JTB	MODIFIED
7	08/15	CTA	JTB	RECORD DRAWING (MODIFIED FOR FULL-SCALE SYSTEM)
6	4-2014	PJR	JTB	REVISED IFC DRAWING
5	1-2014	PJR	JTB	ISSUED FOR CONSTRUCTION
5	1-2014	PJR	JTB	ISSUED FOR CONSTRUCTION
4	7-12-13	PJR	NLS	REVISED FOR PDR SUBMITTAL

DESIGNED BY: AFR
DRAWN BY: MP
SHEET CHK'D BY: AFR
CROSS CHK'D BY: TCA
APPROVED BY: RS
DATE: MARCH 2018

CDM Smith
111 Academy Way, Suite 150
Irvine, California, 92617
Tel: (949) 752-5452

OMEGA CHEMICAL SUPERFUND SITE
OU-1 SOIL VAPOR EXTRACTION SYSTEM
12504 / 12512 EAST WHITTIER BOULEVARD
WHITTIER, CALIFORNIA

PIPING AND INSTRUMENTION DIAGRAM GROUNDWATER AND DUAL PHASE EXTRACTION WELLS

PROJECT NO. 10500-216711
FILE NAME: OU1SVE-I-4A.DWG

SHEET NO.
I-4A

Appendix D

SCAQMD HRA

Appendix E

Table of Contents

Equipment	Manufacturer	Description
Sentinel Autodialer	Sensaphone	Remote autodialer
Condensate Pump	GOULDS	Centrifugal Pump, Model NPE
Vapor flowmeters	DWYER	Models: DS-300, Series 2000 Magnahelic, and Series MS MAGNESENSE
Heat Exchanger	XCHANGER INC.	Model # AA-1000
Heat Exchanger VFD	Automation Direct	GS2 Series AC Drive
Temperature Controller	Honeywell	Model UDC2500
Heat Exchanger Motor	Leeson	Model #L6EPB-B-S-3-0
Vapor-Liquid Separator Level Switch	DWYER	Flotect
Vapor Conveyance Piping	Spears Manufacturing	Varies
Blower Silencer	Stoddard	Model # D-32
Blower	Solleco	VES-1000 Model #718
Blower VFD	ABB	Model # ACS550-U1-097A-4
Photoionization Detector (PID)	RAE Systems	MiniRAE 3000

SENTINEL

CLOUD BASED MONITORING

INSTALLATION AND SETUP GUIDE

VERSION 2.2

Model: SCD-1200-4GVZCD

SENSAPHONE®

REMOTE MONITORING SOLUTIONS

Every effort has been made to ensure that the information in this document is complete, accurate and up-to-date. Sensaphone assumes no responsibility for the results of errors beyond its control. Sensaphone also cannot guarantee that changes in equipment made by other manufacturers, and referred to in this manual, will not affect the applicability of the information in this manual.

Copyright © 2015 by SENSAPHONE®

First Edition, version 2.2, May 2017

Written and produced by SENSAPHONE®.

Please address comments on this publication to:

SENSAPHONE®

901 Tryens Road

Aston, PA 19014

Important Safety Instructions

Your Sentinel has been carefully designed to give you years of safe, reliable performance. As with all electrical equipment, however, there are a few basic precautions you should take to avoid hurting yourself or damaging the unit:

- Read the installation and operating instructions in this guide carefully. Be sure to save it for future reference.
- Read and follow all warning and instruction labels on the product itself.
- To protect the Sentinel from overheating, make sure all openings on the unit are not blocked. Do not place on or near a heat source, such as a radiator or heat register.
- Do not use your Sentinel near water, or spill liquid of any kind into it.
- Be certain that your power source matches the rating in the specifications of this manual. If you're not sure of the type of power supply to your facility, consult your dealer or local power company.
- Do not allow anything to rest on the power cord. Do not locate this product where the cord will be abused by persons walking on it.
- Do not overload wall outlets and extension cords, as this can result in the risk of fire or electric shock.
- Never push objects of any kind into this product through ventilation holes as they may touch dangerous voltage points or short out parts that could result in a risk of fire or electric shock.
- To reduce the risk of electric shock, do not disassemble this product, but return it to Sensaphone Customer Service, or another approved repair facility, when any service or repair work is required. Opening or removing covers may expose you to dangerous voltages or other risks. Incorrect reassembly can cause electric shock when the unit is subsequently used.
- If anything happens that indicates that your Sentinel is not working properly or has been damaged, unplug it immediately and follow the procedures in the manual for having it serviced. Return the unit for servicing under the following conditions:

    1. The power cord or plug is frayed or damaged.
    2. Liquid has been spilled into the product or it has been exposed to water.
    3. The unit has been dropped, or the enclosure is damaged.
    4. The unit doesn't function normally when you're following the operating instructions.

- To reduce the risk of fire or injury to persons, read and follow these instructions:

    1. Use only the specified type and size battery.
    2. Do not dispose of the battery in a fire. The cell may explode. Check with local codes for possible special disposal instructions.
    3. Do not open or mutilate batteries. Released electrolyte is corrosive and may cause damage to the eyes or skin. It may be toxic if swallowed.
    4. Exercise care in handling batteries in order not to short the battery with conducting materials such as rings, bracelets, and keys. The battery or conductor may overheat and cause burns.
    5. Remove main power connections before replacing the battery.

FCC Requirements

Part 15: This equipment has been tested and found to comply with the limits for a Class A digital device, pursuant to Part 15 of the FCC Rules. These limits are designed to provide reasonable protection against harmful interference when the equipment is operated in a commercial environment. This equipment generates, uses and can radiate radio frequency energy and, if not installed and used in accordance with the instructions, may cause harmful interference to radio communications. Operation of this equipment in a residential area is likely to cause harmful interference in which case the user will be required to correct the interference at his own expense.

2 YEAR LIMITED WARRANTY

PLEASE READ THIS WARRANTY CAREFULLY BEFORE USING THE PRODUCT.

THIS LIMITED WARRANTY CONTAINS SENSAPHONE'S STANDARD TERMS AND CONDITIONS. WHERE PERMITTED BY THE APPLICABLE LAW, BY KEEPING YOUR SENSAPHONE PRODUCT BEYOND THIRTY (30) DAYS AFTER THE DATE OF DELIVERY, YOU FULLY ACCEPT THE TERMS AND CONDITIONS SET FORTH IN THIS LIMITED WARRANTY.

IN ADDITION, WHERE PERMITTED BY THE APPLICABLE LAW, YOUR INSTALLATION AND/OR USE OF THE PRODUCT CONSTITUTES FULL ACCEPTANCE OF THE TERMS AND CONDITIONS OF THIS LIMITED WARRANTY (HEREINAFTER REFERRED TO AS "LIMITED WARRANTY OR WARRANTY"). IF YOU DO NOT AGREE TO THE TERMS AND CONDITIONS THIS WARRANTY, INCLUDING ANY LIMITATIONS OF WARRANTY, INDEMNIFICATION TERMS OR LIMITATION OF LIABILITY, THEN YOU SHOULD NOT USE THE PRODUCT AND SHOULD RETURN IT TO THE SELLER FOR A REFUND OF THE PURCHASE PRICE. THE LAW MAY VARY BY JURISDICTION AS TO THE APPLICABILITY OF YOUR INSTALLATION OR USE ACTUALLY CONSTITUTING ACCEPTANCE OF THE TERMS AND CONDITIONS HEREIN AND AS TO THE APPLICABILITY OF ANY LIMITATION OF WARRANTY, INDEMNIFICATION TERMS OR LIMITATIONS OF LIABILITY.

1. **WARRANTOR**: IN THIS WARRANTY, WARRANTOR SHALL MEAN "DEALER, DISTRIBUTOR, AND/OR MANUFACTURER."

2. **ELEMENTS OF WARRANTY**: THIS PRODUCT IS WARRANTED TO BE FREE FROM DEFECTS IN MATERIALS AND CRAFTSMANSHIP WITH ONLY THE LIMITATIONS AND EXCLUSIONS SET OUT BELOW.

3. **WARRANTY AND REMEDY**: TWO-YEAR WARRANTY — IN THE EVENT THAT THE PRODUCT DOES NOT CONFORM TO THIS WARRANTY AT ANY TIME DURING THE TIME OF TWO YEARS FROM ORIGINAL PURCHASE, WARRANTOR WILL REPAIR THE DEFECT AND RETURN IT TO YOU AT NO CHARGE.

THIS WARRANTY SHALL TERMINATE AND BE OF NO FURTHER EFFECT AT THE TIME THE PRODUCT IS: (1) DAMAGED BY EXTRANEOUS CAUSE SUCH AS FIRE, WATER, LIGHTNING, ETC. OR NOT MAINTAINED AS REASONABLE AND NECESSARY; OR (2) MODIFIED; OR (3) IMPROPERLY INSTALLED; OR (4) MISUSED; OR (5) REPAIRED OR SERVICED BY SOMEONE OTHER THAN WARRANTORS' AUTHORIZED PERSONNEL OR SOMEONE EXPRESSLY AUTHORIZED BY WARRANTOR'S TO MAKE SUCH SERVICE OR REPAIRS; (6) USED IN A MANNER OR PURPOSE FOR WHICH THE PRODUCT WAS NOT INTENDED; OR (7) SOLD BY ORIGINAL PURCHASER.

LIMITED WARRANTY, LIMITATION OF DAMAGES AND DISCLAIMER OF LIABILITY FOR DAMAGES: THE WARRANTOR'S OBLIGATION UNDER THIS WARRANTY IS LIMITED TO REPAIR OR REPLACEMENT OF THE PRODUCT, AT THE WARRANTOR'S OPTION AS TO REPAIR OR REPLACEMENT. IN NO EVENT SHALL WARRANTORS BE LIABLE OR RESPONSIBLE FOR PAYMENT OF ANY INCIDENTAL, CONSEQUENTIAL, SPECIAL AND/OR PUNITIVE DAMAGES OF ANY KIND, INCLUDING BUT NOT LIMITED TO ANY LABOR COSTS, PRODUCT COSTS, LOST REVENUE, BUSINESS INTERRUPTION LOSSES, LOST PROFITS, LOSS OF BUSINESS, LOSS OF DATA OR INFORMATION, OR FINANCIAL LOSS, FOR CLAIMS OF ANY NATURE, INCLUDING BUT NOT LIMITED TO CLAIMS IN CONTRACT, BREACH OF WARRANTY OR TORT, AND WHETHER OR NOT CAUSED BY WARRANTORS' NEGLIGENCE. IN THE EVENT THAT IT IS DETERMINED IN ANY ADJUDICATION THAT THE LIMITED WARRANTIES OF REPAIR OR REPLACEMENT ARE INAPPLICABLE, THEN THE PURCHASER'S SOLE REMEDY SHALL BE PAYMENT TO THE PURCHASER OF THE ORIGINAL COST OF THE PRODUCT, AND IN NO EVENT SHALL WARRANTORS BE LIABLE OR RESPONSIBLE FOR PAYMENT OF ANY INCIDENTAL, CONSEQUENTIAL, SPECIAL AND/OR PUNITIVE DAMAGES OF ANY KIND, INCLUDING BUT NOT LIMITED TO ANY LOST REVENUE, BUSINESS INTERRUPTION LOSSES, LOST PROFITS, LOSS OF BUSINESS, LOSS OF DATA OR INFORMATION, OR FINANCIAL LOSS, FOR CLAIMS OF ANY NATURE, INCLUDING BUT NOT LIMITED TO CLAIMS IN CONTRACT, BREACH OF WARRANTY OR TORT, AND WHETHER OR NOT CAUSED BY

WARRANTORS' NEGLIGENCE.

WITHOUT WAIVING ANY PROVISION IN THIS LIMITED WARRANTY, IF A CIRCUMSTANCE ARISES WHERE WARRANTORS ARE FOUND TO BE LIABLE FOR ANY LOSS OR DAMAGE ARISING OUT OF MISTAKES, NEGLIGENCE, OMISSIONS, INTERRUPTIONS, DELAYS, ERRORS OR DEFECTS IN WARRANTORS' PRODUCTS OR SERVICES, SUCH LIABILITY SHALL NOT EXCEED THE TOTAL AMOUNT PAID BY THE CUSTOMER FOR WARRANTORS' PRODUCT AND SERVICES OR $250.00, WHICHEVER IS GREATER. YOU HEREBY RELEASE WARRANTORS FROM ANY AND ALL OBLIGATIONS, LIABILITIES AND CLAIMS IN EXCESS OF THIS LIMITATION.

INDEMNIFICATION AND COVENANT NOT TO SUE: YOU WILL INDEMNIFY, DEFEND AND HOLD HARMLESS WARRANTORS, THEIR OWNERS, DIRECTORS, OFFICERS, EMPLOYEES, AGENTS, SUPPLIERS OR AFFILIATED COMPANIES, AGAINST ANY AND ALL CLAIMS, DEMANDS OR ACTIONS BASED UPON ANY LOSSES, LIABILITIES, DAMAGES OR COSTS, INCLUDING BUT NOT LIMITED TO DAMAGES THAT ARE DIRECT OR INDIRECT, INCIDENTAL, SPECIAL OR CONSEQUENTIAL, AND INCLUDING ATTORNEYS FEES AND LEGAL COSTS, THAT MAY RESULT FROM THE INSTALLATION, OPERATION, USE OF, OR INABILITY TO USE WARRANTORS' PRODUCTS AND SERVICES, OR FROM THE FAILURE OF THE WARRANTORS' SYSTEM TO REPORT A GIVEN EVENT OR CONDITION, WHETHER OR NOT CAUSED BY WARRANTORS' NEGLIGENCE.

YOU AGREE TO RELEASE, WAIVE, DISCHARGE AND COVENANT NOT TO SUE WARRANTORS, THEIR OWNERS, DIRECTORS, OFFICERS, EMPLOYEES, AGENTS, SUPPLIERS OR AFFILIATED COMPANIES, FOR ANY AND ALL LIABILITIES POTENTIALLY ARISING FROM ANY CLAIM, DEMAND OR ACTION BASED UPON ANY LOSSES, LIABILITIES, DAMAGES OR COSTS, INCLUDING BUT NOT LIMITED TO DAMAGES THAT ARE DIRECT OR INDIRECT, INCIDENTAL, SPECIAL OR CONSEQUENTIAL, AND INCLUDING ATTORNEYS FEES AND LEGAL COSTS, THAT MAY RESULT FROM THE INSTALLATION, OPERATION, USE OF, OR INABILITY TO USE WARRANTORS' PRODUCTS AND SERVICES, OR FROM THE FAILURE OF THE WARRANTORS' SYSTEM TO REPORT A GIVEN EVENT OR CONDITION, WHETHER OR NOT CAUSED BY WARRANTORS' NEGLIGENCE, EXCEPT AS NECESSARY TO ENFORCE THE EXPRESS TERMS OF THIS LIMITED WARRANTY.

EXCLUSIVE WARRANTY: THE LIMITED WARRANTY OR WARRANTIES DESCRIBED HEREIN CONSTITUTE THE SOLE WARRANTY OR WARRANTIES TO THE PURCHASER. ALL IMPLIED WARRANTIES ARE EXPRESSLY DISCLAIMED, INCLUDING: THE WARRANTY OF MERCHANTABILITY AND THE WARRANTY OF FITNESS FOR A PARTICULAR USE AND THE WARRANTY OF FITNESS FOR A

PARTICULAR PURPOSE AND THE WARRANTY OF NON-INFRINGEMENT AND/OR ANY WARRANTY ARISING FROM A COURSE OF DEALING, USAGE, OR TRADE PRACTICE.

IT MUST BE CLEAR THAT THE WARRANTORS ARE NOT INSURING YOUR PREMISES OR BUSINESS OR GUARANTEEING THAT THERE WILL NOT BE DAMAGE TO YOUR PERSON OR PROPERTY OR BUSINESS IF YOU USE THIS PRODUCT. YOU SHOULD MAINTAIN INSURANCE COVERAGE SUFFICIENT TO PROVIDE COMPENSATION FOR ANY LOSS, DAMAGE, OR EXPENSE THAT MAY ARISE IN CONNECTION WITH THE USE OF PRODUCTS OR SERVICES, EVEN IF CAUSED BY WARRANTORS' NEGLIGENCE. THE WARRANTORS ASSUME NO LIABILITY FOR INSTALLATION OF THE PRODUCT AND/OR INTERRUPTIONS OF THE SERVICE DUE TO STRIKES, RIOTS, FLOODS, FIRE, AND/OR ANY CAUSE BEYOND SELLER'S CONTROL, FURTHER SUBJECT TO THE LIMITATIONS EXPRESSED IN ANY LICENSE AGREEMENT OR OTHER AGREEMENT PROVIDED BY WARRANTORS TO PURCHASER.

THE AGREEMENT BETWEEN THE WARRANTORS AND THE PURCHASER, INCLUDING BUT NOT LIMITED TO THE TERMS AND CONDITIONS HEREIN SHALL NOT BE GOVERNED BY THE CONVENTION FOR THE INTERNATIONAL SALE OF GOODS. WHERE APPLICABLE, THE UNIFORM COMMERCIAL CODE AS ADOPTED BY THE STATE OF DELAWARE SHALL APPLY.

4. **PROCEDURE FOR OBTAINING PERFORMANCE OF WARRANTY**: IN THE EVENT THAT THE PRODUCT DOES NOT CONFORM TO THIS WARRANTY, THE PRODUCT SHOULD BE SHIPPED OR DELIVERED FREIGHT PREPAID TO A WARRANTOR WITH EVIDENCE OF ORIGINAL PURCHASE.

5. **LEGAL REMEDIES AND DISCLAIMER**: SOME JURISDICTIONS MAY NOT ALLOW, OR MAY PLACE LIMITS UPON, THE EXCLUSION AND/OR LIMITATION OF IMPLIED WARRANTIES, INCIDENTAL DAMAGES AND/OR CONSEQUENTIAL DAMAGES FOR SOME TYPES OF GOODS OR PRODUCTS SOLD TO CONSUMERS AND/OR THE USE OF INDEMNIFICATION TERMS. THUS, THE EXCLUSIONS, INDEMNIFICATION TERMS AND LIMITATIONS SET OUT ABOVE MAY NOT APPLY, OR MAY BE LIMITED IN THEIR APPLICATION, TO YOU. IF THE IMPLIED WARRANTIES CAN NOT BE EXCLUDED, AND THE APPLICABLE LAW PERMITS LIMITING THE DURATION OF IMPLIED WARRANTIES, THEN THE IMPLIED WARRANTIES HEREIN ARE TO BE LIMITED TO THE SAME DURATION AS THE APPLICABLE WRITTEN WARRANTY OR WARRANTIES HEREIN. THE WARRANTY OR WARRANTIES HEREIN MAY GIVE YOU SPECIFIC LEGAL RIGHTS THAT WILL DEPEND UPON THE APPLICABLE LAW. YOU MAY ALSO HAVE OTHER LEGAL RIGHTS DEPENDING UPON THE LAW IN YOUR JURISDICTION.

6. **CHOICE OF FORUM AND CHOICE OF LAW**: IN THE EVENT THAT A DISPUTE ARISES OUT OF OR IN CONNECTION WITH THIS LIMITED WARRANTY, THEN ANY CLAIMS OR SUITS OF ANY KIND CONCERNING SUCH DISPUTES SHALL ONLY AND EXCLUSIVELY BE BROUGHT IN EITHER THE COURT OF COMMON PLEAS OF DELAWARE COUNTY, PENNSYLVANIA OR THE UNITED STATES DISTRICT COURT FOR THE EASTERN DISTRICT OF PENNSYLVANIA.

REGARDLESS OF THE PLACE OF CONTRACTING OR PERFORMANCE, THIS LIMITED WARRANTY AND ALL QUESTIONS RELATING TO ITS VALIDITY, INTERPRETATION, PERFORMANCE AND ENFORCEMENT SHALL BE GOVERNED BY AND CONSTRUED IN ACCORDANCE WITH THE LAWS OF THE STATE OF DELAWARE, WITHOUT REGARD TO THE PRINCIPLES OF CONFLICTS OF LAW.

Effective date 02/25/2015

PHONETICS, INC. d.b.a. SENSAPHONE

901 Tryens Road

Aston, PA 19014
Phone: 610.558.2700 Fax: 610.558.0222
www.sensaphone.com

TABLE OF CONTENTS

CHAPTER 1: INSTALLATION 9

INTRODUCTION 9

FEATURES 9
TECHNICAL SUPPORT 9

ABOUT THIS MANUAL 9

INSTALLATION AND CONFIGURATION 10

PHYSICAL DESCRIPTION 10
LAYOUT 10
RJ-45 10/100BASE-T ETHERNET PORT 10
SENSOR INPUTS 10
POWER ON LED (GREEN) 10
ALARM LEDS (RED) 10
ONLINE LED (GREEN) 10
STANDBY LED (YELLOW) 10
ACKNOWLEDGE/ STANDBY BUTTON 11

INSTALLATION 11

PARTS REQUIRED 11
OPERATING ENVIRONMENT 11
POWER 11
NETWORK CONFIGURATION 11
WALL MOUNT INSTALLATION 12

CONNECTING SENSORS 12

GENERAL WIRING CONSIDERATIONS 12
NORMALLY OPEN / NORMALLY CLOSED DRY CONTACTS 13
2.8K/10K TEMPERATURE SENSORS 14
4–20MA CURRENT LOOP TRANSDUCERS 14
RELAY OUTPUT WIRING 15
BATTERY BACKUP 15
MEMORY/CLOCK BATTERY 15
RESETTING THE SENTINEL TO FACTORY DEFAULT SETTINGS 16

CHAPTER 2: SET UP 17

DESCRIPTION OF WEB PAGES 17

DASHBOARD 17
STANDBY MODE 18
DEVICE DETAILS 18
CONFIGURE DEVICE 19
ZONE PARAMETER DEFINITIONS 20
MANAGE USERS 21
MANAGE USER GROUPS 23
ALARM DELIVERY 23
LOGS 25
DEVICE MANAGEMENT 25
DEVICE GROUPS 26

CHAPTER 3: CONFIGURING THE RELAY OUTPUT 27
RELAY OUTPUT WIRING 28
APPENDIX A: WEEKLY TESTING PROCEDURE 29
APPENDIX B: ACCESSORIES 30
APPENDIX C: SPECIFICATIONS 31
ALERT ZONES 31
RELAY OUTPUT 31
DATA LOGGING 31
COMMUNICATION TYPE: 31
POWER SUPPLY 31
BATTERY BACKUP 32
ENVIRONMENTAL 32
PHYSICAL 32
APPENDIX D: THERMISTORS 33
2.8K THERMISTOR DATA 33
10K THERMISTOR DATA 33
APPENDIX E: RETURNING THE UNIT FOR REPAIR 34
APPENDIX F: TEST LOG 35

CHAPTER 1: INSTALLATION

INTRODUCTION

Congratulations on your purchase of the Sentinel Monitoring System. The system is designed to be an easy, cost–effective, cloud–based monitoring and data logging system to notify you when equipment or conditions go awry. The internet browser–based programming makes the device easy to use from any computer or tablet. Monitored conditions can include temperature, humidity levels, pressure, flow, leak detection, UPS systems, and more. The system allows multiple users to be notified immediately of any detected problems. Notification can occur via voice call, e–mail or SMS (text message), however voice calls and text messages require a premium subscription plan. The internal battery backup system insures the unit will continue to run if main power fails.

FEATURES

The Sentinel includes the following key features:

- Twelve sensor inputs to monitor environmental conditions and/or alarm contacts from other equipment.
- 10/100BASE-T Ethernet port.
- Battery backup for uninterrupted performance.
- Compact design allows wall-mount or weatherproof installation.
- Notification via e–mail, text message (optional) and voice call (optional).
- Relay output capable of automatic or manual control.
- Cloud–based user interface for programming, data storage, and alarm delivery.
- Available in optional weatherproof NEMA 4X enclosure
- Available with cellular modem in weatherproof NEMA 4X enclosure

TECHNICAL SUPPORT

If any questions arise upon installation or operation of the Sentinel, please contact the Sensaphone Technical Service Department at 610.558.2700 and have the following information available:

- Date of purchase _____
- Serial number _____

Technical support is available from 8:00 AM to 5:00 PM, M-F, eastern time.

ABOUT THIS MANUAL

This manual comprises the instructions necessary to install and setup the Sentinel. You should thoroughly read this manual to establish a basic understanding of the system and keep it as a reference.

INSTALLATION AND CONFIGURATION

PHYSICAL DESCRIPTION

The Sentinel is housed in a 5.5” x 5.5” x 1.5” enclosure, which can be easily mounted on a wall or back panel.

LAYOUT

The Sentinel has connections for twelve sensor inputs, an Ethernet port, and 12VDC power. See figure below:

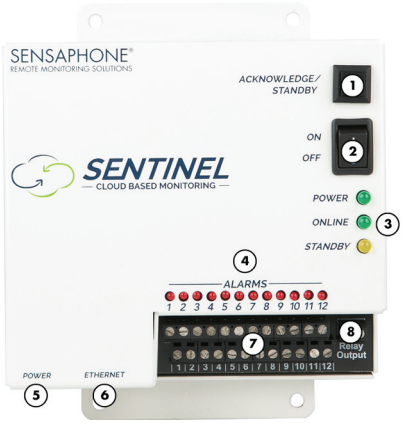

Figure 1: Front Panel Layout of the Sentinel

1) Acknowledge/Standby Button
2) On/Off Switch
3) Power, Online, Standby LEDs
4) Alarm LEDs
5) Power Jack
6) Ethernet Jack
7) Sensor Input Terminal Strip
8) Relay Output Input

RJ-45 10/100BASE-T ETHERNET PORT

This jack is for connecting to your network so that the device can communicate with the Sentinel servers. Two LEDs indicate when the Sentinel has a valid link (green) and transmitted/received data (yellow).

SENSOR INPUTS

The sensor inputs labeled zones 1-12 are designed to interface with normally open/normally closed devices, 2.8K or 10K temperature sensors and 4-20mA transducers.

POWER ON LED (GREEN)

This light indicates that the Sentinel unit is powered and operational.

ALARM LEDS (RED)

The Alarm LEDs indicate if an alarm exists.

ONLINE LED (GREEN)

This light indicates that the Sentinel unit is communicating with the Sentinel servers.

STANDBY LED (YELLOW)

This light indicates that the Sentinel unit is in standby mode.

ACKNOWLEDGE/ STANDBY BUTTON

When an unacknowledged alarm exists (as indicated by a blinking red alarm LED), briefly press the button and the alarm LED will stop blinking, indicating that the alarm is acknowledged. To enter Standby mode, press and hold the button for at least 5 seconds until the Standby LED lights up, then release. To exit from Standby mode, hold the button down for 5 seconds until the Standby LED turns off.

INSTALLATION

This section provides information on:

- Operating environment
- Installation
- Connecting sensors
- Network Configuration

PARTS REQUIRED

- Screwdriver and #8 screws
- Network Hub, Switch, or Router that supports 10 or 100 BASE-T with Internet access
- Computer w/Internet Connection

OPERATING ENVIRONMENT

Before you install the Sentinel be sure that your operating environment meets the physical requirements of the equipment.

Operating Temperature:	32º – 122º Fahrenheit (0º – 50º C)
Humidity:	5 – 90 %RH, non-condensing
Power:	115VAC 50/60 Hz outlet within 6’

POWER

Connect the included DC power supply to the power jack on the Sentinel and then plug the power adapter into a 115V AC power outlet.

NETWORK CONFIGURATION

The Sentinel requires an Internet connection to operate. Using the included network cable, connect the Sentinel to your 10/100 network hub, switch, or router. Note that your network must support DHCP for initial configuration. You can change it to a Static IP later if required (see chapter 2). The green ONLINE LED should light up within a few minutes indicating that the device has connected to the Sensaphone.net servers.

> Technical Info: The Sentinel communicates over port 443 (the standard TCP port that is used for websites which use SSL encryption), so this must be open for outbound communication. The device also makes use of port 123 for clock synchronization (NTP), so this must be open for UDP outbound.

WALL MOUNT INSTALLATION

The Sentinel can be wall mounted using dry wall anchors and (4) #8 screws. Follow the steps below:

1) Install four drywall anchors (if necessary). Attach the Sentinel using four #8 tapping screws. See Figure 2 for dimensions.

2) Attach sensors to the zone terminals.

3) Plug the power adaptor into a 115VAC 50/60Hz outlet.

4) Connect a CAT5 cable to the Ethernet port and connect to a 10/100 network hub, switch or router.

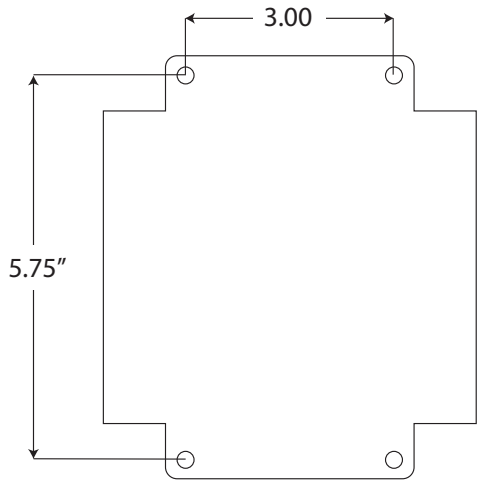

Figure 2: Sentinel mounting dimensions

CONNECTING SENSORS

The Sentinel is compatible with a wide variety of sensors including normally open/normally closed contacts, 2.8K and 10K temperature sensors, and 4–20mA current sources. Compatible sensors and accessories are shown on the Sentinel website. Sensors may be connected while the device is powered on or off. A proper size screwdriver is provided for your convenience. Contact Sensaphone or your Sensaphone reseller for assistance in selecting sensors for your monitoring requirements. A list of sensors and accessories is shown in Appendix B. Follow the instructions below to properly wire and configure the inputs for each type of electrical signal.

> **Warning**: The inputs are designed to work with low voltage signals. DO NOT connect voltages greater than 3.3V to the inputs. DO NOT connect 120VAC to the inputs.

GENERAL WIRING CONSIDERATIONS

Most dry contact sensors can be connected to the Sentinel using inexpensive 2-conductor twisted-pair cable as small as #24 AWG. For temperature and 4–20mA sensors, use the wire chart below as a reference for selecting the appropriate wire gauge. Note that if the sensor is located far from the unit or if you are running cable in an electrically noisy environment, you should seriously consider using shielded cable. This will shield the signal from electrical interference, thereby preventing false readings and/or damage to the unit. For your convenience, Sensaphone has 22 gauge shielded cable available in 50' lengths (part number FGD-0010). To minimize electrical noise coupling between sensor wires and other wiring, follow the guidelines listed below:

- Route the power supply and network cables to the unit by a separate path then the wiring to the sensor inputs. Where paths must cross, their intersection should be perpendicular.
- Do not run sensor wiring and AC power in the same conduit.
- Segregate wiring by signal type. Bundle wiring with similar electrical characteristics together.
- If shielded cable is used, tie the shield to the input ground terminal.

Wiring Distance	Minimum Wire Gauge
700’	#24 AWG
1500’	#22 AWG
2500’	#20 AWG

The zone terminal strip has an upper and lower level for connecting up to 12 sensors. The lower level terminals are all “ground” and are electrically connected together. The upper terminal strip is the positive connection for each sensor. See illustration below.

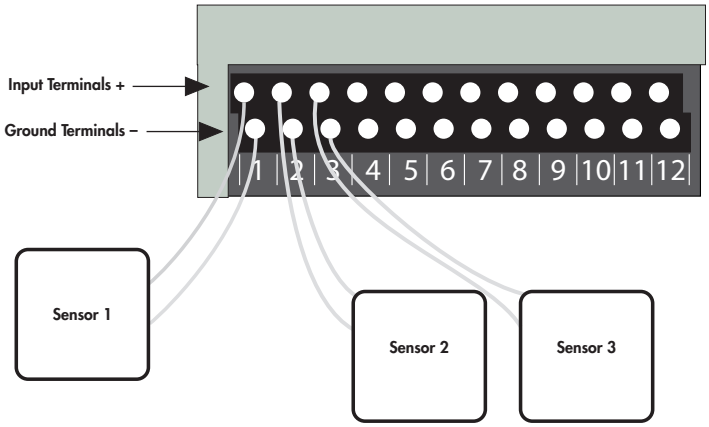

NORMALLY OPEN / NORMALLY CLOSED DRY CONTACTS

Dry contact sources consist of alarm relays or switches that are isolated and have no external voltage applied. These devices can be connected directly to the zone terminals without regard for polarity. Choose a zone and connect the wires to the corresponding screw terminals for that zone. The following figure shows how to connect a dry contact sensor:

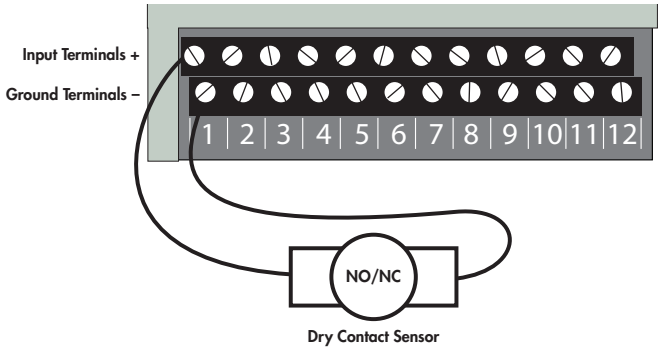

Wiring a Dry Contact Sensor

2.8K/10K TEMPERATURE SENSORS

The Sentinel is compatible with 2.8K/10K temperature sensors that match the curve data listed in the tables in Appendix D. The monitoring temperature range of the 2.8K thermistor is -109 to 115ºF (-85º to 57ºC) and the 10K thermistor is -87° to 168°F (-66° to 76°C). Temperature sensors can be connected directly to the zone terminals without regard for polarity. Choose an alarm input and connect the wires to the corresponding screw terminals for that zone. 2.8K and 10K temperature sensors are available from Sensaphone. See Appendix B for part numbers. The figure below shows how to connect a temperature sensor:

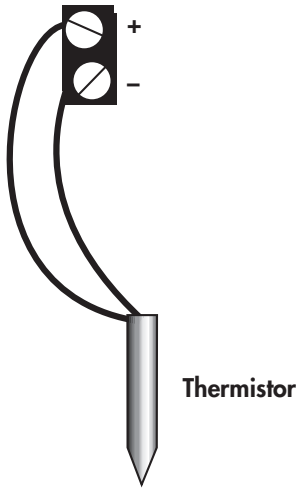

Wiring a Temperature Sensor

4–20MA CURRENT LOOP TRANSDUCERS

The inputs on the Sentinel are compatible with transducers that produce an analog output current of 4 to 20mA. Such transducers are available to measure tank and well levels, extreme temperatures, air pressure, water pressure, flow, voltage, current, rotational speed, etc. Contact our technical support department for assistance regarding your monitoring requirements (877-373-2700 or support@sensaphone.com). Follow the wiring diagrams below for connecting a 4–20mA device:

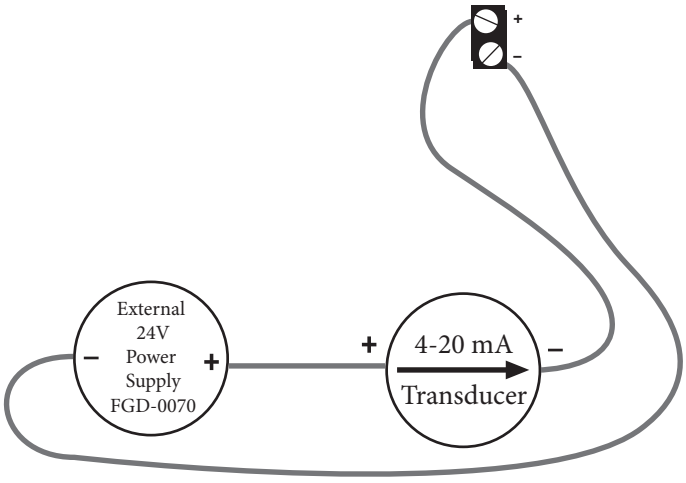

Wiring a 4–20mA device using an external 24 VDC supply.

RELAY OUTPUT WIRING

The Sentinel includes a relay output (switch) that can be used to turn on a light, siren, or other device whenever an alarm occurs. The output is a normally–open (i.e. off) dry contact that can be used for low voltage switching. The relay is rated for up to 30VAC/VDC 1 Amp. A sample wiring diagram is shown below:

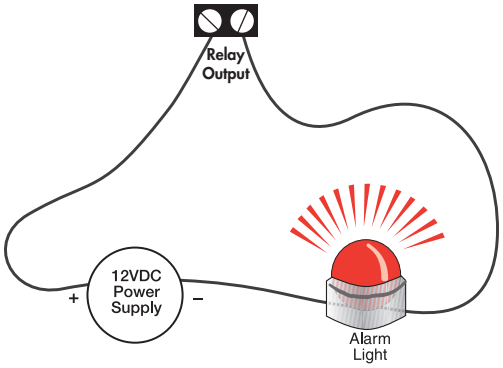

The relay can be controlled manually (via the website or App) or automatically based on specific inputs or alarms. See chapter 3 for details.

BATTERY BACKUP

The Sentinel has an internal rechargeable battery backup pack (part #BAT-0032) which will provide up to 8 hours of backup time in the event of a power failure. The unit will charge the battery and monitor its charge level. The percent charge can be viewed on the website. The Sentinel contains circuitry to protect the battery from deep discharge damage and will disconnect the battery when all of its available energy has been expended. The battery backup module should last 4 to 5 years.

MEMORY/CLOCK BATTERY

The Sentinel contains a CR2 lithium battery to backup certain values in SRAM memory as well as the real-time clock. This battery should last between 5-10 years depending on how much time the device is powered off. {Note: Units manufactured prior to May 2016 contain a CR2032 lithium coin cell which has an estimated life of 2 - 5 yrs}.

RESETTING THE SENTINEL TO FACTORY DEFAULT SETTINGS

In the event that you can no longer connect to your Sentinel, you can reset the unit to factory defaults. On the bottom of the unit is a small hole. Beneath the hole is a push button. Insert a paper clip or similar item into the hole and push the button for 5 seconds while the device is powered on. The Sentinel will erase all of its programming and then reboot automatically. Alternatively you can also reset the device to defaults from the Sensaphone.net website. Go to the Manage Devices page, under the Admin menu. Select the device, choose Reset to Default Values from the drop down, and click Submit.

CHAPTER 2: SET UP

When your Sentinel "Online" LED is lit you can continue with the following website section.

1. Open an internet browser and go to www.sensaphone.net.
2. Fill in the form to create a new account.

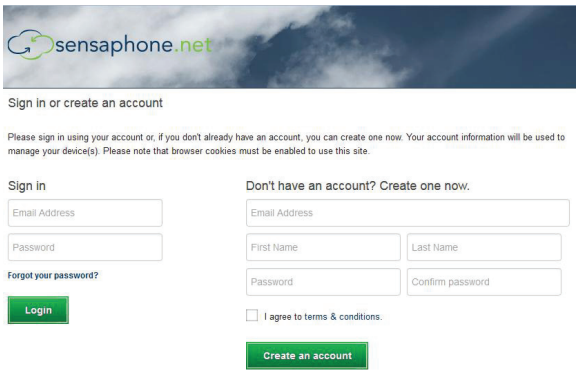

3. Once you are logged in, click *Admin*, then *Manage Devices*. In the "Add a Device" section, enter the Serial Number of your Sentinel and enter a device name. Click the *Add Device* button when finished.

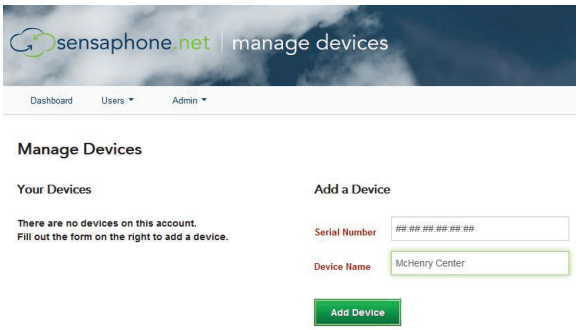

Your Sentinel is now online with the Sensaphone.net website. Read the section below to learn how to view status and program your device.

DESCRIPTION OF WEB PAGES

DASHBOARD

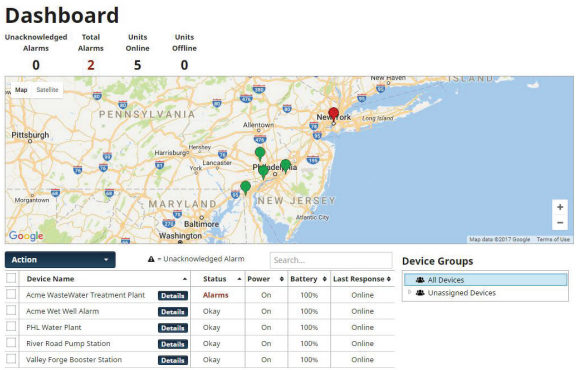

The dashboard will list all of the devices on your account. This page is automatically updated with the most current information available.

The numbers at the top will show how many Unacknowledged Alarms, Current Alarms, Units Online, and Units Offline that currently exist for all devices on your account.

The map will show the location of any device on your account that has an address or GPS location listed. You can hover over the icon to see the device name and status. If the icon for the device is green, your device status is OK. If it is red, your device has alarms. You can click on the icon to show the zones for the selected device.

The device table will display all devices on your account. Click on the *Details* button to display and configure the zones for that device. You can also use the search box above the table to search through the table, or click on the table column headers to sort the data.

Device Name – The name of the device

Status – The current status of the device (Okay, Alarms, Offline, or Standby) If the device has any unacknowledged alarms, a symbol will be displayed in this column

Power – Displays if the device is On or Off (--- will display if the device is offline)

Battery – The current percentage of the device battery (--- will display if the device is offline)

Last Response – The time that the device last connected to the server

STANDBY MODE

Standby mode puts the Sentinel in a temporary state such that no alarms will be detected, allowing onsite personnel to perform maintenance or other tasks that may have triggered an alarm otherwise. Standby mode can be entered using the Action drop down on the Dashboard page or via the pushbutton on the front of the unit. Standby mode will persist for the duration of time entered on the Device Configure screen and will automatically exit once the time expires. When using the pushbutton you must depress the button for 5 seconds. The Standby LED will light up to indicate that the device is in Standby mode. You can also exit Standby mode using the same methods.

Standby – Allows you to put the selected devices into Standby mode

Enter – Put the Sentinel in Standby mode for the length of time that is set on the Device Configure page

Enter (Untimed) – Put the Sentinel in Standby mode until you disable it

Exit – Take the device out of Standby mode

DEVICE DETAILS

The device details page displays the sensor values for your Sentinel. This page is automatically updated with the most current information available. At the top of the page are buttons to access the *Configuration*, *Alarm Delivery* and *Logs*.

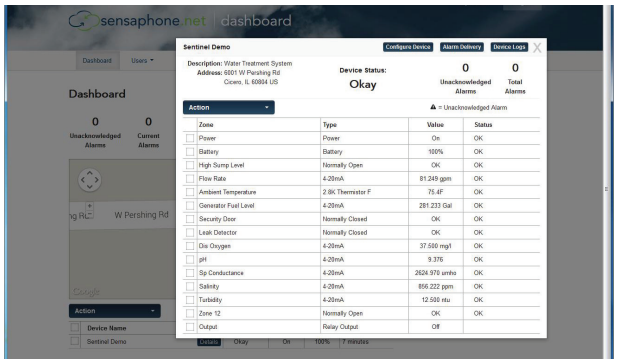

At the top of the page, you will see the device name, description, address and alarm status.

You will also see all of the zones for your device in the table.

Zone – The name of the zone

Value – The current value of the zone

Status – The current status of the zone

Min/Max – Displays the highest and lowest values recorded

If the device has any unacknowledged alarms, a symbol will be displayed in the status column

The Action dropdown menu provides options that allow you to interact with your device, such as acknowledging alarms, resetting pulse count, runtime and min/max values, and putting the device into standby mode.

CONFIGURE DEVICE

At the top of the dashboard, click *Configure Device* to go to the device and zone programming screens.

The box on the left will display all of your configureable zones, as well as Device (for general device settings), Power, Battery and Relay Output. As you select an option, the form on the right will change to display the appropriate data. Complete the address so that the Sentinel icon will be displayed at the appropriate location on the dashboard map.

This page also contains settings for the *Device Offline* alarm and for *Standby Mode*. The *Device Offline* alarm will notify you if your devices stops communicating with the sensaphone.net servers for the programmed time duration.

Once you have completed your programming, click on the *Save Settings* button at the bottom of the page.

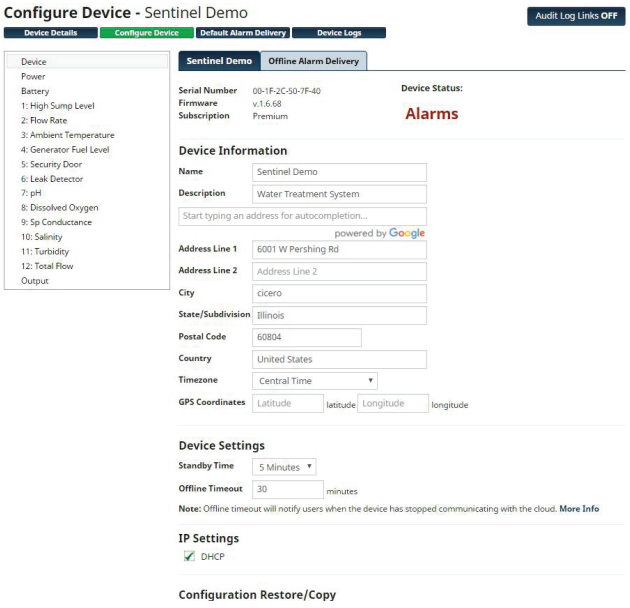

Configuring a Static IP Address

If you would like to assign your device a Static IP address, go to the Configure Device page and scroll down to the IP Settings section. Uncheck the DHCP box and the network settings will appear so that you can enter a Static IP address, Gateway, etc... Click Save to have the new settings take effect.

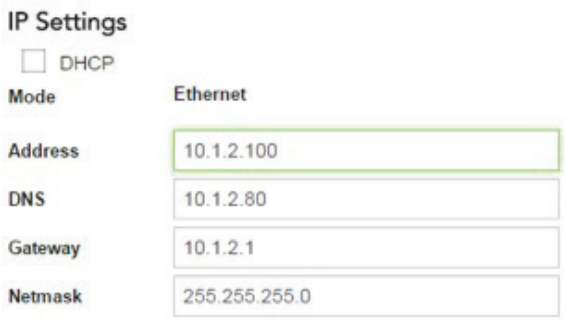

Zone Programming

Select the zone you would like to configure from the box from the left. A sample screen for a temperature sensor is shown below.

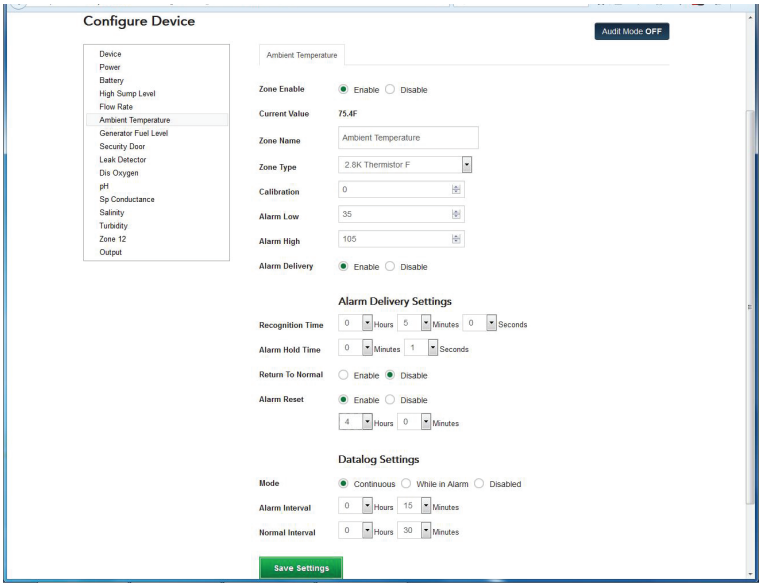

ZONE PARAMETER DEFINITIONS

Enable/Disable: This setting determines if the Zone is being used (Enabled) or not (Disabled). Selecting Disabled will remove the gauge from the Summary screen.

Name: Enter a name for the sensor you are monitoring which describes its purpose and/or location. The name will appear on the Device Details screen as well as on alarm messages.

Type: Choose the type of sensor you are connecting to the Zone input. For temperature sensors choose either degrees F or C.

Units: The Units field is used to describe the units of measure for the value being monitored. When Temperature is selected the Units field will automatically display F (Fahrenheit) or C (Celsius). When a 4-20mA type is selected you can enter the appropriate text for the monitored condition (e.g. %RH, PSI, GPM, RPM,…). When you select Normally Open (NO) or Normally Closed (NC) you can choose from several preset descriptions for the Open and Closed state of the input. The first word always describes the Open state of the contact and the second the Closed state. If you choose Custom you can enter your own text for the Open and Closed states. To do this simply type the words into the lower Units field and separate them with a slash (/). For example, "Slow/Fast", "Safe/Danger", "Dry/Wet".

Calibration: This field can be used to offset the Zone value either positive or negative if there is some error in the reading.

Alarm Low: This is used to determine the low level at which a temperature or 4–20mA Zone has reached the alarm threshold. The value must fall below the Alarm Limit to trip an alarm.

Alarm High: This is used to determine the high level at which a temperature or 4–20mA Zone has reached the alarm threshold. The value must exceed the Alarm Limit to trip an alarm.

Table Low: The Table Low value is used to define the lower range (4mA) of your 4-20mA sensor.

Table High: The Table High value is used to define the upper range (20mA) of your 4-20mA sensor.

Alarm Delivery Enable/Disable: When Enabled, alarm messages will be delivered, if set to Disabled alarm messages will not be delivered.

Recognition Time: This is the length of time that an alarm condition must be present before a valid alarm exists and message delivery is started.

Alarm Hold Time: When an alarm occurs, the *Alarm Hold Time* will latch the alarm condition for the programmed time period, thus preventing redundant alarms from sending additional notification messages. This is useful for alarms that are likely to trip several times within a short time period, such as motion detectors.

Return to Normal Enable/Disable: This feature instructs the Sentinel to send a message when a zone input has changed from an alarm condition back to a normal condition. Anyone who received the original alarm message will also be sent the Return-to-Normal message.

Alarm Reset Enable/Disable: This setting enables or disables the Alarm Reset Feature. The Alarm Reset feature is used to re-send alarm messages in the event that a fault condition is not corrected in a timely fashion. If an alarm continues to exist for the duration of the programmed Reset Time (see below) the alarm will reset (reactivate) and the alarm message delivery process will begin all over again. This is an optional feature.

Alarm Reset Time: This is the time allowed for an alarm's fault condition to be corrected before the Sentinel resets (reactivates) the alarm and begins the message delivery process all over again. It is recommended that this be set to no lower than 30 minutes to prevent numerous messages from being sent.

Datalogging Mode: The Sentinel has two modes of data logging for each zone: Continuous or While In Alarm. In Continuous mode the unit will log the value of the input on a fixed time interval all the time. The Normal Interval sets the logging rate while the value is within the normal range. The Alarm Interval sets the logging rate while the value is an alarm condition. By choosing the While In Alarm mode you can choose to have the unit only log values when it exceeds the alarm limits.

Alarm Datalog Interval: This is the interval that data will be logged while the input is beyond the programmed alarm limits. (Note: this is regardless of the programmed Alarm Recognition Time).

Normal Datalog Interval: This is the interval that data will be logged while the input is within the programmed alarm limits. To maximize the available memory for datalogging, set the Datalog Interval for each zone to multiples of each other. For example, Zone 1 can be set to 10 minutes, Zone 2 to 30 minutes, Zone 3 to 60 minutes, etc…

MANAGE USERS

The sensaphone.net website allows you to set up users that will be linked to your account. Each user can be configured to have their own login for website access and/or be contacted for alarms. In addition, you can choose to give alarm acknowledgement capability to each user.

There are several levels of permissions that can be assigned to each user. You can also enter contact information for alarm delivery purposes. From the main menu, select *Users*, then *Manage Users*. To add a new user, click on the *Add User* button. The example below shows a user setup as an administrator with four contact destinations.

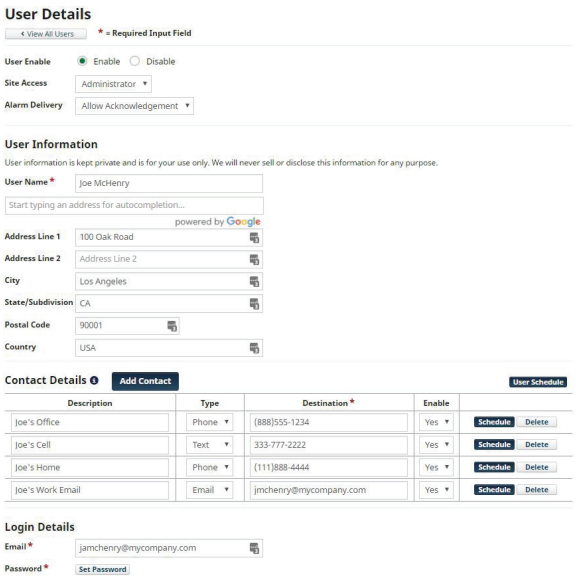

The following defines the various permission levels:

Administrator – Full site access, all devices on your account

Supervisor – Gives the user access to the Dashboard, device-specific pages (for example, Device Details), Manage Users, and Manage User Groups, but for only the devices you choose for them (chosen under the Device Groups section of the form). Supervisors will have the ability to create new users, but they can only give the users Supervisor access or lower.

User – Gives the user access to the Dashboard, but only shows the devices you choose for them (chosen under the Device Groups section of the form)

None – No access to the website

Alarm Delivery – Choose whether you would like the user to be able to receive alarm notifications or not.

Disabled – No alarm delivery

Inform Only – User is notified about the alarm, but cannot acknowledge it

Allow Acknowledgement – User is notified about the alarm and is able to acknowledge it

User Information

Next, enter details about this user. The user's name is the only required information.

Contact Details

The *Contact Details* section is where you enter the telephone numbers, text numbers, and email addresses to send alarm messages. {*Note that phone calls and text messages require a Premium Ethernet or Cellular subscription. Email alarm delivery is free*}. A '1' in the beginning of the telephone number is not required. To add additional contacts click "Add Contact". Be sure to add all of your possible contact methods in this section. You can choose which ones get used on the *Default Alarm Delivery Schedule or Zone Alarm Delivery Schedul*e.

You can also create a time schedule to limit when you'll receive alarm messages. There is an overall *User Schedule* as well as individual Schedules for each contact. The default setting for all schedules is enabled, 24/7. In the sample screen below, the highlighted section shows the times when this user will be contacted for alarms:

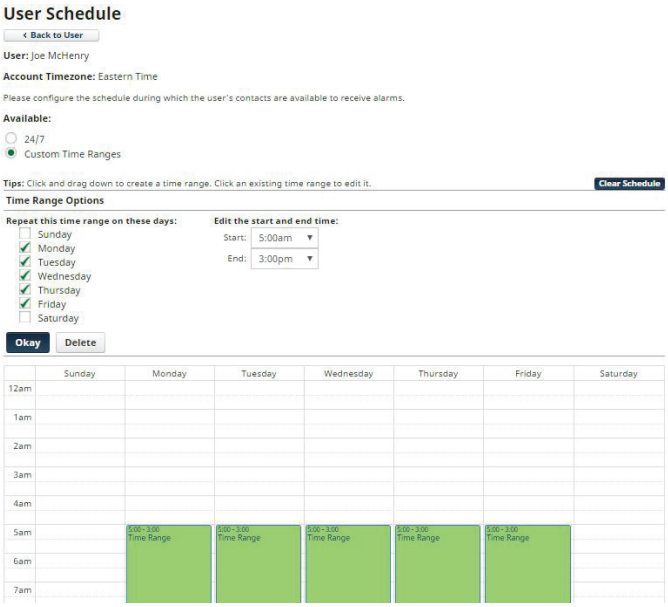

*Note that if you configure both a User Schedule and individual Contact Schedules, there must be overlap in order for alarm messages to be delivered.

Login Details

Users will login with an email address and password. Enter this information in the *Login Details* section. In the event that a user forgets his/her password they can use the reset password feature on the main login page.

Device Access

For accounts with multiple users and/or devices, you can choose to limit a user's access to selected devices. In the *Device Access* section, choose which units this User can access. See sample screen below:

Click on 'Save Changes' once you are finished.

MANAGE USER GROUPS

Allows you to set up groups of users that can be used on other site pages.

Select the group you wish to edit from the dropdown menu, or select *Create New Group* to make a new group.

Make sure to give each group a unique, descriptive name so they can be easily referenced.

Click on the plus icon to add users to the group. A pop up modal window will show that will list all the alarm users you have added to your account from the Manage Users page (see that page description for more information).

You can select an entire user (all destinations listed under that user at the time of the alarm will be notified) or individual destinations of the user.

Click on the red X icon to remove that user from the group.

Once you are finished adding and removing users, click on the *Save Group* button at the bottom of the page.

ALARM DELIVERY

The Alarm Delivery section is where you configure the people that will be contacted when an alarm occurs. You can setup a *Default Alarm Delivery Schedule* (i.e. contact list) for each device or you can create a separate *Zone Alarm Delivery Schedule* for each individual zone. A combination of both can also be used (e.g. some zones use the default schedule and others use a custom schedule). The first step is to configure your Users and Contacts as described in the *Manage Users* section. If you haven't completed that step please do it first.

Default Alarm Delivery Schedule

To get started select a device from the Dashboard and click *Details*. Next click the *Default Alarm Delivery* button. Click the *Add Destination* button to select people from your User list. You can select all of the User contacts or just a few if desired. See sample screen below:

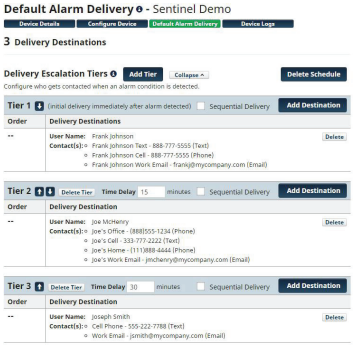

Continue clicking the *Add Destination* button to add additional User's to the list. If you would like to insert a delay between the first User (or group of Users) and the next User, click the *Add Tier* button and enter the delay time. Users in this Tier will not be contacted until the delay time expires. Click *Save Changes* when your schedule is complete.

*Note that the Tier Delay timer starts at the time the alarm occurs. If the alarm is acknowledged before the delay time expires then Users in the 2nd Tier (and beyond) will not receive the alarm message. See sample programming screen below:

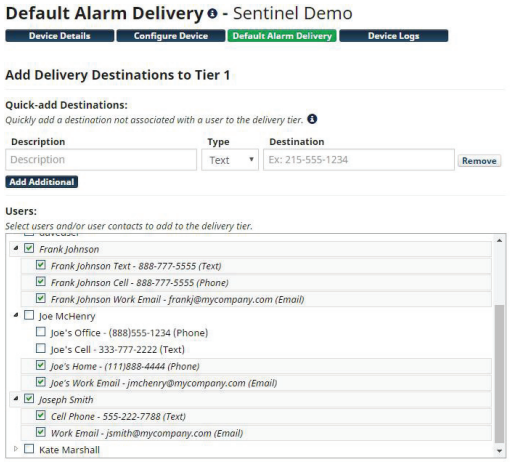

Zone Alarm Delivery Schedule

A Zone Alarm Delivery Schedule is an alarm contact list that only applies to one specific zone. You can create a separate Zone Alarm Delivery Schedule for each individual zone if required. To configure a *Zone Alarm Delivery Schedule* select a Zone from the *Device Details* page. Then click the *Zone Alarm Delivery* tab on the right. Select *Custom* to configure a contact list for the selected zone. Follow the steps as described above to complete the schedule.

Quick-Add Destinations

Quick-Add Destinations are those that can be easily entered to the notification list without creating a User Account. Note, however, that destinations added here will be inform-only (e.g. **cannot acknowledge alarms**). This entry method is useful for sending messages to people who do not require a user account in the system but may want to be informed when a particular alarm occurs.

Alarm Acknowledgment

Alarms can be acknowledged from the dashboard page by selecting a device using the checkboxes next to each device, and then clicking the "Action" drop-down at the top of the screen. You can acknowledge both Device Offline alarms or Zone alarms. Devices with 'Unacknowledged' alarms are identified with an exclamation point within a triangle. Once the alarm is acknowledged this symbol will disappear. You can acknowledge multiple alarms on multiple devices at the same time. Alarms can also be acknowledged during telephone calls by entering 555 when prompted, or by replying to alarm messages sent via email, or by replying to a text message with the letters "Ack".

LOGS

The Sentinel includes an Alarm Log and Data Log. The Alarm Log lists all alarm activity for the selected device. You can narrow down the messages by individual zones or you can select multiple zones. The Data Log contains the recorded values for each zone based on the parameters you set up on the Zone Configuration screens. You can display the values on the screen as well as graph them. There is also an option to Save the data to a file. To get to the Device Logs section, click the *Details* button from the Dashboard for the device you would like to view, then click the *Device Logs* button.

Alarm Log – Shows the history of all alarm notifications that were sent for the device

Data Log – Show the history of all logged zone values and statuses for the device

Export Data - Allows you to save selected Alarm Log or Data Log records in either CSV or pdf format. Note that CSV formatted files can be opened in Microsoft Excel.

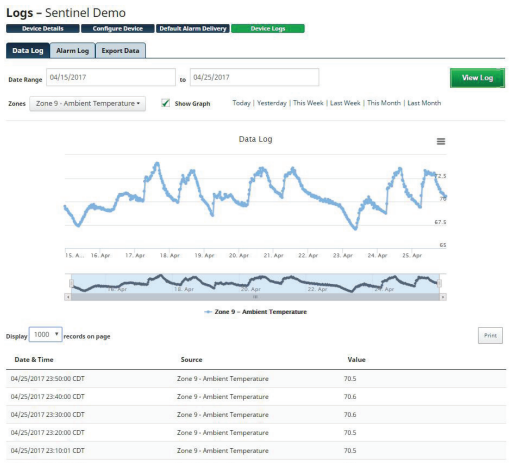

DEVICE MANAGEMENT

You can add, modify, and remove Sentinel devices from your account on the Manage Devices screen. From the main menu select Admin, then Manage Devices. Listed below are the device-related actions that can be done.

Adding Devices - To add a new device to your account, enter the device serial number (located on the bottom of the unit in the format 00:07:F9:00:00:00) and give the device a name, then click *Add Device*.

Reboot Device - To reboot your device, select it from the list to the left and then choose Reboot Device from the drop down box at the bottom of the page, then click Submit. Your Sentinel will reboot and then reconnect within a few minutes. Your Sentinelgramming will remain intact.

Remove From Account - To remove a device from your account, select it from the list to the left and then choose Remove from Account from the drop-down box at the bottom of the page. Then click *Submit.*

Reset to Default Values - To reset a device to default settings, select it from the list to the left and then choose *Reset to Default Values* from the drop-down box at the bottom of the page. Then click *Submit.* Allow several minutes for your device to complete the reset process.

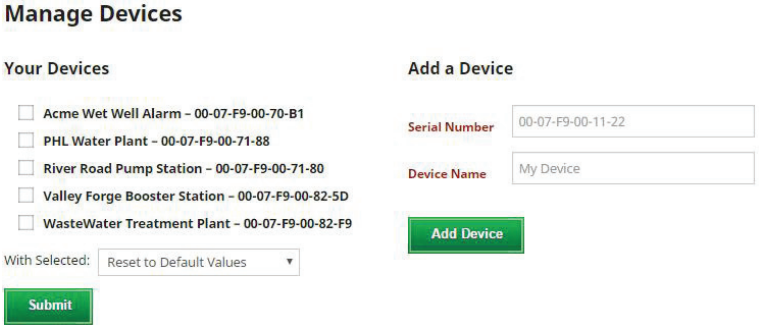

DEVICE GROUPS

In cases where you have many devices and many users it may be desirable to create Device Groups. These can make it easier to assign device permissions to specified Users. From the main menu select Admin, then Device Groups. In the main window, you will see a list of all your devices and any groups you may have already created. Devices are shown with a green device icon and groups are shown with a black icon. You can have multiple groups, and you can even have groups within a group. If a device icon is lined up on the left-most side of the window, they are not in a group.

To add a new group, click on the Add Group button at the top of the page. A 'New Group' icon will appear in the list. You can rename the group by right clicking on it and selecting Rename. To move a device into a group, click on the device and drag it into the group. Continue adding devices until you're finished, then click Save Groups.

The blue number shown on the group icon shows how many devices are within that group. To remove a group, right click on the group and select Delete. Any devices in that group will be moved up one level. For example, if a group that had two devices was deleted, the two devices would be shifted to the left and would no longer be in any group. You can also click and drag a device or group to reorder them. To search through your devices click on Filters. You can choose to hide any device or group that does not match your search, and you can choose to only search through your devices and not your groups. Once you are finished editing your groups, click on the Save Groups button at the bottom of the page.

.

CHAPTER 3: CONFIGURING THE RELAY OUTPUT

The Sentinel includes a relay output that can be used to control a light, siren, or other low voltage device. The output can be configured to switch either manually or automatically when a zone changes state or exceeds the alarm limits. To program the output click *Output* from the *Device Details* or *Configure Device* screen. The following configuration page will appear:

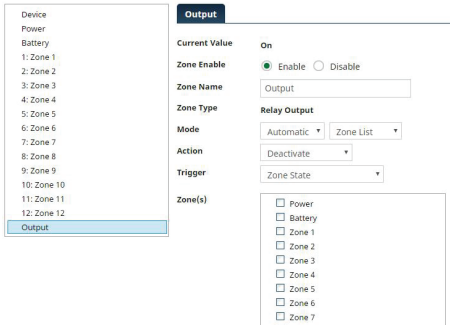

Enter a Name so that you'll know what the Output will be controlling. The Output can operate in Manual mode or Automatic mode. In manual mode you can turn the relay ON or OFF through the web page or the mobile App. To manually switch the relay output, click in the State field and select either ON or OFF, then click *Save Changes*. The change request will be sent to the Sentinel and the *Current Value* will update after the output change has successfully completed.

In Automatic mode the relay can be programmed to turn-on automatically when certain conditions are met. Listed below is a description of the parameters that apply to the automatic modes.

Input Selection - Next to the Automatic mode selection box is another drop-down that allows you to select which zones will control the output. There are four options (Zone List, Type List, All Inputs, and Limit: Zones).

Zone List: This option allows you to individually select which zones will cause the output to switch. Check the boxes next to the desired zones.

Type List: This option allows you select zones based on the zone Type. For example, you could have all of the zones configured for Temperature control the output.

All Inputs: This option selects all of the inputs (zones).

Limit: Zones: This option allows you to independently control the output based on the value of one or two zones using greater-than, less-than, or equal-to comparison statements. A separate Output-On and Output-Off instruction can be configured with its own comparison value. See sample below:

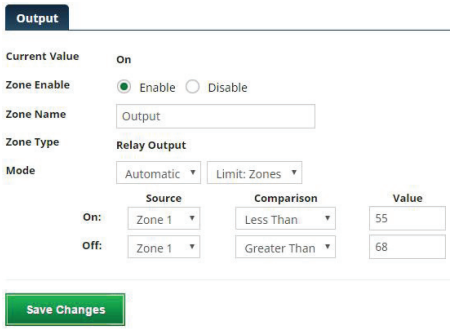

Action - This setting determines what the Output will do when the selected zone (or zones) exceeds the alarm limits. You can have the relay Activate (turn-on), Deactivate (turn-off), or Cycle (ON under normal conditions, momentarily OFF for 10 seconds when an alarm condition occurs, then back ON).

Trigger - The trigger determines what will cause the output to change state. There are 3 options to choose from which are described below:

Unacknowledged Alarms: Choosing this option will make the Output change to the setting defined by the Action for as long as an Unacknowledged Alarm persists on the selected zones. Once the alarm is acknowledged the Output will revert back to its normal position.

Alarm Condition: Choosing this option will make the Output change to the setting defined by the *Action* for as long as the selected input(s) remain in Alarm, regardless of acknowledgement. Once the selected zones return to their normal state the Output will revert back to its normal position.

Zone State: Choosing this option will make the output change to the setting defined by the *Action* as soon as the selected zones exceed the alarm limits. In other words, the alarm recognition time is not enforced, and the Output will change instantly. Once the selected zones return to their normal state the Output will revert back to its normal position.

Relay Output Wiring

The relay output can be used to turn on a light, siren, or other low voltage device. The relay is rated for up to 30VAC/VDC 1 Amp. A sample wiring diagram is shown below:

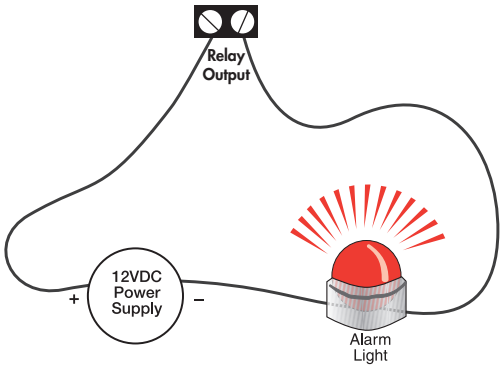

APPENDIX A: WEEKLY TESTING PROCEDURE

We recommend that you test your Sensaphone weekly to be sure it is functioning properly. This will ensure that when a problem arises the Sensaphone will be ready to alert the appropriate personnel.

There are several tests that can be performed:

1.) Create an alarm on each zone by tripping all connected sensors.

Temperature sensors: Heat or cool the sensor.

Motion sensors: Have someone walk in front of the sensor.

Door/window sensors: open the door/window.

Water sensors: Apply a small amount of water beneath the sensor or use a wet towel and touch it to the sensor probes.

Humidity sensors: Raise the humidity around the sensor by holding a cup of very hot water beneath the sensor.

2.) Allow the unit to contact all programmed users. This will make sure that the Sensaphone is programmed properly. It will also prepare personnel to respond appropriately when they receive a message from the Sensaphone.

3.) Test the battery (if installed) by unplugging the AC adapter and making sure that the Sensaphone continues to function. Keep the AC adapter unplugged so that a Power Failure alarm occurs. Plug in the AC adapter after the unit has finished.

4.) Keep a log of your tests, noting the date and whether the Sentinel passed in each category tested. An example of such a log is shown below. (See "Test Log" at the end of this manual.)

WEB600 Test Log

Date	Inputs		Alarm		Battery		
	Pass	Fail	Pass	Fail	Pass	Fail	
07/19/09	☒	☐	☒	☐	☒	☐	Bob H
08/20/09	☒	☐	☒	☐	☒	☐	Alex G.
09/19/09	☒	☐	☒	☐	☒	☐	Bob H.
	☐	☐	☐	☐	☐	☐	
	☐	☐	☐	☐	☐	☐	

If you require assistance, call Sensaphone Technical Support at 610-558-2700.

APPENDIX B: ACCESSORIES

The sensors listed below are available from Sensaphone, and represent the most commonly used zone devices. Other dry contact sensors, designed for more specialized applications, may also be used. Commercial or industrial electrical supply houses can provide devices to monitor virtually any condition. For further information, contact Sensaphone Customer Service at 610-558-2700.

Part #	Description	Part #	Sensor/Switch
BAT-0032	Sentinel Battery	FGD-0100	2.8k Remote Temperature Sensor
FGD-0006	Magnetic Reed Switch	FGD-0101	2.8k Weatherproof Temperature Probe
FGD-0007	Passive Infra-Red Detector	FGD-0102	10k Weatherproof Temperature Probe
FGD-0010	50' two-conductor #22AWG shielded Cable	FGD-0103	10k Indoor Decorator
FGD-0013	Spot Water Detector	FGD-0104	10k Outdoor Air Weatherproof
FGD-0022	Temp° Alert	FGD-0205	Multi-Point Wireless I/O System
FGD-0027	Humidistat	FGD-0301	Pressure Sensor
FGD-0049	Smoke Detector with Built-in Relay	FGD-0303	Vibration Sensor
FGD-0052	Humidity 4-20mA Transmitter		
FGD-0053	24VDC Power Supply		
FGD-0054	Power-Out Alert		
FGD-0056	Zone Water Detector w/Water Rope		
FGD-0063	Additional 10' Water Rope for FGD-0056		
FGD-0065	Carbon Monoxide Sensor		
FGD-0066	Air Quality Sensor		
FGD-0067	Surge Suppressor		
FGD-0070	Power supply with battery backup		

APPENDIX C: SPECIFICATIONS

ALERT ZONES

Number of Zones: 12

Zone Connector: terminal block

Zone Types: N.O./N.C. contact, 2.8K Thermistor (-109° to 115°F, -85° to 57°C) And 10K Thermistor (-87° to 168°F; -66° to 76°C), and 4-20mA (-80,000.0 to 80,000.0

Zone Characteristics: 28.7KΩ to 3.3V (temperature/contact) or 250 Ohms to ground (4-20mA)

A/D Converter Resolution: 12 bits ±2 LSB

Zone Protection: 5.5VDC Metal Oxide Varistor with fast acting diode clamps.

Pulse Counting: 1ms minimum duration, 1 pulse-per-second maximum rate

RELAY OUTPUT

Rated for 1A 30VAC/ 1A 30VDC Maximum

DATA LOGGING

1 minute to 24 hour sampling rate

User programmable channel selection

Zones 1 – 12

Battery

Input Power

LED INDICATORS

Power: On steady when the unit is powered on.

Alarm: Off when no alarm exists.

Ethernet Link and Activity LEDs

Online

Standby

COMMUNICATION TYPE:

10/100 BASE-T Ethernet with SSL encryption

POWER SUPPLY

Power Supply: 120VAC/12VDC 50/60Hz 6W wall plug-in transformer w/6’ cord.

Power Consumption: 2 Watts

Power Protection: Metal Oxide Varistor

BATTERY BACKUP

Rechargeable Battery: Internal 8 Hr NiMH Battery Pack (Part # BAT-0032).

Memory/Clock Battery: Internal 5-10 yr CR2 lithium (Part # BAT-0033).

ENVIRONMENTAL

Operating Temperature: 32–122° F (0–50° C)

Operating Humidity: 0–90% RH non-condensing

Storage Temperature: 32°–140° F (0–60° C)

PHYSICAL

SCD-1200

Enclosure: Powder-coated aluminum enclosure with tabs for wall or panel mounting

Physical Dimensions: 5.5” x 5.5” x 1.5” (140 mm x 140 mm x 38 mm)

Weight: 1 lb. (0.45 kg)

SCD-1200-CD, -SD (Weatherproof)

Enclosure: High impact polycarbonate, UL Type 4X/6P (IP66/68)

Physical Dimensions: 9.5” x 11.1” x 3.5” (241 mm x 282 mm x 89 mm)

Weight: 6 lb. (2.72 kg)

SCD-1200-4Gxxxx (Weatherproof w/Cellular Modem)

Enclosure: High impact polycarbonate, UL Type 4X (IP66)

Physical Dimensions: 12.0” x 13.7” x 7.4” (305 mm x 348 mm x 188 mm)

Weight: 14 lb. (6.35 kg)

APPENDIX D: THERMISTORS

2.8K THERMISTOR DATA

Degrees Celsius	Resistance (Ohms)
-50	187,625
-40	94,206
-30	49,549
-20	27,180
-10	15,491
0	9,142
10	5,572
20	3,498
30	2,256
40	1,491
50	1,009
60	697
70	490
80	351

10K THERMISTOR DATA

Degrees Celsius	Resistance (Ohms)
-50	441.3K
-40	239.8K
-30	135.2K
-20	78.91K
-10	47.54K
0	29.49K
10	18.79K
20	12.25K
30	8,194K
40	5,592
50	3,893
60	2,760
70	1,990
80	1,458
90	1,084
100	816.8
120	481.8
130	376.4
140	297.2
150	237.0

APPENDIX E: RETURNING THE UNIT FOR REPAIR

In the event that the Sentinel does not function properly, we suggest that you do the following:

1) Record your observations regarding the Sentinel's malfunction.

2) Call the Technical Service Department at 610-558-2700 prior to sending the unit to Sensaphone for repair.

If the unit must be sent to Sensaphone for Servicing, please do the following:

1) Unplug the AC power supply from the wall outlet and disconnect all sensors from the alert zones.

2) Carefully pack the unit to avoid damage in transit. Use the original container (if available) or a sturdy shipping box.

3) You must include the following information to avoid shipping delays:

    a) Your name, address and telephone number.

    b) A note explaining the problem.

4) Ship your package to the address below:

SERVICE DEPARTMENT

SENSAPHONE

901 Tryens Road

Aston, PA 19014

5) Ship prepaid and insured via UPS or US Mail to ensure a traceable shipment with recourse for damage or replacement.

APPENDIX F: TEST LOG

Date	Inputs		Alarms		Battery						Tested By
	Pass ☐	Fail ☐	Pass ☐	Fail ☐	Pass ☐	Fail ☐	Pass ☐	Fail ☐	Pass ☐	Fail ☐	
	Pass ☐	Fail ☐	Pass ☐	Fail ☐	Pass ☐	Fail ☐	Pass ☐	Fail ☐	Pass ☐	Fail ☐	
	Pass ☐	Fail ☐	Pass ☐	Fail ☐	Pass ☐	Fail ☐	Pass ☐	Fail ☐	Pass ☐	Fail ☐	
	Pass ☐	Fail ☐	Pass ☐	Fail ☐	Pass ☐	Fail ☐	Pass ☐	Fail ☐	Pass ☐	Fail ☐	
	Pass ☐	Fail ☐	Pass ☐	Fail ☐	Pass ☐	Fail ☐	Pass ☐	Fail ☐	Pass ☐	Fail ☐	
	Pass ☐	Fail ☐	Pass ☐	Fail ☐	Pass ☐	Fail ☐	Pass ☐	Fail ☐	Pass ☐	Fail ☐	
	Pass ☐	Fail ☐	Pass ☐	Fail ☐	Pass ☐	Fail ☐	Pass ☐	Fail ☐	Pass ☐	Fail ☐	
	Pass ☐	Fail ☐	Pass ☐	Fail ☐	Pass ☐	Fail ☐	Pass ☐	Fail ☐	Pass ☐	Fail ☐	
	Pass ☐	Fail ☐	Pass ☐	Fail ☐	Pass ☐	Fail ☐	Pass ☐	Fail ☐	Pass ☐	Fail ☐	
	Pass ☐	Fail ☐	Pass ☐	Fail ☐	Pass ☐	Fail ☐	Pass ☐	Fail ☐	Pass ☐	Fail ☐	
	Pass ☐	Fail ☐	Pass ☐	Fail ☐	Pass ☐	Fail ☐	Pass ☐	Fail ☐	Pass ☐	Fail ☐	
	Pass ☐	Fail ☐	Pass ☐	Fail ☐	Pass ☐	Fail ☐	Pass ☐	Fail ☐	Pass ☐	Fail ☐	
	Pass ☐	Fail ☐	Pass ☐	Fail ☐	Pass ☐	Fail ☐	Pass ☐	Fail ☐	Pass ☐	Fail ☐	
	Pass ☐	Fail ☐	Pass ☐	Fail ☐	Pass ☐	Fail ☐	Pass ☐	Fail ☐	Pass ☐	Fail ☐	
	Pass ☐	Fail ☐	Pass ☐	Fail ☐	Pass ☐	Fail ☐	Pass ☐	Fail ☐	Pass ☐	Fail ☐	
	Pass ☐	Fail ☐	Pass ☐	Fail ☐	Pass ☐	Fail ☐	Pass ☐	Fail ☐	Pass ☐	Fail ☐	
	Pass ☐	Fail ☐	Pass ☐	Fail ☐	Pass ☐	Fail ☐	Pass ☐	Fail ☐	Pass ☐	Fail ☐	
	Pass ☐	Fail ☐	Pass ☐	Fail ☐	Pass ☐	Fail ☐	Pass ☐	Fail ☐	Pass ☐	Fail ☐	
	Pass ☐	Fail ☐	Pass ☐	Fail ☐	Pass ☐	Fail ☐	Pass ☐	Fail ☐	Pass ☐	Fail ☐	
	Pass ☐	Fail ☐	Pass ☐	Fail ☐	Pass ☐	Fail ☐	Pass ☐	Fail ☐	Pass ☐	Fail ☐	
	Pass ☐	Fail ☐	Pass ☐	Fail ☐	Pass ☐	Fail ☐	Pass ☐	Fail ☐	Pass ☐	Fail ☐	
	Pass ☐	Fail ☐	Pass ☐	Fail ☐	Pass ☐	Fail ☐	Pass ☐	Fail ☐	Pass ☐	Fail ☐	
	Pass ☐	Fail ☐	Pass ☐	Fail ☐	Pass ☐	Fail ☐	Pass ☐	Fail ☐	Pass ☐	Fail ☐	
	Pass ☐	Fail ☐	Pass ☐	Fail ☐	Pass ☐	Fail ☐	Pass ☐	Fail ☐	Pass ☐	Fail ☐	

Date	Inputs		Alarms		Battery						Tested By
	Pass ☐	Fail ☐	Pass ☐	Fail ☐	Pass ☐	Fail ☐	Pass ☐	Fail ☐	Pass ☐	Fail ☐	
	Pass ☐	Fail ☐	Pass ☐	Fail ☐	Pass ☐	Fail ☐	Pass ☐	Fail ☐	Pass ☐	Fail ☐	
	Pass ☐	Fail ☐	Pass ☐	Fail ☐	Pass ☐	Fail ☐	Pass ☐	Fail ☐	Pass ☐	Fail ☐	
	Pass ☐	Fail ☐	Pass ☐	Fail ☐	Pass ☐	Fail ☐	Pass ☐	Fail ☐	Pass ☐	Fail ☐	
	Pass ☐	Fail ☐	Pass ☐	Fail ☐	Pass ☐	Fail ☐	Pass ☐	Fail ☐	Pass ☐	Fail ☐	
	Pass ☐	Fail ☐	Pass ☐	Fail ☐	Pass ☐	Fail ☐	Pass ☐	Fail ☐	Pass ☐	Fail ☐	
	Pass ☐	Fail ☐	Pass ☐	Fail ☐	Pass ☐	Fail ☐	Pass ☐	Fail ☐	Pass ☐	Fail ☐	
	Pass ☐	Fail ☐	Pass ☐	Fail ☐	Pass ☐	Fail ☐	Pass ☐	Fail ☐	Pass ☐	Fail ☐	
	Pass ☐	Fail ☐	Pass ☐	Fail ☐	Pass ☐	Fail ☐	Pass ☐	Fail ☐	Pass ☐	Fail ☐	
	Pass ☐	Fail ☐	Pass ☐	Fail ☐	Pass ☐	Fail ☐	Pass ☐	Fail ☐	Pass ☐	Fail ☐	
	Pass ☐	Fail ☐	Pass ☐	Fail ☐	Pass ☐	Fail ☐	Pass ☐	Fail ☐	Pass ☐	Fail ☐	
	Pass ☐	Fail ☐	Pass ☐	Fail ☐	Pass ☐	Fail ☐	Pass ☐	Fail ☐	Pass ☐	Fail ☐	
	Pass ☐	Fail ☐	Pass ☐	Fail ☐	Pass ☐	Fail ☐	Pass ☐	Fail ☐	Pass ☐	Fail ☐	
	Pass ☐	Fail ☐	Pass ☐	Fail ☐	Pass ☐	Fail ☐	Pass ☐	Fail ☐	Pass ☐	Fail ☐	
	Pass ☐	Fail ☐	Pass ☐	Fail ☐	Pass ☐	Fail ☐	Pass ☐	Fail ☐	Pass ☐	Fail ☐	
	Pass ☐	Fail ☐	Pass ☐	Fail ☐	Pass ☐	Fail ☐	Pass ☐	Fail ☐	Pass ☐	Fail ☐	
	Pass ☐	Fail ☐	Pass ☐	Fail ☐	Pass ☐	Fail ☐	Pass ☐	Fail ☐	Pass ☐	Fail ☐	
	Pass ☐	Fail ☐	Pass ☐	Fail ☐	Pass ☐	Fail ☐	Pass ☐	Fail ☐	Pass ☐	Fail ☐	
	Pass ☐	Fail ☐	Pass ☐	Fail ☐	Pass ☐	Fail ☐	Pass ☐	Fail ☐	Pass ☐	Fail ☐	
	Pass ☐	Fail ☐	Pass ☐	Fail ☐	Pass ☐	Fail ☐	Pass ☐	Fail ☐	Pass ☐	Fail ☐	
	Pass ☐	Fail ☐	Pass ☐	Fail ☐	Pass ☐	Fail ☐	Pass ☐	Fail ☐	Pass ☐	Fail ☐	
	Pass ☐	Fail ☐	Pass ☐	Fail ☐	Pass ☐	Fail ☐	Pass ☐	Fail ☐	Pass ☐	Fail ☐	
	Pass ☐	Fail ☐	Pass ☐	Fail ☐	Pass ☐	Fail ☐	Pass ☐	Fail ☐	Pass ☐	Fail ☐	
	Pass ☐	Fail ☐	Pass ☐	Fail ☐	Pass ☐	Fail ☐	Pass ☐	Fail ☐	Pass ☐	Fail ☐	
	Pass ☐	Fail ☐	Pass ☐	Fail ☐	Pass ☐	Fail ☐	Pass ☐	Fail ☐	Pass ☐	Fail ☐	
	Pass ☐	Fail ☐	Pass ☐	Fail ☐	Pass ☐	Fail ☐	Pass ☐	Fail ☐	Pass ☐	Fail ☐	

CONDENSATE PUMP

ITT CORPORATION

GOULDS CENTRIFUGAL PUMP

MODEL NPE

BNPE

ITT

Commercial Water

Goulds Pumps

G&L Series NPE

316L SS

NPE Series End Suction Centrifugal Pumps

Bombas Centrífugas de Succión Final Serie NPE

GOULDS PUMPS

Goulds Pumps is a brand of ITT Corporation.

Goulds Pumps es una marca de fábrica de ITT Corporation.

www.goulds.com

Engineered for life

A Full Range of Product Features
Una Gama Total de Características del Producto

Superior Materials of Construction: Complete AISI 316L stainless steel liquid handling components and mounting bracket for corrosion resistance, quality appearance, and improved strength and ductility.

High Efficiency Impeller: Enclosed impeller with unique floating seal ring design maintains maximum efficiencies over the life of the pump without adjustment.

Casing and Adapter Features: Stainless steel construction with NPT threaded, centerline connections, easily accessible vent, prime and drain connections with stainless steel plugs. Optional seal face vent/flush available.

Mechanical Seal: Standard John Crane Type 21 with carbon versus silicon-carbide faces, Viton elastomers, and 316 stainless metal parts. Optional high temperature and chemical duty seals available.

Motors: NEMA standard open drip-proof, totally enclosed fan cooled or explosion proof enclosures. Rugged ball bearing design for continuous duty under all operating conditions.

Materiales Superiores de Construcción: *Componentes completos para manejo de líquidos en acero inoxidable AISI 316L y consola para el montaje para resistencia a la corrosión, apariencia de calidad, y fuerza y ductilidad mejoradas.*

Impulsor de Eficiencia Superior: *El impulsor encerrado con un diseño único de anillo del sello flotante, mantiene sin ajustes, la eficiencia máxima sobre la vida de la bomba.*

Características de la Carcasa y del Adaptador: *Construcción en acero inoxidable con NPT roscado, conexiones centrales, válvulas de fácil acceso, conexiones de cebado y drenaje con enchufes de acero inoxidable. Cara del sello válvula/chorro opcional disponible.*

Sello Mecánico: *Estándar John Crane Tipo 21 con carbón en contraste con caras de silicón-carbide, elastómeros de Viton, y partes metálicas de acero inoxidable 316. Sellos de alta temperatura y productos químicos están disponibles.*

Motores: *Estándar NEMA a prueba de goteo, ventilador totalmente encerrado o recintos a prueba de explosión. Diseño robusto de balineras de bolas para trabajo continuo en todas las condiciones de funcionamiento.*

NPE Product Line Numbering System
Línea de Producto NPE Sistema de Numeración

Example Product Code,
Ejemplo Código del Producto

1 ST 2 C 1 A 4 F

Seal Vent/Flush Option,
Opción de Sello Válvula/ChorroSeal Ven

Mechanical Seal and O-ring
4 = Pre-engineered standard
For optional mechanical seal modify catalog order no. with seal code listed below.

Sello Mecánico y Anillo 'O'
4 = Estándar aprobado
Para sello mecánico opcional modificar el número de orden del catálogo con el código del sello anotado abajo.

John Crane Type 21 Mechanical Seal (⅝" seal),
Sello Mecánico John Crane Tipo 21 (sello de ⅝")

Seal Code, *Código del Sello*	Rotary, *Rotativo*	Stationary, *Estacionario*	Elastomers, *Elastómeros*	Metal Parts, *Partes Metálicas*	Part No., *Pieza Número*
2	Carbon	Silicon Carbide	EPR	316 SS	10K18
4			Viton		10K55
5	Silicon Carbide		EPR		10K81
6			Viton		10K62

Impeller Option . . . No Adder Required
For optional impeller diameters modify catalog order no. with impeller code listed. Select optional impeller diameter from pump performance curve.

Código del Impulsor Opcional
Para impulsores con diámetros opcionales modificar el número de orden del catálogo con el código del impulsor anotado. Escoger el impul con diámetro opcional de la curva de funcionamiento de la bomba.

Impeller Code, *Código del Impulsor*	Pump Size, *Tamaño de la Bomba*		
	1 x 1¼ – 6	1¼ x 1½ – 6	1½ x 2 – 6
	Diameter	Diameter	Diameter
K	–	6⅛	–
G	–	5 15/16	5⅜
H	–	5½	5
A	6⅛	5¼	4¾
B	5¾	5 1/16	4⅝
C	5 3/16	4⅞	4⅜
D	4¾	4⅝	4 1/16
E	4 7/16	4¼	3⅝
F	4 1/16	3⅞	–

Driver, *Conductor*
1 = 1 PH, ODP
2 = 3 PH, ODP
3 = 575 V, ODP
4 = 1 PH, TEFC
5 = 3 PH, TEFC
6 = 575 V, TEFC
7 = 3 PH, XP
8 = 575 V, XP
9 = 3 PH, TEFC Premium Eff.
0 = 1 PH, XP

HP Rating, *HP Potencia*
C = ½ HP E = 1 HP G = 2 HP J = 5 HP
D = ¾ HP F = 1½ HP H = 3 HP

Driver: Hertz/Pole/RPM,
Conductor: Hercios/Polo/RPM
1 = 60 Hz, 2 pole, 3500 RPM
2 = 60 Hz, 4 pole, 1750 RPM
3 = 60 Hz, 6 pole, 1150 RPM
4 = 50 Hz, 2 pole, 2900 RPM
5 = 50 Hz, 4 pole, 1450 RPM

For frame mounted version, substitute the letters "FRM" in these positions.
Para la versión con el armazón montado, sustituya las letras "FRM" en estas posiciones.

Material
ST = Stainless steel, *Acero inoxidable*

Pump Size, *Tamaño de la Bomba*
1 = 1 x 1¼ – 6 2 = 1¼ x 1½ – 6 3 = 1½ x 2 – 6

The various versions of the NPE are identified by a product code number on the pump label. This number is also the catalog number for the pump. The meaning of each digit in the product code number is shown at left.

Las diferentes versiones de la NPE se identifican con un número de código del producto en la etiqueta de la bomba. Este número es también el número del catálogo para la bomba. El significado de cada dígito en el número de código del producto se muestra a la izquierda.

Performance Coverage (60 Hz)
Alcance de Funcionamiento (60 Hz)

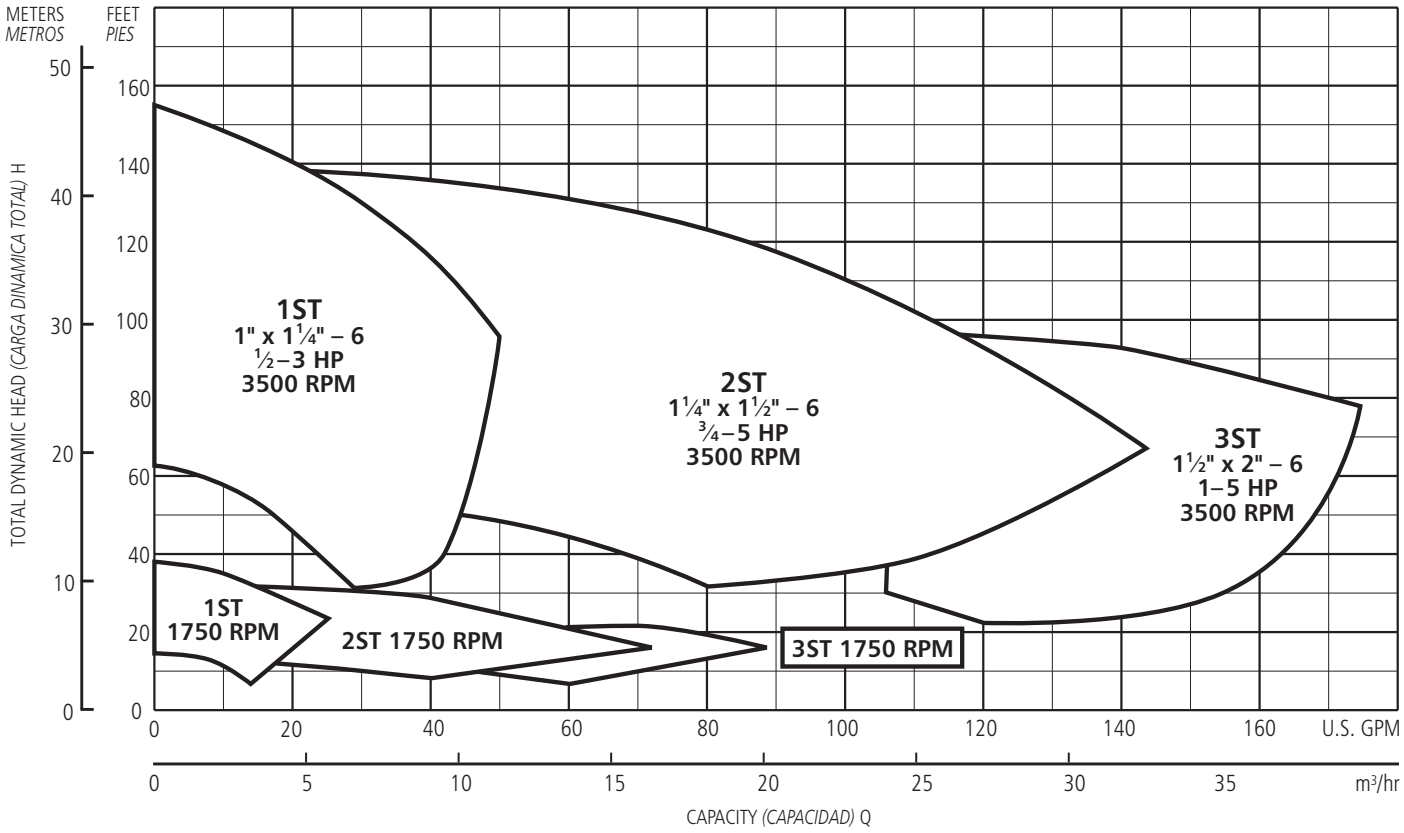

NOTES:

Not recommended for operation beyond printed H-Q curve.

For critical application conditions consult factory.

Not all combinations of motor, impeller and seal options are available for every pump model. Please check with G&L on non-cataloged numbers.

All standard 3500 RPM ODP and TEFC motors supplied by Goulds Pumps, have minimum of 1.15 service factor. Standard catalog units may utilize available service factor. Any motors supplied other than Goulds Pumps check available service factor.

NOTAS:

No se recomienda para funcionamiento superior al impreso en la curva H-Q.

Para condiciones de aplicaciones críticas consultar con la fábrica.

No todas las combinaciones de las opciones de motor, impulsor y sello están disponibles para cada modelo de bombas. Por favor verifique con G&L en los números no catalogados.

Todos los motores estándar de 3500 RPM, ODP (abiertos resguardados) y TEFC (totalmente encerrados con enfriamiento forzado) provistos por Goulds Pumps tienen un factor mínimo de servicio de 1,15. Las unidades estándar de catálogo pueden utilizar el factor de servicio disponible. Verificar el factor de servicio disponible de todo motor no provisto por Goulds Pumps.

NPE Close Coupled Pump Major Components: Materials of Construction
Bomba Cerrada Acoplada NPE Componentes Principales: Materiales de Construcción

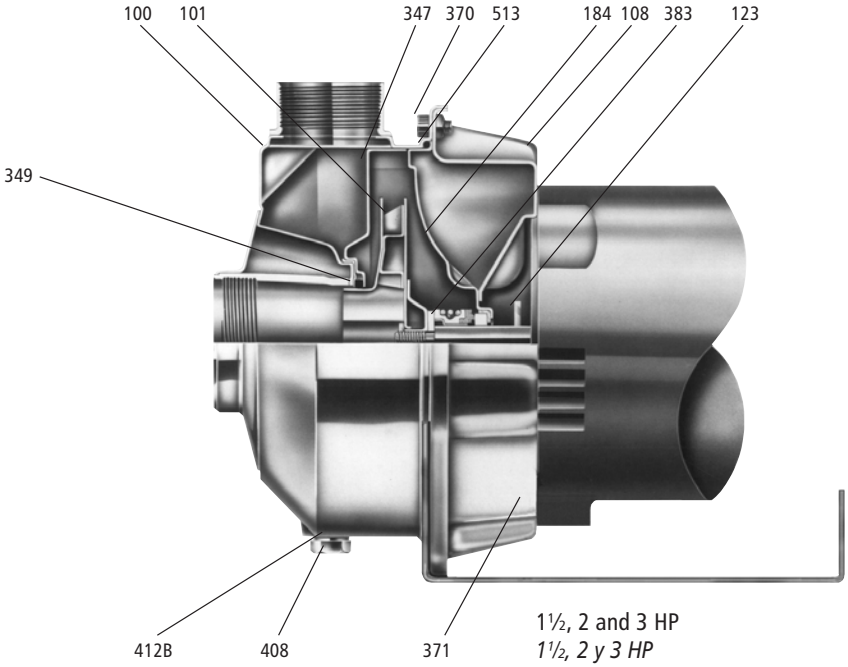

1½, 2 and 3 HP
1½, 2 y 3 HP

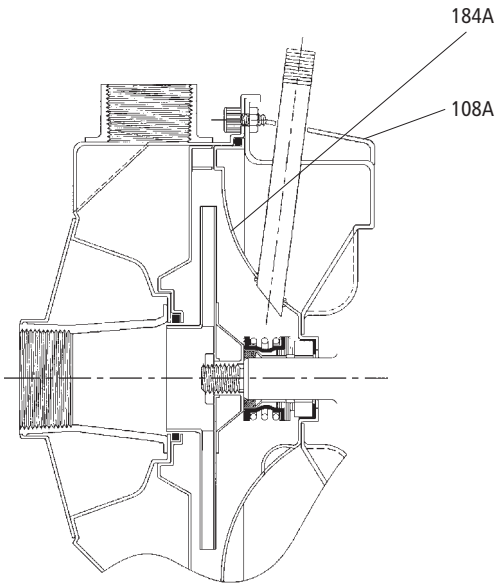

Seal Face Vent/Flush Option,
Opción Cara del Sello Válvula/Chorro

Item No., ***Parte No.***	**Description,** ***Descripción***	**Materials,** ***Materiales***
100	Casing; *Carcasa*	AISI 316L SS; *AISI 316L Acero inoxidable*
101	Impeller; *Impulsor*	
108	Motor adapter; *Adaptador del motor*	
108A	Motor adapter seal vent/flush; *Sello válvula/chorro del adaptador del motor*	
123	Deflector; *Deflector*	BUNA-N
184	Seal housing; *Alojamiento del sello*	AISI 316L SS; *AISI 316L Acero inoxidable*
184 A	Seal housing seal vent/flush; *Sello válvula/chorro del alojamiento del sello*	
347	Guidevane; *Difusor*	
349	Seal ring, guidevane; *Anillo del sello, difusor*	Viton
370	Socket head screws, casing; *Encajes cabezas de tornillos, carcasa*	AISI 410 SS; *AISI 410 Acero inoxidable*
371	Bolts, motor; *Tornillos, motor*	Plated steel; Acero chapeado
383	Mechanical seal; *Sello mecánico*	**see chart, *ver tabla*
408	Drain and vent plug, casing; *Enchufes de drenaje y válvula, carcasa*	AISI 316L SS; *AISI 316L Acero inoxidable*
412B	O-ring, drain and vent plug; *Anillo 'O', enchufe de drenaje y válvula*	Viton (Standard, *estándar*) EPR (Optional, *Opcional*)
513	O-ring, casing; *Anillo 'O', carcasa*	
Motor *Motor*	NEMA standard, 56J flange; *NEMA estándar, brida 56J*	

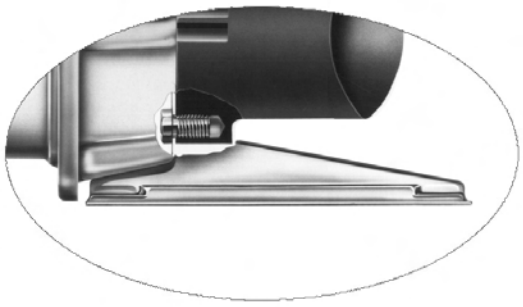

½, ¾ and 1 HP
½, ¾ y 1 HP

Footed motor for 5 HP ODP and TEFC, all explosion proof motors, see page 13.

Motor con pie para 5 HP ODP y TEFC, a prueba de explosiones motores, en la página 13.

NPE Frame Mounted Pump Major Components: Materials of Construction
Bomba NPE de Armazón Montado Componentes Principales: Materiales de Construcción

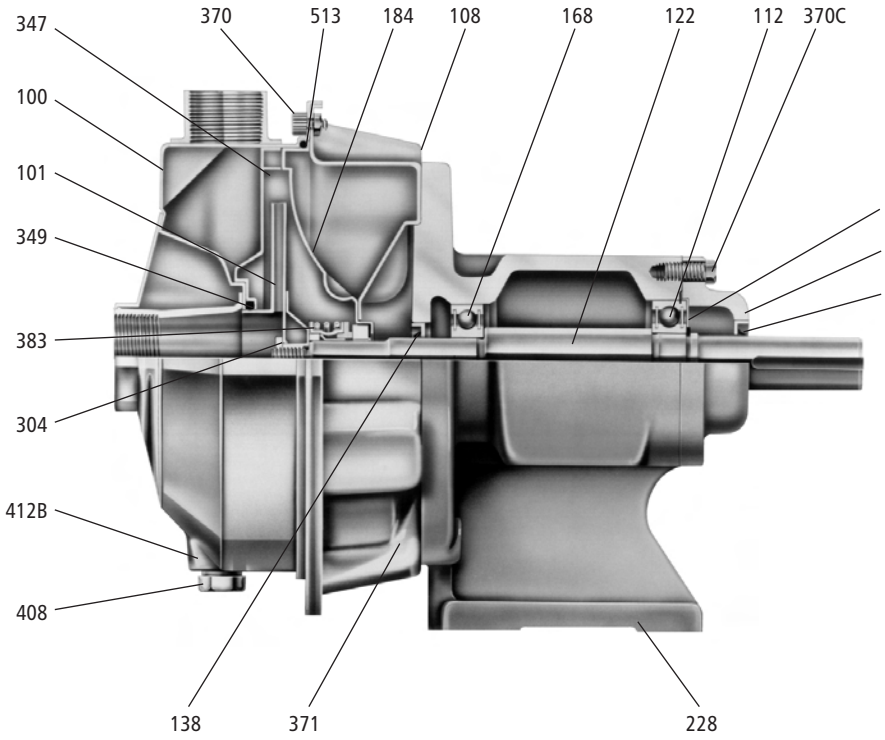

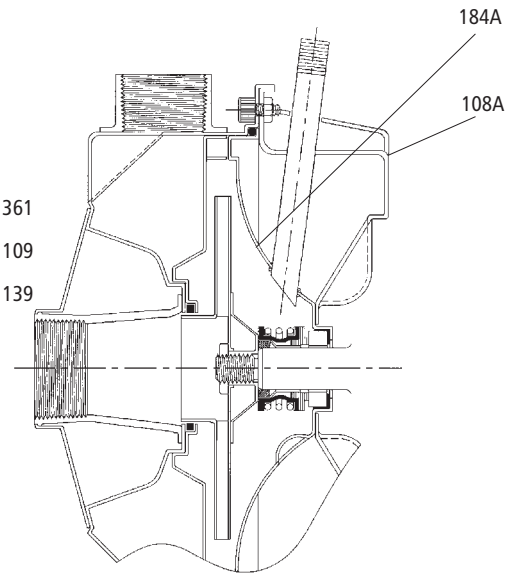

Seal Face Vent/Flush Option,
Opción Cara del Sello Válvula/Chorro

Item No., *Parte No.*	Description, *Descripción*	Materials, *Materiales*
100	Casing; *Carcasa*	AISI 316L SS; *AISI 316L Acero inoxidable*
101	Impeller; *Impulsor*	
108	Adapter; *Adaptador*	
108A	Motor adapter seal vent/flush; *Sello válvula/chorro del adaptador del motor*	
109	Bearing cover; *Cubierta de balineras*	Cast iron; *Hierro fundido*
112	Ball bearing (outboard); *Balineras de bolas (exterior)*	Steel; *Acero*
122	Shaft; *Eje*	AISI 316 SS; *AISI 316 Acero inoxidable*
138	Lip-seal (inboard); *Sello cubierto (interior)*	BUNA/steel; *BUNA/acero*
139	Lip-seal (outboard); *Sello cubierto (exterior)*	BUNA/steel; *BUNA/acero*
168	Ball bearing (inboard); *Balineras de bolas (interior)*	Steel; *Acero*
184	Seal housing; *Alojamiento del sello*	AISI 316L SS; *AISI 316L Acero inoxidable*
184 A	Seal housing seal vent/flush; *Sello válvula/chorro del alojamiento del sello*	
228	Bearing frame; *Armazón de balineras*	Cast iron, *Hierro fundido*

Item No., *Parte No.*	Description, *Descripción*	Materials, *Materiales*
304	Impeller locknut; *Contratuerca del impulsor*	AISI 316 SS; *AISI 316 Acero inoxidable*
347	Guidevane; *Difusor*	
349	Seal ring, guidevane; *Anillo del sello, difusor*	Viton
361	Retaining ring; *Anillo de retención*	Steel; Acero
370	Socket head screws, casing; *Encaje cabeza del tornillo, carcasa*	AISI 410 SS; *AISI 410 Acero inoxidable*
370C	Hex head screw, bearing cover; *Tornillo de cabeza hexagonal, cubierta de balineras*	Plated steel; *Acero chapeado*
371	Hex head screw, bearing frame; *Tornillo de cabeza hexagonal, armazón de balineras*	Plated steel; *Acero chapeado*
383	Mechanical seal; *Sello mecánico*	**see chart; ver tabla
400	Shaft key; *Llave del eje*	Steel; Acero
408	Drain and vent plug, casing; *Enchufes de drenaje y válvula, carcasa*	AISI 316 SS; *AISI 316 Acero inoxidable*
412B	O-ring, drain and vent plug; *Anillo 'O', enchufe de drenaje y válvula*	Viton (Standard, *estándar*) EPR (Optional, *Opcional*)
513	O-ring, casing; *Anillo 'O', carcasa*	

Performance Curves – 60 Hz, 3500 RPM
Curvas de Funcionamiento – 60 Hz, 3500 RPM

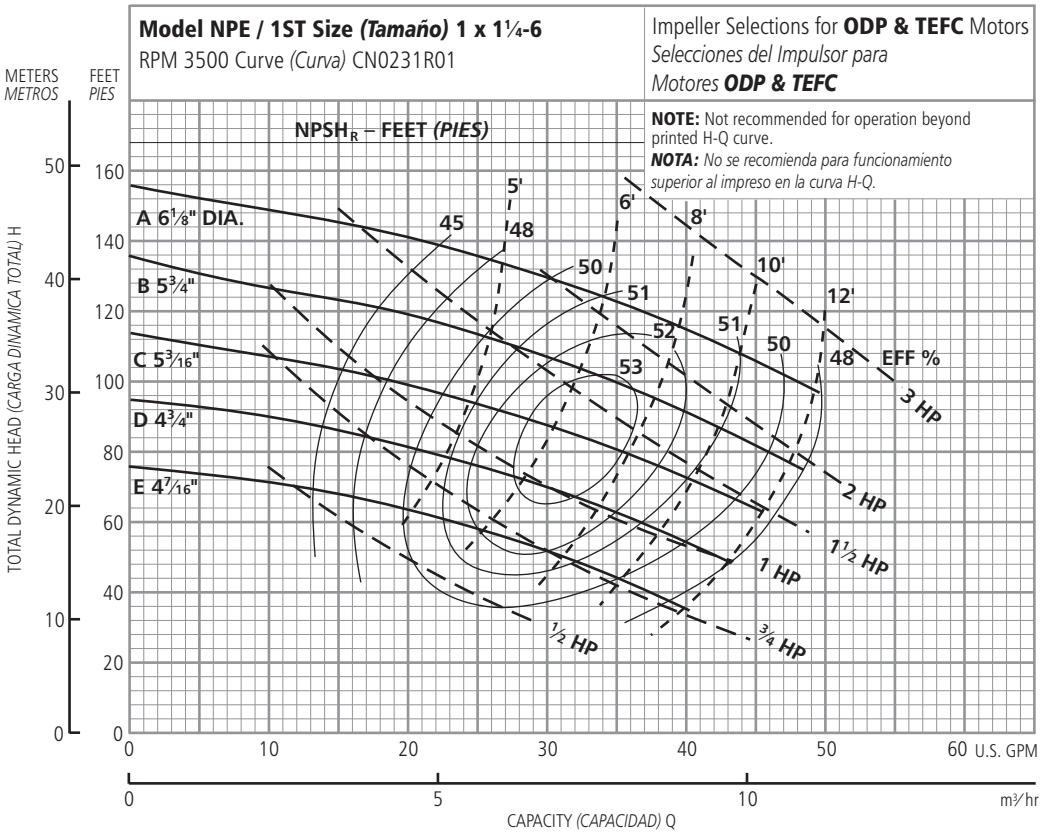

Ordering Code, *Código de Pedido*	Standard HP Rating, *Estándar HP Potencia*	Imp. Dia.
E	½	4 7/16"
D	¾	4¾
C	1	5 3/16
B	1½	5¾
A	2	6⅛

NOTE: Although not recommended, the pump may pass a 1/16" sphere.

NOTA: *Si bien no se recomienda, la bomba puede pasar una esfera de 1/16".*

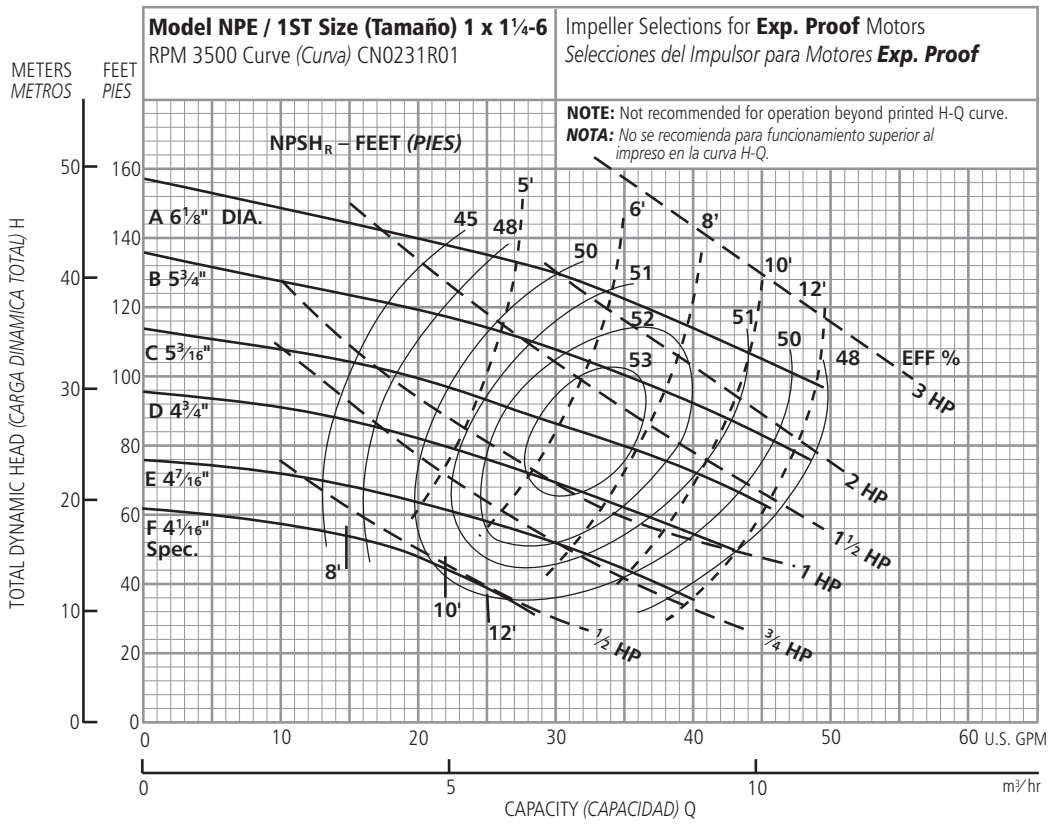

Ordering Code, *Código de Pedido*	Standard HP Rating, *Estándar HP Potencia*	Imp. Dia.
F	½	4 1/16" spec.
E	¾	4 7/16
D	1	4¾
C	1½	5 3/16
B	2	5¾
A	3	6⅛

NOTE: Although not recommended, the pump may pass a 1/16" sphere.

NOTA: *Si bien no se recomienda, la bomba puede pasar una esfera de 1/16".*

Performance Curves – 60 Hz, 3500 RPM
Curvas de Funcionamiento – 60 Hz, 3500 RPM

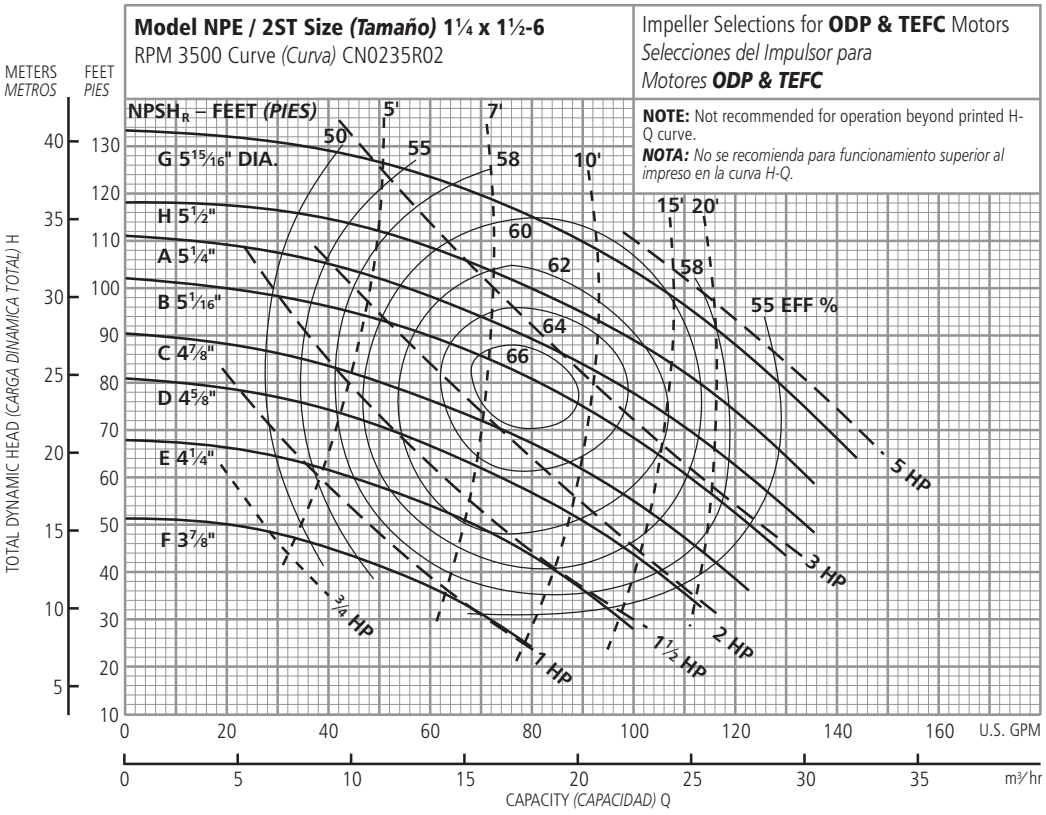

Ordering Code, *Código de Pedido*	Standard HP Rating, *Estándar HP Potencia*	Imp. Dia.
F	¾	3 7/8"
E	1	4 1/4
D	1½	4 5/8
C	2	4 7/8
B	3	5 1/16
A	3	5 1/4
H	5	5 1/2
G	5	5 15/16

NOTE: Although not recommended, the pump may pass a 3/16" sphere.

NOTA: *Si bien no se recomienda, la bomba puede pasar una esfera de 3/16".*

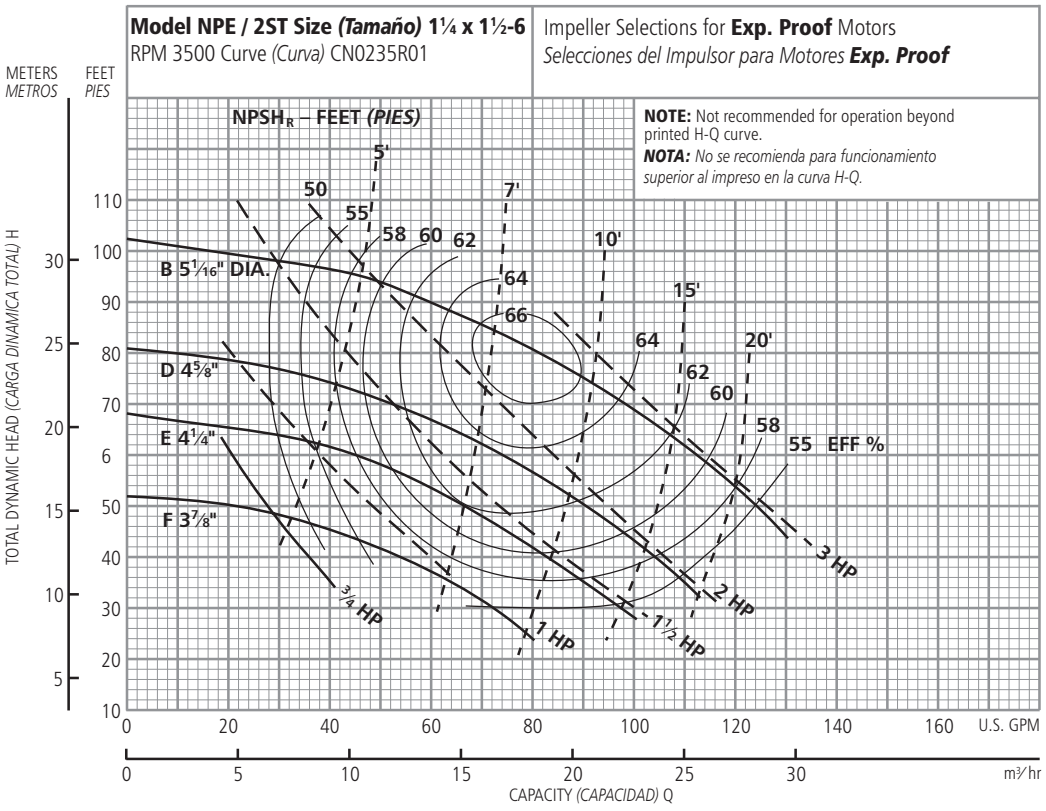

Ordering Code, *Código de Pedido*	Standard HP Rating, *Estándar HP Potencia*	Imp. Dia.
F	1	3 7/8"
E	1½	4 1/4
D	2	4 5/8
B	3	5 1/16

NOTE: Although not recommended, the pump may pass a 3/16" sphere.

NOTA: *Si bien no se recomienda, la bomba puede pasar una esfera de 3/16".*

Performance Curves – 60 Hz, 3500 RPM
Curvas de Funcionamiento – 60 Hz, 3500 RPM

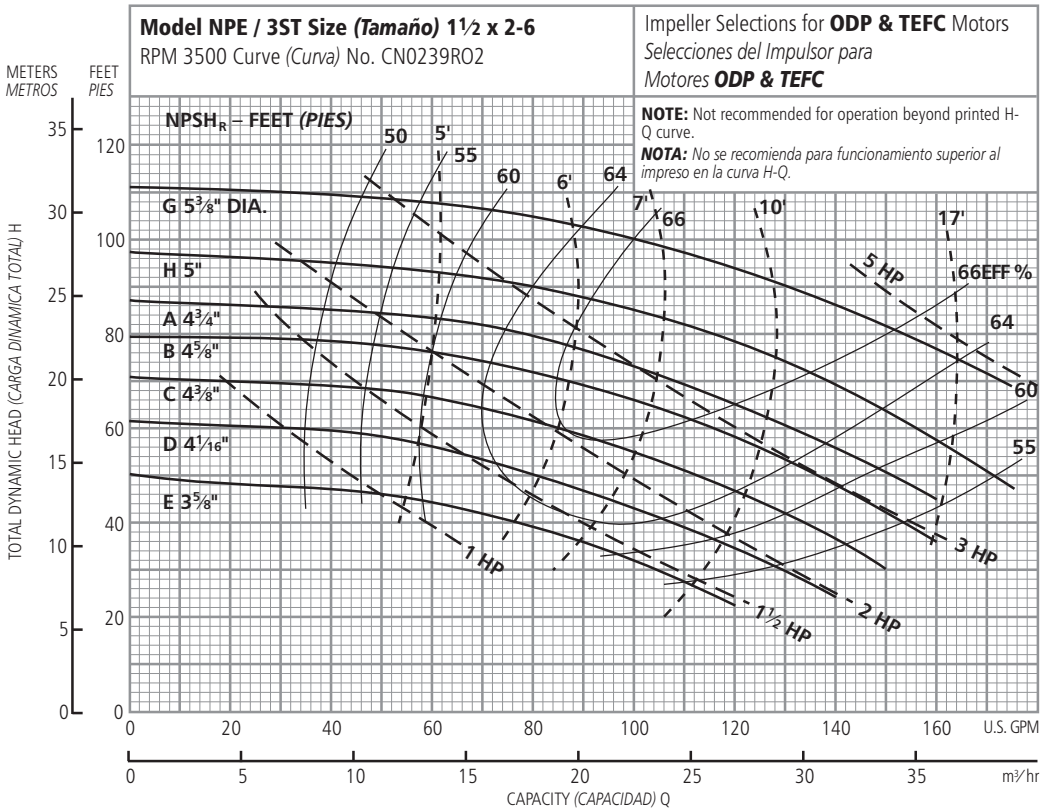

Ordering Code, *Código de Pedido*	Standard HP Rating, *Estándar HP Potencia*	Imp. Dia.
E	1	3⅝"
D	1½	4¹⁄₁₆
C	2	4⅜
B	3	4⅝
A	3	4¾
H	5	5
G	5	5⅜

NOTE: Although not recommended, the pump may pass a 11/32" sphere.

NOTA: *Si bien no se recomienda, la bomba puede pasar una esfera de 11/32".*

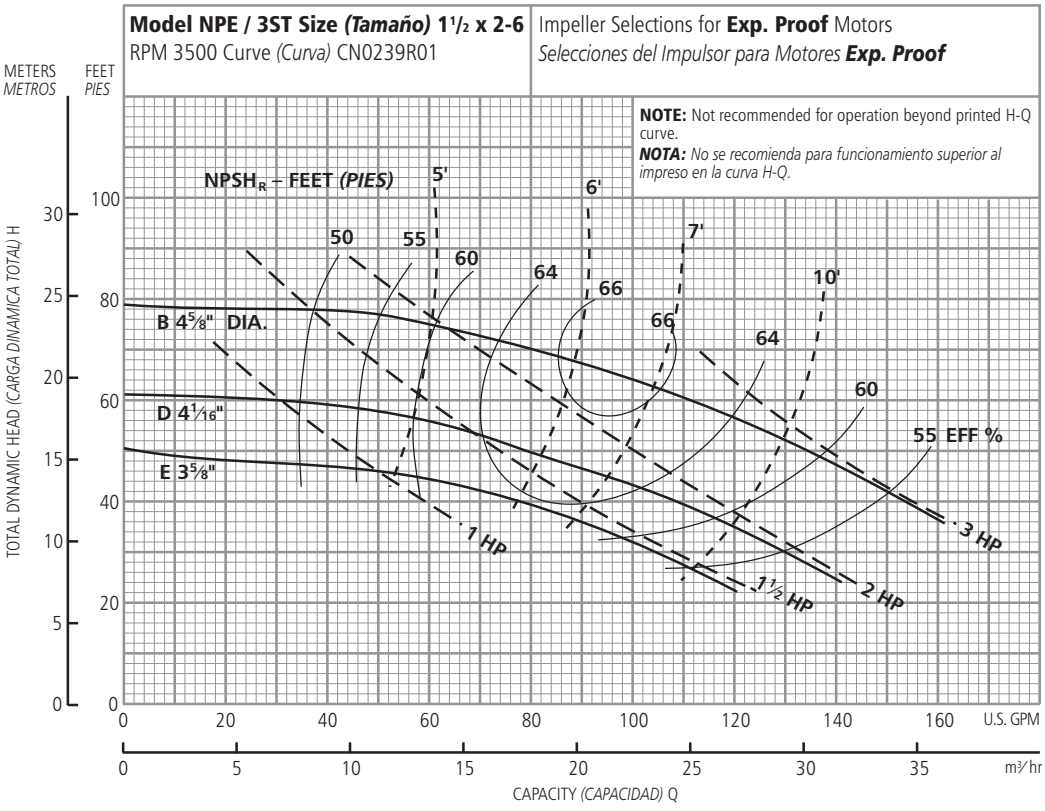

Ordering Code, *Código de Pedido*	Standard HP Rating, *Estándar HP Potencia*	Imp. Dia.
E	1½	3⅝"
D	2	4¹⁄₁₆
B	3	4⅝

NOTE: Although not recommended, the pump may pass a 11/32" sphere.

NOTA: *Si bien no se recomienda, la bomba puede pasar una esfera de 11/32".*

Performance Curves – 60 Hz, 1750 RPM
Curvas de Funcionamiento – 60 Hz, 1750 RPM

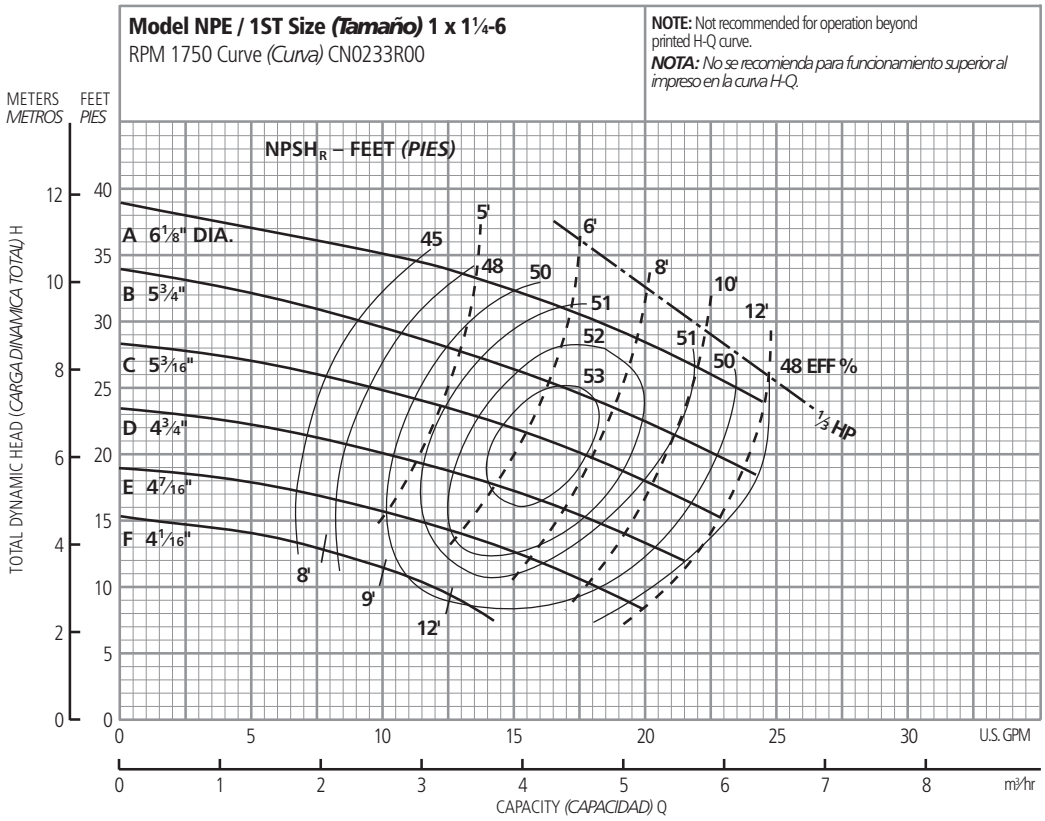

Optional Impeller, *Impulsor Opcional*	
Ordering Code, *Código de Pedido*	**Dia.**
A	6⅛"
B	5¾
C	5³⁄₁₆
D	4¾
E	4⁷⁄₁₆
F	4¹⁄₁₆

NOTE: Although not recommended, the pump may pass a ¹⁄₁₆" sphere.

NOTA: *Si bien no se recomienda, la bomba puede pasar una esfera de ¹⁄₁₆".*

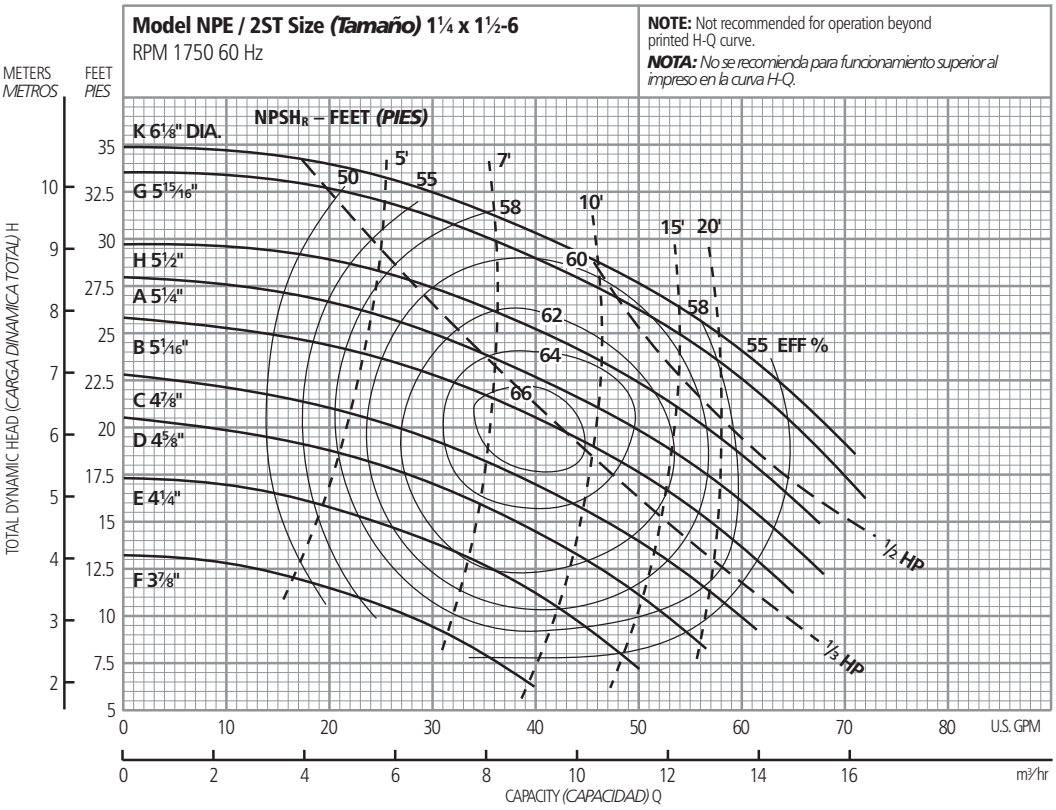

Optional Impeller, *Impulsor Opcional*	
Ordering Code, *Código de Pedido*	**Dia.**
K	6⅛"
G	5¹⁵⁄₁₆"
H	5½
A	5¼
B	5¹⁄₁₆
C	4⅞
D	4⅝
E	4¼
F	3⅞

NOTE: Although not recommended, the pump may pass a ³⁄₁₆" sphere.

NOTA: *Si bien no se recomienda, la bomba puede pasar una esfera de ³⁄₁₆".*

Performance Curves – 60 Hz, 1750 RPM
Curvas de Funcionamiento – 60 Hz, 1750 RPM

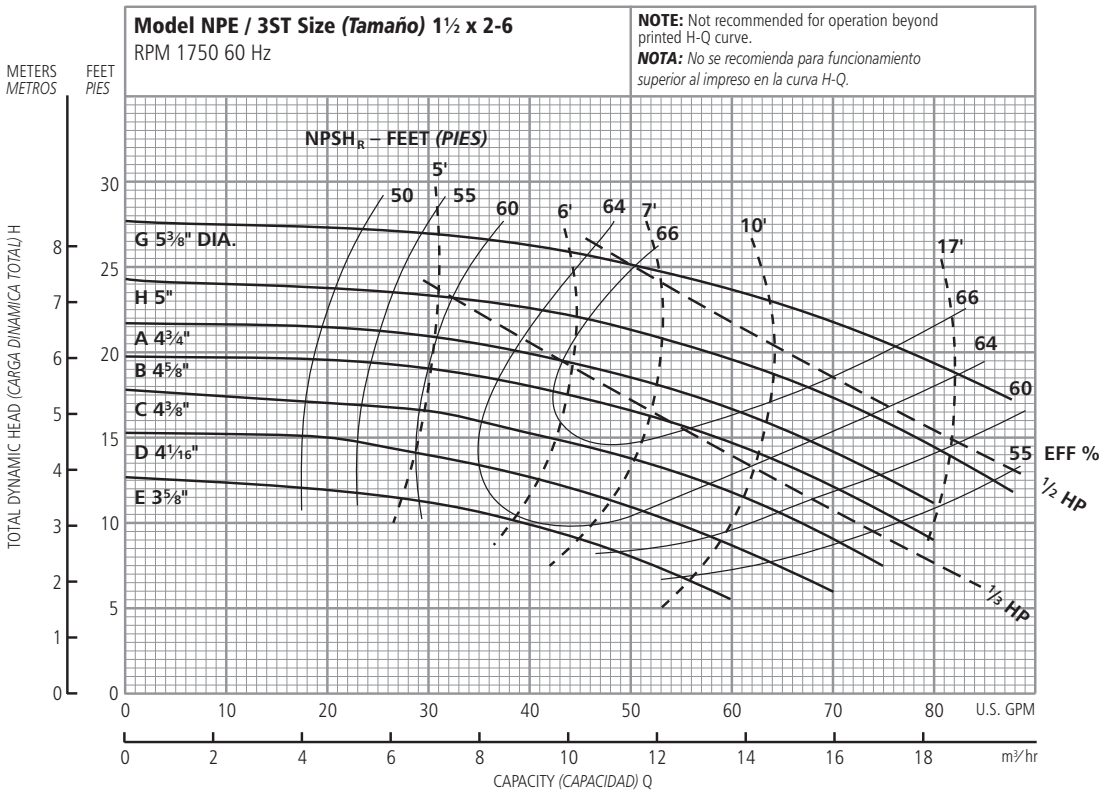

Optional Impeller, *Impulsor Opcional*	
Ordering Code, *Código de Pedido*	**Dia.**
G	5⅜"
H	5
A	4¾
B	4⅝
C	4⅜
D	4 1/16
E	3⅝

NOTE: Although not recommended, the pump may pass a 11/32" sphere.

NOTA: *Si bien no se recomienda, la bomba puede pasar una esfera de 11/32".*

Performance Curves – 50 Hz, 2900 RPM
Curvas de Funcionamiento – 50 Hz, 2900 RPM

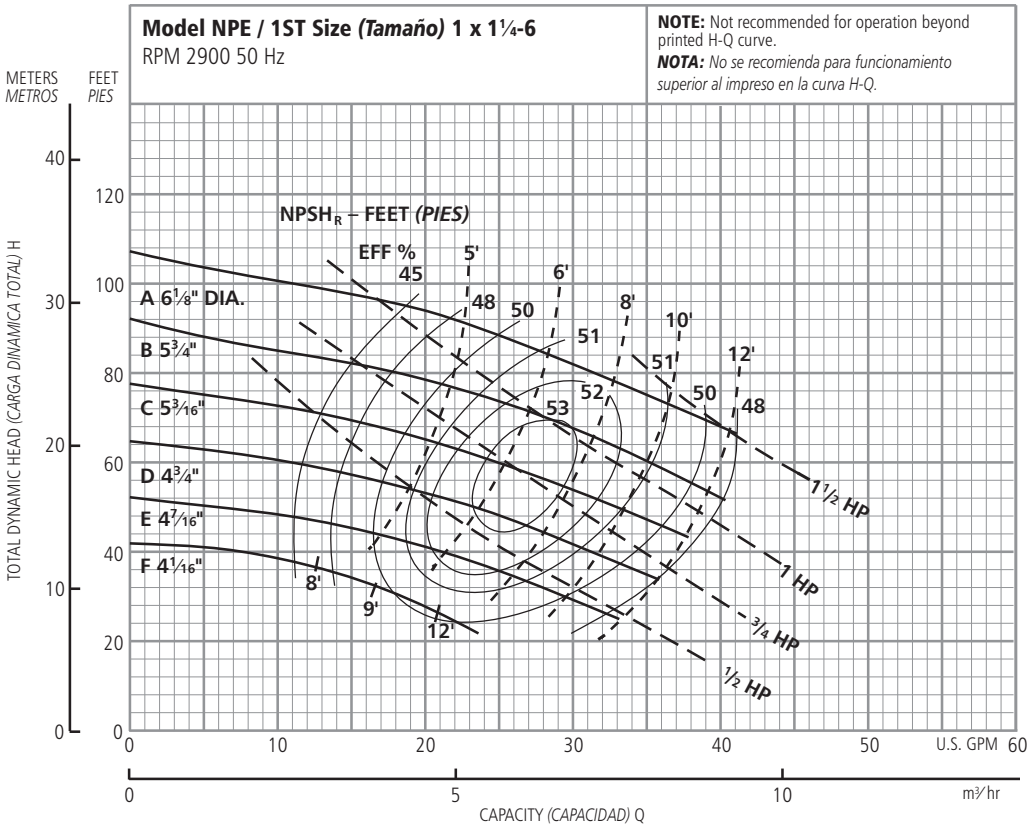

Optional Impeller, *Impulsor Opcional*	
Ordering Code, *Código de Pedido*	**Dia.**
A	6 1/8"
B	5¾
C	5 3/16
D	4¾
E	4 7/16
F	4 1/16

NOTE: Although not recommended, the pump may pass a 1/16" sphere.

NOTA: *Si bien no se recomienda, la bomba puede pasar una esfera de 1/16".*

Performance Curves – 50 Hz, 2900 RPM
Curvas de Funcionamiento – 50 Hz, 2900 RPM

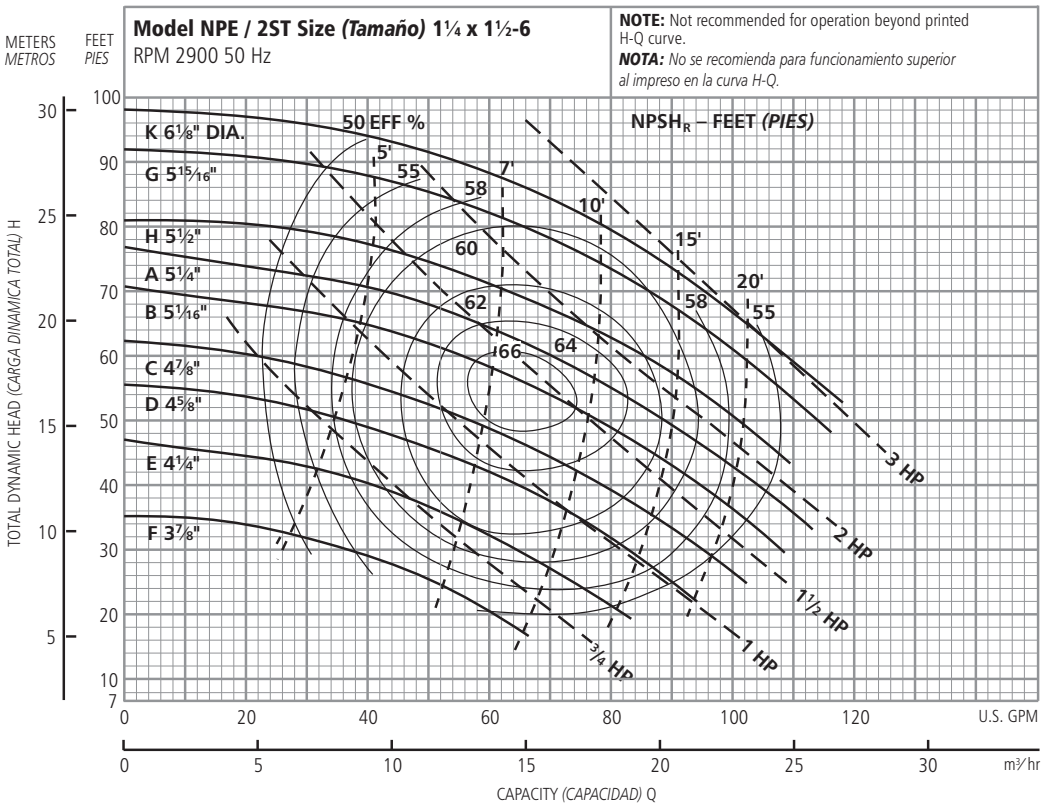

Optional Impeller, *Impulsor Opcional*	
Ordering Code, *Código de Pedido*	**Dia.**
K	6⅛"
G	5¹⁵⁄₁₆"
H	5½
A	5¼
B	5¹⁄₁₆
C	4⅞
D	4⅝
E	4¼
F	3⅞

NOTE: Although not recommended, the pump may pass a 3⁄16" sphere.

NOTA: *Si bien no se recomienda, la bomba puede pasar una esfera de 3⁄16".*

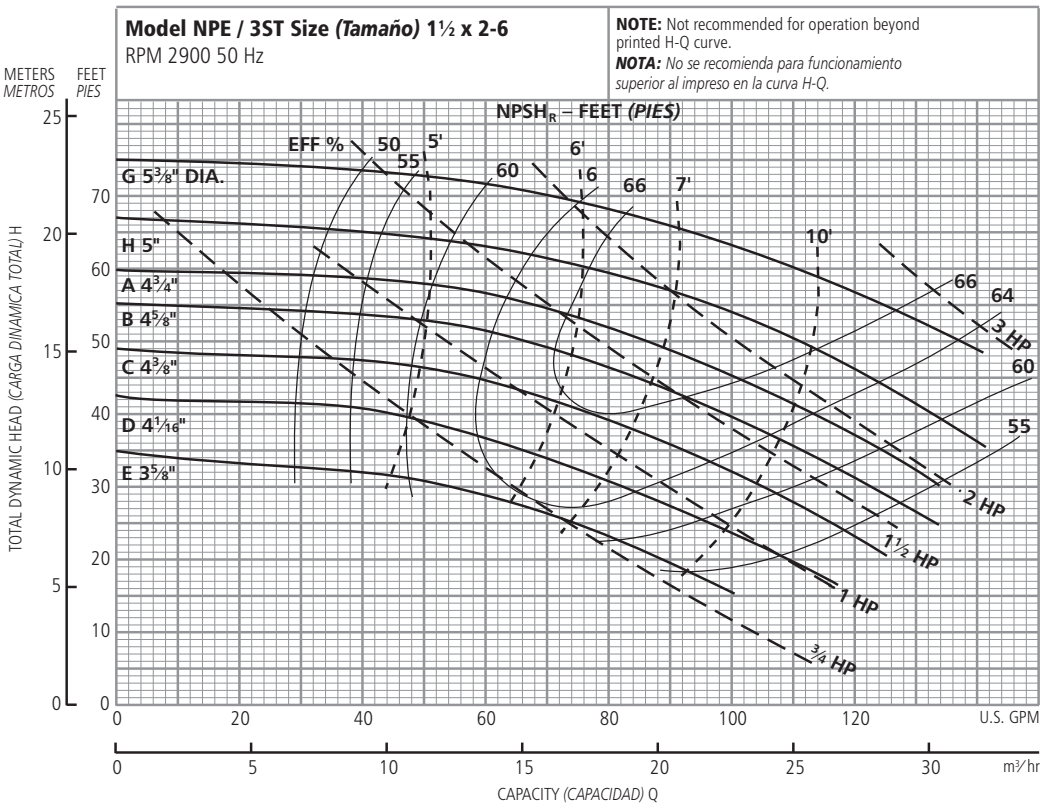

Optional Impeller, *Impulsor Opcional*	
Ordering Code, *Código de Pedido*	**Dia.**
G	5⅜"
H	5
A	4¾
B	4⅝
C	4⅜
D	4¹⁄₁₆
E	3⅝

NOTE: Although not recommended, the pump may pass a 11⁄32" sphere.

NOTA: *Si bien no se recomienda, la bomba puede pasar una esfera de 11⁄32".*

NPE Close Coupled – Dimensions, Weights and Specifications
NPE Acople Cerrado – Dimensiones, Pesos y Especificaciones

Clockwise Rotation Viewed from Drive End
Rotación en Dirección de las Agujas del Reloj Visto desde el Extremo del Motor

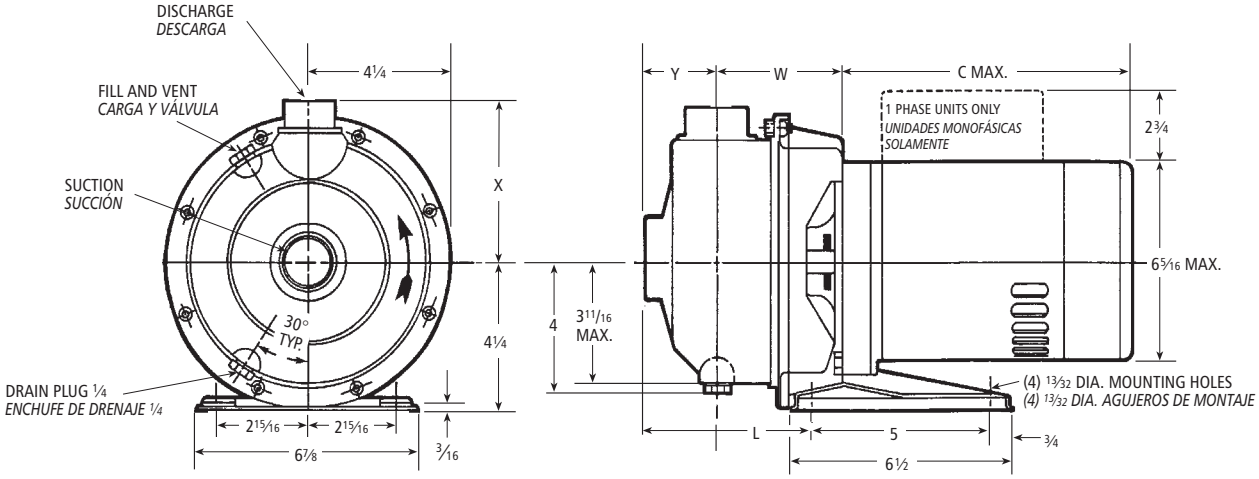

ODP and TEFC ½, ¾ and 1 HP (standard), *ODP y TEFC ½, ¾ y 1 HP (estándar)*

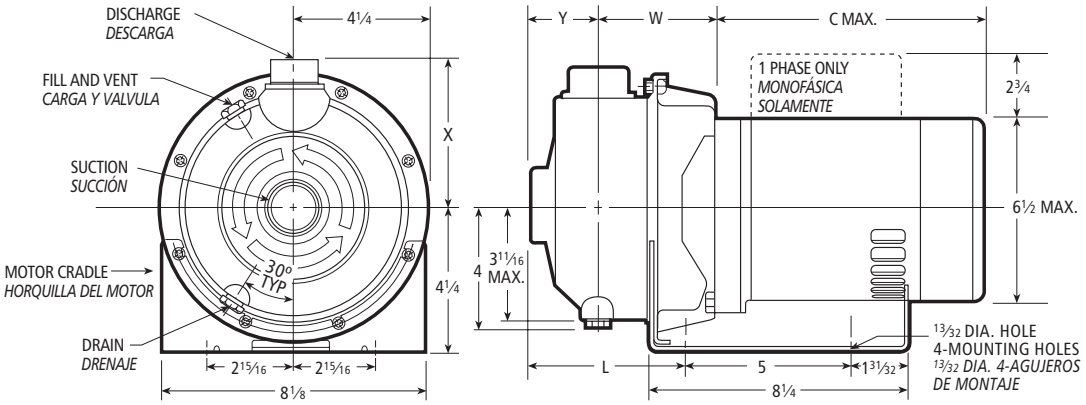

ODP and TEFC 1½, 2 and 3 HP (standard), *ODP y TEFC 1½, 2 y 3 HP (estándar)*

Specifications
Especificaciones

Capacities to:
85 GPM (322L/min) at 1750 RPM
170 GPM (643L/min) at 3500 RPM

Heads to:
39 feet (12 m) at 1750 RPM
150 feet (46 m) at 3500 RPM

Working pressures to:
125 PSIG (9 bars)

Maximum temperatures to:
250° F (121° C)

Direction of rotation:
Clockwise when viewed from motor end.

Motor specifications:
NEMA 56J frame, 1750 RPM, ½ HP. 3500 RPM ½ through 5 HP. Open drip-proof, totally enclosed fan-cooled or explosion proof enclosures. Stainless steel shaft with ball bearings.

Single phase: Voltage 115/230 ODP and TEFC. (3 and 5 HP model – 230 V only) Built-in overload with auto-reset provided.

Three phase: Voltage 208-230/460 ODP, TEFC and EX PROOF.

NOTE: For three phase motors, overload protection must be provided in starter unit. Starter and heaters must be ordered separately.

Capacidades:
85 GPM (322L/min) a 1750 RPM
170 GPM (643L/min) a 3500 RPM

Cargas:
39 pies (12 m) a 1750 RPM
150 pies (46 m) a 3500 RPM

Presión de trabajo:
125 PSIG (9 baras)

Temperatura máxima:
250° F (121° C)

Dirección de rotación:
En dirección de las agujas del reloj visto desde el extremo final del motor.

Motores:
Armazón 56J NEMA, 1750 RPM ½ HP. 3500 RPM ½ a 5 HP. Cubiertas abiertas resguardadas, totalmente encerradas enfriadas por ventilador o a prueba de explosiones. Eje de acero inoxidable con balineras de bolas.

Monofásicos: *Voltaje 115/230 ODP y TEFC. (modelo 3 y 5 HP – 230 voltios solamente) Se proporciona protección térmica contra sobrecarga construida con reseteo automático.*

Trifásicos: *Voltaje 208-230/460 ODP, TEFC y EX PROOF.*

NOTA: *Para motores trifásicos se debe de proporcionar la protección térmica contra sobrecarga en la unidad de arranque. El arrancador y los calentadores se deben pedir por separado.*

NPE Close Coupled with Footed Motor, Explosion-proof and 5 HP Motors
NPE Acople Cerrado con Motor con Patas, Motores a Prueba de Explosión Y 5 HP

All Explosion Proof Motors and 5 HP ODP and TEFC

Todos los motores son a prueba de explosiones, 5 HP, ODP (abiertos resguardados) y TEFC (totalmente encerrados con enfriamiento forzado)

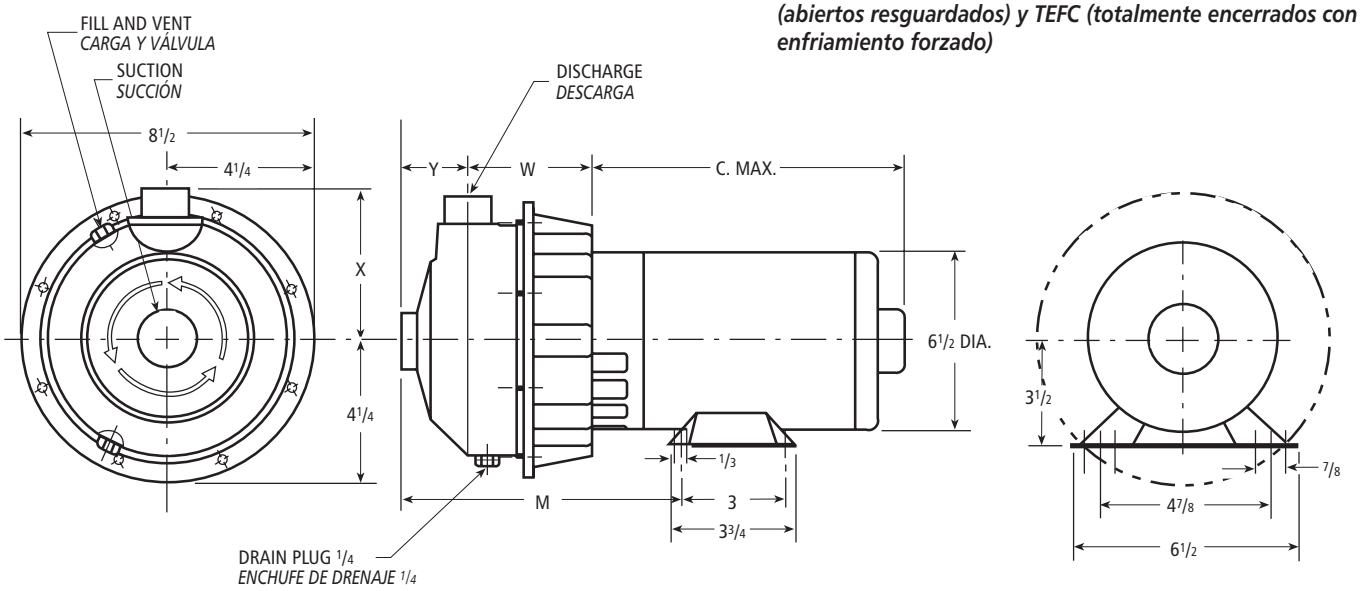

Dimensions – Determined by Pump, *Dimensiones – Determinadas por la Bomba*

Pump, *Bomba*	Suction, *Succión*	Discharge, *Descarga*	HP	W	X	Y	L	M
1ST	1¼	1	½ – 3	3 5/16	4⅜	2	4 9/16	7 5/16
2ST	1½	1¼	¾ – 5	3¾	4½	2⅛	5⅛	7⅞
3ST	2	1½	1 – 5	3¾	4⅝	2⅛	5⅛	7⅞

Available Motor Weights and Dimensions, *Pesos y Dimensiones Disponibles del Motor*

HP	Motor Weights, *Pesos del Motor*						C Max. Length, *(Longitud)*
	1 Phase, *Monofásicos*			3 Phase, *Trifásicos*			
	ODP	TEFC	EXP	ODP	TEFC	EXP	
½	16	21	47	19	18	27	9 15/16
¾	19	24	41	21	21	30	10¼
1	22	26	49	23	21	30	11
1½	28	35	56	27	27	37	11 5/16
2	33	39	60	32	33	44	12 1/16
3	40	43	—	41	37	—	12 7/16
5	42	—	—	42	45	—	14¼

Dimensions in inches, weights in pounds.
Dimensiones en pulgadas, pesos en libras.

NOTES:

1. Pump will be shipped with top vertical discharge position as standard. For other orientations, remove casing bolts, rotate discharge to desired position, replace and tighten 6mm bolts to 5 – 6 lbs.-ft.
2. Motor dimensions may vary with motor manufacturers.
3. Dimensions in inches, weights in pounds.
4. For explosion proof motor dimensions consult factory for information.
5. Not to be used for construction purposes unless certified.

NOTAS:

1. *Las bombas se transportarán con la descarga vertical superior como estándar. Para otras orientaciones, retirar los tornillos de la carcasa, rotar la descarga a la posición deseada, y reemplazar y apretar los tornillos de 6mm a 5 – 6 libras-pies.*
2. *Las dimensiones del motor puede que varíen con los fabricantes.*
3. *Dimensiones en pulgadas, pesos en libras.*
4. *Para las dimensiones de los motores a prueba de explosión consultar con la fábrica para información.*
5. *No usar para propósitos de construcción sin certificar.*

NPE Frame Mounted – Dimensions, Weights and Specifications
NPE Armazón Montado – Dimensiones, Pesos y Especificaciones

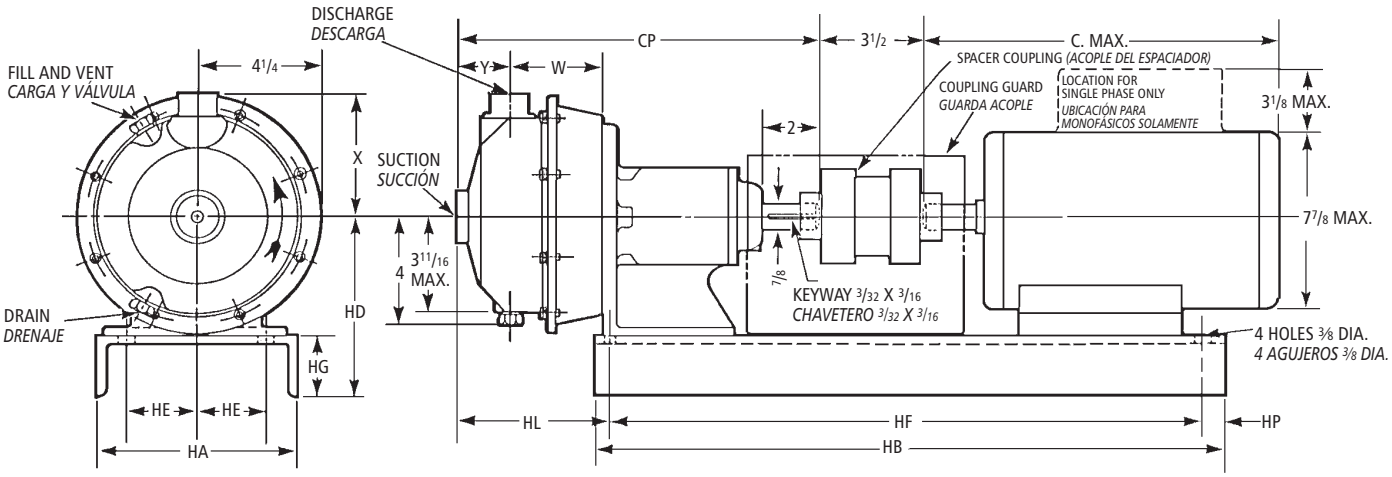

Specifications
Especificaciones

Capacities to:
85 GPM (322L/min) at 1750 RPM
170 GPM (643L/min) at 3500 RPM

Heads to:
39 feet (12 m) at 1750 RPM
150 feet (47 m) at 3500 RPM

Working pressures to:
125 PSIG (9 bars)

Maximum temperatures to:
250°F (121°C)

Direction of rotation:
Clockwise when viewed from motor end.

Motor specifications:
T-frame single and three phase. Open drip-proof, TEFC or explosion proof enclosures are available for 60 Hz, 3500 and 1750 RPM operation.

For three phase motors, overload protection must be provided in starter unit. Starter and heaters must be ordered separately.

Capacidades:
85 GPM (322L/min) a 1750 RPM
170 GPM (643L/min) a 3500 RPM

Cargas:
39 pies (12 m) a 1750 RPM
150 pies (47 m) a 3500 RPM

Presión de trabajo:
125 PSIG (9 baras)

Temperatura máxima:
250°F (121°C)

Dirección de rotación:
En dirección de las agujas del reloj visto desde el extremo final del motor.

Motores:
Armazón T- monofásico y trifásico. A prueba de goteo, TEFC o recintos a prueba de explosión están disponibles para funcionamiento de 60 Hz, 3500 y 1750 RPM.

Para motores trifásicos se debe de proporcionar la protección térmica contra sobrecarga en la unidad de arranque. El arrancador y los calentadores se deben pedir por separado.

NPE-F

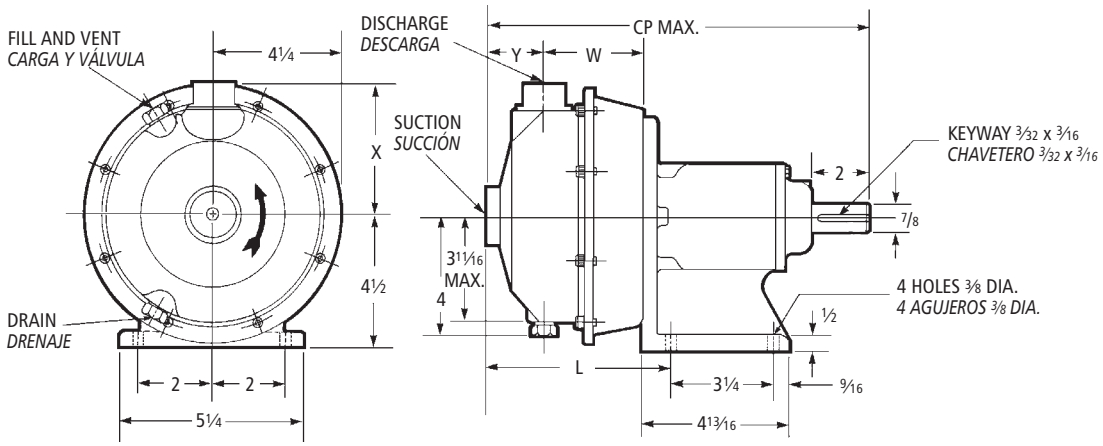

Dimensions and Weights – Determined by Pump,
Dimensiones y Pesos – Determinados por la Bomba

Pump, *Bomba*	Suct. NPT, *Succión NPT*	Disch. NPT, *Descarga NPT*	CP	L	W	X	Y	Wt., *Peso*	Dim. "HL" Determined by Pump and Motor, *Dim. "HL" Determinadas por la Bomba y el Motor* Frame, *Armazón* 56	140	180
1ST	1 1/4	1	12 15/16	6 7/16	3 5/16	4 3/8	2	22 1/2	4 9/16		6 7/16
2ST	1 1/2	1 1/4	13 1/2	7	3 3/4	4 1/2	2 1/8	23	5 1/8		7
3ST	2	1 1/2				4 5/8					

Available Motor and Bedplate Dimensions and Weights,
Pesos y Dimensiones Disponibles de la Fundación y del Motor

Motor Frame, *Armazón del Motor*	HA	HB	HD	HE	HF	HG	HP	Wt. Max., *Peso Máx*	Shims, *Deflector*
56 143T 145T	8	26	6 7/8	3 1/8	22 3/8	2 3/8	1	30	1"
182T 184T	10	26	7 1/4	3 3/4	24	2 3/4	7/8	43	—

NOTES:

1. Pump will be shipped with top vertical discharge position as standard. For other orientations, remove casing bolts, rotate discharge to desired position, replace and tighten 6mm bolts to 5 – 6 lbs.-ft.
2. Motor dimensions may vary with motor manufacturers.
3. Dimensions in inches, weights in pounds.
4. For explosion proof motor dimensions consult factory for information.
5. Not to be used for construction purposes unless certified.

NOTAS:

1. *Las bombas se transportarán con la descarga vertical superior como estándar. Para otras orientaciones, retirar los tornillos de la carcasa, rotar la descarga a la posición deseada, y reemplazar y apretar los tornillos de 6mm a 5 – 6 libras-pies.*
2. *Las dimensiones del motor puede que varíen con los fabricantes.*
3. *Dimensiones en pulgadas, pesos en libras.*
4. *Para las dimensiones de los motores a prueba de explosión consultar con la fábrica para información.*
5. *No usar para propósitos de construcción sin certificar.*

Frame Size, *Tamaño del Armazón*	Horsepower, *Fuerza* 3500 RPM Single Phase, *Monofásicos* ODP	TEFC	Three Phase, *Trifásicos* ODP	TEFC	C Max.	Wt. Max., *Peso Máx.*
56	1/2 – 1 1/2	1/2 – 1 1/2	1/2 – 1	1/2 – 1	13	45
143T	—	—	1 1/2	1 1/2	13 3/8	45
145T	2	2	1 1/2 – 3	1 1/2 – 2	14 1/4	52
182T	3	3	5	3	16 5/8	63
184T	5	5	—	5	18 1/8	112

ITT

Commercial Water

Typical Applications, *Aplicaciones Típicas*

Specifically designed for a broad range of general applications traditionally requiring various materials such as all iron, bronze fitted or all bronze construction.

- Water circulation
- Booster service
- Liquid transfer
- Spray system
- Chillers
- Washing/cleaning systems
- Injection molding cooling
- Reverse osmosis
- Air scrubbers
- Heat exchangers
- Filtration systems
- Jockey pumps
- OEM applications
- General water services

Diseñadas específicamente para una amplia variedad de aplicaciones generales, requiriendo tradicionalmente varios materiales, tales como hierro, bronce empotrado o todas las construcciones de bronce.

- *Circulación de agua*
- *Aumento de presión*
- *Transferencia de líquidos*
- *Sistemas de aspersión*
- *Enfriadores*
- *Sistemas de lavado/limpieza*
- *Enfriamiento con molde por inyección*
- *Osmosis reversa*
- *Depuradores de aire*
- *Termopermutadores*
- *Sistemas de filtración*
- *Bombas auxiliares*
- *Aplicaciones OEM*
- *Servicios generales de agua*

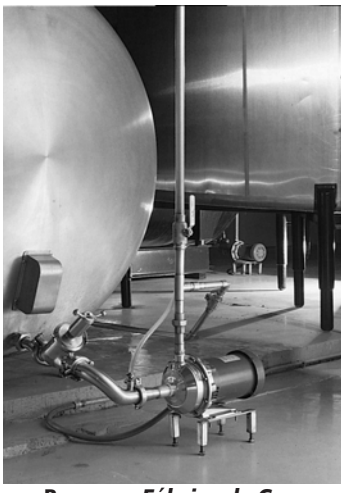

Brewery, *Fábrica de Cerveza*

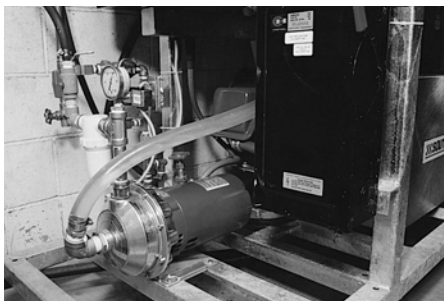

Car Wash, *Lavadero de Autos*

Pure Water/ OEM, *Agua Pura/ OEM*

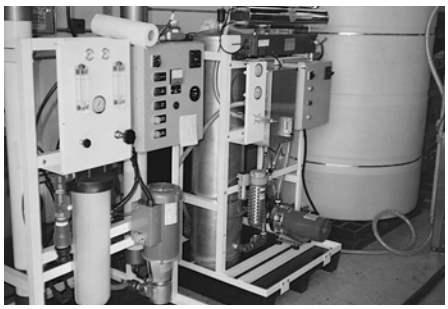

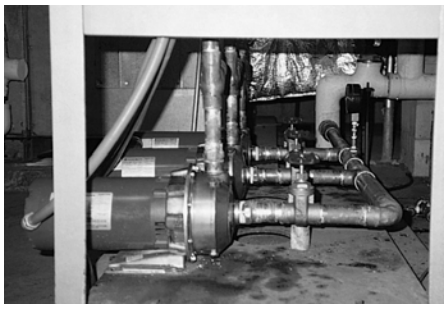

Pressure Booster System, *Sistema de Aumento de Presión*

Chiller, *Enfriador*

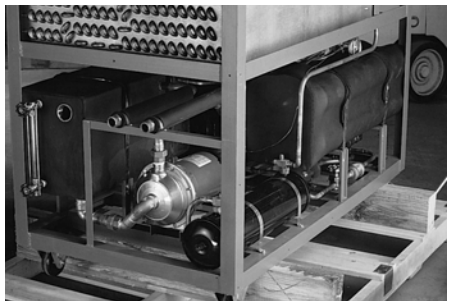

GOULDS PUMPS

Goulds Pumps, G&L and the ITT Engineered Blocks Symbol are registered trademarks and tradenames of ITT Corporation.

SPECIFICATIONS ARE SUBJECT TO CHANGE WITHOUT NOTICE.

Goulds Pumps, G&L y el símbolo ITT Engineered Blocks son marcas registradas y marcas comerciales de ITT Corporation.

LAS ESPECIFICACIONES ESTÁN SUJETAS A CAMBIO SIN PREVIO AVISO.

BNPE June, 2008

Junio, 2008

© 2008 ITT Corporation

Engineered for life

FLOW MONITORING INSTRUMENTS

DWYER DS-300 FLOW SENSOR

AND

DWYER SERIES 2000 MAGNEHELIC GAUGE

AND

DWYER SERIES MS MAGNESENSE

Series DS-300 Flow Sensors

Installation and Operating Instructions Flow Calculations

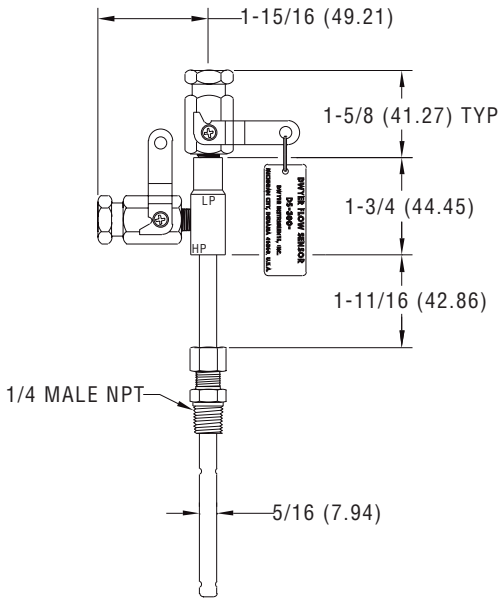

Series DS-300 Flow Sensors are averaging pitot tubes that provide accurate, convenient flow rate sensing. When purchased with a Dwyer Capsuhelic® for liquid flow or Magnehelic® for air flow, differential pressure gage of appropriate range, the result is a flow-indicating system delivered off the shelf at an economical price. Series DS-300 Flow Sensors are designed to be inserted in the pipeline through a compression fitting and are furnished with instrument shut-off valves on both pressure connections. Valves are fitted with 1/8″ female NPT connections. Accessories include adapters with 1/4″ SAE 45° flared ends compatible with hoses supplied with the Model A-471 Portable Capsuhelic® kit. Standard valves are rated at 200°F (93.3°C). Where valves are not required, they can be omitted at reduced cost. Series DS-300 Flow Sensors are available for pipe sizes from 1″ to 10″.

INSPECTION

Inspect sensor upon receipt of shipment to be certain it is as ordered and not damaged. If damaged, contact carrier.

INSTALLATION

General - The sensing ports of the flow sensor must be correctly positioned for measurement accuracy. The instrument connections on the sensor indicate correct positioning. The side connection is for total or high pressure and should be pointed upstream. The top connection is for static or low pressure.

Location - The sensor should be installed in the flowing line with as much straight run of pipe upstream as possible. A rule of thumb is to allow 10 - 15 pipe diameters upstream and 5 downstream. The table below lists recommended up and down piping.

PRESSURE AND TEMPERATURE

Maximum: 200 psig (13.78 bar) at 200°F (93.3°C).

Upstream and Downstream Dimensions in Terms of Internal Diameter of Pipe*

Upstream Condition	Minimum Diameter of Straight Pipe		
	Upstream		Downstream
	In-Plane	Out of Plane	
One Elbow or Tee	7	9	5
Two 90° Bends in Same Plane	8	12	5
Two 90° Bends in Different Plane	18	24	5
Reducers or Expanders	8	8	5
All Valves**	24	24	5

* Values shown are recommended spacing, in terms of internal diameter for normal industrial metering requirements. For laboratory or high accuracy work, add 25% to values.

** Includes gate, globe, plug and other throttling valves that are only partially opened. If valve is to be fully open, use values for pipe size change. **CONTROL VALVES SHOULD BE LOCATED AFTER THE FLOW SENSOR.**

DWYER INSTRUMENTS, INC.
P.O. BOX 373 • MICHIGAN CITY, INDIANA 46361, U.S.A.
Phone: 219/879-8000 www.dwyer-inst.com
Fax: 219/872-9057 e-mail: info@dwyer-inst.com

POSITION

Be certain there is sufficient clearance between the mounting position and other pipes, walls, structures, etc, so that the sensor can be inserted through the mounting unit once the mounting unit has been installed onto the pipe.

Flow sensors should be positioned to keep air out of the instrument connecting lines on liquid flows and condensate out of the lines on gas flows. The easiest way to assure this is to install the sensor into the pipe so that air will bleed into, or condensate will drain back to, the pipe.

For Air or Gas Flow

Install in upper quadrant of pipe

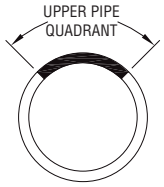

Condensate drains back to pipe

For Liquid or Steam Flow

Install in lower quadrant of pipe

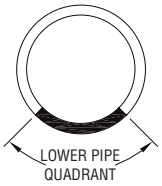

Air bleeds back to pipe

INSTALLATION

1. When using an A-160 thred-o-let, weld it to the pipe wall. If replacing a DS-200 unit, an A-161 bushing (1/4˝ x 3/8˝) will be needed.

2. Drill through center of the thred-o-let into the pipe with a drill that is slightly larger than the flow sensor diameter.

3. Install the packing gland using proper pipe sealant. If the packing gland is disassembled, note that the tapered end of the ferrule goes into the fitting body.

4. Insert sensor until it bottoms against opposite wall of the pipe, then withdraw 1/16˝ to allow for thermal expansion.

5. Tighten packing gland nut finger tight. Then tighten nut with a wrench an additional 1-1/4 turns. Be sure to hold the sensor body with a second wrench to prevent the sensor from turning.

INSTRUMENT CONNECTION

Connect the slide pressure tap to the high pressure port of the Magnehelic® (air only) or Capsuhelic® gage or transmitting instrument and the top connection to the low pressure port.

See the connection schematics below.

Bleed air from instrument piping on liquid flows. Drain any condensate from the instrument piping on air and gas flows.

Open valves to instrument to place flow meter into service. For permanent installations, a 3-valve manifold is recommended to allow the gage to be zero checked without interrupting the flow. The Dwyer A-471 Portable Test Kit includes such a device.

Water Flow

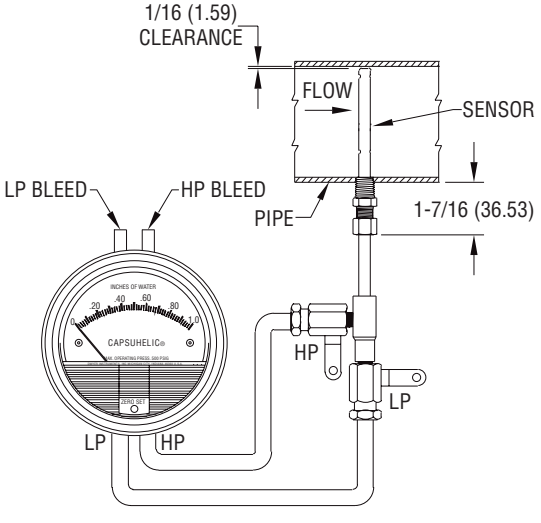

Air or Gas Flow

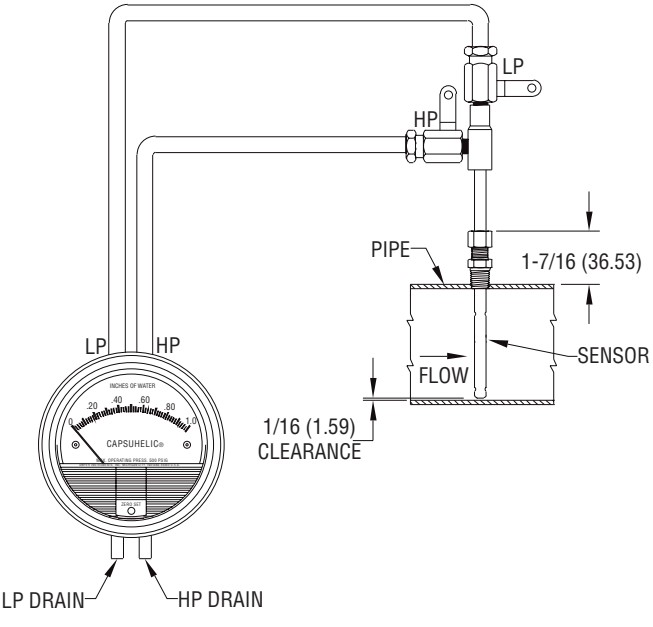

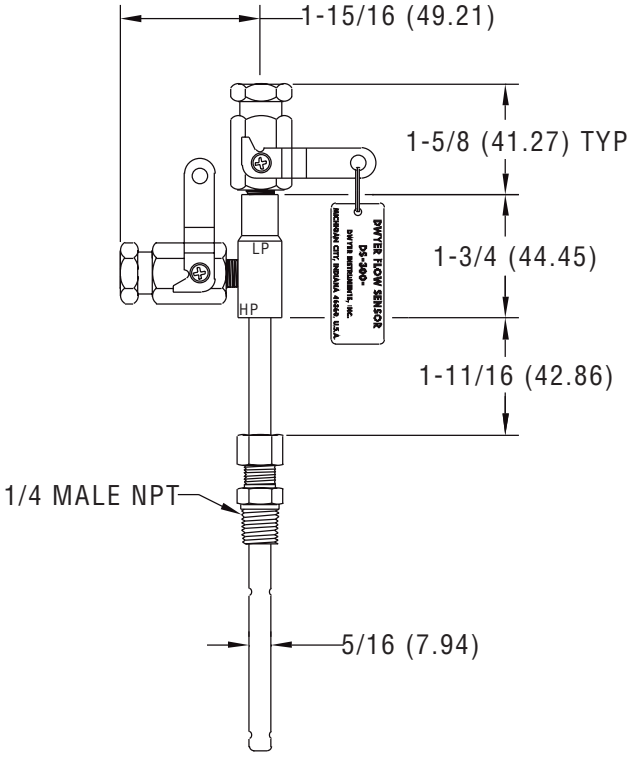

Flow Calculations and Charts

The following information contains tables and equations for determining the differential pressure developed by the DS-300 Flow Sensor for various flow rates of water, steam, air or other gases in different pipe sizes.

This information can be used to prepare conversion charts to translate the differential pressure readings being sensed into the equivalent flow rate. When direct readout of flow is required, use this information to calculate the full flow differential pressure in order to specify the exact range of Dwyer Magnehelic® or Capsuhelic® gage required. Special ranges and calculations are available for these gages at minimal extra cost. See bulletins A-30 and F-41 for additional information on Magnehelic® and Capsuhelic® gages and DS-300 flow sensors.

For additional useful information on making flow calculations, the following service is recommended: Crane Valve Co. Technical Paper No. 410 “Flow of Fluids Through Valves, Fittings and Pipe.” It is available from Crane Valve Company, www.cranevalve.com.

Using the appropriate differential pressure equation from Page 4 of this bulletin,calculate the differential pressure generated by the sensor under normal operating conditions of the system. Check the chart below to determine if this value is within the recommended operating range for the sensor. Note that the data in this chart is limited to standard conditions of air at 60°F (15.6°C) and 14.7 psia static line pressure or water at 70°F (21.1°C). To determine recommended operating ranges of other gases, liquids an/or operating conditions, consult factory.

Note: the column on the right side of the chart which defines velocity ranges to avoid. Continuous operation within these ranges can result in damage to the flow sensor caused by excess vibration.

Pipe Size (Schedule 40)	Flow Coefficient “K”	Operating Ranges Air @ 60°F & 14.7 psia (D/P in. W.C.)	Operating Ranges Water @ 70°F (D/P in. W.C.)	Velocity Ranges Not Recommended (Feet per Second)
1	0.52	1.10 to 186	4.00 to 675	146 to 220
1-1/4	0.58	1.15 to 157	4.18 to 568	113 to 170
1-1/2	0.58	0.38 to 115	1.36 to 417	96 to 144
2	0.64	0.75 to 75	2.72 to 271	71 to 108
2-1/2	0.62	1.72 to 53	6.22 to 193	56 to 85
3	0.67	0.39 to 35	1.43 to 127	42 to 64
4	0.67	0.28 to 34	1.02 to 123	28 to 43
6	0.71	0.64 to 11	2.31 to 40	15 to 23
8	0.67	0.10 to 10	0.37 to 37	9.5 to 15
10	0.70	0.17 to 22	0.60 to 79	6.4 to 10

FLOW EQUATIONS

1. Any Liquid

$$Q\ (GPM) = 5.668 \times K \times D^2 \times \sqrt{\Delta P / S_f}$$

2. Steam or Any Gas

$$Q\ (lb/Hr) = 359.1 \times K \times D^2 \times \sqrt{p \times \Delta P}$$

3. Any Gas

$$Q\ (SCFM) = 128.8 \times K \times D^2 \times \sqrt{\frac{P \times \Delta P}{(T + 460) \times S_s}}$$

DIFFERENTIAL PRESSURE EQUATIONS

1. Any Liquid

$$\Delta P\ (in.\ WC) = \frac{Q^2 \times S_f}{K^2 \times D^4 \times 32.14}$$

2. Steam or Any Gas

$$\Delta P\ (in.\ WC) = \frac{Q^2}{K^2 \times D^4 \times p \times 128{,}900}$$

3. Any Gas

$$\Delta P\ (in.\ WC) = \frac{Q^2 \times S_s \times (T + 460)}{K^2 \times D^4 \times P \times 16{,}590}$$

Technical Notations

The following notations apply:

ΔP = Differential pressure expressed in inches of water column
Q = Flow expressed in GPM, SCFM, or PPH as shown in equation
K = Flow coefficient— See values tabulated on Pg. 3.
D = Inside diameter of line size expressed in inches.

For square or rectangular ducts, use: $D = \sqrt{\frac{4 \times \text{Height} \times \text{Width}}{\pi}}$

P = Static Line pressure (psia)
T = Temperature in degrees Fahrenheit (plus 460 = °Rankine)
p = Density of medium in pounds per square foot
S_f = Sp Gr at flowing conditions
S_s = Sp Gr at 60°F (15.6°C)

SCFM TO ACFM EQUATION

$$SCFM = ACFM \times \left(\frac{14.7 + PSIG}{14.7}\right) \left(\frac{520^*}{460 + °F}\right)$$

$$ACFM = SCFM \times \left(\frac{14.7}{14.7 + PSIG}\right) \left(\frac{460 + °F}{520}\right)$$

$$\text{POUNDS PER CUBIC FOOT STD.} = \text{POUNDS PER CUBIC FOOT ACT.} \times \left(\frac{14.7}{14.7 + PSIG}\right) \left(\frac{460 + °F}{520^*}\right)$$

$$\text{POUNDS PER CUBIC FOOT ACT.} = \text{POUNDS PER CUBIC FOOT STD.} \times \left(\frac{14.7 + PSIG}{14.7}\right) \left(\frac{520^*}{460 + °F}\right)$$

1 Cubic foot of air = 0.076 pounds per cubic foot at 60° F (15.6°C) and 14.7 psia.
* (520°= 460 + 60°) Std. Temp. Rankine

©Copyright 2004 Dwyer Instruments, Inc.
Printed in U.S.A. 7/04 FR# 72-440451-01 Rev. 2

DWYER INSTRUMENTS, INC.
P.O. BOX 373 • MICHIGAN CITY, INDIANA 46361, U.S.A.
Phone: 219/879-8000 www.dwyer-inst.com
Fax: 219/872-9057 e-mail: info@dwyer-inst.com

Series 2000

Magnehelic® Differential Pressure Gages

Indicate Positive, Negative or Differential, Accurate within 2%

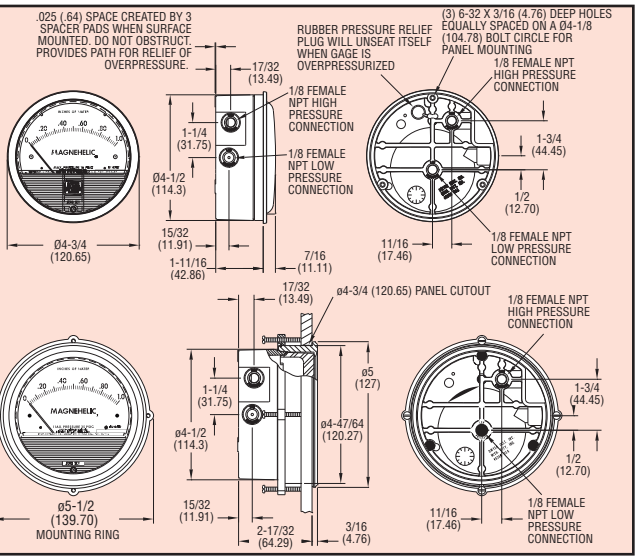

Select the Dwyer® Magnehelic® gage for high accuracy – guaranteed within 2% of full scale – and for the wide choice of 81 models available to suit your needs precisely. Using Dwyer's simple, frictionless Magnehelic® gage movement, it quickly indicates low air or non-corrosive gas pressures – either positive, negative (vacuum) or differential. The design resists shock, vibration and over-pressures. No manometer fluid to evaporate, freeze or cause toxic or leveling problems. It's inexpensive, too.

The Magnehelic® gage is the industry standard to measure fan and blower pressures, filter resistance, air velocity, furnace draft, pressure drop across orifice plates, liquid levels with bubbler systems and pressures in fluid amplifier or fluidic systems. It also checks gas-air ratio controls and automatic valves, and monitors blood and respiratory pressures in medical care equipment.

Note: May be used with hydrogen. Order a Buna-N diaphragm. Pressures must be less than 35 psi.

Flush, Surface or Pipe Mounted

Mounting
A single case size is used for most models of Magnehelic® gages. They can be flush or surface mounted with standard hardware supplied. With the optional **A-610** Pipe Mounting Kit they may be conveniently installed on horizontal or vertical 1-1/4″ - 2″ pipe. Although calibrated for vertical position, many ranges above 1″ may be used at any angle by simply re-zeroing. However, for maximum accuracy, they must be calibrated in the same position in which they are used. These characteristics make Magnehelic® gages ideal for both stationary and portable applications. A 4-9/16″ hole is required for flush panel mounting. Complete mounting and connection fittings plus instructions are furnished with each instrument.

Vent Valves
In applications where pressure is continuous and the Magnehelic® gage is connected by metal or plastic tubing which cannot be easily removed, we suggest using Dwyer A-310A vent valves to connect gage. Pressure can then be removed to check or re-zero the gage.

High and Medium Pressure Models
Installation is similar to standard gages except that a 4-13/16″ hole is needed for flush mounting. The medium pressure construction is rated for internal pressures up to 35 psig and the high pressure up to 80 psig. Available for all models. Because of larger case, the medium pressure and high pressure models will not fit in a portable case size. Installation of the A-321 safety relief valve on standard Magnehelic® gages often provides adequate protection against infrequent overpressure.
ⓘ See Note.

SPECIFICATIONS
Service: Air and non-combustible, compatible gases (natural gas option available).
Wetted Materials: Consult factory.
Housing: Die cast aluminum case and bezel, with acrylic cover. Exterior finish is coated gray to withstand 168 hour salt spray corrosion test.
Accuracy: ±2% of full scale (±3% on - 0, -100 Pa, -125 Pa, 10MM and ±4% on - 00, -60 Pa, -6MM ranges), throughout range at 70°F (21.1°C).
Pressure Limits: -20″ Hg to 15 psig† (-0.677 to 1.034 bar); MP option: 35 psig (2.41 bar); HP option: 80 psig (5.52 bar).
Overpressure: Relief plug opens at approximately 25 psig (1.72 bar), standard gages only. See Overpressure Protection Note on next page.
Temperature Limits: 20 to 140°F* (-6.67 to 60°C).
Size: 4″ (101.6 mm) diameter dial face.
Mounting Orientation: Diaphragm in vertical position. Consult factory for other position orientations.
Process Connections: 1/8″ female NPT duplicate high and low pressure taps - one pair side and one pair back.
Weight: 1 lb 2 oz (510 g), MP & HP 2 lb 2 oz (963 g).
Standard Accessories: Two 1/8″ NPT plugs for duplicate pressure taps, two 1/8″ pipe thread to rubber tubing adapter and three flush mounting adapters with screws. (Mounting and snap ring retainer substituted for 3 adapters in MP & HP gage accessories.)

*Low temperature models available as special option.
†For applications with high cycle rate within gage total pressure rating, next higher rating is recommended. See Medium and High pressure options at lower left.

OPTIONS AND ACCESSORIES

Transparent Overlays
Furnished in red and green to highlight and emphasize critical pressures.

Adjustable Signal Flag
Integral with plastic gage cover. Available for most models except those with medium or high pressure construction. Can be ordered with gage or separate.
Add suffix **-ASF** to end of gage model number

LED Setpoint Indicator
Bright red LED on right of scale shows when setpoint is reached. Field adjustable from gage face, unit operates on 12-24 VDC. Requires MP or HP style cover and bezel.
ⓘ See Note.
Add suffix **-SP** to end of gage model number

Quality design and construction features

Bezel provides flange for flush mounting in panel.

Clear plastic face is highly resistant to breakage. Provides undistorted viewing of pointer and scale.

Precision litho-printed scale is accurate and easy to read.

Red tipped pointer of heat treated aluminum tubing is easy to see. It is rigidly mounted on the helix shaft.

Pointer stops of molded rubber prevent pointer over-travel without damage.

"Wishbone" assembly provides mounting for helix, helix bearings and pointer shaft.

Jeweled bearings are shock-resistant mounted; provide virtually friction-free motion for helix. Motion damped with high viscosity silicone fluid.

Zero adjustment screw is conveniently located in the plastic cover, and is accessible without removing cover. O-ring seal provides pressure tightness.

Helix is precision made from an alloy of high magnetic permeability. Mounted in jeweled bearings, it turns freely, following the magnetic field to move the pointer across the scale.

Calibrated range spring is flat spring steel. Small amplitude of motion assures consistency and long life. It reacts to pressure on diaphragm. Live length adjustable for calibration.

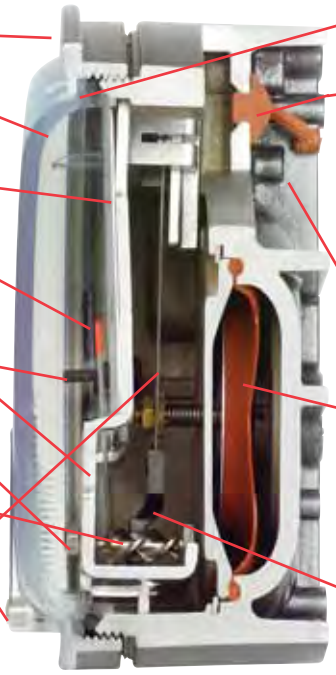

O-ring seal for cover assures pressure integrity of case.

OVERPRESSURE PROTECTION

Blowout plug is comprised of a rubber plug on the rear which functions as a relief valve by unseating and venting the gage interior when over pressure reaches approximately 25 psig (1.7 bar). To provide a free path for pressure relief, there are four spacer pads which maintain 0.023 inch clearance when gage is surface mounted. Do not obstruct the gap created by these pads.

The blowout plug is not used on models above 180 inches of water pressure, medium or high pressure models, or on gages which require an elastomer other than silicone for the diaphragm.

The blowout plug should not be used as a system overpressure control. High supply pressures may still cause the gage to fail due to over pressurization, resulting in property damage or serious injury. Good engineering practices should be utilized to prevent your system from exceeding the ratings or any component.

Die cast aluminum case is precision made and iridite-dipped to withstand 168 hour salt spray corrosion test. Exterior finished in baked dark gray hammerloid. One case size is used for all standard pressure options, and for both surface and flush mounting.

Silicone rubber diaphragm with integrally molded O-ring is supported by front and rear plates. It is locked and sealed in position with a sealing plate and retaining ring. Diaphragm motion is restricted to prevent damage due to overpressures.

Samarium Cobalt magnet mounted at one end of range spring rotates helix without mechanical linkages.

Series 2000 Magnehelic® Gage — Models and Ranges

Page VI shows examples of special models built for OEM customers. For special scales furnished in ounces per square inch, inches of mercury, metric units, square root scales for volumetric flow, etc., contact the factory.

Model	Range Inches of Water
2000-00N†••	.05-0-.2
2000-00†••	0-.25
2000-0†•	0-.50
2001	0-1.0
2002	0-2.0
2003	0-3.0
2004	0-4.0
2005	0-5.0
2006	0-6.0
2008	0-8.0
2010	0-10
2012	0-12
2015	0-15
2020	0-20
2025	0-25
2030	0-30
2040	0-40
2050	0-50
2060	0-60
2080	0-80
2100	0-100
2120	0-120
2150	0-150
2160	0-160
2180*	0-180
2250*	0-250
Zero Center Ranges	
2300-00†••	0.125-0-0.125
2300-0†•	.25-0-.25
2301	.5-0-.5
2302	1-0-1
2304	2-0-2
2310	5-0-5
2320	10-0-10
2330	15-0-15

Model	Range PSI
2201	0-1
2202	0-2
2203	0-3
2204	0-4
2205	0-5
2210*	0-10
2215*	0-15
2220*	0-20
2230**	0-30

Model	Range, CM of Water
2000-15CM	0-15
2000-20CM	0-20
2000-25CM	0-25
2000-50CM	0-50
2000-80CM	0-80
2000-100CM	0-100
2000-150CM	0-150
2000-200CM	0-200
2000-250CM	0-250
2000-300CM	0-300
Zero Center Ranges	
2300-4CM	2-0-2
2300-10CM	5-0-5
2300-30CM	15-0-15

†These ranges calibrated for vertical scale position.
• Accuracy +/-3%
• • Accuracy +/-4%
*MP option standard
**HP option standard

Model	Range MM of Water
2000-6MM†••	0-6
2000-10MM†•	0-10
2000-15MM	0-15
2000-25MM	0-25
2000-30MM	0-30
2000-50MM	0-50
2000-80MM	0-80
2000-100MM	0-100
2000-125MM	0-125
2000-150MM	0-150
2000-200MM	0-200
2000-250MM	0-250
2000-300MM	0-300
Zero Center Ranges	
2300-6MM†••	3-0-3
2300-10MM†•	5-0-5
2300-20MM†•	10-0-10
Model	**Range, Pa**
2000-60NPA†••	10-0-50
2000-60PA†••	0-60
2000-100PA†•	0-100
2000-125PA†•	0-125
2000-250PA	0-250
2000-300PA	0-300
2000-500PA	0-500
2000-750PA	0-750
2000-1000PA	0-100 x 10
Zero Center Ranges	
Model	**Range, Pa**
2300-60PA†••	30-0-30
2300-100PA†•	50-0-50
2300-120PA	60-0-60
2300-200PA	100-0-100
2300-250PA	125-0-125
2300-300PA	150-0-150
2300-500PA	250-0-250
2300-1000PA	500-0-500

Model	Range, kPa
2000-0.5KPA	0-0.5
2000-1KPA	0-1
2000-1.5KPA	0-1.5
2000-2KPA	0-2
2000-2.5KPA	0-2.5
2000-3KPA	0-3
2000-4KPA	0-4
2000-5KPA	0-5
2000-8KPA	0-8
2000-10KPA	0-10
2000-15KPA	0-15
2000-20KPA	0-20
2000-25KPA	0-25
2000-30KPA	0-30
Zero Center Ranges	
2300-1KPA	.5-0-.5
2300-2KPA	1-0-1
2300-2.5KPA	1.25-0-1.25
2300-3KPA	1.5-0-1.5

Dual Scale Air Velocity Units
For use with pitot tube

Model	Range in W.C./ Velocity F.P.M.
2000-00AV†••	0-.25/300-2000
2000-0AV†•	0-.50/500-2800
2001AV	0-1.0/500-4000
2002AV	0-2.0/1000-5600
2005AV	0-5.0/2000-8800
2010AV	0-10/2000-12500

Dual Scale English/Metric Models

Model	Range, In. W.C.	Range, Pa or kPa
2000-OOD†••	0-.25	0-62 Pa
2000-OD†•	0-0.5	0-125 Pa
2001D	0-1.0	0-250 Pa
2002D	0-2.0	0-500 Pa
2003D	0-3.0	0-750 Pa
2004D	0-4.0	0-1.0 kPa
2005D	0-5.0	0-1.25 kPa
2006D	0-6.0	0-1.5 kPa
2008D	0-8.0	0-2.0 kPa
2010D	0-10	0-2.5 kPa
2015D	0-15	0-3.7 kPa
2020D	0-20	0-5 kPa
2025D	0-25	0-6.2 kPa
2050D	0-50	0-12.4 kPa
2060D	0-60	0-15 kPa

ACCESSORIES
A-299, Surface Mounting Bracket
A-300, Flat Flush Mounting Bracket
A-310A, 3-Way Vent Valve
A-321, Safety Relief Valve
A-432, Portable Kit
A-448, 3-piece magnet kit for mounting Magnehelic® gage directly to magnetic surface
A-605, Air Filter Kit
A-610, Pipe Mount Kit

OPTIONS — To order, add suffix: I.E. 2001-ASF
ASF, Adjustable Signal Flag
HP, High Pressure Option
LT, Low Temperatures to -20°F
MP, Med. Pressure Option
SP, Setpoint Indicator
Scale Overlays, Red, Green, Mirrored or Combination, Specify Locations

Bulletin A-27

Magnehelic® Differential Pressure Gage

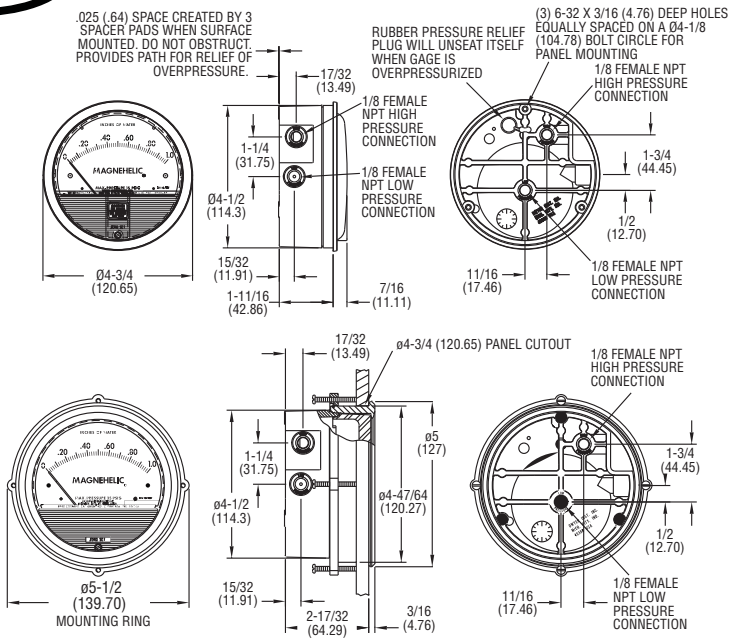

**The blowout plug is not used on models above 180 inches of water pressure, medium or high pressure models, or on gages which require an elastomer other than silicone for the diaphragm.*

STANDARD GAGE ACCESSORIES: Two 1/8″ NPT plugs for duplicate pressure taps, two 1/8″ pipe thread to rubber tubing adapters and three flush mounting adapters with screws.

MP AND HP GAGE ACCESSORIES: Mounting ring and snap ring retainer substituted for 3 adaptors, 1/4" compression fittings replace 1/8" pipe thread to rubber tubing adaptors.

OVERPRESSURE PROTECTION: Standard Magnehelic® Differential Pressure Gages are rated for a maximum pressure of 15 psig and should not be used where that limit could be exceeded. Models employ a rubber plug on the rear which functions as a relief valve by unseating and venting the gage interior when over pressure reaches approximately 25 psig (excludes MP and HP models). To provide a free path for pressure relief, there are four spacer pads which maintain .023″ clearance when gage is surface mounted. Do not obstruct the gap created by these pads.

SPECIFICATIONS

Service: Air and non-combustible, compatible gases. (Natural Gas option available.)
Wetted Materials: Consult factory.
Housing: Die cast aluminum case and bezel, with acrylic cover. (MP model has polycarbonate cover).
Accuracy: ±2% of full scale (±3% on - 0, -100 Pa, -125 Pa, 10MM and ±4% on -00, - 00N, -60 Pa, -6MM ranges), throughout range at 70°F (21.1°C).
Pressure Limits: -20″ Hg to 15 psig.† (-0.677 bar to 1.034 bar); MP option: 35 psig (2.41 bar), HP option: 80 psig (5.52 bar).
Overpressure: Relief plug opens at approximately 25 psig (1.72 bar), standard gages only. The blowout plug is not used on models above 180 inches of water pressure, medium or high pressure models, or on gages which require an elastomer other than silicone for the diaphragm.
Temperature Limits: 20 to 140°F (-6.67 to 60°C). *Low temperature models available as special option.
Size: 4″ (101.6 mm) diameter dial face.
Mounting Orientation: Diaphragm in vertical position. Consult factory for other position orientations.
Process Connections: 1/8″ female NPT duplicate high and low pressure taps - one pair side and one pair back.
Weight: 1 lb 2 oz (510 g), MP & HP 2 lb 2 oz (963 g).

†For applications with high cycle rate within gage total pressure rating, next higher rating is recommended. See Medium and High pressure options.

Note: May be used with hydrogen when ordering Buna-N diaphragm. Pressure must be less than 35 psi.

INSTALLATION

Select a location free from excessive vibration and where the ambient temperature will not exceed 140°F (60°C). Also, avoid direct sunlight which accelerates discoloration of the clear plastic cover. Sensing lines may be run any necessary distance. Long tubing lengths will not affect accuracy but will increase response time slightly. Do not restrict lines. If pulsating pressures or vibration cause excessive pointer oscillation, consult the factory for ways to provide additional damping.
All standard Magnehelic® Differential Pressure Gages are calibrated with the diaphragm vertical and should be used in that position for maximum accuracy. If gages are to be used in other than vertical position, this should be specified on the order. Many higher range gages will perform within tolerance in other positions with only rezeroing. Low range models of 0.5" w.c. plus 0.25" w.c. and metric equivalents must be used in the vertical position only.

SURFACE MOUNTING

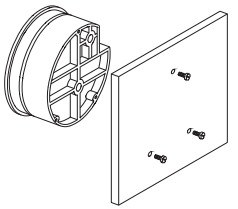

Locate mounting holes, 120° apart on a 4-1/8" dia. circle. Use No. 6-32 machine screws of appropriate length.

FLUSH MOUNTING

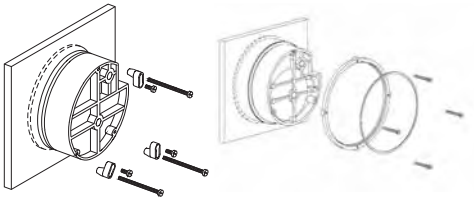

Provide a 4-9/16" dia. (116 mm) opening in panel. Provide a 4-3/4" dia. (120 mm) opening for MP and HP models. Insert gage and secure in place with No. 6-32 machine screws of appropriate length, with adapters, firmly secured in place.

PIPE MOUNTING

To mount gage on 1-1/4" - 2" pipe, order optional A-610 pipe mounting kit.

TO ZERO GAGE AFTER INSTALLATION

Set the indicating pointer exactly on the zero mark, using the external zero adjust screw on the cover at the bottom. Note that the zero check or adjustment can only be made with the high and low pressure taps both open to atmosphere.

OPERATION

Positive Pressure: Connect tubing from source of pressure to either of the two high pressure ports. Plug the port not used. Vent one or both low pressure ports to atmosphere.
Negative Pressure: Connect tubing from source of vacuum or negative pressure to either of the two low pressure ports. Plug the port not used. Vent one or both high pressure ports to atmosphere.
Differential Pressure: Connect tubing from the greater of two pressure sources to either high pressure port and the lower to either low pressure port. Plug both unused ports.
When one side of the gage is vented in dirty, dusty atmosphere, we suggest an A-331 Filter Vent Plug be installed in the open port to keep inside of gage clean.

A. For portable use of temporary installation use 1/8" pipe thread to rubber tubing adapter and connect to source of pressure with flexible rubber or vinyl tubing.
B. For permanent installation, 1/4" O.D., or larger, copper or aluminum tubing is recommended.

MAINTENANCE

No lubrication or periodic servicing is required. Keep case exterior and cover clean. Occasionally disconnect pressure lines to vent both sides of gage to atmosphere and re-zero. Optional vent valves should be used in permanent installations. The Series 2000 is not field serviceable and should be returned if repair is needed (field repair should not be attempted and may void warranty). Be sure to include a brief description of the problem plus any relevant application notes. Contact customer service to receive a return goods authorization number before shipping.

WARNING

Attempted field repair may void your warranty. Recalibration or repair by the user is not recommended.

TROUBLE SHOOTING TIPS

Gage won't indicate or is sluggish.

1. Duplicate pressure port not plugged.
2. Diaphragm ruptured due to overpressure.
3. Fittings or sensing lines blocked, pinched, or leaking.
4. Cover loose or "O"ring damaged, missing.
5. Pressure sensor, (static tips, Pitot tube, etc.) improperly located.
6. Ambient temperature too low. For operation below 20°F (-7°C), order gage with low temperature, (LT) option.

DWYER INSTRUMENTS, INC.
P.O. BOX 373 • MICHIGAN CITY, INDIANA 46361 U.S.A.
Phone: 219/879-8000 Fax: 219/872-9057
www.dwyer-inst.com e-mail: info@dwyer-inst.com

DWYER INSTRUMENTS, INC.
P.O. BOX 373 • MICHIGAN CITY, INDIANA 46361 U.S.A.
Phone: 219/879-8000 Fax: 219/872-9057
www.dwyer-inst.com e-mail: info@dwyer-inst.com

Magnehelic® Differential Pressure Gage
INSTRUCCIONES Y LISTA DE PARTES

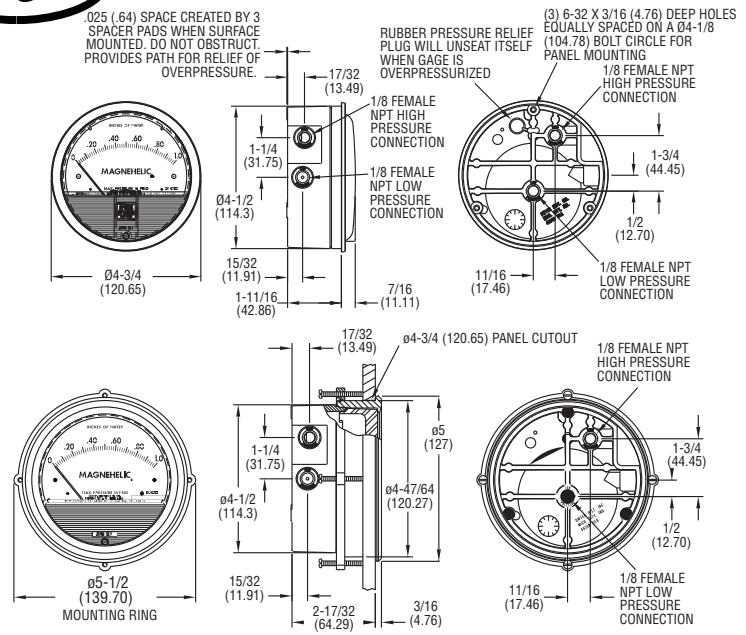

(El tapón de goma no es usado en los modelos sobre 180 pulgadas de presión de agua, modelos de presión media o alta, o en instrumentos que requieren un elastizado en cualquier otro material que no sea silicona para el diafragma.)

Accesorios: Tapones 1/8" NPT para las conexiones duplicadas, dos adaptadores de rosca 1/8" NPT a tubo de goma; y tres adaptadores para montaje al ras y tornillos.

Accesorios para Los Modelos MP y HP: El anillo de montaje y el retensor del anillo de presión son substituidos por 3 adaptadores, accesorios de compresión de 1/4" remplazan a los adaptadores de rosca 1/8" a tubo de goma.

Protección Para Sobrepresión: Los Manómetros Diferenciales Magnehelic Estándar están clasificados para una presión máxima de 15 psi y no se deberían de usar donde el límite puede excederse. Los modelos emplean un tapón de goma en el trasero que funciona como una válvula de alivio desmontándose y ventilando el interior del instrumento cuando la sobrepresión alcanza aproximadamente 25 psig. (Los modelos MP y HP son excluidos) Para proveer un camino libre para el alivio de presión, el instrumento viene con rodilleras que mantienen un espacio de .023" cuando el instrumento es montado en superficie. No bloque el espacio creado por estas rodilleras.

† Para aplicaciones con alto ciclo de velocidad dentro de la clasificación de presión total del instrumento, la próxima clasificación mas alta es recomendada. Vea las opciones de media y alta presión.

El instrumento puede ser usado con hidrogeno cuando se ordena con diafragma de Buna-N. La presion tiene que ser menos de 35 psi.

ESPECIFICACIONES

Servicio: aire y gases no combustibles, gases compatibles. (ópcion disponible para uso con gas natural).
Materiales Mojados: Consulte con la fábrica.
Carcasa: Caja y anillo de retención de aluminio fundido a presión con tapadera de acrílico. (El modelo MP tiene la tapadera de policarbonato.)
Exactitud: ±2% de fondo de escala a 21 °C
Mod. 2000-0 ±3%; Mod. 2000-00 ±4%
Límite de Presión: -20 Hg. a 15 psig. † (-0.677 bar a 1,034 bar); opción MP: 35 psig (2.41 bar), opción HP: 80 psig (5.52 bar).
Sobrepresión: El tapón de alivio se abre aproximadamente a los 25 psig, modelos estandard únicamente. El tapón de goma no es usado en los modelos sobre 180 pulgadas de presión de agua, modelos de presión media o alta, o en instrumentos que requieren un elastizado en cualquier otro material que no sea silicio para el diafragma.
Límite de Temperatura: -6.67 a 60ºC. * Modelos de baja temperatura disponibles como opción especial.
Dimensiones: diám. 120,65 mm x 55,6 prof.
Orientación de Montaje: El diafragma debe ser usado solo en posición vertical. Consulte con la fábrica para otras orientaciones de posición.
Conexiones: 1/8" NPT para alta y baja presión, duplicadas (atrás, a los lados).
Peso: 510 g, MP y HP 963 g.

Instalacíon

Seleccione un lugar libe de exceso de vibraciones, y donde la temperatura ambiente no supere los 60°C. Evite luz solar directa, para evitar decoloración de la cubierta plástica. Las conexiones de proceso pueden tener cualquier longitud sin afectar la exactitud, pero pueden extender el tiempo de respuesta del instrumento. Si hay pulsación de presión o vibración, consulte a fábrica sobre medios de amortiguación.
Los MAGNEHELIC han sido calibrados con el diafragma vertical, y deben ser usados en esas condiciones. Para otras posiciones, se debe especificar en la orden de provisión. Los de rango elevado pueden ser usados en diversas posiciones, pero se debe reajustar el cero. Los modelos de la serie 2000-00 y equivalentes métricos deben ser usados solo verticalmente.

Montaje en Superficie

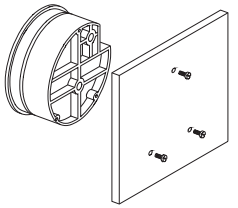

Perfore tres orificios separados 120° sobre una circunferencia de 105 mm de diám. y sostenga el instrumento con tres tornillos 6-32 de long. apropiada.

Montaje alineado

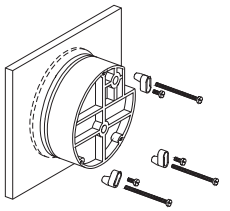

Perfore un circulo de 115 mm de diám. en el panel, y sostenga el instrumento mediante los.

Montaje Sobre Pipa

Para montar el instrumento sobre pipas de 32 a 50 mm de diám., ordene el adaptador opcional A-610.

Puesta a Cero Después de Instalar

Deje las conexiones de presión abiertas a atmósfera y ajuste a cero desde tornillo del panel frontal.

Operacion

Presión Positiva: Conecte la tubería desde la fuente de presión a cualquiera de las dos conexiones de alta presión (HIGH), bloqueando la no usada; Las conexiones de baja (LOW) presión pueden dejarse uno o los dos abiertos a la atmósfera.
Presión Negativa: Repita el procedimiento anterior, conectado en este caso las conexiones de baja presión (LOW). Deje las otras conexiones abiertas.
Presión diferencial: Conecte el tubo correspondiente a la presión más positiva al cualquiera de los conectores de alta presión (HIGH) bloqueando el no usado, y la más baja presión o presión negativa (vacío) al conector de baja presión (LOW). Puede usarse cualquier conector de cada par, dejando siempre uno bloqueado. Si se deja una conexión abierta a la atmósfera, se recomienda el uso de un filtro tipo A-331 en el lugar correspondiente para mantener limpio el interior del instrumento. Para uso portable, o instalación temporaria, uso adapta dores para rosca de tubo de 1/89 a tubo flexible, y conecte a proceso mediante una tubería de goma, o equivalente. Para instalación permanente, se recomienda el uso de tubo de cobre o aluminio de por lo menos 1/4" de diám. exterior.

No se requiere mantenimiento específico alguno, ni lubricación. Periódicamente, desconecte el instrumento, ventee la presión acumulada, y reajuste el cero. Para instalaciones permanentes, se debe usar un juego de válvulas de montaje permanente para el venteo.
El instrumento de Serie 2000 no puede ser re parado en el campo y debería de ser regresado si reparos son necesarios (Reparos en el campo no deben de ser intentados y pueden cancelar la garantía.). Asegurarse de incluir una descripción breve del problema más cualquier notas pertinentes a la aplicación para devolución de productos antes de enviar el instrumento.

Cuidado! : La recalibración en campo puede invalidar la garantía. No se recomienda la recalibracion por parte del usuario. En caso necesario envie el instrumento con transporte pago a:

Localización De Fallas

• *El instrumento no indica, o es lento en reacción.*
1. Conexión duplicada abierta.
2. Diafragma roto por sobrepresión.
3. Tubería de conexión perforada, con pérdidas o pinchazos.
4. Anillo de retención flojo, u "O " ring dañado.
5. Conexión a proceso indebida o inadecuada.
6. Temperatura muy baja. Para este caso ordene tipos LT (baja temperatura).

©Copyright 2010 Dwyer Instruments, Inc.
Printed in U.S.A. 1/10 FR# 12-440212-10 Rev.2

DWYER INSTRUMENTS, INC.
P.O. BOX 373 • MICHIGAN CITY, INDIANA 46361 U.S.A.
Phone: 219/879-8000 Fax: 219/872-9057
www.dwyer-inst.com e-mail: info@dwyer-inst.com

DWYER INSTRUMENTS, INC.
P.O. BOX 373 • MICHIGAN CITY, INDIANA 46361 U.S.A.
Phone: 219/879-8000 Fax: 219/872-9057
www.dwyer-inst.com e-mail: info@dwyer-inst.com

Series MS Magnesense® Differential Pressure Transmitter

Specifications - Installation and Operating Instructions

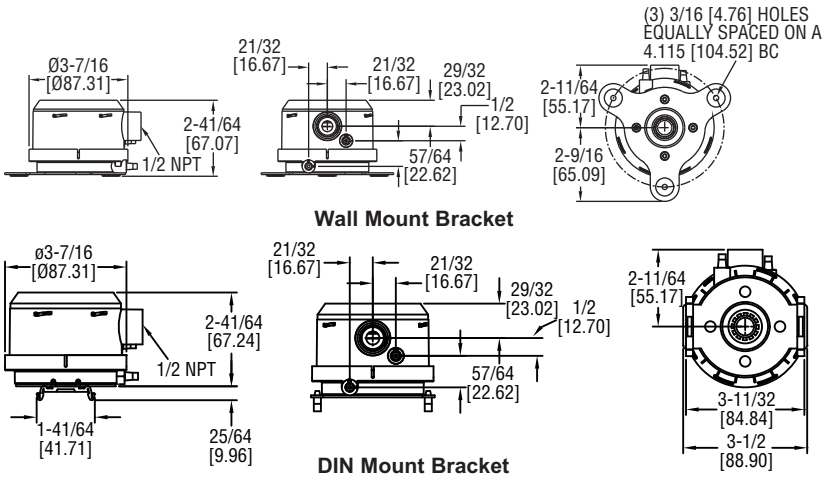

The Series MS Magnesense® Differential Pressure Transmitter is an extremely versatile transmitter for monitoring pressure and air velocity. This compact package is loaded with features such as: field selectable English or metric ranges, field upgradeable LCD display and the ability to select a square root output for use with pitot tubes and other similar flow sensors. Also, a single digital push button simultaneously calibrates both zero and span reducing installation and setup time. These features along with exceptional long term performance enables the Magnesense® to be the solution for a myriad of pressure and air flow applications.

INSTALLATION

Mounting:

The transmitter should be mounted on a vertical surface with the connections directed down to prevent moisture from entering either the pressure ports or the electrical cable entry.

Mount the transmitter using #8 x 1/2″ pan head sheet metal screws in the mounting flanges. Do not over tighten.

Electrical Connection:

2-Wire Operation:

⚠ CAUTION DO NOT EXCEED SPECIFIED SUPPLY VOLTAGE RATINGS. PERMANENT DAMAGE NOT COVERED BY WARRANTY WILL RESULT. 2-WIRE UNITS ARE NOT DESIGNED FOR AC VOLTAGE OPERATION.

SPECIFICATIONS

Service: Air and non-combustible, compatible gases.
Wetted Materials: Consult factory.
Accuracy: ±1% @ standard conditions.
Stability: ±1% F.S./ year.
Temperature Limits: 0 to 150°F (-18 to 66°C).
Pressure Limits:
1 psi (6.89 kPa) maximum, operation;
10 psi (68.9 kPa), burst.
Power Requirements:
2-wire, 10 to 35 VDC;
3-wire, 17 to 36 VDC or isolated 21.6 to 33 VAC.
Output Signals:
2-wire, 4 to 20 mA;
3-wire, 0 to 10 V or 0 to 5 V.
Response Time: 300 msec.
Pressure Calibration: One digital push button set both zero & span simultaneously.
Loop Resistance:
Current output: 0 to 1250 ohm max.;
Voltage output: min. load resistance 1 k ohmΩ.
Current Consumption: 40 mA max.
Display (optional): 4 digit LCD.
Electrical Connections:
4 to 20 mA units: 2-wire: European style terminal block for 16 to 26 AWG;
0 to 10 V units: 3-wire: European style terminal block 16 to 22 AWG.
Electrical Entry: 1/2″ NPS thread.
Accessory: A-151 cable gland for 5 to 10 mm diameter cable.
Process Connections: 3/16″ (5 mm) ID tubing. Maximum OD 9 mm.
Enclosure Rating: NEMA 4X (IP65).
Mounting Orientation: Insensitive to mounting orientation.
Weight: 8.0 oz (230 g).
Agency Approval: CE.
The following standards were used for CE approval:
CENELEC EN 61000-4-2: 2001
CENELEC EN 61000-4-3: 2002
CENELEC EN 61000-4-4: 1995
CENELEC EN 61000-4-5: 2001
CENELEC EN 61000-4-6: 2003
CENELEC EN 61000-4-8: 2001
CENELEC EN 55011: 2003
CENELEC EN 61326: 2002
89/336/EED EMC Directive

DWYER INSTRUMENTS, INC.
P.O. Box 373 • Michigan City, IN 46361-0373, U.S.A.
Phone: 219/879-8000 **www.dwyer-inst.com**
Fax: 219/872-9057 **e-mail: info@dwyer-inst.com**

Electrical Connection:
2-Wire Operation, continued:

The connections to the transmitter are made through a two circuit European style terminal block CONN6 located at the bottom of the main PCB board. Polarity is indicated by + and – signs on the PCB board. Do not connect to the (V) terminal.

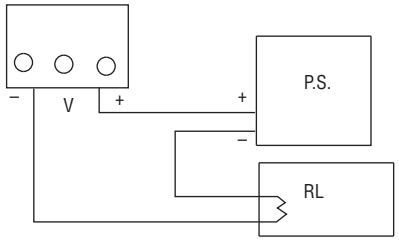

Figure 1

An external power supply delivering 10 to 35 VDC with a minimum current capability of 40 milliamps must be used to power the control loop in which the Magnesense® transmitter is connected. Refer to Fig. 1 for connection of the power supply, transmitter and receiver. The range of appropriate receiver load resistances (R_L) for the power supply voltage available is given by the formula and graph in Fig. 2. Shielded two wire cable is recommended for control loop wiring and the negative side of the loop may be grounded if desired. Note also that the receiver may be connected in either the negative or positive side of the loop, whichever is most convenient. Should polarity of the transmitter or receiver be inadvertently reversed, the loop will not function properly but no damage will be done to the transmitter.

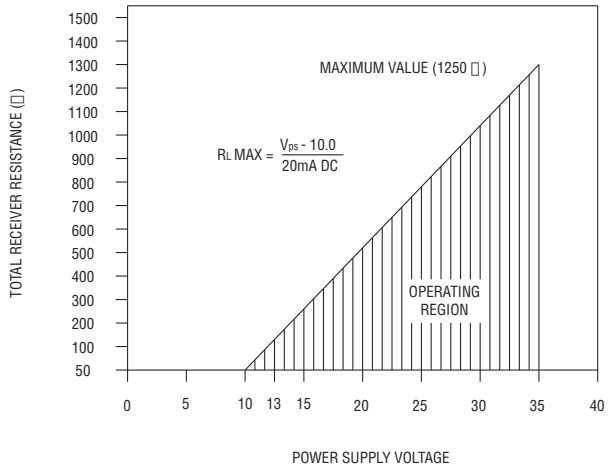

Figure 2

The maximum length of connecting wire between the transmitter and the receiver is a function of wire size and receiver resistance. That portion of the total current loop resistance represented by the resistance of the connecting wires themselves should not exceed 10% of the receiver resistance. For extremely long runs (over 1,000 feet), it is desirable to select receivers with higher resistances in order to keep the size and cost of the connecting leads as low as possible. In installations where the connecting run is no more than 100 feet, connecting lead wire as small as No. 22 Ga. can be used.

3-Wire Operation:

⚠ CAUTION DO NOT EXCEED SPECIFIED SUPPLY VOLTAGE RATINGS. PERMANENT DAMAGE NOT COVERED BY WARRANTY WILL RESULT.

The connections to the transmitter are made through a three circuit European style terminal block. Connect the power and signal leads to the corresponding terminals as shown in Fig. 3. When using a DC supply, the positive of the supply should be connected to (+) and the negative connected to (-). Connecting the leads in reverse will not damage the device but it will not operate. The DC supply should be capable of providing 20 mA or more of current per Magnesense® transmitter.

When using an isolated AC supply, either leads of the supply may be connected to (-) and (+). The input diode of the device half wave rectifies and filters the applied AC voltage. A small DC current of less than 20 mA is thus drawn through the transformer. The transformer used for the AC supply must be capable of handling this small DC current. Use a UL 1584 Class 2 rated transformer rated between 24 V and 30 VAC, 40 VA or larger, 50/60 Hz. UL 1584 Class 2 rated transformers are limited to 30 VAC maximum under any conditions at nominal line. The AC input voltage to the device is thus limited to a minimum of 21.6 at low line (24 V-10%) and 33 V at high line (30 V+10%).

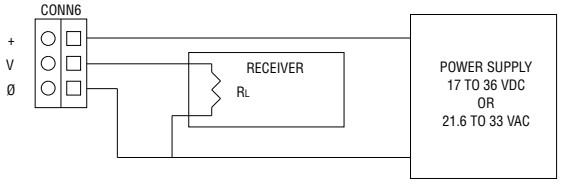

Figure 3

The output of (V) is 0 to 5 VDC or 10 VDC depending on model. As much as 10 mA may be drawn from (V) without affecting accuracy. This limits the minimum load RL connected to Vo to 1 KΩ or higher. Remember to keep the wiring resistance between the output and the receiver R_L low compared to value of R_L. While the voltage at the terminals remains unchanged with a 10 mA current flow, resistive losses in the wiring do cause errors in the voltage delivered to R_L. For a 1% accurate gauge, a good rule of thumb would be to keep the resist 0.1% of the value of R_L. This will keep the error caused by current flow below 0.1%.

To minimize noise in the signal use shielded cable. The common line may also be grounded.

Pressure Connections
Two integral tubing connectors are provided. They are designed to fit 3/16″ (5 mm) ID tubing. Connect the high pressure to the High side as shown in Fig. 4. Be sure the pressure ratings of the tubing exceed that of the operating ranges.

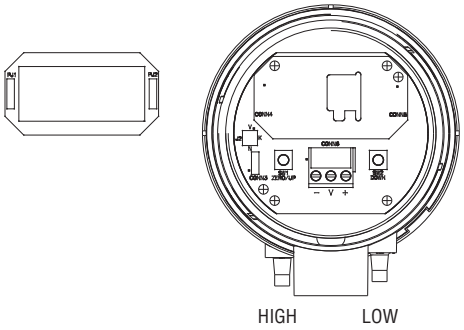

Figure 4

Select Operation Mode:
The operating modes and ranges are controlled by a shorting jumper on jumper block J2. This jumper block is shown in Fig. 5.

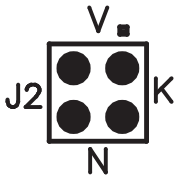

Figure 5: Mode Programming Jumpers

Jumper block J2 primary function is to control the operating mode. There are two operating modes, Normal and Velocity. The Normal operating mode provides for zero pressure to correspond to 0 V or 4 mA output. This mode is selected by placing the supplied shorting jumper for J2 on the pins next to the letter "N". The jumper for J2 is factory installed to the Normal mode. If no jumper is installed on J2, the device defaults to the "N" selection.

The Velocity mode provides the ability for the unit in conjunction with a pitot tube or similar flow sensor with known K factor to give a direct output in air velocity. This mode is selected by placing the supplied shorting jumper for J2 on the pins next to the letter "V". If the optional display is present, this mode prompts the display to read in air velocity. The current or voltage output is modified such that full scale output is 4004* K* $\sqrt{(\Delta P)}$ feet per minute or its metric equivalent in meters per second depending upon which units are selected. The factory programming for the K factor is 1.00 but may be adjusted (see Adjust K Factor). The velocity displayed for the various models can be found in Table 1a, 1b, and 1c.

Standard Velocity Displayed		
Model	**English**	**Metric**
MS-X3X	K* 12.66 x 1000 fpm	K* 57.7 m/s
MS-X4X	K* 15.51 x 1000 fpm	K* 70.7 m/s
MX-X5X	K* 20.02 x 1000 fpm	K* 91.2 m/s

Table 1a

SETUP
Set Measurement Units:
Standard Magnesense® transmitters can be easily set to operate in either English or metric units.

The programming jumper is CONN3. A representation of this jumper is shown in Fig. 6. English units are selected by placing the provided shorting jumper on the lower two pins of the block. Metric units are selected by placing the provided shorting jumper on the upper two pins of the block. If no jumper is present English units are selected by default.

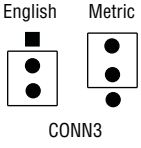

Figure 6a: Measurement Units Programming Jumper

In addition to the obvious change in the scale of the LCD display, the full scale range and corresponding analog outputs are also affected by the measurement units selection. The analog output goes to full scale output (5 volts, 10 volts or 20 mA depending on model) of the selected range and units. See Table 2.

FULL SCALE ANALOG OUTPUT

Model	English	Metric
MS-X31	10 in w.c.	2 kPa
MS-X41	15 in w.c.	3 kPa
MX-X51	25 in w.c.	5 kPa

Table 2

Install Optional Display:
The A-435 LCD conversion kit allows any non display model to have the LCD added at a later time. The kit contains an LCD display and replacement cover with LCD window. The optional display may be set to read pressure either in Inches Water Column or Kilopascal. The optional display can be also set to display air velocity in X1000 feet per minute or meters per second when used with a pitot tube or similar flow sensor with a known K factor.

The optional display for the Magnesense® is mounted on the main board by connectors CONN4 and CONN5. The display is properly mounted when CONN4 and CONN5 on the display are connected to the corresponding CONN4 and CONN5 on the main board. See Fig. 4. Installing the display upside down causes no harm the display or the main board. The display just simply reads upside down.

Label (Included with display):
The optional LCD display does not contain engineering unit indication. So that the display may be appropriately marked, four adhesive labels have been provided with the units. The unit labels are INWC, kPa, X1000 fpm, and M/S. Attach the appropriate provided units label above the display window on the cover of the device to indicate to which units the display has been set.

Adjust K Factor:
If the optional display is present, the K factor used in velocity measurements may be adjusted. This is done by activating the K factor adjustment function of the unit. To activate the K factor adjustment function, take the shorting jumper from programming block J2 and place it on the upper two terminals next to the letter "K". See Fig. 5. The display will now show the programmed pitot tube K factor. The K factor can be adjusted up and down by using the up and down buttons as up and down buttons. Once the desired K factor has been set, replace the shorting jumper on J2 to its velocity position ("V"). The shorting jumper must not be left in the "K" position for proper operation of the unit. The factory setting for the K factor is 1.0 and it is adjustable from 0.1 to 4.0.

One button pressure calibration – Leaving the hose barbs vented, press and hold the "Zero/Up" switch for about 4 to 5 seconds. The zero point should now be set and if the display is present, the display will read zero. Span is also simultaneously adjusted at the time the zero is set. No further calibration is required. It does not matter if in metric or English unit made when performing this "one button" calibration of both zero & span.

DJE/DJM MODELS
Magnesense® transmitters having the -DJE or -DJM option are configurable to show velocity in two different formats. CONN3 selects the number of decimal places displayed in velocity mode as shown in Figure 6b.

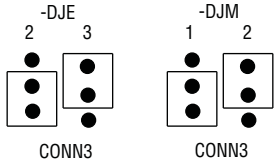

Figure 6b: Velocity Decimal Place Jumper

MAINTENANCE

Annual recalibration is suggested. No lubrication or other periodic servicing is required. Keep exterior and cover clean. Occasionally disconnect pressure lines to vent both sides of gauge to atmosphere and re-zero. Do not use solvent to clean transmitter. Use only plastic compatible cleaners or water.

The Series MS is not field serviceable and should be returned if repair is needed (field repair should not be attempted and may void warranty). Be sure to include a brief description of the problem plus any relevant application notes. Contact customer service to receive a return goods authorization number before shipping.

©Copyright 2011 Dwyer Instruments, Inc.

Printed in U.S.A. 2/11

FR-# 01-443337-20 Rev.4

DWYER INSTRUMENTS, INC.
P.O. Box 373 • Michigan City, IN 46361-0373, U.S.A.

Phone: 219/879-8000 **www.dwyer-inst.com**
Fax: 219/872-9057 **e-mail: info@dwyer-inst.com**

HEAT EXCHANGER

XCHANGER INC.

Model # AA-1000

INDUSTRIAL HEAT EXCHANGERS
XCHANGER

1401 7th STREET S.
HOPKINS, MN 55343
952-933-2559
XCHANGER.COM

AA Series Heat Exchanger

AA Series exchangers cool low pressure air streams using fan-drafted ambient air. Air flows to 3,500 CFM from vacuum to 75 PSI can be cooled near ambient, with under 0.2 PSI pressure loss. AA Series exchangers are ideal for installation outdoors where cooling water is unavailable or undesirable due to freezing temperatures. Indoor installations should be well ventilated. The process air should be filtered and pulsating flow, such as that produced by rotary lobe blowers, should be dampened by a chambered silencer prior to entering the heat exchanger.

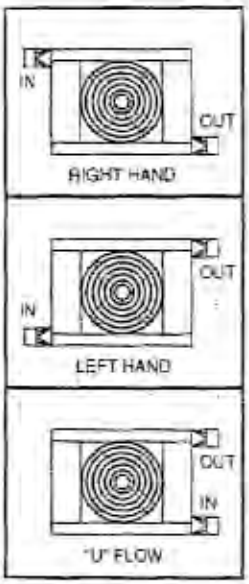

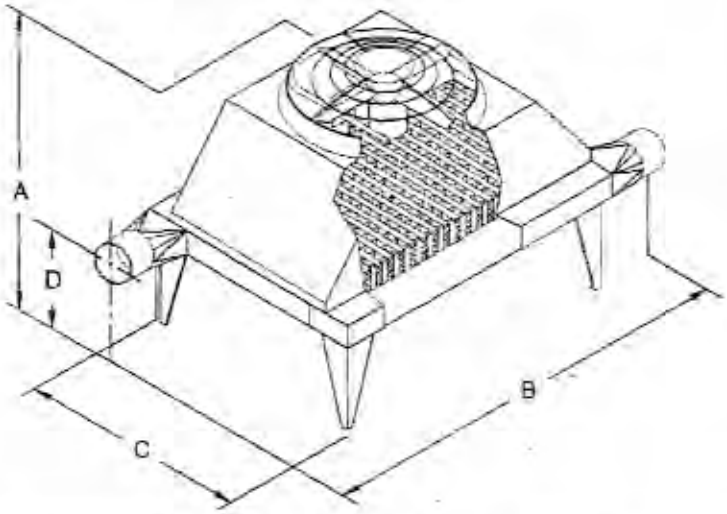

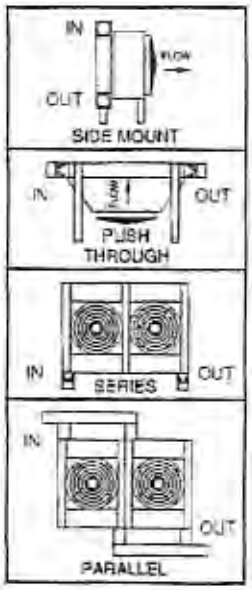

SEE LINE #54 OF DATA SHEET FOR APPROXIMATE DIMENSIONS

Std. Lead Time: 6 Weeks

Expedited Shipping Schedule (If Available)	
Working Days After Drawing Approval	AA Series & Cores
5	20%
10	10%
15	5%
20	2.5%
30	—

Add 10 days to schedule for epoxy phenolic coating.

Design Options:

Connection types: tube, pipe, flange, NPT, ferrule, etc
Materials of construction:
Core: aluminum (others available with our LC series)
Propeller, venturi and shroud: aluminum, painted, galvanized, or stainless steel
Motors: any available
Epoxy phenolic coating for corrosion protection of the core
Units can be built to required dimensions
Multiple cores combined together to make a single unit

Accessories: (Prices Subject To Change)

Instrument Coupling:	$ 60
Thermometer (Coupling Included):	$ 90
Differential Pressure Gauge:	$ 280
Service side filters	Ask
Others available upon request	

CERTIFIED
DRAWING
Date: 05/10/05

34323

PERFORMANCE AND CONSTRUCTION PER DATA SHEET #63099
QUANTITY OF - 1 - REQUIRED

TOP VIEW

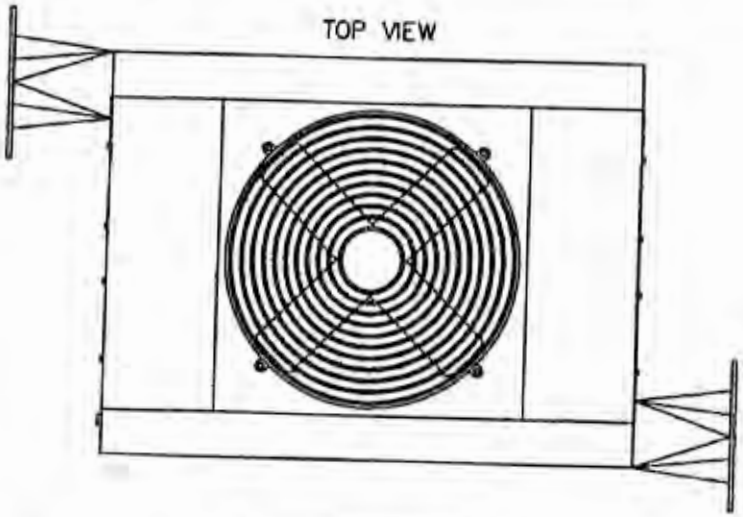

Xchanger Inc.
Hopkins, Minnesota

CUSTOMER P.O.:	M1321
Solleco L.L.C.	
MODEL NUMBER:	AA-1000 P/N: 34323
SERIAL NUMBER:	0505-B9350

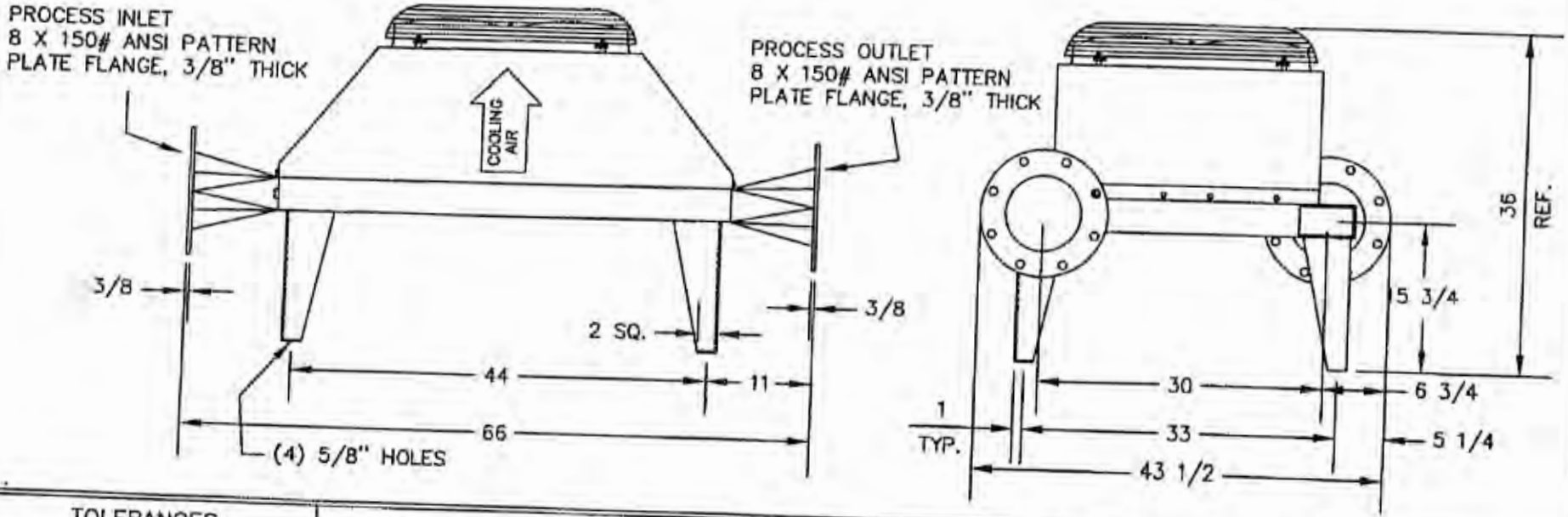

TOLERANCES (UNLESS OTHERWISE NOTED)		Xchanger Inc. 1401 SOUTH 7TH ST HOPKINS, MN 55343		MODEL AA-1000 HEAT EXCHANGER ASSEMBLY			
DECIMAL ± .25	FRACTIONAL ± 1/4	DRAWN BY: MJR APPROVED BY:	SCALE: NONE DATE: 05/10/05	JOB NUMBER B9350	SHEET 1 OF 1	DRAWING NUMBER 34323	REV. .

HEAT EXCHANGER MOTOR VARIABLE FREQUENCY DRIVE (VFD)

AUTOMATION DIRECT

GS2 SERIES AC DRIVE

GS2 Series Drives

User Manual

GS2

AC DRIVE

115V Input: 0.25 - 1.0 hp

230V Input: 0.5 - 7.5 hp

460V Input: 1.0 - 10 hp

575V Input: 1.0 - 10 hp

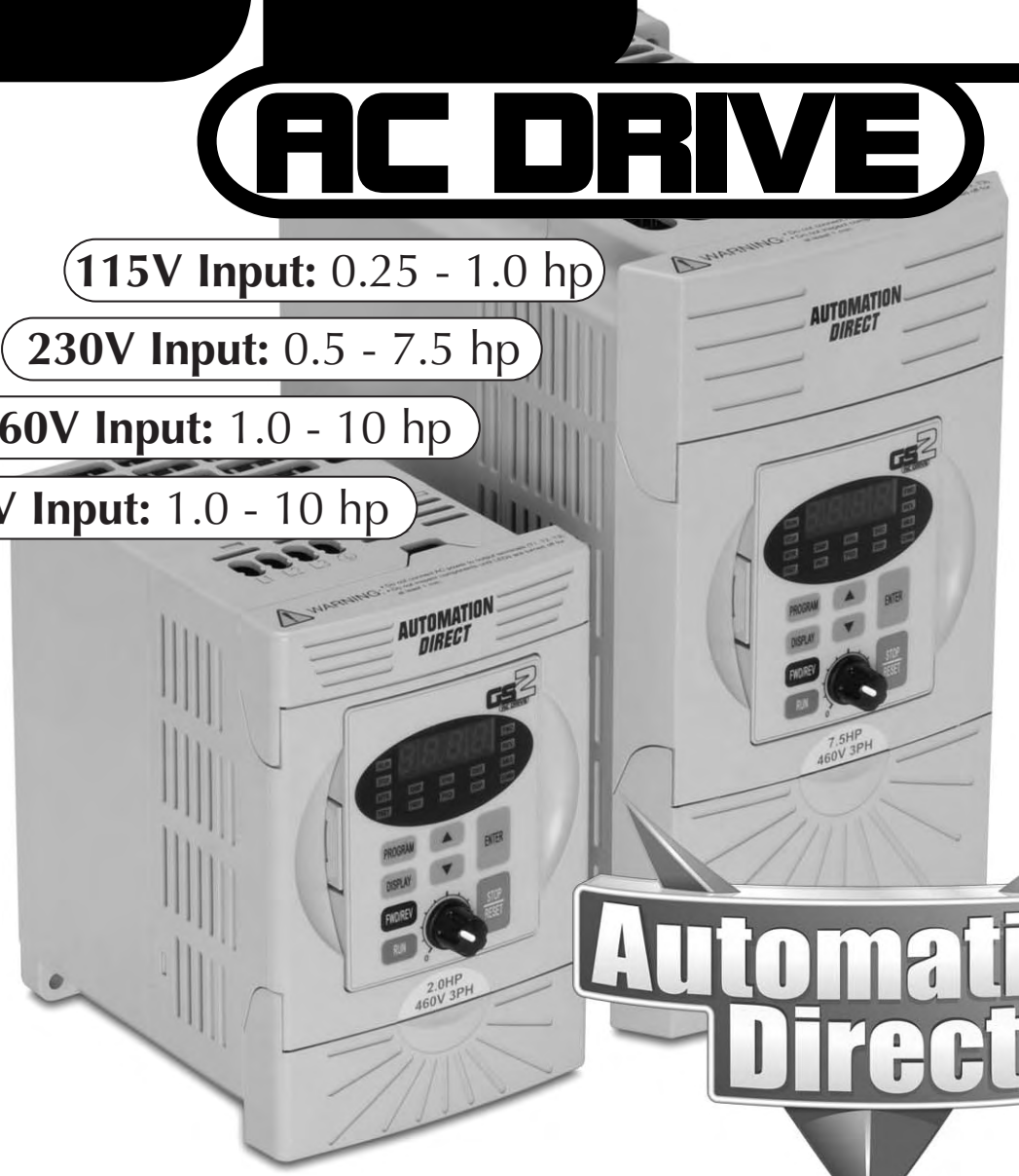

Automation Direct®

WARNING

Thank you for purchasing automation equipment from Automationdirect.com®, doing business as AutomationDirect. We want your new automation equipment to operate safely. Anyone who installs or uses this equipment should read this publication (and any other relevant publications) before installing or operating the equipment.

To minimize the risk of potential safety problems, you should follow all applicable local and national codes that regulate the installation and operation of your equipment. These codes vary from area to area and usually change with time. It is your responsibility to determine which codes should be followed, and to verify that the equipment, installation, and operation is in compliance with the latest revision of these codes.

At a minimum, you should follow all applicable sections of the National Fire Code, National Electrical Code, and the codes of the National Electrical Manufacturer's Association (NEMA). There may be local regulatory or government offices that can also help determine which codes and standards are necessary for safe installation and operation.

Equipment damage or serious injury to personnel can result from the failure to follow all applicable codes and standards. We do not guarantee the products described in this publication are suitable for your particular application, nor do we assume any responsibility for your product design, installation, or operation.

Our products are not fault-tolerant and are not designed, manufactured or intended for use or resale as on-line control equipment in hazardous environments requiring fail-safe performance, such as in the operation of nuclear facilities, aircraft navigation or communication systems, air traffic control, direct life support machines, or weapons systems, in which the failure of the product could lead directly to death, personal injury, or severe physical or environmental damage ("High Risk Activities"). AutomationDirect specifically disclaims any expressed or implied warranty of fitness for High Risk Activities.

For additional warranty and safety information, see the Terms and Conditions section of our catalog. If you have any questions concerning the installation or operation of this equipment, or if you need additional information, please call us at 770-844-4200.

This publication is based on information that was available at the time it was printed. At AutomationDirect we constantly strive to improve our products and services, so we reserve the right to make changes to the products and/or publications at any time without notice and without any obligation. This publication may also discuss features that may not be available in certain revisions of the product.

Trademarks

This publication may contain references to products produced and/or offered by other companies. The product and company names may be trademarked and are the sole property of their respective owners. AutomationDirect disclaims any proprietary interest in the marks and names of others.

Copyright 2004, Automationdirect.com® Incorporated
All Rights Reserved

No part of this manual shall be copied, reproduced, or transmitted in any way without the prior, written consent of Automationdirect.com® Incorporated. AutomationDirect retains the exclusive rights to all information included in this document.

AVERTISSEMENT

Nous vous remercions d'avoir acheté l'équipement d'automatisation de Automationdirect.com®, en faisant des affaires comme AutomationDirect. Nous tenons à ce que votre nouvel équipement d'automatisation fonctionne en toute sécurité. Toute personne qui installe ou utilise cet équipement doit lire la présente publication (et toutes les autres publications pertinentes) avant de l'installer ou de l'utiliser.

Afin de réduire au minimum le risque d'éventuels problèmes de sécurité, vous devez respecter tous les codes locaux et nationaux applicables régissant l'installation et le fonctionnement de votre équipement. Ces codes diffèrent d'une région à l'autre et, habituellement, évoluent au fil du temps. Il vous incombe de déterminer les codes à respecter et de vous assurer que l'équipement, l'installation et le fonctionnement sont conformes aux exigences de la version la plus récente de ces codes.

Vous devez, à tout le moins, respecter toutes les sections applicables du Code national de prévention des incendies, du Code national de l'électricité et des codes de la National Electrical Manufacturer's Association (NEMA). Des organismes de réglementation ou des services gouvernementaux locaux peuvent également vous aider à déterminer les codes ainsi que les normes à respecter pour assurer une installation et un fonctionnement sûrs.

L'omission de respecter la totalité des codes et des normes applicables peut entraîner des dommages à l'équipement ou causer de graves blessures au personnel. Nous ne garantissons pas que les produits décrits dans cette publication conviennent à votre application particulière et nous n'assumons aucune responsabilité à l'égard de la conception, de l'installation ou du fonctionnement de votre produit.

Nos produits ne sont pas insensibles aux défaillances et ne sont ni conçus ni fabriqués pour l'utilisation ou la revente en tant qu'équipement de commande en ligne dans des environnements dangereux nécessitant une sécurité absolue, par exemple, l'exploitation d'installations nucléaires, les systèmes de navigation aérienne ou de communication, le contrôle de la circulation aérienne, les équipements de survie ou les systèmes d'armes, pour lesquels la défaillance du produit peut provoquer la mort, des blessures corporelles ou de graves dommages matériels ou environnementaux («activités à risque élevé»). La société AutomationDirect nie toute garantie expresse ou implicite d'aptitude à l'emploi en ce qui a trait aux activités à risque élevé.

Pour des renseignements additionnels touchant la garantie et la sécurité, veuillez consulter la section Modalités et conditions de notre documentation. Si vous avez des questions au sujet de l'installation ou du fonctionnement de cet équipement, ou encore si vous avez besoin de renseignements supplémentaires, n'hésitez pas à nous téléphoner au 770-844-4200.

Cette publication s'appuie sur l'information qui était disponible au moment de l'impression. À la société AutomationDirect, nous nous efforçons constamment d'améliorer nos produits et services. C'est pourquoi nous nous réservons le droit d'apporter des modifications aux produits ou aux publications en tout temps, sans préavis ni quelque obligation que ce soit. La présente publication peut aussi porter sur des caractéristiques susceptibles de ne pas être offertes dans certaines versions révisées du produit.

Marques de commerce

La présente publication peut contenir des références à des produits fabriqués ou offerts par d'autres entreprises. Les désignations des produits et des entreprises peuvent être des marques de commerce et appartiennent exclusivement à leurs propriétaires respectifs. AutomationDirect nie tout intérêt dans les autres marques et désignations.

Copyright 2004, Automationdirect.com® Incorporated
Tous droits réservés

Nulle partie de ce manuel ne doit être copiée, reproduite ou transmise de quelque façon que ce soit sans le consentement préalable écrit de la société Automationdirect.com® Incorporated. AutomationDirect conserve les droits exclusifs à l'égard de tous les renseignements contenus dans le présent document.

WARNING

Warning: Read this manual thoroughly before using GS2 Series AC Motor Drives.

WARNING: AC input power must be disconnected before performing any maintenance. Do not connect or disconnect wires or connectors while power is applied to the circuit. Maintenance must be performed only by a qualified technician.

WARNING: There are highly sensitive MOS components on the printed circuit boards, and these components are especially sensitive to static electricity. To avoid damage to these components, do not touch these components or the circuit boards with metal objects or your bare hands.

WARNING: A charge may still remain in the DC-link capacitor with hazardous voltages, even if the power has been turned off. To avoid personal injury, do not remove the cover of the AC drive until all "DISPLAY LED" lights on the digital keypad are off. Please note that there are live components exposed within the AC drive. Do not touch these live parts.

WARNING: Ground the GS2 AC Drive using the ground terminal. The grounding method must comply with the laws of the country where the AC drive is to be installed. Refer to "Basic Wiring Diagram" in CHAPTER 2.

WARNING: The mounting enclosure of the AC drive must comply with EN50178. Live parts shall be arranged in enclosures or located behind barriers that meet at least the requirements of the Protective Type IP20. The top surface of the enclosures or barrier that is easily accessible shall meet at least the requirements of the Protective Type IP40. Users must provide this environment for GS2 Series AC Drive.

Warning: The AC drive may be destroyed beyond repair if incorrect cables are connected to the input/output terminals. Never connect the AC drive output terminals T1, T2, and T3 directly to the AC main circuit power supply.

GS2 Series AC Drive
USER MANUAL

Please include the Manual Number and the Manual Issue, both shown below, when communicating with Technical Support regarding this publication.

Manual Number: GS2-M

Issue: First Edition, Revision C

Issue Date: 12/2006

Publication History		
Issue	**Date**	**Description of Changes**
First Edition	6/07/02	Original
First Edition, Revision A	6/30/03	Made minor changes throughout. Update for Firmware Version 1.04 Added parameter 7.00 (PID) functionality.
First Edition, Revision B	1/28/05	Added 115V drives; Made minor changes throughout.
First Edition, Revision C	12/2006	Added 575V drives and accessories; Added Ch1 Drives Purpose section; Added short circuit withstand specifications and notes; Changed Ch5 DL PLC control program example; Added new AppxB PLC analog modules; Miscellaneous clarification revisions throughout.

TABLE OF CONTENTS

Getting Started 1–1
- Manual Overview 1–2
- GS2 AC Drive Introduction 1–3
- GS2 AC Drive Specifications 1–5

Installation and Wiring 2–1
- Ambient Conditions 2–2
- Installation 2–3
- Dimensions 2–4
- GS2 Circuit Connections 2–6
- External Accessories 2–12

Keypad Operation and Quickstart 3–1
- The GS2 Digital Keypad 3–2
- GS2 Quickstart 3–6

AC Drive Parameters 4–1
- GS2 Parameter Summary 4–2
- Detailed Parameter Listings 4–11
- Motor Parameters 4–11
- Ramp Parameters 4–13
- Volts/Hertz Parameters 4–19
- Digital Parameters 4–22
- Analog Parameters 4–32
- Preset Parameters 4–41
- Protection Parameters 4–43
- PID Parameters 4–51
- Display Parameters 4–55
- Communication Parameters 4–56

GS2 Modbus Communications 5–1
Communication Parameters Summary 5–2
GS2 Parameter Memory Addresses 5–4
GS2 Status Addresses 5–9
Communicating with *Direct*Logic PLCs 5–12
Communicating with Third-party Devices 5–30
Maintenance and Troubleshooting 6–1
Maintenance and Inspection 6–2
Troubleshooting 6–3
Accessories A–1
Accessories Part Numbering A–2
Line Reactors A–2
Braking Resistors A–8
EMI Input Filters A–10
RF Filters A–16
Fuses and Fuse Kits A–17
GS-EDRV Ethernet Interface A–20
GS Drive Configuration Software A–22
Miscellaneous Accessories A–25
Using GS2 AC Drives with DirectLOGIC PLCs B–1
Compatible *Direct*LOGIC PLCs and Modules B–2
Typical Connections to the GS2 Series AC Drive B–7
Index I–1

CHAPTER 1

GETTING STARTED

In This Chapter...

Manual Overview 1–2
- Overview of this Publication 1–2
- Who Should Read This Manual 1–2
- Supplemental Publications 1–2
- Technical Support 1–2
- Special Symbols 1–2

GS2 AC Drive Introduction 1–3
- Purpose of AC Drives 1–3
- Unpacking 1–3
- Model Explanation: 1–3
- Nameplate Information: 1–3
- External Parts and Labels: 1–4

GS2 AC Drive Specifications 1–5

Manual Overview

Overview of this Publication

The GS2 AC Drive User Manual describes the installation, configuration, and methods of operation of the GS2 Series AC Drive.

Who Should Read This Manual

This manual contains important information for those who will install, maintain, and/or operate any of the GS2 Series AC Drives.

Supplemental Publications

The National Electrical Manufacturers Association (NEMA) publishes many different documents that discuss standards for industrial control equipment. Global Engineering Documents handles the sale of NEMA documents. For more information, you can contact Global Engineering Documents at:

15 Inverness Way East
Englewood, CO 80112-5776
1-800-854-7179 (within the U.S.)
303-397-7956 (international)
www.global.ihs.com

NEMA documents that might assist with your AC drive systems are:

- **Application Guide for AC Adjustable Speed Drive Systems**
- **Safety Standards for Construction and Guide for Selection, Installation, and Operation of Adjustable Speed Drive Systems.**

Technical Support

By Telephone: 770-844-4200
(Mon.-Fri., 9:00 a.m.-6:00 p.m. E.T.)
On the Web: www.automationdirect.com

Our technical support group is glad to work with you in answering your questions. If you cannot find the solution to your particular application, or, if for any reason you need additional technical assistance, please call technical support at **770-844-4200**. We are available weekdays from 9:00 a.m. to 6:00 p.m. Eastern Time.

We also encourage you to visit our web site where you can find technical and non-technical information about our products and our company. Visit us at **www.automationdirect.com**.

Special Symbols

When you see the "notepad" icon in the left-hand margin, the paragraph to its immediate right will be a special note.

When you see the "exclamation mark" icon in the left-hand margin, the paragraph to its immediate right will be a WARNING. This information could prevent injury, loss of property, or even death (in extreme cases).

GS2 AC Drive Introduction

Purpose of AC Drives

AC drives are generally known by many different names: Adjustable Frequency Drives (AFD), Variable Frequency Drives (VFD), and Inverters. Drives are used primarily to vary the speed of three phase AC induction motors, and they also provide non-emergency start and stop control, acceleration and deceleration, and overload protection. By gradually accelerating the motor, drives can reduce the amount of motor startup inrush current.

AC drives function by converting incoming AC power to DC, which is then synthesized back into three phase output power. The voltage and frequency of this synthesized output power is directly varied by the drive, where the frequency determines the speed of the three phase AC induction motor.

Drive Package Contents

After receiving the AC motor drive, please check for the following:

- Make sure that the package includes an AC drive, the GS2 Series AC Drive User Manual, and the GS2 Series AC Drive Quick Reference.
- Inspect the unit to insure it was not damaged during shipment.
- Make sure that the part number indicated on the nameplate corresponds with the part number of your order.

Model Explanation:

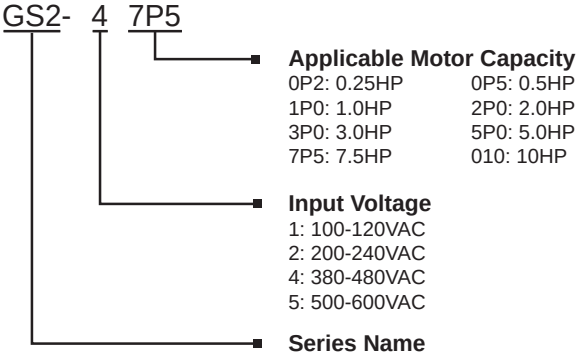

Nameplate Information:

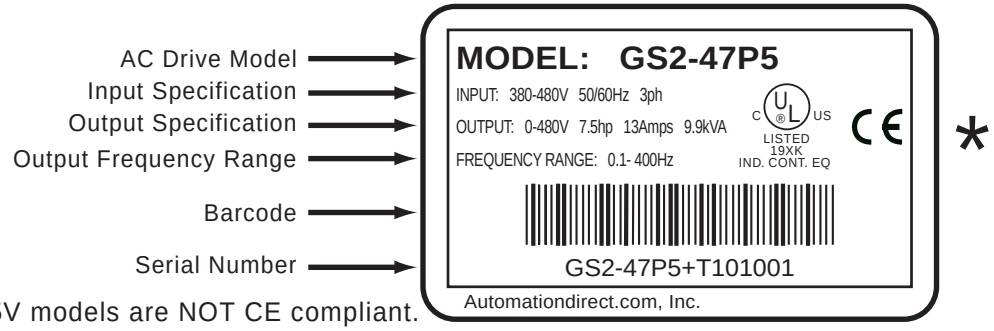

External Parts and Labels:

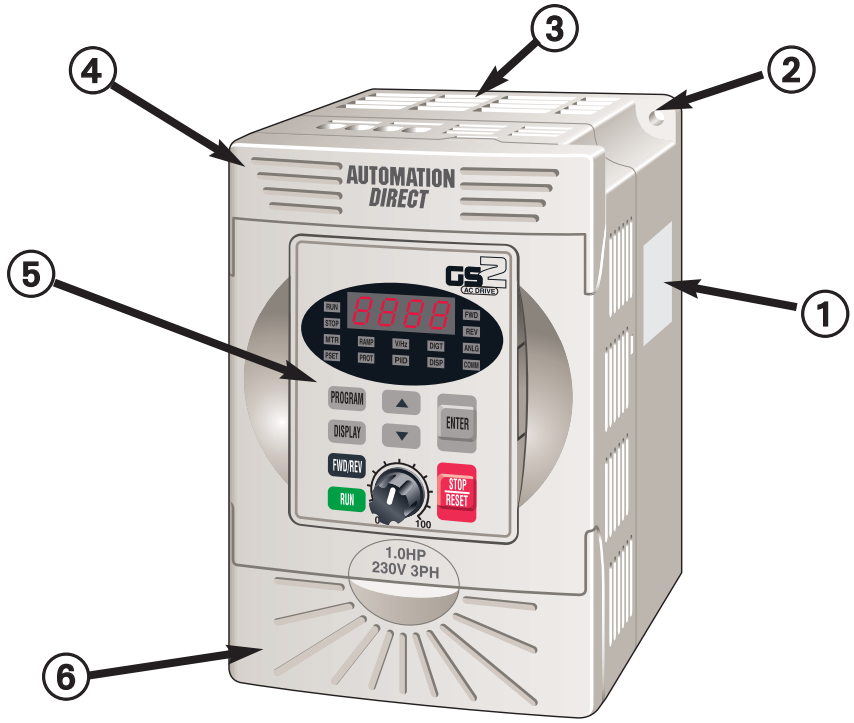

① Nameplate Label
② Mounting Screw Holes
③ Ventilation Slots
④ Upper Cover
⑤ Digital Keypad
⑥ Lower Cover
⑦ DIP Switches
⑧ Input Power Terminals
⑨ Control Input/Output Terminals
⑩ Output Power Terminals

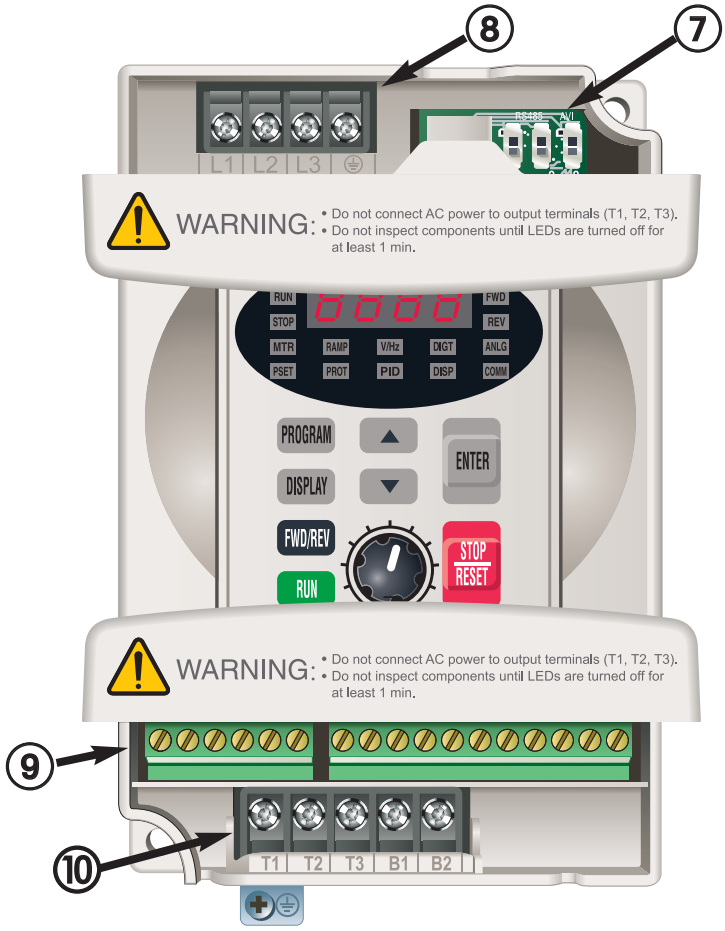

GS2 AC Drive Specifications

115V Class					
Model Name: GS2-xxx			**10P2**	**10P5**	**11P0**
Output Rating	**Maximum Motor Output**	**HP**	0.25	0.5	1.0
		kW	0.2	0.4	0.75
	Rated Output Current (A)		1.6	2.5	4.2
	Maximum Output Voltage		Three-phase 200 to 240V (x2 of input voltage)		
	Rated Output Frequency		0.1 to 400 Hz		
Input Rating	**Rated Voltage/Frequency**		Single-phase, 100 to 120 VAC, 50/60Hz		
	Rated Input Current (A)		6	9	16
	Voltage/Frequency Tolerance		Voltage: +/- 10%; Frequency: +/- 5%		
	Short Circuit Withstand (A, rms symmetrical)		5kA @ 120 VAC		
Watt Loss @ 100% I (W)			24	34	46
Weight (lbs.)			3.5	3.6	3.7

230V Class								
Model Name: GS2-xxx			**20P5**	**21P0**	**22P0**	**23P0**	**25P0**	**27P5**
Output Rating	**Maximum Motor Output**	**HP**	0.5	1.0	2.0	3.0	5.0	7.5
		kW	0.4	0.75	1.5	2.2	3.7	5.5
	Rated Output Current (A)		2.5	5.0	7.0	10	17	25
	Maximum Output Voltage		Three-phase 200 to 240V (proportional to input voltage)					
	Rated Output Frequency		0.1 to 400 Hz					
Input Rating	**Rated Voltage/Frequency**		Single/Three-phase, 200/208/220/230/240 VAC, 50/60 Hz				Three-phase, 200/208/220/230/240 VAC, 50/60 Hz	
	Rated Input Current (A)		6.3/3.2	11.5/6.3	15.7/9.0	27/12.5	19.6	28
	Voltage/Frequency Tolerance		Voltage: +/- 10%; Frequency: +/- 5%					
	Short Circuit Withstand (A, rms symmetrical)		5kA @ 240 VAC					
Watt Loss @ 100% I (W)			34	57	77	111	185	255
Weight (lbs.)			3.5	3.6	3.7	8.5	8.5	8.5

GS2 AC Drive Specifications (continued)

460V Class								
Model Name: GS2-xxx			**41P0**	**42P0**	**43P0**	**45P0**	**47P5**	**4010**
Output Rating	**Maximum Motor Output**	**HP**	1.0	2.0	3.0	5.0	7.5	10
		kW	0.8	1.5	2.2	4.0	5.5	7.5
	Rated Output Current (A)		3.0	4.0	5.0	8.2	13	18
	Maximum Output Voltage		Three-phase 380 to 480V (proportional to input voltage)					
	Rated Output Frequency		0.1 to 400 Hz					
Input Rating	**Rated Voltage/Frequency**		Three-phase 380/400/415/440/460/480 VAC 50/60Hz					
	Rated Input Current (A)		4.2	5.7	6.0	8.5	14	23
	Voltage/Frequency Tolerance		Voltage: +/- 10%; Frequency: +/- 5%					
	Short Circuit Withstand (A, rms symmetrical)		5kA @ 480 VAC					
Watt Loss @ 100% I (W)			73	86	102	170	240	255
Weight (lbs.)			3.5	3.6	3.7	8.5	8.5	8.5

575V Class								
Model Name: GS2-xxx			**51P0**	**52P0**	**53P0**	**55P0**	**57P5**	**5010**
Output Rating	**Maximum Motor Output**	**HP**	1.0	2.0	3.0	5.0	7.5	10
		kW	0.75	1.5	2.2	3.7	5.5	7.5
	Rated Output Current (A)		1.7	3.0	4.2	6.6	9.9	12.2
	Maximum Output Voltage		Three-phase 500 to 600V (proportional to input voltage)					
	Rated Output Frequency		0.1 to 400 Hz					
Input Rating	**Rated Voltage/Frequency**		Three-phase 500 to 600V					
	Rated Input Current (A)		2.4	4.2	5.9	7.0	10.5	12.9
	Voltage/Frequency Tolerance		Voltage: -15 to +10% ; Frequency: +/- 5%					
	Short Circuit Withstand (A, rms symmetrical)		5kA @ 600 VAC					
Watt Loss @ 100% I (W)			30	58	83	132	191	211
Weight (lbs.)			3.3	3.3	4.4	7.0	7.0	7.3

General Specifications			
Control Characteristics			
Control System			Pulse Width Modulation, Carrier frequency 1-12 kHz
Rated Output Frequency			1.0 to 400.0 Hz
Output Frequency Resolution			0.1 Hz
Overload Capacity			150% of rated current for 1 minute
Torque Characteristics			Includes auto-torque boost, auto-slip compensation, starting torque 125% @ 0.5 Hz / 150% @ 5.0 Hz
Braking Torque			20% without dynamic braking, 125% with optional braking resistor - braking transistor built-in
DC Braking			Operation frequency 60-0 Hz, 0 - 100% rated current, Start time 0.0 - 5.0 seconds, Stop time 0.0 - 25.0 seconds
Acceleration/Deceleration Time			0.1 to 600 seconds (linear or non-linear acceleration/deceleration), second acceleration/deceleration available
Voltage/Frequency Pattern			Settings available for Constant Torque - low & high starting torque, Variable Torque - low & high starting torque, and user configured
Stall Prevention Level			20 to 200% or rated current
Operation Specification			
Inputs	**Frequency Setting**	**Keypad**	Setting by <UP> or <DOWN> buttons or potentiometer
		External Signal	Potentiometer - 3-5 kΩ, 0 to 10 VDC (input impedance 10 kΩ), 0 to 20 mA / 4 to 20 mA (input impedance 250Ω). Multi-Speed Inputs 1 to 3, RS-232C/RS-485 communication interface
	Operation Setting	**Keypad**	Setting by <RUN>, <FWD/REV>, <STOP/RESET> buttons
		External Signal	Forward/Stop, Reverse/Stop (run/stop, fwd/rev), 3-wire control, Serial Communication RS-232C & RS-485 (Modbus RTU)
	Input Terminals	**Digital**	6 user-programmable: FWD/STOP, REV/STOP, RUN/STOP, REV/FWD, RUN momentary (N.O.), STOP momentary (N.C.), External Fault (N.O./N.C.), External Reset, Multi-Speed Bit (1-3), Jog, External Base Block (N.O./N.C.), Second Accel/Decel Time, Speed Hold, Increase Speed, Decrease Speed, Reset Speed to Zero, PID Disable (N.O.), PID Disable (N.C.), Input Disable
		Analog	1 user-configurable, 0 to 10 VDC (input impedance 10 kΩ), 0 to 20 mA / 4 to 20 mA (input impedance 250Ω), 10 bit resolution
Outputs	**Output Terminals**	**Digital**	2 user-programmable: Inverter Running, Inverter Fault, At Speed, Zero Speed, Above Desired Frequency, Below Desired Frequency, At Maximum Speed, Over Torque Detected, Above Desired Current, Below Desired Current, PID Deviation Alarm
		Analog	1 user-programmable, 0 to 10 VDC (max load 2mA), 8 bit resolution frequency, current, process variable PV
	Operating Functions		Automatic voltage regulation, voltage/frequency characteristics selection, non-linear acceleration/deceleration, upper and lower frequency limiters, 7-stage speed operation, adjustable carrier frequency (1 to 12 kHz), PID control, skip frequencies, analog gain & bias adjustment, jog, electronic thermal relay, automatic torque boost, trip history, software protection

General Specifications (continued)		
Protective Functions		Electronic Thermal, Overload Relay, Auto Restart after Fault, Momentary Power Loss, Reverse Operation Inhibit, Auto Voltage Regulation, Over-Voltage Trip Prevention, Auto Adjustable Accel/Decel, Over-Torque Detection Mode, Over-Torque Detection Level, Over-Torque Detection Time, Over-Current Stall Prevention during Acceleration, Over-Current Stall Prevention during Operation
Operator Interface	**Operator Devices**	8-key, 4-digit, 7-segment LED, 14 status LEDs, potentiometer
	Programming	Parameter values for setup and review, fault codes
	Status Display	Actual Operating Frequency, RPM, Scaled Frequency, Amps, % Load, Output Voltage, DC Bus Voltage, Process Variable, Set-point Frequency
	Key Functions	RUN, STOP/RESET, FWD/REV, PROGRAM, DISPLAY, <UP>, <DOWN>, ENTER
Environment	**Enclosure Rating**	Protected Chassis, IP20
	Ambient Temperature	-10°C to 50°C (14°F to 122°F) -10°C to 40°C (14°F to 104°F) for models 7.5 hp (5.5 kW) and higher
	Storage Temperature	-20°C to 60°C (-4°F to 140°F) – during short term transportation period
	Ambient Humidity	20 to 90% RH (non-condensing)
	Vibration	9.8 m/s^2 (1G) less than 10 Hz, 5.9 m/s^2 (0.6G) 10 to 60 Hz
	Installation Location	Altitude 1000m or lower above sea level, keep from corrosive gas, liquid and dust
Options		Noise filter, input AC reactor, output AC reactor, cable for remote operator, programming software, Dynamic braking resistor, input fuses
Agency Approvals		UL & cUL listed; CE* *CE certification applies only to 115V, 230V, 460V class drives.

Chapter 2

Installation and Wiring

In This Chapter...

Ambient Conditions 2–2
Installation 2–3
Minimum Clearances and AirFlow 2–3
Dimensions 2–4
GS2 Circuit Connections 2–6
Danger 2–6
Main Circuit Wiring 2–8
Control Terminal Wiring 2–10
Basic Wiring Diagram 2–11
External Accessories 2–12

Ambient Conditions

The AC drive should be kept in the shipping carton before installation. In order to retain the warranty coverage, the AC drive should be stored properly when it is not to be used for an extended period of time. Some storage suggestions are:

- Store in a clean and dry location free from direct sunlight or corrosive fumes.
- Store within an ambient temperature range of -20°C to +60°C.
- Store within a relative humidity range of 0% to 90% and non-condensing environment.
- Store within an air pressure range of 86 kPA to 106 kPA.

Ambient Conditions	
Ambient Temperature	-10°C to 50°C (14°F to 122°F) for models below 7.5 hp (5.5 kW), -10°C to 40°C (14°F to 104°F) for models 7.5 hp (5.5 kW) and higher
Storage Temperature	-20° to 60°C (-4°F to 140°F)
Relative Humidity	0 to 90% (non-condensing)
Atmosphere Pressure	86 kPA to 106 kPA
Vibration	9.8 m/s^2 (1G) less than 10 Hz, 5.9 m/s^2 (0.6G) 10 to 60 Hz
Installation Location	Altitude 1000m or lower above sea level, keep from corrosive gas, liquid and dust
Enclosure Rating	IP20: Protection against contact by fingers. Protection against medium-size foreign objects

Installation

Improper installation of the AC drive will greatly reduce its life. Be sure to observe the following precautions when selecting a mounting location:

WARNING: Failure to observe these precautions may damage the drive and void the warranty!

- Do not mount the AC drive near heat-radiating elements or in direct sunlight.
- Do not install the AC drive in a place subjected to high temperature, high humidity, excessive vibration, corrosive gases or liquids, or airborne dust or metallic particles.
- Mount the AC drive securely on a flat, rigid, non-flammable surface.
- Mount the AC drive vertically and do not restrict the air flow to the heat sink fins.

WARNING: AC drives generate a large amount of heat which may damage them. Auxiliary cooling methods are typically required in order not to exceed maximum ambient temperatures.

Minimum Clearances and Air Flow

MAXIMUM AMBIENT TEMPERATURES MUST NOT EXCEED 50°C (122°F), OR 40°C (104°F) FOR MODELS 7.5 HP (5.5 KW) AND HIGHER!

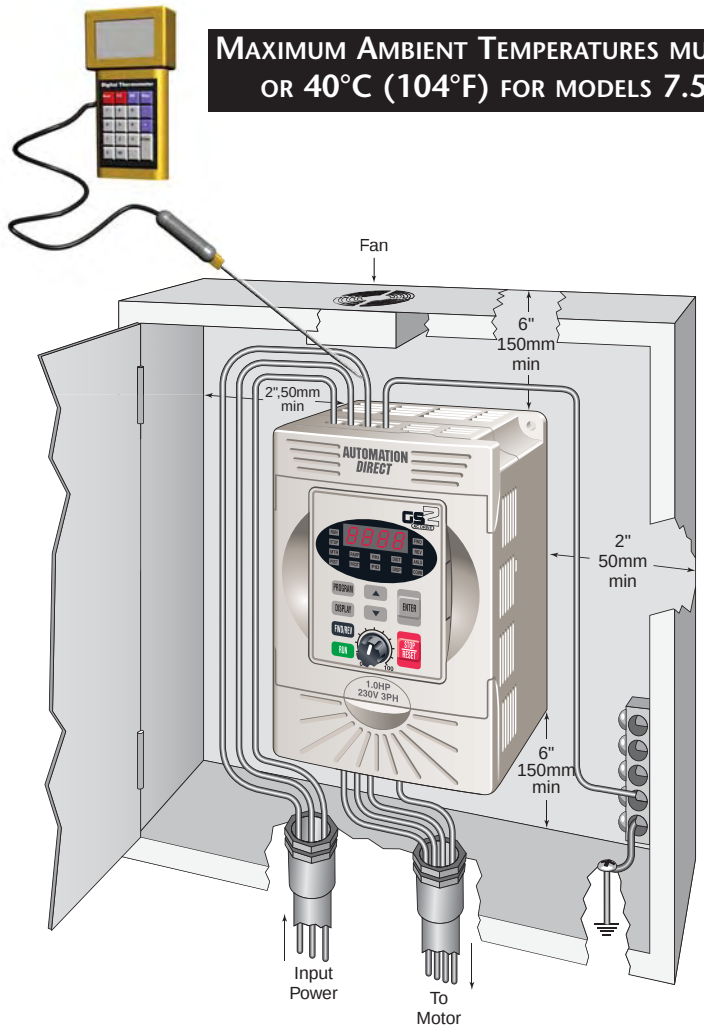

Dimensions

GS2-10P2, GS2-10P5, GS2-11P0,
GS2-20P5, GS2-21P0, GS2-22P0,
GS2-41P0, GS2-42P0, GS2-43P0,
GS2-51P0, GS2-52P0, GS2-53P0

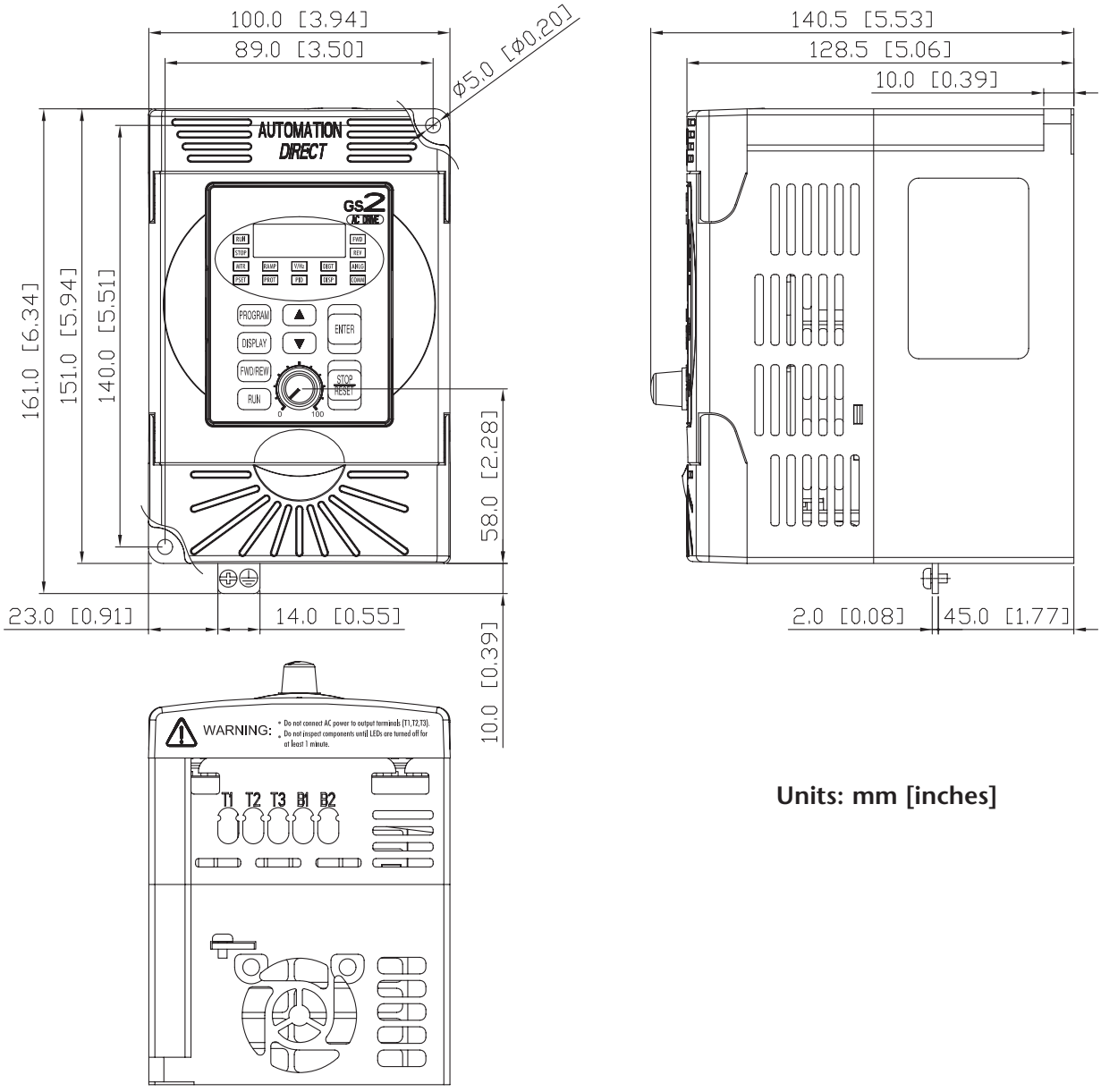

Units: mm [inches]

Dimensions (continued)

GS2-23P0, GS2-25P0, GS2-27P5,
GS2-45P0, GS2-47P5, GS2-4010,
GS2-55P0, GS2-57P5, GS2-5010

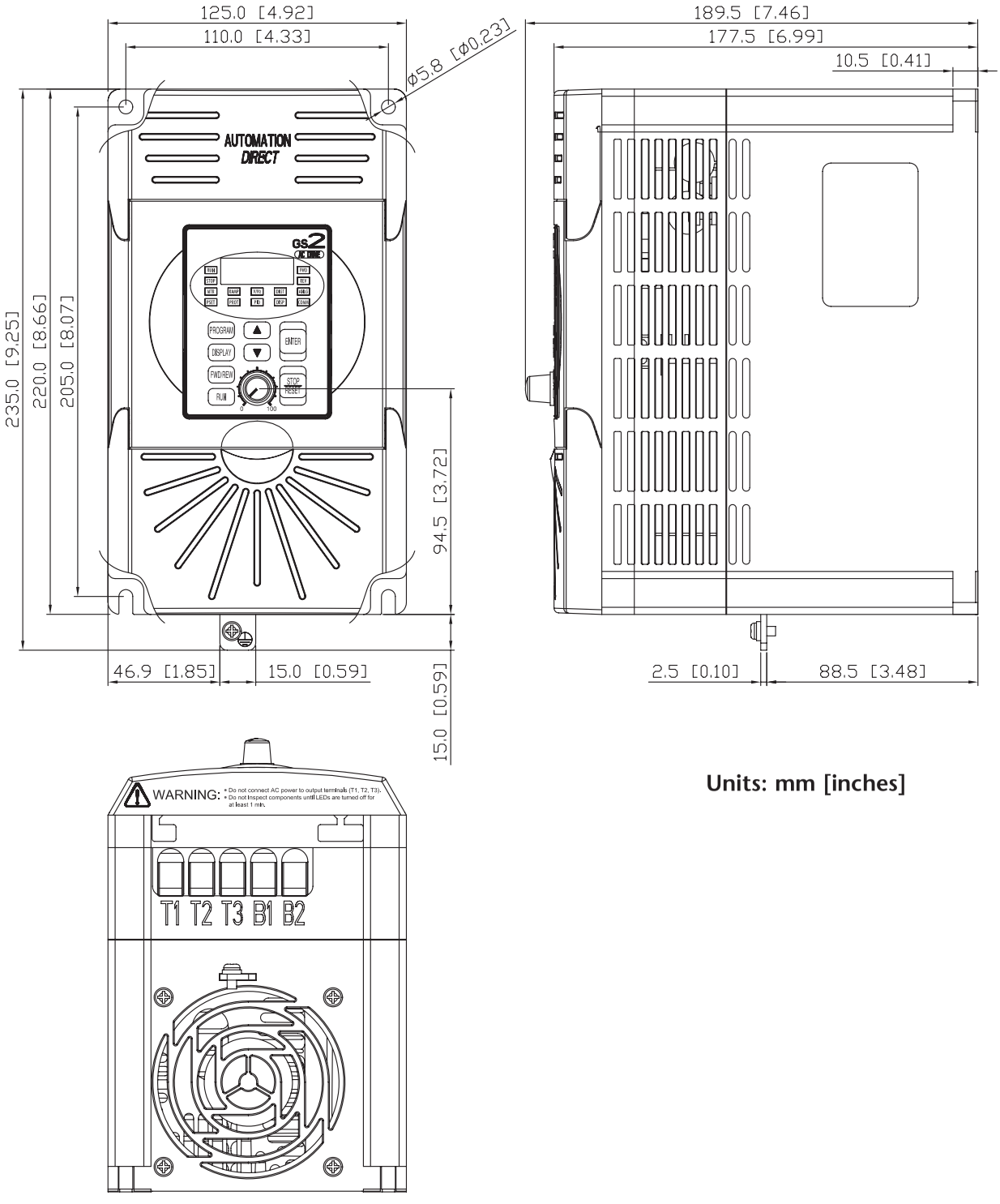

Units: mm [inches]

GS2 Circuit Connections

DANGER!

HAZARDOUS VOLTAGE! Before making any connection to the AC drive, disconnect all power to the AC drive, and wait five minutes for DC bus capacitors to discharge.

Warning: Any electrical or mechanical modification to this equipment without prior written consent of AutomationDirect.com, Inc. will void all warranties, may result in a safety hazard, and may void the UL listing.

WARNING: Do not connect the AC input power to the T1, T2, and T3 output terminals. This will damage the AC drive

WARNING: Tighten all screws to the proper torque rating. See "Main Circuit Wiring" later in this chapter.

Wiring Notes: PLEASE READ PRIOR TO INSTALLATION.

1. During installation, follow all local electrical, construction, and safety codes for the country in which the AC drive is to be installed.
2. Make sure the appropriate circuit protective devices (circuit breaker or fuses) are connected between the power supply and AC drive.
3. Make sure that the leads are connected correctly and the AC drive is properly grounded. (Ground resistance should not exceed 0.1Ω.)
4. Use ground leads that comply with AWG/MCM standards and keep them as short as possible.
5. Do not use a power circuit contactor or disconnect switch for run/stop control of the AC drive and motor. This will reduce the operating life cycle of the AC drive. Cycling a power circuit switching device while the AC drive is in run mode should be done only in emergency situations.
6. Multiple GS2 units can be installed in one location. All of the units should be grounded directly to a common ground terminal, or connected in parallel, as shown in the figure below. **Make sure there are no ground loops.**

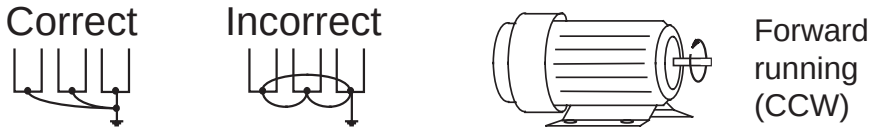

7. When the AC drive output terminals T1, T2, and T3 are connected to the motor terminals T1, T2, and T3, respectively, the motor will rotate counterclockwise (as viewed from the shaft end of the motor) when a forward operation command is received. To reverse the direction of motor rotation, switch the connections of any of the two motor leads.
8. Make sure that the power source is capable of supplying the correct voltage and required current to the AC drive.

9. Do not attach or remove wiring when power is applied to the AC drive.
10. Do not inspect components unless inside "POWER" lamp is turned off.
11. Do not monitor the signals on the circuit board while the AC drive is in operation.
12. For the 115V single-phase rated AC drives, AC power must be connected to input terminals L1 and L2. For the 230V single-phase rated AC drives, AC power can be connected to any two of the three input terminals L1, L2, and L3. **Note: This AC drive is not intended for use with single-phase motors.**
13. Route the power and control wires separately, or at 90 degree angle to each other.
14. If a filter is required for reducing EMI (Electro-Magnetic Interference), install it as close as possible to the AC drive. EMI can also be reduced by lowering the Carrier Frequency.
15. If the AC drive is installed in a place where a load reactor is needed, install the filter close to the T1, T2, and T3 side of AC drive. Do not use a Capacitor, L-C Filter (Inductance-Capacitance), or R-C Filter (Resistance-Capacitance), unless approved by AutomationDirect.
16. When using a GFCI (Ground Fault Circuit Interrupt), select current sensor with sensitivity of 200 mA, and not less than 0.1-second detection to avoid nuisance tripping.

Motor Operation Precautions

1. If the AC drive is used to operate a standard 3-phase induction motor, the energy loss is greater than if using an inverter duty motor.
2. Avoid running a standard induction motor at low speed, which may cause the motor temperature to exceed the motor rating due to limited airflow produced by the motor's fan.
3. When the standard motor operates at low speed, the output load must be decreased.
4. If 100% output torque is desired at low speed, it may be necessary to use a special "inverter-duty" rated motor.

Short Circuit Withstand Current

Suitable for use on a circuit capable of delivering not more than 5,000 rms symmetrical Amperes. The maximum voltage is 120, 240, 480, and 600V for all 115, 230, 460, and 575V models, respectively. (An optional line reactor can be installed in the incoming power circuit to reduce the available short circuit current.)

Applicable Codes

All GS2 Series AC drives are Underwriters Laboratories, Inc. (UL) and Canadian Underwriters Laboratories (cUL) listed, and therefore comply with the requirements of the National Electrical Code (NEC) and the Canadian Electrical Code (CEC).

Installation intended to meet the UL and cUL requirements must follow the instructions provided in "Wiring Notes" as a minimum standard. Follow all local codes that exceed UL and cUL requirements. Refer to the technical data label affixed to the AC drive and the motor nameplate for electrical data.

The "Fuses and Fuse Kits" section in APPENDIX A, lists the recommended fuse part number for each GS2 Series part number. These fuses (or equivalent) must be used on all installations where compliance with U.L. standards is required.

Main Circuit Wiring

Main Circuit Terminals	
Terminal	Description
L1, L2, L3	Input Power
T1, T2, T3	AC Drive Output
B1, B2	Dynamic Braking Resistor (optional)
⏚	Ground

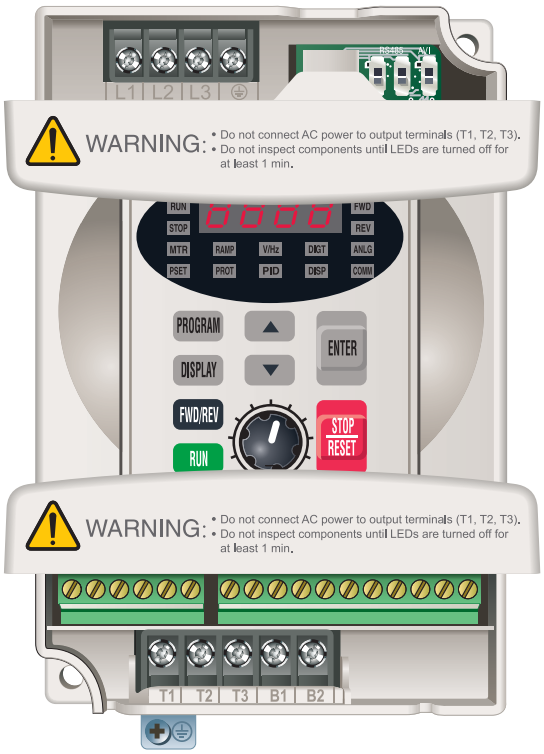

Output Power Connections

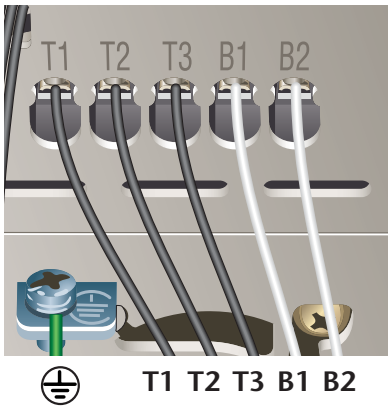

3-phase Input Power Connections

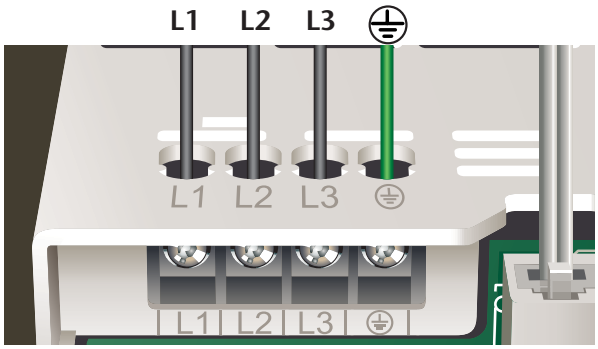

3-phase Input Power	
230V Class	200-240V ± 10%; 50/60 Hz ± 5%
460V Class	380-480V ± 10%; 50/60 Hz ± 5%
575V Class	500-600V -15/+10%; 50/60 Hz ± 5%

1-phase Input Power Connections*

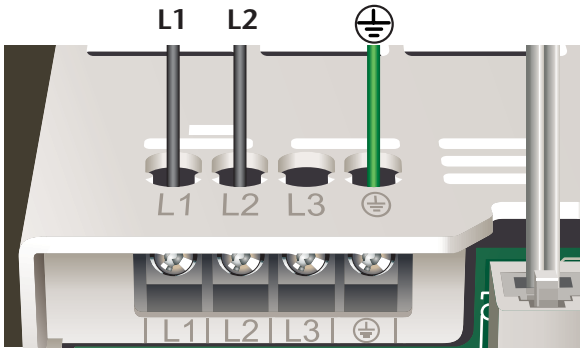

1-phase* Input Power	
115V Class	100-120V ± 10%; 50/60Hz ± 5%
230V Class	200-240V ± 10%; 50/60Hz ± 5%

** Only models GS2-10P2, GS2-10P5, GS2-11P0, GS2-20P5, GS2-21P0, GS2-22P0, and GS2-23P0 are rated for 1-phase input power*

Main Circuit Wiring (continued)

Main Circuit Wiring Specifications			
AC Drive Model	**Current Input/Output (A)**	**Wire Gauge (AWG)**	**Terminal Screw Torque (in·lbf)**
GS2-10P2 (1-phase)	6 / 1.6	12-14	12
GS2-10P5 (1-phase)	9 / 2.5		
GS2-11P0 (1-phase)	16 / 4.2	12	
GS2-20P5 (1-phase)	6.3 / 2.5	12-14	
GS2-20P5 (3-phase)	3.2 / 2.5		
GS2-21P0 (1-phase)	11.5 / 5.0		
GS2-21P0 (3-phase)	6.3 / 5.0		
GS2-22P0 (1-phase)	15.7 / 7.0	12	
GS2-22P0 (3-phase)	9 / 7.0	12-14	
GS2-23P0 (1-phase)	27 / 10	8	13
GS2-23P0 (3-phase)	12.5 / 10	8-12	
GS2-25P0	19.6 / 17	8-10	
GS2-27P5	28 / 25	8	
GS2-41P0	4.2 / 3.0	12-14	12
GS2-42P0	5.7 / 4.0		
GS2-43P0	6.0 / 5.0		
GS2-45P0	8.5 / 8.2	8-14	13
GS2-47P5	14 / 13	8-12	
GS2-4010	23 / 18	8-10	
GS2-51P0	2.4 / 1.7	12-14	12
GS2-52P0	4.2 / 3.0		
GS2-53P0	5.9 / 4.2		
GS2-55P0	7.0 / 6.6	8-14	13
GS2-57P5	10.5 / 9.9		
GS2-5010	12.9 / 12.2	8-12	

NOTE: Use 75°C (or higher) copper wire only.

Control Terminal Wiring

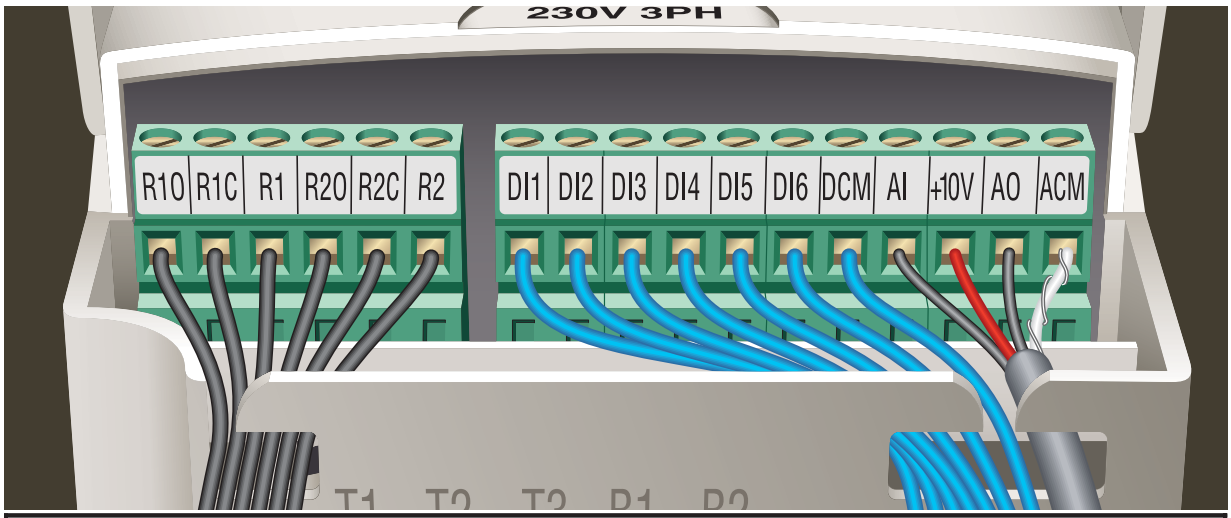

Control Circuit Terminals		
Terminal Symbol	**Description**	**Remarks**
R1O	Relay Output 1 Normally Open	120 VAC / 24 VDC @ 5A 230 VAC @ 2.5A
R1C	Relay Output 1 Normally Closed	
R1	Relay Output 1 Common	
R2O	Relay Output 2 Normally Open	
R2C	Relay Output 2 Normally Closed	
R2	Relay Output 2 Common	
DI1	Digital Input 1	Input Voltage: Internally Supplied *(see WARNING below)* Input Voltage Range: 4-12V Minimum ON Current: 22 mA max Maximum OFF Current: 1.1 mA also see "Basic Wiring Diagram" on next page.
DI2	Digital Input 2	
DI3	Digital Input 3	
DI4	Digital Input 4	
DI5	Digital Input 5	
DI6	Digital Input 6	
DCM	Digital Common	
AI	Analog Input	0 to +10 V Input 0 to 20 mA Input, or 4 to 20 mA Input
+10V	Internal Power Supply	+10 VDC (10 mA maximum load)
AO	Analog Output	0 to +10V Output (2mA maximum load)
ACM	Analog Common	

Warning: Do NOT connect external voltage sources to the Digital Inputs. Permanent damage may result.

Note: Use twisted-shielded, twisted-pair, or shielded-lead wires for the control signal wiring. It is recommended to run all signal wiring in a separate steel conduit. The shield wire should be connected only at the AC drive. Do not connect shield wire on both ends.

Basic Wiring Diagram

Note: Users must connect wiring according to the circuit diagram shown below.

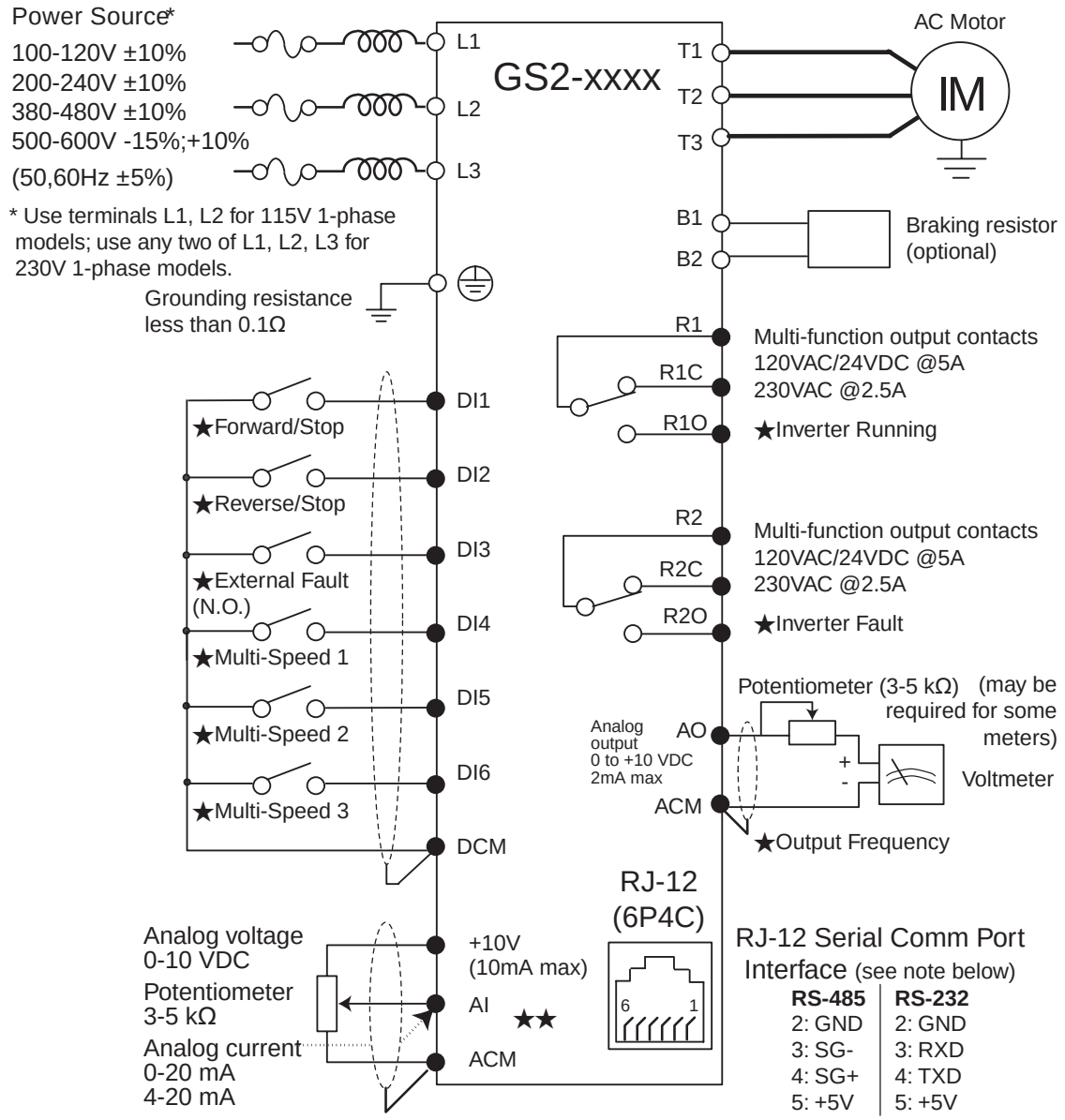

★Factory default setting

★★Factory default source of frequency command is via the keypad potentiometer

○ Main circuit (power) terminals ● Control circuit terminal ⫩ Shielded leads

WARNING: Do not plug a modem or telephone into the GS2 RJ-12 Serial Comm Port, or permanent damage may result. Terminals 2 and 5 should not be used as a power source for your communication connection.

External Accessories

Refer to Appendix A for information regarding external accessories.

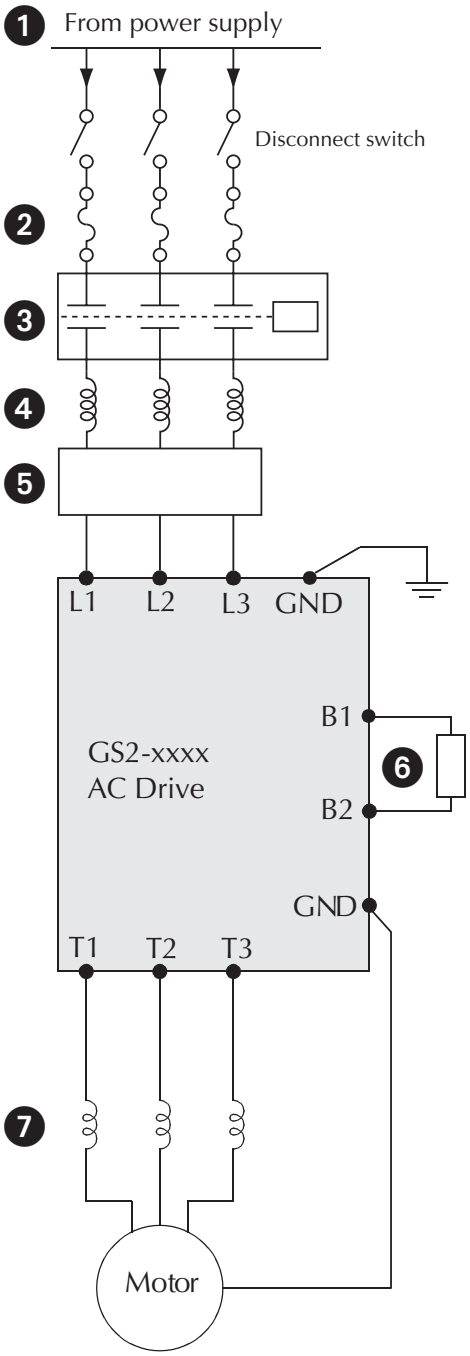

1 Power Supply
Please follow the specific power supply requirements shown in CHAPTER 1

2 Fuses
Input fuses protect the AC drive from excessive input current due to line surges, short circuits, and ground faults. They are recommended for all installations and may be required for UL-listed installations.

3 Contactor (Optional)
Do not use a contactor or disconnect switch for run/stop control of the AC drive and motor. This will reduce the operating life cycle of the AC drive. Cycling a power circuit switching device while the AC drive is in run mode should be done only in emergency situations.

4 AC Line Reactor (Optional)
Input line reactors protect the AC drive from transient overvoltage conditions typically caused by utility capacitor switching. Input line reactors also reduce the harmonics associated with AC drives, and are recommended for all installations.

5 EMI filter (Optional)
Input EMI filters reduce electromagnetic interference or noise on the input side of the AC drive. They are required for CE compliance and recommended for installations prone to or sensitive to electromagnetic interference.

6 Braking Resistors (Optional)
Dynamic braking allows the AC drive to produce additional braking (stopping) torque. AC drives can typically produce between 15% & 20% braking torque without the addition of any external components. The addition of optional braking may be required for applications that require rapid deceleration or high inertia loads.

7 AC Line Reactor (Optional)
Output line (load) reactors protect the motor insulation against AC drive short circuits and IGBT reflective wave damage, and also allow the motor to run cooler by smoothing the motor current waveform. They are recommended for operating "non-inverter-duty" motors, and for any motors when the length of wiring between the AC drive and motor exceeds 75 feet.

Note: Please refer to Appendix A for specifications on GS2 AC Drive Accessories.

Chapter 3

Keypad Operation and Quickstart

In This Chapter...

The GS2 Digital Keypad 3–2
- LED Display 3–2
- LED Indicators 3–2
- Function Keys 3–3
- Displaying the Status of the GS2 AC Drive 3–4
- Programming the GS2 AC Drive 3–5

GS2 Quickstart 3–6
- Example 1: Constant torque (e.g. conveyors, compressors, etc.) .3–6
- Example 2: Variable torque (e.g. fans, centrifugal pumps, etc.) .3–11

The GS2 Digital Keypad

The digital keypad includes a 4-digit LED display, 14 LED Indicators, 8 function keys, and a potentiometer. The diagram below shows all of the features of the digital keypad and an overview of their functions.

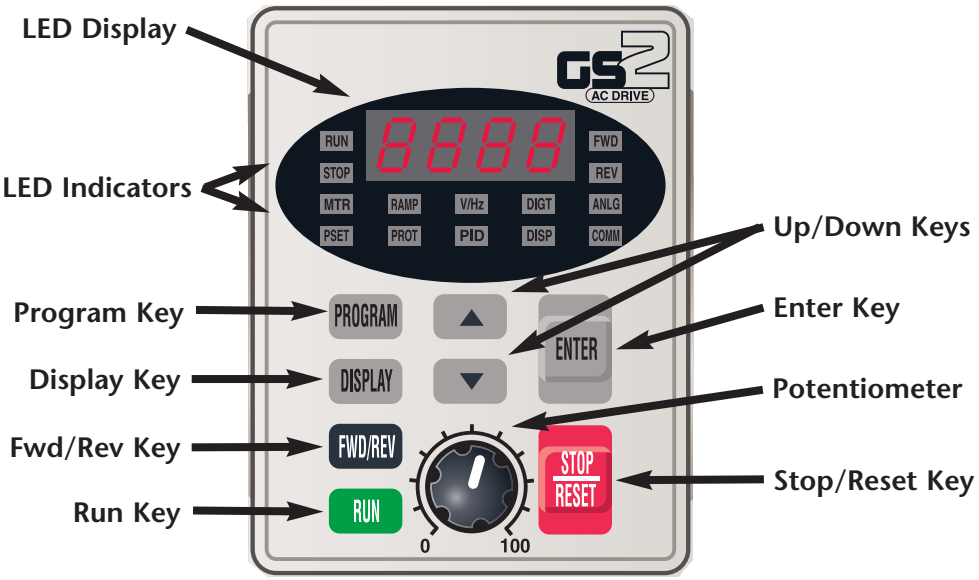

LED Display

The LED display shows the AC drive operation values and parameter settings.

LED Indicators

RUN — The RUN LED indicates the AC drive is in Run Mode. The RUN LED blinks when the drive is decelerating to stop.

STOP — The STOP LED indicates the AC drive is not in Run Mode. The STOP LED blinks when the drive is in Run Mode, but has zero speed reference.

FWD — The FWD LED indicates the AC drive is running the motor in the forward direction.

REV — The REV LED indicates the AC drive is running the motor in the reverse direction.

MTR — The MTR LED indicates the AC drive is in Program Mode and is displaying the Motor Parameters group (P 0.xx).

RAMP — The RAMP LED indicates the AC drive is in Program Mode and is displaying the Ramp Parameters group (P 1.xx).

V/Hz — The V/Hz LED indicates the AC drive is in Program Mode and displays the Volts/Hertz Parameters group (P 2.xx).

DIGT — The DIGT LED indicates the AC drive is in Program Mode and displays the Digital Parameters group (P 3.xx).

ANLG — The ANLG LED indicates the AC drive is in Program Mode and displays the Analog Parameters group (P 4.xx).

PSET The PSET LED indicates the AC drive is in Program Mode and displays the Preset Parameters group (P 5.xx).

PROT The PROT LED indicates the AC drive is in Program Mode and displays the Protection Parameters group (P 6.xx).

PID The PID LED indicates the AC drive is in Program Mode and displays the PID Parameters group (P 7.xx).

DISP The DISP LED indicates the AC drive is in Program Mode and displays the Display Parameters group (P 8.xx).

COMM The COMM LED indicates the AC drive is in Program Mode and displays the Communication Parameters group (P 9.xx).

Function Keys

PROGRAM Pressing the **PROGRAM** key repetitively cycles through the parameter groups. As you cycle through the parameter groups, an LED indicator lights to show you which parameter group is selected.

DISPLAY Pressing the **DISPLAY** key cycles through the operational values of the AC drive when the AC drive is not in Program Mode. When in Program Mode, the Display key will display the value of the selected parameter.

FWD/REV Pressing the **FWD/REV** key changes the direction in which the motor operates.

RUN Pressing the **RUN** key starts the AC drive operation. This key has no function if the AC drive is controlled by the external control terminals.

▲ ▼ Press the **UP/DOWN** arrow keys momentarily to change parameter settings. These keys may also be used to scroll through different operating values or parameters. Pressing the "Up" or "Down" key momentarily, changes the parameter settings in single-unit increments. To quickly run through the range of settings, press and hold the “Up” or "Down" key.

ENTER Press the **ENTER** key to view parameters and store parameter settings.

STOP RESET The **STOP/RESET** key is used to stop AC drive operation. If the AC drive has stopped due to a fault, clear the fault first, then press this key to reset the AC drive.

The **POTENTIOMETER** is for setting operation frequency.

Displaying the Status of the GS2 AC Drive

Press the display button on the keypad repeatedly to cycle through the status messages on the AC drive. The diagram below shows the order of the status messages as you cycle through them, and shows the definitions of the status messages. The status of the AC drive can be shown in RUN or STOP mode.

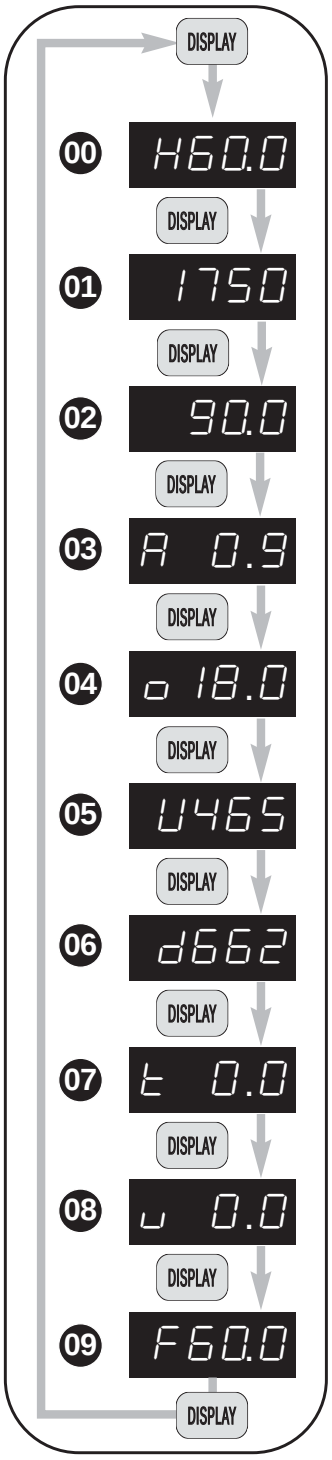

00 Actual Operating Frequency
Displays the actual operating frequency present at the T1, T2, and T3 terminals. *Example: 60.0Hz*

01 RPM
Displays the present *estimated* speed of the motor.
Example: 1750 rpm

02 Scaled Frequency
Displays the result of output frequency x P 8.01.
Example: 60Hz x 1.5 = 90.0

03 Amps
Displays the output current present at the T1, T2, and T3 terminals. *Example: 0.9A*

04 % Load
Displays the amount of load on the AC drive.
Example: (Output Current ÷ Drive Rated Current) x 100

05 Output Voltage
Displays the output voltage present at the T1, T2, and T3 terminals. *Example: 465V*

06 DC Bus Voltage
Displays the DC Bus Voltage. *Example: 662 VDC*

07 PID Setpoint
Displays the PID setpoint. *Note: It is possible to change the PID setpoint with the ▲ and ▼ keys when the PID setpoint value is displayed on the keypad. The PID function (P 7.00) must be enabled, and the PID Setpoint source (P 7.02) must be set to keypad (00).*

08 PID Feedback Signal (PV)
Displays the PID feed-back signal.

PID

NOTE:
The PID LED will flash when the ***PID Setpoint*** *or* ***Process Variable*** *is displayed.*

09 Setpoint Frequency
Displays the frequency setting of the AC drive.
Example: 60.0 Hz

Programming the GS2 AC Drive

The GS2 AC Drive parameters are organized into 10 different groups according to their functions. The illustration below shows you how to navigate through the parameter groups and parameter settings. For a complete list of parameters, refer to CHAPTER 4.

1. Press the "Program" key repetitively to cycle through the parameter groups. As you cycle through the parameter groups, an LED indicator will light to show you which parameter group is selected.
2. Once you reach the desired parameter group, use the UP/DOWN keys to cycle through the available parameters in that group.
3. When you reach your desired parameter, press the "ENTER" key to select the parameter.
4. Use the UP/DOWN keys to cycle through the available settings.
5. Press the "ENTER" key to select the setting. The word "End" will display on the digital display to signal that the parameter value has been changed. (If you want to back out without changing the parameter, press the "PROGRAM" key.)
6. After the parameter value has been set, the AC drive will cycle to the next parameter in the selected group.

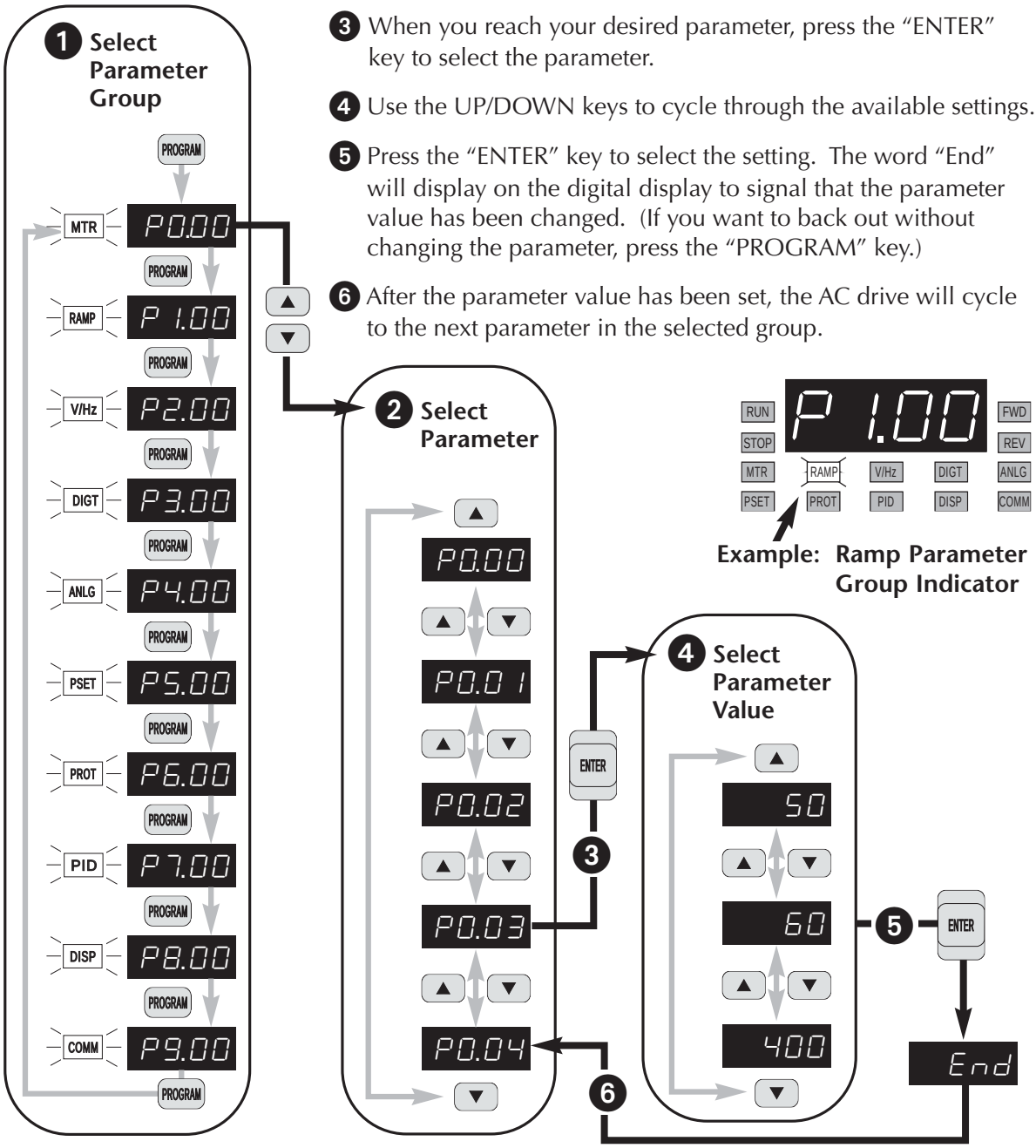

GS2 Quickstart

The following examples will help you quickly set up your GS2 AC Drive for two common applications. The first example applies to an application that requires constant torque, and the second example requires variable torque.

Note: For a complete list and description of the parameters for the GS2 Series AC drives, refer to CHAPTER 4.

Example 1: Constant torque (e.g. conveyors, compressors, etc.)

In this example, the AC drive needs to operate a motor that is connected to a conveyor. In order to decide which parameters need modifications, we will make a list of the needs for the application.

Application Needs

- The AC drive must control a 460V, 1hp inverter duty motor. We will use a model GS2-41P0 drive for this application. An example of the motor nameplate is shown below.

INVERTER DUTY MOTOR							
HP	1	Volts	460	PHASE	3	TYPE	P
RPM	1725	AMPS	2.6	HZ	60	SF	1.15
DESIGN	B			AMB	40°C	INSUL CLASS	F
DUTY	CONT			ENCL	TEFC	CODE	K

- The maximum speed for the motor is 2000 rpm.
- The motor should accelerate to maximum speed in 5 seconds.
- The motor should decelerate from maximum speed in 5 seconds.
- The motor will require a high torque when starting.
- The operation of the motor (start, stop, etc.) will be controlled by remote control terminals. All keys on the GS2 keypad should be disabled.
- The frequency of the AC drive will be determined by remote potentiometer that has a 0 to +10V signal.
- The display of the AC drive should default to the motor speed (rpm) when running.

Parameter Setup

In order to meet the needs of this application, the drive parameters should be set as follows:

P 0.00 Motor Nameplate Voltage Setting: 460

Range: 115V&230V class: 200/208/220/230/240 Default Setting: 240
460V class: 380/400/415/440/460/480 480
575V class: 380 to 637 575

This parameter setting is determined by the motor nameplate.

P 0.01 Motor Nameplate Amps Setting: 2.6

Range: Drive Rated Amps x .3 to Drive Rated Amps x 1.0 Default Setting: Drive Rating (A)

This parameter setting is determined by the motor nameplate..

P 0.02 Motor Base Frequency Setting: 60

Range: 50/60/400 Default Setting 60

This parameter setting is determined by the motor nameplate.

P 0.03 Motor Base RPM Setting: 1725

Range: 375 to 9999 rpm Default Setting: 1750

This parameter setting is determined by the motor nameplate.

P 0.04 Motor Maximum RPM Setting: 2000

Range: P 0.03 to 9999 rpm Default Setting: P 0.03

This parameter setting is determined by the needs of the application.

WARNING: The Motor Maximum RPM parameter (P 0.04) should never exceed the maximum rpm rating for the motor you are using. If this information is not readily available, consult your motor manufacturer.

P 1.00 Stop Methods — Setting: 00

Range: 00 Ramp to Stop
01 Coast to stop

Default Setting: 00

The Ramp to Stop setting causes the drive to stop the motor under power according to the Deceleration Time set in P 1.02. If the AC drive was set for Coast to Stop, the AC drive would ignore the Deceleration Time setting.

WARNING: If the Stop Method for the GS2 AC drive is set for Coast to Stop, the AC drive will ignore any setting you have for Deceleration Time (P 1.02).

P 1.01 Acceleration Time — Setting: 5.0

Range: 0.1 to 600 sec

Default Setting: 10 sec

The motor should accelerate from 0 rpm to base rpm (P 0.03) in 5 seconds.

P 1.02 Deceleration Time — Setting: 5.0

Range: 0.1 to 600 sec

Default Setting: 30 sec

The motor should decelerate from 2000 rpm (maximum speed) to 0 rpm in 5 seconds.

P 2.00 Volts/Hertz Settings — Setting: 01

Settings: 00 - General Purpose
01 - High Starting Torque
02 - Fans and Pumps
03 - Custom

Default Setting: 0.0

The GS2 Series AC drive has some predefined torque settings that meet the needs of most applications. A custom setting is available if needed. In this example, the application requires a high starting torque.

P 3.00 Source of Operation Command Setting: 02

Default Setting: 00

Settings
- 00 Operation Determined by Digital Keypad
- 01 Operation determined by external control terminals. Keypad STOP is enabled.
- 02 Operation determined by external control terminals. Keypad STOP is disabled.
- 03 Operation determined by RS-232/RS-485 interface. Keypad STOP is enabled.
- 04 Operation determined by RS-232/RS-485 interface. Keypad STOP is disabled.

The AC drive operation will be determined by external control terminals and the keypad stop will be disabled.

P 4.00 Source of Frequency Command Setting: 02

Default: 00

Settings:
- 00 Frequency determined by keypad potentiometer
- 01 Frequency determined by digital keypad up/down
- 02 Frequency determined by 0 to +10V input on AI terminal. Switch, SW1 must be set to AVI.

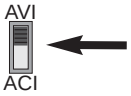

Switch SW1 must be set to AVI in order to use a 0 to +10V input

- 03 Frequency determined by 4 to 20mA input on AI terminal. Switch SW1 must be set to ACI.

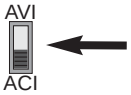

Switch SW1 must be set to ACI in order to use a 4 to 20mA input

- 04 Frequency determined by 0 to 20mA input on AI terminal. Switch SW1 must be set to ACI.

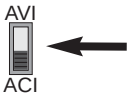

Switch SW1 must be set to ACI in order to use a 0 to 20mA input

- 05 Frequency determined by RS-232/RS-485 communication interface *(RS-232 or RS-485 communication selected by switches SW2 and SW3. Refer to CHAPTER 5 for details.)*

The frequency of the AC drive will be determined by an external potentiometer with a 0 to +10V signal.

P 6.00 Electronic Thermal Overload Relay Setting: 00

Default Setting: 00

Settings: 00 - Constant Torque (inverter/vector duty motor)
01 - Variable Torque (fan-cooled standard motor)
02 - Inactive

This function setting 00 is the standard overload protection curve used to protect inverter/vector duty motors.

P 8.00 User Defined Display Function Setting: 01

Default Setting: 00

Settings:	00	Output Frequency (Hz)
	01	Motor Speed (rpm)
	02	Output Frequency x P 8.01
	03	Output Current (A)
	04	Motor Output Current (%)
	05	Output Voltage(V)
	06	DC Bus Voltage (V)
	07	PID Setpoint
	08	PID Feedback (PV)
	09	Frequency Setpoint

The AC drive display will default to motor speed (rpm) when running.

Example 2: Variable torque (e.g. fans, centrifugal pumps, etc.)

In this example, the AC drive needs to operate a motor that is connected to a centrifugal pump. As in Example 1, we will make a list of the needs for the application in order to decide which parameters need modifications.

Application Needs

- The AC drive must control a 208V, 3hp fan-cooled standard duty motor. The AC drive model we will be using for this application is a GS2-23P0. An example of the motor nameplate is shown below.

STANDARD DUTY MOTOR							
HP	3	Volts	208	PHASE	3	TYPE	P
RPM	3525	AMPS	9.2	HZ	60	SF	1.15
DESIGN	B	AMB	40°C			INSUL CLASS	F
DUTY	CONT	ENCL	TEFC			CODE	K

- The maximum speed for the motor is 3600 rpm.
- The motor should accelerate to maximum speed in 20 seconds.
- The motor should coast to stop when operation is terminated.
- The motor will be turning a centrifugal pump.
- The operation of the motor (start, stop, etc.) will be controlled by the GS2 digital keypad.
- The frequency of the AC drive will be determined by the GS2 keypad potentiometer.
- The display of the AC drive should default to output current (A) when running.

Parameter Setup

In order to meet the needs of this application, the parameters should be set as follows:

P 0.00 **Motor Nameplate Voltage** **Setting: 208**

Range: 115V&230V class: 200/208/220/230/240 Default Setting: 240
460V class: 380/400/415/440/460/480 480
575V class: 380 to 637 575

This parameter setting is determined by the motor nameplate.

P 0.01 **Motor Nameplate Amps** **Setting: 9.2**

Range: Drive Rated Amps x .3 to Drive Rated Amps x 1.0 Default Setting: Drive Rating (A)

This parameter setting is determined by the motor nameplate.

P 0.02 Motor Base Frequency — Setting: 60

Range: 50/60/400 Default Setting 60

This parameter setting is determined by the motor nameplate.

P 0.03 Motor Base RPM — Setting: 3525

Range: 375 to 9999 rpm Default Setting: 1750

This parameter setting is determined by the motor nameplate.

P 0.04 Motor Maximum RPM — Setting: 3600

Range: P 0.03 to 9999 rpm Default Setting: P 0.03

This parameter setting is determined by the needs of the application.

WARNING: The Motor Maximum RPM parameter (P 0.04) should never exceed the maximum rpm rating for the motor you are using. If this information is not readily available, consult your motor manufacturer.

P 1.00 Stop Methods — Setting: 01

Range: 00 Ramp to Stop Default Setting: 00
01 Coast to stop

The application requires that this parameter be set to Coast to Stop.

WARNING: If the Stop Method for the GS2 AC drive is set for Coast to Stop, the AC drive will ignore any setting you have for Deceleration Time (P 1.02).

P 1.01 Acceleration Time — Setting: 20.0

Range: 0.1 to 600 sec Default Setting: 10 sec

The motor should accelerate from 0 rpm to Base rpm (P 0.03) in 20 seconds.

P 2.00 Volts/Hertz Settings — Setting: 02

Range: 00 - General Purpose Default Setting: 0.0
01 - High Starting Torque
02 - Fans and Pumps
03 - Custom

The GS2 Series AC drive has predefined torque settings that meet the needs of most applications. A custom setting is also available, if needed. In this example, the motor will be running a centrifugal pump.

P 3.00 Source of Operation Command Setting: 00

Default Setting: 00

Settings
- 00 Operation Determined by Digital Keypad
- 01 Operation determined by external control terminals. Keypad STOP is enabled.
- 02 Operation determined by external control terminals. Keypad STOP is disabled.
- 03 Operation determined by RS-232/RS-485 interface. Keypad STOP is enabled.
- 04 Operation determined by RS-232/RS-485 interface. Keypad STOP is disabled.

The AC drive operation will be determined by the Digital Keypad.

P 4.00 Source of Frequency Command Setting: 00

Default: 00

Settings:
- 00 Frequency determined by keypad potentiometer
- 01 Frequency determined by digital keypad up/down
- 02 Frequency determined by 0 to +10V input on AI terminal. Switch, SW1 must be set to AVI.

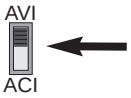

Switch SW1 must be set to AVI in order to use a 0 to +10V input

- 03 Frequency determined by 4 to 20mA input on AI terminal. Switch SW1 must be set to ACI.

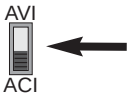

Switch SW1 must be set to ACI in order to use a 4 to 20mA input

- 04 Frequency determined by 0 to 20mA input on AI terminal. Switch SW1 must be set to ACI.

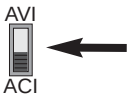

Switch SW1 must be set to ACI in order to use a 0 to 20mA input

- 05 Frequency determined by RS-232/RS-485 communication interface *(RS-232 or RS-485 communication selected by switches SW2 and SW3. Refer to CHAPTER 5 for details.)*

The frequency of the AC drive will be determined by keypad potentiometer.

P 6.00 Electronic Thermal Overload Relay Setting: 01

Default Setting: 00

Settings: 00 - Constant Torque (inverter/vector duty motor)
01 - Variable Torque (fan-cooled standard motor)
02 - Inactive

This function setting 01 is used to derate the AC drive output current overload protection to protect a fan-cooled standard motor running at low speeds.

P 8.00 User Defined Display Function Setting: 03

Default Setting: 00

Settings:

	00	Output Frequency (Hz)
	01	Motor Speed (rpm)
	02	Output Frequency x P 8.01
	03	Output Current (A)
	04	Motor Output Current (%)
	05	Output Voltage(V)
	06	DC Bus Voltage (V)
	07	PID Setpoint
	08	PID Feedback (PV)
	09	Frequency Setpoint

The AC drive display will default to indicate Output Current (A) when running.

Note: For a complete list and description of the parameters for the GS2 Series AC drives, refer to CHAPTER 4.

AC Drive Parameters

In This Chapter...

GS2 Parameter Summary 4–2
Detailed Parameter Listings 4–11
Motor Parameters 4–11
Ramp Parameters 4–13
Volts/Hertz Parameters 4–19
Digital Parameters 4–22
Setting Explanations for parameters P3.02 - P3.05 4–24
Analog Parameters 4–32
Analog Input Examples 4–34
Preset Parameters 4–41
Protection Parameters 4–43
PID Parameters 4–51
Display Parameters 4–55
Communication Parameters 4–56

GS2 Parameter Summary

Motor Parameters			
GS2 Parameter	**Description**	**Range**	**Default**
P0.00	Motor Nameplate Voltage	115V/230V: 200/208/220/230/240 460V: 380/400/415/440/460/480 575V: 380 to 637	240 480 575
P0.01	Motor Nameplate Amps	Drive Rated Amps X .3 to 1.0	Drive Rated Amps x 1.0
P0.02	Motor Base Frequency	50/60/400	60
P0.03	Motor Base RPM	375 to 9999 RPM	1750
P0.04	Motor Maximum RPM	P0.03 to 9999 RPM	P0.03

Ramp Parameters			
P1.00	Stop Methods	00: Ramp to Stop 01: Coast to Stop	00
◆ **P1.01**	Acceleration Time 1	0.1 to 600.0 sec	10.0
◆ **P1.02**	Deceleration Time 1	0.1 to 600.0 sec	30.0
P1.03	Accel S-curve	0 to 7	00
P1.04	Decel S-curve	0 to 7	00
◆ **P1.05**	Acceleration Time 2	0.1 to 600.0 sec	10.0
◆ **P1.06**	Deceleration Time 2	0.1 to 600.0 sec	30.0
P1.07	Select method to use 2nd Accel/Decel	00: RMP2 from DI terminal 01: Transition Frequencies P1.08 & P1.09	00
P1.08	Accel 1 to Accel 2 frequency transition	0.0 to 400.0 Hz	0.0
P1.09	Decel 2 to Decel 1 frequency transition	0.0 to 400.0 Hz	0.0
P1.10	Skip Frequency 1	0.0 to 400.0 Hz	0.0
P1.11	Skip Frequency 2	0.0 to 400.0 Hz	0.0
P1.12	Skip Frequency 3	0.0 to 400.0 Hz	0.0
P1.17	Skip Frequency Band	0.0 to 20.0 Hz	0.0
P1.18	DC Injection Current Level	00 to 100 %	00
P1.20	DC Injection during Start-up	0.0 to 5.0 sec	0.0
P1.21	DC Injection during Stopping	0.0 to 25.0 sec	0.0
P1.22	Start-point for DC Injection	0.0 to 60.0 Hz	0.0

◆ Parameter can be set during RUN Mode.

Volts/Hertz Parameters			
GS2 Parameter	**Description**	**Range**	**Default**
P2.00	Volts/Hertz Settings	00: General Purpose 01: High Starting Torque 02: Fans and Pumps 03: Custom	00
◆ **P2.01**	Slip Compensation	0.0 to 10.0	0.0
◆ **P2.02**	Auto-torque Boost	00 to 10	00
P2.04	Mid-point Frequency	0.1 to 400 Hz	1.5
P2.05	Mid-point Voltage	115V/230V: 2.0 to 255V 460V: 2.0 to 510V 575V: 2.0 to 637V	10.0 20.0 24.0
P2.06	Min. Output Frequency	0.1 to 20.0 Hz	1.50
P2.07	Min. Output Voltage	115V/230V: 2.0 to 50.0V 460V: 2.0 to 100.0V 575V: 2.0 to 130.6V	10.0 20.0 24.0
P2.08	PWM Carrier Frequency	115V/230V/460V 01 to 15 kHz 575V 01 to 10 kHz	12 6

Digital Parameters			
P3.00	Source of Operation Command	00: Operation determined by digital keypad 01: Operation determined by external control terminals, keypad STOP is enabled 02: Operation determined by external control terminals, keypad STOP is disabled 03: Operation determined by RS-485 interface, keypad STOP is enabled 04: Operation determined by RS-485 interface, keypad STOP is disabled	00
P3.01	Multi-function Input Terminals (DI1 - DI2)	00: DI1 - FWD / STOP, DI2 - REV / STOP 01: DI1 - RUN / STOP, DI2- REV / FWD 02: DI1 - RUN momentary (N.O.) DI2 - REV / FWD DI3 - STOP momentary (N.C.)	00

◆ Parameter can be set during RUN Mode.

Digital Parameters (cont.)			
GS2 Parameter	**Description**	**Range**	**Default**
P3.02	Multi-function Input (DI3)	00: External Fault (N.O.) 01: External Fault (N.C.) 02: External Reset 03: Multi-Speed/PID SP Bit 1 04: Multi-Speed/PID SP Bit 2 05: Multi-Speed/PID SP Bit 3 06: Reserved 07: Reserved 08: Reserved 09: Jog 10: External Base Block (N.O.) 11: External Base Block (N.C.) 12: Second Accel/Decel Time 13: Speed Hold 14: Increase Speed 15: Decrease Speed 16: Reset Speed to Zero 17: PID Disable (N.O.) 18: PID Disable (N.C.) 99: Input Disable	00
P3.03	Multi-function Input (DI4)		03
P3.04	Multi-function Input (DI5)		04
P3.05	Multi-function Input (DI6)		05
P3.11	Multi-Function Output Terminal 1	00: AC Drive Running 01: AC Drive Fault 02: At Speed 03: Zero Speed 04: Above Desired Frequency 05: Below Desired Frequency 06: At Maximum Speed 07: Over torque detected 08: Above Desired Current 09: Below Desired Current 10: PID Deviation Alarm	00
P3.12	Multi-Function Output Terminal 2		01
◆ **P3.16**	Desired Frequency	0.0 to 400.0 Hz	0.0
◆ **P3.17**	Desired Current	0.0 to <Drive Rated Amps>	0.0
◆ **P3.18**	PID Deviation Level	1.0 to 50.0 %	10.0
◆ **P3.19**	PID Deviation Time	0.1 to 300.0 sec	5.0

◆ Parameter can be set during RUN Mode.

Analog Parameters			
GS2 Parameter	**Description**	**Range**	**Default**
P4.00	Source of Frequency Command	00: Frequency determined by keypad potentiometer 01: Frequency determined by digital keypad up/down 02: Frequency determined by 0 to +10V input on AI terminal with jumpers 03: Frequency determined by 4 to 20mA input on AI terminal with jumpers 04: Frequency determined by 0 to 20mA input on AI terminal with jumpers 05: Frequency determined by RS-232C/ RS-485 communication interface	00
P4.01	Analog Input Offset Polarity	00: No Offset 01: Positive Offset 02: Negative Offset	00
◆ **P4.02**	Analog Input Offset	0.0 to 100.0%	0.0
◆ **P4.03**	Analog Input Gain	0.0 to 300.0%	100.0
P4.04	Analog Input Reverse Motion Enable	00: Forward Motion Only 01: Reverse Motion Enable	00
P4.05	Loss of ACI Signal (4-20mA)	00: Decelerate to 0Hz 01: Stop immediately and display error code "EF" 02: Continue operation by the last frequency command	00
◆ **P4.11**	Analog Output Signal	00: frequency Hz 01: Current A 02: PV	00
◆ **P4.12**	Analog Output Gain	00 to 200%	100

Presets			
◆ **P5.00**	Jog	0.0 to 400.0 Hz	6.0
◆ **P5.01**	Multi-Speed 1	0.0 to 400.0 Hz	0.0
◆ **P5.02**	Multi-Speed 2	0.0 to 400.0 Hz	0.0
◆ **P5.03**	Multi-Speed 3	0.0 to 400.0 Hz	0.0
◆ **P5.04**	Multi-Speed 4	0.0 to 400.0 Hz	0.0
◆ **P5.05**	Multi-Speed 5	0.0 to 400.0 Hz	0.0
◆ **P5.06**	Multi-Speed 6	0.0 to 400.0 Hz	0.0
◆ **P5.07**	Multi-Speed 7	0.0 to 400.0 Hz	0.0

◆ Parameter can be set during RUN Mode.

Protection Parameters			
GS2 Parameter	**Description**	**Range**	**Default**
P6.00	Electronic Thermal Overload Relay	00: Constant Torque 01: Variable Torque 02: Inactive	00
P6.01	Auto Restart after Fault	00 to 10	00
P6.02	Momentary Power Loss	00: Stop operation after momentary power loss 01: Continue operation after momentary power loss, speed search from Speed Reference 02: Continue operation after momentary power loss, speed search from Minimum Speed	00
P6.03	Reverse Operation Inhibit	00: Enable Reverse Operation 01: Disable Reverse Operation	00
P6.04	Auto Voltage Regulation	00: AVR enabled 01: AVR disabled 02: AVR disabled during decel 03: AVR disabled during stop	00
P6.05	Over-Voltage Stall Prevention	00: Enable Over-voltage Stall Prevention 01: Disable Over-voltage Stall Prevention	00
P6.06	Auto Adjustable Accel/Decel	00: Linear Accel/Decel 01: Auto Accel, Linear Decel 02: Linear Accel, Auto Decel 03: Auto Accel/Decel 04: Auto Accel/Decel Stall Prevention (limited by P1.01, P1.02, P1.05, P1.06)	00
P6.07	Over-Torque Detection Mode	00: Disabled 01: Enabled during constant speed operation 02: Enabled during acceleration	00
P6.08	Over-Torque Detection Level	30 to 200%	150
P6.09	Over-Torque Detection Time	0.1 to 10.0	0.1
P6.10	Over-Current Stall Prevention during Acceleration	20 to 200%	150
P6.11	Over-Current Stall Prevention during Operation	20 to 200%	150
P6.12	Maximum Allowable Power Loss Time	0.3 to 5.0 sec	2.0
P6.13	Base-Block Time for Speed Search	0.3 to 5.0 sec	0.5
P6.14	Maximum Speed Search Current Level	30 to 200%	150
P6.15	Upper Bound of Output Frequency	0.1 to 400Hz	400
P6.16	Lower Bound of Output Frequency	0.0 to 400Hz	0.0
P6.30	Line Start Lockout	00: Enable Line Start Lockout 01: Disable Line Start Lockout	00

◆ Parameter can be set during RUN Mode.

Protection Parameters (cont.)			
GS2 Parameter	**Description**	**Range**	**Default**
P6.31	Present Fault Record	00: No Fault occurred 01: Over-current (oc) 02: Over-voltage (ov) 03: Overheat (oH) 04: Overload (oL) 05: Overload 1 (oL1) 06: Overload 2 (oL2) 07: External Fault (EF) 08: CPU failure 1 (CF1) 09: CPU failure 2 (CF2) 10: CPU failure 3 (CF3) 11: Hardware Protection Failure (HPF) 12: Over-current during accel (OCA) 13: Over-current during decel (OCd) 14: Over-current during steady state (OCn) 15:Ground fault or fuse failure (GFF) 16: Reserved 17: Input power 3-phase loss 18: External Base-Block (bb) 19: Auto Adjust accel/decel failure (cFA) 20: Software protection code (codE)	00
P6.32	Second Most Recent Fault Record		00
P6.33	Third Most Recent Fault Record		00
P6.34	Fourth Most Recent Fault Record		00
P6.35	Fifth Most Recent Fault Record		00
P6.36	Sixth Most Recent Fault Record		00

◆ Parameter can be set during RUN Mode.

PID Parameters			
GS2 Parameter	**Description**	**Range**	**Default**
P7.00	Input Terminal for PID Feedback	00: Inhibit PID operation 01: Forward-acting (heating loop) PID feedback, PV from AVI (0 to + 10V 02: Forward-acting (heating loop) PID feedback, PV from ACI (4 to 20mA) 03: Reverse-acting (cooling loop) PID feedback, PV from AVI (0 to +10V). 04: Reverse-acting (cooling loop) PID feedback, PV from ACI (4 to 20mA).	00
P7.01	PV 100% Value	0.0 to 999	100.0
P7.02	PID Setpoint Source	00: Keypad 01: Serial Communications	00
◆ **P7.10**	Keypad PID Setpoint	0.0 to 999	0.0
◆ **P7.11**	PID Multi-setpoint 1	0.0 to 999	0.0
◆ **P7.12**	PID Multi-setpoint 2	0.0 to 999	0.0
◆ **P7.13**	PID Multi-setpoint 3	0.0 to 999	0.0
◆ **P7.14**	PID Multi-setpoint 4	0.0 to 999	0.0
◆ **P7.15**	PID Multi-setpoint 5	0.0 to 999	0.0
◆ **P7.16**	PID Multi-setpoint 6	0.0 to 999	0.0
◆ **P7.17**	PID Multi-setpoint 7	0.0 to 999	0.0
◆ **P7.20**	Proportional Control	0.0 to 10.0	1.0
◆ **P7.21**	Integral Control	0.00 to 100.0 sec	1.00
◆ **P7.22**	Derivative Control	0.00 to 1.00 sec	0.00
P7.23	Upper Bound for Integral Control	00 to 100%	100
P7.24	Derivative Filter Time Constant	0.0 to 2.5 sec	0.0
P7.25	PID Output Frequency Limit	00 to 110%	100
P7.26	Feedback Signal Detection Time	0.0 to 3600 sec.	60
P7.27	PID Feedback Loss	00: Warn and AC Drive Stop 01: Warn and Continue Operation	00

Display Parameters			
◆ **P8.00**	User Defined Display Function	00: Output Frequency (Hz) 01: Motor Speed (RPM) 02: Output Freq. X P8.01 03: Output Current (A) 04: Motor Output Current (%) 05: Output Voltage (V) 06: DC Bus Voltage (V) 07: PID Setpoint 08: PID Feedback Signal (PV) 09: Frequency Setpoint	00
◆ **P8.01**	Frequency Scale Factor	0.01 to 160.0	1.0

◆ Parameter can be set during RUN Mode.

Communications Parameters			
GS2 Parameter	**Description**	**Range**	**Default**
P9.00	Communication Address	01 to 254	01
P9.01	Transmission Speed	00: 4800 baud 01: 9600 baud 02: 19200 baud 03: 38400 baud	01
P9.02	Communication Protocol	00: Modbus ASCII mode 7 data bits,no parity,2 stop bits 01: Modbus ASCII mode 7 data bits,even parity,1 stop bit 02: Modbus ASCII mode 7 data bits,odd parity,1 stop bit 03: Modbus RTU mode 8 data bits,no parity,2 stop bits 04: Modbus RTU mode 8 data bits,even parity,1 stop bit 05: Modbus RTU mode 8 data bits,odd parity,1 stop bit	00
P9.03	Transmission Fault Treatment	00: Display fault and continue operating 01: Display fault and RAMP to stop 02: Display fault and COAST to stop 03: No fault displayed and continue operating	00
P9.04	Time Out Detection	00: Disable 01: Enable	00
P9.05	Time Out Duration	0.1 to 60.0 seconds	0.5
◆ **P9.07**	Parameter Lock	00: All parameters can be set and read 01: All parameters are read-only	00
P9.08	Restore to Default	99: Restores all parameters to factory defaults	00
◆ **P9.11**	Block Transfer Parameter 1	P0.00 to P8.01, P9.99	P9.99
◆ **P9.12**	Block Transfer Parameter 2	P0.00 to P8.01, P9.99	P9.99
◆ **P9.13**	Block Transfer Parameter 3	P0.00 to P8.01, P9.99	P9.99
◆ **P9.14**	Block Transfer Parameter 4	P0.00 to P8.01, P9.99	P9.99
◆ **P9.15**	Block Transfer Parameter 5	P0.00 to P8.01, P9.99	P9.99
◆ **P9.16**	Block Transfer Parameter 6	P0.00 to P8.01, P9.99	P9.99
◆ **P9.17**	Block Transfer Parameter 7	P0.00 to P8.01, P9.99	P9.99
◆ **P9.18**	Block Transfer Parameter 8	P0.00 to P8.01, P9.99	P9.99
◆ **P9.19**	Block Transfer Parameter 9	P0.00 to P8.01, P9.99	P9.99
◆ **P9.20**	Block Transfer Parameter 10	P0.00 to P8.01, P9.99	P9.99
◆ **P9.21**	Block Transfer Parameter 11	P0.00 to P8.01, P9.99	P9.99
◆ **P9.22**	Block Transfer Parameter 12	P0.00 to P8.01, P9.99	P9.99

◆ Parameter can be set during RUN Mode.

Communications Parameters (continued)			
GS2 Parameter	**Description**	**Range**	**Default**
◆ **P9.23**	Block Transfer Parameter 13	P0.00 to P8.01	P9.99
◆ **P9.24**	Block Transfer Parameter 14	P0.00 to P8.01	P9.99
◆ **P9.25**	Block Transfer Parameter 15	P0.00 to P8.01	P9.99
◆ **P9.26**	Serial Comm Speed Reference	0.0 to 400.0 Hz	60.0
◆ **P9.27**	Serial Comm RUN Command	00: Stop 01: Run	00
◆ **P9.28**	Serial Comm Direction Command	00: Forward 01: Reverse	00
◆ **P9.29**	Serial Comm External Fault	00: No fault 01: External fault	00
◆ **P9.30**	Serial Comm Fault Reset	00: No action 01: Fault Reset	00
◆ **P9.31**	Serial Comm JOG Command	00: Stop 01: Jog	00
P9.39	Firmware Version	#.##	#.##
P9.41	GS Series Number	01: GS1 02: GS2 03: GS3	##
P9.42	Manufacturer Model Information	00: GS2-20P5 (230V 1ph/3ph 0.5hp) 01: GS2-21P0 (230V 1ph/3ph 1hp) 02: GS2-22P0 (230V 1ph/3ph 2hp) 03: GS2-23P0 (230V 1ph/3ph 3hp) 04: GS2-25P0 (230V 3ph 5hp) 05: GS2-27P5 (230V 3ph 7.5hp) 06: Reserved 07: GS2-41P0 (460V 3ph 1hp) 08: GS2-42P0 (460V 3ph 2hp) 09: GS2-43P0 (460V 3ph 3hp) 10: GS2-45P0 (460V 3ph 5hp) 11: GS2-47P5 (460V 3ph 7.5hp) 12: GS2-4010 (460V 3ph 10hp) 13: GS2-10P2 (115V 1ph 0.25hp) 14: GS2-10P5 (115V 1ph 0.5hp) 15: GS2-11P0 (115V 1ph 1hp) 16~20: Reserved 21: GS2-51P0 (575V 3ph 1hp) 22: GS2-52P0 (575V 3ph 2hp) 23: GS2-53P0 (575V 3ph 3hp) 24: GS2-55P0 (575V 3ph 5hp) 25: GS2-57P5 (575V 3ph 7.5hp) 26: GS2-5010 (575V 3ph 10hp)	##

◆ Parameter can be set during RUN Mode.

Detailed Parameter Listings

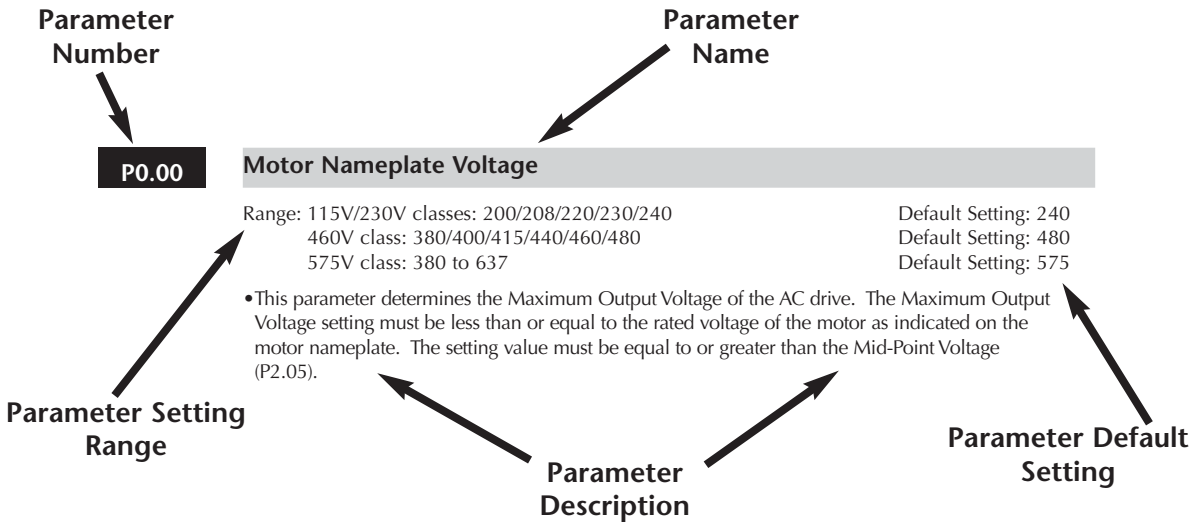

Note: If the ◆ symbol is found next to the parameter name, the parameter can be edited when the AC drive is in RUN Mode.

Motor Parameters

P0.00 Motor Nameplate Voltage

Range: 115V/230V classes: 200/208/220/230/240 Default Setting: 240
460V class: 380/400/415/440/460/480 480
575V class: 380 to 637 575

This parameter determines the Maximum Output Voltage of the AC drive. The Maximum Output Voltage setting must be less than or equal to the rated voltage of the motor as indicated on the motor nameplate. The setting value must be equal to or greater than the Mid-Point Voltage (P2.05).

P0.01 Motor Nameplate Amps

Range: Drive Rated Amps x 0.3 to Drive Rated Amps x 1.0 Default Setting: Drive Rating (A)

This parameter sets the output current to the motor, and is used by the drive to set the motor overload protection. Set this parameter value to the full load current listed on the motor nameplate. (Also refer to P6.00 to set overload curve type.)

P0.02 Motor Base Frequency

Range: 50/60/400 Default Setting 60

- This value should be set according to base frequency of the motor as indicated on the motor nameplate. Motor Base Frequency determines the volts per hertz ratio.

P0.03 Motor Base RPM

Range: 375 to 9999 RPM Default Setting: 1750

- This value should be set according to rated Base RPM of the motor as indicated on the motor nameplate.

P0.04 Motor Maximum RPM

Range: P0.03 to 9999 RPM Default Setting: P0.03

- This value should be set according to the desired maximum speed of the motor. This value should not exceed the motor's maximum rated speed.

WARNING: The Motor Maximum RPM parameter (P0.04) should never exceed the maximum speed rating for the motor you are using. If this information is not readily available, consult your motor manufacturer.

- This value cannot be set lower than Motor Base RPM (P0.03).

This parameter, along with P0.02 and P0.03, determines the Maximum Output Frequency of the AC Drive. The Maximum Output Frequency can be calculated as follows:

$$\textbf{Max. Output Frequency} = \left(\frac{\text{Motor Max. RPM (P0-04)}}{\text{Motor Base RPM (P0-03)}}\right) \text{x Base Frequency (P0-02)}$$

- If an output limit based on Maximum Output Frequency is desired, use the following equation to determine the corresponding value for Motor Maximum RPM:

$$\textbf{Motor Maximum RPM} = \left(\frac{\text{Max. Output Frequency}}{\text{Motor Base Frequency (P 0.02)}}\right) \text{x Motor Base RPM (P 0.03)}$$

Ramp Parameters

P1.00 Stop Methods

Range: 00 Ramp to Stop
01 Coast to stop

Default Setting: 00

This parameter determines how the motor is stopped when the AC drive receives a valid stop command.

- Ramp: The AC drive decelerates the motor to Minimum Output Frequency (P2.06) and then stops according to the deceleration time set in P1.02 or P1.06.
- Coast:The AC drive stops output instantly upon command, and the motor free runs until it comes to a complete stop.

Note: The drive application or system requirements will determine which stop method is needed.

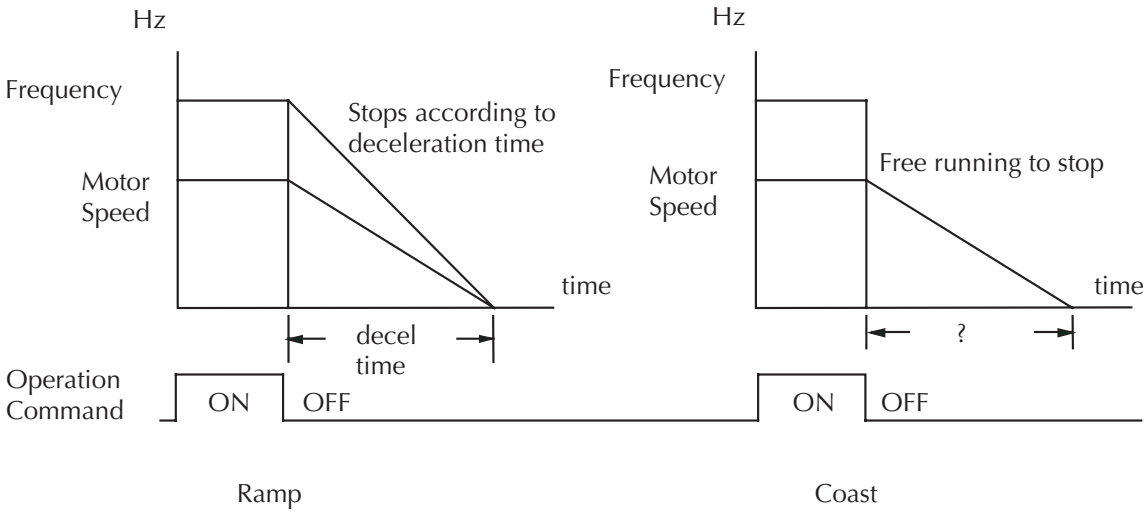

P1.01 ◆ Acceleration Time 1

Range: 0.1 to 600 sec

Default Setting: 10 sec

This parameter is used to determine the time required for the AC drive to ramp from 0 to its Maximum Motor RPM (P0.04). The rate is linear unless S-Curve is "Enabled."

P1.02 ◆ Deceleration Time 1

Range: 0.1 to 600 sec Default Setting: 30 sec

This parameter is used to determine the time required for the AC drive to decelerate from the Maximum Motor RPM (P0.04) down to 0Hz. The rate is linear unless S-Curve is "Enabled."

P1.03 Accel S-Curve

Range: 00 to 07 Default Setting: 00

This parameter is used whenever the motor and load need to be accelerated more smoothly. The Accel S-Curve may be set from 0 to 7 to select the desired acceleration S Curve.

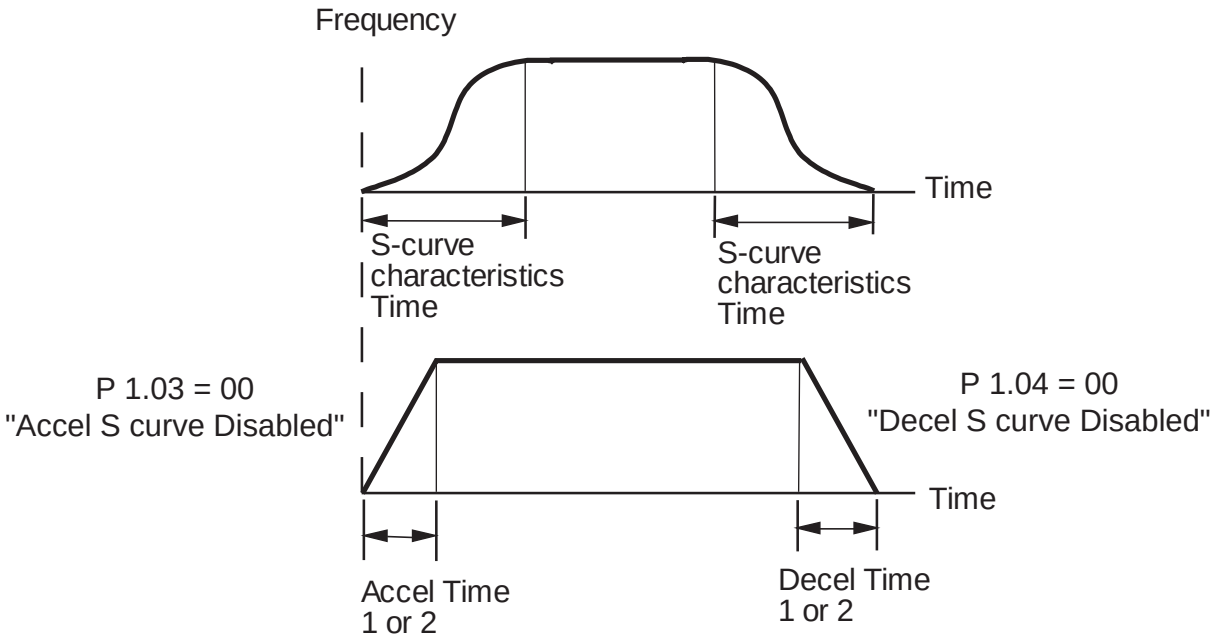

P1.04 Decel S-Curve

Range: 00 to 07 Default Setting: 00

This parameter is used whenever the motor and load need to be decelerated more smoothly. The Decel S-Curve may be set from 00 to 07 to select the desired deceleration S-Curve.

Note: From the diagram shown below, the original setting accel/decel time will be for reference when the function of the S-curve is enabled. The actual accel/decel time will be determined based on the S-curve selected (1 to 7).

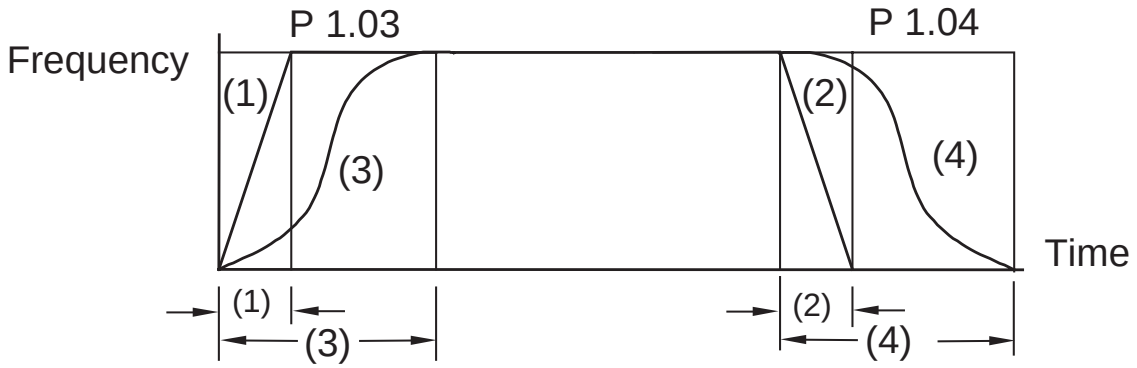

S curve is disabled in (1), (2)
P 1.03 sets S curve for (3)
P 1.04 sets S curve for (4)

P1.05 ◆ Acceleration Time 2

Range: 0.1 to 600 sec Default Setting: 10.0

- The Second Acceleration Time determines the time for the AC drive to accelerate from 0 RPM to Maximum Motor RPM (P0.04). Acceleration Time 2 (P1.05) can be selected using a multi-function input terminal or frequency transition (P1.07).

P1.06 ◆ Deceleration Time 2

Range: 0.1 to 600 sec Default Setting: 30 sec

- The Second Deceleration Time determines the time for the AC drive to decelerate from Maximum Motor RPM (P0.04) to 0 RPM. Deceleration Time 2 (P1.06) can be selected using a multi-function input terminal or frequency transition (P1.07).

P1.07 Select method for 2nd Accel/Decel

Range: 00: Second Accel/Decel from DI terminal
01: Frequency Transition
P1.08 & P1.09

Default Setting: 00

- The second set of acceleration and deceleration times P1.05 and P1.06 can be selected either with a multi-function input terminal programmed to Second Accel/Decel, or by the values of the transition frequencies P1.08 and P1.09

Second Accel/Decel Times selected with Multi-Function Input Terminal

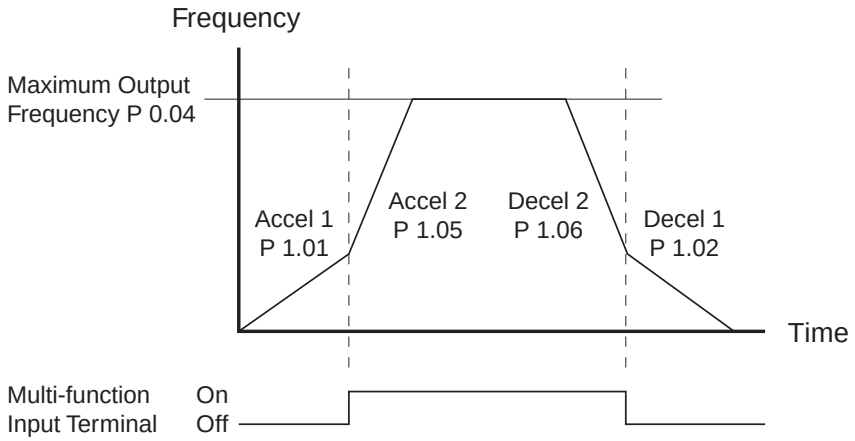

P1.08 Accel 1 to Accel 2 Frequency Transition

Range: 0.0 to 400.0 Hz

Default Setting: 0.0

Second Accel/Decel Times selected with Frequency Transition

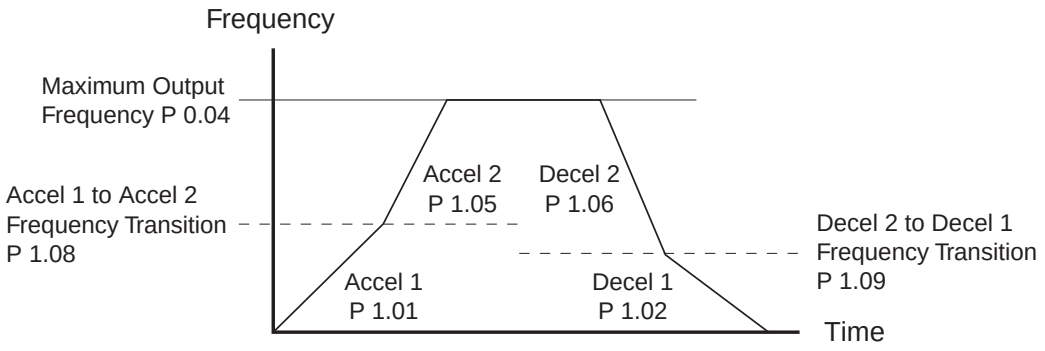

P1.09 Decel 1 to Decel 2 Frequency Transition

Range: 0.0 to 400.0 Hz

Default Setting: 0.0

P1.10 Skip Frequency 1

Range: 0.0 to 400.0 Hz Default Setting: 0.0

P1.11 Skip Frequency 2

Range: 0.0 to 400.0 Hz Default Setting: 0.0

P1.12 Skip Frequency 3

Range: 0.0 to 400.0 Hz Default Setting: 0.0

- P1.10, P1.11, and P1.12 determine the location of the frequency bands that will be skipped during AC drive operation.

P1.17 Skip Frequency Band

Range: 0.0 to 20.0 Hz Default Setting: 0.0

This parameter determines the frequency band for a given Skip Frequency (P1.10, P1.11, or P1.12). Half of the Skip Frequency Band is above the Skip Frequency and the other half is below. Programming this parameter to 0.0 disables all skip frequencies.

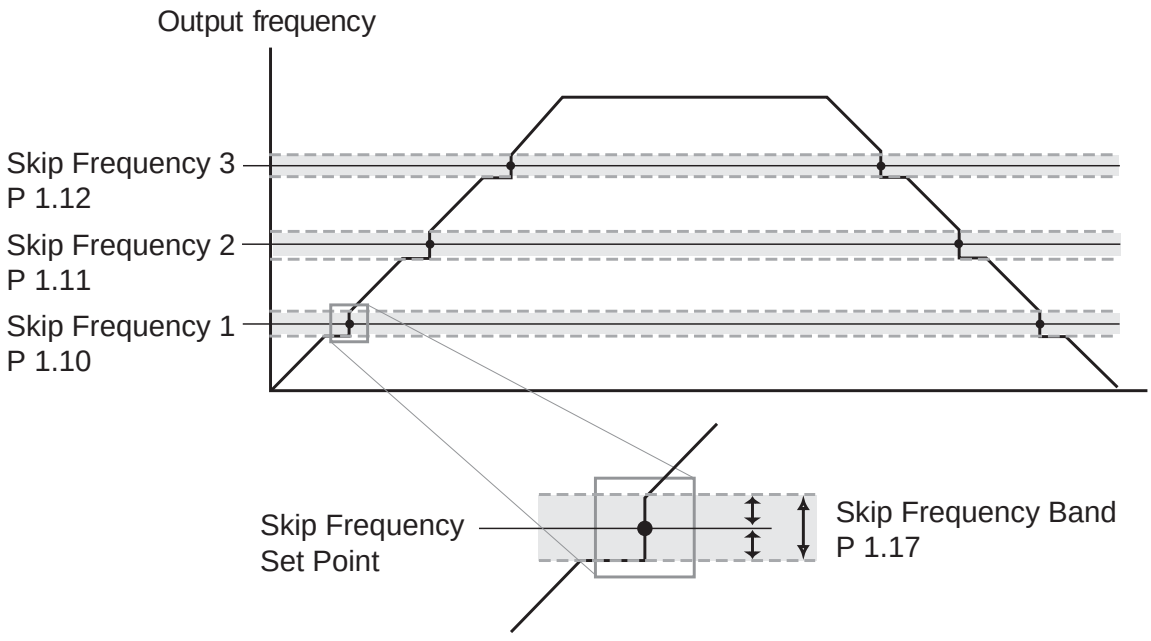

P1.18 DC Injection Current Level

Range: 00 to 100% Default Setting: 00

This parameter determines the amount of DC Braking Current applied to the motor during start-up and stopping. When setting DC Braking Current, please note that 100% is equal to the rated current of the drive. It is recommended to start with a low DC Braking Current Level and then increase until proper holding torque has been attained.

P1.20 DC Injection during Start-up

Range: 0.0 to 5.0 sec Default Setting: 0.0

This parameter determines the duration of time that the DC Braking Current will be applied to the motor during the AC drive start-up. DC Braking will be applied for the time set in this parameter until the Minimum Frequency is reached during acceleration.

P1.21 DC Injection during Stopping

Range: 0.0 to 25.0 sec Default Setting: 0.0

This parameter determines the duration of time that the DC braking voltage will be applied to the motor during stopping. If stopping with DC Braking is desired, then P1.00 must be set to Ramp to Stop (00).

P1.22 Start-point for DC Injection

Range: 0.0 to 60.0 Hz Default Setting: 0.0

This parameter determines the frequency when DC Braking will begin during deceleration.

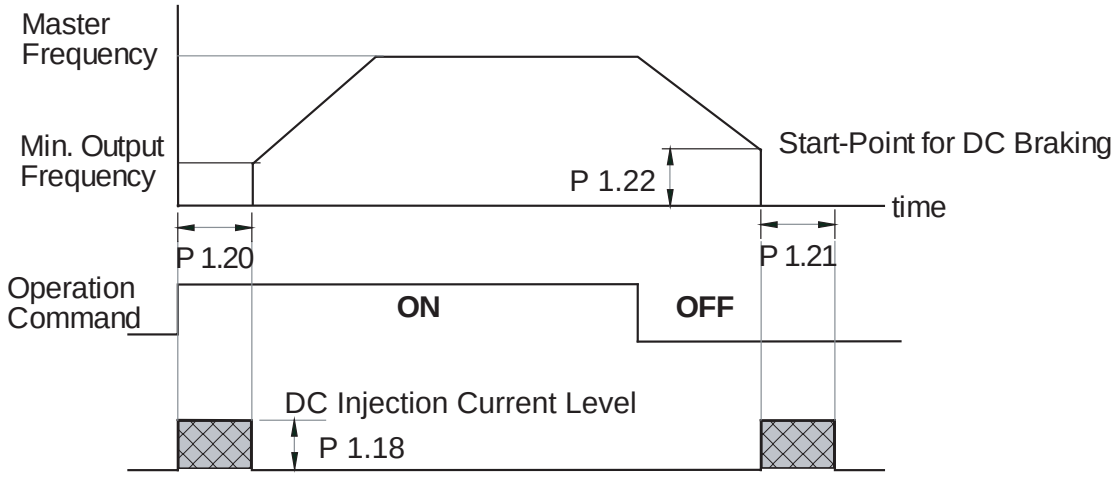

Volts/Hertz Parameters

P2.00 Volts/Hertz Settings

Settings: 00 - General Purpose (constant torque) Default Setting: 0.0
01 - High Starting Torque
02 - Fans and Pumps (variable torque)
03 - Custom

Note: P2.04 through P2.07 are only used when the Volts/Hertz parameter (P2.00) is set to 03.

00: General Purpose

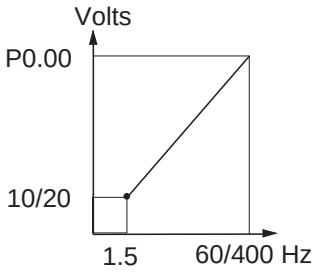

60/400Hz Base Frequency

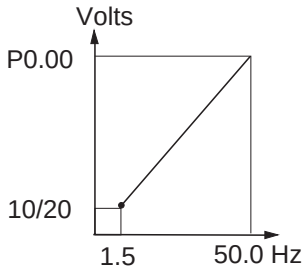

50Hz Base Frequency

03: Custom

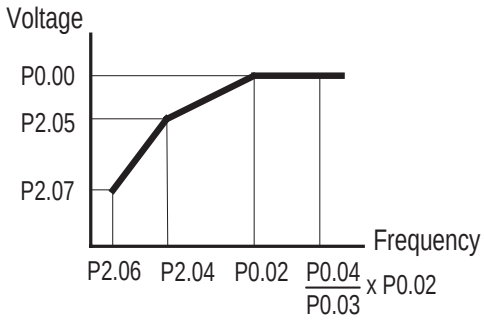

01: High Starting Torque

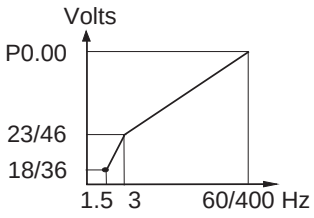

60/400Hz Base Frequency

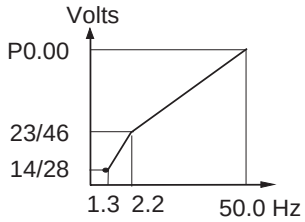

50Hz Base Frequency

02: Fans and Pumps

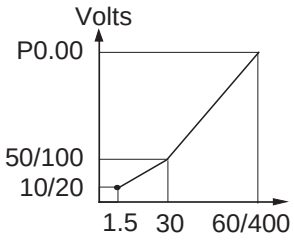

60/400Hz Base Frequency

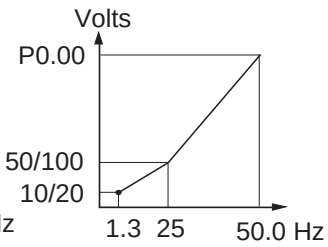

50Hz Base Frequency

P2.01 ◆ Slip Compensation

Range: 0.0 to 10.0 Default Setting: 0.0

When controlling an asynchronous induction motor, load on the AC drive will increase causing an increase in slip. This parameter may be used to compensate the nominal slip within a range of 0 to 10. When the output current of the AC drive is greater than the Motor Nameplate Amps (P0.01), the AC drive will adjust its output frequency according to this parameter.

P2.02 ◆ Auto-torque Boost

Range: 00 to 10 Default Setting: 00

This parameter functions similarly to the P2.00-01 High Starting Torque V/Hz setting, except that this parameter uses less current than does P2.00-01. P2.00-01 boosts starting torque by increasing current at every start beyond what is required to move the load. P2.02 Auto-torque Boost increases the current only as required to move the load. The proper setting for P2.02 is determined by trial and error.

P2.04 through P2.07 are used only when the Volts/Hertz parameter (P2.00) is set to 03.

P2.04 Mid-point Frequency

Range: 0.1 to 400 Hz Default Setting: 1.5

This parameter sets the Mid-Point Frequency of V/F curve. With this setting, the V/F ratio between Minimum Frequency and Mid-Point frequency can be determined.

This parameter must be greater than or equal to the Minimum Output Frequency (P2.06) and less than or equal to the Maximum Voltage Frequency (P0.02). This parameter is used only when the Volts/Hertz parameter (P2.00) is set to 03.

P2.05 Mid-point Voltage

Range: 115V/230V: 2.0 to 255V Default Setting: 10.0
460V: 2.0 to 510V 20.0
575V: 2.0 to 637V 24.0

This parameter sets the Mid-Point Voltage of any V/F curve. With this setting, the V/F ratio between Minimum Frequency and Mid-Point Frequency can be determined.

This parameter must be greater than or equal to the Minimum Output Voltage (P2.07) and less than or equal to the Maximum Output Voltage (P0.00). This parameter is used only when the Volts/Hertz parameter (P2.00) is set to 03.

P2.06 Minimum Output Frequency

Range: 0.1 to 20.0 Hz Default Setting: 1.5

This parameter sets the Minimum Output Frequency of the AC drive.
This parameter must be less than or equal to the Mid-Point Frequency (P2.04). This parameter is used only when the Volts/Hertz parameter (P2.00) is set to 03.

P2.07 Minimum Output Voltage

Range: 115V/230V: 2.0 to 50.0V Default Setting: 10.0
460V: 2.0 to 100.0V 20.0
575V: 2.0 to 130.6V 24.0

This parameter sets the Minimum Output Voltage of the AC drive.
This parameter must be equal to or less than Mid-Point Voltage (P2.05). This parameter is used only when the Volts/Hertz parameter (P2.00) is set to 03.

P2.08 PWM Carrier Frequency

Range: 115V/230V/460V: 01 to 15 kHz Default Setting: 12
575V: 01 to 10 kHz 6

This parameter sets the carrier frequency of PWM (Pulse-Width Modulated) output.

- In the table below, we see that the carrier frequency of PWM output has a significant influence on the electromagnetic noise, leakage current, heat dissipation of the AC drive and the acoustic noise to the motor:

Carrier Frequency	Acoustic Noise	Electromagnetic Noise, Leakage Current	Heat Dissipation
1kHz	significant	minimal	minimal
15 kHz	minimal	moderate	moderate

Digital Parameters

P3.00 Source of Operation Command

Default Setting: 00

Settings	00	Operation Determined by Digital Keypad
	01	Operation determined by external control terminals. Keypad STOP is enabled.
	02	Operation determined by external control terminals. Keypad STOP is disabled.
	03	Operation determined by communication interface. Keypad STOP is enabled.
	04	Operation determined by communication interface. Keypad STOP is disabled.

- This parameter sets the input source for the AC drive operation commands.
- Refer to P3.01 to P3.05 for more details.

P3.01 Multi-function Input Terminals (DI-DI2)

Default Setting: 00

Settings	00	DI1 - FWD/STOP DI2 - REV/STOP
	01	DI1 - RUN/STOP DI2 - REV/FWD
	02	DI1 - RUN (N.O. latching input) DI2 - REV/FWD DI3 - STOP (N.C. latching input)

Note: Multi-function Input Terminals DI1 and DI2 do not have separate parameter designations. DI1 and DI2 must be used in conjunction with each other to operate two and three wire control.

P3.01: Setting 00

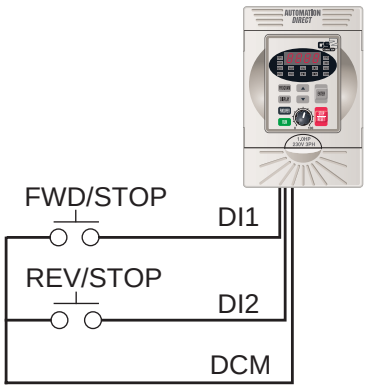

DI1	DI2	Result
OFF	OFF	STOP
ON	OFF	FWD
OFF	ON	REV
ON	ON	STOP

P3.01: Setting 01

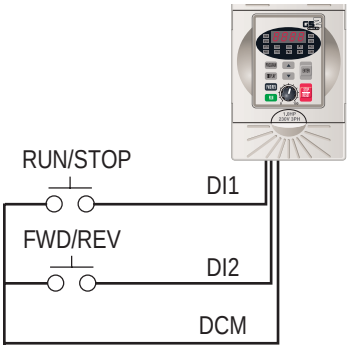

DI1- RUN/STOP select
"Open" : Stop
"Close" : Run

DI2- FWD/REV select
"Open" : FWD
"Close" : REV

P3.01: Setting 02

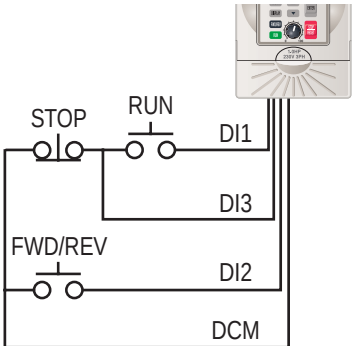

DI1- RUN command
Latching input (N.O.)
Runs when closed

DI2- FWD/REV select
"Open" : FWD
"Close" : REV

DI3- STOP command
Latching input (N.C.)
Stops when open

P3.02 Multi-Function Input (DI3)

Default Setting: 00

P3.03 Multi-Function Input (DI4)

Default Setting: 03

P3.04 Multi-function Input (DI5)

Default Setting: 04

P3.05 Multi-function Input (DI6)

Settings for P3.02 to P3.05: Default Setting: 05

00	*External Fault (N.O.)
01	*External Fault (N.C.)
02	External Reset
03	Multi-Speed/PID SP Bit 1
04	Multi-Speed/PID SP Bit 2
05	Multi-Speed/PID SP Bit 3
06	Reserved
07	Reserved
08	Reserved
09	Jog
10	External Base Block (N.O.)
11	External Base Block (N.C.)
12	Second Accel/Decel Time
13	Speed Hold
14	Increase Speed (P4.00 must be set to 01)
15	Decrease Speed (P4.00 must be set to 01)
16	Reset Speed to Zero (P4.00 must be set to 01)
17	PID Disable (N.O.)
18	PID Disable (N.C.)
99	Input Disable

* Use either 00 or 01, but not both. Use interposing relays if more contacts are needed.

Setting Explanations for parameters P3.02 - P3.05

Setting 00: External Fault (N.O.)

When an External Fault input signal is received, the AC drive output will turn off, the drive will display "EF" on the LED Display, and the motor will Coast to Stop. To resume normal operation, the external fault must be cleared, and the drive must be reset.

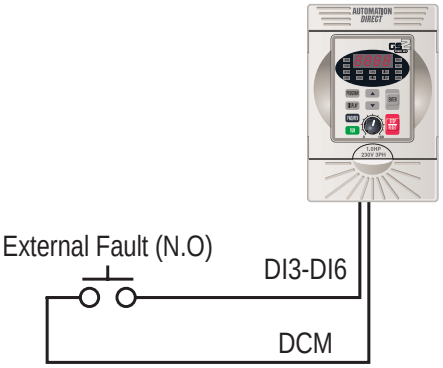

DI3-DI6: External Fault (N.O.)
"Close": Drive receives external fault input signal

Setting 01: External Fault (N.C.)

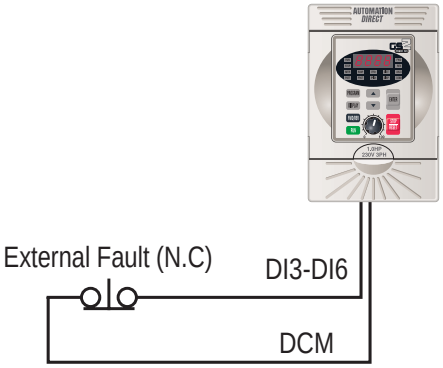

DI3-DI6: External Fault (N.C.)
"Open": Drive receives external fault input signal

Setting 02: External Reset

An External Reset has the same function as the Reset key on the digital keypad. Use an External Reset to reset the drive after a fault.

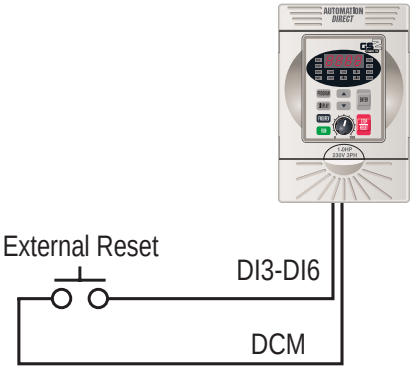

DI3-DI6: External Reset
"Close": Drive receives external reset input signal

Settings 03, 04, and 05: Multi-Speed/PID SP Bits 1, 2, and 3

If PID operation is inhibited (P7.00 = 00), the three Multi-Speed/PID SP Bits are used to select the multi-speed settings defined by P5.01 to P5.07.
If PID operation is enabled (P7.00 ≠ 00), the three Multi-Speed/PID SP Bits are used to select the PID multi-setpoint settings defined by P7.11 to P7.17.

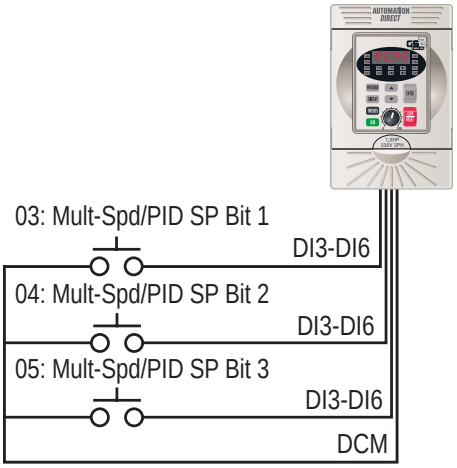

Multi-Spd/PID SP			Speed Selection	PID SP Selection
Bit 3	Bit 2	Bit 1		
OFF	OFF	OFF	P4.00	P7.02
OFF	OFF	ON	P5.01: Spd 1	P7.11: SP 1
OFF	ON	OFF	P5.02: Spd 2	P7.12: SP 2
OFF	ON	ON	P5.03: Spd 3	P7.13: SP 3
ON	OFF	OFF	P5.04: Spd 4	P7.14: SP 4
ON	OFF	ON	P5.05: Spd 5	P7.15: SP 5
ON	ON	OFF	P5.06: Spd 6	P7.16: SP 6
ON	ON	ON	P5.07: Spd 7	P7.17: SP 7

Note: In order to use the Multi-Speed settings, parameters 5.01 to 5.07 must be set. In order to use the Multi-PID SP settings, parameters 7.11 to 7.17 must be set.

Note: When all multi-speed inputs are off, the AC drive reverts back to the Source of Frequency Command (P4.00), or the PID Setpoint Source (P7.02).

Setting 09: Jog Command

This setting configures a Multi-function Input Terminal to give the Jog Command when activated. P5.00 sets the Jog Speed.

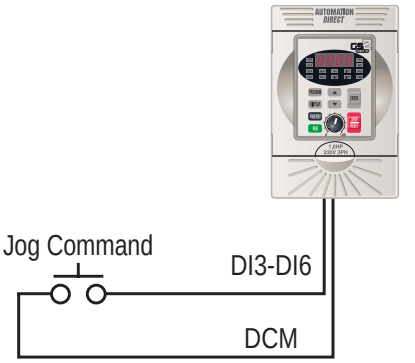

DI3-DI6: Jog Command
"Close": Drive receives Jog Command signal

Note: The motor must be stopped to initiate this command. The Jog Command cannot be used simultaneously with an active FWD/STOP, REV/STOP, or RUN/STOP command. The Jog Command can be used with an active REV/FWD command.

Settings 10 and 11: External Base Block (N.O.) and External Base Block (N.C.)

Value 10 is for a normally open (N.O) input and value 11 is for a normally closed (N.C.) input.

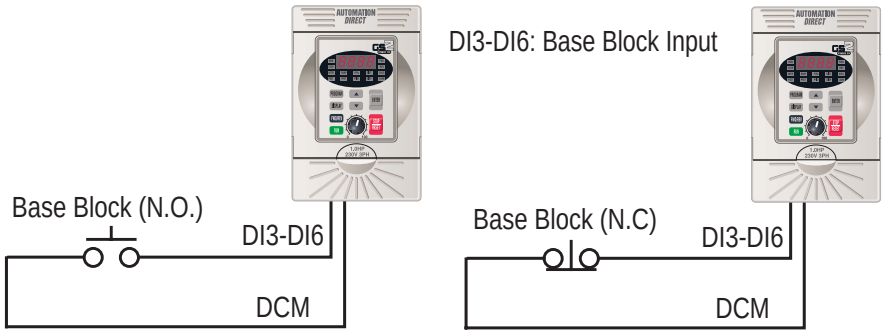

When an External Base Block is activated, the LED display shows bb, the AC drive stops all output, and the motor will free run. When the External Base Block is deactivated, the AC drive will start the speed search function and synchronize with the motor speed. The AC drive will then accelerate to the Master Frequency.

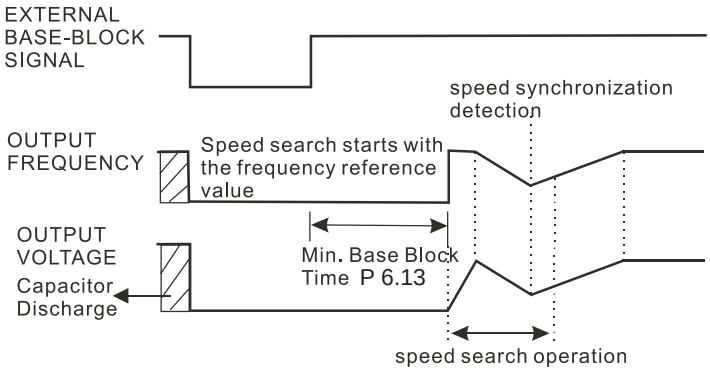

Setting 12: Second Accel/Decel Time

Multi-function Input Terminals DI3-DI6 can be set to select between Accel/Decel times 1 and 2. Parameters P1.01 and P1.02 set Accel 1 and Decel 1 times. Parameters P1.05 and P1.06 set Accel 2 and Decel 2 times.

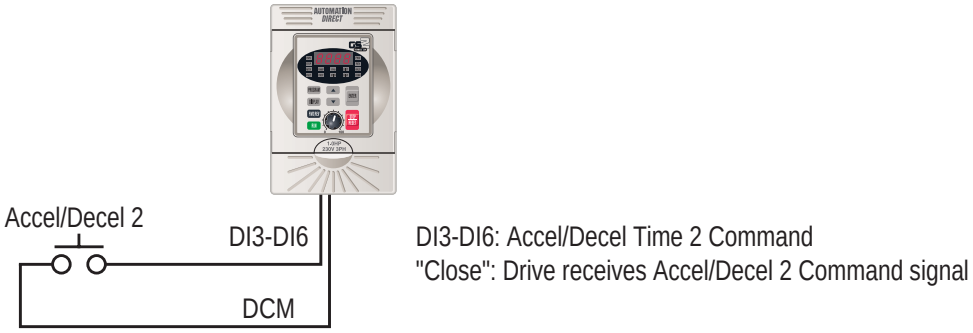

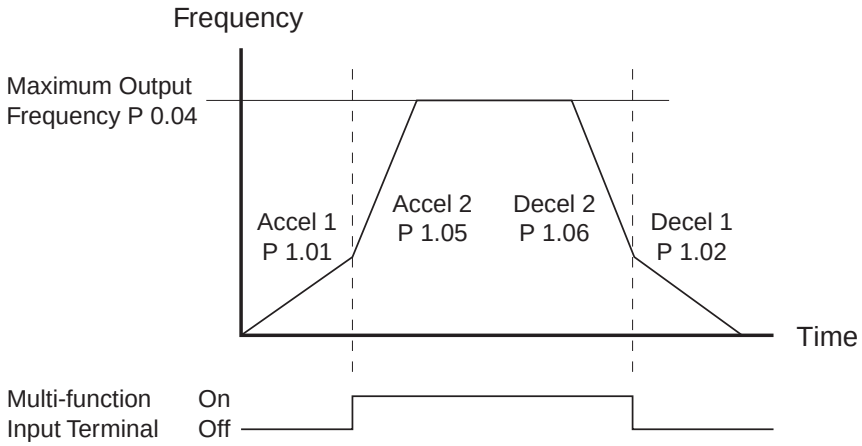

Setting 13: Speed Hold

When the Speed Hold command is received, the drive acceleration or deceleration is stopped and the drive maintains a constant speed.

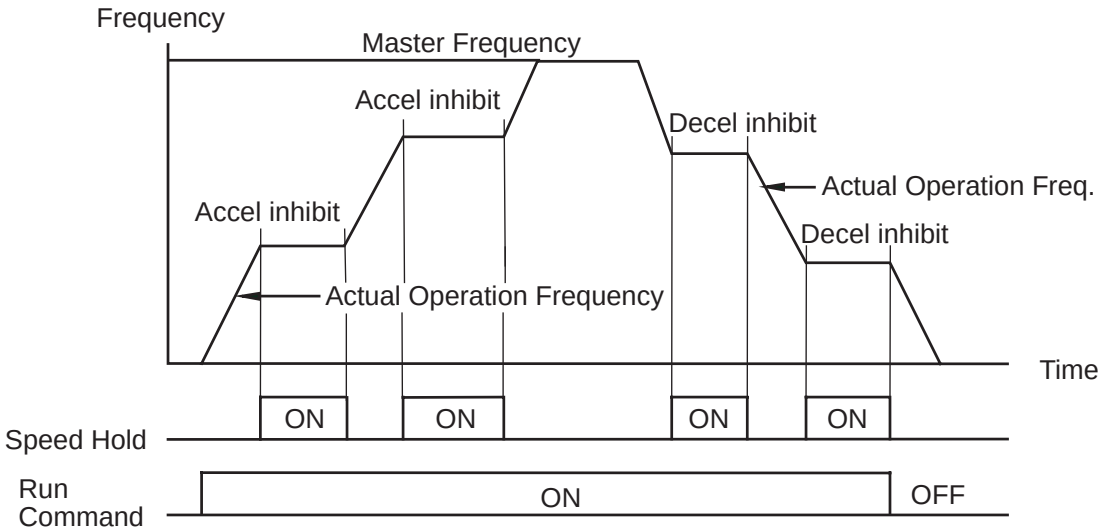

Settings 14 and 15: Increase and Decrease Speed (Electronic Motor Operated Potentiometer)

Settings 14 and 15 allow the Multi-function terminals to be used to increase or decrease speed. As long as the DI terminal is activated, the speed reference will continuously increase or decrease according to the acceleration and deceleration ramp settings.

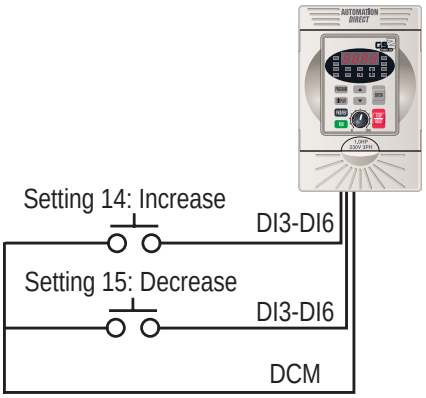

DI3-DI6: Increase or Decrease Frequency
"Close": Drive receives Increase or Decrease Frequency Input

Note: In order to use these settings, P4.00 must be set to 01.

Setting 16: Reset Speed to Zero

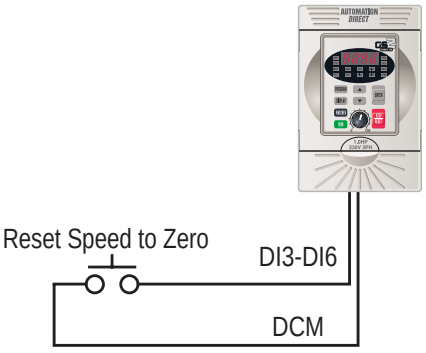

DI3-DI6: Reset Speed to Zero
"Close": Drive receives Reset Speed to Zero signal

Settings 17 and 18: PID Disable (N.O) and (N.C.)

Settings 17 and 18 set the Multi-function terminals to disable PID operation.

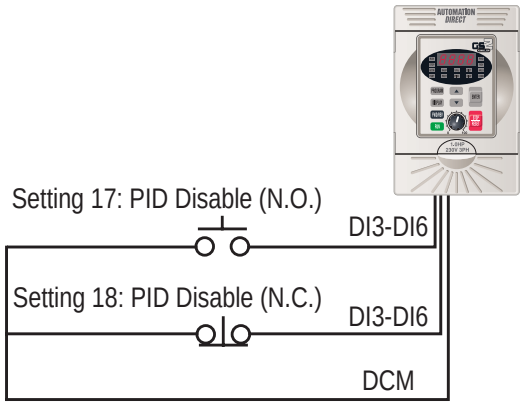

DI3-DI6: PID Disable (N.O.) or (N.C.)

Setting 99: Multi-Function Input Disable

Setting a Multi-Function Input to 99 will disable that input. The purpose of this function is to provide isolation for unused Multi-Function Input Terminals. Any unused terminals should be programmed to 99 to make sure they have no effect on drive operation.

*Note: Any **unused terminals** should be programmed to **99** to make sure they have no effect on drive operation.*

P3.11 Multi-function Output Terminal 1

Default Setting: 00

P3.12 Multi-function Output Terminal 2

Default Setting: 01

Settings for P3.11 to P3.12:

Settings:	00	AC Drive Running
	01	AC Drive Fault
	02	At Speed
	03	Zero Speed
	04	Above Desired Frequency (P3.16)
	05	Below Desired Frequency (P3.16)
	06	At Maximum Speed (P0.02)
	07	Over Torque Detected
	08	Above Desired Current (P3.17)
	09	Below Desired Current (P3.17)
	10	PID Deviation Alarm (P3.18 and P3.19)

Setting Function Explanations:

00: AC Drive Running—The terminal will be activated when there is an output from the drive.

01: AC Drive Fault—The terminal will be activated when one of the faults listed under parameters P6.31 through P6.36 occurs.

02: At Speed—The terminal will be activated when the AC drive attains the Command Frequency (P4.00 or P5.01~P5.07).

03: Zero Speed—The output will be activated when Command Frequency (P4.00 or P5.01~P5.07) is lower than the Minimum Output Frequency (P2.06).

04: Above Desired Frequency—The output will be activated when the AC drive is above the Desired Frequency (P3.16).

05: Below Desired Frequency—The output will be activated when the AC drive is below the Desired Frequency (P3.16).

06: At Maximum Speed—The output will be activated when the AC drive reaches Motor Maximum RPM (P0.04).

07: Over Torque Detected—The output will be activated when the AC drive reaches the Over-torque Detection Level (P6.08), and exceeds this level for a time greater than the Over-torque Detection Time (P6.09).

08: Above Desired Current—The output will be activated when the AC drive is above the Desired Current (P3.17).

09: Below Desired Current—The output will be activated when the AC drive is below the Desired Current (P3.17).

10: PID Deviation Alarm—The output will be activated when the AC drive exceeds the PID Deviation Level (P3.18) for longer than the PID Deviation Time (P3.19).

P3.16 ◆ Desired Frequency

Range: 0.0 to 400.0 Hz Default Setting: 0.0

- If a Multi-function output terminal is set to function as Desired Frequency Attained (P3.11 or P3.12 = 04 or 05), then the output will be activated when the programmed frequency is attained.

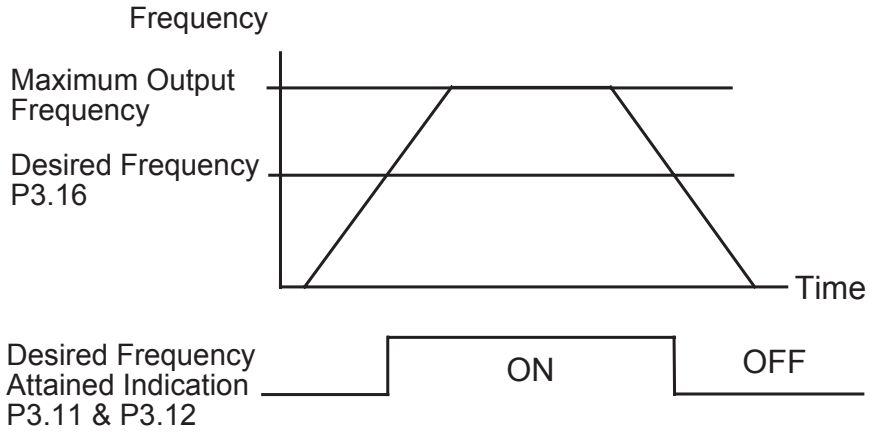

P3.17 ◆ Desired Current

Range: 0.0 to <Drive Rated Amps> Default Setting: 0.0

P3.18 ◆ PID Deviation Level

Range: 1.0 to 50.0% Default Setting: 10.0

P3.19 ◆ PID Deviation Time

Range: 0.1 to 300.0 sec Default Setting: 5.0

Analog Parameters

P4.00 Source of Frequency Command

Default: 00

Settings:

00 Frequency determined by keypad potentiometer

01 Frequency determined by digital keypad up/down

02 Frequency determined by 0 to +10V input (including remote potentiometer) on AI terminal. Switch SW1 must be set to AVI.

Switch SW1 must be set to AVI in order to use a 0 to +10V input

03 Frequency determined by 4 to 20mA input on AI terminal. Switch SW1 must be set to ACI.

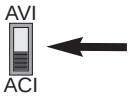

Switch SW1 must be set to ACI in order to use a 4 to 20mA input

04 Frequency determined by 0 to 20mA input on AI terminal. Switch SW1 must be set to ACI.

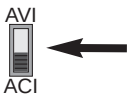

Switch SW1 must be set to ACI in order to use a 0 to 20mA input

05 Frequency determined by RS-232/RS-485 communication interface. Switches SW2 and SW3 must be set to RS-232 or RS-485.

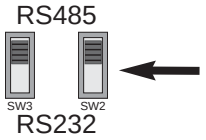

RS-232 / RS-485 communication is determined by switches SW2 & SW3

P4.01 Analog Input Offset Polarity

Range: 00 Offset disabled
01 Positive Offset
02 Negative Offset

Default Setting: 00

- This parameter sets the potentiometer Bias Frequency to be positive or negative.
- The Analog Input Offset calculation will also define the Offset Polarity. See the note after P4.02.

P4.02 ◆ Analog Input Offset

Range: 0.0 to 100% Default Setting: 0.0
This parameter can be set during the operation

- This parameter provides a frequency offset for an analog input.
- Use the equation below to determine the Analog Input Offset. For this equation, you will need to know the necessary Minimum Frequency References and and Maximum Output Frequency needed for your application.

$$\text{Analog Offset \%} = \left(\frac{\text{Min. Frequency Reference}}{\text{Max. Frequency Reference}} \right) \times 100$$

Note: The result of the Analog Input Offset calculation will also define the Analog Input Offset Polarity (P4.01). A positive answer means you should have a positive offset. A negative answer means you should have a negative offset.

P4.03 ◆ Analog Input Gain

Range: 0.0 to 300.0% Default Setting: 100.0
This parameter can be set during the operation

- This parameter sets the ratio of analog input vs frequency output.
- Use the equation below to calculate the Analog Input Gain. For this equation, you will need to know the minimum and maximum set-point frequencies needed for your application.

$$\text{Analog Gain \%} = \left(\frac{\text{Max. Frequency Reference} - \text{Min. Frequency Reference}}{\text{Maximum Output Frequency}} \right) \times 100$$

P4.04 Analog Input Reverse Motion Enable

Range: 00 Forward Motion Only Default Setting: 00
01 Reverse Motion Enable

- P4.01 to P4.04 are used when the source of frequency command is the analog signal (0 to +10 VDC, 0 to 20 mADC, or 4 to 20 mADC). Refer to the following examples:

Analog Input Examples

Use the equations below when calculating the values for the Maximum Output Frequency, Analog Input Offset, Analog Input Gain, and the Mid-point Frequency.

A) **Max. Output Frequency =** $\left(\frac{\text{Motor Max. RPM (P0-04)}}{\text{Motor Base RPM (P0-03)}}\right)$ x Base Frequency (P0-02)

Note: The Maximum Output Frequency is not a parameter setting, but is needed in order to calculate the Analog Gain. The default Maximum Output Frequency for the GS2 drive is 60Hz. If parameters P0.02, P0.03, or P0.04 are changed, then the Maximum Output Frequency will change.

B) **Analog Offset % =** $\left(\frac{\text{Min. Frequency Reference}}{\text{Max. Frequency Reference}}\right)$ x 100

C) **Analog Gain % =** $\left(\frac{\text{Max. Frequency Reference} - \text{Min. Frequency Reference}}{\text{Maximum Output Frequency}}\right)$ x 100

D) **Mid-point Freq. =** $\left(\frac{\text{Max. Freq. Reference} - \text{Min. Freq. Reference}}{2}\right)$ + Min. Freq. Reference

Note: The Mid-point Frequency calculation shows the frequency reference of the drive when the potentiometer or other analog device is at its mid-point.

Example 1: Standard Operation

This example illustrates the default operation of the drive. The example is given to further illustrate the use of the analog calculations. The full range of the analog input signal corresponds to the full forward frequency range of the AC drive.

- Minimum Frequency Reference = 0Hz
- Maximum Frequency Reference = 60Hz

Calculations

A) **Max. Output Frequency =** $\left(\frac{1750\ \text{RPM}}{1750\ \text{RPM}}\right)$ x 60Hz = (60Hz)

B) **Analog Offset % =** $\left(\frac{0\text{Hz}}{60\text{Hz}}\right)$ x 100 = (0%)

C) **Analog Gain % =** $\left(\frac{60\text{Hz} - 0\text{Hz}}{60\text{Hz}}\right)$ x 100 = (100%)

D) **Mid-point Frequency =** $\left(\frac{60\text{Hz} - 0\text{Hz}}{2}\right)$ + 0Hz = (30Hz)

Parameter Settings

P4.01: 01 – Positive Input Offset Polarity
P4.02: 00 – 0% Analog Input Offset
P4.03: 100 – 100% Analog Input Gain
P4.04: 00 – Forward Motion Only

Results

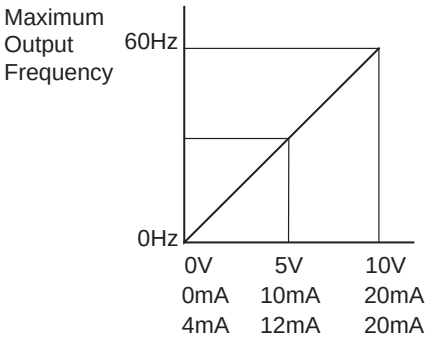

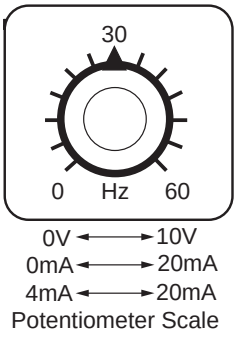

Example 2: Positive Offset

In this example, the Analog Input will have a positive offset while still using the full scale of the potentiometer. When the potentiometer is at its lowest value (0V, 0mA, or 4mA), the set-point frequency will be at 10Hz. When the potentiometer is at its maximum value (10V or 20mA), the set-point frequency will be at 60Hz.

- Minimum Frequency Reference = 10Hz
- Maximum Frequency Reference = 60Hz

Calculations

A) **Max. Output Frequency =** $\left(\frac{1750\ \text{RPM}}{1750\ \text{RPM}}\right)$ x 60Hz = (60Hz)

B) **Analog Offset % =** $\left(\frac{10\text{Hz}}{60\text{Hz}}\right)$ x 100 = (16.7%)

C) **Analog Gain % =** $\left(\frac{60\text{Hz} - 10\text{Hz}}{60\text{Hz}}\right)$ x 100 = (83.3%)

D) **Mid-point Frequency =** $\left(\frac{60\text{Hz} - 10\text{Hz}}{2}\right)$ + 10Hz = (35Hz)

Parameter Settings

P4.01: 01 – Positive Input Offset Polarity
P4.02: 16.7 – 16.7% Analog Input Offset
P4.03: 83.3 – 83.3% Analog Input Gain
P4.04: 00 – Forward Motion Only

Results

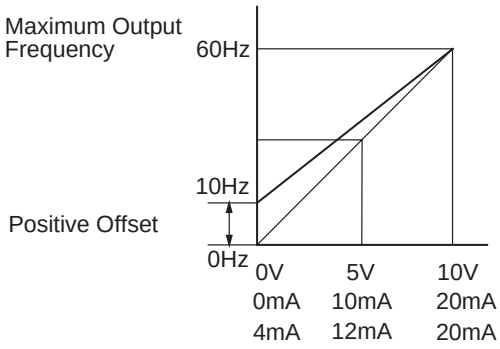

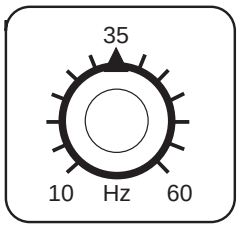

0V ⟷ 10V
0mA ⟷ 20mA
4mA ⟷ 20mA
Potentiometer Scale

Example 3: Forward and Reverse Operation

In this example, the potentiometer is programmed to run a motor full-speed in both forward and reverse direction. The frequency reference will be 0Hz when the potentiometer is positioned at mid-point of its scale. Parameter P4.04 must be set to enable reverse motion.

Note: When calculating the values for the Analog Input using reverse motion, the reverse frequency reference should be shown using a negative (-) number. Pay special attention to signs (+/-) for values representing reverse motion.

- Minimum Frequency Reference = -60Hz (reverse)
- Maximum Frequency Reference = 60Hz

Calculations

A) **Max. Output Frequency =** $\left(\frac{1750\ \text{RPM}}{1750\ \text{RPM}}\right) \times 60\text{Hz} = 60\text{Hz}$

B) **Analog Offset % =** $\left(\frac{-60\text{Hz}}{60\text{Hz}}\right) \times 100 = -100\%$

Note: The negative (-) value for the Analog Offset % shows that a negative offset is needed for P4.01.

C) **Analog Gain % =** $\left(\frac{60\text{Hz} - (-60\text{Hz})}{60\text{Hz}}\right) \times 100 = 200\%$

D) **Mid-point Frequency =** $\left(\frac{60\text{Hz} - (-60\text{Hz})}{2}\right) + (-60\text{Hz}) = 0\text{Hz}$

Parameter Settings

P4.01: 02 – Negative Input Offset Polarity
P4.02: 100 – 100% Analog Input Offset
P4.03: 200 – 200% Analog Input Gain
P4.04: 01 – Reverse Motion Enable

Results

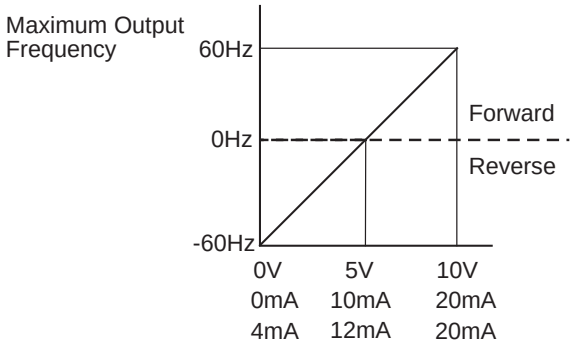

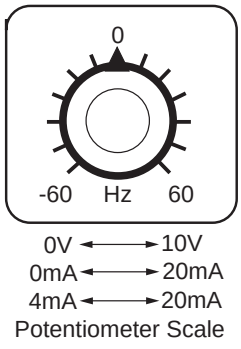

Example 4: Forward Run/Reverse Jog

This example shows an application in which the drive runs full-speed forward and jogs in reverse. The full scale of the potentiometer will be used.

Note: When calculating the values for the Analog Input using reverse motion, the reverse frequency reference should be shown using a negative (-) number. Pay special attention to signs (+/-) for values representing reverse motion.

- Minimum Frequency Reference = -15Hz (reverse)
- Maximum Frequency Reference = 60Hz

Calculations

A) **Max. Output Frequency =** $\left(\frac{1750\ \text{RPM}}{1750\ \text{RPM}}\right) \times 60\text{Hz} = 60\text{Hz}$

B) **Analog Offset % =** $\left(\frac{-15\text{Hz}}{60\text{Hz}}\right) \times 100 = -25\%$

Note: The negative (-) value for the Analog Offset % shows that a negative offset is needed for P4.01.

C) **Analog Gain % =** $\left(\frac{60\text{Hz} - (-15\text{Hz})}{60\text{Hz}}\right) \times 100 = 125\%$

D) **Mid-point Frequency =** $\left(\frac{60\text{Hz} - (-15\text{Hz})}{2}\right) + (-15\text{Hz}) = 22.5\text{Hz}$

Parameter Settings

P4.01: 02 – Negative Input Offset Polarity
P4.02: 25 – 25% Analog Input Offset
P4.03: 125 – 125% Analog Input Gain
P4.04: 01 – Reverse Motion Enable

Results

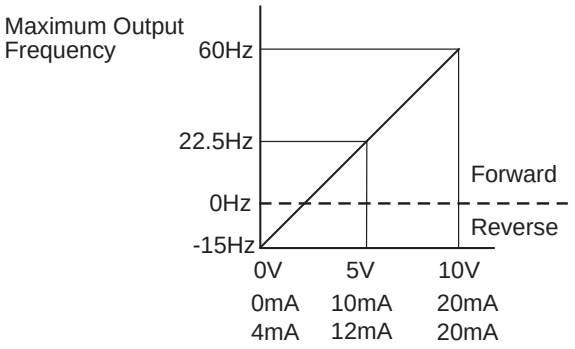

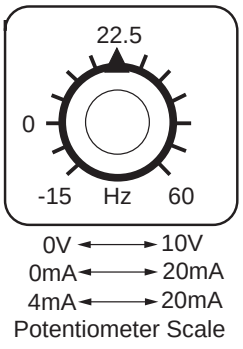

Example 5: Reduced Analog Gain and Increased Maximum Output Frequency

This example illustrates two separate features:

1) limiting the Maximum Frequency Reference by reducing the Analog Input Gain
2) increasing the Maximum Output Frequency to run the motor faster than the Motor Base RPM

When the Analog Input is at its maximum value (10V or 20mA), the set-point frequency will be 50Hz. However, the Jog and Multi-speed settings can set the output as high as 70Hz.

- Minimum Frequency Reference = 0Hz
- Maximum Frequency Reference = 50 Hz
- Motor Maximum RPM = 2042 rpm

WARNING: The Motor Maximum RPM parameter (P0.04) should never exceed the maximum speed rating for the motor you are using. If this information is not readily available, consult your motor manufacturer.

Calculations

A) **Max. Output Frequency =** $\left(\frac{2042\ \text{RPM}}{1750\ \text{RPM}}\right)$ x 60Hz = (70Hz)

B) **Analog Offset % =** $\left(\frac{0\text{Hz}}{50\text{Hz}}\right)$ x 100 = (0%)

C) **Analog Gain % =** $\left(\frac{50\text{Hz} - (0\text{Hz})}{70\text{Hz}}\right)$ x 100 = (71.4%)

D) **Mid-point Frequency =** $\left(\frac{50\text{Hz} - (0\text{Hz})}{2}\right)$ + (0Hz) = (25Hz)

Parameter Settings

P0.04: 2042 – Motor Maximum RPM
P4.01: 00 – Offset disabled
P4.02: 00 – 0% Analog Input Offset
P4.03: 71.4 – 71.4% Analog Input Gain
P4.04: 00 – Forward Motion Only

Results

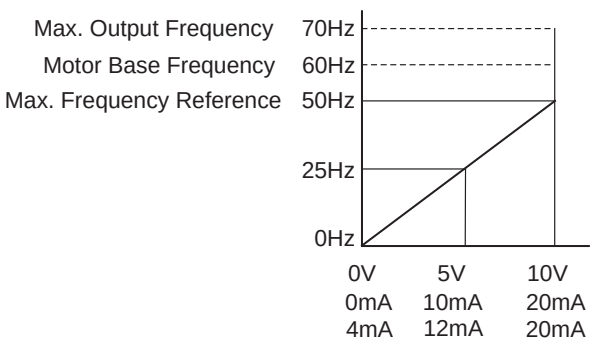

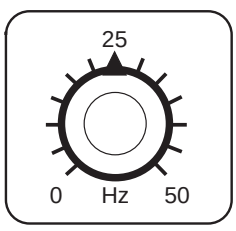

P4.05 Loss of ACI Signal (4-20mA)

Settings: 00 - Decelerate to 0Hz
01 - Stop immediately and display "EF".
02 - Continue operation by the last frequency command

Default Setting: 00

This parameter determines the operation of the drive when the ACI frequency command is lost.

P4.11 ◆ Analog Output Signal

Range: 00 - Frequency Hz
01 - Current A
02 - PV

Default Setting: 00

This parameter selects either Output Frequency or current to be displayed using the 0 to 10V A0 output.

P4.12 ◆ Analog Output Gain

Range: 00 to 200%

Default Setting: 100

This parameter sets the voltage range of the analog output signal, on output terminal A0.

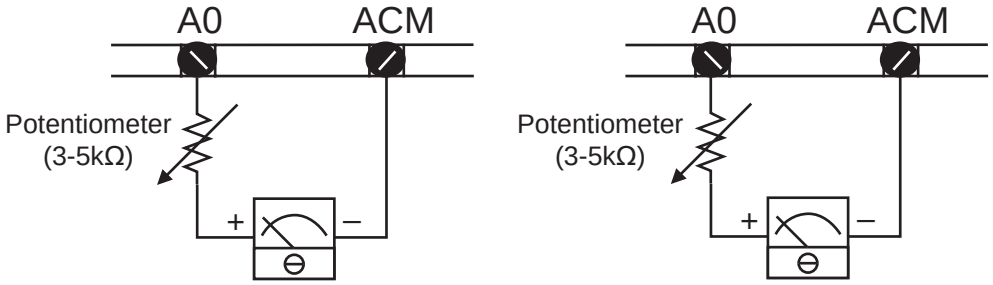

Analog Frequency Meter Analog Current Meter

- The analog output voltage is directly proportional to the output frequency of the AC drive. With the factory setting of 100%, the Maximum Output Frequency of the AC drive corresponds to +10VDC analog voltage output. (The actual voltage is about +10VDC, and can be adjusted by P4.12)
- The analog output voltage is directly proportional to the output current of the AC drive. With the factory setting of 100%, the 2.5 times rated current of the AC drive corresponds to +10 VDC analog voltage output. (The actual voltage is about +10 VDC, and can be adjusted by P4.12).

Note: Any type of voltmeter can be used. If the meter reads full scale at a voltage less than 10 volts, then P4.12 should be set by the following formula:

P4.12 = (meter full scale voltage ÷ 10)×100%

For Example: When using the meter with full scale of 5 Volts, adjust P4.12 to 50%.

Preset Parameters

P5.00 ◆ Jog

Range: 0.0 to 400.0 Hz Default Setting: 6.0

The Jog Command is selected by a Multi-Function Input Terminal (P3.02 to P3.05) set to the Jog Function (09).

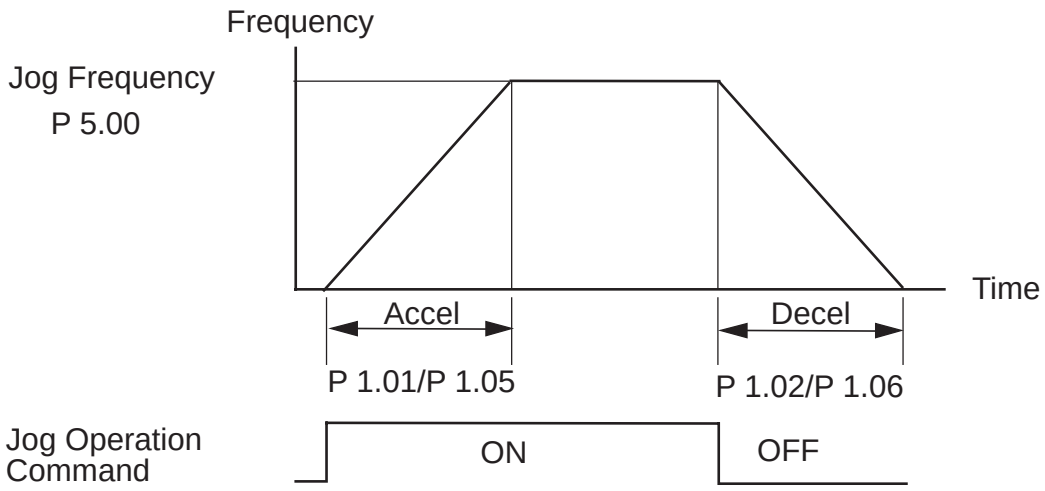

P5.01 ◆ Multi-Speed 1

P5.02 ◆ Multi-Speed 2

P5.03 ◆ Multi-Speed 3

P5.04 ◆ Multi-Speed 4

P5.05 ◆ Multi-Speed 5

P5.06 ◆ Multi-Speed 6

P5.07 ◆ Multi-Speed 7

Range for P5.01 - P5.07: 0.0 to 400.0 Hz Default Setting: 0.0

- The Multi-Function Input Terminals (refer to P3.01 to P3.05) are used to select one of the AC drive Multi-Step speeds. The speeds (frequencies) are determined by P5.01 to P5.07 shown above.

Multi-Speed Bits			Speed Selection
Bit 3	Bit 2	Bit 1	
OFF	OFF	OFF	P4.00: Source of Frequency
OFF	OFF	ON	P5.01: Multi-Speed 1
OFF	ON	OFF	P5.02: Multi-Speed 2
OFF	ON	ON	P5.03: Multi-Speed 3
ON	OFF	OFF	P5.04: Multi-Speed 4
ON	OFF	ON	P5.05: Multi-Speed 5
ON	ON	OFF	P5.06: Multi-Speed 6
ON	ON	ON	P5.07: Multi-Speed 7

Note: When all multi-speed inputs are off, the AC drive reverts back to the Command Frequency (P4.00).

Protection Parameters

P6.00 Electronic Thermal Overload Relay

Default Setting: 00

Settings:

00 Constant Torque (inverter/vector duty motors)

Use this setting when using the drives with motors designed specifically for AC drive outputs and for running at low speeds with high currents. Motor currents will be 100% throughout the speed range, and can be up to 150% for one minute.

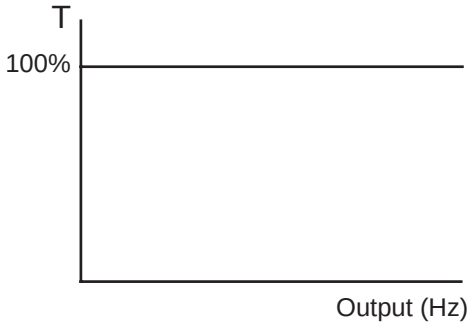

01 Variable Torque (fan cooled standard motors)

Use this setting when using the drives with motors which are NOT designed specifically for AC drive outputs. Motors with shaft mounted fans offer poor cooling at low speeds, therefore the output can be derated at lower output frequencies. This derated current is for protecting the motor at lower speeds.

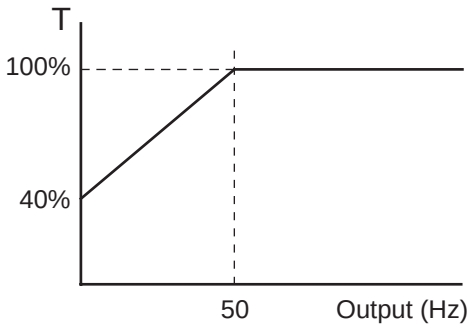

The output current is derated as follows:

- I_{output} (%) = [f_{output} (Hz) x 1.2 %/Hz] + 40%

Example:
If the rated motor current is 10A, and the output frequency is 25Hz, the derating will be 70%, and the overload will be 10.5A (150%) for one minute.

- I_{output} (%) = [(25Hz) (1.2 %/Hz)] + 40% = 70%
- 10A x 70% = 7A
- 7A x 150% = 10.5A

02 Inactive

P6.01 Auto Restart After Fault

Range: 00 to 10 Default Setting: 00

- After fault occurs (allowable faults: over-current OC, over-voltage OV), the AC drive can be reset/restarted automatically up to 10 times. Setting this parameter to 0 will disable the reset/restart operation after any fault has occurred. When enabled, the AC drive will restart with speed search, which starts at the previous Frequency. To set the fault recovery time after a fault, please see (P6.13) base-block time for speed search.

P6.02 Momentary Power Loss

Default Setting: 00

Settings:	00	Stop operation after momentary power loss.
	01	Continue operation after momentary power loss, speed search from Speed Reference.
	02	Continue operation after momentary power loss, speed search from Minimum Speed.

Note: Also refer to P6.30, Line Start Lockout.
Note: This parameter (P6.02) will work only if the Source of Operation (P3.00) is set to something other than 00 (Operation determined by digital keypad).

P6.03 Reverse Operation Inhibit

Default Setting: 00

Settings:	00	Enable Reverse Operation
	01	Disable Reverse Operation

This parameter determines whether the AC Motor Drive can operate in the reverse direction.

P6.04 Auto Voltage Regulation

Default Setting: 00

Settings:
- 00 AVR enabled
- 01 AVR disabled
- 02 AVR disabled during decel
- 03 AVR disabled during Stop

- AVR function automatically regulates the AC drive output voltage to the Maximum Output Voltage (P0.00). For instance, if P0.00 is set at 200 VAC and the input voltage is at 200V to 264 VAC, then the Maximum Output Voltage will automatically be regulated to 200 VAC.
- Without AVR function, the Maximum Output Voltage may vary between 180V to 264 VAC, due to the input voltage varying between 180V to 264 VAC.
- Selecting program value 2 enables the AVR function and also disables the AVR function during deceleration. This offers a quicker deceleration.

P6.05 Over-Voltage Stall Prevention

Range: 00 Enable Over-voltage Stall Prevention
01 Disable Over-voltage Stall Prevention

Default Setting: 00

- During deceleration, the AC drive DC bus voltage may exceed its Maximum Allowable Value due to motor regeneration. When this function is enabled, the AC drive will stop decelerating, and maintain a constant output frequency. The drive will resume deceleration when the voltage drops below the factory-preset value.

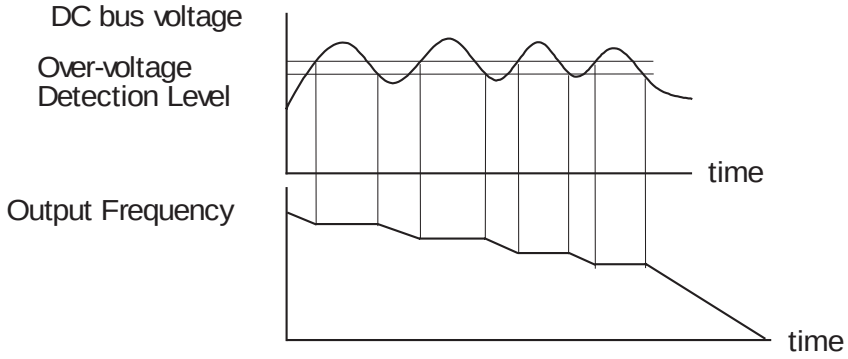

Note: With moderate inertial loads, over-voltage during deceleration will not occur. For applications with high inertia loads, the AC drive will automatically extend the deceleration time. If deceleration time is critical for the application, a dynamic braking resistor should be used. Set this parameter to 01 (disable) when using a dynamic braking resistor.

P6.06 Auto Adjustable Accel/Decel

Default Setting: 00

Settings:		
	00	Linear Accel/Decel
	01	Auto Accel, Linear Decel
	02	Linear Accel, Auto Decel
	03	Auto Accel/Decel
	04	Auto Accel/Decel Stall Prevention

If the auto accel/decel is selected, the AC drive will accel/decel in the fastest and smoothest means possible by automatically adjusting the time of accel/decel.

This parameter provides five modes to choose:

- 00 Linear Acceleration and deceleration (operation by P1.01, P1.02 or P1.05, P1.06 acceleration/deceleration time).
- 01 Automatic acceleration, linear deceleration (Operation by automatic acceleration time, P1.02 or P1.06 deceleration time).
- 02 Linear acceleration and automatic deceleration (Operation by automatic acceleration time, P1.01 or P1.05 acceleration time).
- 03 Automatic acceleration, deceleration (Operation by AC drive auto adjustable control).
- 04 Auto acceleration, deceleration. The auto accel/decel will not be quicker than the settings for acceleration (P1.01 or P1.05) or deceleration (P1.02 or P1.06). The operation is specific to preventing a stall.

P6.07 Over-Torque Detection Mode

Default Setting: 00

Settings:		
	00	Disabled
	01	Enabled during constant speed operation
	02	Enabled during acceleration

P6.08 Over-Torque Detection Level

Range: 30 to 200% Default Setting: 150

- A setting of 100% is proportional to the Rated Output Current of the drive.
- This parameter sets the Over-Torque Detection level in 1% increments. (The AC drive rated current is equal to 100%.)

P6.09 Over-Torque Detection Time

Range: 0.1 to 10.0 Default Setting: 0.1

This parameter sets the Over-Torque Detection Time in units of 0.1 seconds.

P6.10 Over-Current Stall Prevention During Acceleration

Range: 20 to 200% Default Setting: 150

A setting of 100% is equal to the Rated Output Current of the drive.

- Under certain conditions, the AC drive output current may increase abruptly, and exceed the value specified by P6.10 This is commonly caused by rapid acceleration or excessive load on the motor. When this function is enabled, the AC drive will stop accelerating and maintain a constant output frequency. The AC drive will only resume acceleration when the current drops below the maximum value.

P6.11 Over-Current Stall Prevention During Operation

Range: 20 to 200% Default Setting: 150

- During steady-state operation with motor load rapidly increasing, the AC drive output current may exceed the limit specified in P6.11. When this occurs, the output frequency will decrease to maintain a constant motor speed. The drive will accelerate to the steady-state output frequency only when the output current drops below the level specified by P6.11.

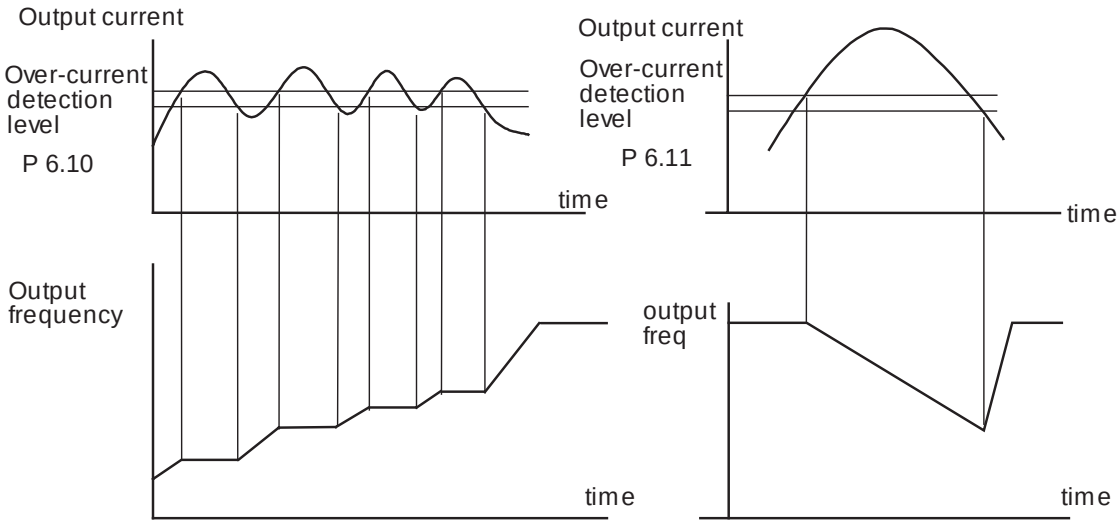

Over-current Stall Prevention during Acceleration

Over-current Stall Prevention during Operation

P6.12 Maximum Allowable Power Loss Time

Range: 0.3 to 5.0 sec Default Setting: 2.0

- During a power loss, if the power loss time is less than the time defined by this parameter, the AC drive will resume operation. If the Maximum Allowable Power Loss Time is exceeded, the AC drive output is turned off.

P6.13 Base-Block Time for Speed Search

Range: 0.3 to 5.0 sec Default Setting: 0.5

- When a momentary power loss is detected, the AC drive turns off for a specified time interval determined by P6.13 before resuming operation. This time interval is called Base-Block. This parameter should be set to a value where the residual output voltage due to regeneration is nearly zero, before the drive resumes operation.
- This parameter also determines the searching time when performing external Base-Block and Fault Reset (P6.01)

P6.14 Maximum Speed Search Current Level

Range: 30 to 200% Default Setting: 150

- Following a power failure, the AC drive will start its speed search operation only if the output current is greater than the value determined by P6.14. When the output current is less than that of P6.14, the AC drive output frequency is at a "speed synchronization point". The drive will start to accelerate or decelerate back to the operating frequency at which it was running prior to the power failure.

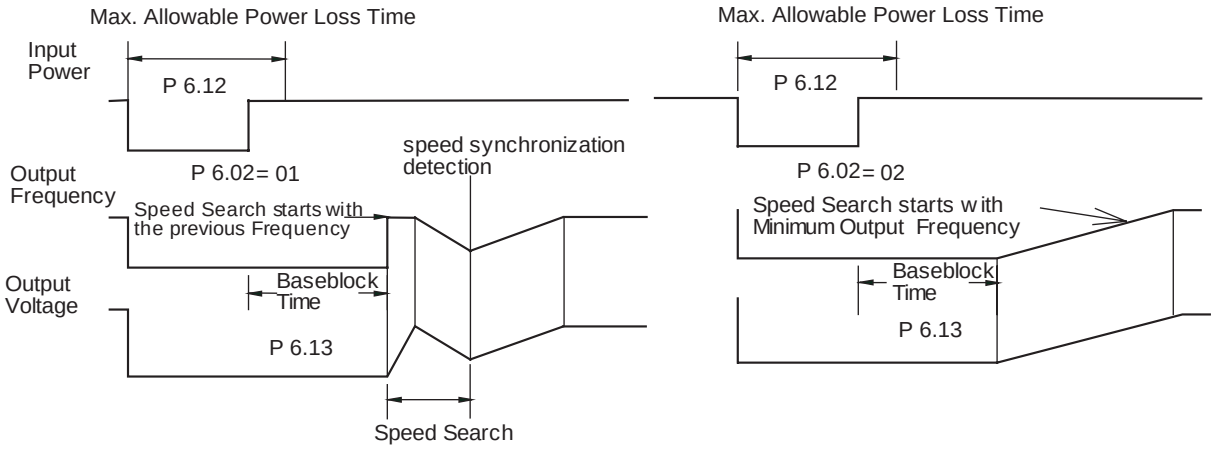

P6.15 Upper Bound of Output Frequency

Range: 0.1 to 400 Hz Default Setting: 400

- The Upper/Lower Bound of Output Frequency is to prevent operation error and machine damage.
- This parameter must be equal to or greater than the Lower Bound of Output Frequency (P6.16).
- If the Upper Bound of Output Frequency is 50 Hz and the Maximum Output Frequency is 60 Hz, then any Command Frequency above 50 Hz will generate a 50 Hz output from the drive.
- The Output Frequency is also limited by the Motor Maximum RPM (P0.04).

P6.16 Lower Bound of Output Frequency

Range: 0.0 to 400 Hz Default Setting: 0.0

- The Upper/Lower Bound of Output Frequency is to prevent operation error and machine damage.
- This parameter must be equal to or less than the Upper Bound of Output Frequency (P6.15).
- If the Lower Bound of Output Frequency is 10 Hz, and the Minimum Output Frequency (P2.06) is set at 1.0 Hz, then any Command Frequency between 1-10 Hz will generate a 10 Hz output from the drive.
- The Upper/Lower Bound of Output Frequency is to prevent operation error and machine damage.

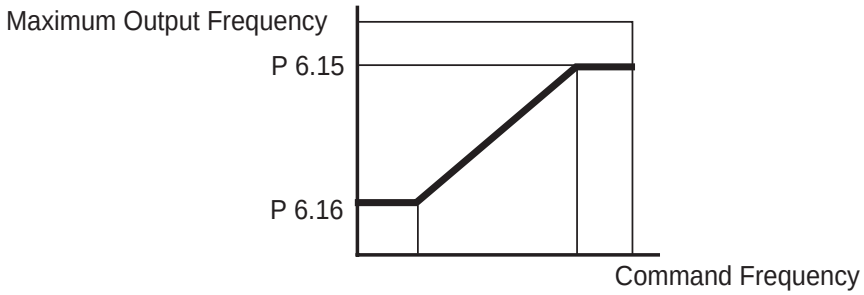

P6.30 Line Start Lockout

Default Setting: 00

Settings:	00	Enable Line Start Lockout
	01	Disable Line Start Lockout

When this parameter is enabled, the AC Motor Drive will not start when powered up with a RUN command already applied. The drive must see the RUN command change from STOP to RUN before it will start.

When this parameter is disabled, the AC Motor Drive will start when powered up with a RUN command already applied.

P6.31 **Present Fault Record**

P6.32 **Second Most Recent Fault Record**

P6.33 **Third Most Recent Fault Record**

P6.34 **Fourth Most Recent Fault Record**

P6.35 **Fifth Most Recent Fault Record**

P6.36 **Sixth Most Recent Fault Record**

Default Setting: 00

Settings for P6.31 - P6.36:

00	No Fault occurred
01	Over-current (oc)
02	Over-voltage (ov)
03	Overheat (oH)
04	Overload (oL)
05	Overload 1 (oL1)
06	Overload 2 (oL2)
07	External Fault (EF)
08	CPU failure 1 (CF1)
09	CPU failure 2 (CF2)
10	CPU failure 3 (CF3)
11	Hardware Protection Failure (HPF)
12	Over-current during accel (OCA)
13	Over-current during decel (OCd)
14	Over-current during steady state (OCn)
15	Ground fault or fuse failure (GFF)
16	Reserved
17	Input Power 3 phase loss
18	External Base Block (bb)
19	Auto Adjust Accel/decel failure (cFA)
20	Software protection code (co)

PID Parameters

P7.00 Input Terminal for PID Feedback

Default Setting: 00

Settings:
- 00 Inhibit PID operation.
- 01 Forward-acting (heating loop) PID feedback, PV from AVI (0 to +10V)
- 02 Forward-acting (heating loop) PID feedback, PV from ACI (4 to 20mA)
- 03 Reverse-acting (cooling loop) PID feedback, PV from AVI (0 to +10V)
- 04 Reverse-acting (cooling loop) PID feedback, PV from ACI (4 to 20mA)

Forward-acting Loop

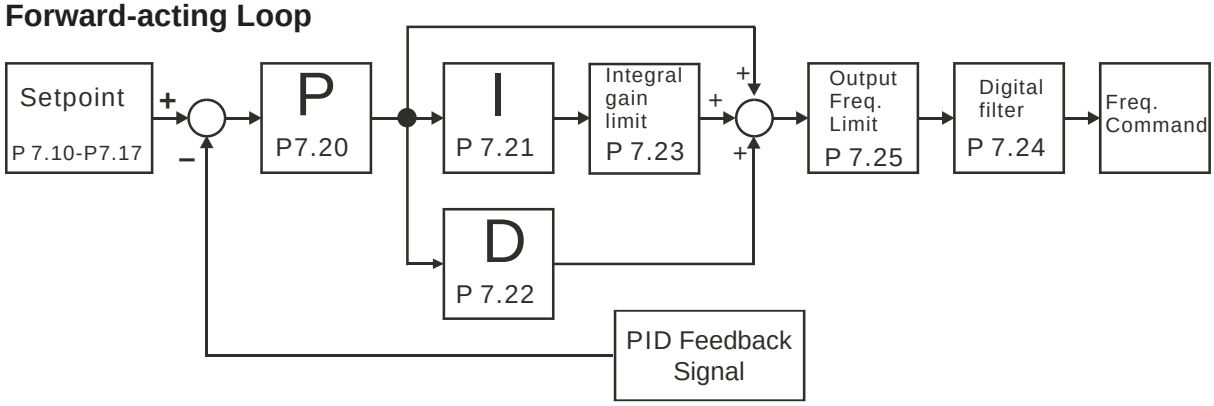

Reverse-acting Loop

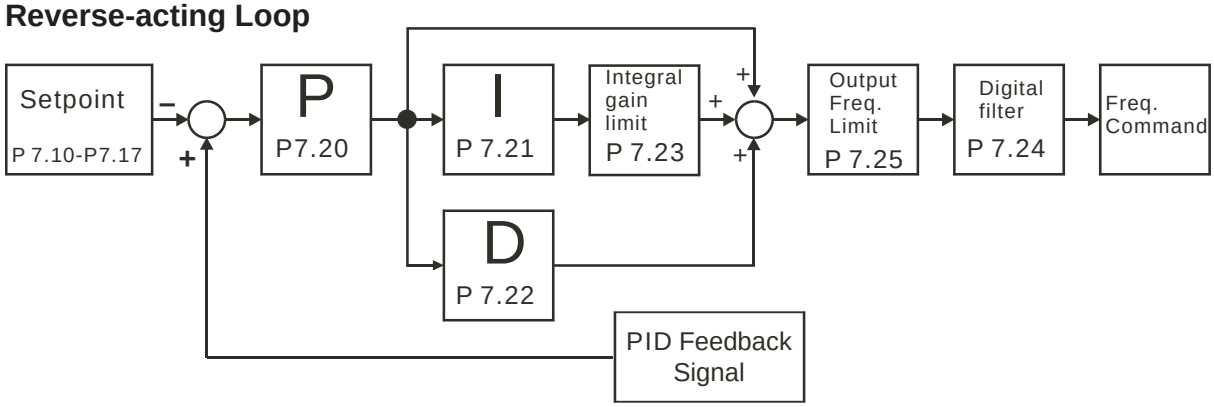

Note: Reverse-acting PID loops are available only for GS2 AC drives with firmware version 1.04 or higher.

Note: When using PID operation, the Source of Frequency parameter (P4.00) must be set to 00 or 01. If PID operation is disabled, the AC drive will operate using the Source of Frequency specified by P4.00.

P7.01 PV 100% Value

Range: 0.0 to 999 Default Setting: 100.0

This parameter should be set to the value corresponding to the 100% value of the process variable (PV). The setting for P7.01 cannot be less than any setting for P7.10 to P7.17.

Note: The setting for PV 100% value (P7.01) cannot be set less than any value set for P7.10 to P7.17. If you are unable to reduce P7.01 to the desired value, check parameters P7.10 to P7.17 and reduce these values accordingly.

P7.02 PID Setpoint Source

Settings: 00 - Keypad Default Setting: 00
01 - Serial Communications

P7.10 ◆ Keypad PID Setpoint

Range: 0.0 to 999 Default Setting: 0.0

Note: The settings for P7.10 to P7.17 cannot exceed the setting for P7.01.

P7.11 ◆ PID Multi-setpoint 1

Range: 0.0 to 999 Default Setting: 0.0

- The Multi-Function Input Terminals DI3 to DI6 are used to select one of the PID Multi-Setpoints. (For further explanation, refer to settings 03, 04, and 05 for P3.02 to P3.05.) The setpoints are determined by P7.11 to P7.17.

P7.12 ◆ PID Multi-setpoint 2

Range: 0.0 to 999 Default Setting: 0.0

- Refer to P7.11 for explanation.

P7.13 ◆ PID Multi-setpoint 3

Range: 0.0 to 999 Default Setting: 0.0

- Refer to P7.11 for explanation.

P7.14 ◆ PID Multi-setpoint 4

Range: 0.0 to 999 Default Setting: 0.0

- Refer to P7.11 for explanation.

P7.15 ◆ PID Multi-setpoint 5

Range: 0.0 to 999 Default Setting: 0.0

- Refer to P7.11 for explanation.

P7.16 ◆ PID Multi-setpoint 6

Range: 0.0 to 999 Default Setting: 0.0

•Refer to P7.11 for explanation.

P7.17 ◆ PID Multi-setpoint 7

Range: 0.0 to 999 Default Setting: 0.0

•Refer to P7.11 for explanation.

P7.20 ◆ Proportional Control (P)

Range: 0.0 to 10.0 Default Setting: 1.0

The first parameter of PID control is Proportional Control (P). For a given process, if the Proportional Value is set too low, the control action will be too sluggish. If the Proportional value is set too high, the control action will be unstable (erratic).

Set the Integral Control (I) and Derivative Control (D) to zero (0). Begin tuning the process with a low Proportional Value, and increase the Proportional value until the system goes unstable (erratic). When instability is reached, reduce the Proportional Value slightly until the system becomes stable (smaller values reduce system Gain). Stability can be tested by moving between two wide-spread setpoint values.

With 10% deviation and P=1, then P X 10% = Control Output. For example, if the speed of a motor is dragged down 10% due to a load increase, a corrective speed signal increase of 10% is generated. In a perfect world, this increase in speed command should bring the motor speed back to normal.

P7.21 ◆ Integral Control (I)

Range: 0.00 to 100.0 sec (0.00 disable) Default Setting: 1.00

Using only the Proportional Control, the corrective action may not increase fast enough or the setpoint may never be reached because of system losses. The Integral Control is used to generate additional corrective action.

When tuning, begin with a large Integral value and reduce the value until the system goes unstable (erratic). When instability is reached, increase the Integral value slightly until the system becomes stable and the desired setpoint value is reached.

P7.22 ◆ Derivative Control (D)

Range: 0.00 to 1.00 sec Default Setting: 0.00

If the control output is too sluggish after the Proportional Control (P) and Integral Control (I) values are set, Derivative Control (D) may be required. Begin with a high Derivative value and reduce the value to the point of system instability. Then increase the Derivative value until the control output regains stability. Stability can be tested by moving between two wide-spread setpoint values.

P7.23 Upper Bound for Integral Control

Range: 00 to 100% Default Setting: 100

- This parameter defines an upper boundary or limit for the integral gain (I) and therefore limits the Master Frequency. Use the formula below to calculate the Integral upper limit.

$$\text{Max. Output Frequency} = \left(\frac{\text{Motor Max. RPM (P0-04)}}{\text{Motor Base RPM (P0-03)}}\right) \text{x Base Frequency (P0-02)}$$

- The formula is: Integral upper limit = (Maximum Output Frequency) X P7.23. This parameter can limit the Maximum Output Frequency

P7.24 Derivative Filter Time Constant

Range: 0.0 to 2.5 sec Default Setting: 0.0

- To avoid amplification of measured noise in the controller output, a derivative digital filter is inserted. This filter helps smooth oscillations. Larger values for P7.24 provide more smoothing.

P7.25 PID Output Frequency Limit

Range: 00 to 110% Default Setting: 100

- This parameter defines the percentage of output frequency limit during the PID control. The formula is Output Frequency Limit = (Maximum Output Frequency) X P7.25. This parameter will limit the Maximum Output Frequency.

$$\text{Max. Output Frequency} = \left(\frac{\text{Motor Max. RPM (P0-04)}}{\text{Motor Base RPM (P0-03)}}\right) \text{x Base Frequency (P0-02)}$$

P7.26 Feedback Signal Loss Detection Time

Range: 0.0 to 3600 sec Default Setting: 60

- This parameter defines how long the PID Feedback signal is lost before an error is generated. Setting this parameter to 0.0 disables the PID Feedback loss timer. When the feedback signal is lost, PID Feedback loss timer starts timing. When the timer value is greater than the setting value of P. 7.26, the PID Feedback Loss parameter (P7.27) is activated. Furthermore, the Keypad will display "FbE" means the feedback abnormality detected. When the signal is corrected, the warning message "FbE" will automatically be cleared.

P7.27 PID Feedback Loss Operation

Range: 00 - Warn and AC Drive Stop Default Setting: 00
01 - Warn and Continue Operation

- This parameter sets the operation of the drive when there is a loss of the PID feedback signal.
- This parameter only functions with 4-20ma for feedback loss operation.

Display Parameters

P8.00 ◆ User Defined Display Function

Default Setting: 00

Settings:		
	00	Output Frequency (Hz)
	01	Motor Speed (RPM)
	02	Output Frequency x P8.01
	03	Output Current (A)
	04	Motor Output Current (%)
	05	Output Voltage(V)
	06	DC Bus Voltage (V)
	07	PID Setpoint
	08	PID Feedback (PV)
	09	Frequency Setpoint

P8.01 ◆ Frequency Scale Factor

Range: 0.01 to 160.0 Default Setting: 1.0

This parameter can be used to multiply the display unit by a scaling factor so that the display will represent some other user desired unit. For example, the user may want to scale the drive display to represent ft/min for a motor that is driving a conveyor.

The coefficient K determines the multiplying factor for the user-defined unit.

- The display value is calculated as follows:

Display value = output frequency x K

- The display window is only capable of showing four digits, but P8.01 can be used to create larger numbers. The display window uses decimal points to signify numbers up to five digits as explained below:

DISPLAY	*NUMBER REPRESENTED*
9999	The absence of a decimal point indicates a four digit integer.
999.9	A single decimal point between the middle and the right-most numbers is a true decimal point; it separates ones and tenths as in “300.5 (three hundred and one-half).
9999.	A single decimal point after the right-most number is not a true decimal point; instead it indicates that a zero follows the right-most numbers. For example, the number 12340 would be displayed as “1234.”.

Communication Parameters

P9.00 Communication Address

Range: 01 to 254 Default Setting: 01

- If the AC drive is controlled by serial communication, the communication address must be set via this parameter.

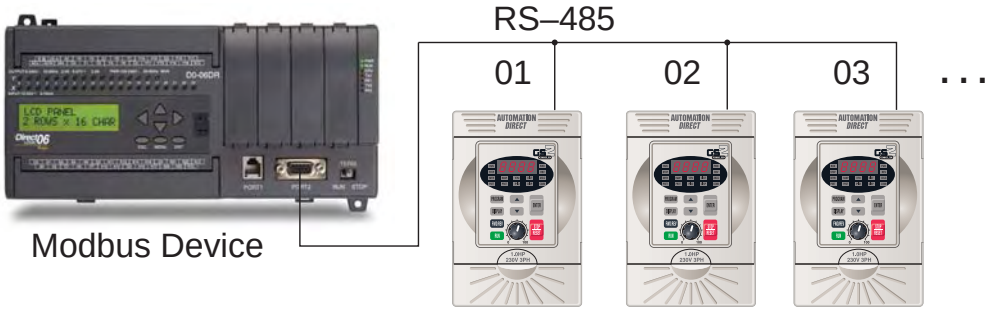

P9.01 Transmission Speed

Range: 00 to 03 Default Setting: 01

Setting
00: 4800 baud data transmission speed
01: 9600 baud data transmission speed
02: 19200 baud data transmission speed
03: 38400 baud data transmission speed

- Users can set parameters and control the operation of the AC drive via the RS-485 serial interface of a personal computer. This parameter is used to set the transmission speed between the computer and AC drive.

P9.02 Communication Protocol

Default Setting: 00

Settings:		
	00	MODBUS ASCII mode. <7 data bits, no parity, 2 stop bits>
	01	MODBUS ASCII mode <7 data bits, even parity, 1 stop bit>
	02	MODBUS ASCII mode <7 data bits, odd parity, 1 stop bit>
	03	MODBUS RTU mode <8 data bits, no parity, 2 stop bits>
	04	MODBUS RTU mode <8 data bits, even parity, 1 stop bit>
	05	MODBUS RTU mode <8 data bits, odd parity, 1 stop bit>

P9.03 Transmission Fault Treatment

Default Setting: 00

Settings: 00 - Display fault and continue operating
01 - Display fault and RAMP to stop
02 - Display fault and COAST to stop
03 - No fault displayed and continue operating

P9.04 Time Out Detection

Range: 00 - Disable
01 - Enable

Default Setting: 00

•This parameter is used for ASCII mode. When this parameter is set to 01, it indicates that the over-time detection is enabled and the time slot between each character cannot exceed 500 ms.

P9.05 Time Out Duration

Range: 0.1 to 60.0 seconds

Default Setting: 0.5

P9.07 ◆ Parameter Lock

Default Setting: 00

Settings:		
	00	All parameters can be set and read
	01	All parameters are read only

P9.08 Restore to Default

Settings: 0 or 99

Default Setting: 00

•• **Setting 99 restores all parameters to factory defaults.** ••

P9.11 ◆ Block Transfer Parameter 1

Range: P0.00 to P8.01, P9.99 Default Setting: P9.99

The sequential block transfer parameters (P9.11 through P9.25) allow you to "group" various miscellaneous non-sequential parameters, so that only one PLC programming write instruction is required to update those parameters, instead of three separate write instructions.

- Example:
  Writing directly to three non-sequential parameters P1.00, P1.02, and P1.04 requires three separate write instructions from the PLC. However, those drive parameters can be updated with only one PLC write instruction to the sequential transfer blocks P9.11 through P9.13; if P9.11 is set to P1.00, P9.12 is set to P1.02, and P9.13 is set to P1.04.

P9.12 ◆ Block Transfer Parameter 2

Range: P0.00 to P8.01, P9.99 Default Setting: P9.99

P9.13 ◆ Block Transfer Parameter 3

Range: P0.00 to P8.01, P9.99 Default Setting: P9.99

P9.14 ◆ Block Transfer Parameter 4

Range: P0.00 to P8.01, P9.99 Default Setting: P9.99

P9.15 ◆ Block Transfer Parameter 5

Range: P0.00 to P8.01, P9.99 Default Setting: P9.99

P9.16 ◆ Block Transfer Parameter 6

Range: P0.00 to P8.01, P9.99 Default Setting: P9.99

P9.17 ◆ Block Transfer Parameter 7

Range: P0.00 to P8.01, P9.99 Default Setting: P9.99

P9.18 ◆ Block Transfer Parameter 8

Range: P0.00 to P8.01, P9.99 Default Setting: P9.99

P9.19 ◆ Block Transfer Parameter 9

Range: P0.00 to P8.01, P9.99 Default Setting: P9.99

P9.20 ◆ **Block Transfer Parameter 10**

Range: P0.00 to P8.01, P9.99 Default Setting: P9.99

P9.21 ◆ **Block Transfer Parameter 11**

Range: P0.00 to P8.01, P9.99 Default Setting: P9.99

P9.22 ◆ **Block Transfer Parameter 12**

Range: P0.00 to P8.01, P9.99 Default Setting: P9.99

P9.23 ◆ **Block Transfer Parameter 13**

Range: P0.00 to P8.01, P9.99 Default Setting: P9.99

P9.24 ◆ **Block Transfer Parameter 14**

Range: P0.00 to P8.01, P9.99 Default Setting: P9.99

P9.25 ◆ **Block Transfer Parameter 15**

Range: P0.00 to P8.01, P9.99 Default Setting: P9.99

P9.26 ◆ **Serial Comm Speed Reference**

Range: 0.0 to 400.0 Hz Default Setting: 60.0

- This parameter is used to set the Frequency Command when the AC drive is controlled by communication interface.

Note: In order for this parameter to function, the Source of Frequency Command (P4.00) must be set to 05.

P9.27 ◆**Serial Comm RUN Command**

Range: 00 - Stop Default Setting: 00
01 - Run

P9.28 ◆ **Serial Comm Direction Command**

Range: 00 - Forward Default Setting: 00
01 - Reverse

P9.29 ◆ Serial Comm External Fault

Range: 00 - No action
01 - External fault

Default Setting: 00

P9.30 ◆ Serial Comm Fault Reset

Range: 00 - No action
01 - Fault Reset

Default Setting: 00

P9.31 ◆ Serial Comm JOG Command

Range: 00 - Stop
01 - Jog

Default Setting: 00

P9.39 Firmware Version

Range: #.##

Default Setting: #.##

P9.41 GS Series Number

Default Setting: ##

Settings:		
	01	GS1
	02	GS2
	03	GS3
	04	GS4

P9.42 Manufacturer Model Information

Default Setting: ##

Settings:	00	GS2-20P5 (230V 1 ph/3ph 0.5hp)
	01	GS2-21P0 (230V 1 ph/3ph 1hp)
	02	GS2-22P0 (230V 1ph/3ph 2hp)
	03	GS2-23P0 (230V 1ph/3ph 3hp)
	04	GS2-25P0 (230V 3ph 5hp)
	05	GS2-27P5 (230V 3ph 7.5hp)
	06	Reserved
	07	GS2-41P0 (460V 3ph 1hp)
	08	GS2-42P0 (460V 3ph 2hp)
	09	GS2-43P0 (460V 3ph 3hp)
	10	GS2-45P0 (460V 3ph 5hp)
	11	GS2-47P0 (460V 3ph 7.5 hp)
	12	GS2-4010 (460V 3ph 10hp)
	13	GS2-10P2 (115V 1ph 0.25hp)
	14	GS2-10P5 (115V 1ph 0.5hp)
	15	GS2-11P0 (115V 1ph 1hp)
	16	Reserved
	17	Reserved
	18	Reserved
	19	Reserved
	20	Reserved
	21	GS2-51P0 (575V 3ph 1hp)
	22	GS2-52P0 (575V 3ph 2hp)
	23	GS2-53P0 (575V 3ph 3hp)
	24	GS2-55P0 (575V 3ph 5hp)
	25	GS2-57P5 (575V 3ph 7.5hp)
	26	GS2-5010 (575V 3ph 10hp)

GS2 Modbus Communications

In This Chapter...

Communication Parameters Summary 5–2
GS2 Parameter Memory Addresses 5–4
GS2 Status Addresses 5–9
Communicating with *Direct*Logic PLCs 5–12
Step 1: Choose the Appropriate CPU. 5–12
Step 2: Make the Connections 5–12
Step 3: Set AC Drive Parameters 5–14
Step 4: Configure the *Direct*LOGIC CPUs 5–14
*Direct*LOGIC Modbus Port Configuration 5–15
*Direct*LOGIC Modbus Ladder Programming 5–16
Communicating with Third-party Devices 5–30
Data Format 5–31
Communication Protocol 5–32

Communication Parameters Summary

A summary of the GS2 Communications Parameters is listed below. For a complete listing of the GS2 Parameter, refer to CHAPTER 4.

Communications Parameters			
GS2 Parameter	**Description**	**Range**	**Default**
P 9.00	Communication Address	01 to 254	01
P 9.01	Transmission Speed	00: 4800 baud 01: 9600 baud 02: 19200 baud 03: 38400 baud	01
P 9.02	Communication Protocol	00: Modbus ASCII mode 7 data bits,no parity,2 stop bits 01: Modbus ASCII mode 7 data bits,even parity,1 stop bit 02: Modbus ASCII mode 7 data bits,odd parity,1 stop bit 03: Modbus RTU mode 8 data bits,no parity,2 stop bits 04: Modbus RTU mode 8 data bits,even parity,1 stop bit 05: Modbus RTU mode 8 data bits,odd parity,1 stop bit	00
P 9.03	Transmission Fault Treatment	00: Display fault and continue operating 01: Display fault and RAMP to stop 02: Display fault and COAST to stop 03: No fault displayed and continue operating	00
P 9.04	Time Out Detection	00: Disable 01: Enable	00
P 9.05	Time Out Duration	0.1 to 60.0 seconds	0.5
◆ **P 9.07**	Parameter Lock	00: All parameters can be set and read 01: All parameters are read-only	00
P 9.08	Restore to Default	99: Restores all parameters to factory defaults	00
◆ **P 9.11**	Block Transfer Parameter 1	P0.00 to P8.01, P9.99	P 9.99
◆ **P 9.12**	Block Transfer Parameter 2	P0.00 to P8.01, P9.99	P 9.99
◆ **P 9.13**	Block Transfer Parameter 3	P0.00 to P8.01, P9.99	P 9.99
◆ **P 9.14**	Block Transfer Parameter 4	P0.00 to P8.01, P9.99	P 9.99
◆ **P 9.15**	Block Transfer Parameter 5	P0.00 to P8.01, P9.99	P 9.99
◆ **P 9.16**	Block Transfer Parameter 6	P0.00 to P8.01, P9.99	P 9.99
◆ **P 9.17**	Block Transfer Parameter 7	P0.00 to P8.01, P9.99	P 9.99
◆ **Parameter can be set during RUN Mode.**			

Communications Parameters (continued)			
GS2 Parameter	**Description**	**Range**	**Default**
◆ **P 9.18**	Block Transfer Parameter 8	P0.00 to P8.01, P9.99	P 9.99
◆ **P 9.19**	Block Transfer Parameter 9	P0.00 to P8.01, P9.99	P 9.99
◆ **P 9.20**	Block Transfer Parameter 10	P0.00 to P8.01, P9.99	P 9.99
◆ **P 9.21**	Block Transfer Parameter 11	P0.00 to P8.01, P9.99	P 9.99
◆ **P 9.22**	Block Transfer Parameter 12	P0.00 to P8.01, P9.99	P 9.99
◆ **P 9.23**	Block Transfer Parameter 13	P0.00 to P8.01, P9.99	P 9.99
◆ **P 9.24**	Block Transfer Parameter 14	P0.00 to P8.01, P9.99	P 9.99
◆ **P 9.25**	Block Transfer Parameter 15	P0.00 to P8.01, P9.99	P 9.99
◆ **P 9.26**	Serial Comm Speed Reference	0.0 to 400.0 Hz	60.0
◆ **P 9.27**	Serial Comm RUN Command	00: Stop 01: Run	00
◆ **P 9.28**	Serial Comm Direction Command	00: Forward 01: Reverse	00
◆ **P 9.29**	Serial Comm External Fault	00: No fault 01: External fault	00
◆ **P 9.30**	Serial Comm Fault Reset	00: No action 01: Fault Reset	00
◆ **P 9.31**	Serial Comm JOG Command	00: Stop 01: Jog	00
P 9.39	Firmware Version	#.##	#.##
P 9.41	GS Series Number	01: GS1 02: GS2 03: GS3	##
P 9.42	Manufacturer Model Information	00: GS2-20P5 (230V 1ph/3ph 0.5hp) 01: GS2-21P0 (230V 1ph/3ph 1hp) 02: GS2-22P0 (230V 1ph/3ph 2hp) 03: GS2-23P0 (230V 1ph/3ph 3hp) 04: GS2-25P0 (230V 3ph 5hp) 05: GS2-27P5 (230V 3ph 7.5hp) 06: Reserved 07: GS2-41P0 (460V 3ph 1hp) 08: GS2-42P0 (460V 3ph 2hp) 09: GS2-43P0 (460V 3ph 3hp) 10: GS2-45P0 (460V 3ph 5hp) 11: GS2-47P5 (460V 3ph 7.5hp) 12: GS2-4010 (460V 3ph 10hp) 13: GS2-10P2 (115V 1ph 0.25hp) 14: GS2-10P5 (115V 1ph 0.5hp) 15: GS2-11P0 (115V 1ph 1hp) 16~20: Reserved 21: GS2-51P0 (575V 3ph 1hp) 22: GS2-52P0 (575V 3ph 2hp) 23: GS2-53P0 (575V 3ph 3hp) 24: GS2-55P0 (575V 3ph 5hp) 25: GS2-57P5 (575V 3ph 7.5hp) 26: GS2-5010 (575V 3ph 10hp)	##
◆ **Parameter can be set during RUN Mode.**			

GS2 Parameter Memory Addresses

Parameter Memory Addresses				
GS2 Parameter	**Description**	**Hexadecimal**	**Modbus Decimal**	**Octal**
Motor Parameter Addresses				
P 0.00	Motor Nameplate Voltage	0000	40001	0
P 0.01	Motor Nameplate Amps	0001	40002	1
P 0.02	Motor Base Frequency	0002	40003	2
P 0.03	Motor Base RPM	0003	40004	3
P 0.04	Motor Maximum RPM	0004	40005	4
Ramp Parameter Addresses				
P 1.00	Stop Methods	0100	40257	400
◆ **P 1.01**	Acceleration Time 1	0101	40258	401
◆ **P 1.02**	Deceleration Time 1	0102	40259	402
P 1.03	Accel S-curve	0103	40260	403
P 1.04	Decel S-curve	0104	40261	404
◆ **P 1.05**	Acceleration Time 2	0105	40262	405
◆ **P 1.06**	Deceleration Time 2	0106	40263	406
P 1.07	Select method to use 2nd Accel/Decel	0107	40264	407
P 1.08	Accel 1 to Accel 2 frequency transition	0108	40265	410
P 1.09	Decel 2 to Decel 1frequency transition	0109	40266	411
P 1.10	Skip Frequency 1	010A	40267	412
P 1.11	Skip Frequency 2	010B	40268	413
P 1.12	Skip Frequency 3	010C	40269	414
P 1.17	Skip Frequency Band	0111	40274	421
P 1.18	DC Injection Current Level	0112	40275	422
P 1.20	DC Injection during Start-up	0114	40277	424
P 1.21	DC Injection during Stopping	0115	40278	425
P 1.22	Start-point for DC Injection	0116	40279	426
Volts/Hertz Parameter Addresses				
P 2.00	Volts/Hertz Settings	0200	40513	1000
◆ **P 2.01**	Slip Compensation	0201	40514	1001
◆ **P 2.02**	Auto-torque Boost	0202	40515	1002
P 2.04	Mid-point Frequency	0204	40517	1004
P 2.05	Mid-point Voltage	0205	40518	1005
P 2.06	Min. Output Frequency	0206	40519	1006
P 2.07	Min. Output Voltage	0207	40520	1007
P 2.08	PWM Carrier Frequency	0208	40521	1010
◆ **Parameter can be set during RUN Mode.**				

Parameter Memory Addresses (continued)				
GS2 Parameter	**Description**	**Hexadecimal**	**Modbus Decimal**	**Octal**
Digital Parameter Addresses				
P 3.00	Source of Operation Command	0300	40769	1400
P 3.01	Multi-function Input Terminals (DI1 - DI2)	0301	40770	1401
P 3.02	Multi-function Input (DI3)	0302	40771	1402
P 3.03	Multi-function Input (DI4)	0303	40772	1403
P 3.04	Multi-function Input (DI5)	0304	40773	1404
P 3.05	Multi-function Input (DI6)	0305	40774	1405
P 3.11	Multi-Function Output Terminal 1	030B	40780	1413
P 3.12	Multi-Function Output Terminal 2	030C	40781	1414
◆ **P 3.16**	Desired Frequency	0310	40785	1420
◆ **P 3.17**	Desired Current	0311	40786	1421
◆ **P 3.18**	PID Deviation Level	0312	40787	1422
◆ **P 3.19**	PID Deviation Time	0313	40788	1423
Analog Parameter Addresses				
P 4.00	Source of Frequency Command	0400	41025	2000
P 4.01	Analog Input Offset Polarity	0401	41026	2001
◆ **P 4.02**	Analog Input Offset	0402	41027	2002
◆ **P 4.03**	Analog Input Gain	0403	41028	2003
P 4.04	Analog Input Reverse Motion Enable	0404	41029	2004
P 4.05	Loss of ACI Signal (4-20mA)	0405	41030	2005
◆ **P 4.11**	Analog Output Signal	040B	41036	2013
◆ **P 4.12**	Analog Output Gain	040C	41037	2014
Presets Parameter Addresses				
◆ **P 5.00**	Jog	0500	41281	2400
◆ **P 5.01**	Multi-Speed 1	0501	41282	2401
◆ **P 5.02**	Multi-Speed 2	0502	41283	2402
◆ **P 5.03**	Multi-Speed 3	0503	41284	2403
◆ **P 5.04**	Multi-Speed 4	0504	41285	2404
◆ **P 5.05**	Multi-Speed 5	0505	41286	2405
◆ **P 5.06**	Multi-Speed 6	0506	41287	2406
◆ **P 5.07**	Multi-Speed 7	0507	41288	2407
◆ **Parameter can be set during RUN Mode.**				

Parameter Memory Addresses (continued)				
GS2 Parameter	**Description**	**Hexadecimal**	**Modbus Decimal**	**Octal**
Protection Parameter Addresses				
P 6.00	Electronic Thermal Overload Relay	0600	41537	3000
P 6.01	Auto Restart after Fault	0601	41538	3001
P 6.02	Momentary Power Loss	0602	41539	3002
P 6.03	Reverse Operation Inhibit	0603	41540	3003
P 6.04	Auto Voltage Regulation	0604	41541	3004
P 6.05	Over-VoltageTrip Protection	0605	41542	3005
P 6.06	Auto Adjustable Accel/Decel	0606	41543	3006
P 6.07	Over-Torque Detection Mode	0607	41544	3007
P 6.08	Over-Torque Detection Level	0608	41545	3010
P 6.09	Over-Torque Detection Time	0609	41546	3011
P 6.10	Over-Current Stall Prevention during Acceleration	060A	41547	3012
P 6.11	Over-Current Stall Prevention during Operation	060B	41548	3013
P 6.12	Maximum Allowable Power Loss Time	060C	41549	3014
P 6.13	Base-Block Time for Speed Search	060D	41550	3015
P 6.14	Maximum Speed Search Current Level	060E	41551	3016
P 6.15	Upper Bound of Output Frequency	060F	41552	3017
P 6.16	Lower Bound of Output Frequency	0610	41553	3020
P 6.31	Present Fault Record	061F	41568	3037
P 6.32	Second Most Recent Fault Record	0620	41569	3040
P 6.33	Third Most Recent Fault Record	0621	41570	3041
P 6.34	Fourth Most Recent Fault Record	0622	41571	3042
P 6.35	Fifth Most Recent Fault Record	0623	41572	3043
P 6.36	Sixth Most Recent Fault Record	0624	41573	3044

◆ **Parameter can be set during RUN Mode.**

Parameter Memory Addresses (continued)				
GS2 Parameter	**Description**	**Hexadecimal**	**Modbus Decimal**	**Octal**
PID Parameter Addresses				
P 7.00	Input Terminal for PID Feedback	0700	41793	3400
P 7.01	PV 100% Value	0701	41794	3401
P 7.02	PID Setpoint Source	0702	41795	3402
◆ **P 7.10**	Keypad PID Setpoint	070A	41803	3412
◆ **P 7.11**	PID Multi-setpoint 1	070B	41804	3413
◆ **P 7.12**	PID Multi-setpoint 2	070C	41805	3414
◆ **P 7.13**	PID Multi-setpoint 3	070D	41806	3415
◆ **P 7.14**	PID Multi-setpoint 4	070E	41807	3416
◆ **P 7.15**	PID Multi-setpoint 5	070F	41808	3417
◆ **P 7.16**	PID Multi-setpoint 6	0710	41809	3420
◆ **P 7.17**	PID Multi-setpoint 7	0711	41810	3421
◆ **P 7.20**	Proportional Control	0714	41813	3424
◆ **P 7.21**	Integral Control	0715	41814	3425
◆ **P 7.22**	Derivative Control	0716	41815	3426
P 7.23	Upper Bound for Integral Control	0717	41816	3427
P 7.24	Derivative Filter Time Constant	0718	41817	3430
P 7.25	PID Output Frequency Limit	0719	41818	3431
P 7.26	Feedback Signal Detection Time	071A	41819	3432
P 7.27	PID Feedback Loss	071B	41820	3433
Display Parameter Addresses				
◆ **P 8.00**	User Defined Display Function	0800	42049	4000
◆ **P 8.01**	Frequency Scale Factor	0801	42050	4001
◆ **Parameter can be set during RUN Mode.**				

Parameter Memory Addresses (continued)				
GS2 Parameter	Description	Hexadecimal	Modbus Decimal	Octal
Communications Parameter Addresses				
P 9.00	Communication Address	0900	42305	4400
P 9.01	Transmission Speed	0901	42306	4401
P 9.02	Communication Protocol	0902	42307	4402
P 9.03	Transmission Fault Treatment	0903	42308	4403
P 9.04	Time Out Detection	0904	42309	4404
P 9.05	Time Out Duration	0905	42310	4405
◆ **P 9.07**	Parameter Lock	0907	42312	4407
P 9.08	Restore to Default	0908	42313	4410
◆ **P 9.11**	Block Transfer Parameter 1	090B	42316	4413
◆ **P 9.12**	Block Transfer Parameter 2	090C	42317	4414
◆ **P 9.13**	Block Transfer Parameter 3	090D	42318	4415
◆ **P 9.14**	Block Transfer Parameter 4	090E	42319	4416
◆ **P 9.15**	Block Transfer Parameter 5	090F	42320	4417
◆ **P 9.16**	Block Transfer Parameter 6	0910	42321	4420
◆ **P 9.17**	Block Transfer Parameter 7	0911	42322	4421
◆ **P 9.18**	Block Transfer Parameter 8	0912	42323	4422
◆ **P 9.19**	Block Transfer Parameter 9	0913	42324	4423
◆ **P 9.20**	Block Transfer Parameter 10	0914	42325	4424
◆ **P 9.21**	Block Transfer Parameter 11	0915	42326	4425
◆ **P 9.22**	Block Transfer Parameter 12	0916	42327	4426
◆ **P 9.23**	Block Transfer Parameter 13	0917	42328	4427
◆ **P 9.24**	Block Transfer Parameter 14	0918	42329	4430
◆ **P 9.25**	Block Transfer Parameter 15	0919	42330	4431
◆ **P 9.26**	Serial Comm Speed Reference	091A	42331	4432
◆ **P 9.27**	Serial Comm RUN Command	091B	42332	4433
◆ **P 9.28**	Serial Comm Direction Command	091C	42333	4434
◆ **P 9.29**	Serial Comm External Fault	091D	42334	4435
◆ **P 9.30**	Serial Comm Fault Reset	091E	42335	4436
◆ **P 9.31**	Serial Comm JOG Command	091F	42336	4437
P 9.41	GS Series Number	0929	42346	4451
P 9.42	Manufacturer Model Information	092A	42347	4452
◆ **Parameter can be set during RUN Mode.**				

GS2 Status Addresses

The GS2 Series AC drive has status memory addresses that are used to monitor the AC drive. The status addresses and value definitions are listed below.

Status Addresses (Read Only)

GS2 Status Addresses			
Description	**Hexadecimal**	**Modbus Decimal**	**Octal**
Status Monitor 1	2100	48449	20400
Status Monitor 2	2101	48450	20401
Frequency Command F	2102	48451	20402
Output Frequency H	2103	48452	20403
Output Current A	2104	48453	20404
DC Bus Voltage d	2105	48454	20405
Output Voltage U	2106	48455	20406
Motor RPM	2107	48456	20407
Scale Frequency (Low Word)	2108	48457	20410
Scale Frequency (High Word)	2109	48458	20411
Power Factor Angle	210A	48459	20412
% Load	210B	48460	20413
Firmware Version	2110	48465	20420

Status Monitor 1 h2100

Error Codes:

00: No fault occurred
01: Over-current(oc)
02: Over-voltage(ov)
03: Overheat (oH)
04: Overload (oL)
05: Overload 1 (oL1)
06: Overload 2 (oL2)
07: External Fault (EF)
08: CPU failure 1 (cF1)
09: CPU failure 2 (cF2)
10: CPU failure 3 (cF3)
11: Hardware Protection Failure (HPF)
12: Over-current during accel (ocA)
13: Over-current during decel (ocd)
14: Over-current during steady state (ocn)
15: Ground fault or fuse failure (GFF)
16: Low voltage (Lv)
17: Input power 3-phase loss (PHL)
18: External Base-Block (bb)
19: Auto adjust accel/decel failure (cFA)
20: Software protection code (codE)

Status Monitor 2 h2101

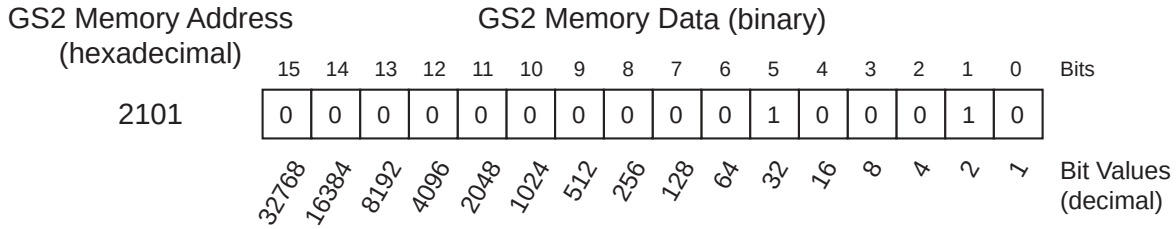

Status Monitor 2 - Memory Address h2101		
Address Bit(s)	**Bit(s) Value Binary (Decimal)**	**AC Drive Status**
0 and 1	00 (0)	Drive operation stopped (STOP)
	01 (1)	Run to Stop transition
	10 (2)	Standby
	11 (3)	Drive operation running (RUN)
2	1 (4)	JOG active
3 and 4	00 (0)	Rotational direction forward (FWD)
	01 (8)	REV to FWD transition
	10 (16)	FWD to REV transition
	11 (24)	Rotational direction reverse (REV)
5	1 (32)	Source of frequency determined by serial comm interface (P4.00 = 5)
6	1 (64)	Source of frequency determined by AI terminal (P4.00 = 2, 3, or 4)
7	1 (128)	Source of operation determined by serial comm interface (P3.00 = 3 or 4)
8	1 (256)	Parameters have been locked (9-07 = 1)
9 to 15	N/A	Reserved

Frequency Command F (XXX.X) h2102

Status location for the frequency setting of the AC drive.

Output Frequency H (XXX.X) h2103

Status location for the actual operating frequency present at the T1, T2, and T3 terminal.

Output Current A h2104

Status location for the output current present at the T1, T2, and T3 terminals.

DC-BUS Voltage d (XXX.X) h2105

Status location for the DC Bus Voltage.

Output Voltage U (XXX.X) h2106

Status location for the output voltage present at the T1, T2, and T3 terminals.

Motor RPM h2107

Status location for the present estimated speed of the motor.

Scale Frequency (Low word) h2108

Status location for result of output frequency x P 8.01 (low word).

Scale Frequency (High word) h2109

Status location for result of output frequency x P 8.01 (high word).

Power Factor Angle h210A

Status location for the power factor angle.

% Load h210B

Status location for the amount of load on the AC drive. (Output Current ÷ Drive Rated Current) x 100.

Firmware Version h2110

Status location for the firmware version of the AC drive.

Communicating with *Direct*LOGIC PLCs

The following steps explain how to connect to and communicate with the GS2 Series AC drives using ***Direct***LOGIC PLCs.

Step 1: Choose the Appropriate CPU.

The GS2 Series AC drives will communicate with the following ***Direct***LOGIC CPUs using Modbus communications:

- DL05
- DL06
- DL250(-1)
- DL260
- DL350
- DL450

Step 2: Make the Connections

First you must decide what type of interface will work best for your application. The GS2 Comm Port can accomodate an RS-232C or an RS-485 connection.

RS-232C

An RS-232C connection is somewhat limited. The maximum RS-232C network cable length is 15 meters (50 feet). In addition, using the RS-232C interface will allow you to connect an AC drive to only one PLC. For an RS-232C connection, set the GS2 DIP switches SW2 and SW3 to RS232.

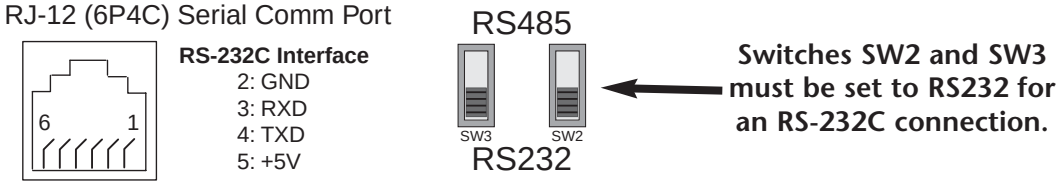

Use the following wiring diagrams to connect your ***Direct***LOGIC PLC to a GS2 Series AC drive with an RS-232C interface:

DL05: RS-232C Connection Wiring

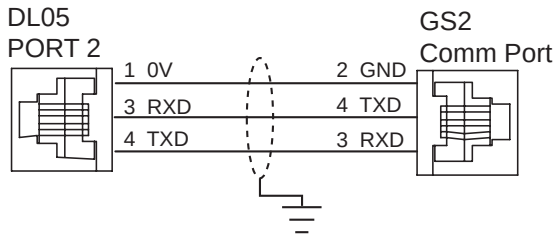

DL06/DL250/DL260: RS-232C Connection Wiring

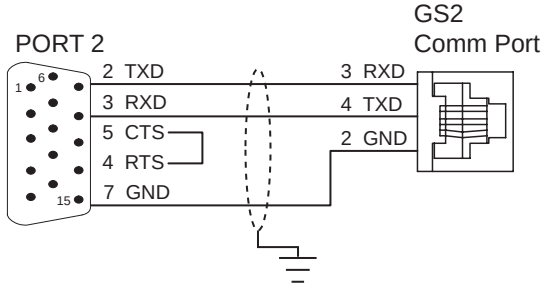

DL350/DL450: RS-232C Connection Wiring

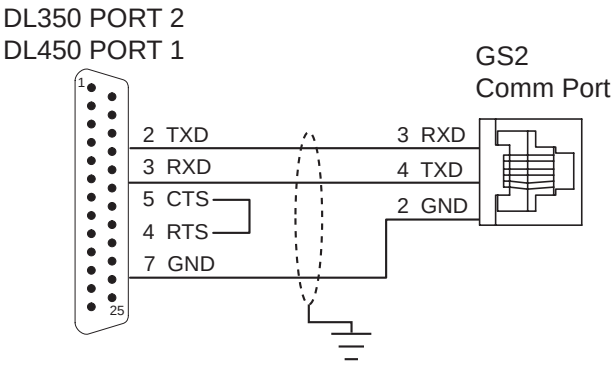

RS-232C to RS-485 Conversion

An RS-485 network cable can span up to 1000 meters (4000 feet). However, most ***Direct***LOGIC PLCs require an FA-ISOCON (RS-232C to RS-422/485 network adapter) in order to make this type of connection. For an RS-485 connection, set the GS2 DIP switches SW2 and SW3 to RS485.

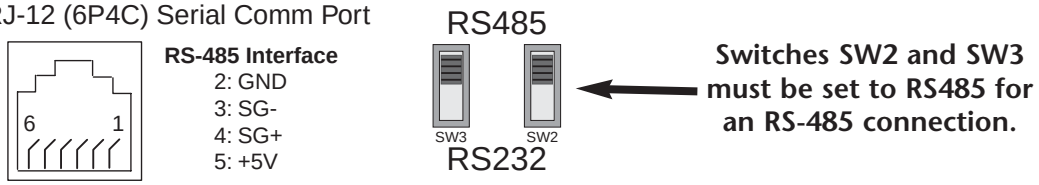

Use the following wiring diagrams to connect your ***Direct***LOGIC PLC to a GS2 Series AC drive with an RS-485 interface:

Note: If an FA-ISOCON module is used in your connection, set the module dipswitches S21 = ON; S22 - S27 = OFF; TERMINATE, BIAS, and DPX = ON. Refer to FA-ISOCON manual for more detailed information.

DL05: RS-485 Connection Wiring

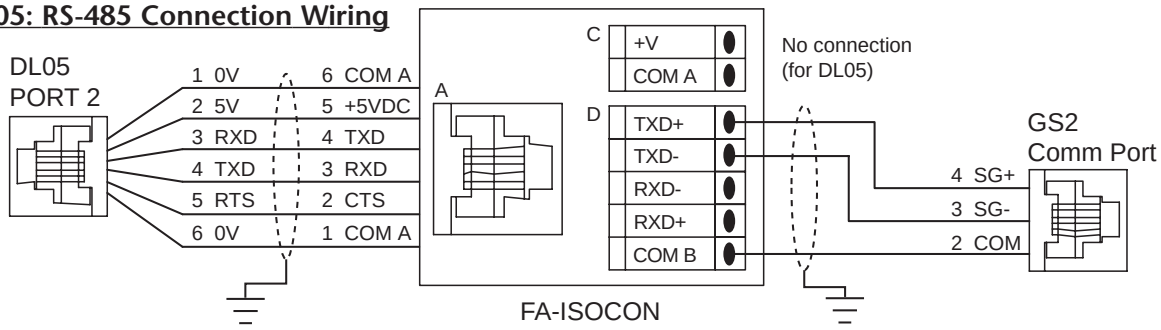

DL250: RS-485 Connection Wiring

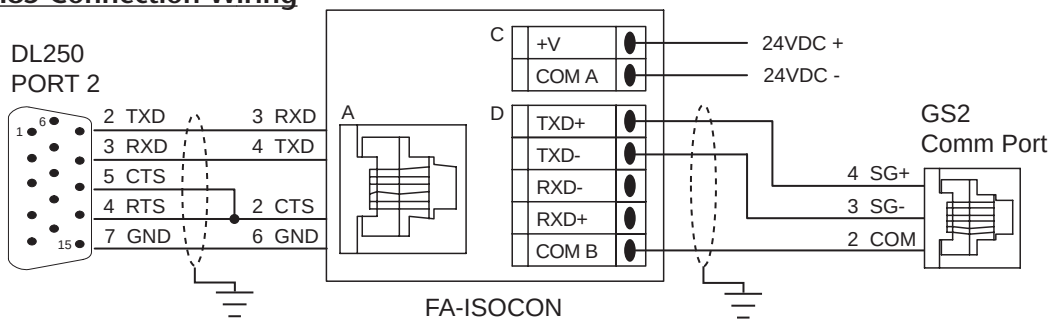

DL350/DL450: RS-485 Connection Wiring

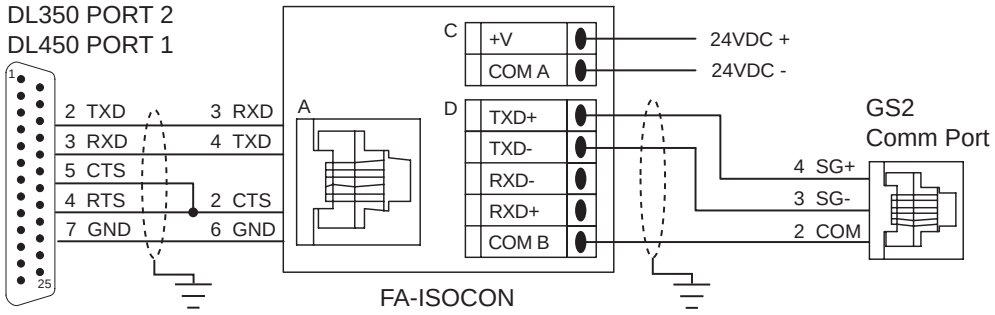

RS-485

DL06/DL260: RS-485 Connection Wiring

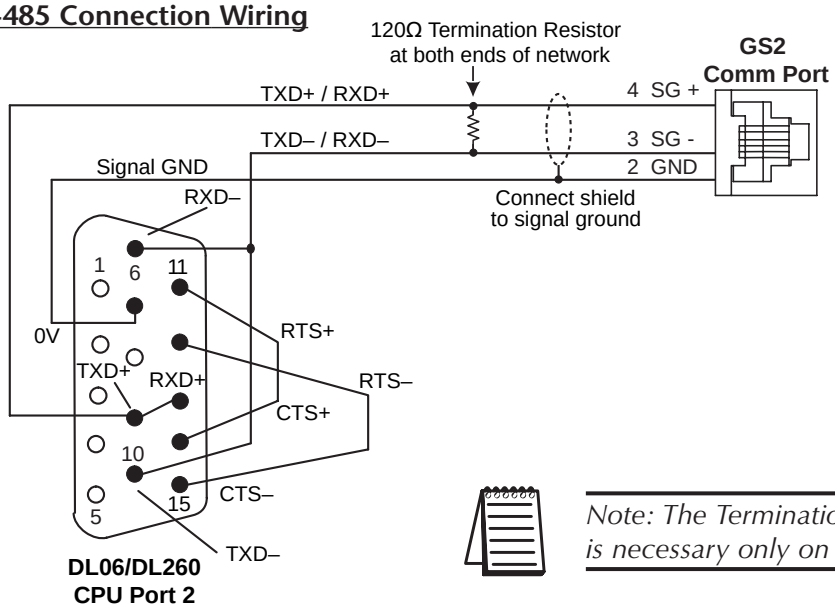

Note: The Termination Resistor is necessary only on large runs.

Step 3: Set AC Drive Parameters

The following parameters need to be set as shown in order to communicate properly.

P 3.00: 03 or 04 – Operation Determined by RS-232C/RS-485 interface. Keypad STOP is enabled (03) or disabled (04).

P 4.00: 05 – Frequency determined by RS-232/RS-485 communication interface

P 9.00: xx – Communication address 1-254 (unique for each device, see P 9.00)

P 9.01: 01 – 9600 baud data transmission speed

P 9.02: 05 – Modbus RTU mode <8 data bits, odd parity, 1 stop bit>

*Note: The previous list of parameter settings is the minimum required to communicate with a **Direct**LOGIC PLC. There may be other parameters that need to be set to meet the needs of your application.*

Step 4: Configure the *Direct*LOGIC CPUs

The ***Direct***LOGIC CPUs must be configured to communicate with the GS2 Series AC drives. This set up includes setting up the communication port and adding instructions to your logic program.

The set up for all of the ***Direct***LOGIC CPUs is very similar. However, there may be some subtle differences between CPUs. Refer to the appropriate CPU User Manual for the specifics on your ***Direct***LOGIC CPU.

Note: For instructions on Modbus Configuration for your specific CPU, refer to the appropriate CPU User Manual.

*Direct*LOGIC Modbus Port Configuration

The following configuration example is specific to the DL250(-1) CPU. Refer to the appropriate CPU User Manual for the specifics on your ***Direct***LOGIC CPU.

- In ***Direct***SOFT, choose the PLC menu, then Setup, then "Secondary Comm Port".
- From the **Port** list box, choose "Port 2".
- For the protocol, select "Modbus".

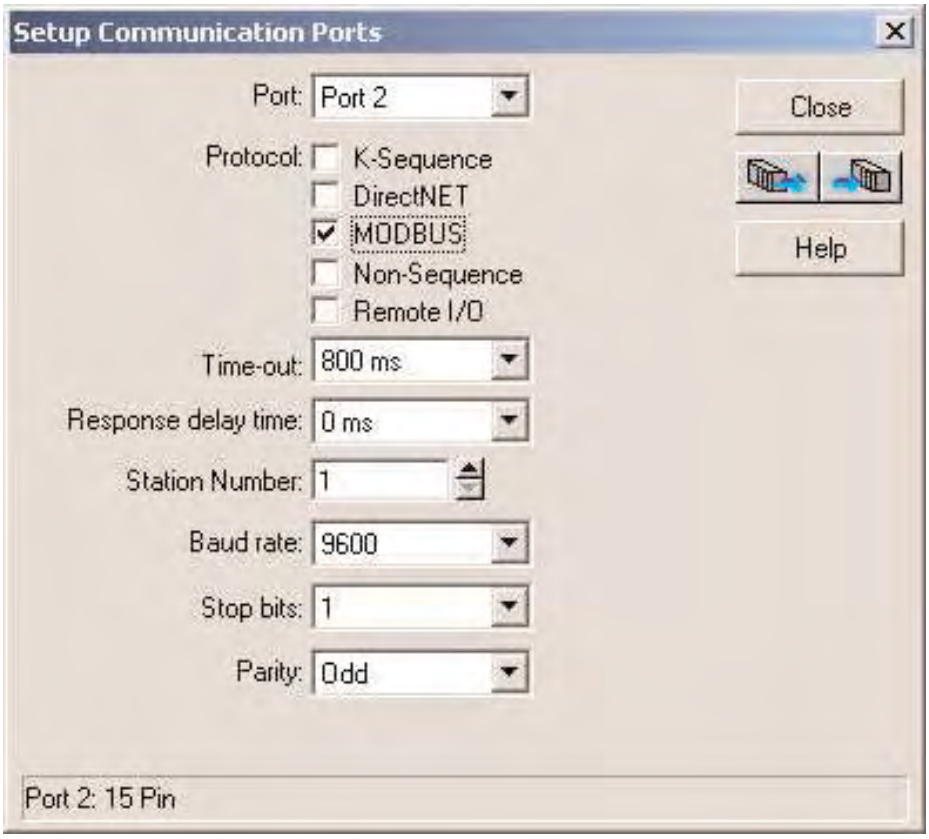

- In the **Timeout** list box, select "800 ms".
- **Response Delay Time** should be "0 ms".
- The **Station Number** should be set to "1" to make the DL250(-1) CPU a Modbus master.

Note: The DL250(-1) network instructions used in Master mode will access only slaves 1 to 90. Each slave must have a unique number.

- The **Baud Rate** should be set at "9600".
- In the **Stop Bits** list box, choose "1".
- In the **Parity** list box, choose "Odd".

*Direct*LOGIC Modbus Ladder Programming

The set up for all of the ***Direct***LOGIC CPUs is very similar. However, there may be some subtle differences between CPUs. Refer to the appropriate CPU User Manual for the specifics on your ***Direct***LOGIC CPU.

The following ladder program shows some examples of how to control the GS2 AC drive through Modbus RTU. The drive should be setup and tested for communications before it is connected to a load.

WARNING: A drive should never be connected to a load until any applicable communication programs have been proven.

Note: This program is for illustration purposes only, and is not intended for a true application.

In many drive applications, electromagnetic interference can sometimes cause frequent, short duration communication errors. Unless the application environment is perfect, an occasional communication error will occur. In order to distinguish between these non-fatal transients and a genuine communication failure, you may want to use the instructions as shown in Rungs 1 through 4.

Rung 1 monitors the number of times that the PLC attempts to communicate with the AC drive. When the PLC's communication attempts are successful, SP116 will count up, and SP117 will not count. Once the count reaches 9999, the counter will reset and resume counting.

Note: SP116 and SP117 are special relays in the ***Direct***LOGIC *CPUs that monitor the PLC's communications. SP116 is on when Port 2 is communicating with another device. SP117 is on when Port 2 has encountered a communication error.*

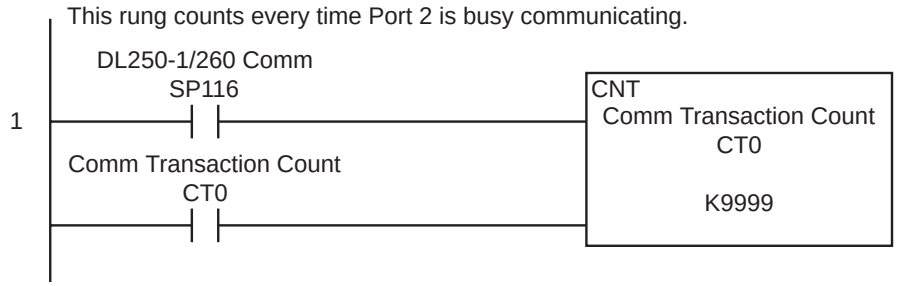

(Continued next page)

*Direct*LOGIC Modbus Ladder Programming (cont.)

Rungs 2 through 4 monitor the number of times the PLC fails in communicating with the AC drive. These instructions set the C0 control relay bit (to be used for alarm or shut-down) based on the number of times the SP117 bit is active in one minute. In this example, C0 will be set if the number of errors exceed 20 in one minute.

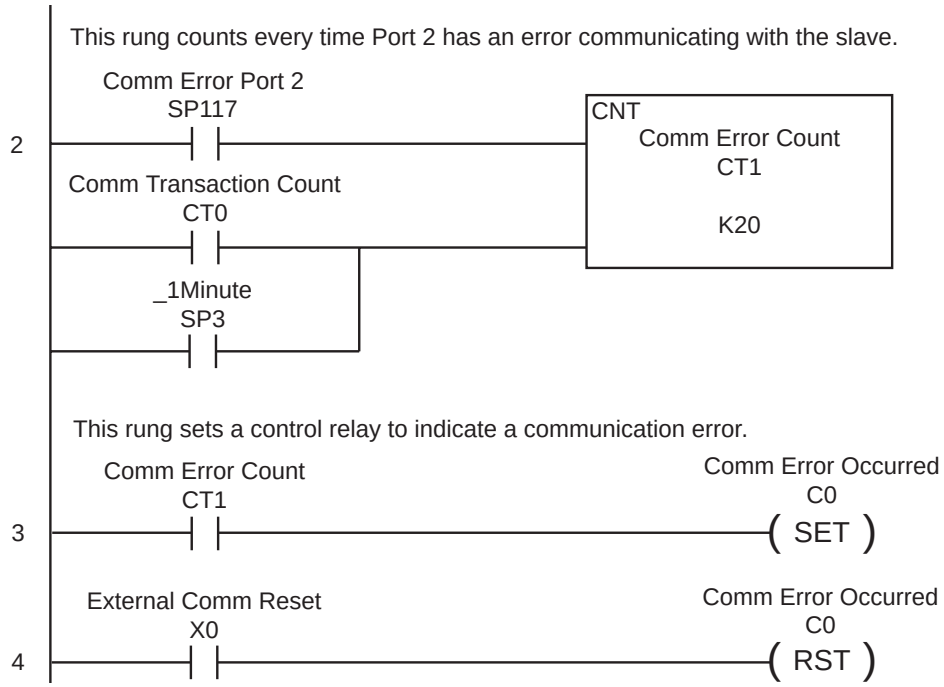

(Continued next page)

***Direct*LOGIC Modbus Ladder Programming (cont.)**

Rung 5 reads 12 of the status addresses of the GS2 AC drive. These instructions read the values from the GS2 status addresses, 2100 to 210B, and places the values into the PLC memory addresses, V2000 to V2013.

Notice the number in the RX box; V20400. 20400 is an **octal** number, as are all address references in the ***Direct***LOGIC PLCs. 20400 octal converted to hex is 2100, which is the first status address for the GS2 AC drive.

Note: Refer to your PLC User Manual for more specifics on Modbus addressing and address conversions.

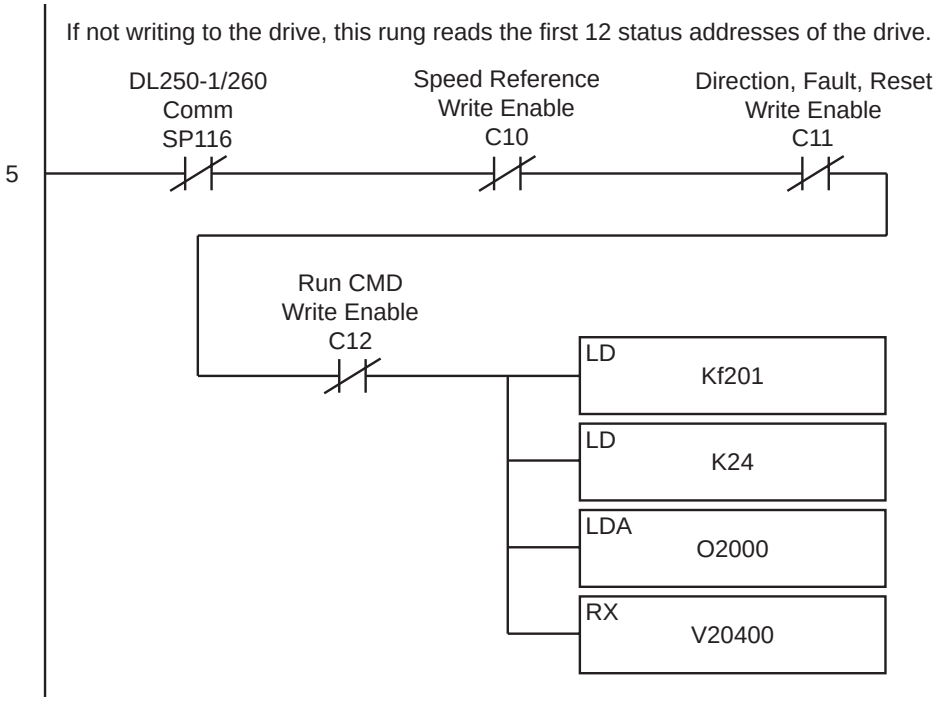

(Continued following "Alternate Modbus Read Instruction")

Alternate Modbus Read Instruction for DL06 and DL260 CPUs

The DL06 and DL260 CPUs offer "Modbus Read from Network" and "Modbus Write to Network" instructions that are easier to use than are the "Read from Network" and "Write to Network" instructions of the other ***Direct***LOGIC CPUs.

Rung 5, as shown below, reads the first 12 of the status addresses of the GS2 AC drive. This instruction reads the values from the GS2 status addresses, 2100 to 210B, and place the values into the PLC memory addresses V2000 to V2013.

The Start Slave Memory Address in the MRX box is 48449, which is a **Modbus decimal number (584/984 type)**. To convert 48449 decimal to hex, you first subtract 40001, and then convert the remainder to (hex) 2100. H2100 is the address for the GS2 Status Monitor.

Note: Refer to your PLC User Manual for more specifics on Modbus addressing and address conversions.

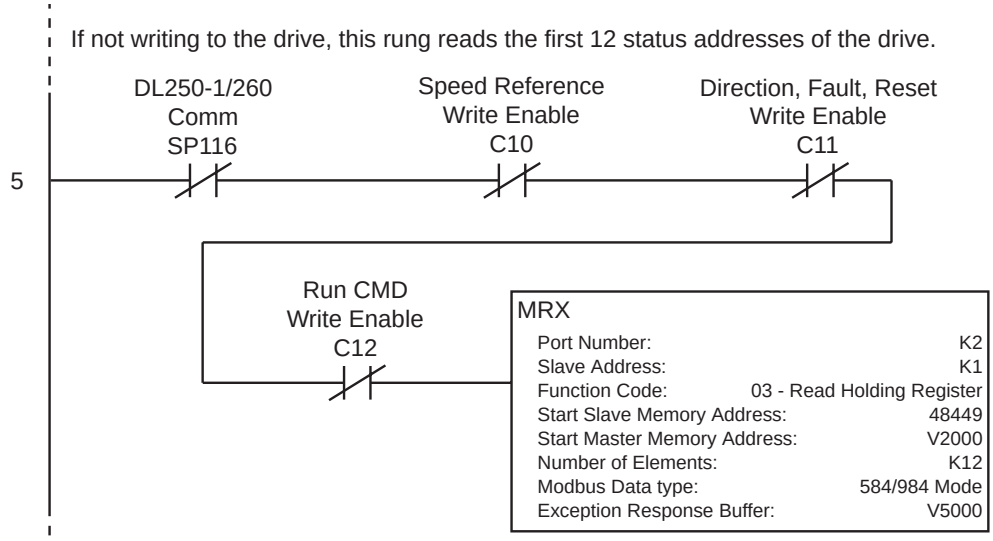

***Direct*LOGIC Modbus Ladder Programming (cont.)**

Rungs 6 through 9 show examples of how data read from the drive Status Addresses to set Control Relay bits that can be used for alarm or shut-down.

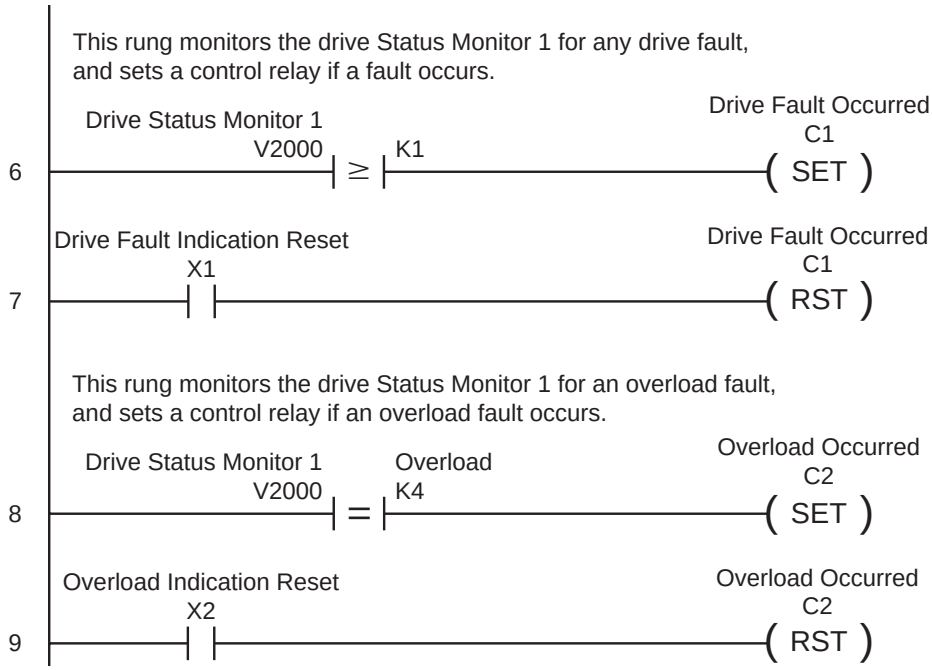

(Continued next page)

***Direct*LOGIC Modbus Ladder Programming (cont.)**

Rung 10 monitors the Speed Reference, Direction, External Fault, and Fault Reset Commands for changes. If there are any changes, then a control relay is set to allow the Speed Reference to be written to the drive in the next rung. (This control relay is also used in later rungs to enable writes for the other three listed commands.)

The program monitors the commands for changes, and then writes to the drive only when there is a change. This procedure promotes safe machine operation by isolating the Run Command from the write block.

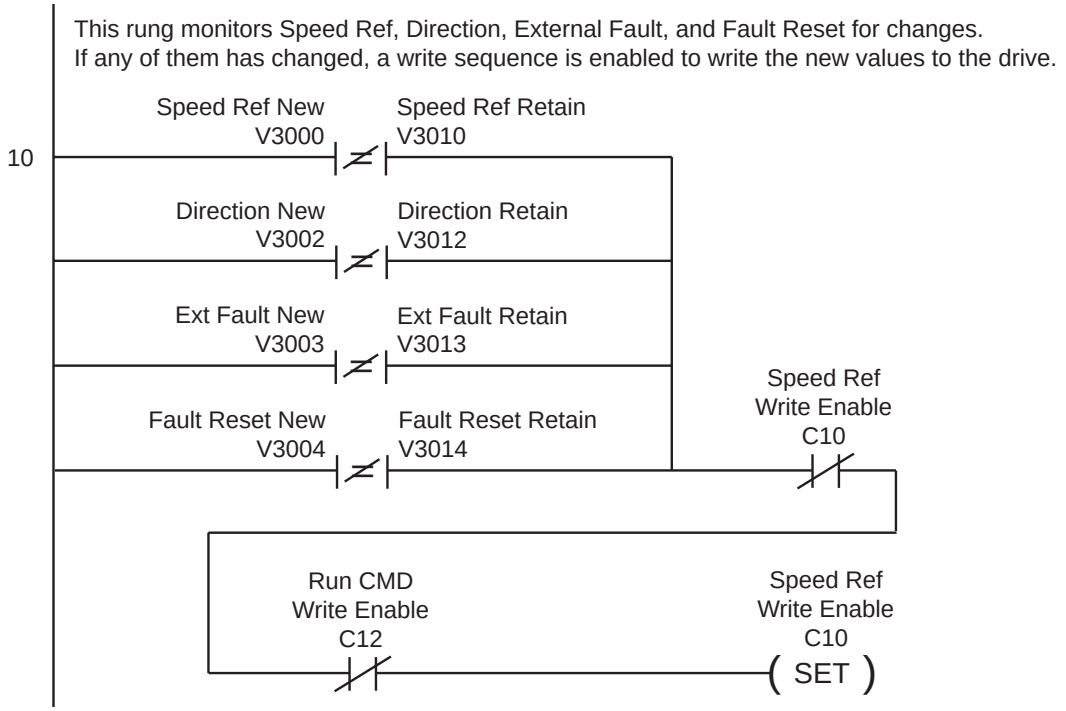

(Continued next page)

*Direct*LOGIC Modbus Ladder Programming (cont.)

Rungs 11 and 12 write the new Speed Reference, Direction, External Fault, and Fault Reset commands to the drive. We use two separate write commands in two separate rungs because the drive's Speed Reference command address (O4432) is not sequential with the Direction, External Fault, and Fault Reset command addresses (O4434 ~ O4436).

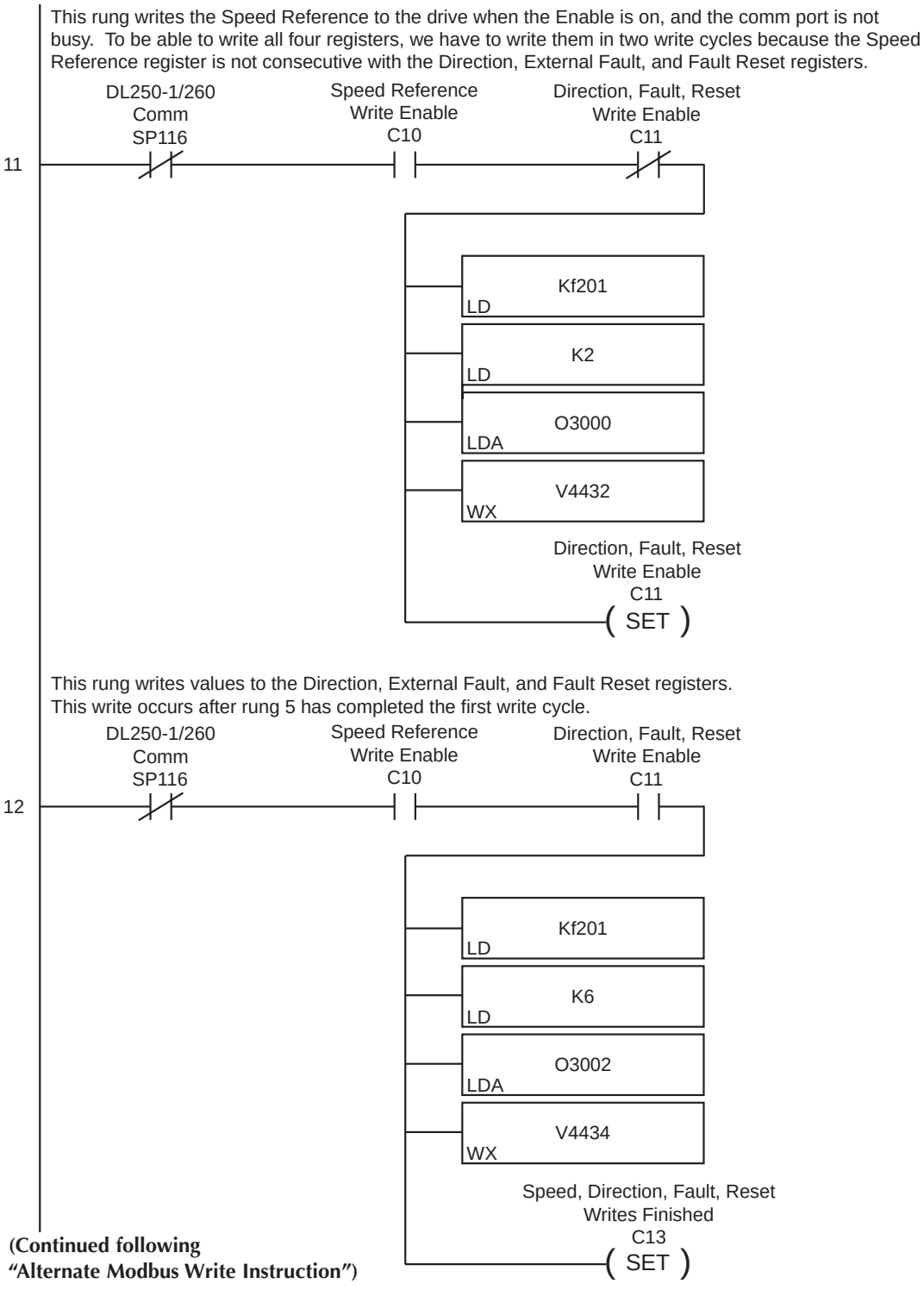

(Continued following "Alternate Modbus Write Instruction")

Alternate Modbus Write Instruction for DL06 and DL260 CPUs

The DL06 and DL260 CPUs offer "Modbus Read from Network" and "Modbus Write to Network" instructions that are easier to use than are the "Read from Network" and "Write to Network" instructions of the other ***Direct***LOGIC CPUs.

Rungs 11, 12, and 15 write the V3000 Speed Reference, V3002 Direction, V3003 External Fault, V3004 Fault Reset, and V3001 Run values to the corresponding drive Modbus decimal addresses 42331, 42333, 42334, 42335, and 42332. In the first MWX box, the slave start memory address is 42331, which is a **Modbus decimal number (584/984 type)**. To convert 42311 decimal to hex, you first subtract 40001, and then convert the remainder to hex (91A). 91A is the address for the Serial Comm Speed Reference.

Note: Refer to your PLC User Manual for more specifics on Modbus addressing and address conversions.

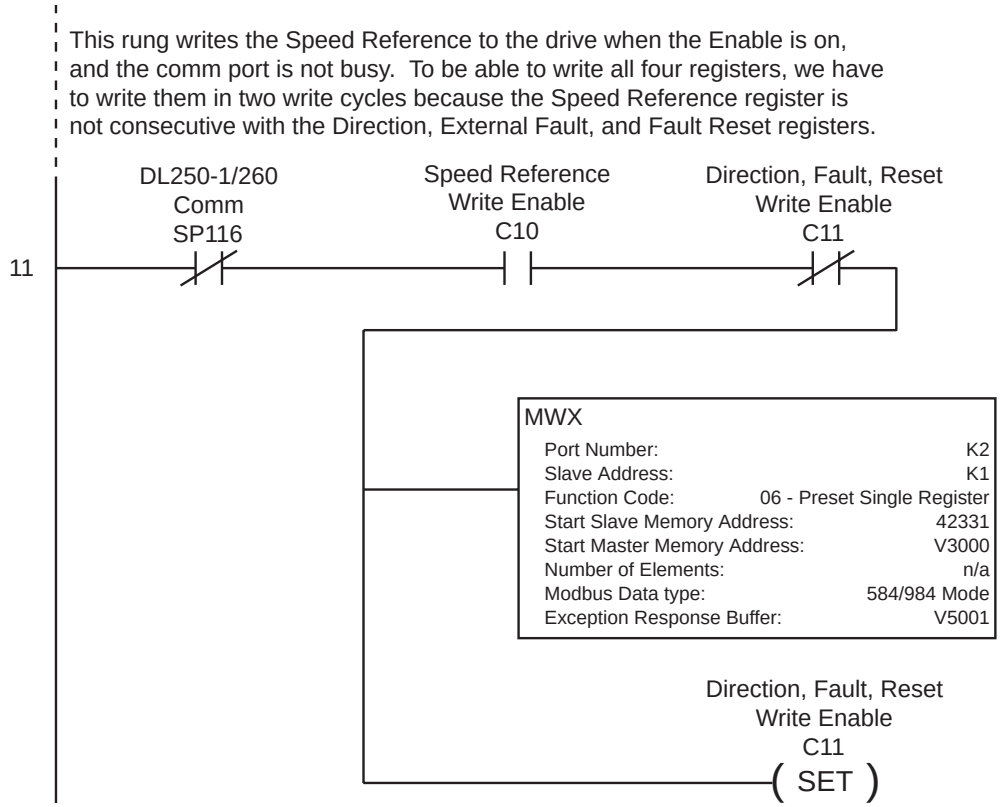

(Continued next page)

Alternate Modbus Write Instruction for DL06 and DL260 CPUs (cont.)

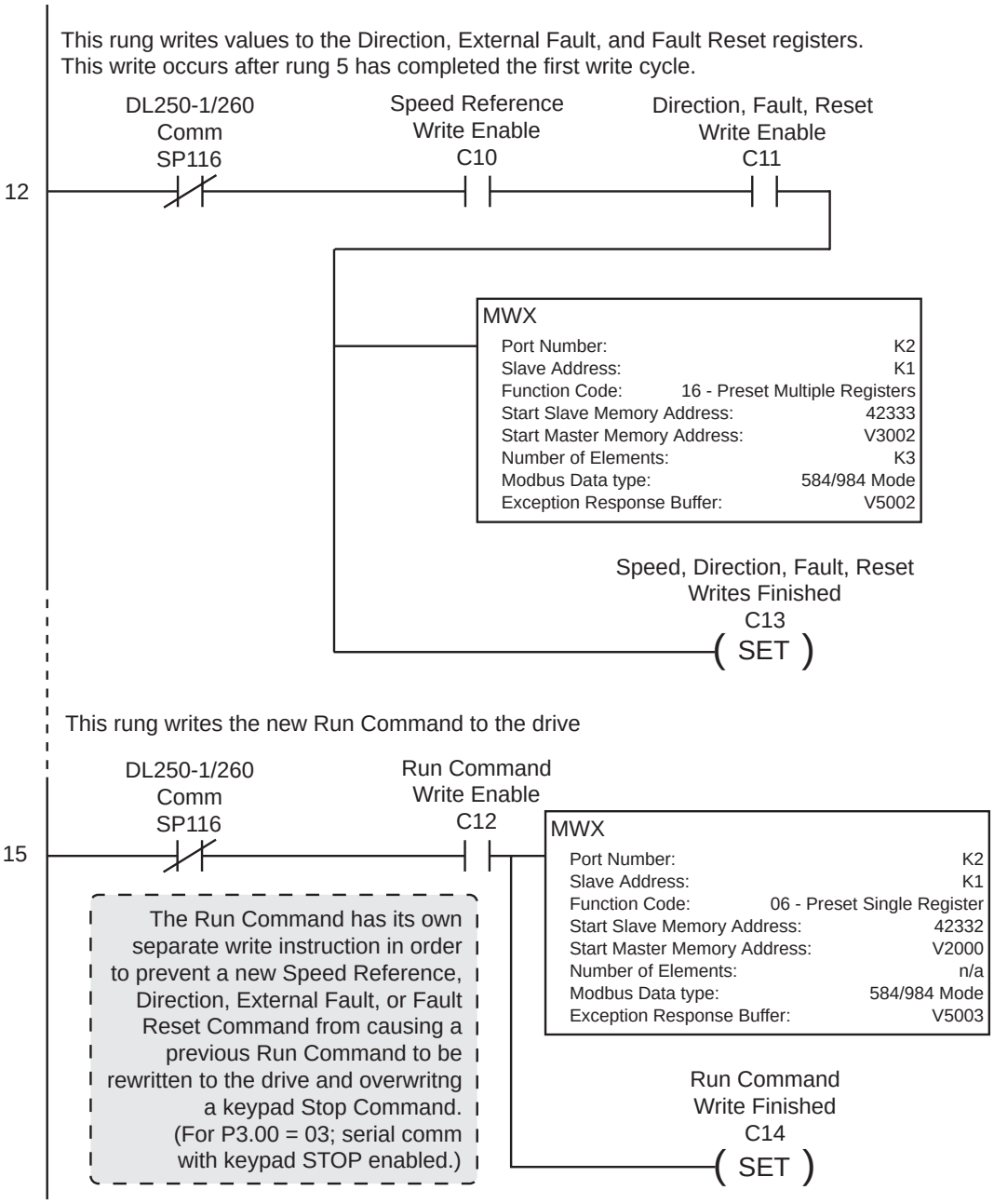

*Direct*LOGIC Modbus Ladder Programming (cont.)

Rung 13 loads the new Speed Reference, Direction, External Fault, and Fault Reset Command values into the retained value registers, and resets the applicable Write Enable control relays. Now the program is ready for the next command change detection and write to the drive.

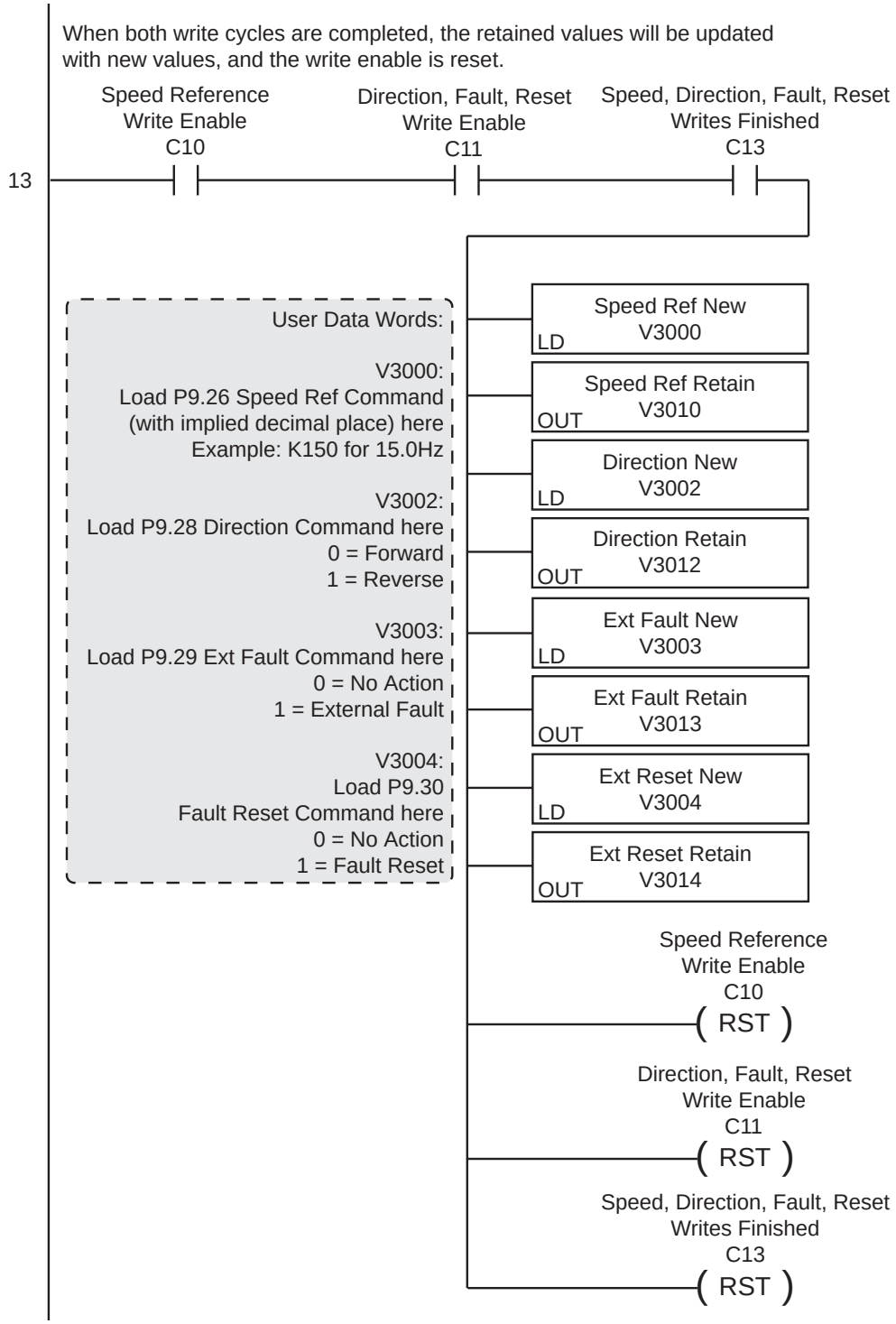

(Continued next page)

*Direct*LOGIC Modbus Ladder Programming (cont.)

Rungs 14 through 16 check for a Run Command change, write it to the drive, store the new value in the program register, and reset the enable control relays.

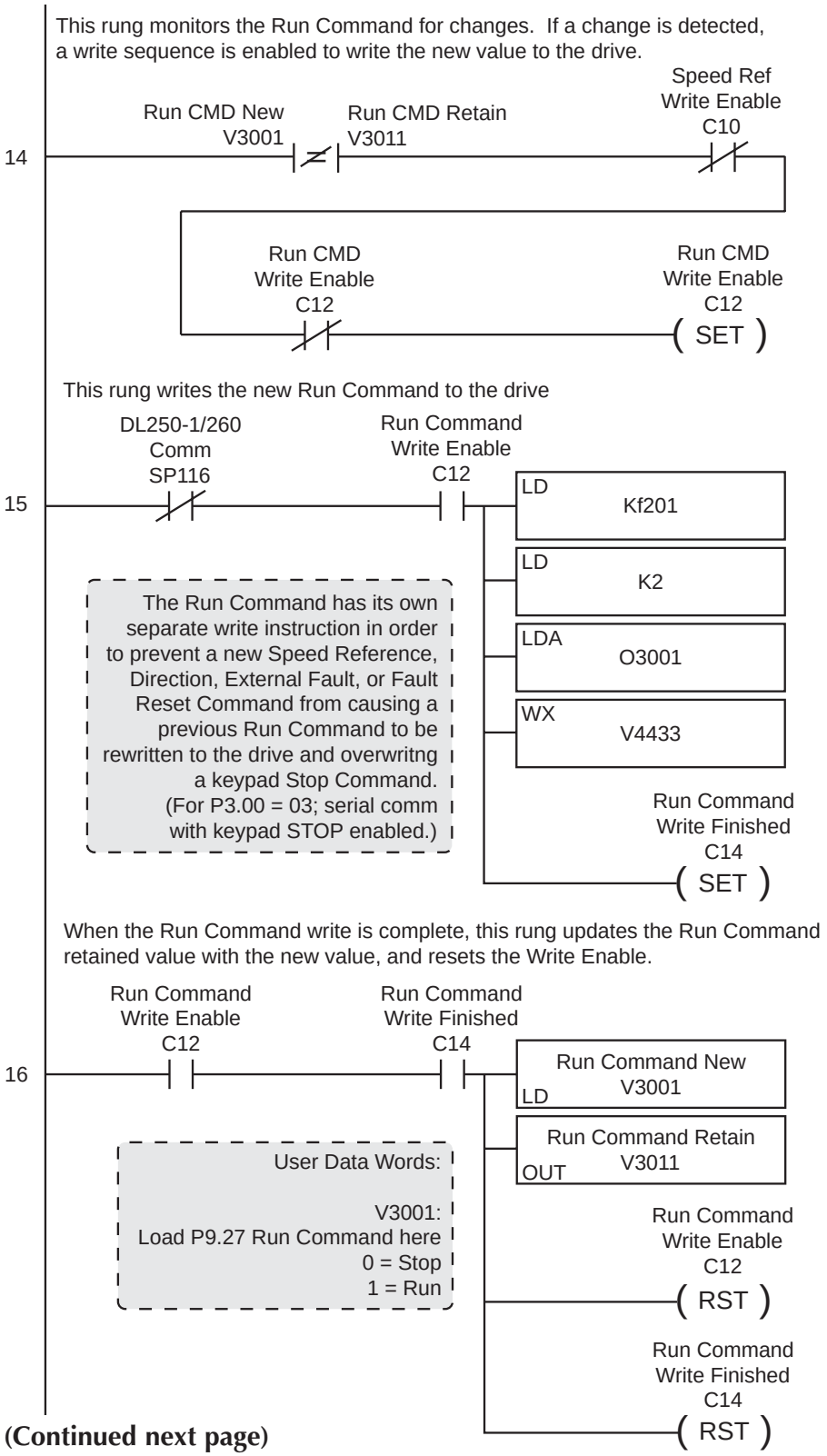

(Continued next page)

*Direct*LOGIC Modbus Ladder Programming (cont.)

Rungs 17 through 26 show an example of a method of inputting command values into the PLC.

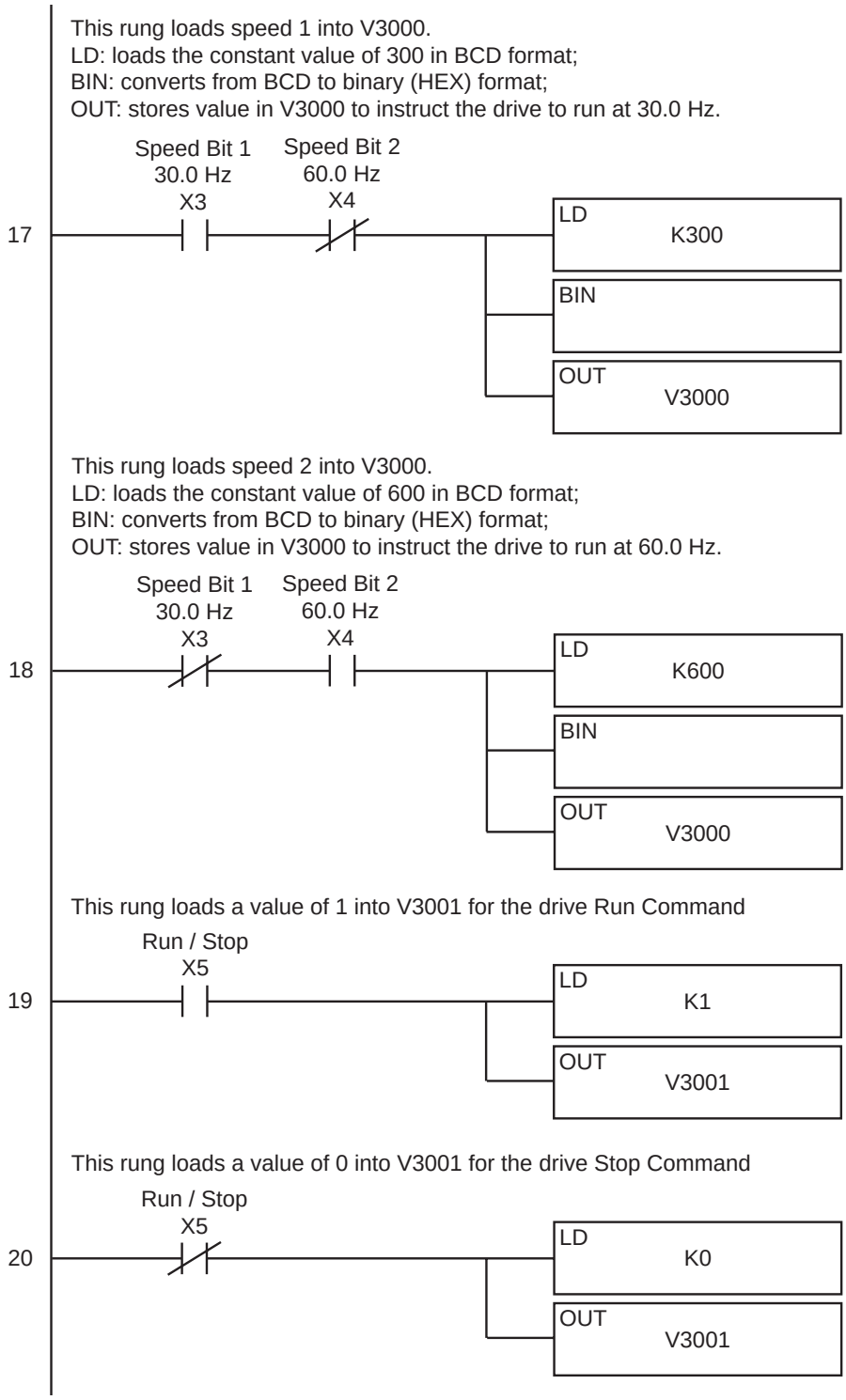

(Continued next page)

*Direct*LOGIC Modbus Ladder Programming (cont.)

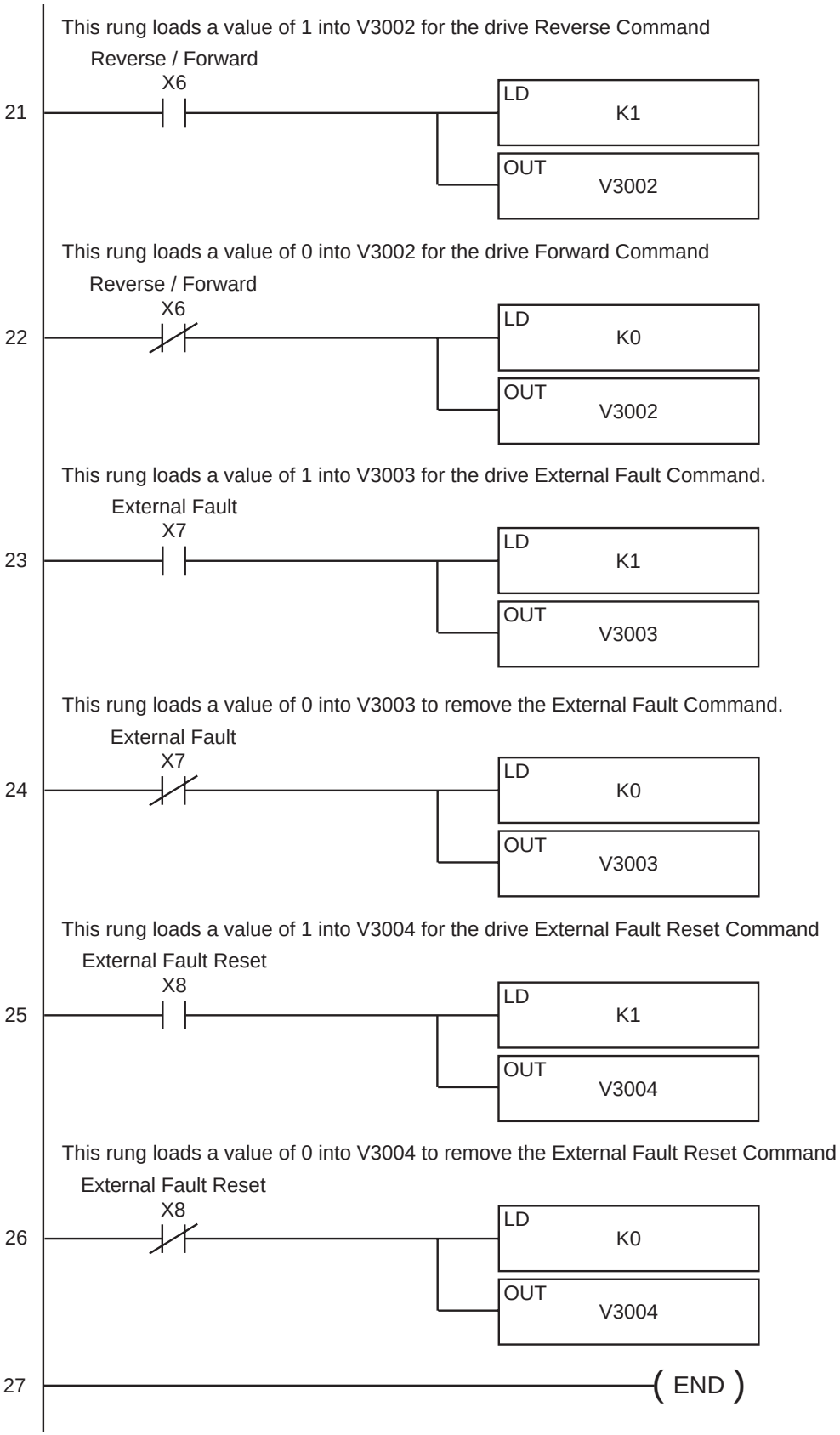

*Direct*LOGIC Modbus Ladder Programming (cont.)

Separate Run Command Write Instruction

Why do we write the Run Command with a separate write instruction? If we write the Run Command to the drive along with the Speed Reference, Direction, External Fault, and Fault Reset Commands, we can keep the parameter addresses in sequence, and we can update all five of the commands with one write instruction. This method is valid **only** if we disable the drive's keypad STOP button (P3.00 = 04).

Typically, the keypad STOP button will be enabled (P3.00 = 03), and we need to prevent a change in one of the other commands from overriding a keypad Stop Command by causing a previous Run Command to be rewritten to the drive. By using a separate Run Command write instruction, only a deliberate Run Command change by the program will run the drive again after a stop.

Block Transfer Parameters

For writing to any of the parameters from P0.00 to P8.01, a group of 15 block transfer parameters (P9.11 to P9.25) is available in the GS2 AC drive. This sequential block of parameters can be used to "group" various miscellaneous non-sequential parameters, so that you can update the parameters in one programming write block instead of having to use multiple WX commands.

For example: If you need to change the PID setpoint (P7.11), accel time (P1.01), and multi-speed 1 (P5.01), this would typically take three different WX commands because the parameters are non-sequential. However, by setting P9.11 to P7.11, P9.12 to P1.01, and P9.13 to P5.01, the parameters become sequential, and can be controlled using one WX command (LD Kf201, LD K6, LDA Oxxxx, WX V4413).

Communicating with Third-party Devices

First you must decide what type of interface will work best for your application. The GS2 RJ-12 Serial Comm Port can accommodate an RS232C or an RS-485 connection.

RS-232C

An RS-232C connection is somewhat limited. The maximum network cable length for an RS-232C connection is 15 meters (50 feet). In addition, using the RS-232C interface will allow you to connect only one AC drive to one Modbus device. For an RS-232C connection, set the GS2 DIP switches SW2 and SW3 to RS232.

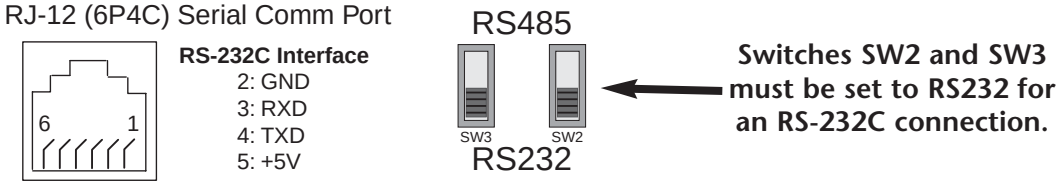

RS-485

An RS-485 network cable can span up to 1000 meters (4000 feet). For an RS-485 connection, set the GS2 DIP switches SW2 and SW3 to RS485.

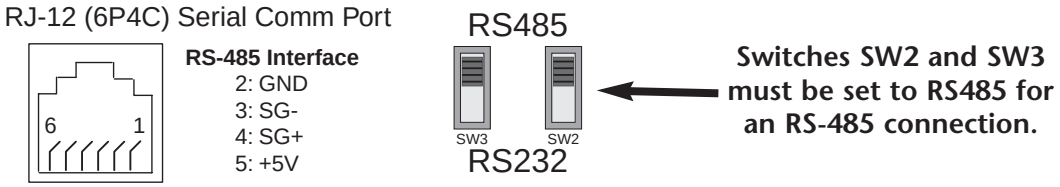

The GS2 Series AC drive communication address is specified by P9.00. The third party device then controls each AC drive according to its communication address.

The GS2 Series AC drive can be setup to communicate on standard Modbus networks using the following transmission modes: ASCII or RTU. Using the Communication Protocol parameter (P9.02), you can select the desired mode, data bits, parity, and stop bits. The mode and serial parameters must be the same for all devices on a Modbus network.

Data Format

ASCII Mode: 10-bit character frame (For 7-bit character):

P9.02 = 00 (7 data bits, no parity, 2 stop bits)

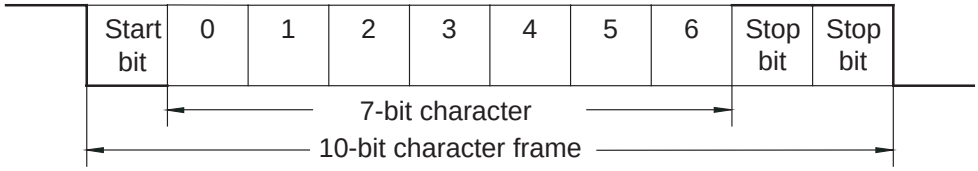

P9.02 = 01 (7 data bits, even parity, 1 stop bit)

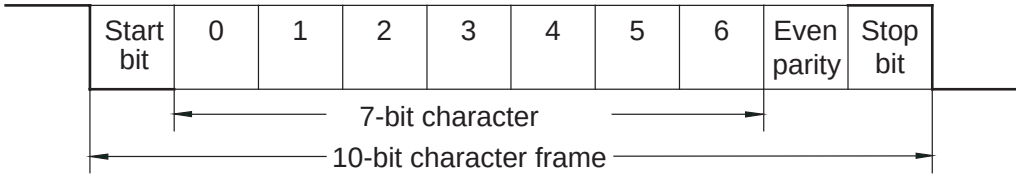

P9.02 = 02 (7 data bits, odd parity, 1 stop bit)

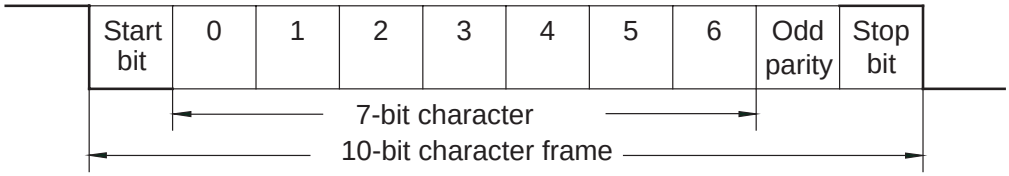

RTU Mode: 11-bit character frame (For 8-bit character):

P9.02 = 03 (8 data bits, no parity, 2 stop bit)

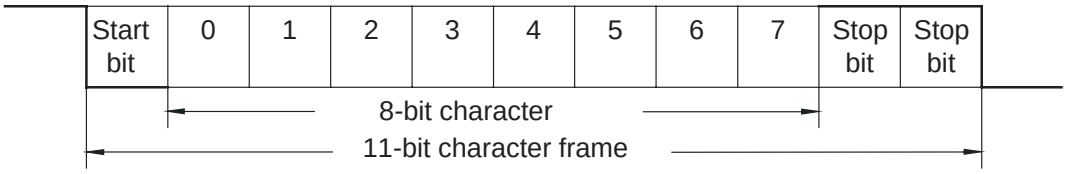

P9.02 = 04 (8 data bits, even parity, 1 stop bit)

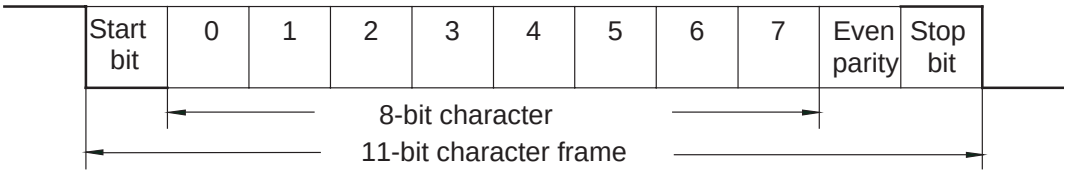

P9.02 = 05 (8 data bits, odd parity, 1 stop bit)

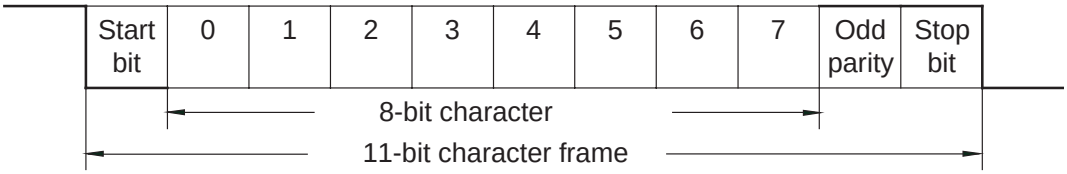

Communication Protocol

ASCII Mode:

STX	Start Character: (3AH)
ADR 1	Communication Address: 8-bit address consists of 2 ASCII codes
ADR 0	
CMD 1	
CMD 0	
DATA (n-1)	Contents of data: n x 8-bit data consists of 2n ASCII codes. n ≤ 25 maximum of 50 ASCII codes
.....	
DATA 0	
LRC CHK 1	LRC check sum: 8-bit check sum consists of 2 ASCII codes
LRC CHK 0	
END 1	END characters: END 1 = CR (0DH), END 0 = LF (0AH)
END-0	

RTU Mode:

START	A silent interval of more than 10 ms
ADR	Communication Address: 8-bit address
CMD	Command Code: 8-bit command
DATA (n-1)	Contents of data: n x 8-bit data, n ≤ 25
.....	
DATA 0	
CRC CHK Low	CRC check sum: 16-bit check sum consists of 2 8-bit characters
CRC CHK High	
END	A silent interval of more than 10 ms

ADR (Communication Address)

Valid communication addresses are in the range of 0 to 254. Communication address equals to 0 means broadcast to all AC drives, in which case the drives will not reply any message to the master device.

For example, communication to AC drive with address 16 decimal:

ASCII mode: (ADR 1, ADR 0)='1','0' => '1'=31H, '0'=30H
RTU mode: (ADR)=10H

CMD (Command code) and DATA (data characters)

The format of data characters depends on the command code. The available command codes are described as followed: Command code: 03H, read N words. The maximum value of N is 12. For example, reading continuous 2 words from starting address 2102H of the AC drive with address 01H.

ASCII mode:

Command Message		Response Message	
STX	':'	STX ':'	':'
ADR 1 ADR 0	'0'	ADR 1 ADR 0	'0'
	'1'		'1'
CMD 1 CMD 0	'0'	CMD 1 CMD 0	'0'
	'3'		'3'
Starting data address	'2'	Number of data (Count by byte)	'0'
	'1'		'4'
	'0'	Content of starting data address 2102H	'1'
	'2'		'7'
Number of data (Count by word)	'0'		'7'
	'0'		'0'
	'0'	Content data address 2103H	'0'
	'2'		'0'
LRC CHK 1 LRC CHK 0	'D'		'0'
	'7'		'0'
END 1 END 0	CR	LRC CHK 1 LRC CHK 0	'7'
	LF		'1'
		END 1 END 0	CR
			LF

RTU mode:

Command Message		Response Message	
ADR	01H	ADR	01H
CMD	03H	CMD	03H
Starting data address	21H	Number of data (Count by byte)	04H
	02H		'0'
Number of data (Count by word)	00H	Content of data address 2102H	17H
	02H		70H
CRC CHK Low CRC CHK High	6FH	Content of data address 2103H	00H
	F7H		02H
		CRC CHK Low CRC CHK High	FEH
			5CH

Command code: 06H, write 1 word

For example, writing 6000(1770H) to address 0100H of the AC drive with address 01H.

ASCII mode:

Command Message		Response Message	
STX	':'	STX ':'	':'
ADR 1 ADR 0	'0'	ADR 1 ADR 0	'0'
	'1'		'1'
CMD 1 CMD 0	'0'	CMD 1 CMD 0	'0'
	'6'		'6'
Data Address	'0'	Data Address	'0'
	'1'		'1'
	'0'		'0'
	'0'		'0'
	'1'	Data Content	'1'
	'7'		'7'
	'7'		'7'
	'0'		'0'
LRC CHK 1 LRC CHK 0	'7'	LRC CHK 1 LRC CHK 0	'7'
	'1'		'1'
END 1 END 0	CR	END 1 END 0	CR
	LF		LF

RTU mode:

This is an example of using function code 16 for writing to multiple registers.

Command Message		Response Message	
ADR	01H	ADR	01H
CMD	10H	CMD	10H
Starting data address	20H	Starting data address	20H
	00H		00H
Number of registers	00H	Number of data (Count by word)	00H
	02H		02H
Byte count	04H	CRC CHK Low CRC CHK High	4AH
Content of data address 2000H	00H		08H
	02H		
Content of data address 2001H	02H		
	58H		
CRC CHK Low CRC CHK High	CBH		
	34H		

CHK (check sum)

ASCII Mode:

LRC (Longitudinal Redundancy Check) is calculated by summing up module 256, the values of the bytes from ADR1 to last data character then calculating the hexadecimal representation of the 2's-complement negation of the sum.

For example, reading 1 word from address 0401H of the AC drive with address 01H.

Command Message	
STX	':'
ADR 1 ADR 0	'0' '1'
CMD 1 CMD 0	'0' '3'
Starting data address	'0' '4' '0' '1'
Number of data (Count by word)	'0' '0' '0' '1'
LRC CHK 1 LRC CHK 0	'F' '6'
END 1 END 0	CR LF

01H+03H+04H+01H+00H+01H=0AH;
the 2's complement negation of 0AH is F6H.

RTU Mode:

Response Message	
ADR	01H
CMD	03H
Starting data address	21H 02H
Number of data (Count by word)	00H 02H
CRC CHK Low CRC CHK High	6FH F7H

CRC (Cyclical Redundancy Check) is calculated by the following steps:

Step 1: Load a 16-bit register (called CRC register) with FFFFH.

Step 2: Exclusive OR the first 8-bit byte of the command message with the low order byte of the 16-bit CRC register, putting the result in the CRC register.

Step 3: Shift the CRC register one bit to the right with MSB zero filling. Extract and examine the LSB.

Step 4: If the LSB of CRC register is 0, repeat step 3; else Exclusive OR the CRC register with the polynomial value A001H.

Step 5: Repeat step 3 and 4 until eight shifts have been performed. When this is done, a complete 8-bit byte will have been processed.

Step 6: Repeat steps 2 to 5 for the next 8-bit byte of the command message.

Continue doing this until all bytes have been processed. The final contents of the CRC register are the CRC value.

Note: When transmitting the CRC value in the message, the upper and lower bytes of the CRC value must be swapped, i.e. the lower order byte will be transmitted first.

The following is an example of CRC generation using C language. The function takes two arguments:

Unsigned char* data ← a pointer to the message buffer
Unsigned char length ← the quantity of bytes in the message buffer

The function returns the CRC value as a type of unsigned integer.

```
Unsigned int crc_chk(unsigned char* data, unsigned char length){
 int j;
 unsigned int reg_crc=0xFFFF;
 while(length--){
   reg_crc ^= *data++;
   for(j=0;j<8;j++){
     if(reg_crc & 0x01){  /* LSB(b0)=1 */
        reg_crc=(reg_crc>>1) ^ 0xA001;
    }else{
        reg_crc=reg_crc >>1;
    }
   }
 }
 return reg_crc;
}
```

CHAPTER 6

MAINTENANCE AND TROUBLESHOOTING

In This Chapter...

Maintenance and Inspection 6–2

Monthly Inspection: 6–2

Annual Inspection 6–2

Troubleshooting 6–3

Fault Codes 6–3

Warning Messages 6–6

Maintenance and Inspection

Modern AC drives are based on solid state electronics technology. Preventive maintenance is required to operate the AC drive in its optimal condition, and to ensure a long life. It is recommended that a qualified technician perform a regular inspection of the AC drive. Some items should be checked once a month, and some items should be checked yearly. Before the inspection, always turn off the AC Input Power to the unit. Wait at least 2 minutes after all display lamps have turned off, and then confirm that the capacitors have fully discharged by measuring the voltage between B1 and Frame Ground using a multimeter set to measure DC voltage.

WARNING! Disconnect AC power and ensure that the internal capacitors have fully discharged before inspecting the AC drive!

Monthly Inspection:

Check the following items at least once a month.

1. Make sure the motors are operating as expected.
2. Make sure the installation environment is normal.
3. Make sure the cooling system is operating as expected.
4. Check for irregular vibrations or sounds during operation.
5. Make sure the motors are not overheating during operation.
6. Check the input voltage of the AC drive and make sure the voltage is within the operating range. Check the voltage with a voltmeter.

Annual Inspection

Check the following items once annually.

1. Tighten and reinforce the screws of the AC drive if necessary. They may loosen due to vibration or changing temperatures.
2. Make sure the conductors and insulators are not corroded and damaged.
3. Check the resistance of the insulation with mega-ohm meter.
4. Check the capacitors and relays; may require qualified repair shop to replace any defective components. Drive components are NOT field serviceable or replaceable.
5. Clean off any dust and dirt with a vacuum cleaner. Pay special attention to cleaning the ventilation ports, heat sinks, and PCBs. Always keep these areas clean. Accumulation of dust and dirt in these areas can cause unforeseen failures.

If the AC drive is not used for a long period of time, turn the power on at least once every two years and confirm that it still functions properly. To confirm functionality, disconnect the motor and energize the AC drive for 5 hours or more before attempting to run a motor with it.

Troubleshooting

Fault Codes

The AC drive has a comprehensive fault diagnostic system that includes several different alarms and fault messages. Once a fault is detected, the corresponding protective functions will be activated. The fault codes are then displayed on the digital keypad display. The six most recent faults can be read on the digital keypad display by viewing P6.31 to P6.36.

NOTE: Faults can be cleared by a reset from the keypad or input terminal.

Fault Codes		
Fault Name	**Fault Descriptions**	**Corrective Actions**
oc	The AC drive detects an abnormal increase in current.	1. Check whether the motor's horsepower corresponds to the AC drive output power. 2. Check the wiring connections between the AC drive and motor for possible short circuits. 3. Increase the Acceleration time (1-01 or 1-05). 4. Check for possible excessive loading conditions at the motor. 5. If there are any abnormal conditions when operating the AC drive after short-circuit is removed, the AC drive should be sent back to the manufacturer.
ou	The AC drive detects that the DC bus voltage has exceeded its maximum allowable value.	1. Check whether the input voltage falls within the rated AC drive input voltage. 2. Check for possible voltage transients. 3. Bus over-voltage may also be caused by motor regeneration. Either increase the decel time or add an optional braking resistor. 4. Check whether the required braking power is within the specified limits.
oH	The AC drive temperature sensor detects excessive heat.	1. Ensure that the ambient temperature falls within the specified temperature range. 2. Make sure that the ventilation holes are not obstructed. 3. Remove any foreign objects on the heat sinks and check for possible dirty heat sink fins. 4. Provide enough spacing for adequate ventilation.
Lu	The AC drive detects that the DC bus voltage has fallen below its minimum value.	Check whether the input voltage falls within the AC drive's rated input voltage.
oL	The AC drive detects excessive drive output current. Note: The AC drive can withstand up to 150% of the rated current for a maximum of 60 seconds.	1. Check whether the motor is overloaded. 2. Reduce torque compensation setting as set in 2-03. 3. Increase the AC drive's output capacity.

Fault Codes		
Fault Name	**Fault Descriptions**	**Corrective Actions**
oL1	Internal electronic overload trip	1. Check for possible motor overload. 2. Check electronic thermal overload setting. 3. Increase motor capacity. 4. Reduce the current level so that the AC drive output current does not exceed the value set by the Motor Rated Current 0-01.
oL2	Motor overload. Check the parameter settings (6-07 to 6-09)	1. Reduce the motor load. 2. Adjust the over-torque detection setting to an appropriate level.
ocA	Over-current during acceleration: 1. Short-circuit at motor output. 2. Torque boost too high. 3. Acceleration time too short. 4. AC drive output capacity is too small.	1. Check for possible poor insulation at the output line. 2. Decrease the torque boost setting in 2-03. 3. Increase the acceleration time. 4. Replace the AC drive with one that has a higher output capacity (next HP size).
ocd	Over-current during deceleration 1. Short-circuit at motor output. 2. Deceleration time too short. 3. AC drive output capacity is too small.	1. Check for possible poor insulation at the output line. 2. Increase the deceleration time. 3. Replace the AC drive with one that has a higher output capacity (next HP size).
ocn	Over-current during steady state operation: 1. Short-circuit at motor output. 2. Sudden increase in motor loading. 3. AC drive output capacity is too small.	1. Check for possible poor insulation at the output line. 2. Check for possible motor stall. 3. Replace the AC drive with one that has a higher output capacity (next HP size).
cF1	Internal memory IC cannot be programmed.	1. Switch off power supply. 2. Check whether the input voltage falls within the AC drive's rated input voltage. 3. Switch the AC drive back on.
cF2	Internal memory IC can not be read.	1. Check the connections between the main control board and the power board. 2. Reset drive to factory defaults.
HPF	Hardware protection failure	Return to the factory.
codE	Software protection failure	Return to the factory.
cF3	AC Drive's internal circuitry abnormal	1. Switch off power supply. 2. Check whether the input voltage falls within the rated AC drive input voltage. Switch on the AC drive.
EF	DI terminal EF-CM goes from OFF to ON, or 4-20mA AI signal is lost	Remove EF-CM N.O. signal, restore EF-CM N.C. signal, or restore 4-20mA AI signal.
cFA	Auto accel/decel failure	Don't use the function of auto acceleration/ deceleration.

Fault Codes		
Fault Name	**Fault Descriptions**	**Corrective Actions**
GFF	Ground fault : The AC drive output is abnormal. When the output terminal is grounded (short circuit current is 50% more than the AC drive rated current), the AC drive power module may be damaged. The short circuit protection is provided for AC drive protection, not user protection.	Ground fault : 1. Check whether the IGBT power module is damaged. 2. Check for possible poor insulation at the output line.
bb	External Base Block: AC drive output is turned off.	1. When the external input terminal (base-block) is active, the AC drive output will be turned off. 2. Disable this connection and the AC drive will begin to work again.
PhL	Input Power 3 phase loss: One phase of the input power is lost.	1. Check for possible poor connection on the input power line. 2. Check for possible loss of phase on input power line.

Warning Messages

There are several Warning Messages that a GS2 AC Drive may give. The GS2 AC Drive allows you to decide its response to these messages. The descriptions of the Warning Messages are listed below.

Warning Messages		
Warning Name	**Warning Descriptions**	**Corrective Actions**
CE01	Communications Warning: Illegal command code - The command code received in the command message is not available for the AC drive.	The corrective action can be set with the Transmission Fault Treatment parameter (9-03). The available settings are: 0 - Display fault and continue operating 1 - Display fault and RAMP to stop 2 - Display fault and COAST to stop 3 - No fault displayed and continue operating The default setting is 0.
CE02	Communications Warning: Illegal data address - The data address received in the command message is not available for the AC drive.	
CE03	Communications Warning: Illegal data value - The data value received in the command message is not available for the AC drive.	
CE04	Communications Warning: Slave device failure - The AC drive is unable to perform the requested action.	
CE 10	Communications Warning: Communication Time Out	
FbE	PID Warning: PID Feedback Loss - The 4-20mA PID signal has been lost.	The corrective action can be set with the PID Feedback Loss parameter (P7.27). The available settings are: 00 - Warn and AC Drive Stop 01 - Warn and Continue The default setting is 00.

Appendix A

Accessories

In This Appendix...

Accessories Part Numbering A–2
Line Reactors A–2
- Line Reactor Dimensions A–4
- Line Reactor Applications and Connections A–5

Braking Resistors A–8
- Braking Resistor Connections A–8
- Braking Resistor Dimensions A–9

EMI Input Filters A–10
- EMI Filter Dimensions A–11
- EMI Filter Connections A–15

RF Filters A–16
Fuses and Fuse Kits A–17
- Fuses and Fuse Kits Dimensions A–18

GS-EDRV Ethernet Interface A–20
GS Drive Configuration Software A–22
- System Requirements A–22
- Software Configuration Methods A–22

Miscellaneous Accessories A–25
- Configuration Cable A–25
- Spare Keypad A–25
- Keypad Cables A–25
- Communication Distribution Blocks A–26

Accessories Part Numbering

With the exception of EMI Filters, RF Filters, and some Line Reactors, GS2 Series accessory part numbers incorporate the part numbers of the AC Drives for which they are compatible. Each accessory part number begins with the AC Drive series and rating. This is followed by an accessory code, and, when applicable, a description code. The accessory part numbering scheme is shown below.

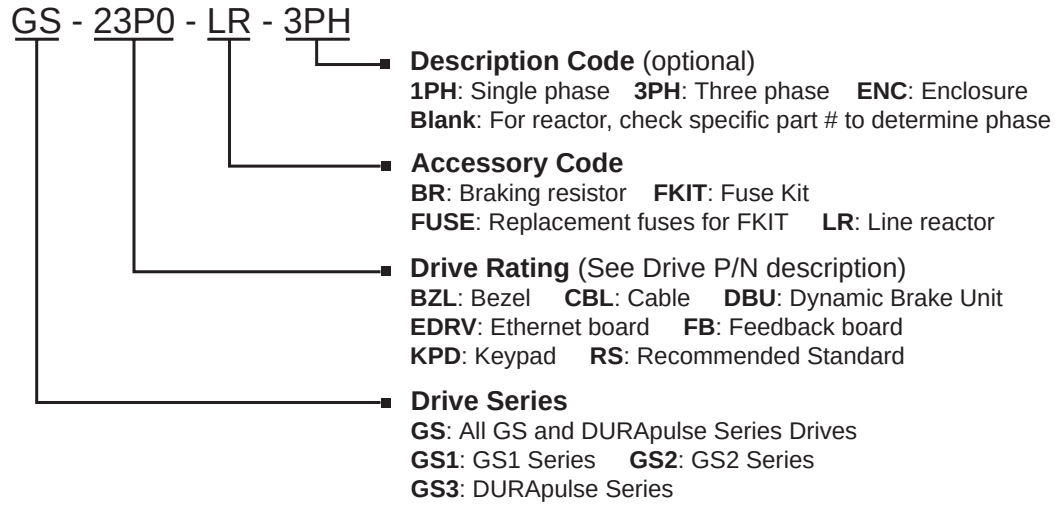

Line Reactors

Input line reactors protect the AC drive from transient overvoltage conditions typically caused by utility capacitor switching. Input line reactors also reduce the harmonics associated with AC drives, and are recommended for all installations.

Output line (load) reactors protect the motor insulation against AC drive short circuits and IGBT reflective wave damage, and also allow the motor to run cooler by "smoothing" the motor current waveform. They are recommended for operating "non-inverter-duty" motors, and for any motors when the length of wiring between the AC drive and motor exceeds 75 feet.

115V Single Phase Input Line Reactors*						
Part Number	**Rated Amps**	**Impedance**	**Inductance**	**Watt Loss**	**GS2 Drive Model and Side / Phase / Volts**	**Drive hp**
GS-10P2-LR	18	3%	0.80 mH	19	GS2-10P2 (input) / 1ph / 115V	0.25
GS-10P5-LR	25	3%	0.50 mH	23	GS2-10P5 (input) / 1ph / 115V	0.5
GS-11P0-LR	35	3%	0.40 mH	36	GS2-11P0 (input) / 1ph / 115V	1
***NOTE: Single phase line reactors should NOT be installed on the output side of the AC drive.**						

Line Reactors (continued)

230V Single Phase Input Line Reactors*						
Part Number	Rated Amps	Impedance	Inductance	Watt Loss	GS2 Drive Model and Side / Phase / Volts	Drive hp
GS-20P5-LR-1PH	8	3%	6.50 mH	13	GS2-20P5 (input) / 1ph / 230V	0.5
GS-21P0-LR-1PH	12	3%	6.50 mH	13	GS2-21P0 (input) / 1ph / 230V	1
GS-22P0-LR-1PH	18	3%	3.00 mH	25	GS2-22P0 (input) / 1ph / 230V	2
GS-23P0-LR-1PH	35	3%	2.50 mH	26	GS2-23P0 (input) / 1ph / 230V	3
***NOTE: Single phase line reactors should NOT be installed on the output side of the AC drive.**						

230V Three Phase Input / Output Line Reactors						
Part Number	Rated Amps	Impedance	Inductance	Watt Loss	GS2 Drive Model and Side / Phase / Volts	Drive hp
GS-20P5-LR-3PH	4	3%	6.50 mH	13	GS2-20P5 (in/out) / 3ph / 230V	0.5
GS-21P0-LR-3PH	4	3%	3.00 mH	7	GS2-21P0 (in/out) / 3ph / 230V	1
GS-22P0-LR-3PH	8	3%	1.50 mH	11	GS2-22P0 (in/out) / 3ph / 230V	2
GS-23P0-LR-3PH	12	3%	1.30 mH	23	GS2-23P0 (in/out) / 3ph / 230V	3
GS-25P0-LR	18	3%	0.80 mH	19	GS2-25P0 (in/out) / 3ph / 230V	5
GS-27P5-LR	25	3%	0.50 mH	23	GS2-27P5 (in/out) / 3ph / 230V	7.5

460V & 575V Three Phase Input / Output Line Reactors						
Part Number	Rated Amps	Impedance	Inductance	Watt Loss	GS2 Drive Model and Side / Phase / Volts	Drive hp
GS-41P0-LR	2	3%	12.0 mH	7	GS2-41P0 (in/out) / 3ph / 460V	1
GS-42P0-LR	4	3%	6.50 mH	13	GS2-42P0 (in/out) / 3ph / 460V GS2-53P0 (in/out) / 3ph / 575V	2 3
GS-43P0-LR	8	3%	5.00 mH	31	GS2-43P0 (in/out) / 3ph / 460V GS2-55P0 (in/out) / 3ph / 575V	3 5
GS-45P0-LR	8	3%	3.00 mH	25	GS2-45P0 (in/out) / 3ph / 460V	5
GS-47P5-LR	12	3%	2.50 mH	26	GS2-47P5 (in/out) / 3ph / 460V GS2-57P5 (in/out) / 3ph / 575V GS2-5010 (in/out) / 3ph / 575V	7.5 7.5 10
GS-4010-LR	18	3%	1.50 mH	29	GS2-4010 (in/out) / 3ph / 460V	10
GS-51P0-LR	2	3%	20.0 mH	9	GS2-51P0 (in/out) / 3ph / 575V	1
GS-52P0-LR	4	3%	9.10 mH	15	GS2-52P0 (in/out) / 3ph / 575V	2

Line Reactor Dimensions

AC Line Reactor Dimensions (inches)							
Part Number	H	W	D	Mtg. D	Mtg. W	Mtg Slot Hole Size	Weight (lbs)
GS-10P2-LR	4.80	6.00	3.30	2.09	2.00	0.28 x 0.63	7
GS-10P5-LR	5.70	6.00	3.09	2.09	3.00	0.28 x 0.63	7
GS-11P0-LR	5.70	6.00	3.34	2.34	3.00	0.28 x 0.63	9
GS-20P5-LR-1PH	3.40	4.40	2.83	1.77	1.44	0.28 x 0.63	2.80
GS-20P5-LR-3PH	3.40	4.40	2.83	1.77	1.44	0.28 x 0.63	2.80
GS-21P0-LR-1PH	3.40	4.40	2.83	1.77	1.44	0.28 x 0.63	2.80
GS-21P0-LR-3PH	3.40	4.40	2.83	1.77	1.44	0.28 x 0.63	2.30
GS-22P0-LR-1PH	3.40	4.40	2.83	1.77	2.00	0.28 x 0.63	3.10
GS-22P0-LR-3PH	3.40	4.40	2.83	1.77	2.00	0.28 x 0.63	2.80
GS-23P0-LR-1PH	4.80	6.00	3.30	2.09	2.00	0.28 x 0.63	7.50
GS-23P0-LR-3PH	3.40	4.40	2.83	1.77	2.00	0.28 x 0.63	2.90
GS-25P0-LR	4.80	6.00	3.30	2.09	2.00	0.28 x 0.63	7.10
GS-27P5-LR	5.70	6.00	3.09	2.09	3.00	0.28 x 0.63	7.00
GS-41P0-LR	3.40	4.40	2.83	1.77	1.44	0.28 x 0.63	2.30
GS-42P0-LR	3.40	4.40	2.83	1.77	1.44	0.28 x 0.63	2.80
GS-43P0-LR	3.40	4.40	3.39	2.39	2.00	0.28 x 0.63	4.30
GS-45P0-LR	3.40	4.40	2.83	1.77	2.00	0.28 x 0.63	3.10
GS-47P5-LR	4.80	6.00	3.30	2.09	2.00	0.28 x 0.63	7.50
GS-4010-LR	4.80	6.30	3.55	2.34	2.00	0.28 x 0.63	9.10
GS-51P0-LR	3.40	4.40	2.83	1.77	1.44	0.28 x 0.63	3
GS-52P0-LR	3.40	4.40	3.33	2.37	1.44	0.28 x 0.63	3

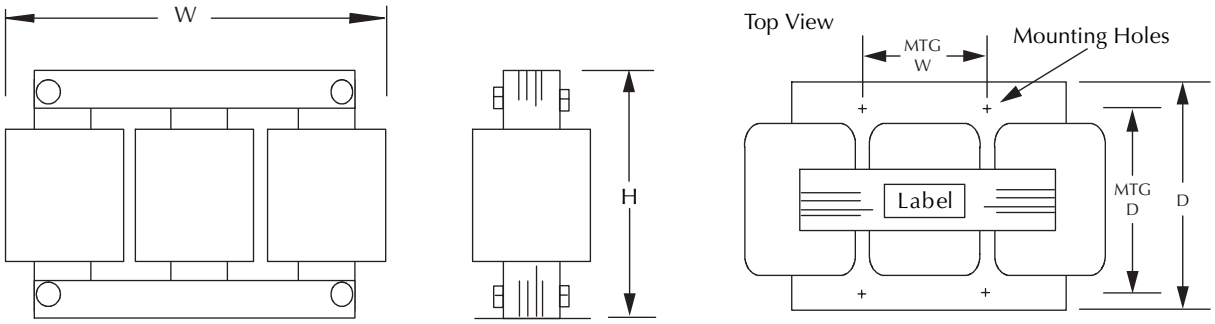

AC Line Reactor Dimensions

Line Reactor Applications and Connections

Input Side of AC Drive

When installed on the input side of the AC Drive, line reactors will reduce line notching, and limit current and voltage spikes and surges from the incoming line. The line reactors will also reduce harmonic distortion from the AC Drive onto the line. Units are installed in front of the AC Drive as shown.

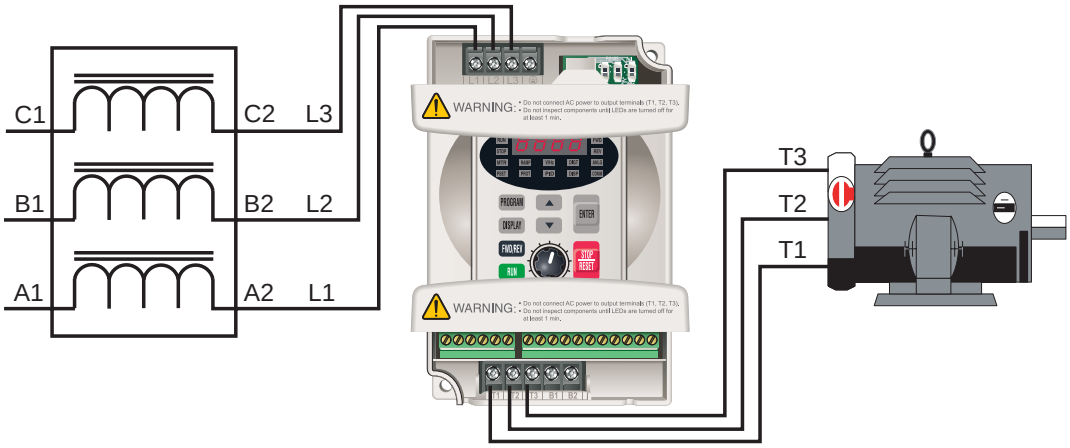

Output Side of AC Drive

When installed on the output side of the AC Drive, line reactors protect the drive from short circuits at the load. Voltage and current waveforms from the drive are enhanced, reducing motor overheating and noise emissions.

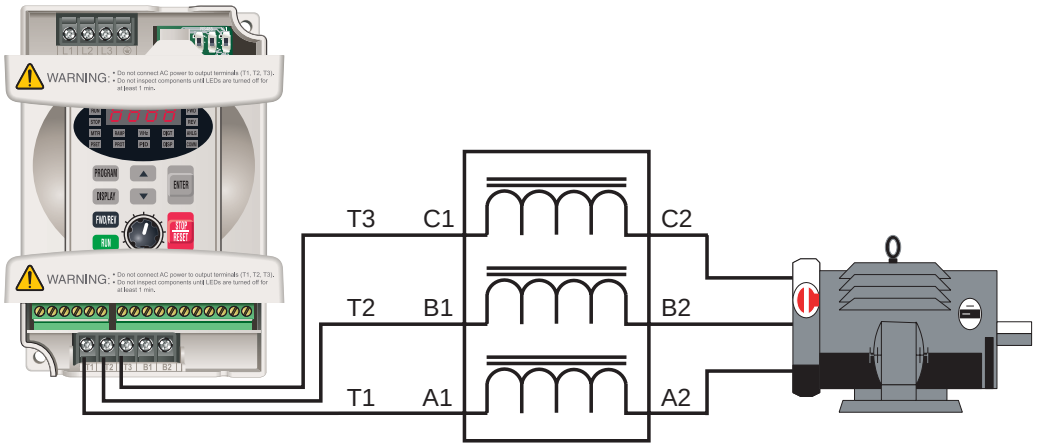

Single-phase line reactors should NOT be installed on the output of the AC Drive. Use only three-phase reactors on drive outputs.

Line Reactor Applications and Connections (continued)

Multiple AC Drives

Individual line reactors are recommended when installing multiple AC Drives on the same power line. Individual line reactors eliminate cross-talk between multiple drives, and provide isolated protection for each drive for its own specific load.

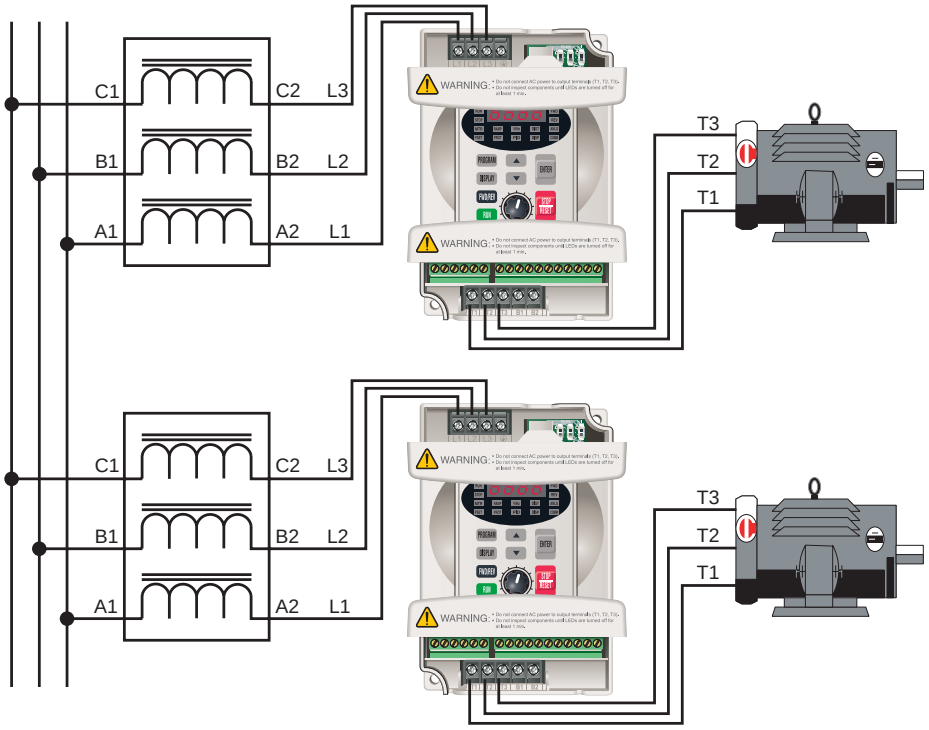

Multiple Motors

A single reactor can be used when the application calls for multiple motors on the same AC Drive, if the motors operate simultaneously. The reactor is sized based on the total horsepower of all the motors. **Overload relays** (not shown) are recommended for use in multi-motor applications.

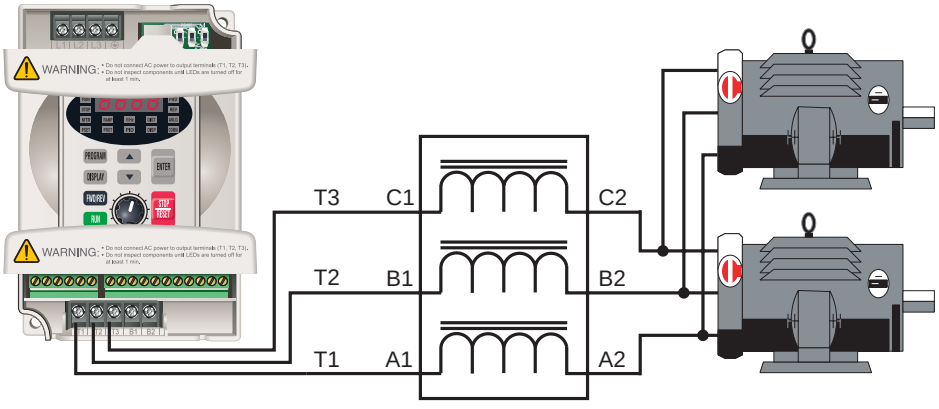

A single reactor should be used with multiple motors ONLY when the motors will operate simultaneously. OVERLOAD RELAYS are recommended for use in multiple motor applications.

Line Reactor Applications and Connections (continued)

Single-Phase Applications

Some of the line reactors are listed for use with single-phase input power. Follow the connection diagram shown below. Make sure that terminals B1 and B2 are properly insulated before any connections are made.

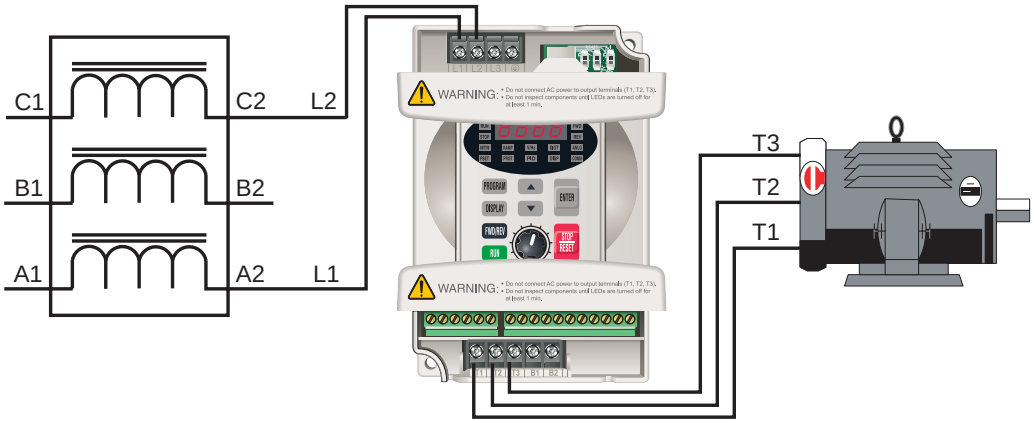

WARNING: Please ensure that you properly insulate terminals B1 and B2 before making any connections to single-phase power.

Braking Resistors

Braking resistors are used to increase the control torque of the AC Drive, for frequently repeated ON-OFF cycles of the AC Drive, or for decelerating a load with large inertia.

The use of braking resistors with GS2 Series AC drives requires no parameter setup. The AC drive automatically senses the presence of braking resistors.

Braking Resistor Specifications						
Part Number	Quantity & Wiring	Drive Model	Braking Torque	Ohms	Watts	Duty Cycle
GS-20P5-BR	1	GS2-10P2, GS2-10P5, GS2-20P5	270%	200Ω	80	10%
GS-21P0-BR	1	GS2-11P0, GS2-21P0	125%	200Ω	80	10%
GS-22P0-BR	1	GS2-22P0	125%	100Ω	300	10%
GS-23P0-BR	1	GS2-23P0	125%	70Ω	300	10%
GS-25P0-BR	1	GS2-25P0	125%	40Ω	400	10%
GS-27P5-BR	1	GS2-27P5	125%	30Ω	500	10%
GS-41P0-BR	1	GS2-41P0	125%	750Ω	80	10%
GS-42P0-BR	1	GS2-42P0, GS2-51P0, GS2-52P0	125%	400Ω	300	10%
	2 in parallel	GS2-53P0, GS2-55P0, GS2-57P5				
GS-43P0-BR	1	GS2-43P0	125%	250Ω	300	10%
GS-45P0-BR	1	GS2-45P0	125%	150Ω	400	10%
GS-47P5-BR	1	GS2-47P5	125%	100Ω	500	10%
GS-4010-BR	1	GS2-4010	125%	75Ω	1000	10%
	2 in series	GS2-5010				

Braking Resistor Connections

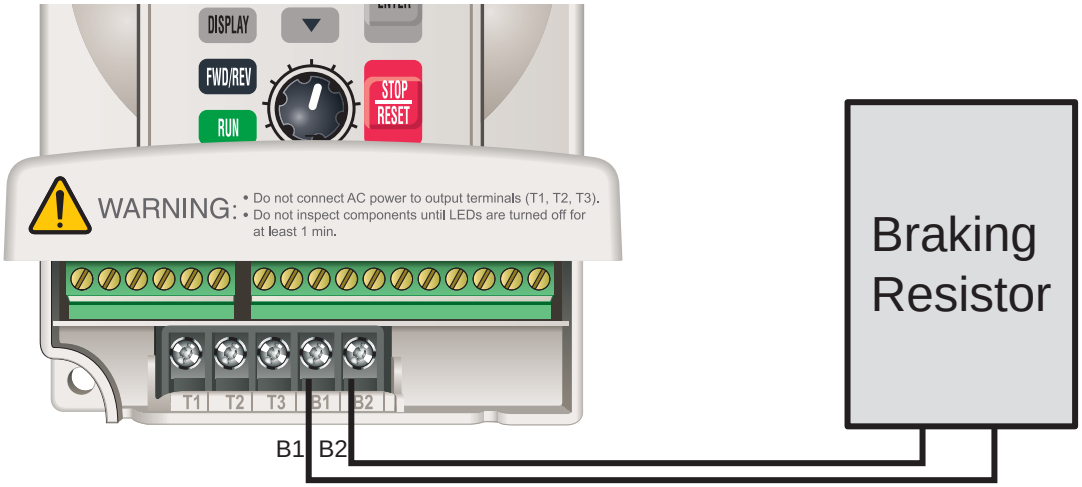

Braking Resistor Dimensions

Braking Resistor Dimensions (mm)							
Part Number	Figure	L1	L2	H	D	W	Maximum weight (g)
GS-20P5-BR	1	140	125	20	5.3	60	160
GS-21P0-BR	1	140	125	20	5.3	60	160
GS-22P0-BR	1	215	200	30	5.3	60	750
GS-23P0-BR	1	215	200	30	5.3	60	750
GS-25P0-BR	1	265	250	30	5.3	60	930
GS-27P5-BR	2	335	320	30	5.3	60	1100
GS-41P0-BR	1	140	125	20	5.3	60	160
GS-42P0-BR	1	215	200	30	5.3	60	750
GS-43P0-BR	1	215	200	30	5.3	60	750
GS-45P0-BR	1	265	250	30	5.3	60	930
GS-47P5-BR	2	335	320	30	5.3	60	1100
GS-4010-BR	2	400	385	50	5.3	100	2800

Figure 1

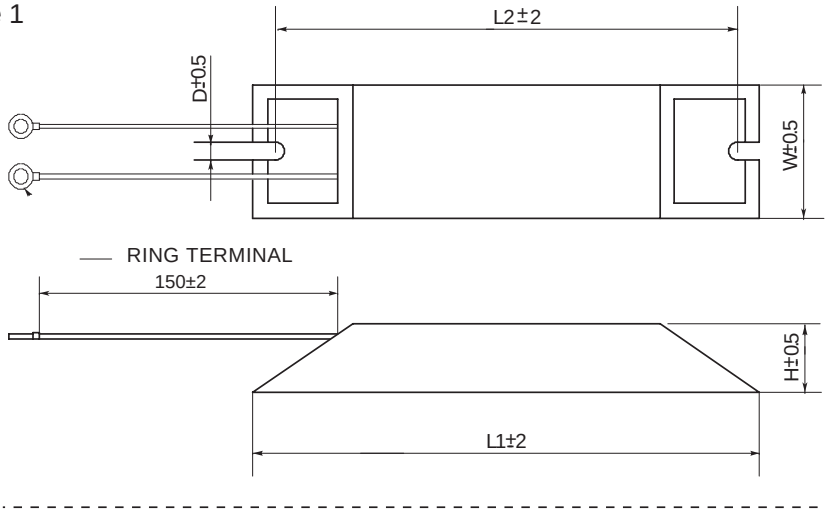

Figure 2

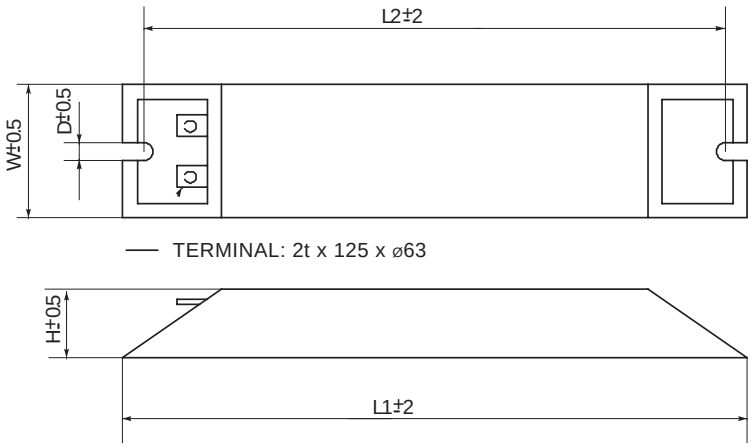

EMI Input Filters

The EC Declaration of Conformity for the GS2 Series AC Drives was completed in conjunction with EMI Filters listed below.

CE compliance requires the use of EMI filters; not available for 575V drives.

EMI Input Filter Specifications			
EMI Filter	**AC Drive Model / Input Phase**	**Filter Input Rating**	**Filter Dimensions**
20DRT1W3S	GS2-10P2 / 1ph GS2-10P5 / 1ph GS2-11P0 / 1ph GS2-20P5 / 1ph GS2-21P0 / 1ph GS2-22P0 / 1ph	250V, 1-phase, 20A	Figure 1
32DRT1W3C	GS2-23P0 / 1ph	250V, 1-phase, 32A	Figure 2
not available	GS2-20P5 / 3ph	n/a	
10TDT1W4C *	GS2-21P0 / 3ph GS2-22P0 / 3ph	250V, 3-phase, 10A	Figure 3
26TDT1W4C *	GS2-23P0 / 3ph	250V, 3-phase, 26A	Figure 4
40TDS4W4B	GS2-25P0 / 3ph GS2-27P5 / 3ph	250V, 3-phase, 40A	Figure 5
11TDT1W4S	GS2-41P0 / 3ph GS2-42P0 / 3ph GS2-43P0 / 3ph	480V, 3-phase, 11A	Figure 6
17TDT1W44	GS2-45P0 / 3ph GS2-47P5 / 3ph	480V, 3-phase, 17A	Figure 7
26TDT1W4B4	GS2-4010 / 3ph	480V, 3-phase, 26A	Figure 8
not available	GS2-5xxx	n/a	

**** EMI filters 10TDT1W4C and 26TDT1W4C do not mount underneath GS2 drives.***

EMI Filter Dimensions

These filters, except 10TDT1W4C and 26TDT1W4C, mount between the drive and the sub-panel. The filters have threaded holes on their front surface for this purpose, and the drives mount directly to the front of the filters.

Figure 1 [units = mm]

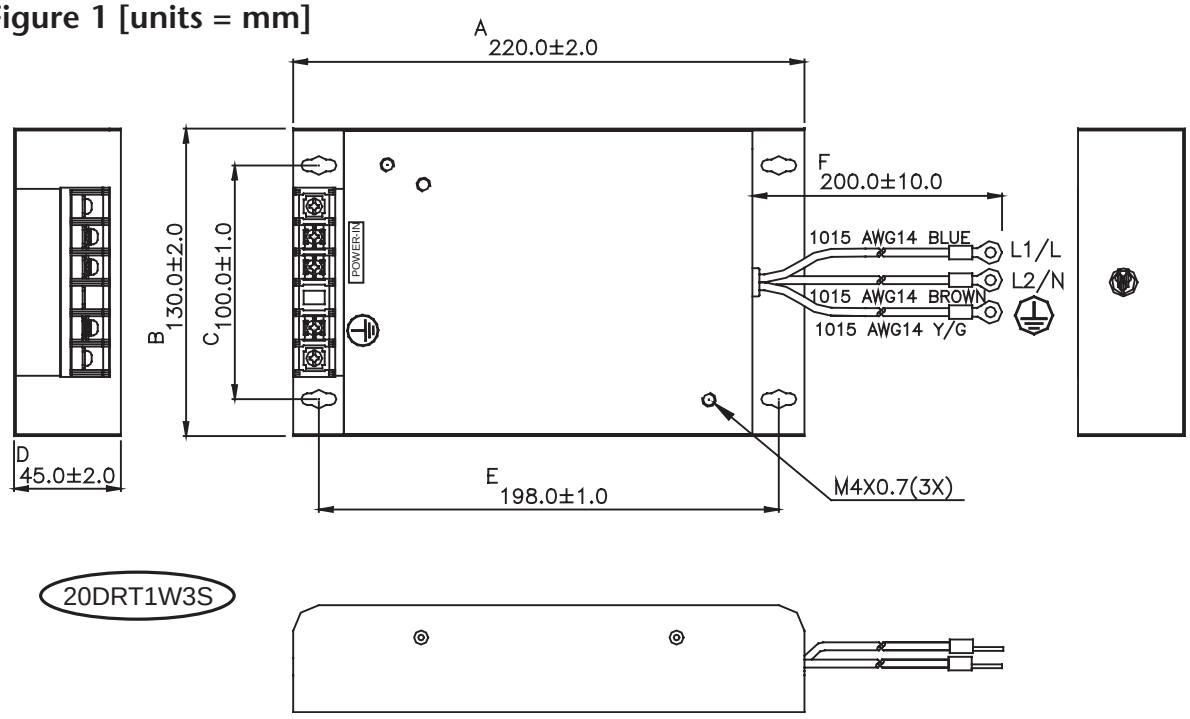

Figure 2 [units = mm]

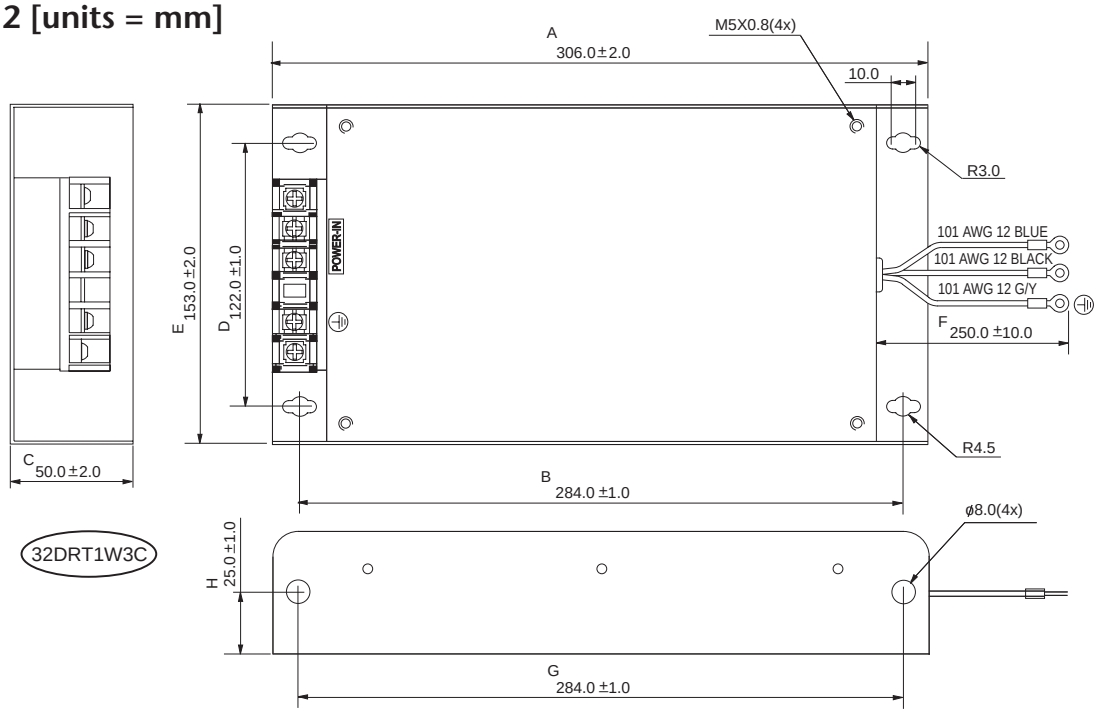

EMI Filter Dimensions (continued)

Figure 3 [units = mm (in)]

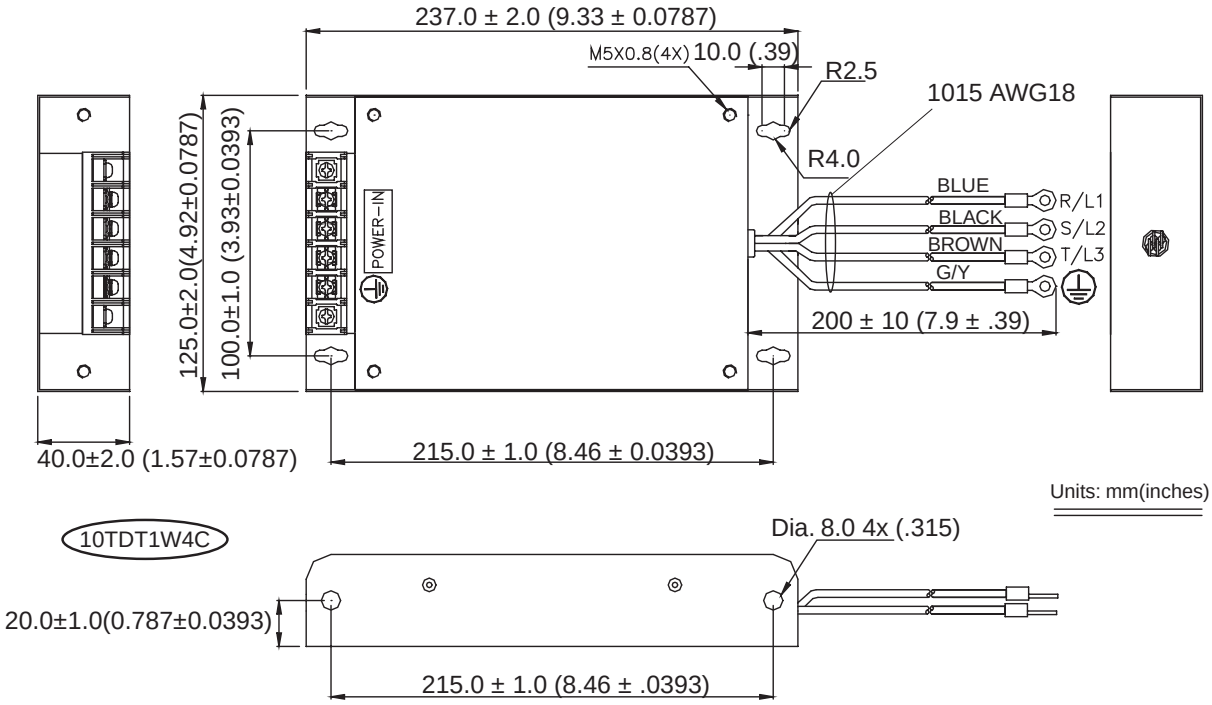

Figure 4 [units = mm (in)]

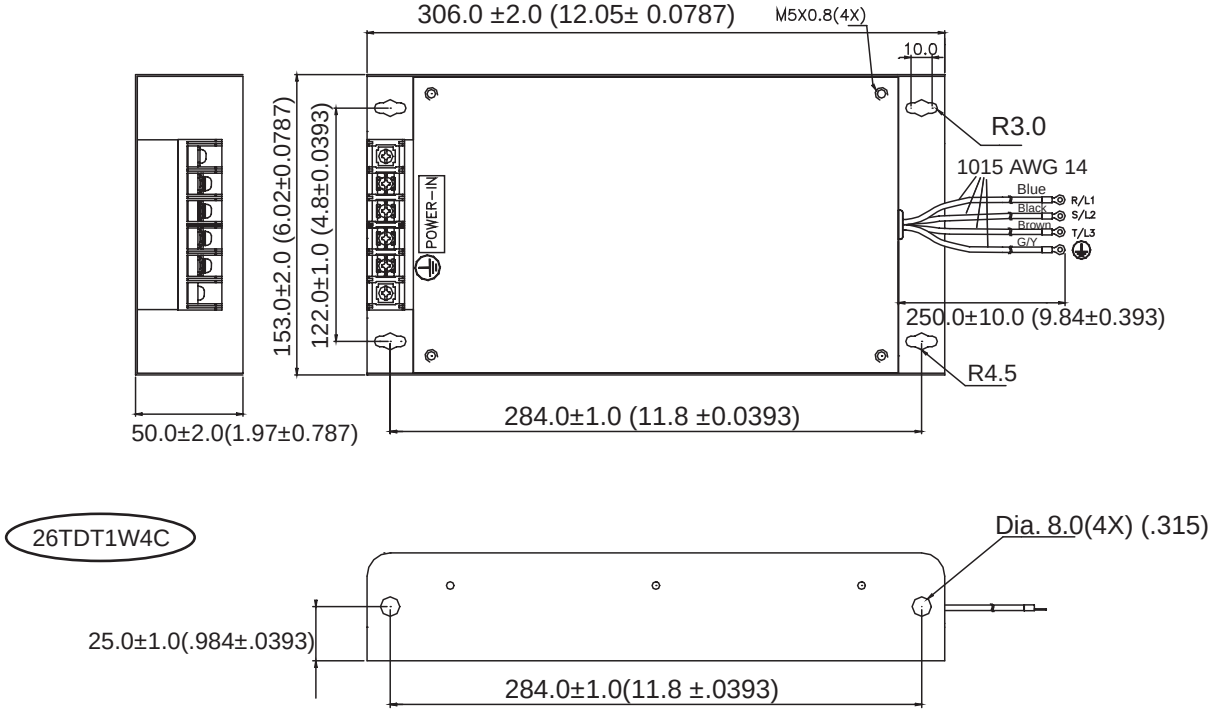

EMI Filter Dimensions (continued)

Figure 5 [units = mm]

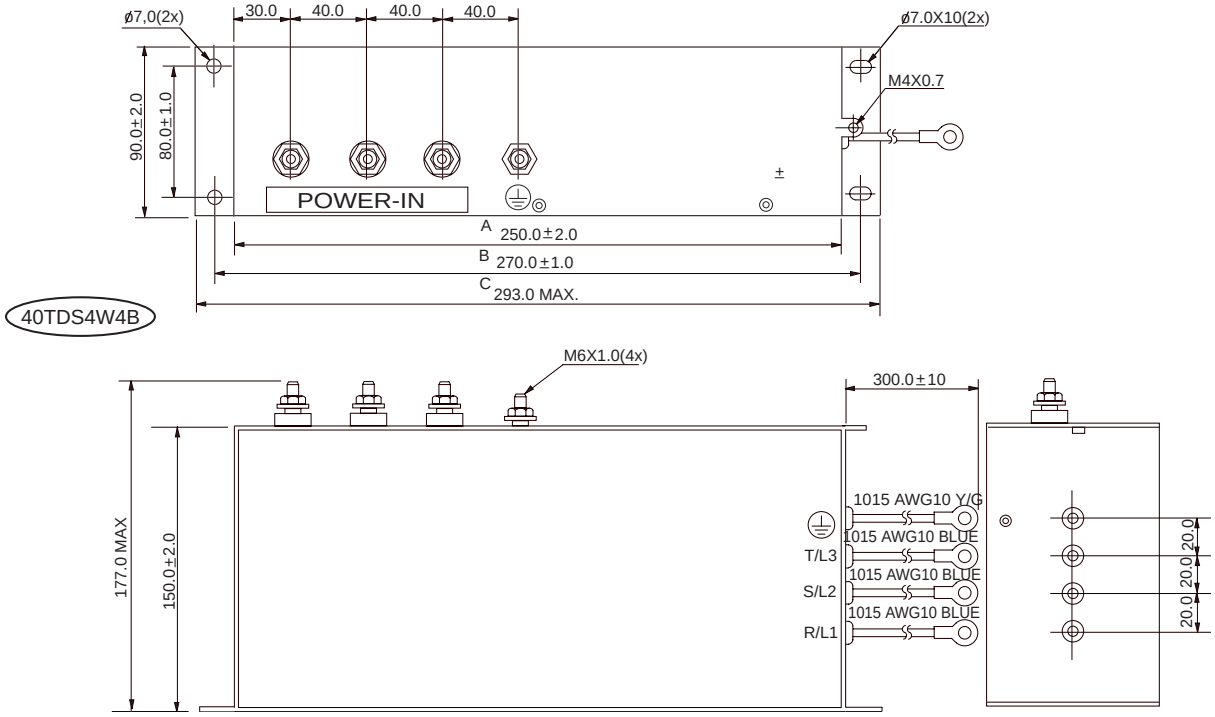

Figure 6 [units = mm]

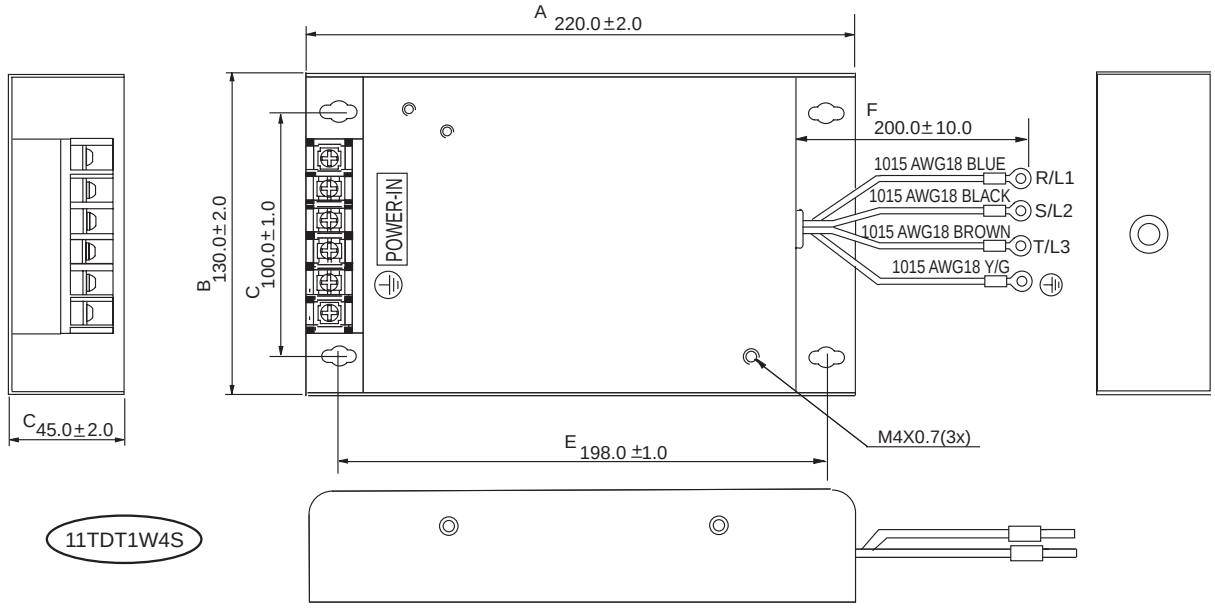

EMI Filter Dimensions (continued)

Figure 7 [units = mm]

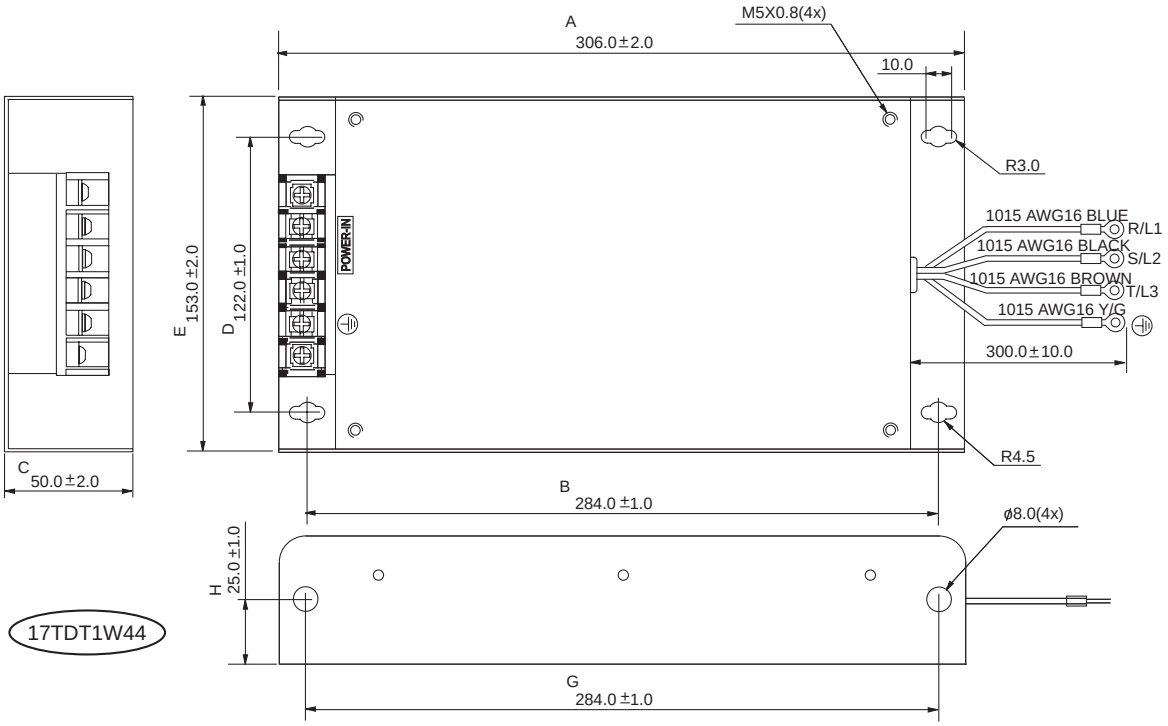

Figure 8 [units = mm]

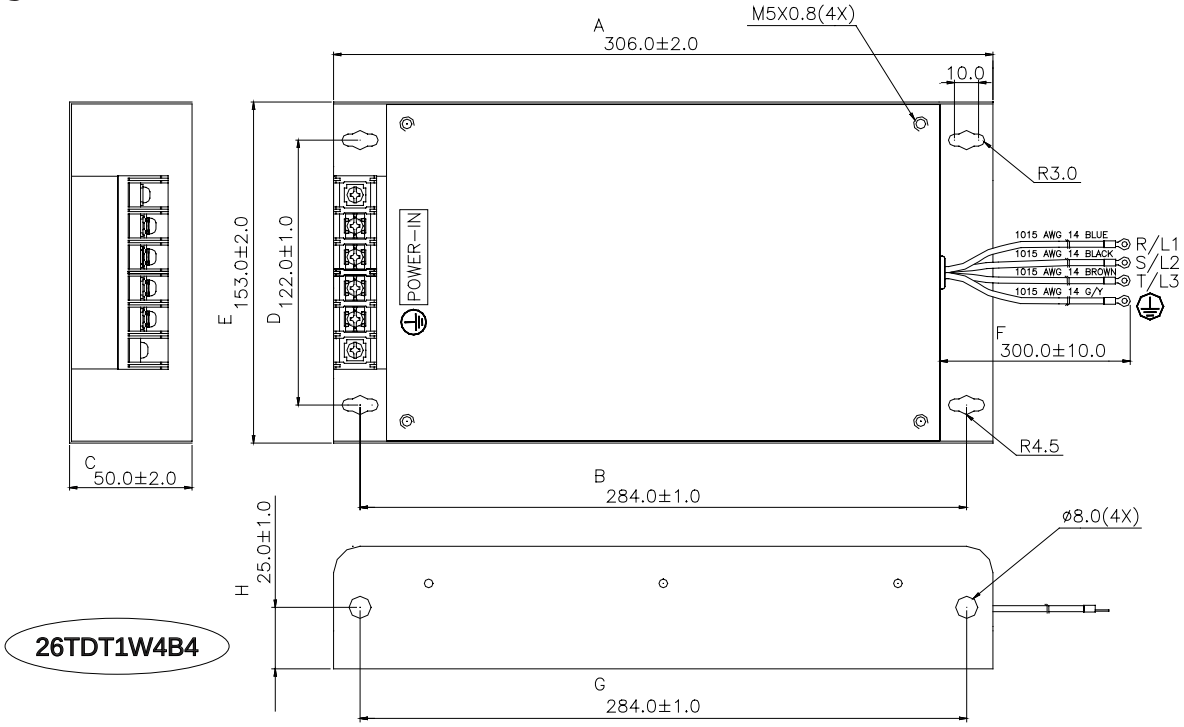

EMI Filter Connections

1-phase Input Power

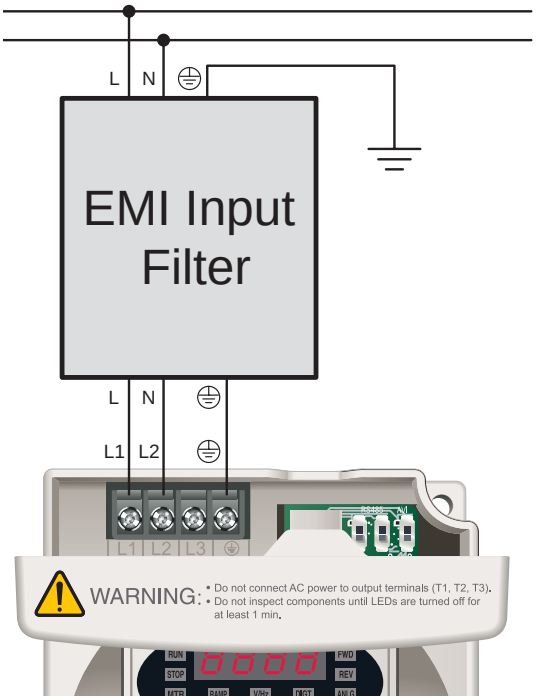

3-phase Input Power

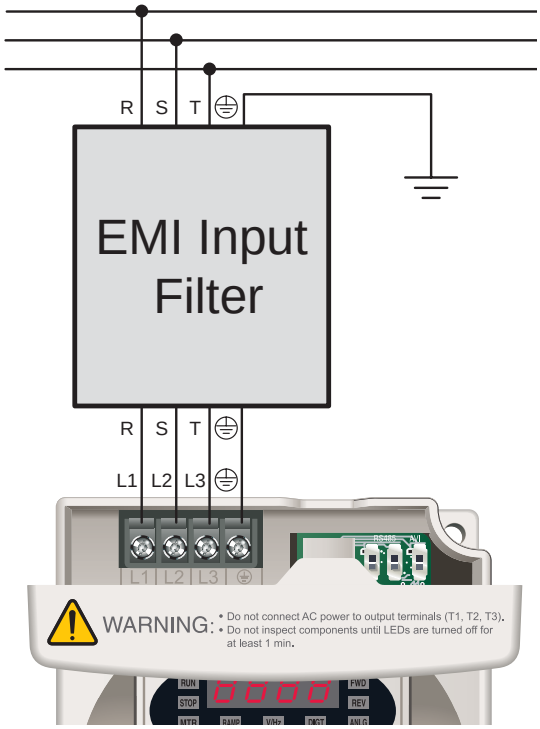

RF Filters

Description

Zero phase reactors, (aka RF noise filters) help reduce radiated noise from the AC drive power wiring. These RF filters are effective for noise reduction on both the input and output sides of AC drives. Attenuation quality is good in a wide range from AM band to 10 MHz.

Wiring Method

Wind each wire four times around the core, as shown in Figure 1. The reactor should me mounted as closely as possible to the drive.

If you are unable to wire as described above due to wire size or another aspects of your application, put all wires through four reactor cores in series without winding, as shown in Figure 2.

RF220X00A

RF Filter number RF220X00A can be used with all models of GS2 AC drives.

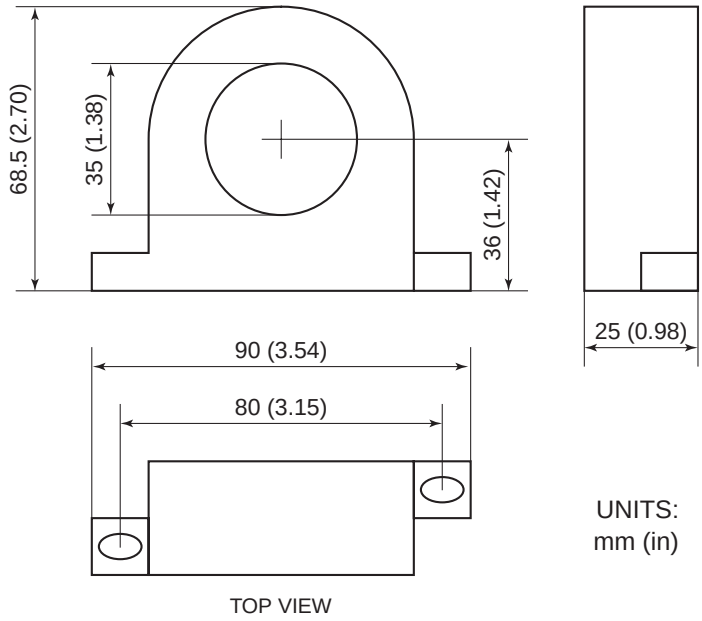

Figure 1

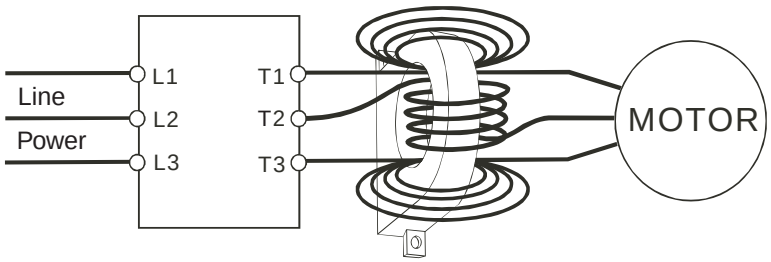

Figure 2

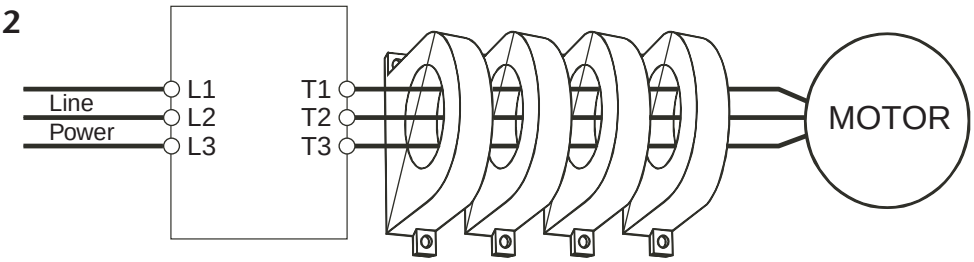

Fuses and Fuse Kits

Short-circuit and ground fault protection devices are essential to prevent costly damage to your AC Drive application equipment. Fuse kits are available from AutomationDirect for the 115V through 460V GS2 Series AC Drives.

Warning: The fuse kits provide protection only for the semiconductor components inside the AC drive. Motor branch circuit overcurrent protection should be separately provided using applicable local codes.

The following fuse kits consist of one fuse block and fuses sized to match each GS2 Series AC Drive. Replacement fuses are also available, and their part numbers are listed in the table below.

Fuse Kit Specifications (for 115V, 230V, 460V GS2 drive models)							
Part Number	**Drive Model / Phase**	**Fuse Block**	**Wire Size**	**Fuse Type**	**Dimen-sions**	**Fuse Rating**	**Replacement Fuses**
GS-10P2-FKIT-1P	GS2-10P2 / 1	2 pole	Al/Cu #2-14	A3T	Figure 1	300V@20A	**GS-10P2-FUSE-1P**
GS-10P5-FKIT-1P	GS2-10P5 / 1						**GS-10P5-FUSE-1P**
GS-11P0-FKIT-1P	GS2-11P0 / 1						**GS-11P0-FUSE-1P**
GS-20P5-FKIT-1P	GS2-20P5 / 1						**GS-20P5-FUSE-1P**
GS-20P5-FKIT-3P	GS2-20P5 / 3	3 pole			Figure 2	300V@10A	**GS-20P5-FUSE-3P**
GS-21P0-FKIT-1P	GS2-21P0 / 1	2 pole			Figure 1	300V@30A	**GS-21P0-FUSE-1P**
GS-21P0-FKIT-3P	GS2-21P0 / 3	3 pole			Figure 2	300V@20A	**GS-21P0-FUSE-3P**
GS-22P0-FKIT-1P	GS2-22P0 / 1	2 pole			Figure 1	300V@45A	**GS-22P0-FUSE-1P**
GS-22P0-FKIT-3P	GS2-22P0 / 3	3 pole			Figure 2	300V@25A	**GS-22P0-FUSE-3P**
GS-23P0-FKIT-1P	GS2-23P0 / 1	2 pole			Figure 1	300V@60A	**GS-23P0-FUSE-1P**
GS-23P0-FKIT-3P	GS2-23P0 / 3	3 pole			Figure 2	300V@40A	**GS-23P0-FUSE-3P**
GS-25P0-FKIT	GS2-25P0 / 3					300V@60A	**GS-25P0-FUSE**
GS-27P5-FKIT	GS2-27P5 / 3		Al/Cu 2/0-#6		Figure 3	300V @100A	**GS-27P5-FUSE**
GS-41P0-FKIT	GS2-41P0 / 3		Al/Cu #2-14	A6T	Figure 4	600V@10A	**GS-41P0-FUSE**
GS-42P0-FKIT	GS2-42P0 / 3					600V@15A	**GS-42P0-FUSE**
GS-43P0-FKIT	GS2-43P0 / 3					600V@20A	**GS-43P0-FUSE**
GS-45P0-FKIT	GS2-45P0 / 3					600V@30A	**GS-45P0-FUSE**
GS-47P5-FKIT	GS2-47P5 / 3				Figure 5	600V@50A	**GS-47P5-FUSE**
GS-4010-FKIT	GS2-4010 / 3		Al/Cu 2/0-#6		Figure 6	600V@70A	**GS-4010-FUSE**

Fuses and Fuse Kits (continued)

Edison Class CC fuses and fuse blocks are available for the 575V GS2 drives.

Fuses (for 575V GS2 drive models)							
Drive Model	**Fuse Rating**	**Fuse Type (Qty Req'd)**	**Edison Fuse**	**Edison Fuse Block**	**Dimensions**	**Poles**	**Wire Range**
GS2-51P0	6A @ 600V	CC (3)	**HCLR6**	**BC6033PQ or CHCC3D or CHCC3DI**	Figure 7	3	18-8 AWG (1-16 mm^2)
GS2-52P0	10A @ 600V		**HCLR10**				
GS2-53P0	15A @ 600V		**HCLR15**		Figure 8		
GS2-55P0							
GS2-57P5	20A @ 600V		**HCLR20**		Figure 8		
GS2-5010	30A @ 600V		**HCLR30**				

Fuses and Fuse Kits Dimensions

Figure 1
[units = inches]

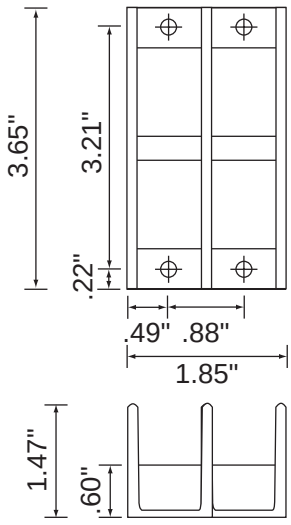

Figure 2
[units = inches]

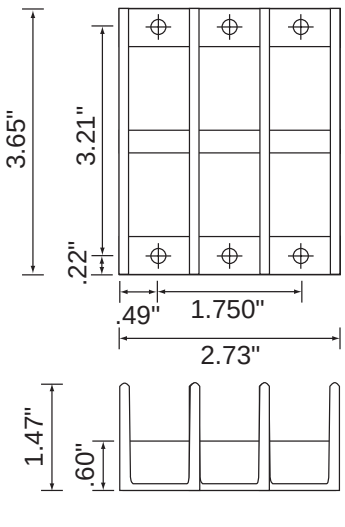

Figure 3
[units = inches]

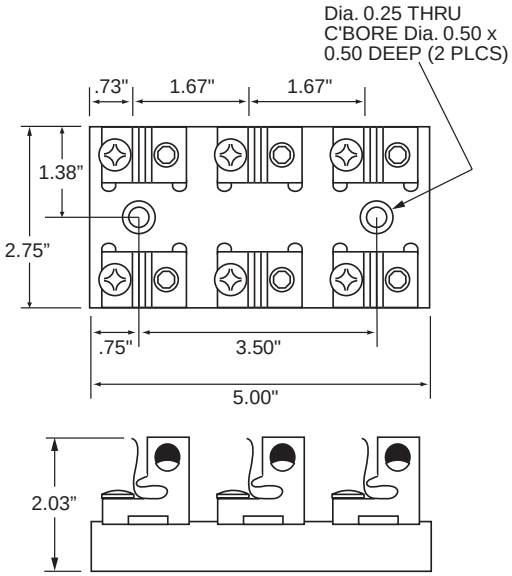

Fuses and Fuse Kits Dimensions (continued)

Figure 4 [units = inches]

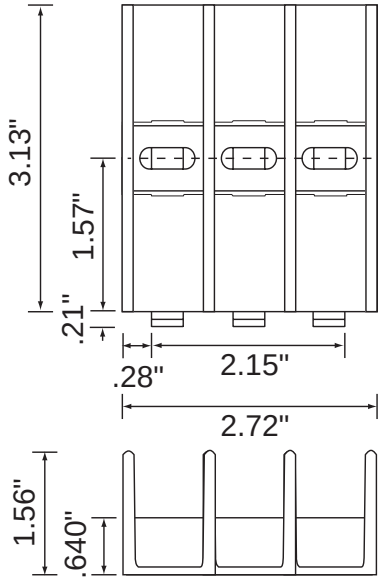

Figure 5 [units = inches]

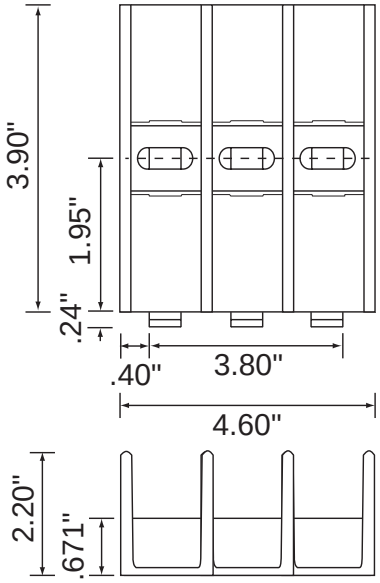

Figure 6 [units = inches]

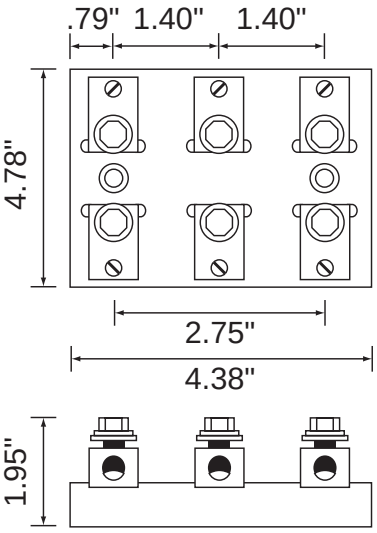

Figure 7 [units = inches (mm)]

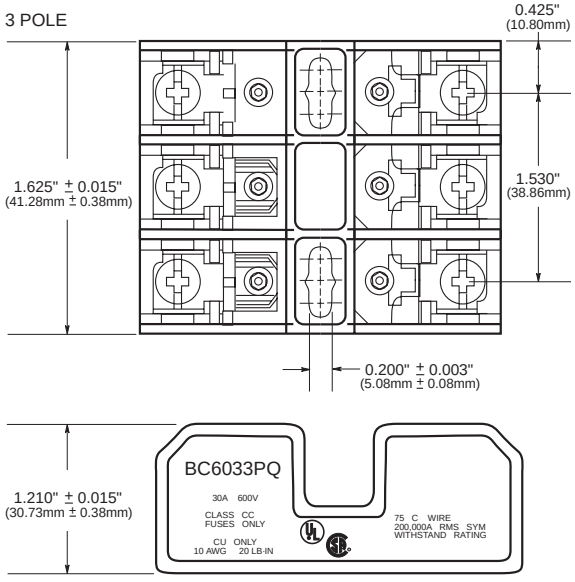

Figure 8 [units = mm (inches)]

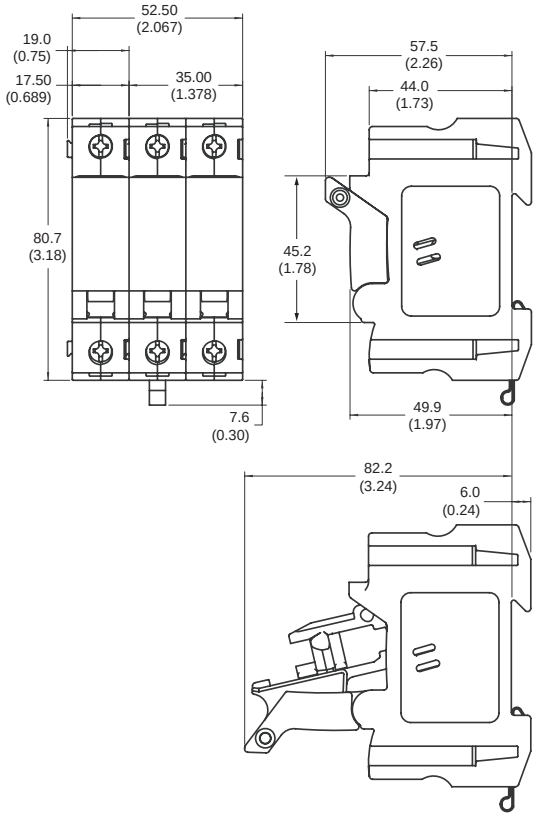

GS-EDRV Ethernet Interface

The GS-EDRV Ethernet Interface provides a low-cost, high-performance Ethernet link between a PLC/PC-based Control system and any GS Series AC Drive. The GS-EDRV mounts on DIN rail and communicates through cable connections to the AC drive and Ethernet hub or PC.

Functions and features of the interface:

- process input signals from the AC drive
- formats signals to conform to the Ethernet standard for connectivity to many control system architectures: H2-ERM or H4-ERM, KEPDirect EBC I/O server, or independent controller with a Modbus TCP/IP driver
- transmit the signals to the PC-based controller
- receive and translate output signals from the PLC/PC-based Control software
- distribute the output signals to the appropriate drive
- built-in web browser allows users to configure and control the drive from any web browser via the IP address of the GS-EDRV card.

The control function is not performed by the interface. The control function is performed by PC–based Control software (which is purchased separately) running on a PC.

The GS-EDRV requires an external 24 VDC power supply.

The GS series drives have a provision for shutting down control or power to the drive in the event of a communications time-out. This function can be set up through the drive parameter group 9.

GS-EDRV

Ethernet interface number GS-EDRV can be used with all models of GS2 AC drives.

Specifications		
Part Number	**Input Voltage**	**Input Current**
GS-EDRV	10-33 VDC	90-135 mA
Can be used with all GS2 AC drives.		

GS-EDRV Ethernet Interface (continued)

GS-EDRV

Dimensions

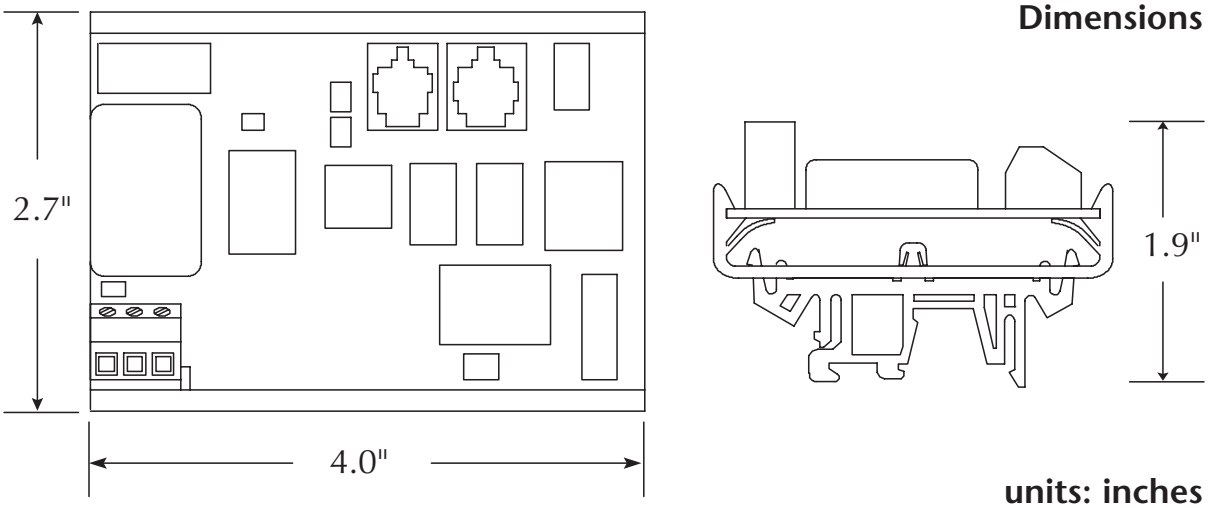

units: inches

GS Drive Configuration Software

GSoft is the optional configuration software for the GS family of AC drives. It allows you to connect a PC to a GS series AC drive via RS-232 or RS-485, and performs a variety of functions:

GS Series AC Drive Software	
Part Number	**Description**
GSOFT	GS drives configuration software

- Upload/download drive configurations
- Create new drive configurations using Quick Start, Detailed, or Schematic Views
- Edit drive configurations
- Archive/store multiple drive configurations on your PC
- Trend drive operation parameters
- Tune the drive PID loop
- View drive faults
- Print a schematic representation of the drive configuration

System Requirements

GSoft will run on PCs that meet the following requirements:

- Windows 95, 98, Me, NT, 2000, and XP
- Internet Explorer 4.0 or higher (for HTML help support)
- 24Mb of available memory
- 8 Mb hard drive space
- Available RS-232 serial port

Note: GSoft requires use of a configuration cable, GS-232CBL, which is sold separately.
Note: RS-485 communication from an RS-232 PC port requires an FA-ISOCON or compatible converter, which is sold separately.

Software Configuration Methods

GSoft offers 3 methods of creating a new configuration for your AC drive.

Quick Start Configuration

The Quick Start Configuration method guides you through the most commonly used AC drive parameters. Quick Start Configuration may ONLY be used to create a new configuration. Once created and saved, a configuration built with the Quick Start Configuration method may be edited using the Detailed or Schematic View methods.

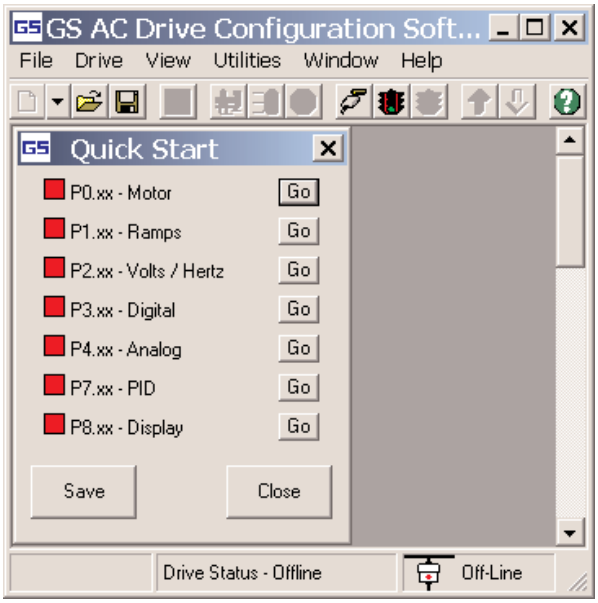

Software Configuration Methods (continued)

Detailed Configuration

The Detailed Configuration method provides AC drive parameter access in a tabbed dialog format. Detailed Configuration can be used for new or existing configurations.

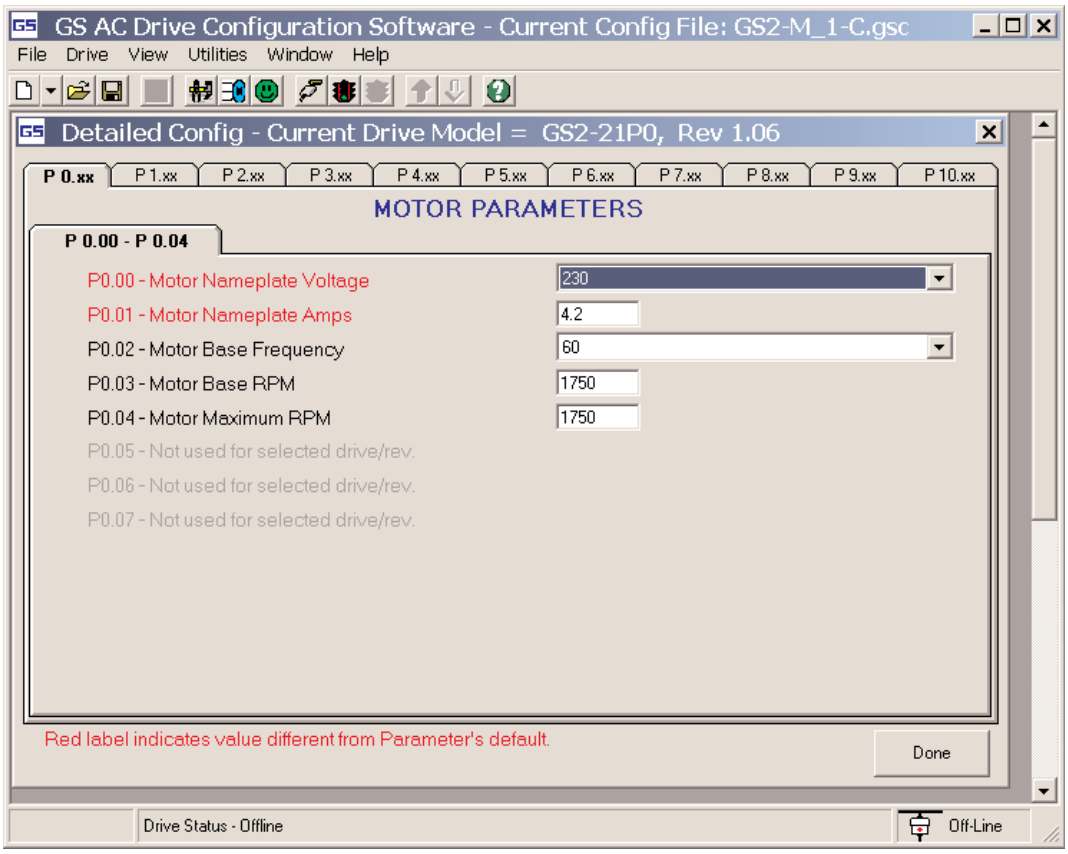

Software Configuration Methods (continued)

Schematic View Configuration

The Schematic View Configuration method uses a schematic picture of the AC drive and external connections to guide you through the setup of the AC drive. The Schematic View method can be used for new or existing configurations.

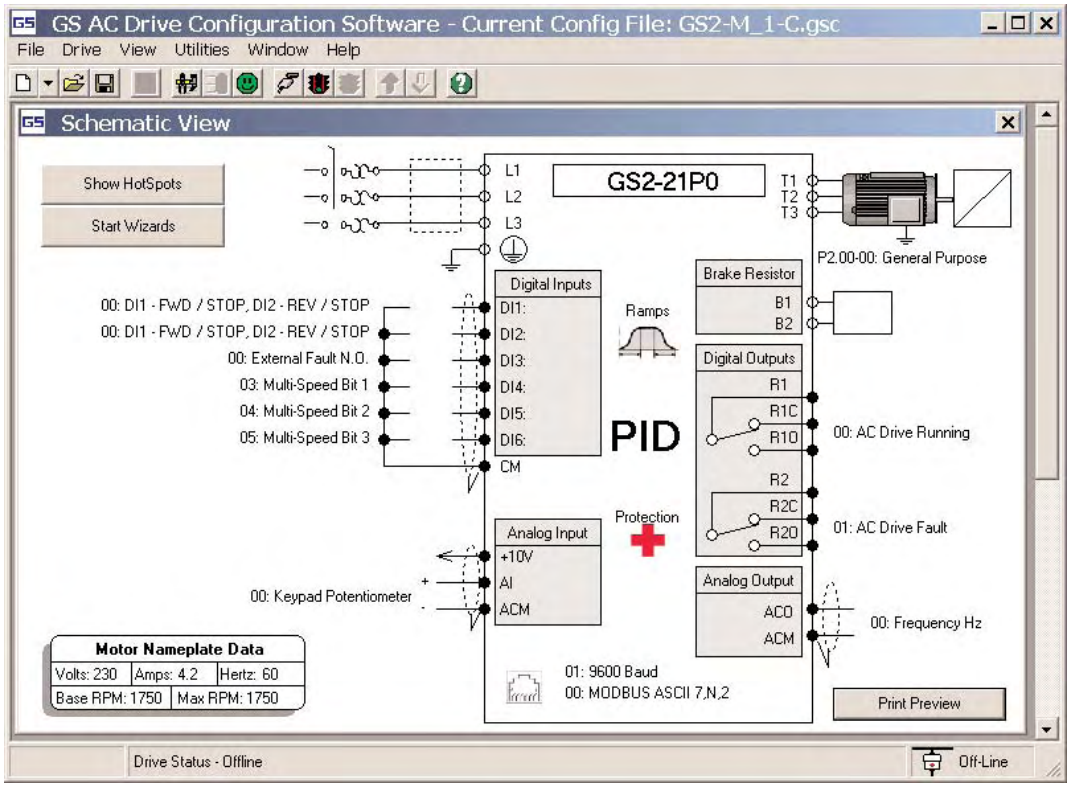

Miscellaneous Accessories

Configuration Cable

GS-232CBL

Required programming cable for GSOFT software.

Spare Keypad

GS2-KPD

Spare or replacement keypad for GS2 AC drives.

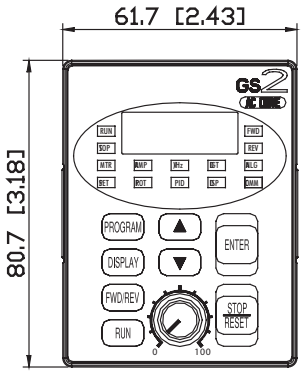

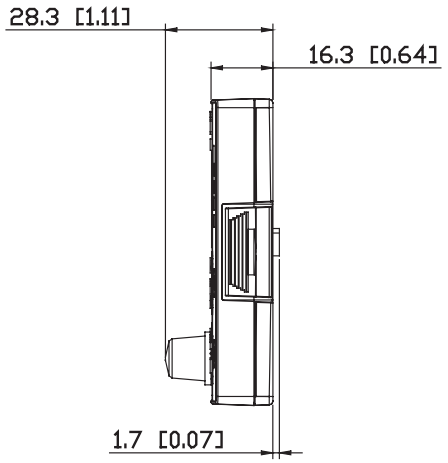

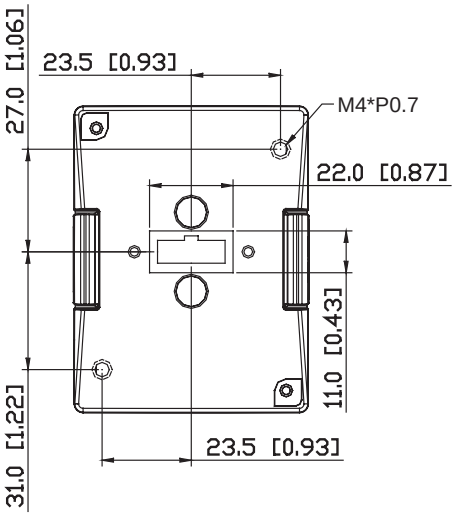

Keypad Cables

(installation screws included)

GS-CBL2-1L

1 meter keypad cable

GS-CBL2-3L

3 meter keypad cable

GS-CBL2-5L

5 meter keypad cable

GS-CBL2-1L **GS-CBL2-3L** **GS-CBL2-5L**

Communication Distribution Blocks

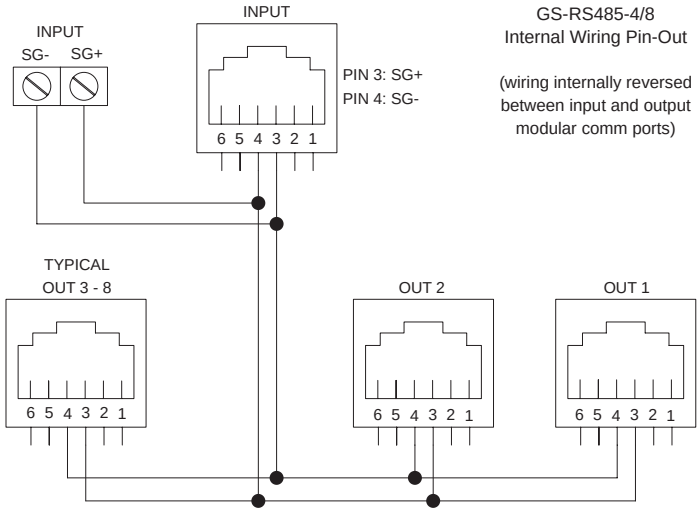

GS-RS485-4

4 port RS485 Communication Distribution Board

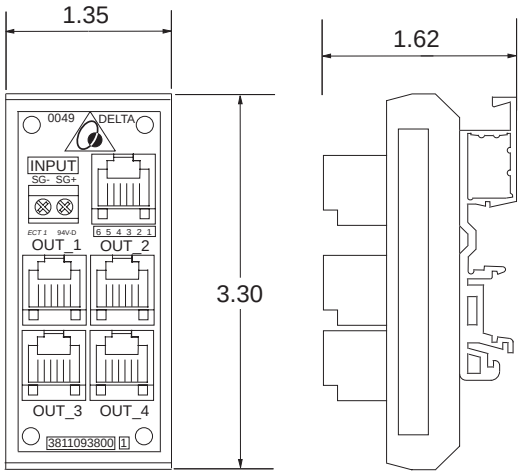

GS-RS485-8

8 port RS485 Communication Distribution Board

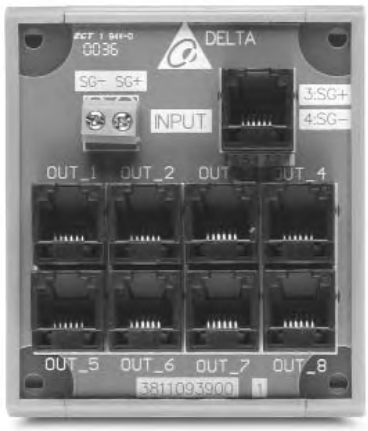

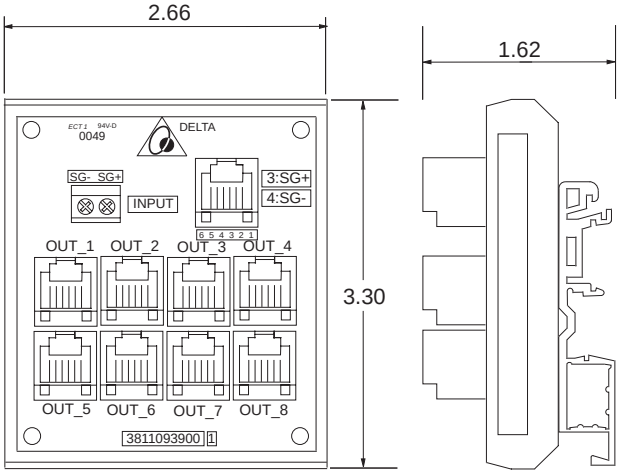

APPENDIX B

USING GS2 AC DRIVES WITH *DIRECT*LOGIC PLCS

In This Appendix

Compatible *Direct*LOGIC PLCs and Modules B–2

Typical Connections to the GS2 Series AC Drive . .B–7

DC Output Modules B–7

Isolated Analog Output Modules B–8

Non-Isolated Voltage or Sourcing Current Analog Output Modules B–9

Compatible *Direct*LOGIC PLCs and Modules

The following tables show which *Direct*LOGIC PLCs and modules can be used with the GS2 Series AC Drive.

DirectLOGIC PLC Modules for Use with GS2 AC Drives	
DL05 PLCs	
D0-05AR	DL05 CPU, 8 AC in / 6 Relay out, 110/220VAC Power Supply. Inputs: 8 AC inputs, 90-120 VAC, 2 isolated commons. Outputs: 6 Relay outputs, 6-27 VDC, 6-240 VAC, 2A/pt. max., 2 isolated commons
D0-05DR	DL05 CPU, 8 DC in / 6 Relay out, 110/220VAC Power Supply. Inputs: 8 DC inputs, 12-24 VDC current sinking/sourcing, 2 isolated commons. Outputs: 6 Relay outputs, 6-27 VDC, 6-240 VAC, 2A/pt. max., 2 isolated commons
D0-05DD	DL05 CPU, 8 DC in / 6 DC out, 110/220VAC Power Supply. Inputs: 8 DC inputs, 12-24 VDC current sinking/sourcing, 2 isolated commons. Outputs: 6 DC outputs, 6-27 VDC current sinking, 1.0A/pt. max.
D0-05DD-D	DL05 CPU, 8 DC in / 6 DC out, 12/24VDC Power Supply. Inputs: 8 DC inputs, 12-24 VDC current sinking/sourcing, 2 isolated commons. Outputs: 6 DC outputs, 6-27 VDC current sinking, 1.0A/pt. max.
D0-05DR-D	DL05 CPU, 8 DC in / 6 Relay out, 12/24VDC Power Supply. Inputs: 8 DC inputs, 12-24 VDC current sinking/sourcing, 2 isolated commons. Outputs: 6 Relay outputs, 6-27 VDC, 6-240 VAC, 2A/pt. max., 2 isolated commons
DL06 PLCs	
D0-06DD1	DL06 CPU, 20 DC in / 16 DC out, 110/220VAC Power Supply, with 0.3A 24VDC Auxiliary Device Power Supply. Inputs: 20 DC inputs, 12-24 VDC current sinking/sourcing, 5 isolated commons (4 inputs per common). Outputs: 16 DC outputs, 12-24 VDC current sinking, 1.0A/pt. max., 4 commons non-isolated (4 points per common)
D0-06DR	DL06 CPU, 20 DC in / 16 Relay out, 110/220VAC Power Supply, with 0.3A 24VDC Auxiliary Device Power Supply. Inputs: 20 DC inputs, 12-24 VDC current sinking/sourcing, 5 isolated commons (4 inputs per common). Outputs: 16 Relay outputs, 6-27 VDC, 6-240 VAC, 2A/pt. max., 4 isolated commons (4 points per common)
D0-06AR	DL06 CPU, 16 AC in / 20 Relay out, 110/220VAC power supply, with 0.3A 24VDC auxiliary device power supply. Inputs: 20 AC inputs, 90-120 VAC, 5 isolated commons (4 inputs per common). Outputs: 16 Relay outputs, 6-27 VDC, 6-240 VAC, 2A/pt. max., 4 isolated commons (4 points per common)
D0-06DD1-D	DL06 CPU, 20 DC in / 16 DC out, 12/24VDC Power Supply. Inputs: 20 DC inputs, 12-24 VDC current sinking/sourcing, 5 isolated commons (4 inputs per common). Outputs: 16 DC outputs, 12-24 VDC current sinking, 1.0A/pt. max., 4 commons non-isolated (4 points per common).
D0-06DR-D	DL06 CPU, 20 DC in / 16 Relay out, 110/220VAC Power Supply. Inputs: 20 DC inputs, 12-24 VDC current sinking/sourcing, 5 isolated commons (4 inputs per common). Outputs: 16 Relay outputs, 6-27 VDC, 6-240 VAC, 2A/pt. max., 4 isolated commons (4 points per common)
DL05/DL06 DC Input/Output Module	
D0-08CDD1	4 pt. 12-24VDC current sinking/sourcing input, 1 common, 4 pt. 12-24VDC sinking output, 0.3A/point, 1.2A/module, removable terminal, no fuse

DirectLOGIC PLC Modules for Use with GS2 AC Drives (cont.)	
DL05/DL06 DC Output Module	
D0-10TD1	10 pt. 12-24 VDC current sinking output module, 2 commons non-isolated (5 pts. per common), 0.3A/point, 1.5A/common, removable terminal, no fuse
D0-16TD1	16 pt. 12-24 VDC current sinking output module, 2 commons non-isolated (5 pts. per common), 0.3A/point, 1.5A/common, removable terminal, no fuse
DL05/DL06 Analog Module	
F0-2AD2DA-2	2 channel in, 2 channel out voltage analog option card; 0-5V, 0-10V
F0-4AD2DA-2	4 channel in, 2 channel out voltage analog option card; 0-5V, 0-10V
F0-4AD2DA-1	4 channel in, 2 channel sourcing out current analog option card; 4-20mA
DL105 PLCs	
F1-130DR	DL130 CPU, 10 DC in / 8 Relay out, 110/220VAC Power Supply. Inputs: 10 DC inputs, 12-24 VDC current sinking/sourcing, 3 isolated commons. Outputs: 8 relay outputs, 12-30 VDC, 12-250VAC, 7A/pt. max., 4 isolated commons
F1-130DD	DL130 CPU, 10 DC in / 8 DC out, 110/220VAC Power Supply. Inputs: 10 DC inputs, 12-24 VDC current sinking/sourcing, 3 isolated commons. Outputs: 8 DC outputs, 5-30VDC current sinking, 0.5A/pt. max, 3 internally connected commons
F1-130DR-D	DL130 CPU, 10 DC in / 8 Relay out, 12/24VDC Power Supply. Inputs: 10 DC inputs, 12-24 VDC current sinking/sourcing, 3 isolated commons. Outputs: 8 relay outputs, 12-30 VDC, 12-250VAC, 7A/pt. max., 4 isolated commons
F1-130DD-D	DL130 CPU, 10 DC in / 8 DC out, 12/24VDC Power Supply. Inputs: 10 DC inputs, 12-24 VDC current sinking/sourcing, 3 isolated commons. Outputs: 8 DC outputs, 5-30VDC current sinking, 0.5A/pt. max, 3 internally connected commons
DL205 DC Output Module	
D2-16TD1-2	16 pt. 12-24 VDC current sinking output module, 1 common (2 common terminals), 0.1A/point, 1.6A/module, no fuse, European type removable terminal
D2-32TD1	32 pt. 12-24 VDC current sinking output module. 1 common (4 common terminals), 0.1A/point, 3.2A/module, no fuse

DirectLOGIC PLC Modules for Use with GS2 AC Drives (cont.)	
DL205 Relay Output Modules	
D2-04TRS	4-pt. 5-30 VDC or 5-240 VAC isolated relay output module, 4 Form A (SPST) relays, 4 commons, 4A/point, 8.0A/module, replaceable fuse, removable terminal
D2-08TR	8-pt. 5-30 VDC or 5-240 VAC output module, 8 Form A (SPST) relays, 1 common (2 common terminals), 1A/point, 4.0A/module, replaceable fuse, removable terminal
F2-08TR	8-pt relay output, 10A/common, 5-30VDC or 5-240VAC
F2-08TRS	8-pt. 12-28 VDC or 12-240 VAC output module, 5 Form A (SPST) relays, 3 Form C (SPDT) relays, 8 isolated commons, 7A/point max., no fuses, removable terminal
D2-12TR	12 pt. 5-30 VDC or 5-240 VAC relay output module, 12 Form A (SPST) relays, 2 commons, 1.5A/point max., 3.0A/common, 2 replaceable fuses, removable terminal
DL205 DC Input/Output Modules	
D2-08CDR	4 pt. 24VDC sinking/sourcing input, 1 common, 4 pt. relay output, 1A/pt., 4A/module, 1 common, replaceable fuse
DL205 Analog Output Module	
F2-02DAS-1	2 channel, 16-bit resolution, Isolated 4-20mA sourcing (2 isolated commons). Designed to operate with 24 VDC user-supplied power supply.
F2-02DAS-2	2 channel analog output, 16 bit resolution, isolated, range: 0-5V, 0-10V (2 isolated commons). Designed to operate with 24 VDC user-supplied power supply.
F2-08DA-1	8 channel analog output module, 12 bit resolution, range: 4-20mA, sink or source output configurable. Designed to operate with 24 VDC user-supplied power supply.
F2-02DA-2	2 channel analog output module, 12 bit resolution, ranges: 0-5V, 0-10V, -5 to +5V, -10 to +10V. Designed to operate with 24 VDC user-supplied power supply.
F2-08DA-2	8 channel analog output module, 12 bit resolution, ranges: 0-5V, 0-10V. Designed to operate with 24 VDC user-supplied power supply.
DL205 Analog Input Modules	
F2-04AD-2	4 channel, 12-bit, 0-5V, 0-10V, -5 to +5V, -10 to +10V. Designed to operate with a 24VDC user supplied power supply.
F2-08AD-2	8 channel, 12-bit, 0-5V, 0-10V, -5 to +5V, -10 to +10V. Designed to operate with a 24VDC user supplied power supply.
DL205 Analog Combination Modules	
F2-8AD4DA-1	8 channel, 16-bit, 0-20mA in; 4 channel, 16-bit, 4-20mA out. Designed to operate with a 24VDC user supplied power supply.
F2-8AD4DA-2	8 channel, 16-bit, 0-5V, 0-10V in; 4 channel, 16-bit, 0-5V, 0-10V out. Designed to operate with a 24VDC user supplied power supply.

DirectLOGIC PLC Modules for Use with GS2 AC Drives (cont.)	
DL305 Relay Output Modules	
D3-08TR	8 pt. 5-30 VDC or 5-220 VAC output module, 5A/point DC or 4A/point AC, 8 Form A relays (SPST), 2 commons (isolated), non-removable terminal, 2 user replaceable fuses
D3-16TR	16 pt. 5-30 VDC or 5-220 VAC output module, 2A/point,16 Form A relays (SPST), 2 commons (isolated), removable terminal, no internal fuses
DL305 Analog Output Modules	
F3-04DAS	4 channel isolated analog output module, 12 bit resolution, ranges: 0 to 5V, 0 to 10V, -5 to +5V, -10 to +10V, 4 to 20mA, 0 to 20mA. -750 to +750 VDC channel to channel isolation
F3-16AD	16 channel analog input module, 12 bit resolution, ranges: -5 to +5V, -10 to +10V, 0 to 10V, 0 to 20mA. Each point can be either a voltage or current input
DL305 Analog Output Modules	
F3-04DAS	4 channel isolated analog output module, 12 bit resolution, ranges: 0 to 5V, 0 to 10V, -5 to +5V, -10 to +10V, 4 to 20mA, 0 to 20mA. -750 to +750 VDC channel to channel isolation
DL405 DC Output Modules	
D4-08TD1	8 pt. 12-24 VDC current sinking output module, 2 commons (internally connected), 2A/point, 5A/common, removable terminal
D4-16TD1	16 pt. 5-24 VDC current sinking output module, 2 commons (internally connected), 0.5A/point, 3A/common, removable terminal
D4-32TD1	32 pt. 5-24 VDC current sinking output module, 4 commons (isolated), 0.2A/point, 1.6A/common. Requires one connector, sold separately
DL405 Relay Output Modules	
D4-08TR	8 pt. 5-30 VDC or 5-250 VAC output module, 8 Form A (SPST) relays, 2 commons (isolated), 2A/point, 5A/common, removable terminal
F4-08TRS-1	8 pt. 12-30 VDC or 12-250 VAC isolated output module, 4 Form A (SPST) and 4 Form C (SPDT) relays, 8 commons (isolated), 10A/point, 40A/module, removable terminal
F4-08TRS-2	8 pt. 12-30 VDC or 12-250 VAC isolated output module, 4 Form A (SPST) relays and 4 Form C (SPDT) relays, 8 commons (isolated), 5A/point, 40A/module, replaceable fuses, removable terminals
D4-16TR	16 pt. 5-30 VDC or 5-250 VAC output module, 8 Form A (SPST) relays, 2 commons (isolated), 1A/point, 5A/common, removable terminals
DL405 Analog Input Modules	
F4-04ADS	4 channel isolated analog input module, 12 bit resolution, ranges: 0 - 5V, 0 - 10V, 1 - 5V, -5V to +5V, -10V to +10V, 0 - 20mA, 4 - 20mA
F4-08AD	8 channel analog input module, 12 bit resolution, ranges: 4 to 20mA, 1 to 5V, 0 to 20mA, 0 to 5V, 0 to 10V, -5V to +5V, -10V to +10V
F4-16AD-2	16 channel analog input module, 12 bit resolution, ranges: 0-5V, 0-10V
DL405 Analog Output Modules	
F4-04DAS-1	4 channel analog output module, 16 bit resolution, isolated, range: 4 to 20mA current sourcing
F4-04DAS-2	4 channel analog output module, 16 bit resolution, isolated, range: 0-5V, 0-10V
F4-08DA-2	8 channel analog output module, 12 bit resolution, range: 0-5V or 0-10V
F4-16DA-2	16 channel analog output module, 12 bit resolution, range: 0-5V or 0-10V

DirectLOGIC PLC Modules for Use with GS2 AC Drives (cont.)	
Terminator I/O DC Output Modules	
T1K-08TD1	8 pt. 12-24 VDC current sinking output module, 4 points per common, 1.0A/point, 2 replaceable fuses (T1K-FUSE-1). (use with T1K-08B or T1K-08B-1 terminal base)
T1K-16TD1	16 pt. 12-24 VDC current sinking output module, 4 points per common, 1.0A/point, 4 replaceable fuses (T1K-FUSE-1). (use with T1K-16B or T1K-16B-1 terminal base)
Terminator I/O Relay Output Modules	
T1K-08TR	8 pt. 5-30 VDC or 5-240 VAC output module, 8 Form A (SPST) relays, 4 points per common, 2.0A/point max., 2 replaceable fuses (T1K-FUSE-2). (use with T1K-08B or T1K-08B-1 terminal base)
T1K-16TR	16 pt. 5-30 VDC or 5-240 VAC output module, 16 Form A (SPST) relays, 4 points per common, 2.0A/point max., 4 replaceable fuses (T1K-FUSE-2). (use with T1K-16B or T1K-16B-1 terminal base)
T1K-08TRS	8 pt. 5-30 VDC or 5-240 VAC isolated relay output module, 8 Form A (SPST) relays, 1 point per common, 7.0A/point max., 8 replaceable fuses (T1K-FUSE-3). (isolation requires use of T1K-16B or T1K-16B-1 terminal base)
Terminator I/O Analog Input Modules	
T1F-08AD-2	8 channel analog input module, 14 bit resolution (13 bit plus sign bit), range: 0-5VDC, 0-10VDC, +/-5VDC, +/-10VDC (Use with T1K-08B or T1K-08B-1 terminal base.)
T1F-16AD-2	16 channel analog input module, 14 bit resolution (13 bit plus sign bit), range: 0-5VDC, 0-10VDC, +/-5VDC, +/-10VDC (use with T1K-16B or T1K-16B-1 terminal base.)
Terminator I/O Analog Output Modules	
T1F-08DA-2	8 channel analog output, 12 bit resolution, range: 0-5VDC, 0-10VDC, +/-5VDC, +/-10VDC. (use with T1K-08B or T1K-08B-1 terminal base)
T1F-16DA-2	16 channel analog output, 12 bit resolution, range: 1-5VDC, 1-10VDC, +/-5VDC, +/-10VDC. (use with T1K-16B or T1K-16B-1 terminal base)
Terminator I/O Analog Input/Output Modules	
T1F-8AD4DA-1	8 channel analog input module and 4 channel analog output module. Inputs: 14 bit resolution (13 bit plus sign bit), range: -20 to 20mA, 0-20mA, 4-20mA. Outputs: 12 bit resolution, range:4-20mA, sinking or sourcing compatible. (use with T1K-08B or T1K-08B-1 terminal base)
T1F-8AD4DA-2	8 channel analog input module and 4 channel analog output module. Inputs: 14 bit resolution (13 bit plus sign bit), range: 0-5VDC, 0-10VDC, +/-5VDC, +/-10VDC. Outputs: 12 bit resolution, range: 0-5VDC, 0-10VDC, +/-5VDC, +/-10VDC. (use with T1K-08B or T1K-08B-1 terminal base)

Typical Connections to the GS2 Series AC Drive

The following drawings show some typical connections between the GS2 Series AC Drive and DirectLOGIC PLCs and modules.

DC Output Modules

- D0-05DD
- D0-05DD-D
- D0-06DD1
- D0-06DD1-D
- D0-10TD1
- D0-16TD1
- D2-16TD1-2
- D2-32TD1
- D4-08TD1
- D4-16TD1
- D4-32TD1
- T1K-08TD1
- T1K-16TD1

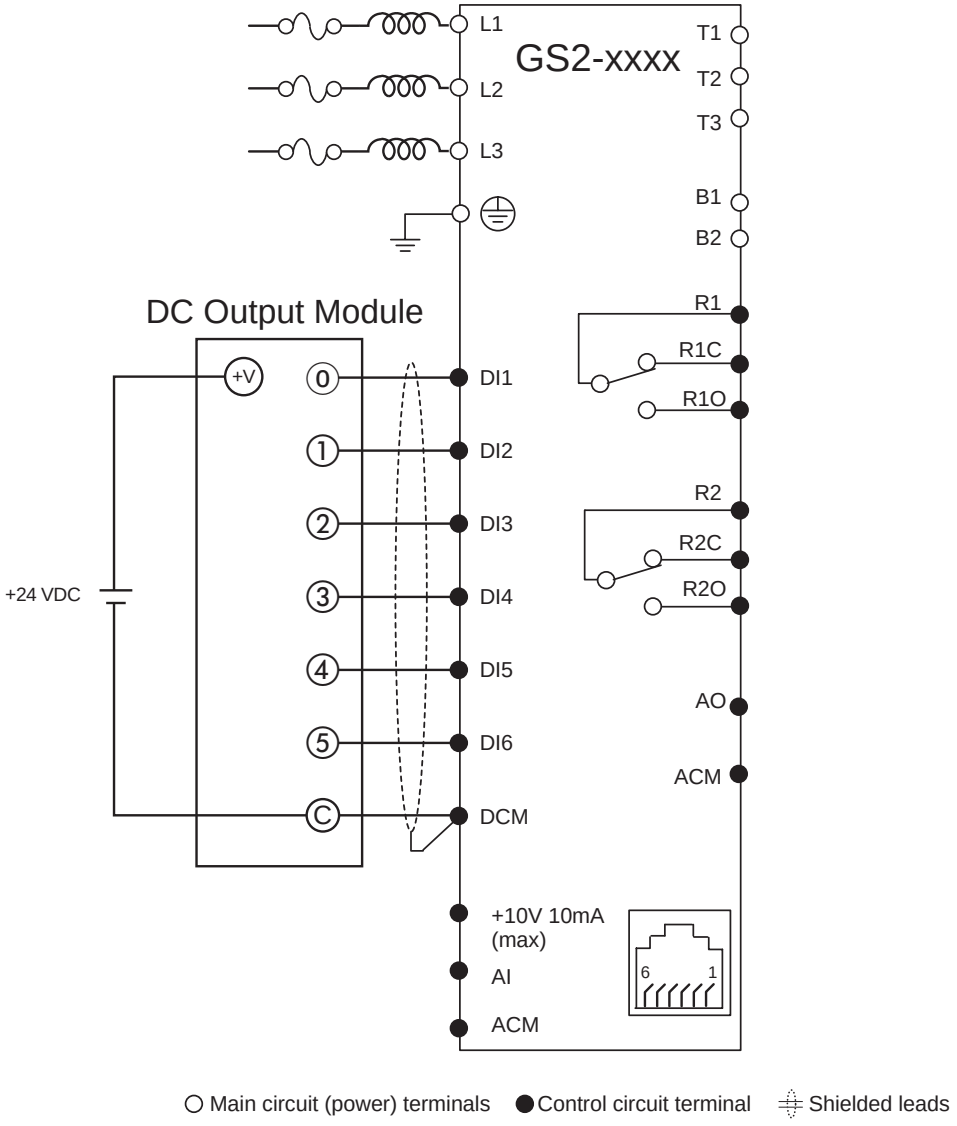

Isolated Analog Output Modules

- F2-02DAS-1
- F2-02DAS-2
- F4-04DAS-1
- F4-04DAS-2

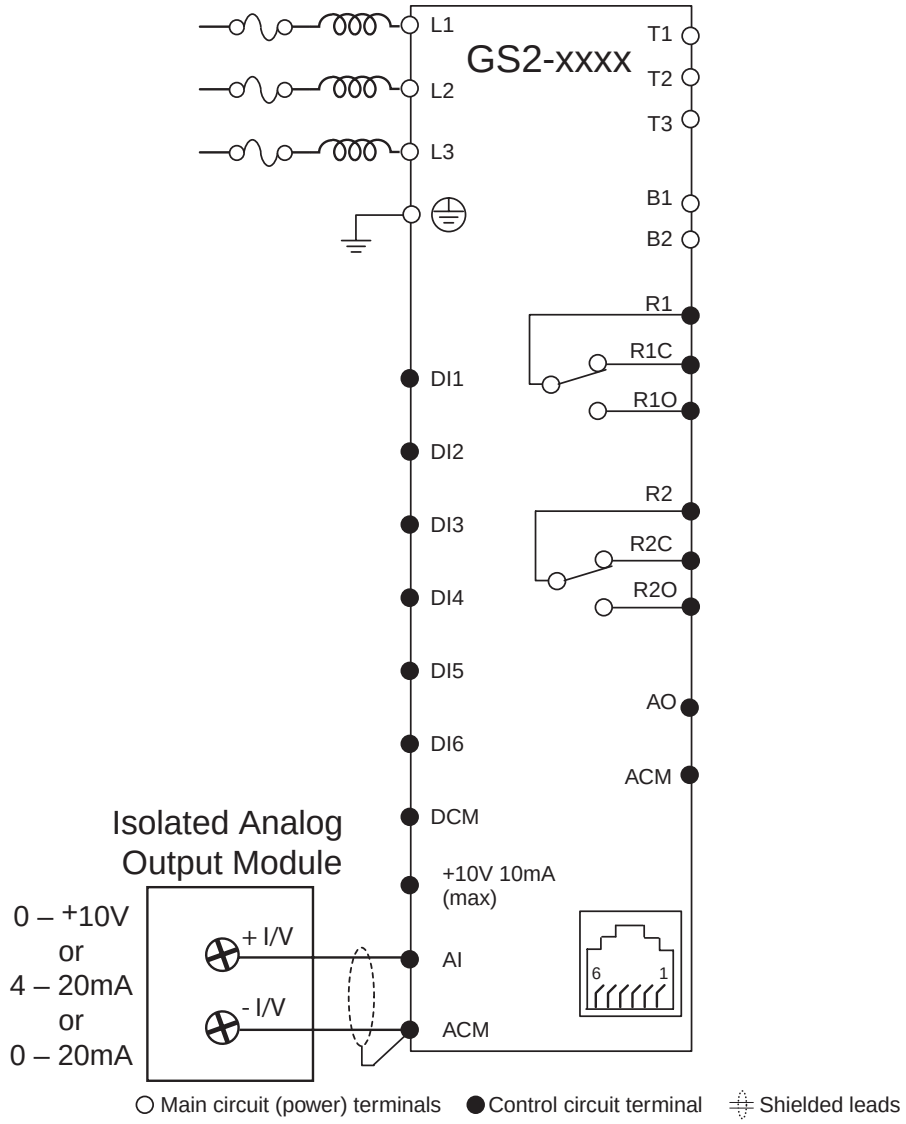

Non-Isolated Voltage or Sourcing Current Analog Output Modules

- F0-02AD2DA-2
- F0-04AD2DA-1
- F0-04AD2DA-2
- F2-02DAS-1
- F2-02DAS-2
- F2-08DA-1
- F2-02DA-2
- F2-08DA-2
- F2-8AD4DA-1
- F2-8AD4DA-2
- F4-08DA-2
- F4-16DA-2
- T1F-08DA-2
- T1F-16DA-2
- T1F-8AD4DA-1
- T1F-8AD4DA-2

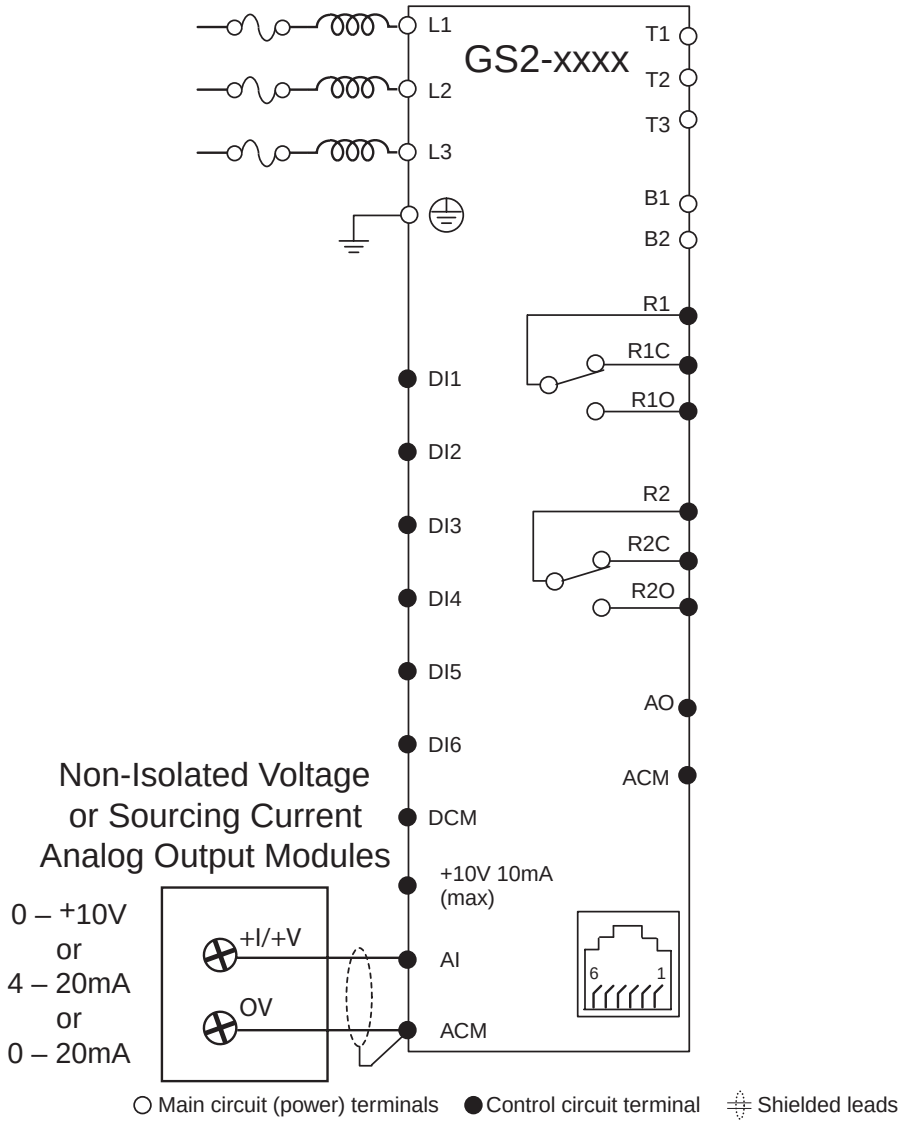

INDEX

A

AC Drives - Purpose; 1–3
Accel 1 to Accel 2 Frequency Transition; 4–16
Acceleration S-Curve; 4–14
Acceleration Time; 4–13
Accessories; 2–12, A–1
AFD - Adjustable Frequency Drive; 1–3
Agency Approvals; 1–8, 2–7
Air Flow; 2–3
Ambient Conditions; 1–8, 2–2
Amps/Current
    Motor Nameplate Amps; 4–11
    Over-Current Stall Prevention; 4–47
    Overload; 4–43
Analog Input
    Examples; 4–34
    Gain; 4–33
    Loss of ACI Signal; 4–40
    Offset; 4–33
    Offset Polarity; 4–32
    Reverse Motion Enable; 4–33
Analog Output; 4–40
    Gain; 4–40
    Signal; 4–40
Analog Parameters; 4–32
Applicable Codes; 2–7
Auto Adjustable Accel/Decel; 4–46
Auto Restart After Fault; 4–44
Auto Voltage Regulation; 4–45
Auto-torque Boost; 4–20

B

Base-Block Time for Speed Search; 4–48
Block Transfer Parameters; 4–58, 5–29
Braking Resistors; 2–12, A–8

C

Cables
    Configuration Cables; A–25
    Keypad Cables; A–25
CE; 1–8
CEC; 2–7
Circuit Connections Warnings & Notes; 2–6
Communicating with DirectLogic PLCs; 5–12
Communicating with Third-party Devices; 5–30
Communication Address; 4–56
Communication Connections to DL PLCs; 5–12
Communication Distribution Blocks; A–26
Communication Parameters; 4–56
Communication Protocol; 4–56
Communication Transmission Speed; 4–56
Compatibility, GS2 and Direct LOGIC PLCs; B–2
Configuration Cable; A–25
Configuration Software; A–22
    Configuration Cable; A–25

Configuring/Programming the AC Drive
Keypad Configuration; 3–5
Software Configuration; A–22
Configuration Cable; A–25
Contactor; 2–6, 2–12
Contents of Drive Package; 1–3
Control Terminals & Wiring; 1–4, 2–10, 2–11
cUL; 1–8, 2–7
Current/Amps
Motor Nameplate Amps; 4–11
Over-Current Stall Prevention; 4–47
Overload; 4–43

D

DC Injection
Current Level; 4–18
during Start-up; 4–18
during Stopping; 4–18
Start-point; 4–18
Decel 1 to Decel 2 Frequency Transition; 4–16
Deceleration S-Curve; 4–15
Deceleration Time; 4–14
Default, Restore Parameters; 4–57
Desired Current; 4–31
Desired Frequency; 4–31
Dimensions; 2–4
Direction Command
Digital Input FWD/REV; 4–22
Keypad FWD/REV; 3–3
Serial Comm Direction Command; 4–59
DirectLOGIC Modbus PLC Programming; 5–16
DirectLOGIC PLCs; B–2
DirectLogic PLCs, Communicating with; 5–12
Disable
Digital Input Disable; 4–23, 4–29
Disable PID; 4–23
Disconnect switch; 2–6
Display; 3–2
Display Parameters; 4–55
Display Frequency Scale Factor; 4–55
Display Function; 4–55
Distribution Blocks, Communication; A–26

E

Electro-Magnetic Interference; 2–7
EMI; 2–7
EMI Filters; 2–12, A–10
Enclosure Rating; 1–8, 2–2
Environmental Conditions; 1–8, 2–2
Error Codes; 5–9, 6–3
Ethernet Interface; A–20
Examples
Analog Input Examples; 4–34
DL PLC Program Example for Modbus; 5–16
External Fault
External Fault, Digital Input; 4–23, 4–24
External Fault, Serial Comm; 4–60
External Parts; 1–4
Cover - lower terminals; 1–4
Cover - upper terminals; 1–4
DIP Switches; 1–4
Keypad; 1–4
Mounting Screw Holes; 1–4
Nameplate Label; 1–4
Terminals - control wiring; 1–4
Terminals - power input wiring; 1–4
Terminals - power output wiring; 1–4
Ventilation Slots; 1–4

F

Fault Codes; 6–3
Fault Record; 4–50
Fault Reset
External DI Fault Reset; 4–23, 4–24
Keypad Fault Reset; 3–3
Serial Comm Fault Reset; 4–60
Fault, External; 4–23, 4–24, 4–60
Filters
EMI Filters; 2–12, A–10
RF Filters; A–16

Frequency
Jog Frequency; 4–41
Mid-point Frequency; 4–20
Minimum Output Frequency; 4–21
Motor Base Frequency; 4–12
PID Output Frequency Limit; 4–54
PWM Carrier Frequency; 4–21
Source of Frequency Command; 4–32
Volts/Hertz Parameters; 4–19
Frequency Command / Speed Reference
Serial Comm Speed Reference; 4–59
Source of Frequency Command; 4–32
Function Keys; 3–3
Fuses; 2–12, A–17

G

Ground Loops; 2–6
Grounding Resistance; 2–6
GS Series Number; 4–60
GS-EDRV Ethernet Interface; A–20
GSOFT Configuration Software; A–22
Configuration Cable; A–25

I

Inspection; 6–2
Annual; 6–2
Monthly; 6–2
Installation; 2–3
Air Flow; 2–3
Dimensions; 2–4
Minimum Clearances; 2–3
Inverter; 1–3

J

Jog Command
Digital Input Jog Command; 4–23, 4–25
Serial Comm Jog Command; 4–60
Jog Frequency; 4–41

K

Keypad; 3–2
Keypad Cables; A–25
Keypad, Spare; A–25

L

Label, Nameplate Information; 1–3
LED Display; 3–2
LED Indicators; 3–2
Lower Bound
of Output Frequency; 4–49

M

Maintenance; 6–2
Manufacturer Model Information; 4–61
Maximum Allowable Power Loss Time; 4–48
Maximum Speed Search Current Level; 4–48
Memory Addresses for Parameters; 5–4
Mid-point Frequency; 4–20
Mid-point Voltage; 4–20
Minimum Clearances; 2–3
Minimum Output Frequency; 4–21
Minimum Output Voltage; 4–21
Modbus ASCII; 5–30
Modbus Communication with Third-Party Devices; 5–30
Modbus Communications; 5–1
Modbus Connections to DL PLCs; 5–12
Modbus Control, PLC Programming; 5–16
Modbus RTU; 5–30
Model Information; 4–61
Model Number Explanation; 1–3
Momentary Power Loss; 4–44
Motor Base Frequency; 4–12
Motor Base RPM; 4–12
Motor Maximum RPM; 4–12
Motor Nameplate Amps; 4–11
Motor Nameplate Voltage; 4–11
Motor Parameters; 4–11
Motors

Single-Phase; 2–7
Three-Phase; 1–3
Mounting Screw Holes; 1–4, 2–4
Multi-Function Input Disable; 4–29
Multi-function Input Terminals; 4–22
Multi-function Output Terminals; 4–30
Multi-Speed
Auto Voltage Regulation; 4–45
Digital Input Multi-Speed Bits; 4–23, 4–25
Multi-Speed Settings; 4–42

N

Nameplate Label Information; 1–3
NEC; 2–7
NEMA Publications; 1–2

O

Operation Command; 4–22
Over-Current
Stall Prevention During Acceleration; 4–47
Stall Prevention During Operation; 4–47
Overload; 4–43
Over-Torque
Detection Level; 4–46
Detection Mode; 4–46
Detection Time; 4–46
Over-Voltage
Stall Prevention; 4–45

P

Parameter Lock; 4–57
Parameter Memory Addresses; 5–4
Parameter Summary; 4–2
Parameters, Detailed Listings; 4–11
Restore Parameters to Default Settings; 4–57
PID
PID Deviation Alarm; 4–30
PID Deviation Level; 4–31
PID Deviation Time; 4–31
PID DI Setpoint Bits; 4–23, 4–25
PID Deviation Alarm; 4–30
PID Parameters; 4–51
Derivative Control; 4–53
Derivative Filter Time Constant; 4–54
Feedback Loss Operation; 4–54
Feedback Signal Loss Detection Time; 4–54
Input Terminal for PID Feedback; 4–51
Integral Control; 4–53
Keypad Setpoint; 4–52
Multi-setpoints; 4–52
Output Frequency Limit; 4–54
Proportional Control; 4–53
PV 100% Value; 4–52
PV Setpoint Source; 4–52
Upper Bound for Integral Control; 4–54
PID SP Digital Inputs; 4–23
PLC Module Typical Connections; B–7
PLC Modules; B–2
PLC Programming for Modbus Control; 5–16
PLCs, DirectLOGIC, Communicating with; 5–12
Potentiometer
Keypad Potentiometer; 3–3
Remote Potentiometer; 2–11
Power Terminals & Wiring; 1–4, 2–7, 2–8, 2–9, 2–11
Present Fault Record; 4–50
Preset Parameters; 4–41
Programming/Configuring the AC Drive
Keypad Configuration; 3–5
Software Configuration; A–22
Configuration Cable; A–25
Protection Parameters; 4–43
Purpose of AC Drives; 1–3
PWM Carrier Frequency; 4–21

R

Ramp Parameters; 4–13
Reactors; 2–12, A–2
Reset, Fault

External DI Fault Reset; 4–23, 4–24
Keypad Fault Reset; 3–3
Serial Comm Fault Reset; 4–60
Resistors, Braking; 2–12, A–8
Restore Parameters to Default Values; 4–57
Reverse Operation Inhibit; 4–44
RF Filters; A–16
RPM
Motor Base RPM; 4–12
Motor Maximum RPM; 4–12
RS-232 Communication Interface; 5–12, 5–30
RS-232 Selector DIP Switches; 1–4, 5–12, 5–30
RS-232 to RS-485 Conversion; 5–13
Wiring Connections to DL PLCs; 5–12
RS-485 Communication Interface; 5–13, 5–14, 5–30
RS-232 to RS-485 Conversion; 5–13
RS-485 Comm Distribution Board; A–26
RS-485 Selector DIP Switches; 1–4, 5–13, 5–30
Wiring Connections to DL PLCs; 5–13, 5–14
Run Command
Digital Input Run Command; 4–22
Keypad Run; 3–3
Serial Comm Run Command; 4–59

S

Safety Codes; 2–7
Select method for 2nd Accel/Decel; 4–16
Serial Comm Speed Reference; 4–59
Short Circuit Withstand Current; 2–7
Single-Phase Motors; 2–7
Skip Frequency; 4–17
Skip Frequency Band; 4–17
Slip Compensation; 4–20
Software, Configuration; A–22
Configuration Cable; A–25
Source of Frequency Command; 4–32
Source of Operation Command; 4–22
Special Symbols; 1–2
Specifications; 1–5
Speed Reference / Frequency Command
Serial Comm Speed Reference; 4–59
Source of Frequency Command; 4–32
Status Addresses; 5–9
Status Monitor; 5–9, 5–10
Status of the AC Drive
Keypad; 3–4
Serial Comm; 5–9
Stop
Digital Input Stop; 4–22
Keypad Stop; 3–3
Stop Methods; 4–13
Supplemental Publications; 1–2
NEMA Publications; 1–2

T

Technical Support; 1–2
Three-Phase Motors; 1–3
Time Out Detection; 4–57
Time Out Duration; 4–57
Torque
Over-Torque Detection; 4–46
Torque, Constant; 3–6
Torque, Variable; 3–11
Transmission Fault Treatment; 4–57
Troubleshooting; 6–3

U

UL; 1–8, 2–7
Upper Bound
for PID Integral Control; 4–54
of Output Frequency; 4–49

V

Ventilation Slots; 1–4
VFD - Variable Frequency Drive; 1–3
Voltage
Mid-point Voltage; 4–20

Minimum Output Voltage; 4–21
Motor Nameplate Voltage; 4–11
Over-Voltage Stall Prevention; 4–45
Volts/Hertz Parameters; 4–19
Volts/Hertz Parameters; 4–19

W

Warning Messages; 6–6
Warnings & Notes - circuit connections; 2–6
Warnings & Notes - general; 1–2
Wiring & Circuit Connections; 2–6
Basic Wiring Diagram; 2–11
Control Circuit Wiring; 2–7, 2–10
Main Circuit Wiring; 2–7, 2–8, 2–9, 2–11
Serial Comm Wiring Connections; 5–12
Shielded Wiring; 2–10
Warnings; 2–6
Wiring Notes; 2–6
Wiring Connections to DL PLC Modules; B–7

G S 2 - M

2 M 0 3

HEAT EXCHANGER

TEMPERATURE CONTROLLER

HONEY WELL

UDC2500

Honeywell

UDC2500
Universal Digital Controller
Limit Control Model
Product Manual

51-52-25-118

March 2007

Honeywell Process Solutions
Industrial Measurement and Control

Notices and Trademarks

Copyright 2007 by Honeywell
Revision 5 March 2007

WARRANTY/REMEDY

□one□□ell □arrants goo□s o□its □an□act□re as □eing □ree o□□e□recti□e □aterials an□ □a□lt□ □or□□anship□Contact □o□r local sales o□ice □or □arrant□in□or□ation□□□□arrante□ goo□s are ret□rne□ to □one□□ell □□ring the perio□ o□co□erage, □one□□ell □ill repair or replace □itho□t charge those ite□s it □in□s □e□recti□e□□he □oregoing is B□□er□s sole re□ e□□an□ is **in lieu of all other warranties, expressed or implied, including those of merchantability and fitness for a particular purpose**□□peci□ications □a□change □itho□t notice□□he in□or□ation □e s□ppl□is □elie□e□ to □e acc□rate an□ relia□le as o□this printing□□o□e□er, □e ass□□e no responsi□ilit□ □or its □se□

While □e pro□i□e application assistance personall□, thro□gh o□r literat□re an□ the □one□□ell □e□ site, it is □p to the c□sto□er to □eter□ine the s□ita□ilit□o□the pro□□ct in the application□

Honeywell Process Solutions
Industrial Measurement and Control

512 Virginia Drive
Fort Washington, PA 19034

□DC2500 is a □□□registere□ tra□e□ ar□o□□one□□ell

□ther □ran□ or pro□□ct na□es are tra□e□ ar□s o□their respecti□e o□ners□

About This Document

Abstract

This document provides descriptions and procedures for the Installation, Configuration, Operation, and Troubleshooting of your UDC2500 Controller.

Contacts

World Wide Web

The following lists Honeywell's World Wide Web sites that will be of interest to our customers.

Honeywell Organization	WWW Address (URL)
Corporate	*http://www.honeywell.com*
□n□□strial Meas□re□ent an□ Control	*http://www.honeywell.com/ps*
□echnical tips	*http://content.honeywell.com/ipc/faq*

Telephone

Contact us by telephone at the numbers listed below.

	Organization	Phone Number
□nite□ □tates an□ Cana□a	□one□□ell	1□800□423□□883 □ech□□□pport 1□800□525□□43□ □er□ice

Symbol Definitions

The following table lists those symbols used in this document to denote certain conditions.

Symbol	Definition
	This C□□□□□□ s□□ □ol on the e□□ip□ent re□ers the □ser to the □ro□□ct Man□al □or a□□itional in□or□ation□□his s□□ □ol appears next to re□□ire□ in□or□ation in the □an□al□
	WARNING **PERSONAL INJURY:** □is□o□electrical shoc□□□his s□□ □ol □arns the □ser o□a potential shoc□ ha□ar□ □here □□□□□D□□□ □□□□ □oltages greater than 30 □r□s, 42□4 □pea□, or □0 □DC □a□□e accessi□le□**Failure to comply with these instructions could result in death or serious injury.**
	□□□□□□□□□, □lectrostatic Discharge □□□D□ha□ar□s□□ □ser□e preca□tions □or han□ling electrostatic sensiti□e □e□ices
	□rotecti□e □arth □□□□ter□inal□□ro□i□e□ □or connection o□the protecti□e earth □green or green□□ello□□s□ppl□s□ste□ con□□ctor□
	□□nctional earth ter□inal□□se□ □or non□sa□et□p□rposes s□ch as noise i□ □ □nit□ i□ pro□e□ent□□ □ □□□□his connection shall □e □on□e□ to protecti□e earth at the so□rce o□s□ppl□in accor□ance □ith national local electrical co□e re□□ire□ents□
	□arth □ro□n□□□□nctional earth connection□□ □ □□□□his connection shall □e □on□e□ to □rotecti□e earth at the so□rce o□s□ppl□in accor□ance □ith national an□ local electrical co□e re□□ire□ents□
	Chassis □ro□n□□□□enti□ies a connection to the chassis or □ra□e o□the e□□ip□ent shall □e □on□e□ to □rotecti□e □arth at the so□rce o□s□ppl□in accor□ance □ith national an□ local electrical co□e re□□ire□ents□

Contents

1 INTRODUCTION 1

1.1 Overview 1
1.1.1 Function of keys 3
1.2 Process Instrument Explorer Software 4
1.3 CE Conformity (Europe) 6

2 INSTALLATION 7

2.1 Overview 7
2.2 Condensed Specifications 8
2.3 Model Number Interpretation 11
2.4 Limit and Alarm Relay Contact Information 13
2.5 Mounting 14
2.6 Wiring 16
2.6.1 Electrical Considerations 16
2.7 Wiring Diagrams 18
2.8 Limit Control Application Diagram 25

3 CONFIGURATION 26

3.1 Overview 26
3.2 Configuration Prompt Hierarchy 27
3.3 Configuration Procedure 28
3.4 Lock Set Up Group 29
3.5 Limit Set Up Group 30
3.6 Input 1 Set Up Group 31
3.7 Options Set Up Group 35
3.8 Communications Set Up Group 37
3.9 Alarms Set Up Group 40
3.10 Display Set Up Group 44
3.11 P.I.E. Tool Ethernet and Email Configuration Screens 46
3.12 Configuration Record Sheet 49

4 OPERATING THE LIMIT CONTROLLER 50

4.1 Overview 50
4.2 Operator Interface 51
4.3 Entering a Security Code 51
4.4 Lockout Feature 52

4.5 Monitoring Your Limit Controller 53
4.6 Operating Your Limit Controller 55
4.7 Alarm Setpoints 58
4.8 P.I.E. Tool Maintenance Screens 59
4.9 Configuring your Ethernet Connection 65

5 INPUT CALIBRATION 70
5.1 Overview 70
5.2 Minimum and Maximum Range Values 71
5.3 Preliminary Information 73
5.4 Input 1 Set Up Wiring 74
5.5 Input 1 Calibration Procedure 79
5.6 Restore Input Factory Calibration 80

6 OUTPUT CALIBRATION 83
6.1 Overview 83
6.2 Auxiliary Output Calibration 83
6.3 Restore Output Factory Calibration 85

7 TROUBLESHOOTING/SERVICE 87
7.1 Overview 87
7.2 Troubleshooting Aids 88
7.3 Power-up Tests 90
7.4 Status Tests 90
7.5 Background Tests 91
7.6 Controller Failure Symptoms 93
7.7 Troubleshooting Procedures 94
7.8 Restoring Factory Configuration 100

8 PARTS LIST 101
8.1 Exploded View 101
8.2 Removing the chassis 103

9 MODBUS RTU FUNCTION CODES 104
9.1 Overview 104
9.2 General Information 104
9.3 Function Code 20 (14h) - Read Configuration Reference Data 106
9.3.1 Read Configuration Examples 108
9.4 Function Code 21 (15h) - Write Configuration Reference Data 110

9.4.1 Write Configuration Examples 112

10 MODBUS READ, WRITE AND OVERRIDE PARAMETERS PLUS EXCEPTION CODES 113

10.1 Overview 113
10.2 Reading Control Data 115
10.3 Miscellaneous Read Onlys 115
10.3.1 Register Addresses for Read Onlys 115
10.4 Configuration Parameters 116
10.4.1 Lock 116
10.4.2 Limit 117
10.4.3 Input 1 118
10.4.4 Options 120
10.4.5 Communications 121
10.4.6 Alarms 122
10.4.7 Display 124
10.5 Modbus RTU Exception Codes 125

11 ETHERNET TCP/IP 127

11.1 Overview 127

12 FURTHER INFORMATION 128

12.1 Modbus RTU Serial Communications 128
12.2 Modbus Messaging on TCP/IP 128
12.3 How to Apply Digital Instrumentation in Severe Electrical Noise Environments 128

13 INDEX 129

14 SALES AND SERVICE 132

Tables

Table 2-1 Condensed Specifications 8
Table 2-2 Limit Relay Contact Information 13
Table 2-3 Alarm Relay Contact Information 13
Table 2-4 Mounting Procedure 15
Table 2-5 Permissible Wiring Bundling 17
Table 2-6 Terminals for connecting a UDC to a MDI Compliant Hub or Switch 23
Table 2-7 Terminals for connecting a UDC directly to a PC utilizing a straight-through cable 23
Table 3-1 Configuration Topics 26
Table 3-2 Configuration Prompt Hierarchy 27
Table 3-3 Configuration Procedure 28
Table 3-4 LOCK Group Function Prompts 29
Table 3-5 LIMIT Group Function Prompts 30
Table 3-6 INPUT 1 Group Function Prompts 31
Table 3-7 OPTION Group Function Prompts 35
Table 3-8 Communications Group Function Prompts 37
Table 3-9 ALARMS Group Function Prompts 40
Table 3-10 DISPLY Group Function Prompts 44
Table 4-1 Procedure to Enter a Security Code 52
Table 4-2 Annunciators 53
Table 4-3 Error Messages 54
Table 4-4 Using Contact Input Option 57
Table 4-5 Procedure for Displaying Alarm Setpoints 58
Table 5-1 Voltage, Milliamp and Resistance Equivalents for Input 1 Range Values 71
Table 5-2 Equipment Needed 73
Table 5-3 Set Up Wiring Procedure for Thermocouple Inputs Using an Ice Bath 74
Table 5-4 Set Up Wiring Procedure for Thermocouple Inputs using Thermocouple Source 75
Table 5-5 Set Up Wiring Procedure for RTD Inputs 75
Table 5-6 Wiring Connections for Radiamatic, Thermocouple Differential, Millivolts or Volts (Except 0 to 10 Volts) 76
Table 5-7 Set Up Wiring Procedure for 0 to 10 Volts 77
Table 5-8 Set Up Wiring Procedure for Milliampere Inputs 78
Table 5-9 Input 1 Calibration Procedure 79
Table 5-10 Restore Input Factory Calibration 81
Table 6-1 Set Up Wiring Procedure for Auxiliary Output 84
Table 6-2 Auxiliary Output Calibration Procedure 85
Table 6-3 Restore Factory Calibration 86
Table 7-1 Procedure for Identifying the Software Version 89
Table 7-2 Procedure for Displaying the Status Test Results 90
Table 7-3 Background Tests 91
Table 7-4 Controller Failure Symptoms 93
Table 7-5 Troubleshooting Power Failure Symptoms 95
Table 7-6 Troubleshooting Latching Output Relay Failure 96
Table 7-7 Troubleshooting Alarm Relay Output Failure 96
Table 7-8 Troubleshooting a Keyboard Failure 97
Table 7-9 Troubleshooting a RS-485 Communications Failure 98
Table 7-10 Troubleshooting Auxiliary Output Failure 99
Table 7-11 Restoring Factory Configuration 100
Table 8-1 Parts Identification 102

Table 8-2 Parts Not Shown 102
Table 9-1 Integer Parameter Type 105
Table 9-2 Floating Point Parameter Type 105
Table 9-3 Register Address Format for Function Code 20 107
Table 9-4 Register Address Format for Function Code 21 111
Table 10-1 Control Data Parameters 115
Table 10-2 Miscellaneous Read Onlys 115
Table 10-3 Set-up Group Lock 116
Table 10-4 Set-up Group Limit 117
Table 10-5 Set-up Group – Input 1 118
Table 10-6 Set-up Group – Options 120
Table 10-7 Set-up Group – Communications 121
Table 10-8 Set-up Group – Alarms 122
Table 10-9 Set-up Group – Display 124
Table 10-10 Modbus RTU Data Layer Status Exception Codes 126

Figures

Figure 1-1 UDC2500 Operator Interface 2
Figure 1-2 Screen capture of Process Instrument Explorer running on a Pocket PC 4
Figure 1-3 Depiction of infrared communications 5
Figure 2-1 Model Number Interpretation 12
Figure 2-2 Mounting Dimensions (not to scale) 14
Figure 2-3 Mounting Method 15
Figure 2-4 Composite Wiring Diagram 18
Figure 2-5 Mains Power Supply 19
Figure 2-6 Input 1 Connections 20
Figure 2-7 Electromechanical Relay Output 21
Figure 2-8 Solid State Relay Output 21
Figure 2-9 Open Collector Output 22
Figure 2-10 RS-422/485 Communications Option Connections 22
Figure 2-11 Ethernet Communications Option Connections 23
Figure 2-12 Auxiliary Output and Digital Inputs Option Connections 24
Figure 2-13 Transmitter Power for 4-20 mA — 2 wire Transmitter Using Open Collector Alarm 2 Output 24
Figure 2-14 Transmitter Power for 4-20 mA — 2 Wire Transmitter Using Auxiliary Output 25
Figure 2-15 Limit Controller Application Diagram 25
Figure 3-1 Ethernet Configuration Screen 46
Figure 3-2 Email Configuration Screen 47
Figure 4-1 Operator Interface 51
Figure 4-2 Maintenance Data Menu 59
Figure 4-2 Loop Data Maintenance Screen 60
Figure 4-3 Alarm Details Maintenance Screen 61
Figure 4-4 Status Data Maintenance Screen 63
Figure 4-5 Ethernet Status Maintenance Screen 64
Figure 4-6 IR Communications Address 65
Figure 4-7 Configuration Upload in Progress 66
Figure 4-8 Ethernet Communications Type Selection 67
Figure 4-9 Ethernet Communications Address 68
Figure 4-10 Configuration Upload in Progress 69
Figure 5-1 Input 1 Wiring Terminals 73
Figure 5-2 Wiring Connections for Thermocouple Inputs Using an Ice Bath 74
Figure 5-3 Wiring Connections for Thermocouple Inputs Using Thermocouple Source 75
Figure 5-4 Wiring Connections for RTD (Resistance Thermometer Device) 75
Figure 5-5 Wiring Connections for Radiamatic, Millivolts, Volts or Thermocouple Differential (Except 0 to 10 Volts) 76
Figure 5-6 Wiring Connections for 0 to 10 Volts 77
Figure 5-7 Wiring Connections for 0 to 20 mA or 4 to 20 mA Inputs 78
Figure 6-1 Wiring Connections for Calibrating Auxiliary Output 84
Figure 8-1 UDC2500 Exploded View 101

1 Introduction

1.1 Overview

Function

UDC2500 Limit Controllers accept input signals from any of several types of external sensors such as Thermocouples (T/Cs) and Resistance Temperature Detectors (RTDs). It conditions these signals, as necessary, to derive the equivalent Process Variable (PV) value that drives various circuits in the controller.

The equivalent PV signal is compared with the Limit control set point and any error signal from the differential amplifier de-energizes the coil of an electromechanical, single-pole, dual-throw (SPDT) limit output relay.

When de-energized, the output relay "Locks Out" and remains that way until the PV input signal drops below the High Limit Set Point or goes above the Low Limit Set Point and the controller is reset manually via the keyboard or from a remote location (Contact Input Option).

The contact of the output relay terminates at the rear terminal of the controller to which you make the appropriate field wiring connections.

A flashing "LIMIT" in the lower display indicates that the output relay is de-energized.

Features

- 90 – 264 Vac or 24 Vac/dc Power Supply
- Input/Output Isolation
- Isolated Auxiliary Current Output / Digital Inputs
- Modbus® RS-485 or Ethernet TCP/IP Communications

High Limit Controller

When the PV input signal is below the limit set point, the output relay energizes. If the PV signal exceeds the limit set point, the output relay de-energizes and the flashing "LIMIT" display is turned on.

When the PV signal returns to a value below the limit set point, the controller can be reset manually using the RESET key or Contact Input Option.

Low Limit Controller

When the PV input signal is above the limit set point, the output relay energizes. If the PV signal falls below the limit set point, the output relay de-energizes and the flashing "LIMIT" display is turned on.

When the PV signal returns to a value above the limit set point, the controller can be reset manually using the RESET key or Contact Input Option.

Easy to read displays

The dedicated vacuum fluorescent displays with multi-language prompts make the operator interface easy to read, understand and operate. Programmed sequences of displays assure quick and accurate entry of all configurable parameters.

Easy to operate

Simple keystrokes let you select input and range configuration, set the operating parameters that meet you process control needs now, and change them later to meet new ones.

Mount anywhere

This instrument is intended for industrial control applications. It must be panel mounted with the wiring terminals enclosed within the panel. The instrument is environmentally hardened and, when suitably enclosed, can be mounted anywhere in plant or factory, on the wall, or even on the process machine itself. The front face is NEMA3 and IP55 rated and can be easily upgraded to NEMA4X and IP66 for the most severe hose-down applications. It withstands ambient temperatures up to 55°C (133°F) and resists the effects of vibration and shock.

Figure 1-1 UDC2500 Operator Interface

1.1.1 Function of keys

Table 1-1 shows each key on the operator interface and defines its function.

Table 1-1 Function of Keys

Key	Function
Setup	□ □laces the controller in the Con□ig□ration □et □p gro□p select □o□e□ □e□□entiall□ □ispla□s □et □p gro□ps an□ allo□s the □□□C□□□ □e□to □ispla□in□i□i□□al □nctions in each □et □p gro□p□
Function	□ □se□ in con□nction □ith the □□□ □□ □e□to select the in□i□i□□al □nctions o□ a selecte□ Con□ig□ration □et □p gro□p□ □ □se□ □□ring □iel□ cali□ration proce□□re□
Lower Display	□ □elects an operating para□eter to □e sho□n in the lo□er □ispla□□
M-A Reset	**MAN-AUTO** □his □nction is not a□aila□le on the □i□it Controller□ **RESET** □eset the □i□it □ela□□
SP Select	□his □e□□oes not □nction on the □i□it Controller
Run Hold	□ □c□no□le□ges a latche□ alar□ 1□ □ □c□no□le□ges Diagnostic Messages□
▲	□ □ncreases the selecte□ para□eter □al□e□
▼	□ Decreases the selecte□ para□eter □al□e□

1.2 Process Instrument Explorer Software

Overview

Process Instrument Explorer lets you configure your instrument on a desktop/laptop or Pocket PC. For details see Process Instrument Explorer manual #51-52-25-131.

Features

- Create configurations with intuitive software program running on either a Pocket PC, a Desktop or a laptop computer. ·
- Create/edit configurations live, just connect software to controller via comm port.·
- Create/edit configurations offline and download to controller later via comm. port.·
- Port types available on every UDC2500:·
  - infrared,·
  - RS 485,
  - Ethernet.
- Same port types on UDC3200 and UDC3500 allow interconnectivity.
- This software is available in English, Spanish, Italian, German and French.

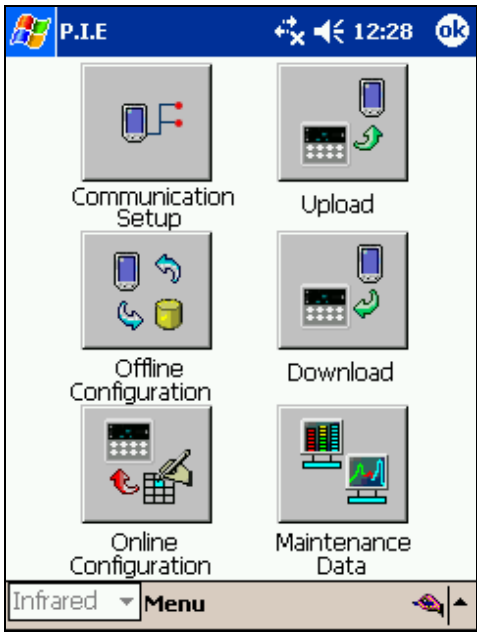

Figure 1-2 Screen capture of Process Instrument Explorer running on a Pocket PC

Infrared communications

The infrared connection provides a non-intrusive wireless connection with the instrument and maintains NEMA4X AND IP66 integrity.

No need to get access to the back of the controller to communicate with the instrument, no need to take your screw driver to wire the communication cable, no wiring mistake possible. You can now duplicate an instrument's configuration, upload or download a new configuration in a matter of seconds, just by pointing your Pocket PC in the direction of the instrument.

It takes just a few seconds to upload a configuration from an instrument. You can then save the configuration file onto your PC or pocket PC for review, modification or archiving. Furthermore, this software also gives you important maintenance information on the controller : instantly, get information on the current operating parameters, digital inputs and alarm status, identify internal or analog input problems.

Question: What if I have several controllers on the same panel? How can I be sure I am communicating with the correct one?

Answer: The infrared port of the controller is normally "off". You activate the infrared port by pressing any controller's key. You can now communicate. After 4 minutes, the port will be shut down again. Also, in the Communications Group "IR ENABLE" may be disabled to prohibit IR communications.

Figure 1-3 Depiction of infrared communications

1.3 CE Conformity (Europe)

This product is in conformity with the protection requirements of the following European Council Directives: **73/23/EEC**, the Low Voltage Directive, and **89/336/EEC**, the EMC Directive. Conformity of this product with any other "CE Mark" Directive(s) shall not be assumed.

Product Classification: Class I: Permanently connected, panel-mounted Industrial Control Equipment with protective earthing (grounding) (EN61010-1).

Enclosure Rating: This controller must be panel-mounted with the rear terminals enclosed within the panel. The front panel of the controller is rated at NEMA4X and IP66 when properly installed.

Installation Category (Overvoltage Category): Category II (EN61010-1)

Pollution Degree: Pollution Degree 2: Normally non-conductive pollution with occasional conductivity caused by condensation. (Ref. IEC 664-1)

EMC Classification: Group 1, Class A, ISM Equipment (EN61326, emissions), Industrial Equipment (EN61326, immunity)

Method of EMC Assessment: Technical File (TF)

Declaration of Conformity: 51453655

Deviation from the installation conditions specified in this manual, and the special conditions for CE conformity in Subsection 2.6, may invalidate this product's conformity with the Low Voltage and **EMC** Directives.

□□□□□□□□□

The emission limits of EN61326 are designed to provide reasonable protection against harmful interference when this equipment is operated in an industrial environment. Operation of this equipment in a residential area may cause harmful interference. This equipment generates, uses, and can radiate radio frequency energy and may cause interference to radio and television reception when the equipment is used closer than 30 meters (98 feet) to the antenna (e). In special cases, when highly susceptible apparatus is used in close proximity, the user may have to employ additional mitigating measures to further reduce the electromagnetic emissions of this equipment.

W□□□□□□

If this equipment is used in a manner not specified by the manufacturer, the protection provided by the equipment may be impaired.

2 Installation

2.1 Overview

Introduction

Installation of the UDC2500 consists of mounting and wiring the controller according to the instructions given in this section. Read the pre-installation information, check the model number interpretation (Subsection 2.3), and become familiar with your model selections, then proceed with installation.

What's in this section?

The following topics are covered in this section.

TOPIC	See Page
2.1 Overview	7
2.2 Condensed Specifications	8
2.3 Model Number Interpretation	11
2.4 Control and Alarm Relay Contact Information	13
2.5 Mounting	14
2.6 Wiring	16
2.7 Wiring Diagrams	18
Composite Wiring Diagram	18
AC Line Voltage	19
Input 1 Connections	20
Relay Output	
Electromechanical	21
Solid State	21
Open Collector	22
RS-422/485 Communications Option	22
Ethernet Communications Option	23
Auxiliary Output and Digital Inputs Option	24
Transmitter Power using Open Collector Output	24
Transmitter Power using Auxiliary Output	25
2.8 Limit Control Application Diagram	25

Pre-installation Information

If the controller has not been removed from its shipping carton, inspect the carton for damage then remove the controller.

- Inspect the unit for any obvious shipping damage and report any damage due to transit to the carrier.
- Make sure a bag containing mounting hardware is included in the carton with the controller.
- Check that the model number shown on the inside of the case agrees with what you have ordered.

2.2 Condensed Specifications

Honeywell recommends that you review and adhere to the operating limits listed in Table 2-1 when you install your controller.

Table 2-1 Condensed Specifications

Analog Inputs	*Accuracy:* □0□25□ o□□□ll scale t□pical □□1 □igit □or □ispla□□ Can □e □iel□ cali□rate□ to □0□05□ o□□□ll scale t□pical 1□□□it resol□tion t□pical *Sampling* □ate□Both inp□ts are sa□ple□ six ti□es per secon□ *Temperature Stability:* □ 0□01□ o□□□ll □cale span □□C change□ t□pical *Input Impedance:* 4□20 Millia□pere □np□t□250 oh□s 0□10 □olt □np□t□200□ oh□s □ll □thers□10 □egoh□s *Maximum Lead Wire Resistance:* □her□oco□ples□50 oh□s□leg 100 oh□, 200 oh□ an□ 500 oh□ □□D□100 oh□s□leg 100 oh□ □o□ □□D□10 oh□s□leg
Analog Input Signal Failure Operation	*Burnout Selections:* □pscale, Do□nscale *Thermocouple Health:* □oo□, □ailing, □ail□re □□□inent or □aile□
Stray Rejection	**Common Mode** *AC (50 or 60 Hz):* 120 □B □□ith □axi□ □□ so□rce i□pe□ance o□100 oh□s□or □1 □□B □least signi□icant □it□□hiche□er is greater □ith line □oltage applie□□ *DC:* 120 □B □□ith □axi□ □□ so□rce i□pe□ance o□100 oh□s□or a □1 □□B □hiche□er is greater □ith 120 □□c applie□□ *DC (to 1 KHz):* 80 □B □□ith □axi□ □□ so□rce o□i□pe□ance o□100 oh□s□or □1 □□B □hiche□er is greater □ith 50 □ac applie□□ **Normal Mode** *AC (50 or 60 Hz):* □0 □B □□ith 100 □ span pea□□to□pea□□ axi□ □□ □
Digital Inputs (One) (Optional)	□30 □□c so□rce □or external □r□contacts or isolate□ soli□ state contacts□Digital □np□ts are isolate□ □ro□ line po□er, earth gro□n□, analog inp□ts an□ all o□tp□ts except □or the □econ□ C□rrent □□tp□t□

Installation

Controller Output Types	**Electromechanical Relay** SPDT contacts. Both Normally Open and Normally Closed contacts are brought out to the rear terminals. Internally socketed. *Resistive Load:* 5 amps @ 120 Vac or 240 Vac or 30 Vdc *Inductive Load (cosφ = 0.4):* 3 amps @ 130 Vac or 250 Vac *Inductive Load (L/R = 7 msec):* 3.5 amps @ 30 Vdc *Motor:* 1/6 H.P. **Solid State Relay** Zero-crossing type SPST solid state contacts consisting of a triac N.O. output. Internally socketed. *Resistive Load:* 1.0 amp @ 25°C and 120 or 240 Vac, 0.5 amp @ 55°C and 120 or 240 Vac *Inductive Load:* 50 VA @ 120 Vac or 240 Vac *Minimum Load:* 20 milliamps **Open Collector Outputs (One or Two)** Socketed assembly replacing a relay. Opto-isolated from all other circuits except current output and not from each other. Internally powered @ 30 Vdc. Note: Applying an external power supply to this output will damage the instrument. *Maximum Sink Current:* 20 mA *Short-circuit current limit:* 100 mA
Alarm Outputs (Optional)	**One or two SPDT Electromechanical relays.** Up to four setpoints are independently set as high or low alarm, two for each relay. Setpoint can be on Process Variable, Deviation, PV Rate, Communication Shed or Thermocouple Health. A single adjustable hysteresis of 0.0 to 100.0% is provided. *Alarm Relay Contacts Rating:* Resistive Load: 5 amps at 120 Vac or 240 Vac or 30 Vdc
Isolation (Functional)	*Analog Inputs:* are isolated from all other circuits at 850Vdc for 2 seconds, but not from each other. *Analog Outputs:* are isolated from all other circuits at 850Vdc for 2 seconds. *AC Power:* is electrically isolated from all other inputs and outputs to withstand a HIPOT potential of 1900Vdc for 2 seconds per Annex K of EN61010-1. *Relay Contacts:* With a working voltage of 115/230 Vac, are isolated from each other and all other circuits at 345Vdc for 2 seconds.
RS422/485 Modbus RTU Communications Interface (Optional)	*Baud Rate:* 4800, 9600, 19,200 or 38,400 baud selectable *Data Format:* Floating point or integer *Length of Link:* 2000 ft (600 m) max. with Belden 9271 Twinax Cable and 120 ohm termination resistors 4000 ft. (1200 m) max. with Belden 8227 Twinax Cable and 100 ohm termination resistors *Link Characteristics:* Two-wire, multi-drop Modbus RTU protocol, 15 drops maximum or up to 31 drops for shorter link length.
Ethernet TCP/IP Communications Interface (Optional)	*Type:* 10Base-T *Length of Link:* 330 ft. (100 m) maximum *Link Characteristics:* Four-wire, single drop, five hops maximum *IP Address:* IP address is 10.0.0.2 as shipped from the factory *Recommended network configuration:* Use Switch rather than Hub in order to maximize UDC Ethernet performance
Infrared Communications (Optional)	*Type:* Serial Infrared (SIR) *Length of Link:* 3 ft. (1 m) maximum for IrDA 1.0 compliant devices *Baud Rate:* 19,200 or 38,400 baud selectable
Power Consumption	20 VA maximum (90 to 264 Vac) 15 VA maximum (24 Vac/dc)
Power Inrush Current	10A maximum for 4 ms (under operating conditions), reducing to a maximum of 225 mA (90 to 264 Vac operation) or 750 mA (24 Vac/dc operation) after one second. **CAUTION** When applying power to more than one instrument, make sure that sufficient power is supplied. Otherwise, the instruments may not start up normally due to voltage drop from the inrush current.
Weight	3 lbs. (1.3 kg)

3/07 UDC2500 Universal Digital Limit ControllerProduct Manual 9

Environmental and Operating Conditions				
Parameter	**Reference**	**Rated**	**Operative Limits**	**Transportation and Storage**
Ambient Temperature	25 □ 3 □C □□ □ 5 □□	15 to 55 □C 58 to 131 □□	0 to 55 □C 32 to 131 □□	□40 to □□ □C □40 to 151 □□
Relative Humidity	10 to 55□	10 to □0□	5 to □0□	5 to □5□
Vibration □re□□enc□ □□ □□ □cceleration □g□	 0 0	 0 to □0 0□4	 0 to 200 0□□	 0 to 200 0□5
Mechanical Shock □cceleration □g□ D□ration □□ s□□	 0 0	 1 30	 5 30	 20 30
Line Voltage (Vdc)	□24 □ 1	22 to 2□	20 to 2□	□□
Line Voltage (Vac) **90 to 240 Vac** **24 Vac**	 120 □ 1 240 □ 2 24 □ 1	 □0 to 240 20 to 2□	 □0 to 2□4 20 to 2□	 □□ □□ □□
Frequency (Hz) □□or □ac□	50 □ 0□2 □0 □ 0□2	4□ to 51 5□ to □1	48 to 52 58 to □2	□□ □□

□ □he □axi□ □□ □oist□re rating onl□applies □p to 40 □C □104 □□□□□or higher te□ perat□res, the □□ speci□ication is □erate□ to □aintain constant □oist□re content□

2.3 Model Number Interpretation

Introduction

Write your controller's model number in the spaces provided below and circle the corresponding items in each table. This information will also be useful when you wire your controller.

KEY NUMBER - UDC2500 Single Loop Controller

Description	Selection	Availability
Digital Controller for use with 0 to 24 ac power	DC2500	↓
Digital Controller for use with 24 ac/dc power	DC2501	↓

TABLE I - Specify Control Output and/or Alarms

		Selection	Availability DC2500 ↓	Availability 2501 ↓
Output 1	Electro Mechanical Relay (5 Amp Form C)	0	•	•
	Solid State Relay (1 Amp)	0	•	•
	Open Collector transistor output	0	•	•
Output 2 and Alarm 1 or Alarms 1 and 2	No Additional Outputs or Alarms	0	•	•
	One Alarm Relay (5 Amp Form C Contacts Alarm 1 (5 Amp Form C Relay)	B	•	•
	Solid State Relay (1 Amp Contacts Alarm 1 (5 Amp Form C Relay)	0	•	•
	Open Collector Contacts Alarm 1 (5 Amp Form C Relay)	0	•	•

TABLE II - Communications and Software Selections

		Selection	Availability DC2500 ↓	Availability 2501 ↓
Communications	None	0	•	•
	Auxiliary Output/Digital Inputs (1 Max and 1 Dor 2 D)	1	•	•
	485 Modbus Slave Auxiliary Output/Digital Inputs	2	•	•
	10 BaseT Ethernet Modbus Slave Contacts Auxiliary Output/Digital Inputs	3	•	•
Software Selections	Limit Controller	0	•	•
Reserved	No Selection	0	•	•
Primary Interface	None	0	•	•
	Primary Interface Includes Can Use with a Docket C	0	•	•

TABLE III - Input 1 can be changed in the field using external resistors

		Selection	Availability DC2500 ↓	Availability 2501 ↓
Input 1	C, D, 0(5, 1(5	1	•	•
	C, D, 0(5, 1(5, 0(20, 4(20	2	•	•
	C, D, 0(5, 1(5, 0(20, 4(20, 0(10	3	•	•
Input 2	None	00	•	•

TABLE IV - Options

		Selection	Availability DC2500 ↓	Availability 2501 ↓
Approvals	C, CanC Standard	0	•	•
	C, C, CSA M	1	b	b
Tags	None	0	•	•
	Stainless Steel Customer Tag (3 lines (22 characters/line		•	•
Future Options	None	0	•	•
	None	0	•	•
	None	0	•	•

continued

TABLE V - Product Manuals

		Selection	Availability DC 2500	Availability 2501
Manuals	Product Information on CD (All Languages)	0	•	•
	English Manual (51-52-25-12)		•	•
	French Manual (51-52-25-12-FR)		•	•
	German Manual (51-52-25-12-DE)		•	•
	Italian Manual (51-52-25-12-IT)		•	•
	Spanish Manual (51-52-25-12-SP)		•	•
Certificate	None	0	•	•
	Certificate of Conformance (33-1)	C	•	•

Limit Controller Restrictions/Comments

1. FM approved units with communications are limited to read only
2. FM approved units are restricted to DC and DD type inputs
3. Listed for regulatory use only

b				
c	Input 2 not available with Limit Model			

Figure 2-1 Model Number Interpretation

Installation

2.4 Limit and Alarm Relay Contact Information

Limit Relay

ATTENTION

The limit relay is designed to operate in a failsafe mode. This results in momentary (5 seconds maximum) limit action when power is initially applied, until the unit completes self-diagnostics. If power is lost to the unit, the Limit Control Relay will still function.

Table 2-2 Limit Relay Contact Information

Unit Power	Limit Control Relay Wiring	Variable NOT in Limit State		Variable in Limit State	
		Relay Contact	Indicators	Relay Contact	Indicators
Off	N.O.	Open	**Off**	Open	**Off**
	N.C.	Closed		Closed	
On	N.O.	Closed	**Off**	Open	**On**
	N.C.	Open		Closed	

Alarm Relays

ATTENTION

Alarm relays are designed to operate in a failsafe mode (that is, de-energized during alarm sate). This results in alarm actuation when power is OFF or when initially applied, until the unit completes self-diagnostics. If power is lost to the unit, the alarms will de-energize and thus the alarm contacts will close.

Table 2-3 Alarm Relay Contact Information

Unit Power	Alarm Relay Wiring	Variable NOT in Alarm State		Variable in Alarm State	
		Relay Contact	Indicators	Relay Contact	Indicators
Off	N.O.	Open	**Off**	Open	**Off**
	N.C.	Closed		Closed	
On	N.O.	Closed	**Off**	Open	**On**
	N.C.	Open		Closed	

3/07 UDC2500 Universal Digital Limit ControllerProduct Manual 13

2.5 Mounting

Physical Considerations

The controller can be mounted on either a vertical or tilted panel using the mounting kit supplied. Adequate access space must be available at the back of the panel for installation and servicing activities.

- Overall dimensions and panel cutout requirements for mounting the controller are shown in Figure 2-2.
- The controller's mounting enclosure must be grounded according to CSA standard C22.2 No. 0.4 or Factory Mutual Class No. 3820 paragraph 6.1.5.
- The front panel is moisture rated NEMA3 and IP55 rated and can be easily upgraded to NEMA4X and IP66.

Overall Dimensions

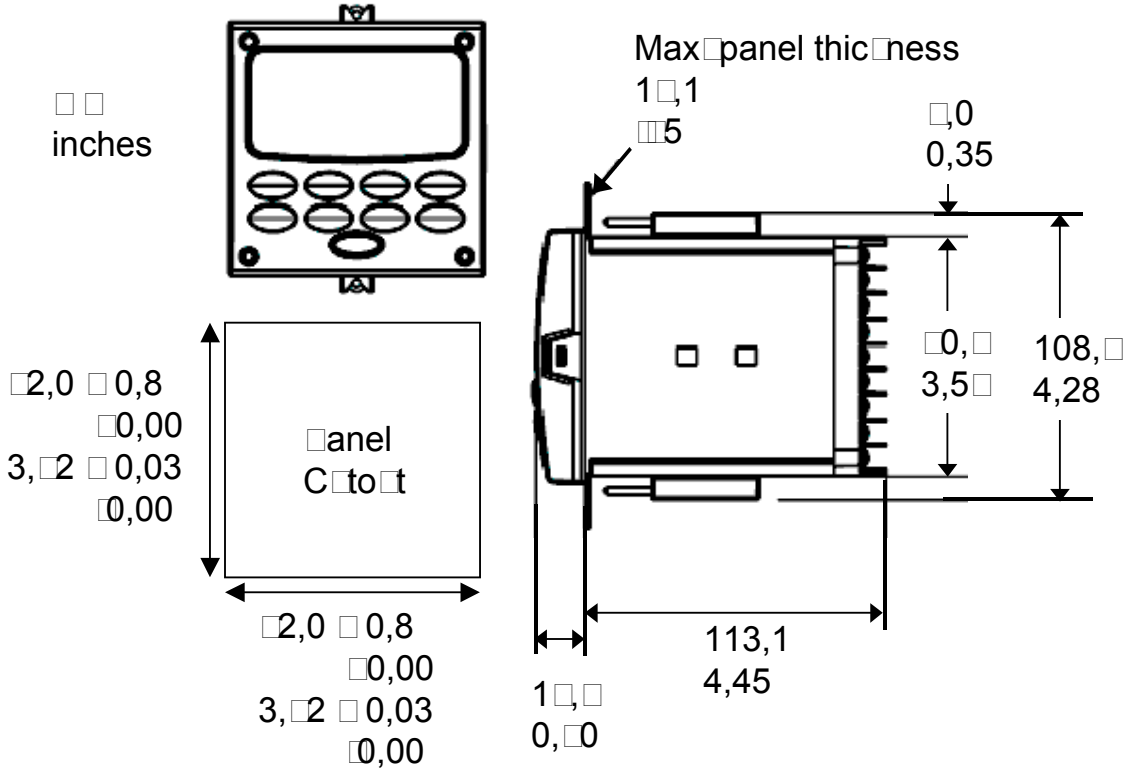

Figure 2-2 Mounting Dimensions (not to scale)

Mounting Method

Before mounting the controller, refer to the nameplate on the outside of the case and make a note of the model number. It will help later when selecting the proper wiring configuration.

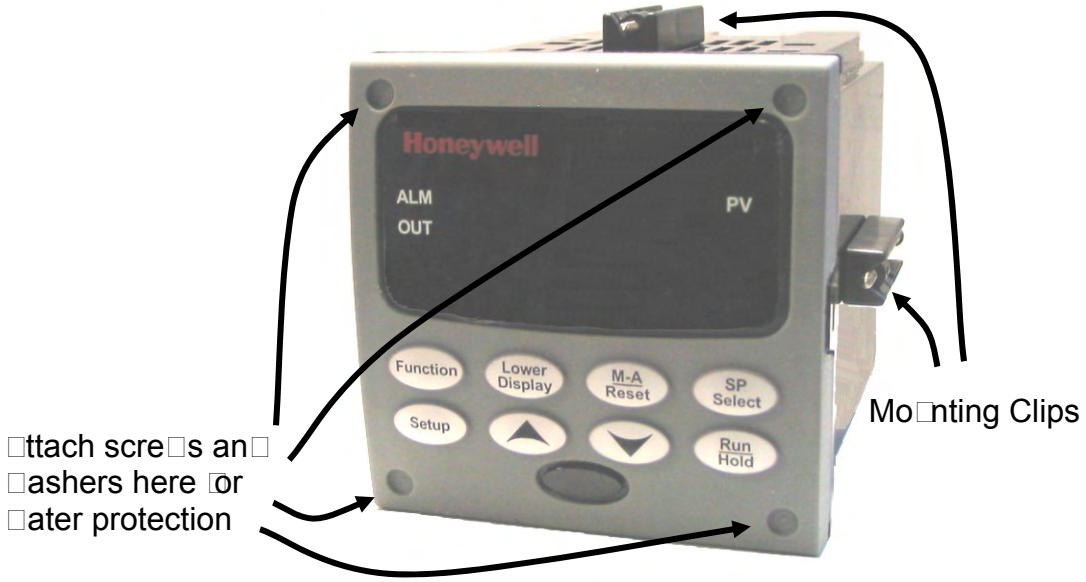

Figure 2-3 Mounting Method

Mounting Procedure

Table 2-4 Mounting Procedure

Step	Action
1	Mar□an□c□t o□t the controller hole in the panel accor□ing to the □i□ension in□or□ation in □ig□re 2□2□
2	□rient the case properl□an□sli□e it thro□gh the panel hole □ro□ the □ront□
3	□e□o□e the □o□nting □it □ro□ the shipping container an□ install the □it as □ollo□s□ • □or nor□al installation t□o □o□nting clips are re□□ire□□ □nsert the prongs o□the clips into the t□o holes in the top an□ □otto□ center o□the case □□ig□re 2□3□□ • □or □ater□protecte□ installation □o□r □o□nting clips are re□□ire□□ □here are t□o options o□□here to install the □o□nting clips□1□□nsert the prongs o□the clips into the t□o holes on the le□t an□ right si□e o□the top an□ □otto□ o□the case or 2□on the center on each o□the □o□r si□es □□ig□re 2□3□□ • □ighten scre□s to 2 l□□inch □22 □•c□ □to sec□re the case against the panel□ C□□□□□□ □□ □□er tightening □ill ca□se □istortion an□ the □nit □a□not seal properl□□
4	□or □ater□protecte□ installations, install □o□r scre□s □ith □ashers into the □o□r recesse□ areas in the corners o□the □e□el □□ig□re 2□3□□ □□sh the point o□the scre□ thro□gh the center piercing the elasto□eric □aterial an□ then tighten scre□s to 5 l□□in □5□ □•c□ □□

2.6 Wiring

2.6.1 Electrical Considerations

Line voltage wiring

This controller is considered “rack and panel mounted equipment” per EN61010-1, Safety Requirements for Electrical Equipment for Measurement, Control, and Laboratory Use, Part 1: General Requirements. Conformity with 72/23/EEC, the Low Voltage Directive requires the user to provide adequate protection against a shock hazard. The user shall install this controller in an enclosure that limits OPERATOR access to the rear terminals.

Mains Power Supply

This equipment is suitable for connection to 90 to 264 Vac or to 24 Vac/dc 50/60 Hz, power supply mains. It is the user’s responsibility to provide a switch and non-time delay (North America), quick-acting, high breaking capacity, Type F (Europe), 1/2A, 250V fuse(s), or circuit-breaker for 90-264 Vac applications; or 1 A, 125 V fuse or circuit breaker for 24 Vac/dc applications, as part of the installation. The switch or circuit-breaker shall be located in close proximity to the controller, *within easy reach of the OPERATOR*. The switch or circuit-breaker shall be marked as the disconnecting device for the controller.

CAUTION

Applying 90-264 Vac to an instrument rated for 24 Vac/dc will severely damage the instrument and is a fire and smoke hazard.

When applying power to multiple instruments, make certain that sufficient current is supplied. Otherwise, the instruments may not start up normally due to the voltage drop caused by the in-rush current.

Controller Grounding

PROTECTIVE BONDING (grounding) of this controller and the enclosure in which it is installed shall be in accordance with National and Local electrical codes. To minimize electrical noise and transients that may adversely affect the system, supplementary bonding of the controller enclosure to a local ground, using a No. 12 (4 mm^2) copper conductor, is recommended.

Control/Alarm Circuit Wiring

The insulation of wires connected to the Control/Alarm terminals shall be rated for the highest voltage involved. Extra Low Voltage (ELV) wiring (input, current output, and low voltage Control/Alarm circuits) shall be separated from HAZARDOUS LIVE (>30 Vac, 42.4 Vpeak, or 60 Vdc) wiring per Permissible Wiring Bundling, Table 2-5.

Installation

Electrical Noise Precautions

Electrical noise is composed of unabated electrical signals which produce undesirable effects in measurements and control circuits.

Digital equipment is especially sensitive to the effects of electrical noise. Your controller has built-in circuits to reduce the effect of electrical noise from various sources. If there is a need to further reduce these effects:

- *Separate External Wiring*—Separate connecting wires into bundles (See Permissible Wiring Bundling - Table 2-5) and route the individual bundles through separate conduit metal trays.
  Use Suppression Devices—For additional noise protection, you may want to add suppression devices at the external source. Appropriate suppression devices are commercially available.

ATTENTION

For additional noise information, refer to document number *51-52-05-01, How to Apply Digital Instrumentation in Severe Electrical Noise Environments.*

Permissible Wiring Bundling

Table 2-5 Permissible Wiring Bundling

Bundle No.	Wire Functions
1	• Line power wiring • Earth ground wiring • Line voltage control relay output wiring • Line voltage alarm wiring
2	**Analog** signal wire, such as: • Input signal wire (thermocouple, 4 to 20 mA, etc.) • 4-20 mA output signal wiring
3	**Digital** input signals • Low voltage alarm relay output wiring • Low voltage wiring to solid state type control circuits • Low voltage wiring to open collector type control circuits

3/07 UDC2500 Universal Digital Limit ControllerProduct Manual 17

2.7 Wiring Diagrams

Identify Your Wiring Requirements

To determine the appropriate diagrams for wiring your controller, refer to the model number interpretation in this section. The model number of the controller can be found on the outside of the case.

Wiring the Controller

Using the information contained in the model number, select the appropriate wiring diagrams from the composite wiring diagram below. Refer to the individual diagrams listed to wire the controller according to your requirements.

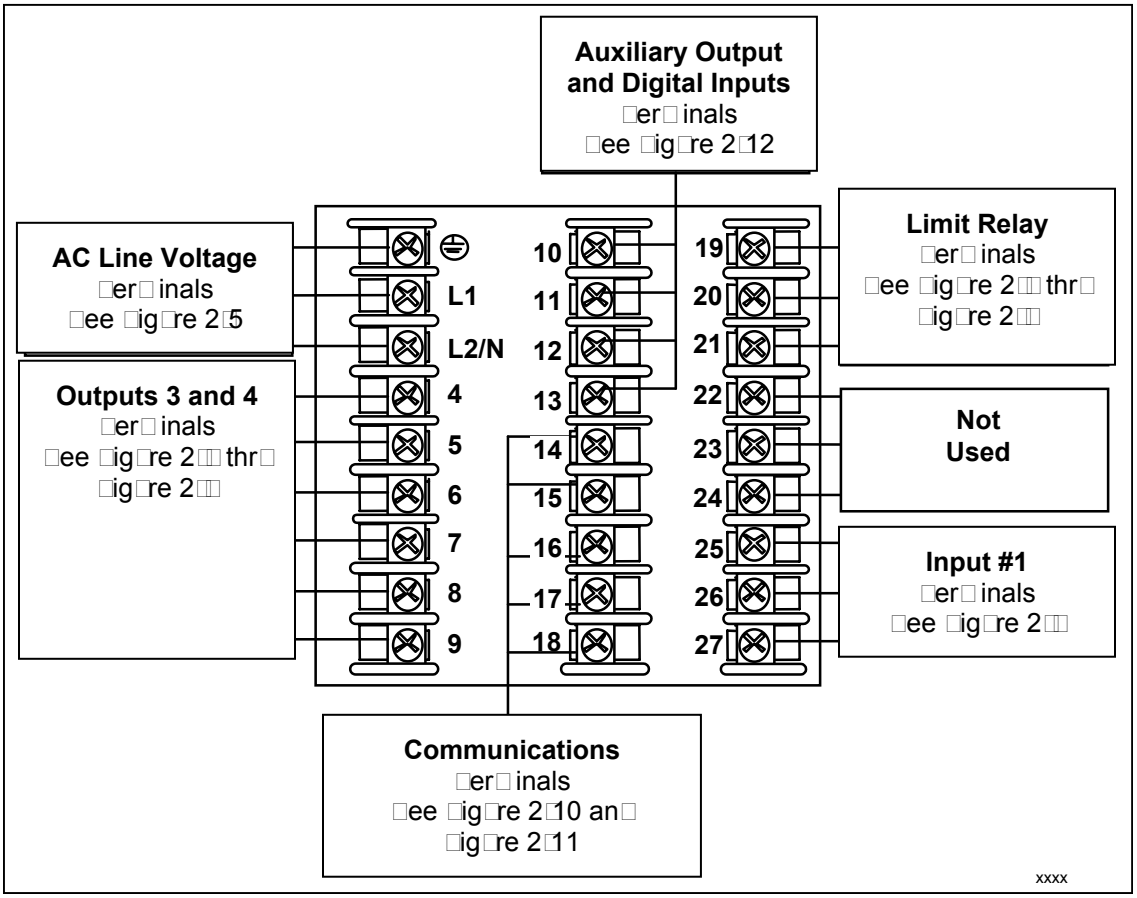

Figure 2-4 Composite Wiring Diagram

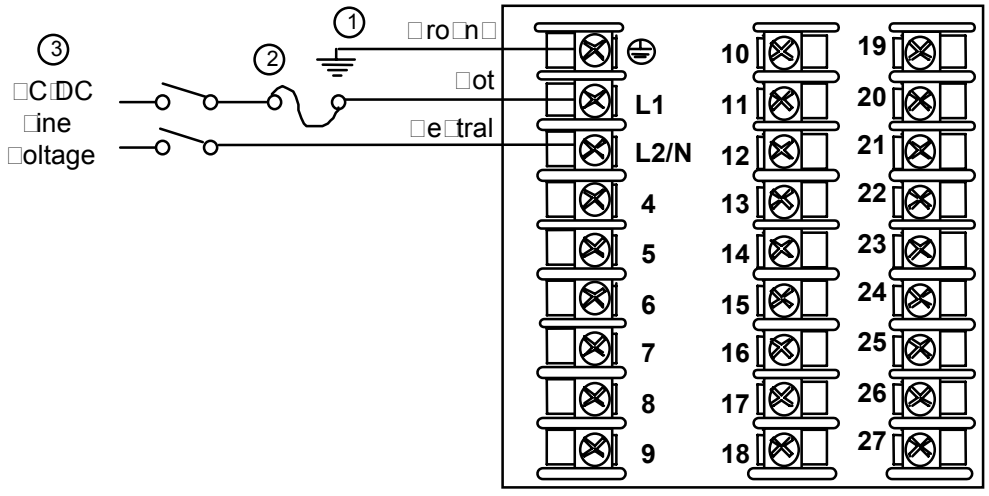

① C B D gro ning o this controller an the enclos re in hich it is installe , shall e in accor ance ith ational an local electrical co es o ini i e electrical noise an transients that a a ersel a ect the s ste , s pple entar on ing o the controller enclos re to local gro n sing a o 12 4 ^{2} copper con ctor is reco en e Be ore po ering the controller, see reli nar Chec s in this section o the ro ct Man al

② t is the ser s responsi ilit to pro i e a s itch an non ti e ela orth erica, ic acting, high rea ing capacit , pe rope , 1 2 , 250 se s , or circ it rea er or 0 2 4 ac applications or 1 , 125 se or circ it rea er or 24 ac c applications, as part o the installation

③ **CAUTION** ppl ing 0 2 4 ac to an instr ent rate or 24 ac c ill se erel a age the instr ent an is a ire an s o e ha ar

xxxx

Figure 2-5 Mains Power Supply

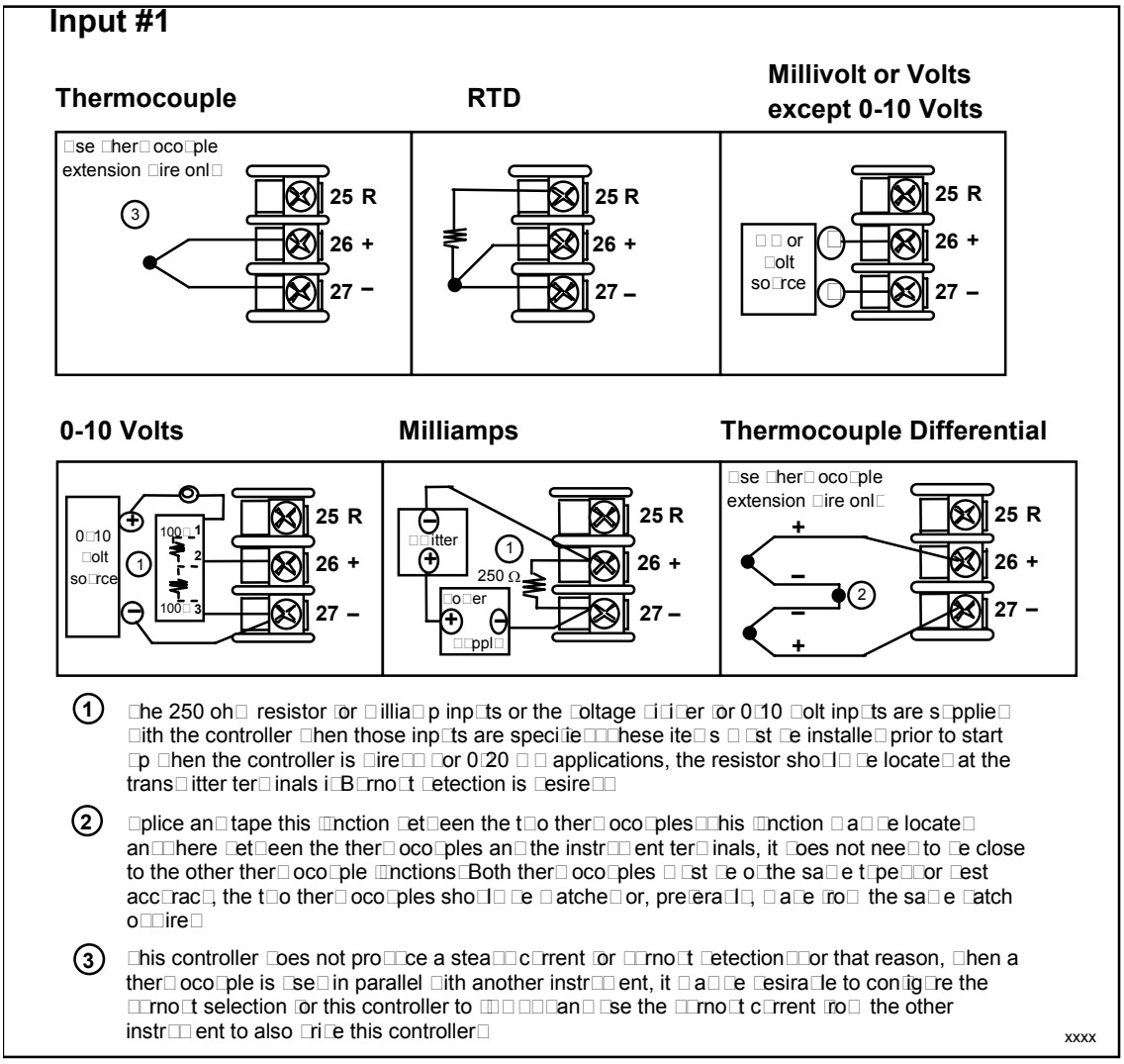

Figure 2-6 Input 1 Connections

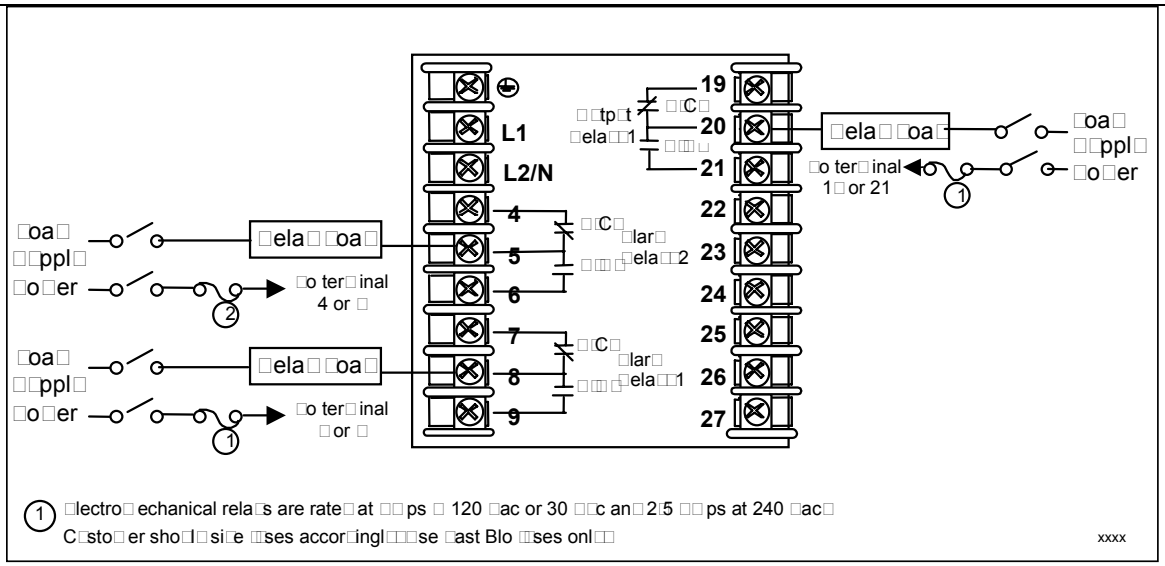

Figure 2-7 Electromechanical Relay Output

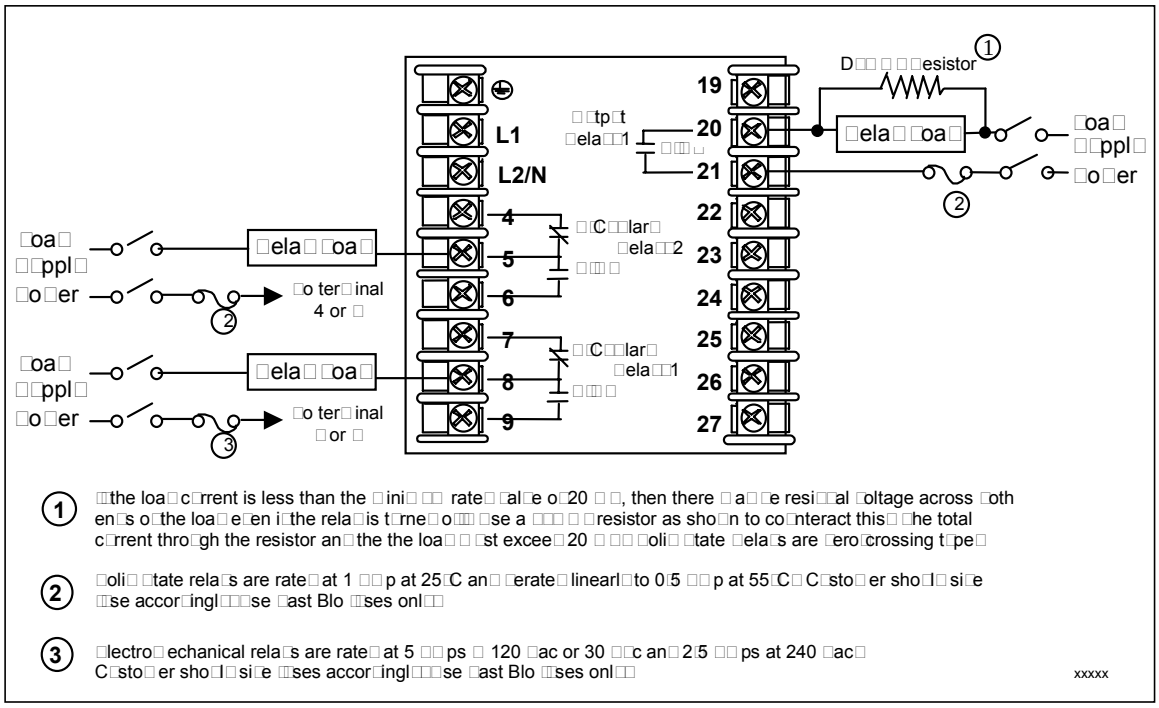

Figure 2-8 Solid State Relay Output

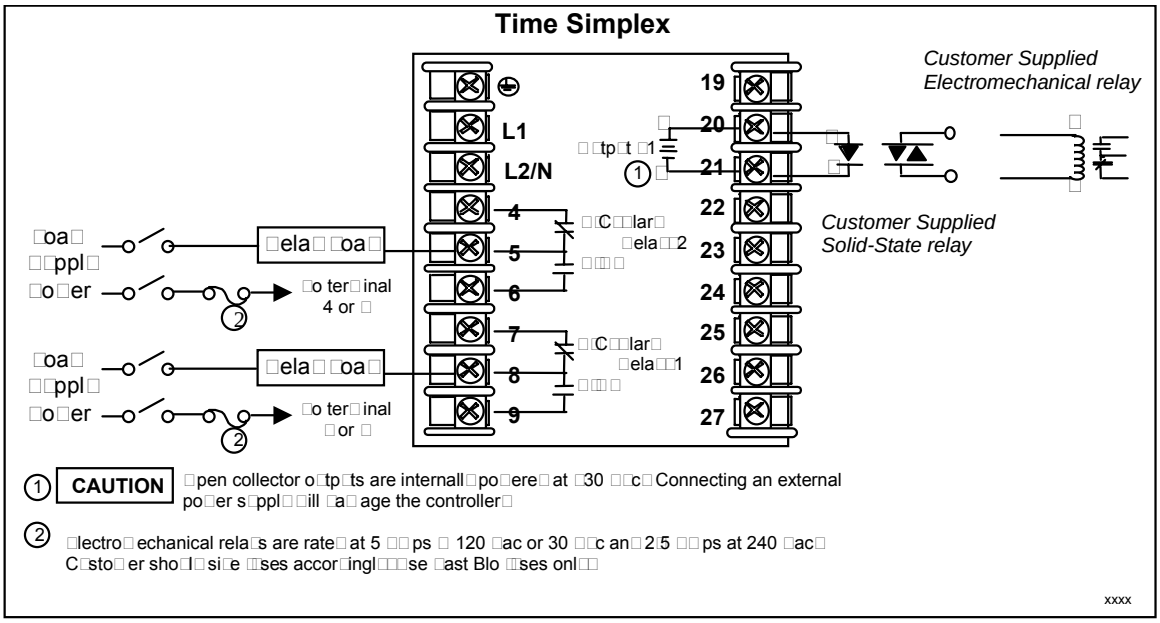

Figure 2-9 Open Collector Output

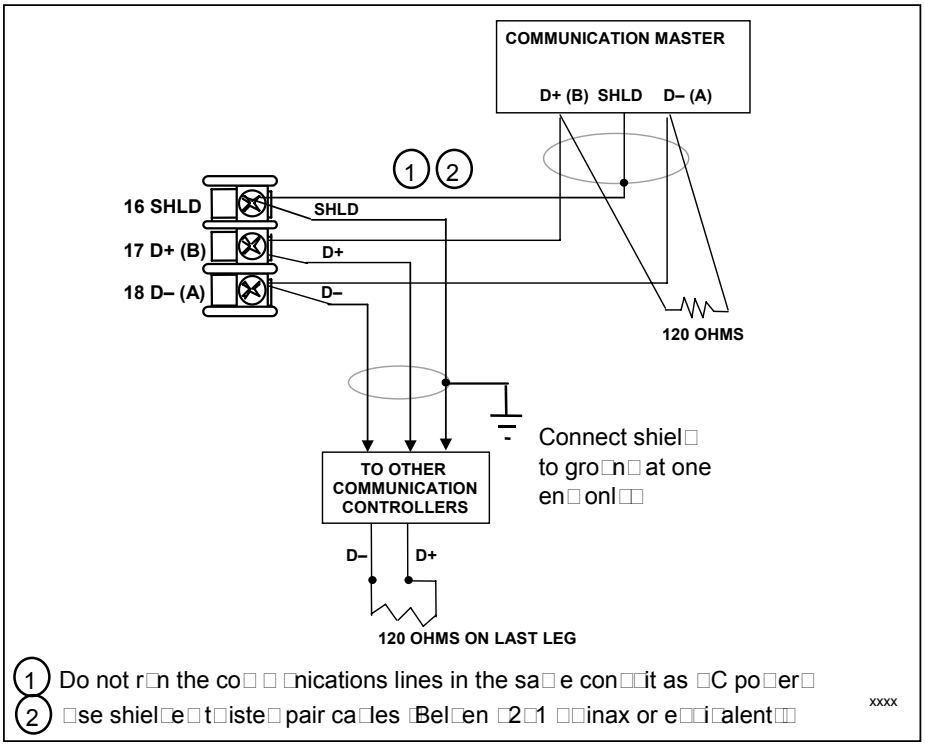

Figure 2-10 RS-422/485 Communications Option Connections

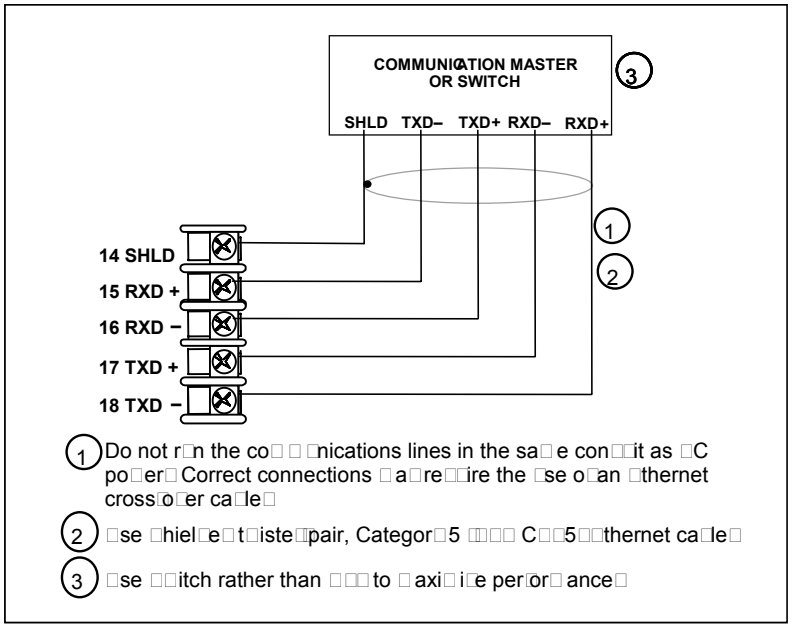

Figure 2-11 Ethernet Communications Option Connections

Figure 2-11 and Table 2-6 shows how to connect a UDC to a MDI Compliant Hub or Switch utilizing a **straight-through cable** or for connecting a UDC to a PC utilizing a **crossover cable.**

Table 2-6 Terminals for connecting a UDC to a MDI Compliant Hub or Switch

UDC Terminal	UDC Signal Name	RJ45 Socket Pin #	Switch Signal Name
Position 14	Shield	Shield	Shield
Position 15	RXD-	6	TXD-
Position 16	RXD+	3	TXD+
Position 17	TXD-	2	RXD-
Position 18	TXD+	1	RXD+

Table 2-7 shows how to connect a UDC directly to a PC utilizing a straight-through cable (wiring the UDC cable this way makes the necessary cross-over connections)

Table 2-7 Terminals for connecting a UDC directly to a PC utilizing a straight-through cable

UDC Terminal	UDC Signal Name	RJ45 Socket Pin #	PC Signal Name
Position 14	Shield	Shield	Shield
Position 15	RXD-	2	TXD-
Position 16	RXD+	1	TXD+
Position 17	TXD-	6	RXD-
Position 18	TXD+	3	RXD+

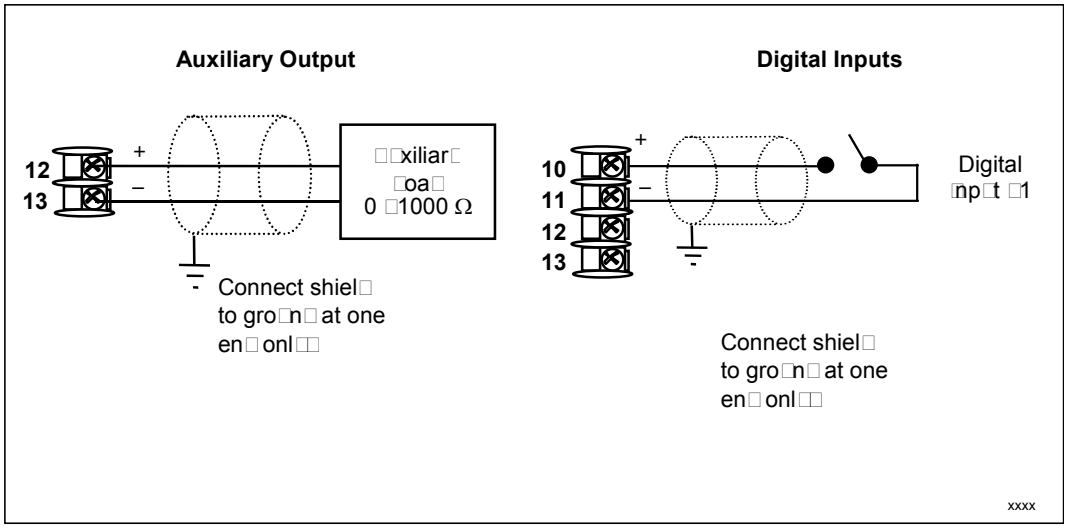

Figure 2-12 Auxiliary Output and Digital Inputs Option Connections

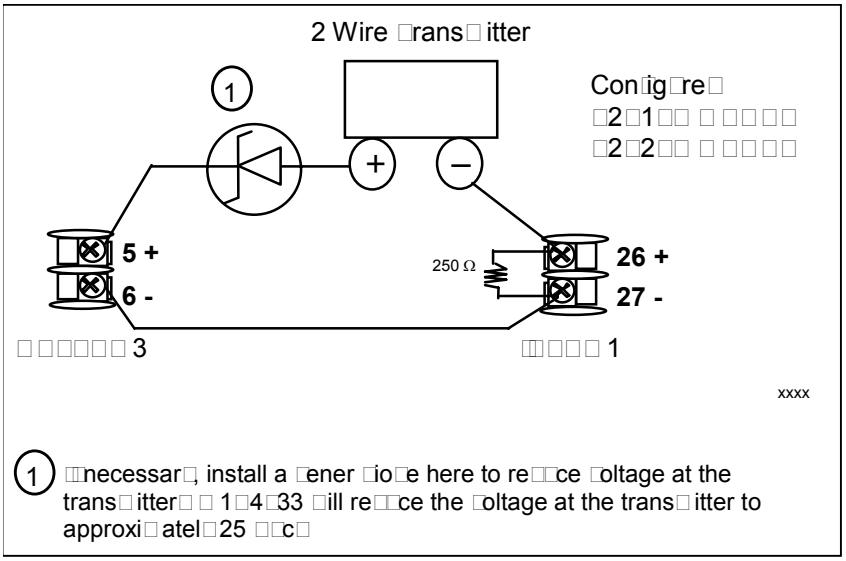

Figure 2-13 Transmitter Power for 4-20 mA — 2 wire Transmitter Using Open Collector Alarm 2 Output

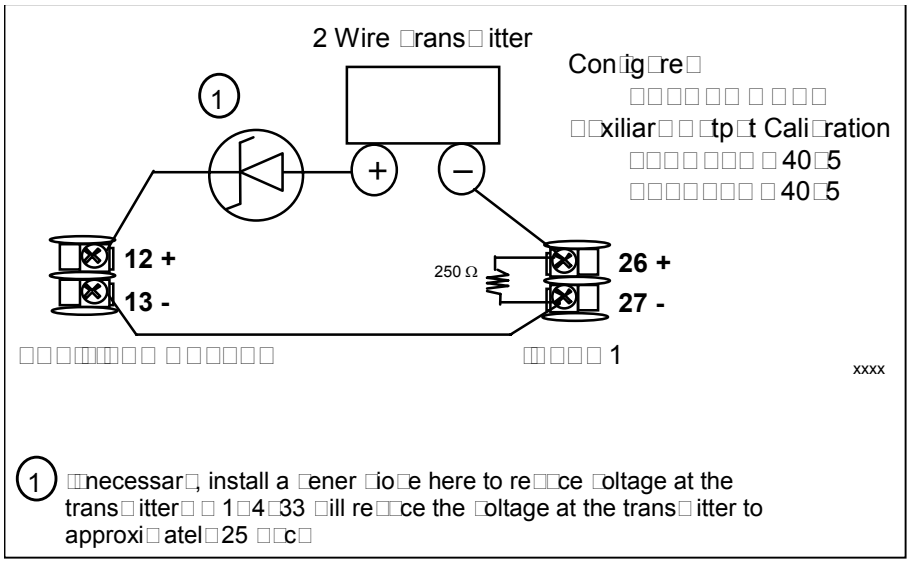

Figure 2-14 Transmitter Power for 4-20 mA — 2 Wire Transmitter Using Auxiliary Output

2.8 Limit Control Application Diagram

Limit Controller Wiring

Figure 2-15 shows the RIGHT and WRONG way to wire your Limit Controller.

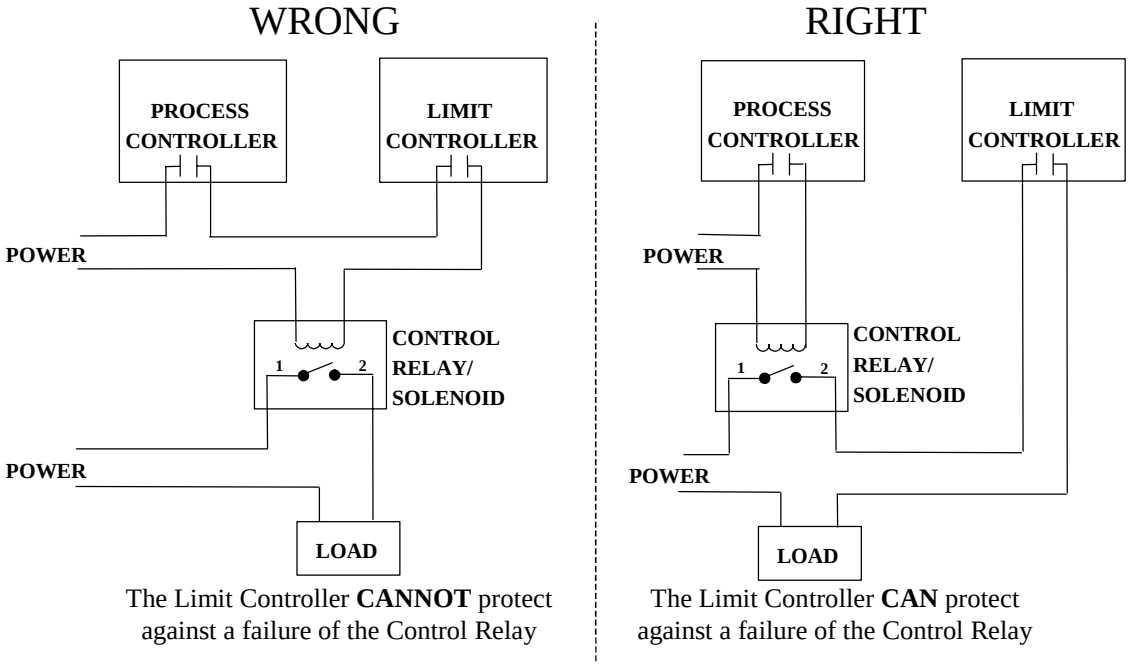

Figure 2-15 Limit Controller Application Diagram

3 Configuration

3.1 Overview

Introduction

Configuration is a dedicated operation where you use straightforward keystroke sequences to select and establish (configure) pertinent control data best suited for your application.

To assist you in the configuration process, there are prompts that appear in the upper and lower displays. These prompts let you know what group of configuration data (Set Up prompts) you are working with and also, the specific parameters (Function prompts) associated with each group.

Table 3-1 shows an overview of the prompt hierarchy as it appears in the controller.

What's in this section?

The following topics are covered in this section.

Table 3-1 Configuration Topics

TOPIC	See Page
3.1 Overview	26
3.2 Configuration Prompt Hierarchy	27
3.3 Configuration Procedure	28
3.4 Tuning Set Up Group	29
3.5 Limit Set Up Group	30
3.6 Input 1 Set Up Group	31
3.7 Options Set Up Group	35
3.8 Communications Set Up Group	37
3.9 Alarms Set Up Group	40
3.10 Display Set Up Group	44
3.11 P.I.E. Tool Ethernet and Email Configuration Screens	46
3.12 Configuration Record Sheet	49

3.2 Configuration Prompt Hierarchy

Table 3-2 Configuration Prompt Hierarchy

Set Up Group	Function Prompts
LOCK	SECUR, LOCK
LIMIT	LOorHI, POWRUP, SPMAX, SPMIN, DISPLY
INPUT1	IN1TYP, XMITR1, IN1 HI, IN1 LO, BIAS 1, FILTR1, BRNOUT, EMISS
OPTIONS	DIGIN1, AUXOUT
COM	ComADR, ComSTA, IRENAB, BAUD, SDENAB, SHDTIM, BAUD, TX DLY WS FLT, UNITS, LOOPBK
ALARMS	A1S1TY, A1S1VA, A1S1HL, A1S1TY, A1S1VA, A1S1HL, A1S1TY, A1S1VA A1S1HL, A1S1TY, A1S1VA, A1S1HL, ALHYST, ALARM1, BLOCK, DIAGAL
DISPLY	DECMAL, UNITS, FREQ, LWRDSP, TCDIAG
STATUS	VERSON, FAILSF, TESTS

Configuration

3.3 Configuration Procedure

Introduction

Each of the Set Up groups and their functions are pre-configured at the factory. The factory settings are shown in Section 3.12.

If you want to change any of these selections or values, follow the procedure in Table 3-3. This procedure tells you the keys to press to get to any Set Up group and any associated Function parameter prompt.

Procedure

ATTENTION

The prompting scrolls at a rate of 2/3 seconds when the **SET UP** or **FUNCTION** key is held in. Also, ▲ or ▼ keys will move group prompts forward or backward at a rate twice as fast.

Table 3-3 Configuration Procedure

Step	Operation	Press	Result
1	Enter Set Up Mode	Setup	*Upper Display* = **SET** *Lower Display* = **LOCK** (This is the first Set Up Group title)
2	Select any Set Up Group	Setup	Sequentially displays the other Set Up group titles shown in the prompt hierarchy in Table 3-2 Configuration Prompt Hierarchy. You can also use the ▲ or ▼ keys to scan the Set Up groups in both directions. Stop at the Set Up group title that describes the group of parameters you want to configure. Then proceed to the next step.
3	Select a Function Parameter	Function	*Upper Display* = the current value or selection for the first function prompt of the selected Set Up group. *Lower Display* = the first function prompt within that Set Up group. Sequentially displays the other function prompts of the Set Up group you have selected. Stop at the function prompt that you want to change, then proceed to the next step.
4	Change the Value or Selection	▲ or ▼	Increments or decrements the value or selection that appears for the selected function prompt. If you change the value or selection of a parameter while in Set Up mode then decide not to enter it, press **M-A/RESET** once – the original value or selection is recalled.
5	Enter the Value or Selection	Function	Enters value or selection made into memory after another key is pressed.
6	Exit Configuration	Lower Display	Exits configuration mode and returns controller to the same state it was in immediately preceding entry into the Set Up mode. It stores any changes you have made. If you do not press any keys for 30 seconds, the controller times out and reverts to the mode and display used prior to entry into Set Up mode.

28 UDC2500 Universal Digital Limit ControllerProduct Manual 3/07

3.4 Lock Set Up Group

Introduction

The Lock Set Up group contains the Function parameters that will allow your controller to protect Configuration and Calibration data.

Because this group contains functions that have to do with Security and Lockout, it is best to configure this group last, after all the other configuration data has been loaded.

Function Prompts

Table 3-4 LOCK Group Function Prompts

Function Prompt □o□er Displa□	**Selection or Range of Setting** □pper Displa□	**Parameter Definition**
SECUR	0 to 40□5	When □□□C□□is con□ig□re□as □□□□□□, the □ec□rit□Co□e n□□ □er is □ispla□e□an□can □e change□ □sing the raise□lo□er □e□s
LOCK	□□□□	□□□□ □all para□eters are rea□□□rite
	C□□	C□□ □all para□eters are rea□□□rite except Cali□ration
	C□□□	C□□□ □con□ig□ration para□eters are □ea□ □nl□□no □rites per□itte□
	□□□	□□□ □ □nl□the □oc□o□t gro□p is a□aila□le □or rea□□□rite□□etpoint □al□e is □ea□ □nl□□

3.5 Limit Set Up Group

Introduction

This data deals with the type of Limit Control you want, power up Logic, setpoint high and low limits, and the default display function Prompts

Table 3-5 LIMIT Group Function Prompts

Function Prompt □o□er Displa□	Selection or Range of Setting □pper Displa□	Parameter Definition
LOorHI	□□W	□□W □□i□it Control □latching rela□ □e□ energi□es □hen □□ goes □elo□ con□ig□re□ setpoint□cannot □e reset □ntil □□ rises a□o□e con□ig□re□ setpoint an□ **M-A RESET** □e□is presse□□
	□□□□	□□□□ □□i□it Control □latching rela□ □e□ energi□es □hen □□ goes a□o□e con□ig□re□ setpoint□cannot □e reset □ntil □□ □rops □elo□ con□ig□re□ setpoint an□ **M-A RESET** □e□is presse□□
POWRUP	□□□	□□□ □a□ter po□er □o□n, the controller latching rela□ □ill ha□e to □e reset□
	□□□M	□□□M □a□ter po□er □o□n, the controller □ill operate nor□all□in the sa□e □o□e as □e□ore po□er □as re□ o□e□ □nless a li□it has □een excee□e□□□□the li□it □as latche□ at po□er □o□n, the □nit □ill □e in □□i□it□at po□er □p an□ ha□e to □e reset□
SP_MAX	0 □ to 100 □ o□inp□t in engineering □nits	□□□□ □□□□□□□□□□ □□M□□ □this selection pre□ents the setpoint □ro□ going a□o□e the □al□e selecte□ here□□he setting □ □st □e e□□al to or less than the □pper range o□the inp□t□
SP_MIN	0 □ to 100 □ o□inp□t in engineering □nits	□□W □□□□□□□□□□ □□M□□ □this selection pre□ents the setpoint □ro□ going □elo□ the □al□e selecte□ here□□he setting □ □st □e e□□al to or greater than the lo□er range o□ the inp□t□
DISPLY	□□□C	□□□C □*Process Variable* □□□ □ill □e □ispla□e□ in the □pper □ispla□□
	□□	□□ □*Setpoint* □i□con□ig□re□ the setpoint □ill □e □ispla□e□ in the □pper □ispla□□□□□□□ill appear in the lo□er □ispla□□

Configuration

3.6 Input 1 Set Up Group

Introduction

This data deals with various parameters required to configure Input 1.

Function Prompts

Table 3-6 INPUT 1 Group Function Prompts

Function Prompt Lower Display	**Selection or Range of Setting** Upper Display	**Parameter Definition**
IN1TYP		**INPUT 1 ACTUATION TYPE** – This selection determines what actuation you are going to use for Input 1.
	B	**B**– B Thermocouple
	E H	**E H**– E Thermocouple High
	E L	**E L**– E Thermocouple Low
	J H	**J H**– J Thermocouple High
	J M	**J M**– J Thermocouple Med
	J L	**J L**– J Thermocouple Low
	K H	**K H**– K Thermocouple High
	K M	**K M**– K Thermocouple Med
	K L	**K L**– K Thermocouple Low
	NNMH	**NNMH**– Ni-Ni-Moly Thermocouple High
	NNML	**NNML**– Ni-Ni-Moly Thermocouple Low
	NICH	**NICH**– Nicrosil-Nisil Thermocouple High
	NICL	**NICL**– Nicrosil-Nisil Thermocouple Low
	R	**R**– R Thermocouple
	S	**S**– S Thermocouple
	T H	**T H**– T Thermocouple High
	T L	**T L**– T Thermocouple Low
	W H	**W H**– W5W26 Thermocouple High
	W L	**W L**– W5W26 Thermocouple Low
	100H	**100H**– 100 Ohm RTD High
	100L	**100L**– 100 Ohm RTD Low
	200	**200**– 200 Ohm RTD
	500	**500**– 500 Ohm RTD
	RADH	**RADH**– Radiamatic RH
	RADI	**RADI**– Radiamatic RI
	0-20	**0-20**– 0 to 20 Milliamperes *
	4-20	**4-20**– 4 to 20 Milliamperes *
	10m	**10m**– 0 to 10 Millivolts *
	50m	**50m**– 0 to 50 Millivolts *
	100m	**100m**– 0 to 100 Millivolts *
	0-5	**0-5**– 0 to 5 Volts *
	1-5	**1-5**– 1 to 5 Volts *
	0-10	**0-10**– 0 to 10 Volts *
	TDIF	**TDIF**– Thermocouple Differential *
	PR	**PR**—PR 40-PR 20 Thermocouple
		*** These input types are not available on FM Models.**

3/07 UDC2500 Universal Digital Limit ControllerProduct Manual 31

Function Prompt □o□er Displa□	Selection or Range of Setting □pper Displa□	Parameter Definition
XMITR1	B □ □ □ □ □□ □M □□ □ □ □ M □ □ □□M□ □□M□ □□C□ □□C□ □ □ □ □ □ □ W □ W □ 100□ 100□ 200 500 □□D□ □□D□ □□□ □r□	**TRANSMITTER CHARACTERIZATION**□ □his selection lets □o□ instr□ct the controller to characteri□e a linear inp□t to represent a non□linear one□□□characteri□ation is per□or□e□ □□the trans□itter itsel□, then select □□□ □□inear□□ **ATTENTION** □ro□pt onl□ appears □hen a linear act□ation is selecte□ at pro□pt □□1 □□□□□ □□□ □□□M□□□□ □□inp□t 1 is a 4 to 20 □ □ signal, □□t the signal represents a t□pe □ □ ther□oco□ple, then con□ig□re **K H** an□ the controller □ill characteri□e the 4 to 20 □ □ signal so that it is treate□ as a t□pe □ ther□oco□ple inp□t □high range□□ □ara□eter □e□initions are the sa□e as in □□1 □□□□□ **ATTENTION** □ot a□aila□le on □M Mo□els□
IN1 HI	–□□□ to □□□□ □loating in engineering □nits	**INPUT 1 HIGH RANGE VALUE** in engineering □nits is □ispla□e□ □or all inp□ts □□t can onl□ □e con□ig□re□ □or linear or s□□are root trans□itter characteri□ation□ □cale the □1 inp□t signal to the □ispla□ □al□e □o□ □ant □or 100 □ □ □□□M□□□□ □rocess □aria□le □ □lo□ □ange o□□lo□ □ 0 to 250 □iters□Min□te □ct□ation □inp□t 1□□ 4 to 20 □ □ Characteri□ation □□M□□□□□□□ □□□□□□ □et □□1 □□□ispla□ □al□e to 250 □et □□1 □□ □ispla□ □al□e to 0 □hen 20 □ □ □ 250 □iters□Min□te an□ 4 □ □ □ 0 □iters□Min□te **ATTENTION** □he range o□ the □i□ it setpoint □ill □e li□ite□ □□the range o□□nits selecte□ here□

Configuration

Function Prompt Lower Display	**Selection or Range of Setting** Upper Display	**Parameter Definition**
IN1 LO	–999 to 9999 floating in engineering units	**INPUT 1 LOW RANGE VALUE** in engineering units is displayed for all inputs but can only be configured for linear or square root transmitter characterization. Scale the #1 input signal to the display value you want for 0 %. See example above. **ATTENTION** The control setpoint for Input 1 will be limited by the range of units selected here.
BIAS 1	–999 to 9999 floating in engineering units for non-FM Models -10 to 10 floating in engineering units for FM Models	**BIAS ON INPUT 1** – Bias is used to compensate the input for drift of an input value due to deterioration of a sensor, or some other cause. Select the bias value you want on Input 1.
FILTR1	0 to 120 seconds 0 = No filter	**FILTER FOR INPUT 1**—A software digital filter is provided for Input 1 to smooth the input signal. You can configure the first order lag time constant from 1 to 120 seconds. If you do not want filtering, enter 0.
BRNOUT		**BURNOUT PROTECTION (SENSOR BREAK)** provides most input types with upscale or downscale protection if the input fails.
	UP	**UPSCALE BURNOUT** will force the Input 1 signal to the full scale value when the sensor fails. Diagnostic message IN1 FAIL intermittently flashes on the lower display. The controller remains in Automatic control mode and adjusts the controller output signal in response to the full scale Input 1 signal developed by the Burnout circuitry.
	DOWN	**DOWNSCALE BURNOUT** will force the Input 1 signal to the lower range value when the sensor fails. Diagnostic message IN1 FAIL intermittently flashes on the lower display. **ATTENTION** For Burnout to function properly on a 0-20 mA input type (or a 0-5V type that uses a dropping resistor), the dropping resistor must be remotely located (across the transmitter terminals). Otherwise, the input at the UDC terminals will always be 0 mA (i.e., within the normal operating range) when the 0-20 mA line is opened.

3/07 UDC2500 Universal Digital Limit ControllerProduct Manual 33

Function Prompt □o□er Displa□	Selection or Range of Setting □pper Displa□	Parameter Definition
EMISS	0□01 to 1□00	**EMISSIVITY** is a correction □actor applie□ to the □a□ia□atic inp□t signal that is the ratio o□ the act□al energ□e□itte□ □ro□ the target to the energ□ □hich □o□l□ □e e□itte□i□the target □ere a per□ect ra□iator□ □□aila□le onl□ □or □a□ia□atic inp□ts□

3.7 Options Set Up Group

Introduction

The Options group lets you configure the remote mode switch (Digital Inputs) to a specific contact closure response, or configure the Auxiliary Output to be a specific selection with desired scaling.

Function Prompts

Table 3-7 OPTION Group Function Prompts

Function Prompt □o□er Displa□	**Selection or Range of Setting** □pper Displa□	**Parameter Definition**
AUXOUT		**AUXILIARY OUTPUT SELECTION** □his selection pro□i□es an □ □ o□tp□t representing one o□se□eral control para□eters□□he □ispla□ □or a□xiliar□ o□tp□t □ie□ing □ill □e in engineering □nits □or all □□t o□tp□t□□ □tp□t □ill □e □ispla□e□ in percent□ **ATTENTION** *Other prompts affected by these selections: 4mA VAL and 20mA VAL.* **ATTENTION** □ □tp□t cannot □e con□ig□re□ □hen □hree □osition □tep Control is □se□□
	□□□□	**NO AUXILIARY OUTPUT**
	□□□C	**PROCESS VARIABLE**□ □epresents the □al□e o□the □rocess □aria□le□□□ □ □np□t □x□atio□ □ Bias□
	D□□	**DEVIATION (PROCESS VARIABLE MINUS SETPOINT)**□ □epresents □100 □ to □100 □ o□the selecte□ □□ span in engineering □nits□ □ero □e□iation □ill pro□□ce a center scale □12 □ □ or 50 □ □o□tp□t□□ negati□e □e□iation e□□al in □agnit□□e to the □□xiliar□ □ □tp□t □igh □caling □actor □ill pro□□ce a lo□ en□ o□tp□t □4 □ □ or 0 □ □o□tp□t□ □ positi□e □e□iation e□□al in □agnit□□e to the □□xiliar□ □ □tp□t □o□ □caling □actor □ill pro□□ce a high en□ o□tp□t □20 □ □ or 100 □ □□ □□□ □□□M□□□□ □np□t 1 □ □□pe □ □igh □her□ oco□ple □□ range □ □300 □□ to □□00 □□ □□ span □ 1000 □□ De□iation □ange □ □1000 □□ to □1000 □□ □□xiliar□ □ □tp□t □o□ □cale □al□e □ 0□0 □□xiliar□ □ □tp□t □igh □cale □al□e □ 1000 *If PV = 500 °F and SP = 650 °F* *then Deviation Display = –150 °F, which is* *–7.5% of the Deviation Range, so* *Auxiliary Output = 50% – 7.5% = 42.5%*

Configuration

Function Prompt Lower Display	Selection or Range of Setting Upper Display	Parameter Definition
0_PCT	Value in Engineering Units	**AUXILIARY OUTPUT LOW SCALING FACTOR** – Use a value in engineering units to represent all AUX OUT parameters except output. Use value in percent (%) for output. (Output can be between –5 % and +105 %.)
100 PCT	Value in Engineering Units	**AUXILIARY OUTPUT HIGH SCALING FACTOR** – Use a value in engineering units to represent all AUX OUT parameters except output. Use a value in percent (%) for Output. (Output can be between –5 % and +105 %.)
CRANGE	4-20 0-20	**AUXILIARY OUTPUT RANGE** allows the user to easily select 4-20 mA output or 0-20 mA output operation without the need for recalibration of the instrument. **ATTENTION** Changing the Auxiliary Output Range will result in the loss of Field Calibration values and will restore Factory Calibration values.
DIGIN1		**DIGITAL INPUT 1 SELECTIONS** – All selections are available for Input 1. The controller returns to its original state when contact opens, except when overruled by the keyboard. **EXTERNAL RESET (DIGITAL INPUT)** – resets the latching relay on contact closure.
	DIS	**DIS** - Disable
	ENAB	**ENAB** - Enable

36 UDC2500 Universal Digital Limit ControllerProduct Manual 3/07

Configuration

3.8 Communications Set Up Group

Introduction

The Communications group lets you configure the controller to be connected to a host computer via Modbus® or Ethernet TCP/IP protocol.

Introduction

A controller with a communications option looks for messages from the host computer. If these messages are not received within the configured shed time, the controller will SHED from the communications link and return to stand-alone operation. You can also set the SHED output mode and setpoint recall, and communication units.

Up to 99 addresses can be configured over this link. The number of units that can be configured depends on the link length, with 31 being the maximum for short link lengths and 15 drops being the maximum at the maximum link length.

ATTENTION

FM Models cannot have parameters changed (write transactions) via communications, parameters can only be changed via the keyboard.

Function Prompts

Table 3-8 Communications Group Function Prompts

Function Prompt Lower Display	**Selection or Range of Setting** Upper Display	**Parameter Definition**
ComADR	1 to 99	**COMMUNICATIONS STATION ADDRESS** – This is a number that is assigned to a controller that is to be used with the communications option. This number will be its address. This parameter is also used for the IR communications link.
COMSTA	DIS MODB ETHR	**COMMUNICATIONS SELECTION** **DISABLE** – Disables the communications option **MODBUS** – Enable Modbus RTU communications **ETHERN** – Enable Ethernet Communications
IRENAB	DIS EnAB	**INFRARED COMMUNICATIONS – Enables/Disables the IR Port.**
BAUD	**4800** **9600** **19200** **38400**	**BAUD RATE** is the transmission speed in bits per second. **4800 BAUD** **9600 BAUD** **19200 BAUD** **38400 BAUD**

3/07 UDC2500 Universal Digital Limit ControllerProduct Manual 37

Function Prompt □o□er Displa□	Selection or Range of Setting □pper Displa□	Parameter Definition
TX_DLY	1 to 500 □illisecon□s	**TX DELAY**□ Con□ig□ra□le response□□ela□ti□er allo□s □o□ to □orce the □DC to □ela□its response □or a ti□e perio□ o□□ro□ 1 to 500 □illisecon□s co□pati□le □ith the host s□ste□ har□□are□so□t□are□□his para□eter is also □se□ □or the □□ co□ □ □nications lin□□
WS_FLT	□□ B □□BB □□ □ □□□B	De□ines □or□□□te or□er o□loating point □ata □or co□ □ □nications□B□te □al□es□ 0 1 2 3 seeeeeee e□ Where□ s □sign, e □exponent, □ □ □antissa □it 0 1 2 3 1 0 3 2 3 2 1 0 2 3 0 1
SDENAB	D□□ □n□B	**SHED ENABLE**□ Disa□les□ena□les she□ □□nctionali□□
SHDTIM	0 to 255 □a□ple □erio□s	**SHED TIME**□ □he n□□ □er that represents ho□ □an□sa□ple perio□s there □ill □e □e□ore the controller she□s □ro□ co□ □ □nications□□ach perio□ e□□als 1□3 secon□s□0 e□□als □o she□□ □ote□□□Co□ □□□ is set to M□DB□□ an□i□ □□□D□□□B is set to D□□□B□, □he□ □i□e □ill not □e con□ig□ra□le□
SHD_SP	□□□ C□□	**SHED SETPOINT RECALL** □ote□□□□□□D□□□B□D□□□B□□, this pro□pt □ill not □e con□ig□ra□le□ **TO LSP**□ Controller □ill □se last local or re□ote setpoint □se□□ **TO CSP**□ When in □sla□e□□ o□e, the controller □ill store the last host co□p□ter setpoint an□ □se it at the □ocal setpoint□When in □□ onitor□□ o□e, the controller □ill she□ to the last □DC □ocal or □e□ote setpoint □se□, an□ the □□□ is □nchange□□
UNITS	□C□ □□□	**PERCENT** **ENGINEERING UNITS**
LOOPBK	D□□	**LOCAL LOOPBACK** tests the co□ □ □nications har□□are□ **DISABLE**□ Disa□les the □oop□ac□ test□

Configuration

Function Prompt Lower Display	**Selection or Range of Setting** Upper Display	**Parameter Definition**
	ENAB	**ENABLE** – Allows loopback test. The UDC goes into Loopback mode in which it sends and receives its own message. The UDC displays PASS or FAIL status in the upper display and LOOP BACK in the lower display while the test is running. The UDC will go into manual mode when LOOP BACK is enabled with the output at the failsafe value. The test will run until the operator disables it here, or until power is turned off and on. **ATTENTION** The instrument does not have to be connected to the external communications link in order to perform this test. If it is connected, only one instrument should run the loopback test at a time. The host computer should not be transmitting on the link while the loopback test is active.

3/07 UDC2500 Universal Digital Limit ControllerProduct Manual 39

3.9 Alarms Set Up Group

Introduction

An alarm is an indication that an event that you have configured (for example—Process Variable) has exceeded one or more alarm limits. There are two alarms available. Each alarm has two setpoints. You can configure each of these two setpoints to alarm on various controller parameters.

There are two alarm output selections, High and Low. You can configure each setpoint to alarm either High or Low. These are called single alarms.

You can also configure the two setpoints to alarm on the same event and to alarm both high and low. A single adjustable Hysteresis of 0 % to 100 % is configurable for the alarm setpoint.

See Table 2-3 in the Installation section for Alarm relay contact information.

The prompts for the Alarm Outputs appear whether or not the alarm relays are physically present. This allows the Alarm status to be shown on the display and/or sent via communications to a host computer.

Function Prompts

Table 3-9 ALARMS Group Function Prompts

Function Prompt □o□er Displa□	**Selection or Range of Setting** □pper Displa□	**Parameter Definition**
A1S1TY	**NONE** **PROC** **DE** **SHED** **FSAF** **PrRT** **DI** **TC W** **TC F**	**ALARM 1 SETPOINT 1 TYPE**□ □elect □hat □o□ □ant □etpoint 1 o□□lar□ 1 to represent□ □t can represent the □rocess □aria□le, De□iation, □np□t 1, □np□t 2, □□tp□t, an□ i□□o□ ha□e a □o□el □ith co□ □ □nications, □o□ can con□ig□re the controller to alar□ on □□□D□□□ □o□ ha□e setpoint progra□ □ing, □o□ can alar□ □hen a seg□ent goes □□ or □□□□ □□ □□□□M □□□C□□□ □□□□□B□□ D□□□□□□□□ □□□D □□□M C□MM□□□C□□□□□□ □□□□□□□□ □□ □□□□ □□C□□□□□ D□□□□□□□□□□□1 □C□□□□□D □□□□M□C□□□□□ W□□□□□□□ □□□□□ 1□ □□□□M□C□□□□□ □□□□□□□□ □□□□□ 2□ □□□□□□□□□ **NOTE 1.** □her□oco□ple Warning □eans that the instr□□ent has □etecte□ that the □her□oco□ple □np□t is starting to □ail□ □ot □ali□ □or inp□t t□pes other than □her□oco□ple□
		NOTE 2. □her□oco□ple □ailing □eans that the instr□□ent has □etecte□ that the

Configuration

Function Prompt (Lower Display)	Selection or Range of Setting (Upper Display)	Parameter Definition
		Thermocouple input is in imminent danger of failing. Not valid for input types other than thermocouple.
A1S1VA	Value in engineering units	**ALARM 1 SETPOINT 1 VALUE**— This is the value at which you want the alarm type chosen in prompt A1S1TYPE to actuate. The value depends on what the setpoint has been configured to represent. No setpoint is required for alarms configured for Communications SHED. This prompt does not appear for Alarm Types that do not use Values. For example: A1S1TY = MANUAL.
A1S1HL	□□□□ LOW	**ALARM 1 SETPOINT 1 STATE**— Select whether you want the alarm type chosen in prompt □1□1□□□□ to alarm High or Low. **HIGH ALARM** **LOW ALARM**
A1S2TY		**ALARM 1 SETPOINT 2 TYPE**— Select what you want Setpoint 2 of Alarm 1 to represent. The selections are the same as A1S1TYPE.
A1S2VA	Value in engineering units	**ALARM 1 SETPOINT 2 VALUE**— This is the value at which you want the alarm type chosen in prompt A1S2TYPE to actuate. The details are the same as A1S1 VAL.
A1S2HL	HIGH LOW	**ALARM 1 SETPOINT 2 STATE**— Same as A1S1HL.
A2S1TY		**ALARM 2 SETPOINT 1 TYPE**— Select what you want Setpoint 1 of Alarm 2 to represent. The selections are the same as A1S1TYPE. **ATTENTION** Not applicable with Relay Duplex unless using Dual Relay PWA.
A2S1VA	Value in engineering units	**ALARM 2 SETPOINT 1 VALUE**— This is the value at which you want the alarm type chosen in prompt A2S1TYPE to actuate. The details are the same as □1□1 □□□□
A2S1HL	HIGH LOW	**ALARM 2 SETPOINT 1 STATE**— Same as A1S1HL.

3/07 UDC2500 Universal Digital Limit ControllerProduct Manual 41

Configuration

Function Prompt Lower Display	Selection or Range of Setting Upper Display	Parameter Definition
A2S2TY	Value in engineering units	**ALARM 2 SETPOINT 2 TYPE**– Select what you want Setpoint 2 of Alarm 2 to represent. The selections are the same as A1S1TYPE. **ATTENTION** Not applicable with Relay Duplex unless using Dual Relay PWA.
A2S2VA		**ALARM 2 SETPOINT 2 VALUE**– This is the value at which you want the alarm type chosen in prompt A2S2TYPE to actuate. The details are the same as □1□1 VA□.
A2S1HL	HIGH LOW	**ALARM 2 SETPOINT 1 STATE**– Same as A1S1HL.
ALHYST	0.0 to 100.0 % of span or full output as appropriate	**ALARM HYSTERESIS**– A single adjustable hysteresis is provided on alarms such that when the alarm is OFF it activates at exactly the alarm setpoint; when the alarm is ON, it will not deactivate until the variable is 0.0 % to 100 % away from the alarm setpoint. Configure the hysteresis of the alarms based on INPUT signals as a % of input range span. Configure the hysteresis of the alarm based on OUTPUT signals as a % of the full scale output range.
ALARM1	NO LAT LATCH	**LATCHING ALARM OUTPUT 1**– Alarm output 1 can be configured to be Latching or Non-latching. **NO LAT**– Non-latching **LATCH**– Latching **ATTENTION** When configured for latching, the alarm will stay active after the alarm condition ends until the RUN/HOLD key is pressed.

42 UDC2500 Universal Digital Limit ControllerProduct Manual 3/07

Function Prompt □o□er Displa□	Selection or Range of Setting □pper Displa□	Parameter Definition
BLOCK	D□□ □□1 □□2 □□12	**ALARM BLOCKING**□ □re□ents n□isance alar□s □hen the controller is □irst po□ere□ □p□□he alar□ is s□ppresse□ □ntil the para□eter gets to the non□alar□ li□it or □an□□□lar□ □loc□ing a□ects □oth alar□ setpoints□ **DISABLE**□ Disa□les □loc□ing **AL 1**□ Bloc□s alar□ 1 onl□ **AL 2**□ Bloc□s alar□ 2 onl□ **AL12**□ Bloc□s □oth alar□s **ATTENTION** When ena□le□ on po□er □p or initial ena□ling □ia con□ig□ration, the alar□ □ill not acti□ate □nless the para□eter □eing □onitore□ has not □een in an alar□ con□ition □or a □ini□ □□ o□one control c□cle □1□□ □s□□
DIAGAL	D□□ □□1 □□2 D□□W□□	**DIAGNOSTIC**□ Monitors the C□rrent □□tp□t an□□or □□xiliar□□□tp□t □or an open circ□it con□ition□□□either o□these t□o o□tp□ts □alls □elo□ a□o□t 3□5 □□, then an □lar□ is acti□ate□□ □his con□ig□ration is in a□□ition to □hate□er □as selecte□ □or □x□x□□□□□ **DISABLE**□ Disa□les Diagnostic □lar□ **ALARM 1**□ □lar□ 1 is □iagnostic alar□ **ALARM 2**□ □lar□ 2 is □iagnostic alar□ **DISABLE WARNING**□ Disa□les □□tp□t □ail □essage on lo□er □ispla□

3.10 Display Set Up Group

Introduction

This group includes selections for Decimal place, Units of temperature, Language and Power frequency.

Function Prompts

Table 3-10 DISPLY Group Function Prompts

Function Prompt □o□er Displa□	Selection or Range of Setting □pper Displa□	Parameter Definition
DECMAL	□□□□ □□□ □W□	**DECIMAL POINT LOCATION**□ □his selection □eter□ines □here the □eci□al point appears in the □ispla□□ **NONE**□ □o Deci□al □lace□ □ixe□, no a□to□ ranging **ONE**□ **888.8** **TWO**□ **88.88** **ATTENTION** □□to□ranging □ill occ□r □or selections o□one or t□o □eci□al places□ □or exa□ple, sho□l□the instr□□ent □e con□ig□re□ □or t□o □eci□al places an□the □□ excee□s □□□□□, then the □ispla□□ill change to a single □eci□al place so that □al□es o□100□0 an□ a□o□e can □e sho□n□
UNITS	□ C □□□□	**TEMPERATURE UNITS**□ □his selection □ill a□□ect the in□ication an□ operation□ **DEG F**□ Degrees □ahrenheit **DEG C**□ Degrees Centigra□e **NONE**□ □o □ispla□o□□nits
FREQ	□0 50	**POWER LINE FREQUENCY**□ □elect □hether □o□r controller is operating at 50 or □0 □ert□□ **ATTENTION** □or controllers po□ere□ □□ □24 □□c, this con□ig□ration sho□l□ □e set to the □C line □e□□enc□ □se□ to pro□□ce the □24 □□c s□ppl□□ □ncorrect setting o□this para□eter can ca□se nor□al □o□e noise pro□le□s in the inp□t rea□ings□
LWRDSP	□□□B D□□	**LOWER DISPLY**□ □elect □hether the □nit □ses single or □□al □ispla□□ **ENAB**□ □na□le D□al Displa□ **DIS**□ Disa□le D□al Displa□ □□ingle Displa□ □nl□□

Function Prompt □o□er Displa□	Selection or Range of Setting □pper Displa□	Parameter Definition
TCDIAG	□□□B D□□	**THERMOCOUPLE DIAGNOSTICS**□ □na□le or □isa□le □her□oco□ple □iagnostic □essages□ **ENAB**□ □na□le Diagnostic Messages **DIS**□ Disa□le Diagnostic Messages

3.11 P.I.E. Tool Ethernet and Email Configuration Screens

Introduction

These screens only appear in instruments that have Ethernet Communications. Ethernet and Email parameters can only be configured via the Process Instrument Explorer (P.I.E. Tool®). The figures in this section show screen-shots of the Configuration Screens from the PC version of the P.I.E. Tool®. Pocket PC Configuration Screens are generally similar in format but smaller.

Ethernet Configuration Screen

This controller is shipped from the factory with the IP Address set to 10.0.0.2, the Subnet Mask set to 255.255.255.0 and the Default Gateway set to 0.0.0.0. Consult your Information Technologies (IT) representative as to how these should be configured for your installation. The MAC address is printed on the product label located on the instrument's case.

These settings can be changed via the Ethernet Configuration Screen as shown in Figure 3-1.

See Section 4.9 – *Configuring your Ethernet Connection* for more information.

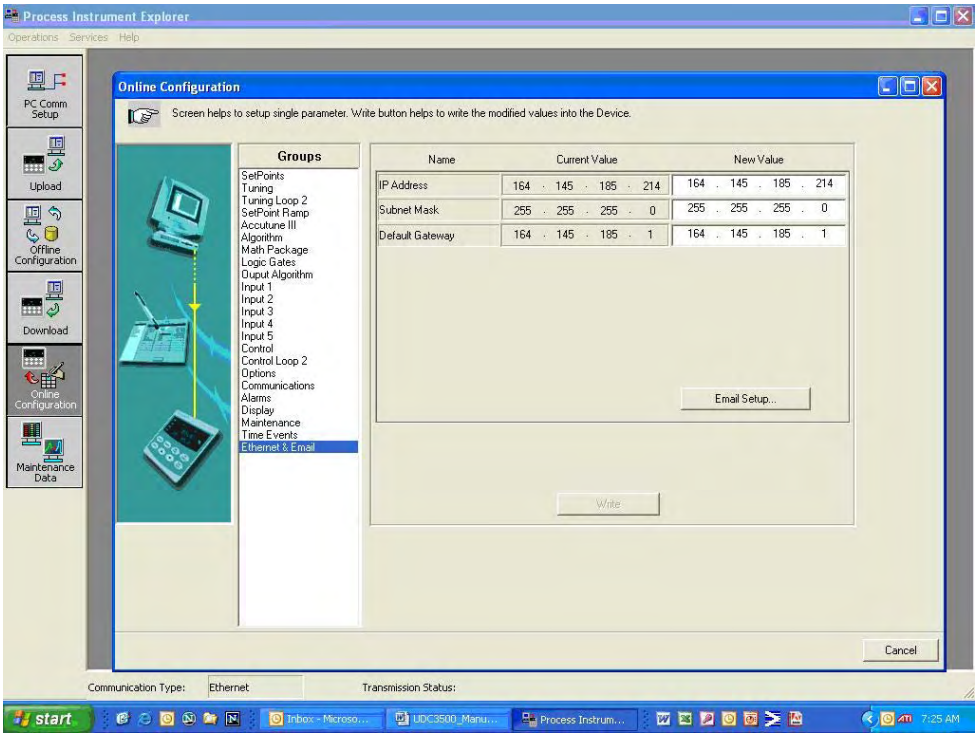

Figure 3-1 Ethernet Configuration Screen

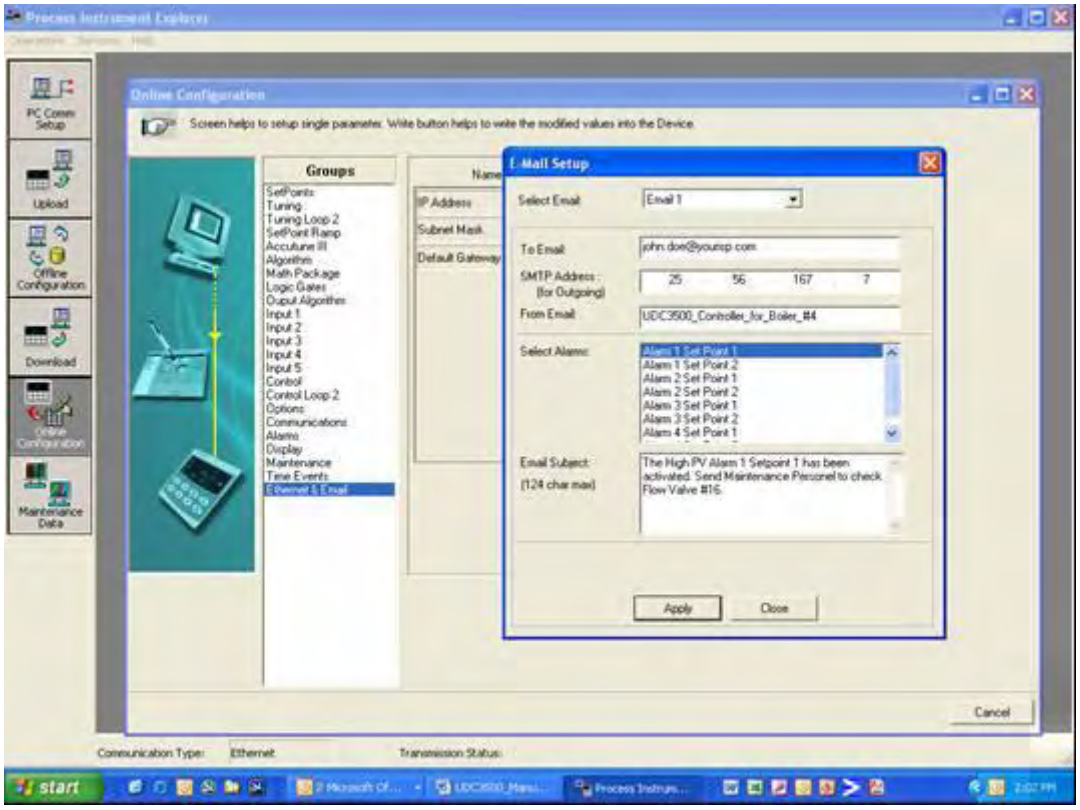

Configuration

WARNING

After you change the IP address, you will no longer be able to communicate with the instrument via Ethernet until you change the P.I.E. Tool's IP address setting in the "PC COMM SETUP" to match the setting that is now in your controller.

Email Configuration Screen

This controller may be configured to support up to two Emails. Each Email can be sent to a different address. Emails are sent only when the selected alarm transitions from the OFF to the ON state.

Process Instrument Explorer
PC Comm Setup
Upload
Offline Configuration
Download
Online Configuration
Maintenance Data
Online Configuration
Screen helps to setup single parameter. Write button helps to write the modified values into the Device.
Groups
SetPoints
Tuning
Tuning Loop 2
SetPoint Ramp
Accutune III
Algorithm
Math Package
Logic Gates
Output Algorithm
Input 1
Input 2
Input 3
Input 4
Input 5
Control
Control Loop 2
Options
Communications
Alarms
Display
Maintenance
Time Events
Ethernet & Email
Name
IP Address
Subnet Mask
Default Gateway
E-Mail Setup
Select Alarm:
Alarm 1 Set Point 2
Alarm 2 Set Point 1
Alarm 2 Set Point 2
Alarm 3 Set Point 1
Alarm 3 Set Point 2
Alarm 4 Set Point 1
Apply
Close
Cancel
Communication Type:
Transmission Status:
start

Select Email: Email 1

To Email: john.doe@yourisp.com

SMTP Address (for Outgoing): 25 56 167 7

From Email: UDC3500_Controller_for_Boiler_#4

Select Alarm: Alarm 1 Set Point 1

Email Subject (124 char max): The High PV Alarm 1 Setpoint 1 has been activated. Send Maintenance Personnel to check Flow Valve #16.

Communication Type: Ethernet

Figure 3-2 Email Configuration Screen

This controller cannot receive Emails, so it is suggested that you configure the "From Email:" window with a non-Email style address that will make it easy for you to determine which controller sent the Email. For Email technical reasons, the entry in the "From Email:" window cannot have spaces. See Figure 3-2.

If you do not know your SMTP IP Address for outgoing Email, then contact your Information Technologies (IT) representative. If your PC is on the same LAN that will be used by the controller and which also connects to the Email server, then the SMTP IP Address may generally be found by opening a DOS shell and typing:

ping smtp.[your domain name and extension], i.e., "ping smtp.your_isp.com"

3/07 UDC2500 Universal Digital Limit ControllerProduct Manual 47

Configuration

The content of the Emails sent by this controller contains the Alarm that triggered the Email, its settings and the current value (if applicable) of the monitored variable. For example, the content of an Email triggered by Alarm 1 Setpoint 1 that is configured to monitor Input 1 would look something like this:

> Name: Alarm 1 SP1, Type: INPUT1, Event: HIGH/END, Value = 500.00, Actual = 712.69

The content of an Email triggered by Alarm 2 Setpoint 1 that is configured to monitor Digital Input 1 would look something like this:

> Name: Alarm 2 SP1, Type: DIG IN1, Event: HIGH/END, Value = 0.00, Actual = 0.00

ATTENTION

Email will always be time-stamped with the date that the Ethernet software in the instrument was last modified.

If the SMTP address on your network is changed, such as can happen when a server is replaced, then you must reconfigure the Email SMTP IP address in this instrument to match.

---

48 UDC2500 Universal Digital Limit ControllerProduct Manual 3/07

3.12 Configuration Record Sheet

Enter the value or selection for each prompt on this sheet so you will have a record of how your controller was configured.

Group Prompt	Function Prompt	Value or Selection	Factory Setting
LOCK	□□C□□ □□C□	□□□□□□□□ □□□□□□□□	D□□ C□□
LIMIT	□□W or □ □□ □ □□W□□□ □□ M□□ □□ M□□ D□□□□□	□□□□□□□□ □□□□□□□□ □□□□□□□□ □□□□□□□□ □□□□□□□□ □□□□□□□□	□ □□ □ □□□M 1000 0 □□□C
INPUT1	□□1□□□ □M□□□1 □□1 □□ □□1 □□ B□□□ 1 □□□□□1 B□□□□□ □M□□ □□□□ D□□□□□	□□□□□□□□ □□□□□□□□ □□□□□□□□ □□□□□□□□ □□□□□□□□ □□□□□□□□ □□□□□□□□ □□□□□□□□ □□□□□□□□ □□□□□□□□	□□ □□□ 2400 1□00 0□0 1□0 □□ 1□0 □0 □□
OPTIONS	□□□□□□ 0 □C□ 100 □C□ C□□□□□ D□□ □□1	□□□□□□□□ □□□□□□□□ □□□□□□□□ □□□□□□□□ □□□□□□□□	D□□ 0 100 4□20 D□□

Group Prompt	Function Prompt	Value or Selection	Factory Setting
COM	Co□ □D□ Co□ □□□ □□□□B B□□D □□ D□□ W□ □□□ □D□□□B □□D□□M □□□□□ □□□□B□	□□□□□□□□ □□□□□□□□ □□□□□□□□ □□□□□□□□ □□□□□□□□ □□□□□□□□ □□□□□□□□ □□□□□□□□ □□□□□□□□ □□□□□□□□	3 D□□ □□□B 1□200 30 □□□B □□□B 0 □C□ D□□
ALARMS	□1□1□□ □1□1□□ □1□1□□ □1□2□□ □1□2□□ □1□2□□ □2□1□□ □2□1□□ □2□1□□ □2□2□□ □2□2□□ □2□2□□ □□□□□□ □□□□M1 B□□C□ D□□□ □□	□□□□□□□□ □□□□□□□□ □□□□□□□□ □□□□□□□□ □□□□□□□□ □□□□□□□□ □□□□□□□□ □□□□□□□□ □□□□□□□□ □□□□□□□□ □□□□□□□□ □□□□□□□□ □□□□□□□□ □□□□□□□□ □□□□□□□□ □□□□□□□□	□□□□ □0 □ □□ □ □□□□ □0 □ □□ □ □□□□ □0 □ □□ □ □□□□ □0 □ □□ □ 0□1 □□□ D□□ D□□
DISPLY	D□CM□ □□□□□ □□□□ □W□D□□ □CD□□□	□□□□□□□□ □□□□□□□□ □□□□□□□□ □□□□□□□□ □□□□□□□□	□□□□ □ □0 □□□B □□□B

4 Operating the Limit Controller

4.1 Overview

Introduction

This section gives you all the information necessary to help you monitor your controller including an Operator Interface overview, how to lockout changes to the controller, entering a security code, and monitoring the displays.

What's in this section?

The following topics are covered in this section.

TOPIC	See Page
4.1 Overview	50
4.2 Operator Interface	51
4.3 Entering A Security Code	51
4.4 Lockout Feature	52
4.5 Monitoring The Limit Controller	53
4.6 How to Operate Your Limit Controller	55
4.7 Alarm Setpoints	58
4.8 P.I.E. Tool Maintenance Screens	59
4.9 Configuring your Ethernet Connection	65

4.2 Operator Interface

Introduction

Figure 5-1 is a view of the Operator Interface. A description of the displays and indicators is included.

Figure 4-1 Operator Interface

4.3 Entering a Security Code

Introduction

The level of keyboard lockout may be changed in the Set Up mode. However, knowledge of a security code number (0 to 9999) may be required to change from one level of lockout to another. When a controller leaves the factory, it has a security code of 0, which permits changing from one lockout level to another without entering any other code number.

Procedure

If you require the use of a security code, select a number from 0001 to 9999 and enter it when the lockout level is configured as NONE. Thereafter, that selected number must be used to change the lockout level from something other than NONE.

NOTICE

Write the n□□ □er on the Con□ig□ration □ecor□ □heet in the con□ig□ration section so □o□ □ill ha□e a per□anent recor□□

Table 4-1 Procedure to Enter a Security Code

Step	Operation	Press	Result
1	Enter Set Up Mode	Setup	*Upper Display* – **SET UP** *Lower Display* – **LOCK**
2	Select an Set Up Group	Function	*Upper Display* – **0** *Lower Display* – **SECUR**
3	Security Code Entry	▲ or ▼	To enter a four digit number in the Upper Display 0001 to 9999 This will be your security code

4.4 Lockout Feature

Introduction

The lockout feature in the UDC2500 is used to inhibit changes (via keyboard) of certain functions or parameters by unauthorized personnel.

Lockout levels

There are different levels of Lockout depending on the level of security required. These levels are:

- NONE No Lockout. All groups Read/Write.
- CAL All groups Read/Write except Calibration
- CONF Configuration parameters are Read only. No writes permitted. Calibration Group is not available.
- +SP Only the Lockout group is available for Read/Write. Setpoint value is Read Only.

See *Subsection 3.4- Lockout Parameters Set Up Group* prompts to select one of the above.

Key error

When a key is pressed and the prompt “Key Error” appears in the lower display, it will be for one of the following reasons:

- Parameter not available or locked out
- Not in setup mode, press **SET UP** key first

4.5 Monitoring Your Limit Controller

Annunciators

The following annunciator functions have been provided to help monitor the controller:

Table 4-2 Annunciators

Annunciator	Indication
ALM 1 2	*A visual indication of each alarm* Blinking 1 indicates alarm latched and needs to be acknowledged before extinguishing when the alarm condition ends
F or **C**	*A visual indication of the temperature units* **F** Degrees Fahrenheit **C** Degrees Celsius

Display Mode

The displays and indicators on the operator interface, as shown in Figure 4-1, let you see what is happening to your process and how the Limit Controller is responding.

The Limit Controller can be either a single line display device (except when in the SETUP mode or the **LOWER DISPLAY** key is pressed or limit has been reached) or it can be a dual line display device (upper display shows PV and lower display shows SP).

The Single Display Mode can be one of two types:

Single Display Mode 1

The PV is displayed in the upper display and the lower display is blank.

Single Display Mode 2

The setpoint is displayed in the upper display and “SP” is displayed in the lower display.

Viewing the operating parameters in Single Display Mode

Press the **LOWER DISPLAY** key to scroll through the operating parameters:

SP* Setpoint

PV Process Variable

* You can press ▲ or ▼ to change the value of this parameter

Timing out from lower display for Single Display Mode

The normal variable display will automatically return in the upper display if the **LOWER DISPLAY** key is not pressed for 30 seconds.

Diagnostic Error Messages

The UDC2500 performs background tests to verify data and memory integrity. If there is a malfunction, an error message will be displayed. In the case of more than one simultaneous malfunction, the messages will be displayed sequentially on the lower display. If any of these error messages in Table 4-3 occur, refer to *Section 7 - Troubleshooting* for information to correct the failure.

Table 4-3 Error Messages

Prompt	Description
EE FAIL	□na□le to □rite to non□olatile □e□or□□
IN1FL	□□o consec□ti□e □ail□res o□ inp□t 1 integration□
CNFERR	Con□ig□ration □rrors□ □o□ li□it greater than high li□it □or □□ or □□
IN1RNG	□np□t 1 □ □t□o□□□ange □ □t□o□range criteria□ □inear range□□10□ o□t□o□range Characteri□e□ range□□1□ o□t□o□range
PV LIM	□□ □ □t□o□□□ange □□ □ □□ □ □□ □ias
FAILSF	□ailsa□e □ con□itions □or □ailsa□e are□ □ □□□□M □est □aile□ □ □cratch □a□ □□M □est □aile□ □ Con□ig□ration □est □aile□ Chec□the □□tat□s□gro□p□
TCWARN	□her□oco□ple sensor is starting to □□rno□t□□
TCFAIL	□her□oco□ple sensor is in i□ □inent □anger o□□□rning o□t□□
OUT2 FL	C□rrent □ □tp□t 2 □ail□re is less than 3□5 □ □□□□

* The Thermocouple Error messages can be disabled by the TCDIAG configuration in the DISPLAY setup group.

** The Current Output 2 Error message can be disabled by the DIAGAL configuration in the ALARM setup group.

High and Low Limit Indication

When the high or low limit is exceeded, the lower display indicates the word “LIMIT” (blinking). The PV is indicated in the upper display. This will continue until the Out-of-Limit condition exists and you reset the latching relay using the **M-A RESET** key or through the Optional External Reset feature.

The Limit Relay *cannot* be reset while a Limit condition exists.

4.6 Operating Your Limit Controller

Operating Principles

The Limit Controller accepts signals from such sources as Thermocouples (T/Cs), Resistance Temperature Detectors (RTDs), and Radiamatics. The equivalent PV signal is compared with the Limit set point. If above (Hi Limit) or below (Lo Limit), a limit output relay is de-energized. When de-energized, the output relay locks out and remains in this state until the PV input signal drops below the high limit setpoint or rises above the low limit setpoint, and the controller is reset manually from the front of the controller or through an optional external switch.

Check the configuration

Make sure the Limit Controller has been configured to handle your process needs. Refer to *Section 3 - Configuration* for prompts and parameters.

- Input Parameters
- Alarm Set Points and type
- Limit Control Type - high or low
- External Reset (Contact Input) - enable or disable
- Power-up Logic - Reset (relay on) or Normal (same as before power down)
- Lockout selection

Power Up Logic

Configurable power-up logic lets you select the latching output relay to require “RESET” or to provide normal operation at power-up. If power to the limit controller fails and power is reapplied, the controller goes through power up tests then starts in one of the following configurable conditions:

- If you configured RST at setup group “LIMIT”, the lower display will blink “LIMIT” at power up. This will require reset via the **M-A RESET** key or external switch to obtain normal operation.
- If you configured NORM at setup group “LIMIT”, the display and limit controller will function normally at power up, (that is, no reset of the latching relay is required unless a limit has been exceeded). If the limit was latched when power went down, the unit will be in limit at power-up.

Refer to *Section 3 - Configuration, subsection 3.4 Limit Parameters Set Up Group* under SET UP prompt “LIMIT” and make your selection at FUNCTION prompt “POWRUP.”

How to set a limit setpoint

□tep	□peration	□ress	□es□lt
1	Displa□ setpoint		□ress the □□o□er Displa□□□e□till □□ appears□
2	□nter the □i□it □etpoint	▲or▼	□et the □□, □sing the □p □ Do□n arro□ □e□s, to the □esire□ □i□it □etpoint
3	□tore the li□it setpoint		□ress the □□o□er Displa□□to store the □al□e□
4	□□the □ispla□ □lashes □□i□it□		□ress the □□to□Man□□eset □e□□

How to Reset the Latching Relay

The latching relay cannot be reset until the PV input signal drops below the high set point (High Limit) or rises above the low set point (Low Limit) value.

Press the **M-A RESET** key or make contact closure of an external switch if the External Reset option is present.

Using the Digital Input Option (External Reset)

The Contact Input option detects the state of external contacts. On contact closure, the controller will reset the latching relay if the controller has External Reset enabled. To allow External Reset (contact input) use the procedure in Table 4-4.

Table 4-4 Using Contact Input Option

Step	Operation	Press	Result
1	Select Options Setup Group	Setup	until you see *Upper Display* **SET** *Lower Display* **OPTIONS**
2	Access the External Reset Option	Function	until you see *Upper Display* **ENAB** **DIS** *Lower Display* **DIGIN1**
3	Change a value	▲ or ▼	to select **ENAB** in the Upper Display

4.7 Alarm Setpoints

Introduction

An alarm consists of a relay contact and an operator interface indication. The alarm relay is de-energized if setpoint 1 or setpoint 2 is exceeded.

The alarm relay is energized when the monitored value goes into the allowed region by more than the hysteresis.

The relay contacts can be wired for normally open (NO) energized or normally closed (NC) de-energized using internal jumper placement. See Table 2-3 in the *Section 2 – Installation* for alarm relay contact information.

There are four alarm setpoints, two for each alarm. The type and state (High or Low) is selected during configuration. See *Subsection 3– Configuration* for details.

Alarm Setpoints Display

Table 4-5 Procedure for Displaying Alarm Setpoints

Step	Operation	Press	Result
1	□elect □lar□ □et□p □ro□p	Setup	□ntil □o□ see□ *Upper Display* □ **SET** *Lower Display* □ **ALARMS**
2	□ccess the □lar□ □etpoint □al□es	Function	□o s□ccessi□el□ □ispla□ the alar□ setpoints an□ their □al□es□ □heir or□er o□ appearance is sho□n □elo□□ *Upper Display* □ **(the alarm setpoint value)** *Range values are within the range of the selected parameters:* ***DE** (Deviation) value = within Input 1 Span* ***PV** (Process variable) value = Within Input 1 range*
3	Change a □al□e	▲ or ▼	□o change an□ alar□ setpoint □al□e in the □pper □ispla□
4	□et□rn to □or□al Displa□	Lower Display	

4.8 P.I.E. Tool Maintenance Screens

Introduction

This controller uses special P.I.E. Tool® Maintenance Screens which allow remote access and access to functions not accessible via the controller's display and keyboard. The figures in this section show screen-shots of the Maintenance Screens from the PC version of the P.I.E. Tool®. Pocket PC Maintenance Screens are generally similar in format but smaller.

□□□□□□□□□

□o□r instr□□ent □a□not ha□e all o□the screens an□ para□eters sho□n in this section□

Loop Data

Select "Loop Data" from the "Maintenance Data" menu.

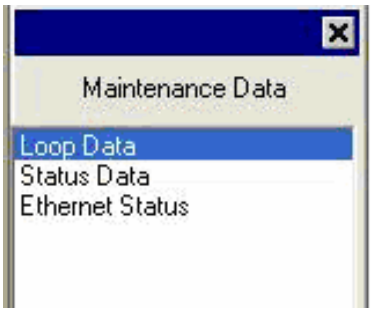

Figure 4-2 Maintenance Data Menu

The Loop Data screen allows you to see the current status of the process loop. "OP1, 2 and 3" windows indicate the status of the current outputs. If a current output is not installed, the OP status for that output is always "OK."

The "Alarms" and "Digital Inputs" buttons allow you to see the current status of each alarm setpoint and digital input.

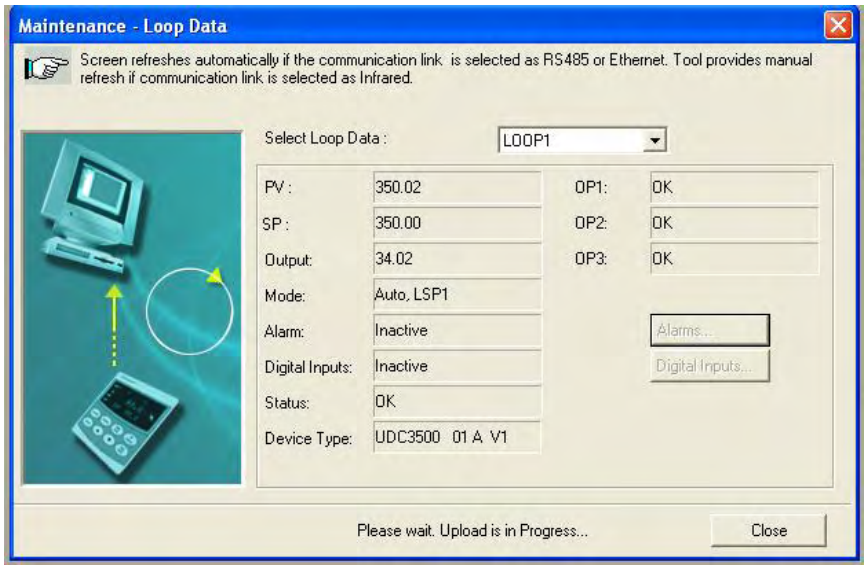

Figure 4-3 Loop Data Maintenance Screen

Loop Data – Alarm Details

This screen appears when you click on the “Alarm” button on the Loop Data Maintenance Screen and shows the status of each alarm setpoint. “NONE” in the Type column indicates that the alarm is disabled. Highlighted alarms are currently active. An asterisk (*) indicates that the alarm has changed state since the last communications transaction.

For this instrument, the “Alarm On” and “Alarm Off” columns will always be blank.

See Section 3.9 for other information about configuring Alarms.

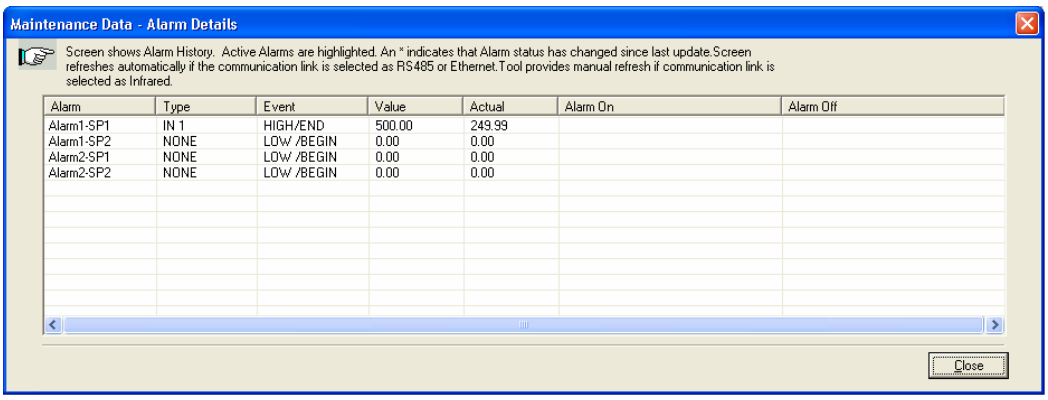

Figure 4-4 Alarm Details Maintenance Screen

Loop Data – Digital Input Details

This screen appears when you click on the “Digital Inputs” button on the Loop Data Maintenance Screen and shows the status of each Digital Input. “NONE” in the Type column indicates that the Digital Input is disabled. Highlighted Digital Inputs are currently active. An asterisk (*) indicates that the alarm has changed state since the last communications transaction.

This instrument has a maximum of two Digital Inputs.

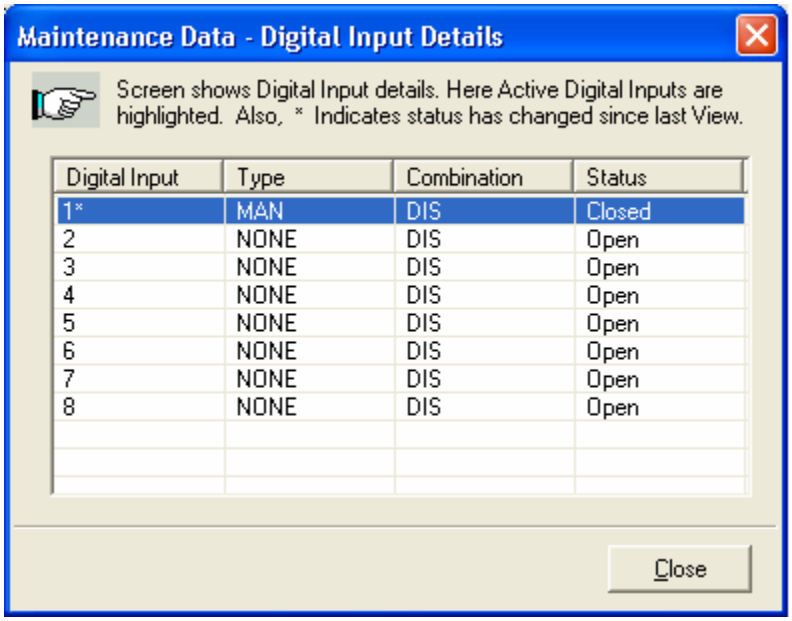

Figure 4-5 Digital Input Details Screen

Status Data

Select “Status Data” from the “Maintenance Data” menu.

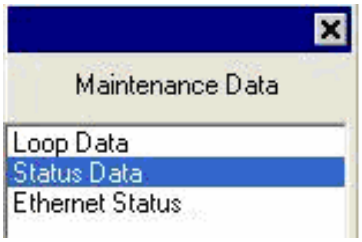

The Status Data screen lets you see the current status of the controller’s diagnostics. If the controller has detected a problem, this screen will show the detected problem. If the controller is equipped with the Real Time Clock Option, then pressing the “Diagnostics” button will show the time and dates that the problem occurred and when it was cleared.

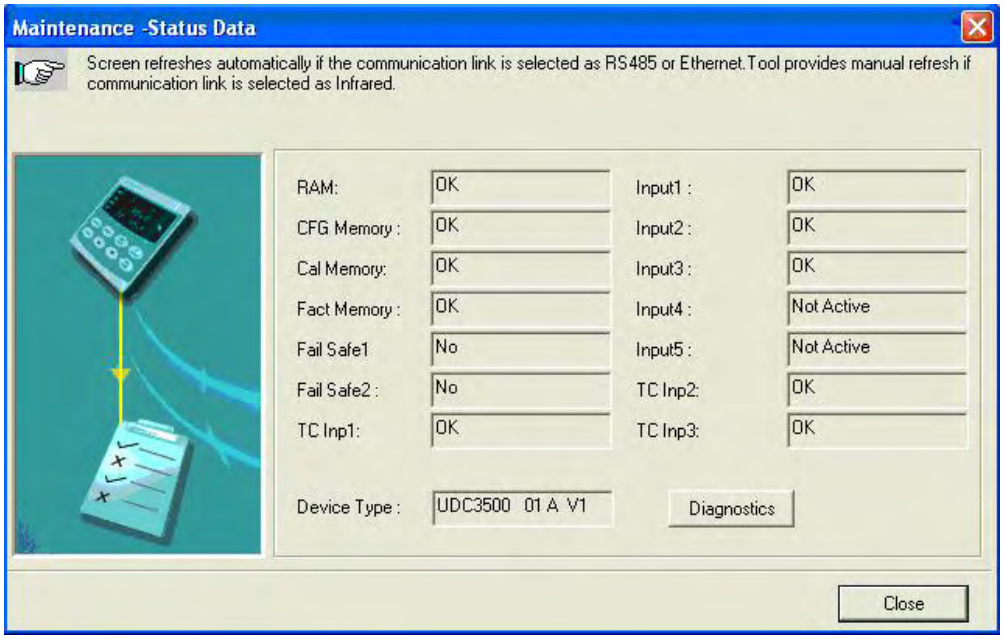

Figure 4-6 Status Data Maintenance Screen

Ethernet Status

Select “Ethernet Status” from the “Maintenance Data” menu.

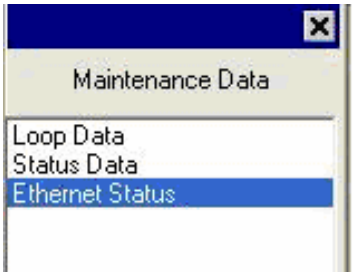

This screen only appears in instruments that have the Ethernet Communications option. Essentially, this screen shows the same Ethernet diagnostic messages as available on the controller via the lower display window. See Section 7.5 for details.

The Ethernet Status screen shows the network status of the Ethernet Link. This may be accessed either via Ethernet or via Infrared communications. Not all diagnostic messages are available via Ethernet Communications. For example, if the Ethernet cable is unplugged, then the instrument cannot send up the “EUNPLGED” diagnostic message via Ethernet.

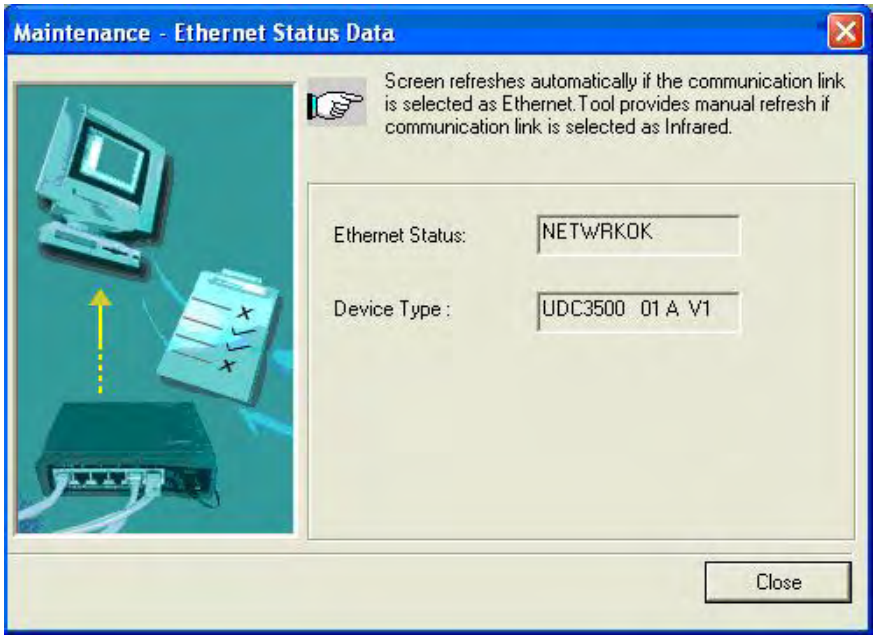

Figure 4-7 Ethernet Status Maintenance Screen

4.9 Configuring your Ethernet Connection

Introduction

This controller is shipped from the factory with the address for Infrared (IR) communications set to 3, the Ethernet IP Address set to 10.0.0.2, the Ethernet Subnet Mask set to 255.255.255.0 and the Ethernet Default Gateway set to 0.0.0.0. Consult your Information Technologies (IT) representative as to how these should be configured for your installation. The MAC address is printed on the product label located on the instrument's case.

Only the P.I.E. Tool® can be used to configure Ethernet parameters. The figures in this section show screen-shots from the PC version of the P.I.E. Tool® Screens. Pocket PC Screens are generally similar in format but smaller. The P.I.E. Tool can connect to your controller via either Ethernet communications port or the Infrared (IR) communications port.

Configuring the Controller via Infrared Communications

If connecting via IR and assuming that the instrument's IR address has not been changed from its factory setting of 3, then configure your Communications Type as "Infrared" and your IR address to 3 as shown below.

Select "PC COMM Setup", then, select "Infrared".

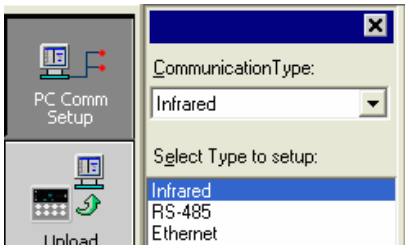

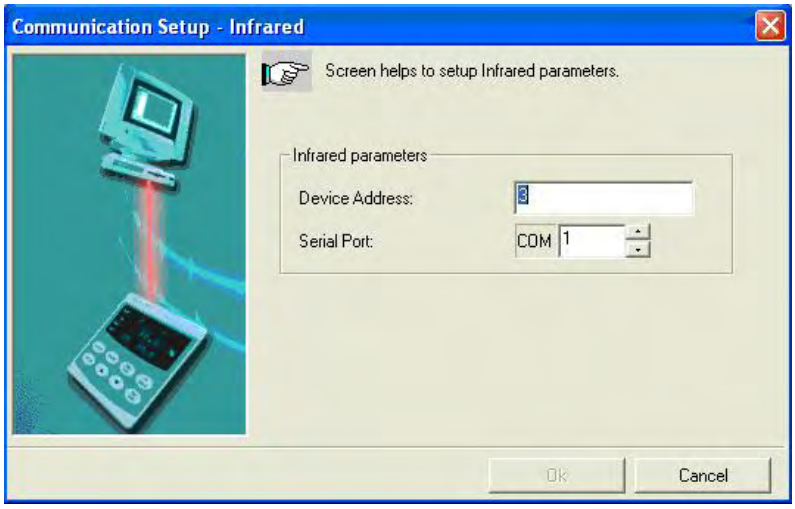

Figure 4-8 IR Communications Address

Close the IR configuration window and then single click on the “Online Configuration” button.

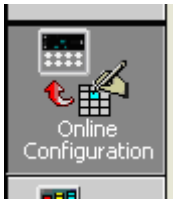

Press any button on the controller’s keyboard to activate the controller’s IR port. Point your IR dongle (if using PC) or your Pocket PC’s IR port (if using Pocket PC) at the IR window on the front of the controller and then click on the “Start” button. The P.I.E. Tool® should start uploading the configuration information from the controller as shown below:

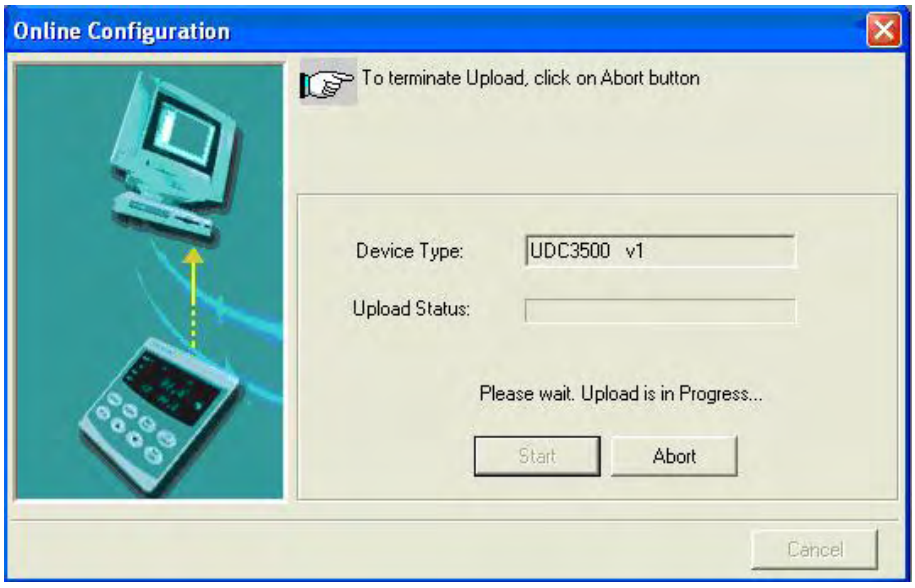

Figure 4-9 Configuration Upload in Progress

Once the upload is complete, click on the “Ethernet & Email” Group. Configure your Ethernet and Email parameters per Section 3.11.

Once you have changed the Ethernet settings and downloaded them to your controller, you will be able to communicate with it via Ethernet.

Configuring the Controller via Ethernet Communications

WARNING

Con ig ring the Controller ia thernet Co nications re ires that o change or Cs settings o ha e ne er one this e ore, then it is **strongly** reco en e that o cons lt ith o r n or ation echnologies representati e e ore proce ing

First, write down the current Local Area Network (LAN) configuration values for your PC for its IP Address, Subnet Mask and Default Gateway settings. Put these someplace where you can find them later.

Connecting to the Ethernet Port in the Controller requires that you have either an Ethernet crossover cable or a MDI-compliant Switch or Hub available with a straight-through cable. The crossover cable can be used to directly connect your PC to the Controller while the Switch or Hub can be used to connect your PC and Controller to the Hub or Switch via straight-through cables.

Once you have made an Ethernet connection between your PC and the controller, then, change the Local Area Network (LAN) settings on your PC to be as follows:

IP Address: 10.0.0.3
Subnet Mask: 255.255.255.0
Default Gateway: 10.0.0.1

Now open your P.I.E. Tool® program and select “PC Comm Setup” and select Ethernet as your “Communication Type” as shown in Figure 4-10.

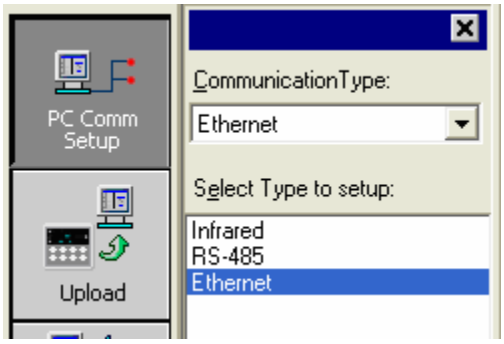

Figure 4-10 Ethernet Communications Type Selection

Now set your Ethernet address to 10.0.0.2 as shown in Figure 4-11.

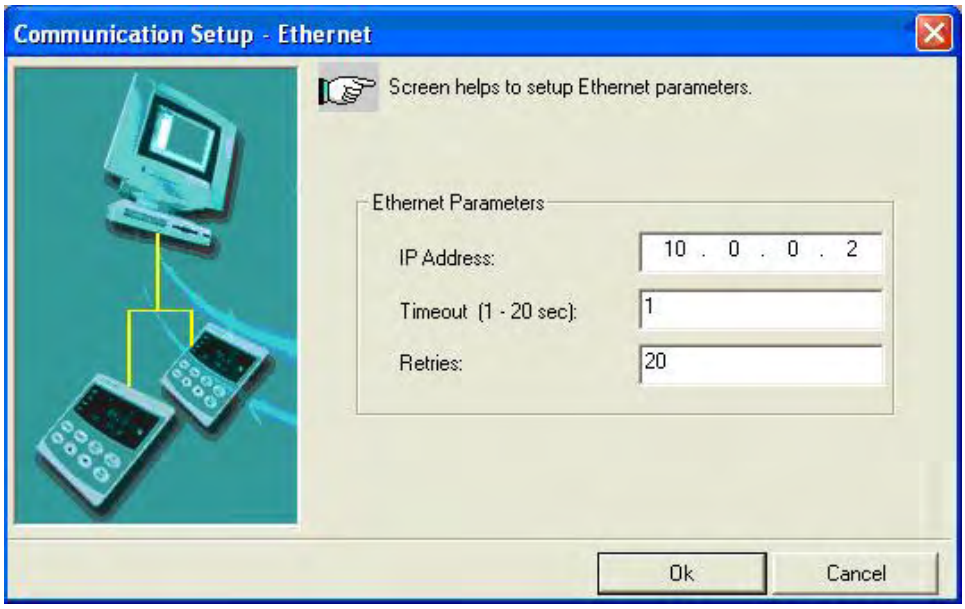

Figure 4-11 Ethernet Communications Address

Close the Ethernet configuration window and then single click on the “Online Configuration” button.

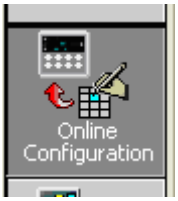

Then, click on the “Start” button. The P.I.E. Tool® should start uploading the configuration information from the controller as shown in Figure 4-12.

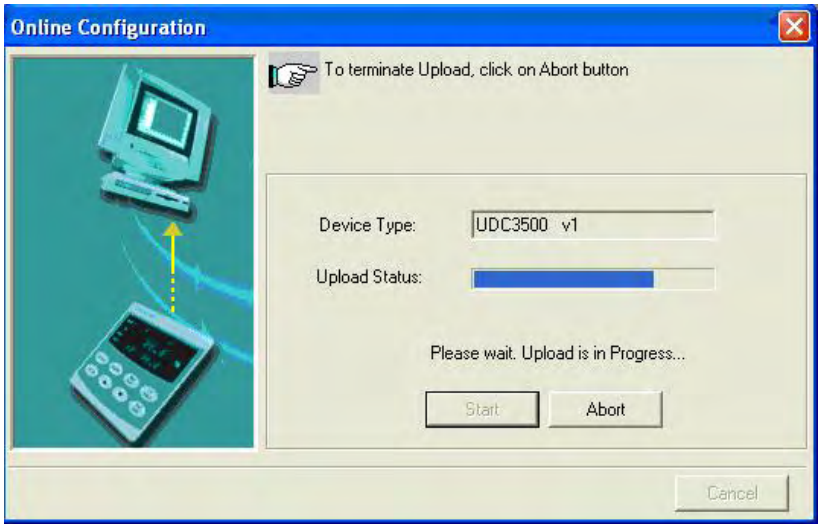

Figure 4-12 Configuration Upload in Progress

Once the upload is complete, click on the “Ethernet & Email” Group. Configure your Ethernet and Email parameters per Section 3.11.

Once you have changed the Ethernet settings and downloaded them to your controller, you will no longer be able to communicate with it until you change the IP address in the P.I.E. Tool® to be per the controller’s new IP Address.

You will also need to re-configure the Local Area Network (LAN) settings on your PC back to their original settings. On some PCs and LANs, it is possible to simply allow the PC to get these settings automatically via the DHCP server. Contact your Information Technologies (IT) representative to see if this is available on your PC.

5 Input Calibration

WARNING—SHOCK HAZARD

INPUT CALIBRATION MAY REQUIRE ACCESS TO HAZARDOUS LIVE CIRCUITS, AND SHOULD ONLY BE PERFORMED BY QUALIFIED SERVICE PERSONNEL. MORE THAN ONE SWITCH MAY BE REQUIRED TO DE-ENERGIZE UNIT BEFORE CALIBRATION.

5.1 Overview

Introduction

This section describes the field calibration procedures for Input 1.

- All input actuations in every UDC2500 controller are fully factory-calibrated and are ready for configuration by the user.
- Field Calibration can improve the accuracy of the Controller if necessary for a particular application.

CAUTION

□he □iel□ cali□ration □ill □e lost i□a change in inp□t t□pe con□ig□ration is i□ple□ ente□ at a later ti□ e□□he original □actor□ cali□ration □ata re□ ains a□aila□le □or later □se a□ter a □iel□ cali□ration is □one□□ee s□□section 5□□ i□□o□ □ant to restore □actor□ cali□ration □al□es□

What's in this section?

The following topics are covered in this section.

TOPIC	See Page
5.1 Overview	70
5.2 Minimum and Maximum Range Values	71
5.3 Preliminary Information	73
5.4 Input #1 Set Up Wiring	74
5.5 Input #1 Calibration Procedure	79
5.6 Restore Input Factory Calibration	80

Calibration Steps

Use the following steps when calibrating an input.

Step	Action
1	□in□ the □ini□ □□ an□ □axi□ □□ range □al□es □or □o□r □□ inp□t range □ro□ □a□le 5□1□
2	Disconnect the □iel□ □iring an□ □in□ o□t □hat e□□ip□ent □o□ □ill nee□ to cali□rate□
3	Wire the cali□rating □e□ice to □o□r controller accor□ing to the set □p □iring instr□ctions □or □o□r partic□lar inp□t □□ □□section 5□4□□
4	□ollo□ the cali□ration proce□□re gi□en □or □np□t □1 □□ □□section 5□5□□

5.2 Minimum and Maximum Range Values

Select the Range Values

Calibrate the controller for the minimum (0 %) and maximum (100 %) range values of your particular input type. Two input controllers will need to have each input calibrated separately.

Select the Voltage, Current or Resistance equivalents for 0 % and 100 % range values from Table 5-1. Use these values when calibrating your controller.

Table 5-1 Voltage, Milliamp and Resistance Equivalents for Input 1 Range Values

Sensor Type	PV Input Range		Range Values	
	°F	°C	0 %	100 %
Thermocouples (per ITS-90)				
B	0 to 3300	□18 to 181□	□0□100 □ □	13□□□□ □ □
E	□454 to 1832	□2□0 to 1000	□□□835 □ □	□□3□3 □ □
E (low)	□200 to 1100	□12□ to 5□3	□□4□2 □ □	44□455 □ □
J	0 to 1□00	□18 to 8□1	□0□88□ □ □	50□0□0 □ □
J (med)	20 to □00	□□ to 482	–0□334 □ □	2□□400 □ □
J (low)	20 to 550	□□ to 288	□0□334 □ □	15□□50 □ □
K	0 to 2400	□18 to 181□	□0□□□2 □ □	52□□52 □ □
K (med)	□20 to 1200	□2□ to □4□	□1□114 □ □	2□□□□8 □ □
K (low)	□20 to □50	□2□ to 3□□	□1□114 □ □	1□□350 □ □
NiMo-NiCo (NNM)	32 to 2500	0 to13□1	0□000 □ □	□1□□□3 □ □
NM90 (low)	32 to 12□0	0 to □82	0□000 □ □	31□825 □ □
Nicrosil-Nisil (Nic)	0 to 23□2	□18 to1300	□0□4□1 □ □	4□□513 □ □
Nic (low)	0 to 14□2	□18 to 800	□0□4□1 □ □	28□455 □ □
R	0 to 3100	□18 to1□04	□0□0□0 □ □	20□281 □ □

Sensor Type	PV Input Range		Range Values	
	°F	°C	0 %	100 %
S	0 to 3100	□18 to1□04	□0□2 □ □	1□□□8 □ □
T	□300 to □00	□184 to 3□1	□5□341 □ □	1□0□□ □ □
T (low)	□200 to 500	□12□ to 2□0	□4□14□ □ □	12□5□4 □ □
W5W26	0 to 4200	□18 to 2315	□0□234 □ □	3□□0□5 □ □
W5W26 (low)	0 to 2240	□18 to 122□	□0□234 □ □	22□283 □ □
RP20-RP40	32 to 321□	0 to1880	0□000 □ □	4□□33 □ □
Thermocouple Differential *	□50 to 150	□4□to □□	□1□54 □ □	4□□2 □ □
Honeywell Radiamatic				
Type RH	0 to 3400	□18 to 18□1	0□00 □ □	5□□12 □ □
Type RI **	0 to □□□□	0 to □□□□	0□00 □ □	□0□08 □ □
RTD Alpha = 0.00385 per IEC-60751 (1995)				
100 ohms	□300 to 1200	□184 to□4□	25□202 oh□s	32□□28□oh□s
100 ohms (low)	□300 to 300	□184 to14□	25□202 oh□s	15□□□10 oh□s
200 ohms	□300 to 1200	□184 to□4□	50□404 oh□s	□58□5□8 oh□s
500 ohms	□300 to 1200	□184 to□4□	12□□012 oh□s	1□4□□445 oh□s
Linear				
Milliamps	4 to 20 □ □ 0 to 20 □ □		4□00 □ □ 0□00 □ □	20□00 □ □ 20□00 □ □
Millivolts	0 to 10 □ □ 0 to 50 □ □ 0 to 100 □ □		0□00 □ □ 0□00 □ □ 0□00 □ □	10□00 □ □ 50□00 □ □ 100□00 □ □
Volts	1 to 5 □olts 0 to 5 □olts 0 to 10 □olts		1□00 □olts 0□00 □olts 0□00 □olts	5□00 □olts 5□00 □olts 10□00 □olts

* The Factory Calibrated millivolt values for the Thermocouple Differential Input are for a pair of J thermocouples at an ambient temperature mean of 450°F / 232°C. Other thermocouple types and ambient temperature means may be accomplished via Field Calibration of the input, with the range value limits being –4 mV to +16 mV for the zero and span values. See Table 5-7 for procedure.

** The range values for Radiamatic Type RI are customer configurable.

5.3 Preliminary Information

Disconnect the Field Wiring

Tag and disconnect any field wiring connected to the input terminals on the rear of the controller.

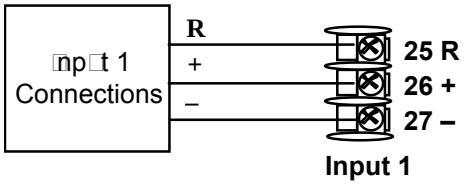

Figure 5-1 Input 1 Wiring Terminals

Equipment Needed

Table 5-2 lists the equipment you will need to calibrate the specific types of inputs that are listed in the table. You will need a screwdriver to connect these devices to your controller.

Table 5-2 Equipment Needed

Type of Input	Equipment Needed
her oco ple nputs ce Bath	• cali rating e ice ith at least 0 02 acc rac or se as a signal so rce s ch as a illi olt so rce • her oco ple extension ire that correspon s ith the t pe o ther oco ple that ill e se ith the controller inp t • o ins late copper lea s or connecting the ther oco ple extension ire ro the ice aths to the so rce • o containers o cr she ice
her oco ple nputs C o rce	• cali rating e ice ith at least 0 02 acc rac or se as a signal so rce s ch as a illi olt so rce • her oco ple extension ire that correspon s ith the t pe o ther oco ple that ill e se ith controller inp t
D esistance her o eter De ice	• eca e ox, ith at least 0 02 acc rac , capa le o pro i ing steppe resistance al es o er a ini range o 0 to 1400 oh s ith a resol tion o 0 1 oh • hree ins late copper lea s o e al length or connecting the eca e ox to the controller
Millia pere, Milli olt, olts, an a ia atic	• cali rating e ice ith at least 0 02 acc rac or se as a signal so rce • o ins late copper lea s or connecting the cali rator to the controller • lace c rrent so rce at ero e ore s itching • Do not s itch c rrent so rces hile connecte to the DC2500 inp t

5.4 Input 1 Set Up Wiring

Thermocouple Inputs Using an Ice Bath

Refer to Figure 5-2 and wire the controller according to the procedure given in Table 5-3.

Table 5-3 Set Up Wiring Procedure for Thermocouple Inputs Using an Ice Bath

Step	Action
1	Connect the copper lea□s to the cali□rator□
2	Connect a length o□ther□ oco□ple extension □ire to the en□ o□each copper lea□ an□ insert the □nction points into the ice □ath□
3	Connect the ther□ oco□ple extension □ires to the ter□inals □or □np□t □1□ □ee □ig□re 5□2□

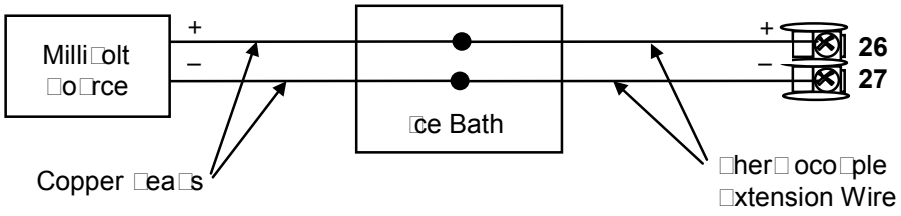

Figure 5-2 Wiring Connections for Thermocouple Inputs Using an Ice Bath

Thermocouple Inputs Using a Thermocouple Source

Refer to Figure 5-3 and wire the controller according to the procedure given in Table 5-4..

Table 5-4 Set Up Wiring Procedure for Thermocouple Inputs using Thermocouple Source

Step	Action
1	Connect the ther□ oco□ple extension □ires to the ter□inals □or □np□t □1 as sho□n in □ig□re 5□3□

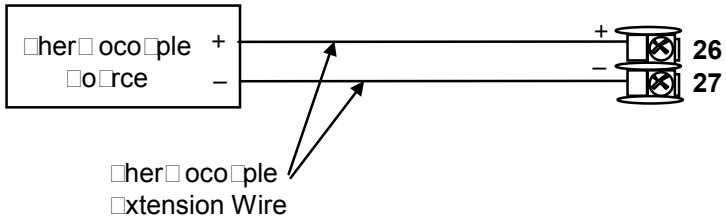

Figure 5-3 Wiring Connections for Thermocouple Inputs Using Thermocouple Source

RTD Inputs

Refer to Figure 5-4 and wire the controller according to the procedure given in Table 5-5.

Table 5-5 Set Up Wiring Procedure for RTD Inputs

Step	Action
1	Connect the copper lea□s □ro□ the cali□rator to the □np□t □1 ter□inals as sho□n in □ig□re 5□4□

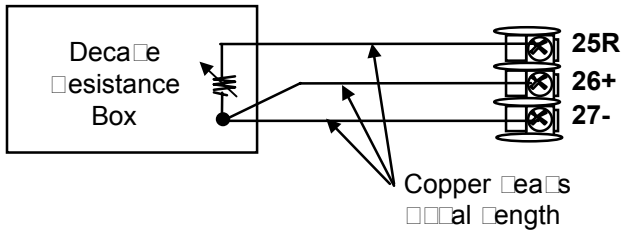

Figure 5-4 Wiring Connections for RTD (Resistance Thermometer Device)

Radiamatic, Millivolts, Volts or Thermocouple Differential Inputs

Refer to Figure 5-5 and wire the controller according to the procedure given in Table 5-6.

Table 5-6 Wiring Connections for Radiamatic, Thermocouple Differential, Millivolts or Volts (Except 0 to 10 Volts)

Step	Action
1	Connect the copper lea□s □ro□ the cali□rator to the □np□t □1 ter□inals as sho□n in □ig□re 5□5□
2	□lace c□rrent□□oltage so□rce at □ero □e□ore s□itching on□
3	Do not s□itch c□rrent□□oltage so□rce □ □ □□ □ □□ □hile connecte□ to the instr□□ent□

□□□□□□□□□

□or □a□ia□atic inp□ts onl□, set □□issi□it□ □al□e to 1□0□□ee *Subsection 3.6* – Con□ig□ration □et □p pro□pt □□□□□1, □nction pro□pt □M□□□□

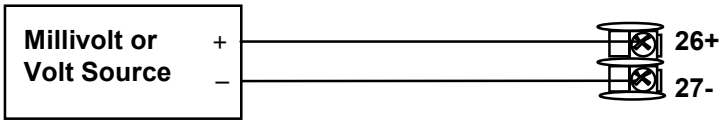

Figure 5-5 Wiring Connections for Radiamatic, Millivolts, Volts or Thermocouple Differential (Except 0 to 10 Volts)

Table 5-7 Procedure to determine calibration voltages for Thermocouple Differential input types other than the Factory Setting

Step	Action
1	□□tain a cop□ o□ the □□□□0 □tan□ar□ □or the □her□oco□ple □□pe □o□ □ill □e □sing□
2	□in□ the ther□oelectric □oltage □or the □esire□ operating te□perat□re□
3	□in□ the ther□oelectric □oltages □or the te□perat□res □50°□ an□ □150°□ a□a□□ro□ the □esire□ operating te□perat□re□
4	□he □ero cali□ration □oltage □ill □e ther□oelectric □oltage □or the □50°□ te□perat□re □in□s the ther□oelectric □oltage □or the □esire□ operating te□perat□re□□his □ill □e a negati□e □oltage□
5	□he span cali□ration □oltage □ill □e ther□oelectric □oltage □or the □150°□ te□perat□re □in□s the ther□oelectric □oltage □or the □esire□ operating te□perat□re□□his □ill □e a positi□e □oltage□

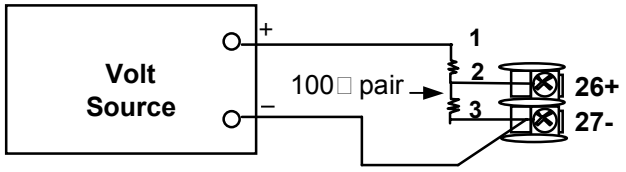

Input Calibration

For example: Determine the calibration voltage values for a pair of J-type thermocouples at an operating temperature of 450°F (this is equivalent to the Factory setting).

- The ITS-90 standard for the J thermocouple shows that the thermoelectric voltage for 450°F is 12.568 millivolts.
- The –50°F point would be 400°F. The ITS-90 standard shows that the thermoelectric voltage for 400°F is 11.025 millivolts.
- The +150°F point would be 600°F. The ITS-90 standard shows that the thermoelectric voltage for 600°F is 17.188 millivolts.
- The zero calibration voltage is thus 11.025 minus 12.568 millivolts or –1.543 millivolts (this can be rounded off to –1.54 millivolts without significant loss of accuracy).
- The span calibration voltage is thus 17.188 minus 12.568 millivolts or +4.62 millivolts.
- Use –1.54 millivolts for the Zero calibration value and +4.62 millivolts for the Span calibration value.

0 to 10 Volts

Refer to Figure 5-6 and wire the controller according to the procedure given in Table 5-8.

Table 5-8 Set Up Wiring Procedure for 0 to 10 Volts

Step	Action
1	Connect the copper leads from the calibrator to the input #1 terminals as shown in Figure 5-6.
2	Place voltage source at zero before switching on.
3	Do not switch voltage source ON/OFF while connected to the instrument.

Volt Source
+
–
100K pair
1
2
3
26+
27-

Figure 5-6 Wiring Connections for 0 to 10 Volts

3/07 UDC2500 Universal Digital Limit ControllerProduct Manual 77

Milliamperes

Refer to Figure 5-5 and wire the controller according to the procedure given in Table 5-6.

Table 5-9 Set Up Wiring Procedure for Milliampere Inputs

Step	Action
1	Connect the copper lea□s ro□ the cali□rator to the □np□t □1 ter□inals as sho□n in □ig□re 5□□□
2	□lace c□rrent so□rce at □ero □e□ore s□itching on□
3	Do not s□itch c□rrent so□rce □ □ □□ □□ □hile connecte□ to the instr□□ ent□

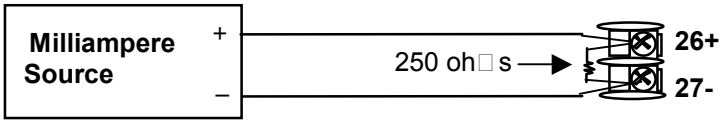

Figure 5-7 Wiring Connections for 0 to 20 mA or 4 to 20 mA Inputs

5.5 Input 1 Calibration Procedure

Preliminary Steps

- Apply power and allow the controller to warm up for 30 minutes before you calibrate.
- Please read *Subsection 5.4 – Input 1 Set Up Wiring* before beginning the procedure.
- **Make sure you have LOCK set to NONE. See *Subsection 3.4.***
- See Table 5-1 for Voltage vs. Resistance equivalents or 0 % and 100 % range values.

CAUTION

□or linear inp□ts, a□oi□ step changes in inp□ts□□ar□s□oothl□ □ro□ initial □al□e to □inal 100 □ □al□e□

Procedure

The calibration procedure for Input #1 is listed in Table 5-10. The numeric codes are also listed.

Table 5-10 Input 1 Calibration Procedure

Step	Operation	Press	Result
1	□nter Cali□ration Mo□e	Setup	*Upper Display* □ **CAL** *Lower Display* □ **INPUT1**
		□ntil □o□ see	
		Function	□o□ □ill see□ *Upper Display* □ **DIS** *Lower Display* □ **CALIN1** □he cali□ration se□□ence is ena□le□ an□ □o□ □ill see□ *Upper Display* □ **BEGN** *Lower Display* □ **CALIN1** □t the co□pletion o□the se□□ence, the selection a□to□aticall□ re□erts to □isa□le□
2	Cali□rate 0 □	Function	□o□ □ill see□ *Upper Display* □ **APLY** *Lower Display* □ **IN1ZRO** • □□□st □o□r cali□ration □e□ice to an o□tp□t signal e□□al to the 0 □ range □al□e □or □o□r partic□lar inp□t sensor□ □ee □a□le 5□1 □or □oltage, Degrees, or □esistance e□□i□alents □or 0 □ range □al□es□ • Wait 15 secon□s, then go to the next step□
3	Cali□rate 100 □	Function	□o□ □ill see□ *Upper Display* □ **APLY**

Step	Operation	Press	Result
			Lower Display – **IN1SPN** • □□□st □o□r cali□ration □e□ice to an o□tp□t signal e□□al to the 100 □ range □al□e □or □o□r partic□lar inp□t sensor□□ee □a□le 5□1 □or □oltage, Degrees, or □esistance e□□i□alents □or 100 □ range □al□es□ • Wait 15 secon□s, an□

If …	Then …
□o□ are cali□rating a □her□oco□ple inp□t	go to step 4
□o□ are cali□rating other than a □her□oco□ple inp□t	go to step 5

4	Chec□ the Col□ □□nction □e□perat□re	Function	□he calc□lations □or □ero an□ span are no□ store□ an□ □o□ □ill see□ *Upper Display* – □he col□ □nction te□perat□re at the rear ter□inals *Lower Display* – **CJTEMP** □he □al□e in the □pper □ispla□is in tenths o□a □egree□t is the c□rrent rea□ing o□the te□perat□re as □eas□re□ at the ther□oco□ple ter□inals an□ recogni□e□ □□the controller□ □o□ can change this □al□e, i□it is in error, □sing the ▲ or ▼ □e□s□ **WARNING:** □he acc□rac□ o□the controller is □irectl□ a□ecte□ □□the acc□rac□ o□this □al□e□ □t is reco□□en□e□ that this □al□e not □e change□ □n□er nor□al circ□□stances□
5	□xit the Cali□ration Mo□e	Function then Lower Display	□he controller stores the cali□ration constants an□ exits the cali□ration □o□e□

5.6 Restore Input Factory Calibration

Introduction

The factory calibration constants for all the input actuation types that can be used with the controller are stored in its non-volatile memory. Thus, you can quickly restore the "Factory Calibration" for a given input actuation type by simply changing the actuation type to another type and then changing it back to the original type.
Refer to Table 5-11 Restore Input Factory Calibration *for procedure.*

□□□□□□□□□

□ restore□ □actor□cali□ration o□er□rites an□pre□io□s □iel□cali□ration □one □or the inp□t an□ □a□change the □igh an□ □o□ □ange □i□its□
□rotect □o□r □iel□cali□ration □ro□ acci□ental o□er□rites □□con□ig□ring the appropriate □□C□□□□ selection a□ter cali□ration□
□ee the *Section 3 - Configuration* □or speci□ic instr□ctions to set the loc□o□t□

Table 5-11 Restore Input Factory Calibration

Step	Operation	Press	Result
1	□et □□C□□□□ to □□□□	Setup	□ntil □o□ see*:* *Upper Display* □ **SET UP** *Lower Display* □ **LOCK**
		Function	□ntil □o□ see□ *Upper Display* □ **one of the following:** **NONE** □all para□eters are rea□□□rite **CAL** □all para□eters are rea□□□rite except Cali□ration **CONF** □con□ig□ration para□eters are □ea□ □nl□□no □rites per□itte□ *Lower Display* □ **LOCK**
		▲ or ▼	□ntil **NONE** is in the □pper □ispla□
2	□nter □□□□□ 1 □et□p □ro□p	Setup	□ntil □o□ see*:* *Upper Display* □ **SET UP** *Lower Display* □ **INPUT 1**
		Function	□ntil □o□ see*:* *Upper Display* □ the c□rrent selection *Lower Display* □ **IN1TYP**
		▲ or ▼	to change the c□rrent selection to another selection
3	□croll thro□gh □□nctions	Function	□ntil the lo□er □ispla□rolls thro□gh the rest o□the □□nctions an□ ret□rns to□ *Upper Display* □ the ne□ selection *Lower Display* □ **INxTYP**
		▲ or ▼	□ntil □o□ change the inp□t selection in the □pper □ispla□ □ac□to the proper selection□□o□ □ill see□ *Upper Display* □ □riginal □np□t □election that □atches □o□r t□pe o□sensor□ *Lower Display* □ **INxTYP**
4	□et□rn to □or□al □peration	Lower Display	to ret□rn to □or□al operating □o□e□ □he □actor□cali□ration □ill □e restore□□□□the pro□le□ is not correcte□, contact the □one□□ell □echnical □ssistance Center□ 1□800□423□□883 □□□ an□ Cana□a

6 Output Calibration

6.1 Overview

Introduction

This section describes the field calibration procedures for the Auxiliary Output.

What's in this section?

The following topics are covered in this section.

TOPIC	See Page
6.1 Overview	83
6.2 Auxiliary Output Calibration	83
6.3 Restore Output Factory Calibration	85

WARNING—SHOCK HAZARD

OUTPUT CALIBRATION MAY REQUIRE ACCESS TO HAZARDOUS LIVE CIRCUITS, AND SHOULD ONLY BE PERFORMED BY QUALIFIED SERVICE PERSONNEL. MORE THAN ONE SWITCH MAY BE REQUIRED TO DE-ENERGIZE UNIT BEFORE CALIBRATION.

6.2 Auxiliary Output Calibration

Introduction

Calibrate the controller so that the auxiliary output provides the proper amount of current over the desired range. The controller can provide an auxiliary current output range of from 0 mA to 20 mA and can be calibrated at 4 mA for 0 % of output and 20 mA for 100 % of output or any other values between 0 mA and 21 mA.

Equipment Needed

You will need a calibrating device with whatever accuracy is required, capable of measuring 0 to 20 mA.

Calibrator Connections

Refer to Figure 6-1 and wire the controller according to the procedure given in Table 6-1.

Table 6-1 Set Up Wiring Procedure for Auxiliary Output

Step	Action
1	Apply power and allow the controller to warm up 30 minutes before calibrate.
2	**Set LOCK in the Tuning Set Up group to NONE.**
3	Tag and disconnect the field wiring, at the rear of the controller, from terminals 12 (+) and 13 (–). See Figure 6-1.
4	Connect a millivolt meter across these terminals.

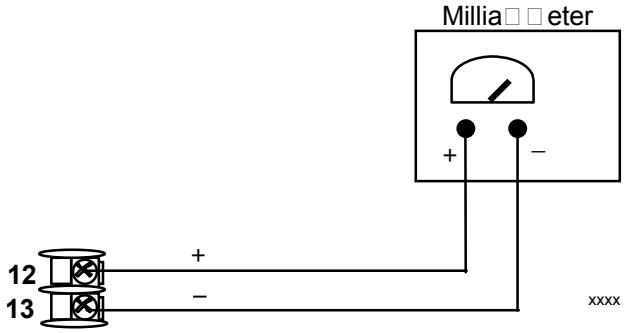

Figure 6-1 Wiring Connections for Calibrating Auxiliary Output

Procedure

The procedure for calibrating the auxiliary output is listed in Table 6-2. The numeric codes are also listed.

Make sure "LOCK" in the Lock Set Up group is set to "NONE" (see *Subsection 3.4).*

Table 6-2 Auxiliary Output Calibration Procedure

Step	Operation	Press	Result
1	□nter Cali□ration Mo□e	Setup	*Upper Display* □ **CAL** *Lower Display* □ **AUXOUT**
		□ntil □o□ see	
2	Cali□rate 0 □	Function	□o□ □ill see□ *Upper Display* □ □ □al□e *Lower Display* □ **ZROVAL**
		▲ or ▼	□ntil the □esire□ 0 □ o□tp□t is rea□ on the □illia□ □eter, □se the □al□es sho□n □elo□ □epen□ing on the action o□ □o□r controller□
3	Cali□rate 100 □	Function	□o store the 0 □ □al□e □o□ □ill see□ *Upper Display* □ □ □al□e *Lower Display* □ **SPNVAL**
		▲ or ▼	□ntil the □esire□ 100 □ o□tp□t is rea□ on the □illia□ □eter□
4	□xit the Cali□ration Mo□e	Function	□he controller stores the span □al□e□
		Lower Display	□o exit the cali□ration □o□e□

6.3 Restore Output Factory Calibration

Introduction

The factory calibration constants for the Auxiliary Outputs are stored in its non-volatile memory. Thus, you can quickly restore the "Factory Calibration" for those outputs by simply changing the ARANGE to the other setting and then changing it back to the original type.
Refer to Table 6-3 Restore Factory Calibration for procedure

□□□□□□□□□

□ restore□ □actor□cali□ration o□er□rites an□ pre□io□s □iel□ cali□ration □one □or the o□tp□t□ □rotect □o□r □iel□ cali□ration □ro□ acci□ental o□er□rites □□ con□ig□ring the appropriate □□C□□□□ selection a□ter cali□ration□
□ee *Section 3 - Configuration* □or speci□ic instr□ctions to set the loc□o□t□

Table 6-3 Restore Factory Calibration

Step	Operation	Press	Result
1	□et □□C□□□□ to □□□□	Setup	□ntil □o□ see*:* *Upper Display* □ **SET** *Lower Display* □ **TUNING**
		Function	□ntil □o□ see□ *Upper Display* □ **one of the following:** **NONE** □ all para□eters are rea□□□rite **CAL** □ all para□eters are rea□□□rite except Cali□ration **CONF** □ con□ig□ration para□eters are □ea□ □nl□□no □rites per□itte□ **VIEW** □ □□ning an□ □etpoint □a□p para□eters are rea□□□rite□□o other para□eters can □e □ie□e□□ **ALL** □ □□ning an□ □etpoint □a□p para□eters are a□aila□le □or rea□ onl□□□o other para□eters can □e □ie□e□□ *Lower Display* □ **LOCK**
		▲ or ▼	□ntil **NONE** is in the □pper □ispla□
2	□nter □□□□□□ or □□□□□□□□ □et□p □ro□p	Setup	□ntil □o□ see*:* *Upper Display* □ **SET** *Lower Display* □ **OPTION** □□or the □□xiliar□□□□tp□t□
		Function	□ntil □o□ see*:* *Upper Display* □ the c□rrent selection *Lower Display* □ **ARANGE** □□or the □□xiliar□□□□tp□t□
		▲ or ▼	to change the range con□ig□ration to the other selection
3	□croll thro□gh □□nctions	Function	□ntil the lo□er □ispla□rolls thro□gh the rest o□the □□nctions an□ ret□rns to□ *Upper Display* □ the ne□ selection *Lower Display* □ **ARANGE** □□or the □□xiliar□□□□tp□t□
		▲ or ▼	to change the range selection in the □pper □ispla□ □ac□to the proper selection□□o□ □ill see□ *Upper Display* □ □riginal range selection *Lower Display* □ **ARANGE** □□or the □□xiliar□□□□tp□t□
4	□et□rn to □or□al □peration	Lower Display	to ret□rn to □or□al operating □o□e□ □he □actor□cali□ration □ill □e restore□□□□the pro□le□ is not correcte□, contact the □one□□ell □echnical □ssistance Center at 1□ 800□423□□883 □□□ an□ Cana□a

7 Troubleshooting/Service

7.1 Overview

Introduction

Instrument performance can be adversely affected by installation and application problems as well as by hardware problems. We recommend that you investigate the problems in the following order:

- installation related problems
- application related problems
- hardware and software related problems

and use the information presented in this section to solve them.

What's in this section?

The following topics are covered in this section.

TOPIC		See Page
7.1	Overview	87
7.2	Troubleshooting Aids • Overall Error Messages • Controller Failure Symptoms • Customer Support • Determining the Software Version Number	88
7.3	Power-up Tests	90
7.4	Status Tests	90
7.5	Background Tests	91
7.6	Controller Failure Symptoms	93
7.7	Troubleshooting Procedures • Power Failure • Alarm Relay Output Failure • Keyboard Failure	94
7.8	Restore Factory Configuration	100

Installation related problems

Read the Installation section in this manual to make sure the UDC2500 has been properly installed. The installation section provides information on protection against electrical

noise, connecting external equipment to the controller, and shielding and routing external wiring.

ATTENTION

□□ste□ noise in□□ce□ into the controller □ill res□lt in □iagnostic error □essages rec□rring□□□the □iagnostic error □essages can □e cleare□, it in□icates a □so□t□□ail□re an□ is pro□a□l□noise relate□□

□□s□ste□ noise is s□specte□, co□pletel□isolate the controller □ro□ all □iel□ □iring□□se cali□ration so□rces to si□ □late □□ an□ chec□ all controller □nctions□i□e□□ain, □ate, □eset, □□tp□t, □lar□s, etc□

Application related problems

Review the application of the controller; then, if necessary, direct your questions to the local sales office.

Hardware and software related problems

Use the troubleshooting error message prompts and controller failure symptoms to identify typical failures which may occur in the controller. Follow the troubleshooting procedures to correct them.

7.2 Troubleshooting Aids

Overall error messages

An error message can occur:

- At power-up. See Subsection 7.3.
- When the Status Tests are requested. See Subsection 7.4.
- During continuous background tests while in normal operation. See Subsection 7.5.

Controller failure symptoms

Other failures may occur that deal with the Power, Output, or Alarms. Refer to the controller failure symptom in Table 7-4 to determine what is wrong and the troubleshooting procedures to use to correct the problem.

Check installation

If a set of symptoms still persists, refer to *Section 2 - Installation* and ensure proper installation and proper use of the controller in the system.

Customer support

If you cannot solve the problem using the troubleshooting procedures listed in this section, you can get **technical assistance** by dialing 1-800-423-9883 USA and Canada.

An engineer will discuss your problem with you. **Please have your complete model number, serial number, and Software version available.** The model and serial numbers can be found on the chassis nameplate. The software version can be viewed under Setup Group “Status.” See Table 7-1.

Troubleshooting/Service

If it is determined that a hardware problem exists, a replacement controller or part will be shipped with instructions for returning the defective unit.

Do not return your controller without authorization from Honeywell's Technical Assistance Center or until the replacement has been received.

Check out Honeywell's **web site** at http://www.honeywell.com/imc.

Determining the software version

Table 7-1 lists the procedure for identifying the software version number.

Table 7-1 Procedure for Identifying the Software Version

Step	Operation	Press	Result
1	Select STATUS Set Up Group	**Setup**	*Upper Display* = **READ** *Lower Display* = **STATUS**
2	Read the software version	**Function**	You will see: *Upper Display* = Software version number **26xx** *Lower Display* = **VERSION** Please give this number to the Customer Support person. It will indicate which version of UDC2500 you have and help them determine a solution to your problem.

3/07 UDC2500 Universal Digital Limit ControllerProduct Manual 89

Troubleshooting/Service

7.3 Power-up Tests

What happens at power-up

When power is applied, the controller will run three diagnostic tests. After these tests are completed, “TEST DONE” is displayed.

Test Failures

If one or more of these tests fail, the controller will go to the Failsafe Manual Mode, and FAILSF will flash in the lower display and a message indicating which test failed will appear in the lower display. Then, “DONE” will appear in the lower display.

7.4 Status Tests

Introduction

When required, the results of these tests can be checked to determine the reason the controller has gone to Failsafe.

How to check the status tests

The procedure in Table 7-2 tells you how to display the results of the status tests.

Table 7-2 Procedure for Displaying the Status Test Results

Step	Operation	Press	Result
1	Select STATUS Set Up Group	**Setup**	*Upper Display* = **READ** *Lower Display* = **STATUS**
2	Read the test results	**Function**	You will see: *Upper Display* = **NO or YES** YES indicates a failure *Lower Display* = **FAILSAFE**
		Function	*Upper Display* = **PASS or FAIL** *Lower Display* = **TEST**

90 UDC2500 Universal Digital Limit ControllerProduct Manual 3/07

7.5 Background Tests

Introduction

The UDC2500 performs ongoing background tests to verify data and memory integrity. If there is a malfunction, a diagnostic message will be displayed (blinking) in the lower display.

In the case of simultaneous malfunctions, the messages will appear in sequence in the lower display. Table 7-3 lists these background tests, the reason for their failure, and how to correct the problem.

Diagnostic messages may be suppressed (stop the blinking) by pressing the **RUN/HOLD** key. The messages will still be available for viewing by pressing the **LOWER DISPLAY** key.

Table 7-3 Background Tests

Lower Display	Reason for Failure	How to Correct the Problem
E FAIL	Unable to write to nonvolatile memory for one of the following reasons: • You attempted to change a parameter and it is not accepted, so you will see the old value • You attempted to change something in configuration • Run through each of the tests to write to EEPROM	1. Check the accuracy of the parameter and re-enter 2. Do not attempt to change something in configuration 3. Run through each of the tests to write to EEPROM
FAILSF	This error message shows whenever the controller goes into a failsafe mode of operation. This will happen if: • The EEPROM test fails • Configuration test fails • Calibration test fails • Both configured for none and the input fails	1. Run through each of the tests to determine the reason for the failure 2. Press the **SET UP** key until PASSED appears in the lower display 3. Press the **FUNCTION** key to see whether the tests pass or fail, then run through the tests a second time to see if the error cleared
IN1RNG	Input 1 out of range. The process input is outside the range limits	1. Make sure the range and actuation are configured properly 2. Check the input source 3. Restore the factory calibration *(See Subsection 5.6.)* 4. Field calibrate. See *Section 5 - Input Calibration.*
IN1_FL	Two consecutive failures of input 1 integration time, cannot make analog to digital conversion. This will happen if: • Upscale or Downscale was not selected and the input is open • Input not configured correctly for the sensor being used	1. Make sure the actuation is configured correctly. See *Section 3 - Configuration* 2. Make sure the input is correct and that it has not burned out or opened 3. Check for gross overranging with a multimeter 4. Restore factory calibration. See *Subsection 5.6.*

Lower Display	Reason for Failure	How to Correct the Problem
PV LIM	□□ o□t o□range□ □□ □ □□□1 x □□□□□□1□ □□□1 B□□□	1□Ma□e s□re the inp□t signal is correct□ 2□Ma□e s□re the □atio an□ Bias settings are correct□ 3□ □echec□the cali□ration□□se Bias o□0□0
TCWARN	□he □her□oco□ple is starting to □□rno□t□	□his is a □arning □essage that the controller has □etecte□ that the ther□oco□ple is starting to □□rno□t□ □his error □essage □a□also □e create□ i□the resistance o□the □ires □se□ to connect the ther□oco□ple to the instr□□ent is a□o□e 100 oh□s□
TCFAIL	□he □her□oco□ple is in i□ □inent □anger o□□□rning o□t□	□his is a □arning □essage that the controller has □etecte□ that the ther□oco□ple □ill soon □ail□ □ser sho□l□ consi□er replacing the ther□oco□ple as soon as possi□le□
OUT2FL	□□xiliar□ □ □tp□t is less than 3□5 □ □□	□he a□xiliar□o□tp□t is open circ□it□Chec□the □iel□ □iring□□ee □roce□□re □□□

Troubleshooting/Service

7.6 Controller Failure Symptoms

Introduction

In addition to the error message prompts, there are failure symptoms that can be identified by noting how the controller displays and indicators are reacting.

Symptoms

Compare your symptoms with those shown in Table 7-4.

Table 7-4 Controller Failure Symptoms

Upper Display	Lower Display	Indicators	Controller Output	Probable Cause	Trouble-shooting Procedure
Upper Display	**Lower Display**	**Indicators**	**Controller Output**	**Probable Cause**	**Trouble-shooting Procedure**
Blank	Blank	Off	None	Power Failure	1
OK	Displayed Output disagrees with controller output	OK	Controller Output disagrees with displayed output	Relay Output	2
OK	OK	OK	External Alarm function does not operate properly	Malfunction in alarm output	3
Display does not change when a key is pressed				Keyboard Malfunction	4
Controller fails to go into "Slave" operation during communications				Communications Failure	5
OK	Displayed Output disagrees with Auxiliary Output	OK	Controller Auxiliary Output disagrees with Displayed Auxiliary Output	Auxiliary Output	6

Other symptoms

If a set of symptoms or prompts other than the one you started with appears while troubleshooting, re-evaluate the symptoms. This may lead to a different troubleshooting procedure.

If the symptom still persists, refer to the installation section in this manual to ensure proper installation and proper use of the controller in your system.

3/07 UDC2500 Universal Digital Limit ControllerProduct Manual 93

7.7 Troubleshooting Procedures

Introduction

The troubleshooting procedures are listed in numerical order as they appear in Table 7-4. Each procedure lists what to do if you have that particular failure and how to do it or where to find the data needed to accomplish the task.

WARNING—SHOCK HAZARD

TROUBLESHOOTING MAY REQUIRE ACCESS TO HAZARDOUS LIVE CIRCUITS, AND SHOULD ONLY BE PERFORMED BY QUALIFIED SERVICE PERSONNEL. MORE THAN ONE SWITCH MAY BE REQUIRED TO DE-ENERGIZE UNIT BEFORE SERVICING.

Equipment needed

You will need the following equipment in order to troubleshoot the symptoms listed in the tables that follow:

- Multimeter – Capable of measuring millivolts, milliamps and resistance.
- Calibration sources – T/C, mV, Volt, etc.

Procedure #1

Table 7-5 explains how to troubleshoot power failure symptoms.

Table 7-5 Troubleshooting Power Failure Symptoms

Step	What to do	How to do it
1	Chec□ the □C line □oltage□	□se a □olt□eter to □eas□re the □C □oltage across ter□inals □1 an□ □2 on the rear ter□inal panel o□ the controller□ Chec□ the earth gro□n□ connection□
2	Ma□e s□re the chassis pl□gs into the rear o□ the case properl□□	With□ra□ the chassis an□ □is□all□ inspect the controller □oar□ an□ the insi□e o□ the case□
3	Chec□ the s□ste□ □or Bro□n□ o□ts, hea□□loa□ s□itching, etc□, an□ con□or□ance to installation instr□ctions□	□e□er to *Section 2 - Installation*□
4	Change □o□er □oar□□	□nstallation instr□ctions s□pplie□ □ith ne□ □oar□□

Procedure #2

Table 7-6 explains how to troubleshoot Latching Output Relay failure.

Table 7-6 Troubleshooting Latching Output Relay Failure

Step	What to do	How to do it
1	Ma□e s□re all the con□ig□ra□le □ata store□ in the controller is correct□□econ□ig□re, i□ necessar□□	□e□er to □ection 3 □Con□ig□ration to chec□ all this □ata an□ ho□ to recon□ig□re□
2	Chec□ that the □atching □ela□ act□ates properl□□	Mo□e the setpoint a□o□e or □elo□ the □□ □al□e, □epen□ing on the t□pe o□□i□ it Control con□ig□re□□ □isten □or the clic□ o□ the rela□ as the setpoint is □o□e□ a□o□e or □elo□ the □□□
3	Chec□ the □atching □ela□ □□□ per position □□□ or □C□□	□e□er to □ection 2□4 □i□it Control an□ □lar□ □ela□ Contact □n□or□ation □or □ela□ Contact in□or□ation□

Procedure #3

Table 7-7 explains how to troubleshoot Alarm Relay Output failure.

Table 7-7 Troubleshooting Alarm Relay Output Failure

Step	What to do	How to do it
1	Chec□ the alar□ con□ig□ration □ata□□□it is correct, chec□ the □iel□ □iring□	□econ□ig□re i□necessar□□ □e□er to *Section 3 - Configuration* □or □etails□
2	Chec□ that the applica□le alar□ rela□ act□ates properl□ □epen□ing on □hat □o□ ha□e set at pro□pt □x□x□□□ □□it □oes, chec□ the □iel□ □iring□	□□the alar□ t□pe is set □or □□, place the controller in □an□al □o□e□□ar□ the inp□t to raise an□ lo□er the □□ aro□n□ the setpoint□□isten □or a clic□ □ro□ the rela□ as the □□ □o□es in either □irection an□ note that the proper □□M1 or □□M2 is lit□
3	Chec□ the contacts□	Ma□e s□re the □□ or □C contact □iring is correct□ □e□er to *Section 2 - Installation* □or rela□ contact in□or□ation□
4	Change the rela□ an□□or the c□rrent o□tp□t □oar□□	□nstallation instr□ctions s□pplie□ □ith the ne□ rela□or □oar□□
5	Change MC□ □oar□□	□nstallation instr□ctions s□pplie□ □ith the ne□ □oar□□

Troubleshooting/Service

Procedure #4

Table 7-8 explains how to troubleshoot a Keyboard failure.

Table 7-8 Troubleshooting a Keyboard Failure

Step	What to do	How to do it
1	Make sure the keyboard is connected properly to the MCU output and power input boards.	Withdraw the chassis from the case and visually inspect the connection.
2	Controller keyboard or specific keys may be LOCKED OUT via the security code.	Use your four-digit security code number to change the lockout level. Refer to *Section 3 – Configuration.*
3	Run the keyboard test.	Press the **SET UP** key and hold in, then press the **FUNCTION** key at the same time. The controller will run a display test. Then you will see: Upper Display KEYS Lower Display TRY ALL Press each key. If it works, the key name will appear in the lower display.
4	Replace the display/keyboard if any keys are shorted out.	Refer to *“Parts Replacement Procedures”* in this section.

3/07 UDC2500 Universal Digital Limit ControllerProduct Manual 97

Procedure #5

Table 7-8 explains how to troubleshoot a Communications failure.

Table 7-9 Troubleshooting a RS-485 Communications Failure

Step	What to do	How to do it
1	Chec□ the □iel□ □iring an□ ter□ination resistor□	□sing an oh□ □eter, chec□ the resistance across the co□ □ □nications rear ter□inals□ □ee □ection 2□□ □or □iring □iagra□s□
2	Ma□e s□re the Co□ □ □nications □rinte□ Wiring Boar□ is installe□ properl□ in the controller□	With□ra□ the chassis □ro□ the case an□ inspect the □oar□□□ee the explo□e□ □ie□ □□ig□re 8□1 □□or location o□ the □oar□□□et□rn the chassis to the case□
3	Deter□ine i□ the Co□ □ □nications □oar□ is □a□lt□ □□r□nning a □□C□□ □□ □ □B□C□ □□□□□□ □□ the test □ails, replace the □oar□□ □□ the test passes, the pro□le□ is □ost li□el□else□here in the co□ □ □nications net□or□□	Disconnect the co□ □ □nications ca□le □ro□ the rear ter□inals□□ □n the □ocal □oop□ac□ □est□ □ress **SET UP** □e□ □ntil □o□ see□ □pper Displa□ □□□ □□ □o□er Displa□ C□M □ress **FUNCTION** □e□ □ntil □o□ see□ □pper Displa□ D□□□B□□ □o□er Displa□ □□ □ □B□C□ □ress ▲ or ▼ □o□ □ill see□ □pper Displa□ □□□B□□ □o□er Displa□ □□ □ □B□C□ □he test □ill r□n □ntil the operator □isa□les it here□

Troubleshooting/Service

Procedure #6

Table 7-10 explains how to troubleshoot AuxiliaryProportional Output failure symptoms.

Table 7-10 Troubleshooting Auxiliary Output Failure

Step	What to do	How to do it
1	Make sure the controller is configured for Auxiliary Output and the proper range (4 to 20 or 0 to 20) is configured.	Make Options Set Up group function prompt AUX OUT any selection other than NONE. If this prompt does not show up, check if DIG IN 2 is enabled. If so, then as Auxiliary Output and Digital Input 2 are mutually exclusive, you must chose which one of these features you wish to use. Make the Options Set UP group function prompt CRANGE = 4-20 or 0-20 per your application. Refer to *Section 3 - Configuration*.
2	Check the field wiring.	Output impedance must be less than or equal to 1000 ohms.
3	Check the output.	Change the AUX OUT selection to OUTPUT. Put the controller into Manual mode and change the output from 0 % to 100 % (4-20 mA). Use a DC milliammeter at the rear terminals to verify the output.
4	Recalibrate the Auxiliary output.	Refer to *Section 6 - Output Calibration* for details.
5	Change Auxiliary Output board.	Installation instructions provided with new board.
6	Change Controller	

3/07 UDC2500 Universal Digital Limit ControllerProduct Manual 99

7.8 Restoring Factory Configuration

Introduction

This procedure restores the configuration of the instrument back to the Factory Settings per Section 3.12.

ATTENTION: Restoring the factory configuration overwrites all user-entered configuration changes. This procedure cannot be undone, it is a one-way process.

Table 7-11 explains how to restore Factory Configuration.

Table 7-11 Restoring Factory Configuration

Step	What to do
1	□□rn o□□the po□er to the instr□□ent □or at least i□e secon□s□
2	□□rn the po□er □ac□on an□ si□ □ltaneo□sl□press the □□□□C□□□□□an□ ▲ □□ttons□ □his □ □st □e □one □hile □□□□□ D□□□□is □eing □ispla□e□□
3	□□step 2 □as per□or□ e□ correctl□, the instr□□ent □ill no□ □ispla□ □□DC□□□pper□ □□□D□□□□□□o□er□□
4	□ress the □□nction □e□□ □he instr□□ent □ill no□ □ispla□ □C□□ □□□□□□□□□□
5	□ress the □□nction □e□□ □he instr□□ent □ill no□ □ispla□ □D□ □□□□□□□□□□□
6	When the instr□□ent □inishes the restore operation, it a□to□aticall□resets itsel□an□ restarts in the pro□□ct □o□e□ □he instr□□ent con□ig□ration □ill no□ □e the sa□e as it □as □hen the instr□□ent le□t the □actor□an□ all □ser□entere□ con□ig□rations since that ti□e ha□e □een o□er□ritten□

8 Parts List

8.1 Exploded View

Introduction

Figure 8-1 is an exploded view of the UDC2500 Controller. Each part is labeled with a key number. The part numbers are listed by key number in Table 8-1. Parts not shown are listed in Table 8-2.

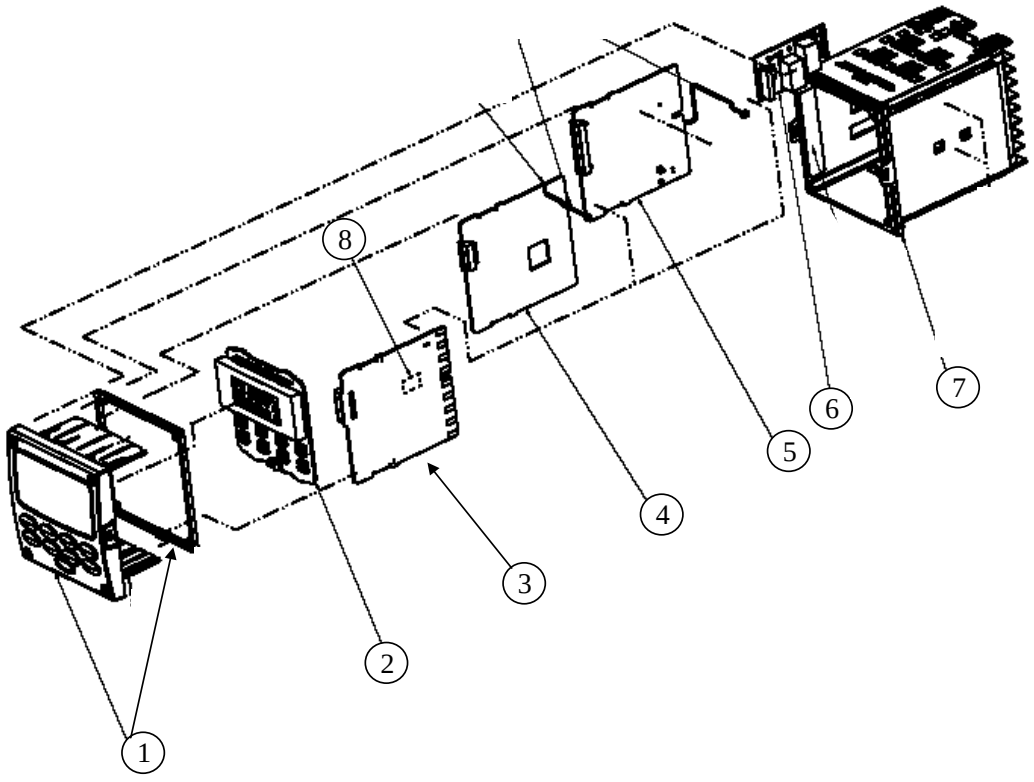

Figure 8-1 UDC2500 Exploded View

Table 8-1 Parts Identification

Key Number	Part Number	Description
1	51453143-501	Bezel Assembly, Clean Bezel Gasket
2	51452758-502	Display Module Board Assembly with Cover
3	51452822-502 51452822-503	Power Input/Output Wiring 0/24 Vac Operation Power Input/Output Wiring 24 Vac/dc Operation
4	51452810-501 5145281x-501	Auxiliary Output/Digital Input/RS-422/485 Communications Wiring Auxiliary Output/Digital Input/Ethernet Communications Wiring
5	51452801-504	MC Inputs Wiring with Mounting Brackets
7	30-5530x-501 30-5xxxx-501 30-5xx25-501	Output 1 • Electro-Mechanical Relay • Open Collector/Triac Output Wiring • Solid State Relay
7	51452x5x-501	Case Assembly (including Mounting Kit with Covers and Brackets)
8	30-5530x-501 30-5xxxx-501 30-5xx25-501	Solar 2 • Electro-Mechanical Relay • Open Collector/Triac Output Wiring • Solid State Relay

Table 8-2 Parts Not Shown

Part Number	Description
30-31xxx-50x	4-20 mA Input Resistor Assembly (250 ohm)
30-544x-5-501	0-10 Volt Input Resistor Assembly (100K pair)
51452x-3-501	Mounting Kits (12 Brackets)

8.2 Removing the chassis

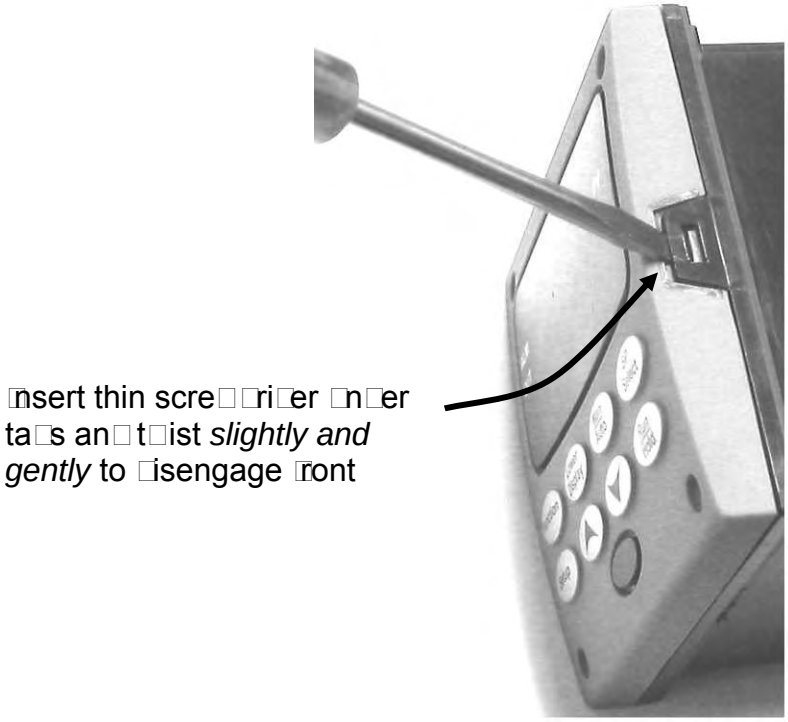

Using a thin screwdriver, *gently* twist the screwdriver to pry the side tabs from the front face. Pry just enough to release it, *otherwise you'll bend or break the tab*. If you break or bend the tab and can't reattach the front snugly, you'll need to reattach the front using the 4 NEMA4 screws provided. See Figure 2-3 on page 15.

9 Modbus RTU Function Codes

9.1 Overview

This section describes the function codes needed to upload and download the configuration from a host computer into this instrument.

What's in this section?

The following topics are covered in this section.

TOPIC	See Page
9.1 Overview	104
9.2 General Information	104
9.3 Function Code 20	106
9.4 Function Code 21	110

9.2 General Information

This instrument uses a subset of the standard Modbus RTU function codes to provide access to process-related information. Several MODICON function codes are implemented. It is appropriate to define instrument-specific "user-defined" function codes. Where differences occur between the two protocols it will be noted. Several standard Modbus RTU function codes are supported.

Configuration ID Tags

Function codes **20** and **21** use the RS422/485 tag IDs for accessing configuration and process-related data. These tags are fully explained in *Section 10.*

The tag IDs represent the register addresses used in the Request Message.

Other Modbus Codes

For Modbus codes **other than** for accessing configuration and process-related data for this controller, refer to the Modbus RTU Serial Communications User Manual # 51-55-25-66.

Register Address Structure

Table 9-1 Integer Parameter Type

Register Numbers (Dec)	Name	Access	Notes
1	pe 1	D	1 it nsigne nteger
2	ttri te	D	1 ea nl, 2 ea Write
3	al e 1 it integer	ea Write	
4	ot se	D	
5	o ange 1 it integer	D	
	ot se	D	
	igh ange 1 it nteger	D	
8	ot se	D	
to 13	Description ext C string	D	

Table 9-2 Floating Point Parameter Type

Register Numbers (Dec)	Name	Access	Notes
1	pe 2	D	loating oint
2	ttri te	D	1 ea nl, 2 ea Write
3	al e loat high or	ea Write	
4	al e loat lo or	D	
5	o ange loat high or	D	
	o ange loat lo or	D	
	igh ange loat high or	D	
8	igh ange loat lo or	D	
to 13	Description ext C string	D	

Register Count

The register count depends on the data format of the registers being read or written.

Integer data is represented in sixteen bits and is transferred high byte first. Floating point data is transferred in IEEE 32-bit format.

The register count definitions are:

0001 = Integer Data
0002 = Floating Point Data

9.3 Function Code 20 (14h) - Read Configuration Reference Data

Description

Function code 20 (14 Hex) is used in this instrument to read information stored in its configuration database. Each configuration item is explicitly addressed by a file number and register address. IEEE 32-bit floating point and 16-bit integer formats are supported.

Request and Response Formats

The Request and Response formats for Function code 20 (14 Hex) are shown below. Details for each block reference follow.

Request Message Format

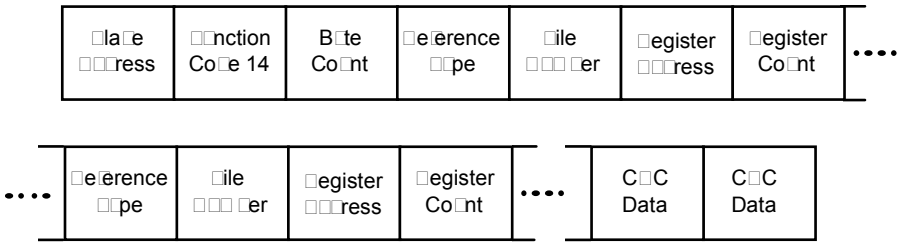

Response Message Format

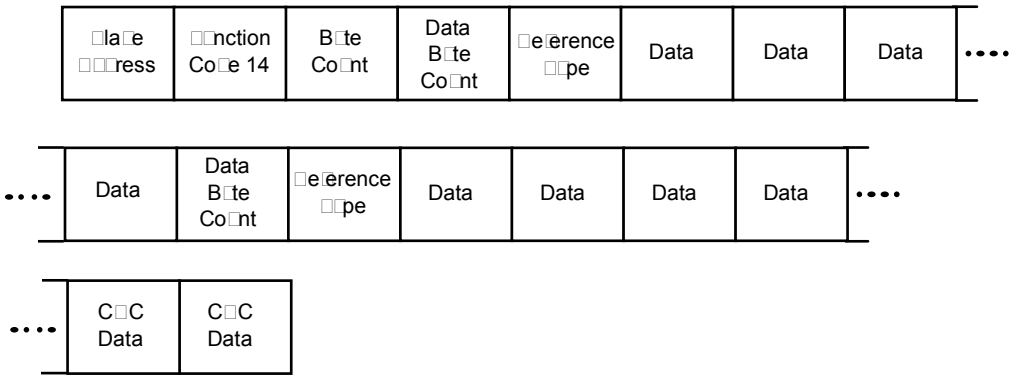

For Infrared Transactions, add three BOFs (C0hex) at the beginning of each message and one EOF (FFhex) at the end of each message.

Byte Count

The Byte Count equals the number of bytes transmitted in either the request or response message and will be the minimum number required to transmit all requested data.

Data Byte Count

The Data Byte Count is the number of data bytes of the *sub response* including the Reference Type but not including itself. A floating point sub response has four bytes of data and one byte representing the reference type making the data byte count equal to five.

Reference Type Definitions

The Reference Type definition is always 06.
See examples in Subsection 9.3.1

File Number

The file number word contains the register number from the register address structure tables on page 3. Although the register address structure tables indicate up to 13 data registers are available for access, only register address 3 is currently supported.

Register Address

The register address word represents the tag ID number for the parameter(s) being accessed. The register address word is made up of two bytes—the MSB = 00 always. The LSB contains the tag ID number. The tag ID numbers represent the parameter's register address(es). See *Section 3* for the tag ID numbers.

Table 9-3 Register Address Format for Function Code 20

Register Address(es) (Decimal)	Register Address(es) (Hex)	Format
001 to 125	0001 to 00□D	**analog** □or□ atte□ □ata □2 registers □ □□□□ 32□□it □loating point□
128 to 255	0080 to 00□□	**integer** □or□ atte□ □ata □1 register □ 1□□□it integer□

9.3.1 Read Configuration Examples

Example #1

The following is an example of a request to read the Gain 1 value using Function code 20.

Request Message (Read (Gain 1) = ID Tag 001)

02 14 07 06 00 03 00 01 00 02 (CRC16)

Where:

02	=	Address
14	=	Function Code 20 (14 hex)
07	=	Byte Count
06	=	Reference Type
00,03	=	File Number (Access Data Value)
00,01	=	Register Address (Standard Access Gain 1 - Tag ID #1)
00 02	=	Register Count (Floating Point Data)
(CRC16)		

This is the response to the above request.

Response Message

02 14 06 05 06 3F C0 00 00 (CRC16)

Where:

02	= Address
14	= Function Code 20 (14 Hex)
06	= Byte Count
05	= Sub Message Length
06	= Reference Type (IEEE Floating Point)
3F C0 00 00	= 1.50 (Value of Proportional Band)
(CRC16)	

Example #2

The following is another example of a request and response message using Function code 20.

Request Message (Read LSP #1 = ID Tag 39 and LSP #2 = ID Tag 53)

02 14 0E 06 00 03 00 27 00 02 06 00 03 00 35 00 02 (CRC16)

Where:

02	=	Address
14	=	Function Code 20 (14 Hex)
0E	=	Byte Count
06	=	Reference Type (IEEE Floating Point)
00,03	=	File Number (Access Data Value)
00,27	=	Register Address (Standard Access LSP #1 - ID Tag 39)
00,02	=	Register Count to read (Floating Point Data)
06	=	Reference Type (IEEE Floating Point)
00,03	=	File Number (Access Data Value)
00,35	=	Register Address (Standard Access LSP #2 - ID Tag 53)
00,02	=	Register Count to read (Floating Point Data)
(CRC16)		

This is the response to the above request.

Response Message

02 14 0C 05 06 43 C8 00 00 05 06 44 60 00 00 (CRC16)

Where:

02	=	Address
14	=	Function Code 20 (14 Hex)
0C	=	Byte Count
05	=	Data Byte Count (Sub Message Length)
06	=	Reference Type (IEEE Floating Point)
43 C8 00 00	=	400.0 (Value of Local Setpoint #1)
05	=	Data Byte Count (Sub Message Length)
06	=	Reference Type (IEEE Floating Point)
44 60 00 00	=	896.0 (Value of Local Setpoint #2)
(CRC16)		

9.4 Function Code 21 (15h) - Write Configuration Reference Data

Introduction

Function Code 21 (15 Hex) is used in this instrument to allow writes of integer and floating point values to the configuration database and override values.

The configuration database of this instrument is located in EEROM. The override values are stored in RAM.

Integer format is used to write to “Digital” configuration items. Floating Point format is used to write to “Analog” configuration items as defined by the configuration ID tags.

Write Restrictions

Care should be taken not to exceed the 100,000 write limit of the EEROM.

Request and Response Formats

The Request and Response formats for Function code 21 (15 Hex) are shown below. Details for each block reference follow.

Request Message Format

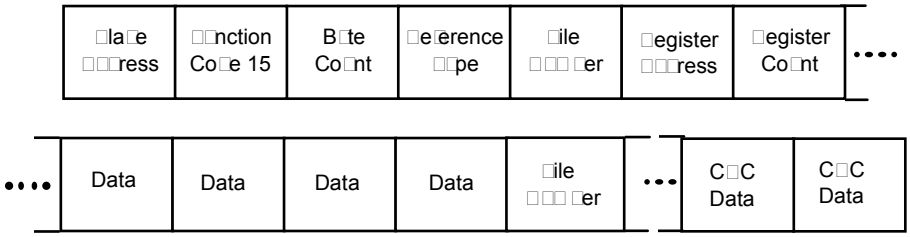

Response Message Format (echo back of request)

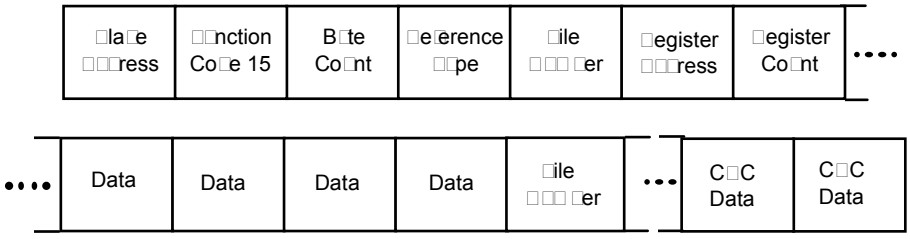

The register address is interpreted as the tag ID configuration number.

For Infrared Transactions, add three BOFs (C0hex) at the beginning of each message and one EOF (FFhex) at the end of each message.

Reference Type Definitions

The Reference Type definition is always 06.
See examples in Subsection 9.4.1

File Number

The file number word contains the register number from the register address structure shown in Table 9-1 and Table 9-2. Although the register address structure tables indicate up to 13 data registers are available for access, only register address 3 is currently supported.

Register Address

The register address is used to designate the tag ID number for the parameter being accessed. The register address is made up of two bytes—the MSB = 00 always. The LSB contains the RS422 tag ID number. The tag ID numbers represent the parameter's register address(es). See *Section 10* for the tag ID numbers.

Table 9-4 Register Address Format for Function Code 21

Register Address(es) (Dec)	Register Address(es) (Hex)	Format
001 to 125	0001 to 00□D	**analog** □or□atte□ □ata □2 registers □ □□□□ 32□□it □loating point□
128 to 215 □ 255	0080 to 00D□ □ 00□□	**integer** □or□atte□ □ata □2 registers □ □□□□ 32□□it □loating point□

Unrestricted Registers

As mentioned previously, all register data is stored in the EEROM of this instrument with some exceptions. These exceptions were made to allow write access to override information. The registers, which are designated as Override values, are listed below. These registers do not have restrictions on the number of writes.

ID Tag	*Register Number*	*UDC Usage*
125	(7Dh)	Computer Setpoint

Restrictions on Parameter Numbers in One Message

The maximum number of writeable parameters per write request is 1.

9.4.1 Write Configuration Examples

Example #1

The following is an example of a request to write the Gain 1 value using Function code 21 (15 Hex).

Request Message (Write Gain 1= 1.5 "ID Tag 1")

02 15 0B 06 00 03 00 01 00 02 3F C0 00 00 (CRC16)

Where:

02	=	Address
15	=	Function Code 21 (15 Hex)
0B	=	Byte Count
06	=	Reference Type (IEEE Floating Point)
00 03	=	File Number (Access Data Value)
00 01	=	Register Address (Standard Access - Gain 1 - ID Tag 1)
00 02	=	Register Count (Floating Point Data)
3F C0 00 00	=	1.50
(CRC16)		

This is the response to the above request.

Response Message (The response is an echo of the request)

02 15 0B 06 00 01 00 02 00 02 3F C0 00 00 (CRC16)

10 Modbus Read, Write and Override Parameters plus Exception Codes

10.1 Overview

Introduction

This section contains information concerning Reading, Writing, and Overriding parameters in this instrument. There are two types of parameters:

- **Data Transfer**—These parameters include reading control data, option status, and reading or changing setpoints.
- **Configuration Data**—All the configuration data is listed in the order in which it appears in the controller.

Each type of parameter has the identifying codes listed with it.

What's in this section?

The following topics are covered in this section.

TOPIC		See Page
10.1	Overview	113
10.2	Reading Control Data	115
10.3	Miscellaneous Read Onlys	115
10.4	Configuration Parameters	116
10.5	Modbus RTU Exception Codes	125

General Information

Non-volatile Memory Retention

- This controller uses non-volatile memory to store configuration data. These memories are guaranteed to retain data for a minimum of ten years as long as the data is not written and erased more than 10,000 times. In order not to exceed this number, it is strongly recommended that configurations which change rapidly such as Computer Setpoint use the Override feature which does not affect non-volatile memory.

Analog Parameters

- Whenever analog register addresses 0001 through 0074 (those that can be changed via communications) are changed, a Write cycle occurs after receipt of the message and the response is returned.

Override Parameters

- Override analog register address 007D (computer setpoint) is not stored in non-volatile memory. It can be changed as frequently as desired with no effect on non-volatile memory retentivity, but the controller must remain in the slave mode.

Digital Parameters

- Whenever digital configuration register addresses 0080 through 00FA are updated via communications, the non-volatile memory is updated as soon as the message is received.

Communications Transfer Rates

- Reads minimum 20mS and writes minimum 200mS

Supported Function Codes

- IR port 20 and 21
- RS485 and Ethernet ports 1,2,3,4,6,16,17,20,21

Communications Modes of Operation

- When the Shed Timer is enabled and a write or override occurs the controller will enter Slave Mode. The keypad is locked from the operator. The purpose of this mode is that if communications is lost and the shed timer times out then the controller will enter a known state of operation. The configuration of the “Shed Mode and Output” and Shed Setpoint Recall are used to configure the controller’s shed state. While in Slave Mode pushing the MAN/AUTO key enters Emergency Manual mode. The local operator then has control of the output. The controller is in Monitor Mode if the Shed timer is disabled.

10.2 Reading Control Data

Overview

The following control data can be read from this instrument:

- Input 1

Register Addresses

Use the identifying codes listed in Table 10-1 to read the specific items.

A Write request for these codes will result in an Error message.

Table 10-1 Control Data Parameters

Parameter Description	Register Address		Data Type	Access	Data Range or Enumerated Selection
	Hex	Decimal			
□np□t □1	□B	123	□□	□D	□n □ngineering □nits or □ercentage
□□□1	2□	30	□□	□□W	□n □ngineering □nits Within □et point □i□its

10.3 Miscellaneous Read Onlys

10.3.1 Register Addresses for Read Onlys

The identifying register addresses listed in Table 10-2 represent some information that is Read only. No Writes allowed.

Table 10-2 Miscellaneous Read Onlys

Parameter Description	Register Address		Data Type	Access	Data Range or Enumerated Selection
	Hex	Decimal			
Software Type	008B	139	INT	RD	READ only 38 = UDC2500 Limit
Software Version	00A7	167	INT	RD	READ only Value less than 255

10.4 Configuration Parameters

Overview

Listed on the next pages are the identifying codes for the parameters in the various Set-up Groups in this instrument. Most of the parameters are configurable through the hosts. Some are Read Only and are indicated as such and cannot be changed.

Reading or Writing

Do a Read or Write, depending on your requirements, using the identifying code and format code listed in the tables. The range or selection available for each range is listed in the tables.

10.4.1 Lock

The identifying register addresses listed in Table 10-3 -lists all the register addresses and ranges or selections for the function parameters in Set-up Group Lock.

Table 10-3 Set-up Group Lock

Parameter Description	Register Address		Data Type	Access	Data Range or Enumerated Selection
	Hex	Decimal			
Security Value	00	80	FP	R/W	0 to 9999
Lockout	0084	132	INT	R/W	0 = None 1 = Calibration 2=Configuration 3= Set Point

10.4.2 Limit

The identifying register addresses listed in Table 10-4 lists all the register addresses and ranges or selections for the function parameters in Set-up Group Limit.

Table 10-4 Set-up Group Limit

Parameter Description	Register Address		Data Type	Access	Data Range or Enumerated Selection
	Hex	Decimal			
High/Low Limit	0088	136	INT	R/W	0 = Low Limit 1 = High Limit
Power Up Selections	0089	137	INT	R/W	0 = Normal 1 = Reset
Limit Relay Latched	00C4	196	INT	R	0 = Not Latched 1 = Latched if in Limit Condition
Set Point Max	0007	7	FP	R/W	0 to 100% of PV (Engineering Units)
Set Point Min	0008	8	FP	R/W	0 to 100% of PV (Engineering Units)
Display	00B1	177	INT	R/W	0 = PV 1= Set Point

10.4.3 Input 1

Table 10-5 lists all the register addresses and ranges or selections for the function parameters in Set-up Group Input 1.

Table 10-5 Set-up Group – Input 1

Parameter Description	Register Address		Data Type	Access	Data Range or Enumerated Selection
	Hex	Decimal			
Input 1 Type	009F	159	INT	R/W	1 = B TC 2 = E TC H 3 = E TC L 4 = J TC H 5 = J TC M 6 = J TC L 7 = K TC H 8 = K TC M 9 = K TC L 10 = NNM H 11 = NNM L 12 = Nicrosil H TC 13 = Nicrosil L TC 14 = R TC 15 = S TC 16 = T TC H 17 = T TC L 18 = W TC H 19 = W TC L 20 = 100 PT RTD 21 = 100 PT LO RTD 22 = 200 PT RTD 23 = 500 PT RTD 24 = Radiamatic RH 25 = Radiamatic RI 26 = 0-20 mA 27 = 4-20 mA 28 = 0-10 mV 29 = 0-50 mV 30 = 100 mV 31 = 0-5 Vdc 32 = 1-5 Vdc 33 = 0-10 Vdc 34 = Unused 35 = Unused 36 = Thermocouple Differential 37 = PR40-PR20 Thermocouple
	ATTENTION Changing the Input Type will result in the loss of Field Calibration values and will restore the Factory Calibration values.				

Parameter Description	Register Address		Data Type	Access	Data Range or Enumerated Selection
	Hex	Decimal			
Input 1 Transmitter Characterization	00A9	169	INT	R/W	0 = B TC 1 = E TC H 2 = E TC L 3 = J TC H 4 = J TC M 5 = J TC L 6 = K TC H 7 = K TC M 8 = K TC L 9 = NNM H 10 = NNM L 11 = Nicrosil H TC 12 = Nicrosil L TC 13 = R TC 14 = S TC 15 = T TC H 16 = T TC L 17 = W TC H 18 = W TC L 19 = 100 PT RTD 20 = 100 PT LO RTD 21 = 200 PT RTD 22 = 500 PT RTD 23 = Radiamatic RH 24 = Radiamatic RI 25 = Linear 26 = Square Root
Input 1 High Range Value	001D	029	FP	R/W	–999. to 9999. Engineering Units (Linear types only)
Input 1 Low Range Value	001E	030	FP	R/W	–999 to 9999. Engineering Units (Linear types only)
Input 1 Ratio	006A	106	FP	R/W	–10.00 to 10.00
Input 1 Bias	0069	105	FP	R/W	-10 to 10
Input 1 Filter	002A	042	FP	R/W	0 to 120 seconds
Burnout (Open Circuit Detection)	0085	133	INT	R	0 = Downscale 1 = Upscale
Emissivity	0017	023	FP	R/W	0.01 to 1.00

10.4.4 Options

Table 10-7 lists all the register addresses and ranges or selections for the function parameters in Set-up Group Options.

Table 10-6 Set-up Group – Options

Parameter Description	Register Address		Data Type	Access	Data Range or Enumerated Selection
	Hex	Decimal			
Auxiliary Output	009E	158	INT	R/W	0 = None 1 = Not Used 2 = Not Used 3 = PV
Low Scaling Factor	0031	049	FP	R/W	Within the range of the selected variable in ID ~~134~~ 158
High Scaling Factor	0032	050	FP	R/W	Within the range of the selected variable in ID ~~134~~ 158
Auxiliary Output Range	00EC	236	INT	R/W	0 = 4-20 mA 1 = 0-20 mA
Digital Input #1 (External Reset)	00BA	186	INT	R/W	0 = None 1 = Enable 2 = External Reset Only

10.4.5 Communications

Table 10-7 lists all the register addresses and ranges or selections for the function parameters in Set-up Group Communications.

Table 10-7 Set-up Group – Communications

Parameter Description	Register Address		Data Type	Access	Data Range or Enumerated Selection
	Hex	Decimal			
Communication Address	004D	77	FP	R/W	1 - 99
Communications Type	00E7	231	INT	R/W	0 = None 1 = Disable 2 = RS-485 Modbus 3 = Ethernet
IR Port Enable	00F1	241	INT	R/W	0 = Disable 1 =- Enable
Baud Rate	00E8	232	INT	R/W	0 = 4800 1 = 9600 2 = 19200 3 = 38400
Transmit Delay	004E	78	FP	R/W	Response Delay in ms (1 to 500) +6ms
Floating Point Byte Order	00E9	233	INT	R/W	0 = Big Endian 1 = Big Endian Byte Swap 2 = Little Endian 3 = Little Endian Byte Swap
Shed Enable	00EA	234	INT	R/W	0 = Enable 1 = Disable
Shed Time	004F	79	INT	R/W	0 = No Shed 1 = 255 sample periods
Comm Data Units	00A1	161	INT	R/W	0 = Percent 1 = Engineering Units

10.4.6 Alarms

Table 10-8 lists all the register addresses and ranges or selections for the function parameters in Set-up Group Alarms.

Table 10-8 Set-up Group – Alarms

Parameter Description	Register Address		Data Type	Access	Data Range or Enumerated Selection
	Hex	Decimal			
Alarm 1 Setpoint 1 Type	008C	140	INT	R/W	0 = None 1 = Not Used 2 = Not Used 3 = PV 4 = Deviation 5 = Not Used 6 = Alarm on Shed 7 = Not Used 8 = Not Used 9 = Not Used 10 = T/C Warning 11 = Failsafe or T/C Fail 12 = PV Rate of Change 13 = Alarm on Digital Input
Alarm 1 Setpoint 1 Value	0009	009	FP	R/W	Within the range of selected parameter or PV span for deviation alarm
Alarm 1 Setpoint 2 Type	008E	142	INT	R/W	Same as 140
Alarm 1 Setpoint 2 Value	000A	010	FP	R/W	Within the range of selected parameter or PV span for deviation alarm
Alarm 2 Setpoint 1 Type	0090	144	INT	R/W	Same as 140
Alarm 2 Setpoint 1 Value	000B	011	FP	R/W	Within the range of selected parameter or PV span for deviation alarm
Alarm 2 Setpoint 2 Type	0092	146	INT	R/W	Same as 140
Alarm 2 Setpoint 2 Value	000C	012	FP	R/W	Within the range of selected parameter or PV span for deviation alarm

Parameter Description	Register Address		Data Type	Access	Data Range or Enumerated Selection
	Hex	Decimal			
Alarm 1 Setpoint 1 Event	008D	141	INT	R/W	0 = Low Alarm 1 = High Alarm
Alarm 1 Setpoint 2 Event	008F	143	INT	R/W	0 = Low Alarm 1 = High Alarm
Alarm 2 Setpoint 1 Event	0091	145	INT	R/W	0 = Low Alarm 1 = High Alarm
Alarm 2 Setpoint 2 Event	0093	147	INT	R/W	0 = Low Alarm 1 = High Alarm
Alarm Hysteresis	0029	041	FP	R/W	0.0 to 100% of output or span
Alarm Latching for Output 1	00C8	200	INT	R/W	0 = Non Latching 1 = Latching
Alarm States	00C9	201	INT	R/W	State = 0 = Not in Alarm State = 1 = In Alarm Bit 0 = Alarm 11 State Bit 1 = Alarm 12 State Bit 2 = Alarm 21 State Bit 3 = Alarm 22 State
Alarm 1 Blocking	00CA	202	INT	R/W	0 = Disable 1 = AL1 2 = AL 2 3 = AL 1 2
Diagnostic Alarm	009A	154	INT	R/W	0 = Disable 1 = Alarm 1 2 = Alarm 2

10.4.7 Display

Table 10-9 lists all the register addresses and ranges or selections for the function parameters in Set-up Group Display.

Table 10-9 Set-up Group – Display

Parameter Description	Register Address		Data Type	Access	Data Range or Enumerated Selection
	Hex	Decimal			
Decimal Point Location	009B	155	INT	R/W	0 = XXXX – Fixed 1 = XXX.X – Floating decimal point to one 2 = XX.XX – Floating decimal point to two
Temperature Units	0081	129	INT	R/W	0 = °F 1 = °C 2 = None
Power Frequency	00A6	166	INT	R/W	0 = 60 Hertz 1 = 50 Hertz
Lower Display	00AE	174	INT	R/W	0 = Enable 1 = Disable
TC Diagnostics	009F	159	INT	R/W	0 = Enable 1 = Disable

10.5 Modbus RTU Exception Codes

Introduction

When a master device sends a query to a slave device it expects a normal response. One of four possible events can occur from the master's query:

- *Slave device receives the query without a communication error and can handle the query normally.*
  It returns a normal response.
- *Slave does not receive the query due to a communication error.*
  No response is returned. The master program will eventually process a time-out condition for the query.
- *Slave receives the query but detects a communication error (parity, LRC or CRC).*
  No response is returned. The master program will eventually process a time-out condition for the query.
- *Slave receives the query without a communication error but cannot handle it (i.e., request is to a non-existent coil or register).*
  The slave will return with an exception response informing the master of the nature of the error (Illegal Data Address.)

The exception response message has two fields that differentiate it from a normal response:

Function Code Field:
In a normal response, the slave echoes the function code of the original query in the function code field of the response. All function codes have a most-significant bit (MSB) of 0 (their values are below 80 hex). In an exception response, the slave sets the MSB of the function code to 1. This makes the function code value in an exception response exactly 80 hex higher than the value would be for a normal response.

With the function code's MSB set, the master's application program can recognize the exception response and can examine the data field for the exception code.

Data Field:
In a normal response, the slave may return data or statistics in the data field. In an exception response, the slave returns an exception code in the data field. This defines the slave condition that caused the exception.

Query

Example: Internal slave error reading 2 registers starting at address 1820h from slave at slave address 02.

02 03 18 20 00 02 CRC CRC

Response

Example: Return MSB in Function Code byte set with Slave Device Failure (04) in the data field.

02 83 04 CRC CRC

Table 10-10 Modbus RTU Data Layer Status Exception Codes

Exception Code	Definition	Description
01	Illegal Function	The message received is not an allowable action for the addressed device
02	Illegal Data Address	The address reference in the function dependent data section of the message is not valid in the addressed device
03	Illegal Data Value	The value reference at the addressed device location is no within range
04	Slave Device Failure	The addressed device has not been able to process a valid message due to a bad device state
05, 06	Slave Device Busy	The addressed device has elected a message due to a process state Retry later
07	NAK, Negative Acknowledge	The addressed device cannot process the current message issue a UPLOAD to obtain device dependent error data
09	Buffer Overflow	The data to be returned for the requested number of registers is greater than the available buffer space *Function Code 20 only*

11 Ethernet TCP/IP

11.1 Overview

Ethernet parameters can only be configured via the Process Instrument Explorer software.

Ethernet IP Address is 10.0.0.2 as shipped from the Factory.

The MAC address is printed on the case label of each instrument.

When constructing a network, it is recommended that a Switch be used to connect UDCs to a LAN rather than using a Hub. This is because a Switch passes only those messages for IP addresses that are connected to the Switch while a Hub passes all message traffic. Using a Switch thus improves the overall throughput of the traffic to and from the UDCs.

12 Further information

12.1 Modbus RTU Serial Communications

Refer to Honeywell document 51-52-25-66 Modbus RTU Serial Communications User Manual.

12.2 Modbus Messaging on TCP/IP

Refer to Honeywell document 51-52-25-121 MODBUS Messaging on TCP/IP Implementation Guide.

12.3 How to Apply Digital Instrumentation in Severe Electrical Noise Environments

Refer to Honeywell document 51-52-05-01 How to Apply Digital Instrumentation in Severe Electrical Noise Environments.

13 Index

A

Alarm Blocking, 43
Alarm Hysteresis, 123
Alarm Outputs, 9
Alarm Relay Output Failure, 96
Alarm Relays, 13
Alarm Setpoints, 58
Alarm Setpoints, 58
Alarms Set Up Group, 40
Ambient Temperature, 10
Analog Input Signal Failure Operation, 8
Analog Inputs, 8
Analog Parameters, 114
Annunciators, 53
Application Related Problems, 88
Auxiliary Output, 35
Auxiliary Output Calibration, 83
Auxiliary Output Calibration Procedure, 85
Auxiliary Output Failure, 99

B

Background Tests, 91
Baud Rate, 121
Baud Rate, 37
Bias, 33
Blocking, 123
Burnout Protection, 33
Byte Count, 106

C

Calibration Mode, 81, 86
Calibration Steps, 71
CE Conformity (Europe), 6
Communicationaddress, 121
Communications Failure, 98
Communications Modes Of Operation, 114
Communications Set Up Group, 37
Communications Station Address, 37
Communications Transfer Rates, 114
Communications Type, 121
Composite Wiring Diagram, 18
Configuration, 26
Configuration Parameters, 116
Configuration Procedure, 28
Configuration Prompt Hierarchy, 27
Configuration Record Sheet, 49
Contact Input, 57
Control Relays, 13
Control/Alarm Circuit Wiring, 16
Controller Failure Symptoms, 93
Controller Grounding, 16
Controller Output Types, 9
Customer Support, 88

D

Decimal Point, 44
Deviation, 35
Diagnostic Alarm, 123
Digital Input Option, 57
Digital Inputs, 8, 35
Digital Parameters, 114
Dimensions, 14
Display, 30
Display Mode, 53
Display Set Up Group, 44

E

Electrical Considerations, 16
Electrical Noise Precautions, 17
Electromechanical Relay Output, 21
Email Configuration Screen, 47
Emissivity, 34
Environmental And Operating Conditions, 10
Equipment You Will Need To Calibrate, 73
Error Messages, 54
Ethernet Communications Address, 67, 68
Ethernet Communications Option Connections, 23
Ethernet Configuration Screen, 46
Ethernet Connection, 65
Ethernet Ip Address, 127
Ethernet Status, 64
Ethernet Tcp/Ip, 37, 127
Ethernet Tcp/Ip Communications Interface, 9
External Interface Option Connections, 22, 24
External Reset, 57
External Wiring, 17

F

Factory Calibration, 80, 85
Factory Configuration, 100
Failsafe Manual Mode, 90
Features, 1
Field Calibration, 70
Field Wiring, 73
File Number, 107, 111
Filter, 33
Floating Point Byte Order, 121

Floating Point Parameter Type, 105
Frequency, 10
Function Code 20, 106
Function Code 21, 110
Function Codes 20 And 21, 104
Function Prompts, 27

H

High And Low Limit Indication, 54
High Limit Controller, 1
High Setpoint Limit, 30

I

Ice Bath, 73
Infrared Communications, 5
Infrared Communications, 9
Infrared Communications, 37
Input 1 Actuation Type, 31
Input 1 And Input 2 Wiring Terminals, 73
Input 1 Calibration Procedure, 79
Input 1 Connections, 20
Input 1 High Range Value, 32
Input 1 Low Range Value, 33
Input 1 Set Up Group, 31
Input 1 Set Up Wiring, 74
Input Calibration, 70
Installation, 7
Installation Related Problems, 87
Integer Parameter Type, 105
IR Port Enable, 121
Isolation, 9

K

Key Error, 52
Key Functions, 3
Keyboard Failure, 97

L

Latching Output Relay Failure, 96
Limit, 117
Limit And Alarm Relay Contact Information, 13
Limit Control Application Diagram, 25
Limit Controller Wiring, 25
Limit Set Up Group, 30
Limit Setpoint, Setting, 56
Line Voltage, 10
Line Voltage Wiring, 16
Link Length, 37
Local Area Network (Lan) Settings, 67
Lock Set Up Group, 29
Lockout Feature, 52
Lockout Levels, 52
Loop Data – Alarm Details, 61
Loop Data – Digital Input Details, 62
Loop Data Screen, 59
Loopback, 38
Low Limit Controller, 1
Low Setpoint Limit, 30

M

Mains Power Supply, 16, 19
Mechanical Shock, 10
Minimum And Maximum Range Values, 71
Modbus, 37
Modbus Read, Write And Override Parameters, 113
Modbus Rtu Function Codes, 104
Model Number Interpretation, 11
Monitoring Your Limit Controller, 53
Mounting, 14
Mounting Method, 15
Mounting Procedure, 15

N

Non-Volatile Memory Retention, 113

O

Open Collector Relay Output, 22
Operating Principles, 55
Operating The Limit Controller, 50
Operating Your Limit Controller, 55
Operator Interface, 2, 51
Options Set Up Group, 35
Output Calibration, 83
Override Parameters, 114

P

P.I.E. Tool, 65
P.I.E. Tool Ethernet And Email Configuration Screens, 46
P.I.E. Tool Maintenance Screens, 59
Parts Identification, 102
Parts List, 101
Permissible Wiring Bundling, 17
Physical Considerations, 14
Power Consumption, 9
Power Failure Symptoms, 95
Power Inrush Current, 9
Power Line Frequency, 44
Power Up, 30
Power Up Logic, 55
Power-Up Tests, 90
Pre-Installation Information, 8
Process Instrument Explorer, 4

R

Read Onlys, 115
Reading Control Data, 115
Register Address, 107, 111
Register Address Structure, 105
Register Addresses, 116
Register Count, 105
Relative Humidity, 10
Relay Contacts, 58
Removing The Chassis, 103
Reset The Latching Relay, 57
Resistance Thermometer Device, 73
Restore Input Factory Calibration, 80
Restore Output Factory Calibration, 85
RsS422/485 Modbus Rtu Comm Interface, 9
RTD Inputs, 75

S

Security Code, 51
Security Code Entry, 52
Set Up Group, 27
Set Up Wiring Procedure For Auxiliary Output, 84
Shed Enable, 121
Shed Enable, 38
Shed Setpoint Recall, 38
Shed Time, 37
Shed Time, 121
Shed Time, 38
Software Type, 115, 116, 117
Software Version, 115, 117
Software Version Number, 89
Solid State Relay Output, 21
Specifications, 8
Status Data, 63
Status Tests, 90
Stray Rejection, 8
Suppression Devices, 17

T

T/C Source, 73
Temperature Units, 44
Test Failures, 90
Thermocouple Failing, 40
Thermocouple Inputs Using A Thermocouple Source, 75
Thermocouple Inputs Using An Ice Bath, 74
Thermocouple Warning, 40
Timing Out From Lower Display, 53
Transmit Delay, 121
Transmitter Characterization, 32
Troubleshooting Aids, 88
Troubleshooting Procedures, 94
Troubleshooting/Service, 87
TX Delay, 38

U

UDC2500 Limit Controllers, 1

V

Vibration, 10
Viewing The Operating Parameters, 53
Voltage And Resistance Equivalents For 0% And 100% Range Values, 71

W,X,Y,Z

Weight, 9
Wiring, 16
Wiring Bundling, 17
Wiring Connections For Calibrating Auxiliary Output, 84
Wiring Connections For Radiamatic, Milliampere, Millivolts, Or Volts (Except 0 To 10 Volts), 76, 78
Wiring Connections For Rtd (Resistance Thermometer Device), 75
Wiring Diagrams, 18
Wiring The Controller, 18

14 Sales and Service

□or application assistance, c□rrent speci□ications, pricing, or na□e o□the nearest □□thori□e□ Distri□□tor, contact one o□the o□ices □elo□□

ASIA PACIFIC
Control Products
□sia □aci□ic
□ea□□□arters
□hone□□□□5□□355□2828
□ax□□□□5□□445□3033

Asia Pasific Global Technical Support Field Instruments
□hone□□□5 □580 315□
□ax□□□5 □445□3033
Process Instruments
□hone□□□03□□□□50 4□□□
□ax□□□03□□□58 8□22

Australia
□one□□ell □i□ite□
□hone□□□□1□□□384□ 1255
□□□□□□□1□□□3840 □481
□oll □ree 1300□3□□3□3□
□oll □ree □ax□ 1300□3□□04□□0

China – PRC - Beijing
□one□□ell China □nc□
□hone□□□8□□10□8458□ 3280
□ax□□□8□□10□8458□4□50

China – PRC - Shanghai
□one□□ell China □nc□
□hone□□8□□21□525□□ 45□8
□ax□□8□□21□□23□□282□

China – PRC - Chengdu
□one□□ell China □nc□
□hone□□□8□□28□8□□8□ □348
□ax□□□8□□28□8□□8□□0□1

China – PRC - Xi'an
□one□□ell China □t□ □ □i□an□
□hone□□□8□□2□□8833□ □4□0
□ax□□□8□□2□□8833□□48□

China – PRC Shenzhen-
□one□□ell China □nc□
□hone□□□8□□□55□2518□ 122□
□ax□□□8□□□55□2518□ 1221

Indonesia
□□ □one□□ell □n□onesia
□hone□□□□2□21□535□ 8833
□□□□□□□2□21□53□□ 1008

India □□to□ation □n□ia
□one□□ell □t□□
□hone□□□□1□5□03□□400
□ax□□□□1□5□03□□□00

Japan □one□□ell □nc□
□hone□□□81□3 □□30 □150
□ax□□□81□3 □□30 □228

Malaysia
□one□□ell □ngineering □□n Bh□
□hone□□□□0□3□□□50□ 4□□□
□ax□□□□0□3□□□58□8□22

New Zealand
□one□□ell □i□ite□
□hone□□□□4□□□□23□5052
□ax□□□□4□□□□23□50□0
□oll □ree 0800□202□088

Philippines
□one□□ell □□ste□s □□hilippines□□nc□
□hone□□□□3□2□□33□ 2830□31□
□3□1□□1□□2
□ax□□□□3□2□□38□4013

Singapore
□one□□ell □te □t□□
□hone□□□□5□□580 32□8
□ax□□□□5□□445□3033

South Korea
□one□□ell □orea Co □t□
□hone□□□822□□□□ □315
□ax□□□822□□□2 □015

Thailand
□one□□ell □□ste□s □□hailan□□□t□□
□hone□□□□□2□□□3□30□□
□□□□□□□□2□□□3□308□

Taiwan R.O.C.
□one□□ell □ai□an □t□□
□hone□□□88□2□2245□ 1000
□□□□□□88□2□2245□3241

SE Asia Countries
see □one□□ell □te □t□ □□ingapore□
□or□
□a□istan
Ca□ □o□ia
□ □a□
□aos
M□an□ar
□ietna□
□ast □i□or

SE Asia Countries
see □one□□ell □□to□ation □n□ia □t□ □or□
Bangla□esh
□epal
□ri □an□a

EUROPE
Austria
□one□□ell □□stria □ □ □□
□hone□□43 □31□400123
□□□□□43 □31□4001□

Belgium
□one□□ell □□□□□
□hone□□32 □0□2 □28 24 0□
□□□□□32 □0□2 □28 22 45

Bulgaria
□one□□ell □□ □D
□hone□□□35□□2 40 20 □00
□□□□□□35□□2 40 20 □□0

Czech Republic
□one□□ell spol□s□r□o□
□hone□□420 242 442 232
□□□□420 242 442 131

Denmark
□one□□ell □□□
□hone□□□45□3□55 55 55
□□□□□45□3□55 55 58

Finland
□one□□ell □ □
□hone□□358 □0□20□52 2□53
□□□□358 □0□20□52 2□51

France
□one□□ell □□
□hone□□33 □0□1 □01□80□5
□□□□33 □0□1 □01□8201

Germany
□one□□ell □□
□hone□□4□ □□□80□433□
□□□□4□ □□□80□4□□33□

Hungary
□one□□ell □t□
□hone□□3□□1□451 4300
□□□□3□□1□451 4343

Italy
□one□□ell □p□□
□hone□□3□ 02 □214□ 30□□
3□5
□□□□3□ 02□214□3□□

The Netherlands
□one□□ell B□□
□hone□□31 □0□20 5□5□200
□□□□31 □0□20 5□5□210

Norway
□one□□ell □□□
□hone□45□3□ 55 55 55

Poland
□one□□ell □p□o□o
□hone□□48□22□□0□0□00
□□□□48□22□□0□0□01

Portugal
□one□□ell □ort□gal □□a
□hone□351 21 424 5000
□□□□351 21 424 50 □□

Romania
□one□□ell B□charest
□hone□□40 □0□21 231□43□
□□□□40 □0□21 231□43□

Russian Federation (RF),
□□□ □□one□□ell□
□hone□□□ □0□5□□□□ □8 00
□□□□□□□ □4□5□□□□ □□ □4

Slovak Republic
□one□□ell s□□o□
□hone□□421□2□5824□ 410
□□□□□421□2□5824□415

Spain
□one□□ell □□□□
□hone□□34 □0□□1313 □1 00
□□□□34 □0□□1313 □1 30

Sweden
□one□□ell □B
□hone□□□4□□8 □□5 55 00
□□□□□4□□8 □□5 5□00

Switzerland
□one□□ell □□
□hone□□41 18552448
□□□□□41□1 855 24 45

Turkey
□one□□ell □□r□e□ □□□□
□hone□□□0 21□5□8 □1 00
□□□□□0 21□5□5 □□35

Ukraine
□one□□ell
□el□□380□44□201 44 □4
□ax□380□44□201□44□□5

United Kingdom
□one□□ell Control □□ste□s □t□□
□hone□□44 □0□1344 □55251
□□□□□44 □0□1344 □55554

MIDDLE EAST
Abu Dhabi U A E
Mi□□le □ast
□ea□□□arters
□one□□ell Mi□□le □ast □t□□
□hone□□□□1 2 404124□
□□□□□□□1 2 443253□

Sultanate of Oman
□one□□ell □ Co □ □an □□C
□hone□□□□8 24 □01153□ □xt□33
□□□ □□□8 24 □8□351

Saudia Arabia
□one□□ell □□r□i □ra□ia □t□
Jubail Office
□hone□□□□□3□341□0140
□ax□□□□□3□341□021□
□one□□ell □□□C□
Dammam Office
□hone□00□□□38304584 □ax□
00□□□3833805□**Kuwait**

□one□□ell □□□ait □□C
□hone□□□□5 242 132□ to 3 □ax□□□□5 242 8315 an□
□hone□□□□5 32□ 2□34□1821
□ax□□□□5 32□ 1□14

AFRICA
Mediterranean & African Distributors
□one□□ell □p□
□hone□□3□ □02□250 10 □04
□□□□□3□ □02□250 10 □5□

South Africa (Republic of) and sub saharan
□one□□ell □o□thern □□rica
□one□□ell □□□□t□□□t□□
□hone□□2□ 11 □□58000
□□□ □2□ 118051504

NORTH AMERICA
Canada
□one□□ell □□D
□hone□1□800□3□33□0
□□□□1□800□5□5□4130

USA
□one□□ell □rocess □ol□tions,
□hone□1□800□343□0228
□□□□1□□1□□□□1□8251
□□ail□sc□cp□appssales□hone□□ell□co□

LATIN AMERICA
Argentina
□one□□ell □□□□C□
□hone□□□54□11□4383□ 3□3□
□□□□□□54□11□4325□□4□0

Brazil
□one□□ell □o Brasil □ Cia
□hone□□□55□11□□2□□□ 1□00
□□□□□□55□11□□2□□□1□05

Chile
□one□□ell Chile, □□□□
□hone□□□5□□2□233□0□88
□□□□□□5□□2□231□□□□□

Mexico
□one□□ell □□□□□e C□□□
□hone□□□52□55 525□□ 1□□□
□□□□□□52□55 55□0□2□85

Puerto Rico
□one□□ell □nc□
□hone□□□80□□□□2□□0□5
□□□□□□80□□□□2□0053

Trinidad □one□□ell □nc□
□hone□□□8□8□□24□3□□4
□□□□□□8□8□□24□3□□□

Venezuela □one□□ell C□
□hone□□□58□2□238□0211
□□□□□□58□2□238□33□1

Honeywell

Honeywell Process Solutions
Industrial Measurement and Control
512 Virginia Drive
Fort Washington, PA 19034

51□52□25□118 □e□□5 3 0□ □rinte□in □□□

www.honeywell.com/ps

WESTBRAND LIMIT CONTROLLER

WEST™ brand

Data Sheet

Controllers

NEW

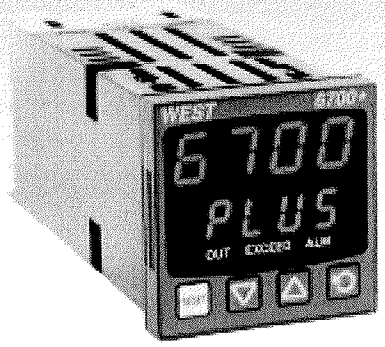

6700+
Limit Control

1/16 DIN Limit Controller

DESCRIPTION

The West 6700+ is part of a range of new generation '+' Series limit devices that share the same distinctive styling as the '+' Series temperature controllers.

The expanded '+' Series limit controller platform includes 1/4, 1/8 and 1/16 DIN models that incorporate numerous product specification, communication, display interface and software improvements that surpass competitive limit device offerings in ease of use, delivery and value-per dollar characteristic of the growing '+' Series product family.

By adding more versatile features and user-friendly functionality like digital inputs, an easy-to-use HMI, jumperless and auto-hardware configuration, 24VDC transmitter power supply and MODBUS communication across the range - the new generation West + Series limit controllers transform the complicated into the simple while saving you time (as much as 50% on product set-up), reducing inventory stock and virtually eliminating the likelihood of operator errors.

The + Series limit controllers are affordable, well-featured, easy to use and adaptable with performance features that work for you to make limit control simple.

APPLICATIONS:

Fail-safe protection device to prevent damage to equipment or products. It will shut down a process when a preset temperature is reached and cannot be reset by the operator until the process has returned to a safe condition.

INDUSTRIES

- Industrial and lab ovens/furnaces
- Plastics and thermal forming
- Packaging applications
- And any other where protection against out-of-range temperature condition is a critical requirement

FEATURES/BENEFITS

- ***NEW*** Improved easy-to-use HMI
- ***NEW*** Jumperless input configuration
- ***NEW*** Auto-hardware recognition
- ***NEW*** Improved Windows PC configuration software
- Process alarms
- Optional digital input and remote reset
- Optional 10V SSR driver output
- Faster communication speeds in selectable MODBUS or ASCII format
- FM Approved
- Backward compatible panel cutout, housing and terminal wiring capability

ISE, Inc. - 10100 Royalton Rd. - Cleveland, OH 44133 - Tel: (440) 237-3200 - Fax: (440) 237-1744
http://iseinc.com

WEST™ brand

6700+™

1/16 DIN Limit Controller

Affordable, Well-Featured, Easy to Use and Adaptable

SPECIFICATIONS*

STANDARD FEATURES

4 per second input sample rate

Universal input

NEW Improved HMI, 4 button operation, dual 4-digit LED display

NEW Plug-in output modules – install just the function needed

NEW Jumperless input configuration

NEW Auto-detection of installed output modules

NEW Improved PC configuration software

Process alarms

Construction/Enclosure: Rugged ABS Plastic housing

ENVIRONMENTAL CHARACTERISTICS

Operating Temp: 32° to 131°F (0° to 55°C)

Storage Temp: -4° to 176°F (-20° to 80°C)

Humidity: 20% to 95% non-condensing RH

ELECTRICAL

Supply Voltage: 100-240V, 50/60Hz, Optional 20-48VAC 50/60Hz or 22-65VDC

Power Consumption: 5W / 7.5 VA Maximum

DISPLAY:

Type: Red or Green, 7 segment LED, 4 digit upper and lower displays

Height: 10mm (0.39") upper display, 8mm (0.31") lower display

Annunciators: 5 LED indicators for output and status

INPUTS

T/C's: J, T, K, L, N, B, R, S, C; Pt Rh20% vs. Pt 40% Rh

RTD: 3-wire, PT100

DC Linear (Scalable –1999 to +9999)

Volts: 0-5V, 1-5V, 0-10V, 2-10V

DC milliamps: 0-20mA or 4-20mA

DC millivolts: 0-50mV, 10-50mV

OUTPUTS

Output 1 (limit relay) fixed; outputs 2 and 3 (alarm relay) are user-selectable and customized based on desired application; choose from the following output types

Max # of Outputs: 3 for alarm, 24 VDC transmitter power supply or retransmit of process value/limit trip setpoint

Limit Relay: SPDT; 240VAC 5A resistive; Lifetime >100,000 operations at rated voltage/current

Alarm Relay: Optional SPDT; 240VAC 2A resistive; Lifetime >500,000 operations at rated voltage/current

SSR Drive: Optional drive capability: >10 VDC nominal into 500 ohm minimum

DC Linear: Optional 0-20mA, 4-20mA into 500 ohm max; 0-10V, 1-5V, 2-10V, 0-5V into 500 ohm min; Outputs have 2% over/under drive applied; Accuracy +-0.25% (mA into 250 ohm load, V into 2k ohm load); degrading linearity to +-0.5% for increasing burden to specified limits

Triac: Optional 0.01 to 1A AC, 20 to 280Vrms, 47-63 Hz (Limit 2)

Transmitter Power Supply: Optional 24 VDC (Limit 1)

OUTPUT FUNCTIONS

Process Alarm: (reverse or direct)

Modes (Alarm 1 and 2): High/Low, Band, Deviation, logical OR/AND

Retransmit: Process value or limit setpoint

ELECTRICAL PERFORMANCE

Accuracy: ± 0.1% of input range ± 1 LSD (T/C CJC better than 1 degree C)

Input sample rate: 4 per second, 14 bit resolution

Impedance: >10M ohm for the thermocouple and mV ranges, 47k ohm for V ranges and 5 ohm for mA ranges

Sensor Break Detection: <2 seconds (except zero based DC ranges), limit output opens, low alarms activate for RTD, mA or V ranges

COMMUNICATIONS INTERFACE

User-selectable: 2-wire, RS-485 serial communications option with choice of Modbus RTU or ASCII protocol; 1200 to 19200 baud

PC Configuration: Offline configuration from serial port to dedicated configuration socket (comms option not required)

RATINGS/AGENCY APPROVALS

Conformance: FM, CE, UR, cUR UL File # 67237

Safety: EN61010

EMC: EN61326

PROTECTION

IEC IP66 (NEMA 4X) front panel

IEC IP20 (behind the panel protection)

PHYSICAL DIMENSIONS

Panel Cutout: 1.77" x 1.77" (45mm x 45mm)

Height: 1.89" (48mm)

Width: 1.89" (48mm)

Depth: 4.33" (110mm)

Weight: 0.46 lbs (0.21 kg)

Mounting: Plug in panel with fixing strap

OPTIONS/ACCESSORIES

Digital Input 1 (Optional): remote reset

NEW Faster RS-485 serial communication speeds and user-selectable (Modbus or ASCII) option

NEW 24VDC transmitter power supply option

Choice of Led colors: red/red, red/green, green/red, green/green

10VDC SSR Drive output

WARRANTY

3 Years

* Specifications are for base models with standard features only unless otherwise noted. Specifications subject to change without notice in accordance with our DBS policy of continuous improvement. All product and brand names are trademarks of their respective owners. All rights reserved.

West™ brand and 6700+™ are trademarks of Danaher Industrial Controls Group. All rights reserved.

© 2005 DICG Corp.

WEST™ brand

6700+™

1/16 DIN Limit Controller

Affordable, Well-Featured, Easy to Use and Adaptable

MODELS

Code 1: Model #	Code 2: Input Type	Code 3: Output 1	Code 4: Output 2	Code 5: Output 3	Code 6: Options	Code 7: Power Supply	Code 8: Display Color	Code 9: Option Slot B
P6701Z	☐	1	☐	☐	☐	☐	☐	0 0
1/16 DIN Limit Controller includes: jumperless input configuration, auto-detection hardware and improved PC configuration software	**1** 3-Wire RTD or DC mV **2** Thermocouple **3** DC mA **4** DC Voltage	**1** Limit relay output (fixed)	**0** Not fitted **1** Relay Output **2** DC Drive SSR Output **3** Linear 0-10V DC Output **4** Linear 0-20mA DC Output **5** Linear 0-5V DC Output **6** Linear 2-10V DC Output **7** Linear 4-20mA DC Output **8** Triac Output	**0** Not fitted **1** Relay Output **2** DC Drive SSR Output **3** Linear 0-10V DC Output **4** Linear 0-20mA DC Output **5** Linear 0-5V DC Output **6** Linear 2-10V DC Output **7** Linear 4-20mA DC Output **8** Transmitter Power Supply	**0** Not fitted **1** RS-485 Serial Communication **3** Digital Input	**0** 100-240 AC **2** 24-48 AC or DC	**0** Red upper and Lower **1** Green upper and lower **2** Red upper, Green lower **3** Green upper, Red lower	**00** Not fitted

DIMENSIONS - 1/16 DIN

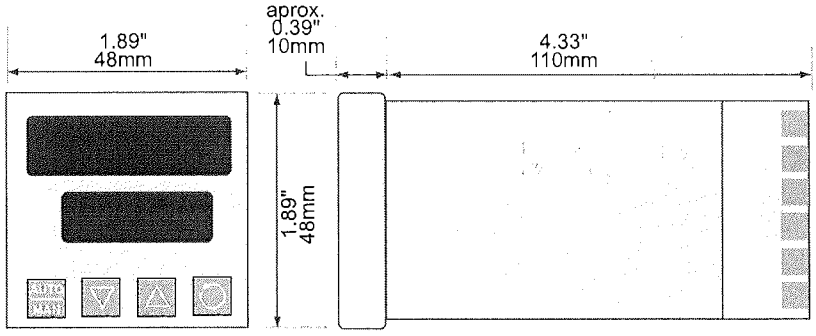

* Specifications are for base models with standard features only unless otherwise noted. Specifications subject to change without notice in accordance with our DBS policy of continuous improvement. All product and brand names are trademarks of their respective owners. All rights reserved.

West™ brand and 6700+™ are trademarks of Danaher Industrial Controls Group. All rights reserved.

© 2005 DICG Corp.

West Brand 6700+ Data Sheet (7/05)

West 6700
1/16 DIN Limit Alarm Unit

ISE, Inc.

The West 6700 provides a programmable safety cut out with optional outputs for annunciators and alarms. A latched relay cuts power to the process if it exceeds the safe value. The unit must be reset before the process can continue.

- **High or low trip**
- **5 amp latched relay**
- **Remote reset option**
- **2 Annunciators or alarms**
- **Exceed & relay indicators**
- **Configuration via PC**
- **RS485 comms**
- **PV retransmit option**

Technical Data

Features	
Output Configuration	Up to 3 Total. 1 latching trip relay, max 2 alarms relays, max 1 DC linear retransmit (PV or limit value)
Alarm 1 & 2 Types	Process high, process low, setpoint deviation, band, logical OR alarms or trip annunciator.
Limit Action	Latching relay output when PV exceeds set value. Selectable for high or low trip activation.
Output Reset Action	Limit output can be reset only when exceed condition is absent. Local or remote reset options.
Annunciator Reset Action	Annunciator output can be reset at any time. Local or remote reset options.
Human Interface	4 button operation, dual 4 digit 10mm & 8mm high LED displays. Exceed, output & alarm indicators
PC Configuration	Configuration via PC only. Dedicated config socket (comms option not required)
Input	
Thermocouple	J, K, R, S, T, B, L, & N.
RTD	3 Wire PT100, 50Ω per lead maximum (balanced)
DC Linear	0-20/4-20mA, 0-50/10-50mV, 0-5/1-5/0-10/2-10V. Scaleable -1999 to 9999, dec point available
Impedance	>100MΩ for Thermocouple and mV ranges, 47KΩ for V ranges and 4.7Ω for mA ranges
Accuracy	+/- 0.25% of input span +/- 1 LSD (T/C CJC better than 0.7°C)
Sampling	4 per second, 14 bit resolution approximately
Sensor Break Detection	<2 secs (except zero based DC ranges), control O/P's turn off, high alarms activate for T/C and mV ranges, low alarms activate for RTD, mA or V ranges.
Outputs & Options	
Limit Trip Relay	Contacts SPDT 5Amp resistive at 240V AC, >100,000 operations
Alarm Relays	Contacts SPDT 2Amp resistive at 240V AC, >500,000 operations
Retransmit Outputs	0-20/4-20mA into 500Ω max, 0-10/0-5V into 500Ω min. Accuracy typically +/- 0.25%
Communications	2 Wire RS485, 1200 to 9600 Baud, West ASCII
Remote reset option	Allows remote latched relay and annunciator reset, using volt free or TTL input (Reset = -0.6 to 0.8V, or contact closure)
Operating & Environmental	
Temperature & RH	0 to 55°C (-20 to 80°C storage), 20% to 95%RH non-condensing
Power Supply	90 to 264V 50/60Hz (optional 20 to 55V AC/22 to 65V DC), approx 4 Watts
Front Panel Protection	IEC IP66 (Behind panel protection is IP20)
Approvals and Certification	CE, UL & Ulc & FM

Dimensions

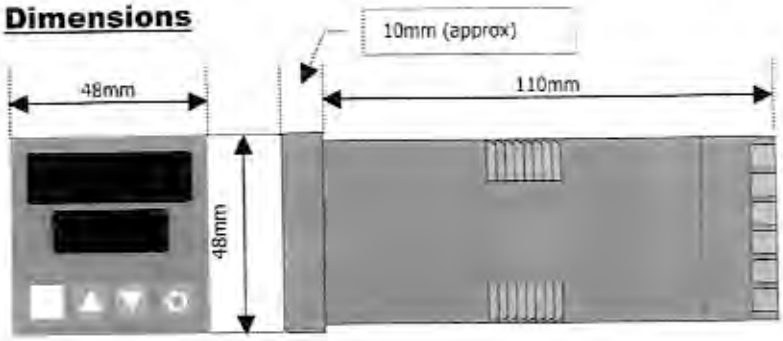

Panel Cut-out

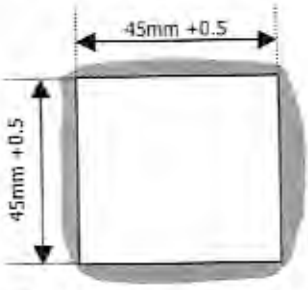

Connection Details

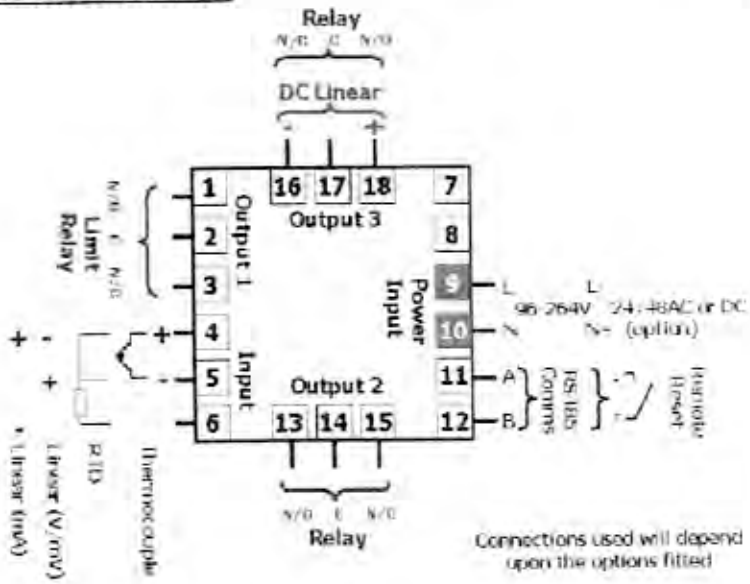

Field Reconfiguration

Input
Configurable to any type, no extra parts required
Output 1
Type is fixed as Limit Relay
Output 2
Configurable as Alarm or Annunciator, via plug-in Relay
Output 3
Configurable as Alarm or Annunciator via plug-in Relay, or retransmit using DC Linear module
Option Slot
Configurable as RS485 comms or Remote Reset, via plug-in modules

Order Code

N6701/ Z x x x x / xx

Input type
3 Wire RTD or DC mV 1
Thermocouple 2
DC mA 3
DC Voltage 4

Output 1
Limit Relay 1

Output 2
Not fitted 0
Relay Alarm 2 or Annunciator 1

Options and Power Supply
00 No Options/90-264V AC line supply
02 No Options/24-48V AC or DC line supply
10 RS485 Comms/90-264V AC line supply
12 RS485 Comms/24-48V AC or DC supply
30 Remote Reset/90-264V AC line supply
32 Remote Reset /24-48V AC or DC supply

Output 3
0 Not fitted
1 Relay Alarm 1 or Annunciator
3 DC 0-10V Re-Transmit PV or SP
4 DC 0-20mA Re-Transmit PV or SP
5 DC 0-5V Re-Transmit PV or SP
7 DC 4-20mA Re-Transmit PV or SP

http://instserv.com

ISE, Inc.
10100 Royalton Rd.
Cleveland, OH 44133 USA
Tel: (440) 237-3200 • Fax: (440) 237-1744

Toledo, OH area:
417 Tomahawk Dr.
Maumee, OH 43537
Tel: (419) 893-3330 • Fax: (419) 893-2151

SPECIFICATIONS (Apply to both UDC1000 and UDC1500)

Technical data

Accuracy	0.25 % of span ± 1 LSD
Temperature Stability	0.01 % of span per °C
Input Signal Failure	*Fail-safe output value:* Achieved when burnout is detected. Value depends on configuration. *For thermocouple and mV input detected by any lead break:* Upscale burnout *For RTD:* Burnout detected by any lead break *Current or volt input:* Burnout set by open circuit detection
Input Impedance	*Volt impedance:* 47 Kohms *Current input:* 4.7 ohms *All others:* 100 Mohms
Input Sampling Rate	Four samples per second
Input Filter	Digital filter configurable from front panel 0.0 (Off), from 0.5 seconds to 100.0 seconds in 0.5 seconds increment
Input Resolution	14 bits approximately, always four times better than display resolution
Input Isolation	Universal input isolated at 2500 V from all outputs except SSR and from power supply
Stray Rejection	*Common mode rejection:* > 120 dB at 50/60 Hz *Serial mode rejection:* > 500% of span at 50/60 Hz
Approvals	UL FM approval on the UDC1000 limit model Product design to meet CE MARK requirement
Control Output Type	***Type available:*** *Output 1:* DC, Electromechanical relay, SSR drive (open collector) *Output 2:* DC, Electromechanical relay, SSR drive (open collector) *Output 3:* DC (transmission output only), Electromechanical relay, SSR drive (open collector) ***DC output:*** 0-20 mA, 4-20 mA, 0-5 V, 0-10 V *Accuracy:* ± 0.5 % (250 ohms for mA, 2 Kohms for volt) *Resolution:* 80 bits in 250 ms (10 bits in 1 second typical > 10 bits in > 1 second) *Load impedance:* 500 ohms maxixmum for current output. 500 ohms minimum for volt output *Isolation:* Isolated 2500 V from all other inputs and outputs *Range selection method:* Jumper positioning and front panel code setting *Temperature stability:* 0.01 % / °C *Electromechanical relay:* SPDT contact *Resistive load:* 2 A at 120 V or 240 V *Life time:* > 500000 operations at rated voltage/current *SSR drive/TTL:* *Drive capability:* SSR > 4.3 Vdc into 250 ohms minimum *Isolation:* Not isolated from input and other SSR output
Alarms	*Maximum number of alarms:* 2 soft alarms setpoint + 1 loop alarm Alarm inhibit available on power up and setpoint switching *Alarm output:* Up to two relays or SSR output on outputs 2 and 3 *Types:* PV high or low, band, deviation high or low, loop *Combination alarms:* Logical "OR", "AND" or hysteresis of alarms available to individual hardware output

Technical data (continued)

Loop Control	*Automatic tuning type:* Pre-tune and self-tune *Proportional bands:* 0 (inactive), 0.5 % to 999.9 % of input span with 0.1% increments. Two proportional bands available for duplex mode *Reset:* Off or from 1s to 99 min 59 s *Rate:* From 0 s to 99 min 59 s *Manual reset:* from 0 to 100 % of output (single output), from –100 % to 100 % of output (dual output) *Deadband:* + 20 of PB1 + PB2 *ON/OFF hysteresis:* 0.1% to 10.0 % of input span *Auto/manual mode:* Front key selectable with bumpless transfer between automatic and manual mode *Cycle times:* Up to two cycle times available for time duplex control *Selection:* 0.5, 1, 2, 4, 8, 16, 32, 64, 128, 256, or 512 seconds *Setpoint ramp:* From 1 to 9999 engineering units per hour
Retransmission Output	Current and volt output of output 3 can be selected to retransmit the process value or setpoint
Communication Interface	RS485 – ASCII or Modbus RTU *Baud rate:* 1200, 2400, 4800 or 9600 baud *Link characteristics:* 32 drops maximum, ASCII or Modbus protocols, two wires
Mounting	Plug-in with pre-assembled mounting fixture
Wiring Connection	Screw terminals on the rear of the case (combination head)
Power Consumption	4 W
Physical (UDC1000)	*Weight:* 210 grams maximum *Height:* 48 mm / 1.89 in *Width:* 48 mm / 1.89 in *Depth:* 110 mm / 4.33 in *Cut out:* 45 mm x 45 mm / 1.77 in x 1.77 in
Physical (UDC1500)	*Weight:* 250 grams maximum *Height:* 96 mm / 3.78 in *Width:* 48 mm / 1.89 in *Depth:* 100 mm / 3.94 in *Cut out:* 45 mm x 92 mm / 1.77 in x 3.62 in
Environmental	*EMI Susceptibility:* Designed to meet EN55101 *EMI Emission:* Designed to meet EN55022 *Safety Considerations:* Designed to comply with IEC1010-1as far as applicable
Front Panel Sealing	NEMA 3 / IP65

Input Actuations

		Ranges	
		°F	°C
Thermocouple types (Fixed decimal)	R	32 – 3002	0 – 1650
	S	32 – 3000	0 – 1649
	J	32.0 – 401.7	0.0 – 205.4
	J	32 – 842	0 – 450
	J	32 – 1401	0 – 761
	T	-328 – 503	-200 – 262
	T	32 – 501.0	0– 260.6
	K	-328 – 1399	-200 – 760
	K	-328 – 2503	-200 – 1373
	L	32 – 402.2	0.0 – 205.7
	L	32 – 841	0 – 450
	L	32 – 1403	0 – 762
	B	211 – 3315	100 – 1824
	N	32 – 2550	0 – 1399
RTD: (3 wires connection) PT100 (IEC) α = 0.00385 (Fixed decimal)		32 – 1471	0 – 800
		32 – 571	0 – 300
		-149.7 – 211.9	-100.9 – 100.0
		32 – 213.6	0.0 – 100.9
		-328 – 402	-200 – 206
		-149.7 – 999.1	-100.9 – 537.3
DC linear:		10 – 50 mV	0 – 50 mV
		4 – 20 mA	0 – 20 mA
		1 – 5 V	0 – 5 V
		2 – 10 V	0 – 10 V

Operating Conditions

	Reference Conditions	Operative Limits	Transportation and Storage
Ambient Temperature	20 °C ± 2 °C (68 °F ± 4 °F)	0 °C to 55 °C (32 °F to 131 °F)	-20 °C to 80 °C (-4 °F to 176 °F)
Relative Humidity	60-70 %	20-95 % non -condensing	
Voltage	90-264 Vac ± 1 %	90-264 Vac	
Frequency	50 Hz	50-60 Hz	
Source Resistance	< 10 ohms for thermocouple	1000 ohms maximum for thermocouple	
Lead resistance for RTD	< 0.1 ohm/lead (PT100)	50 ohms per lead maximum balanced	

Model Selection Guide

KEY NUMBER	Description	Selection	Availability					
1/16 DIN Controller: 48x48mm **Input Type** (Field Selectable)	RTD or Linear mV	DC1001	↓					
	Thermocouple	DC1002		↓				
	Linear mA	DC1003			↓			
	TPSC Controller *	DC100T				↓		
	Remote Setpoint, Fuzzy Logic, Digital Input *	DC100L					↓	
1/8 DIN Controller: 48x96mm **Input Type** (Field Selectable)	RTD or Linear mV	DC1501	↓					
	Thermocouple	DC1502		↓				
	Linear mA	DC1503			↓			
	TPSC Controller *	DC150T				↓		
	Remote Setpoint, Fuzzy Logic, Digital Input *	DC150R						↓

* factory set for thermocouple input

TABLE I **Output 1** (Control 1)	Relay	1	•	•	•	•	•	•
	SSR Driver	2	•	•	•			•
	Linear (factory set for 4-20mA)	7	•	•	•			•
TABLE II **Output 2** (Control 2 or Alarm 2)	None	0	•	•	•		•	•
	Relay	1	•	•	•	•	•	•
	SSR Driver	2	•	•	•			•
(Control 2 only)	Linear (factory set for 4-20mA)	7	•	•	•			•
TABLE III **Output 3** (Alarm 1 only)	None	0	•	•	•	•	•	•
	Relay	1	•	•	•	•	•	•
	SSR Driver	2	•	•	•	•		•
(Retransmission only)	Linear (factory set for 4-20mA)	7	•	•	•	•	•	•
TABLE IV Option 1	No Selection	0	•	•	•	•	•	•
	RS485 ASCII Serial Communication	1	•	•	•	•	•	•
	Digital Input (SP1/SP2 Selection)	2	•	•	•	•	•	
	RS485 MODBUS Communication	3	•	•	•			
TABLE V Option 2	Power Supply 90 to 264 Vac	1	•	•	•	•		•
	Power Supply 24 to 48 Vac/dc	2	•	•	•	•		•
TABLE VII : Manual	English Manual	0	•	•	•	•		•
TABLE VII : Packaging	No Selection	0	•	•	•	•		•
TABLE VIII : None		0	•	•	•	•		•

EXTERNAL DIMENSIONS, PANEL CUTOUT

UDC 1000

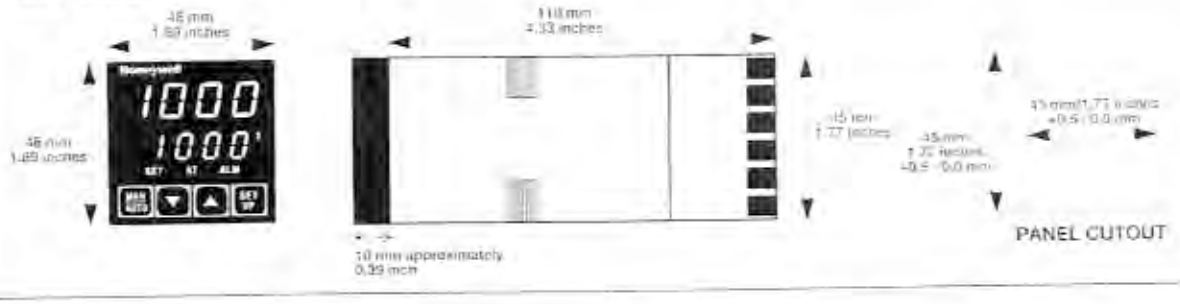

UDC 1500

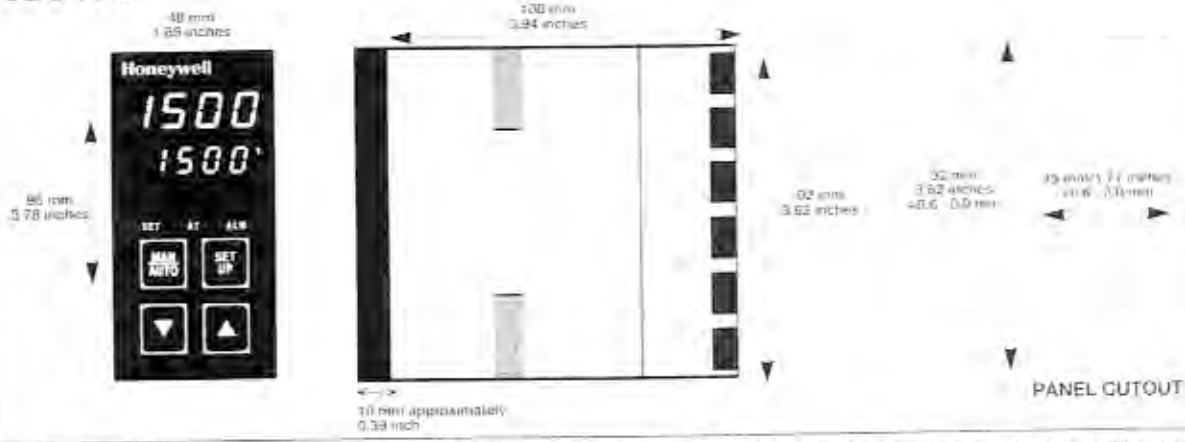

For more information, contact Honeywell sales at (800) 343-0228. *Specifications are subject to change without notice.*

Distributor:

Warranty/Remedy

Honeywell warrants goods of its manufacture as being free of defective materials and faulty workmanship. Contact your local sales office for warranty information. If warranted goods are returned to Honeywell during the period of coverage, Honeywell will repair or replace without charge those items it finds defective. The foregoing is Buyer's sole remedy and is **in lieu of all other warranties, expressed or implied, including those of merchantability and fitness for a particular purpose**. Specifications may change without notice. The information we supply is believed to be accurate and reliable as of this printing. However, we assume no responsibility for its use.

While we provide application assistance personally, through our literature and the Honeywell web site, it is up to the customer to determine the suitability of the product in the application.

Honeywell

Sensing and Control
Honeywell Inc.
11 West Spring Street
Freeport, IL 61032

EN0I-6041 0401 Printed in USA

HONEYWELL TEMPERATURE CONTROLLER

Honeywell

Operating Manual

eZtrend

Easy does it !

*(**easy** adj. **UNTROUBLED:** secure, prosperous, calm, peaceful, tranquil, contented, unhurried, relaxing; **MANAGEABLE:** simple, smooth)

43-TV-25-05 GLO Issue 4 06/04 UK

Table of Contents

Table of Contents iii

Safety 1
Symbols 1
Static Electricity 1
Installation Category 1
Fuses 1
Cables 2
WARNINGS AND SAFETY PRECAUTIONS 2
Do's and Don'ts 2
Hazardous Voltage 3
Maintenance and Unit Repair 3

Chapter 1: ***Introduction*** 5
eZtrend V5 5
Description 5
Storage Media 5
Specifications 6
Analogue Input card 7
Analogue Input card, performance 7
Analogue card performance, RTDs 8
Main Features 9
Default Start-up Condition Table 10
Real-time Visuals 10
Status Bar 10
Bar 11
Digital 11
Alarm Indicators 12
Pen Pointers 12
Trend 13
Units and Scale 13
Scale 13

Chapter 2: ***Installation*** **15**

Unpacking **15**
Battery **15**
Battery Function **15**
Mechanical **16**
Panel Mounting **17**
Electrical **18**
Cables **18**
A.C. Power **18**
24Vdc Plug Connection Instructions **19**
Case **19**
Analogue Card **20**
Current Inputs **20**
Thermocouple **20**
Alarm Card (option) **21**
Ethernet Interface **22**

Chapter 3: ***Quick Tour*** **23**

The Keypad **23**
Buttons **23**
Directional Key **23**
The Screen **23**
Status Bar **24**
Screen Layouts **24**
Screen Displays **25**
Replay Mode **26**
Messages **27**
Events List **27**
Power Up **28**
Menu Selection **29**
Text Entry **29**
About **30**

Chapter 4: ***General Setup*** **31**

Setup **31**
Edit **31**
General **32**
Language **32**
Name **32**
Description **33**
ID Number **33**
Default Drive **33**
Set Time **33**
Screen **34**
Option Codes **34**

Password **34**
Eng Password Entry **35**
Change Password **37**
Password User Traceability **37**
Load Passwords **37**
Save Passwords **37**
Reset Passwords **37**
Comms for Ethernet **38**
Factory **40**
Comms Ports **41**
Vutronik Adapter Installation **42**

Chapter 5: ***Analogue In Setup*** **43**

Analogue In **43**
Input **43**
Enabled **43**
Name **44**
Units **44**
Type **44**
Range **44**
Input Zero **45**
Input Span **45**
Conditioning **46**
Square Root Extraction **47**
Engineering Zero and Engineering Span **48**
Thermocouple **49**
Type **49**
Resistance Thermometers **50**
Temperature Calibration **50**
Tie To **51**
Sampling **52**

Chapter 6: ***Pen Setup*** **53**

Pens **53**
Pen **53**
Enabled **53**
Tag **53**
Description **54**
Maths **54**
Scale **54**
Alarms **57**
Totaliser **60**
Displaying Totals **64**
Logging **64**

Chapter 7: ***Relay Alarm Cards*** **67**

Relay/Digital **67**
N.B. Fail Safe and Maths **68**

Chapter 8: ***Setup Complete*** **69**

Setup complete **69**
Load **70**
Save **70**

Chapter 9: ***Recording*** **71**

Recording **71**
Enabled **71**
Log to Disk **71**
Save Data and Eject Disk **71**
Validate Disk **72**

Chapter 10: ***Totals*** **73**

Start All Totals **73**
Stop All Totals **73**
Reset All Totals **73**

Chapter 11: ***Change Password*** **75**

Changing an Existing User Password **75**

Chapter 12: ***Layout*** **77**

Layout Configuration **77**
Selecting and Re-naming Screens **77**
Pen Scale displayed on screen **78**
Data display evaluation **78**
Chart speeds **78**

Chapter 13: ***Software*** **79**

Software License/Warranty **79**
Features **79**
System Requirements **81**

Chapter 14: ***Instrument Care*** **83**

Battery Replacement **83**
Battery Life **83**
Battery Fitting **84**
Cleaning Instructions **85**
Disk Drive **85**
Disk Drive Cleaning **85**
Cleaning Procedure **86**
Backlights **86**
Operating Temperature **86**
Front Panel **86**
Calibration **86**

Appendix A - Quality Approvals 87
CE Mark 87

Appendix B - Battery Safety Data Sheet 89
Safety Guideline 89
Identification 89
Composition/Information on Ingredients 89
Hazard Identification 90
First Aid Measures 90
Fire - fighting measures 90
Accidental release measures 91
Handling and Storage 91
Stability and Reactivity 91
Ecological information 91
Disposal Considerations 91
Replaceable Battery Data 91
Hazard Identification and Disposal considerations 92

Appendix C -Thermocouple Connections 93
Internal Reference 93
External Reference @ 0°C 94
External Reference @ Specified Temperature 94
External Input Reference 95

Appendix D- Maths Expressions 97
Maths and Fail Safe 99

Appendix E - Ethernet & E-mail 101
Ethernet 101
E-mail 101
General operation of the e-mail system 101

Appendix F- Fuzzy Logging 103
What is Fuzzy Logging? 103
OK. How does it work? 104

Appendix G - F sub 0 Sterilisation 107
The significance of F0 107

Appendix H - Calibrate CJC 109
Calibrate CJC - RT Sensor 109
Calibrate CJC - Setup 109
Display CJC value 110
Messages Screen 111
Perform CJC Calibration 111
Calibration offset 112
Clear Calibration settings 112
CJC Adjustment Value 113
Remove CJC Calibration 113
Reset Factory 113

Index 115

Safety

The product range of instruments is compliant with the requirements of BS EN 61010-1:1993 “Safety Requirements for Electrical Equipment for Measurement, Control and Laboratory Use”. If the equipment is used in a manner NOT specified, the protection provided by the equipment may be impaired.

Symbols

One or more of the following symbols may appear on the recorder labelling:

Symbol	Meaning
	WARNING - refer to manual for instructions
	CAUTION - refer to manual for instructions
	Direct Current
	Protective conductor terminal
	Earth terminal

Static Electricity

All circuit boards and electronic modules associated with this recorder contain components which are susceptible to damage caused by electrostatic discharge. Should it be necessary to handle such components, appropriate precautions in accordance with BS CECC 00015 “Basic specification: protection of electrostatic sensitive devices” should be observed.

Installation Category

- Installation category - Installation category II, Pollution degree 2

For voltage, frequency and power see *“Specifications” on page 6.*

Fuses

There is one fuse situated on the power supply that can not be replaced by the operator.

Cables

To fully comply with the requirements of the CE Mark, all cables connected to the rear of the unit should use screened cable terminated at both ends. Also a low impedance earth cable (<1 mΩ) should be connected to the earthing stud on the rear of the recorder.

WARNINGS AND SAFETY PRECAUTIONS

Do's and Don'ts

1. Before any other connections are made to the recorder, the protective earth terminal should be connected to a protective conductor.

2.

> **⚠ WARNING**
>
> **IMPROPER INTERRUPTION OF CONNECTIONS**
>
> Any interruption of the protective conductor outside the recorder, or disconnection of the protective earth terminal is likely to make the recorder dangerous under some fault conditions. Intentional interruption of the protective conductor is dangerous.
>
> **Failure to comply with these instructions will result in death or serious injury.**

In order to comply with the requirements of safety standard EN61010, the recorder should have one of the following as a disconnecting device, located within easy reach of the operator, and be clearly labelled as the disconnecting safety device:

- A switch or circuit breaker which complies with the requirements of IEC947-1 and IEC947-3.
- A separable coupler which can be disconnected without the use of a tool.
- A separable plug, without a locking device, to mate with a socket outlet in the building.

3. Whenever it is likely that protection has been impaired, the recorder should be made inoperative and secured against operation. The manufacturer's service centre should be contacted.

4. Any adjustment, maintenance, and repair of the opened recorder in a powered condition is hazardous and should never be attempted.

5. Where conductive pollution such as condensation or conductive dust is present, adequate air conditioning, filtering and/or sealing must be installed.

6. This recorder contains a battery which must be treated and disposed of with care. Batteries must not be short circuited. Batteries should be disposed of in accordance with local regulations, they must not be disposed of with normal refuse. *See "Appendix B - Battery Safety Data Sheet" on page 89*

7.

WARNING

IMPROPER SIGNAL AND SUPPLY WIRING

- Signal and supply wiring should be kept separate.
- Where this is impractical, shielded cables should be used for the signal wiring.
- Where signal wiring is carrying, or could carry under fault conditions, hazardous voltage (defined as >30 V rms and 42.4 V peak, or >60 Vd.c.), double insulation must be used for all signal wiring.

Failure to comply with these instructions could result in death or serious injury.

8. If the equipment is used in a manner not specified by the manufacturer, the protection provided by the equipment may be inadequate.

9. In the case of portable equipment, the protective earth terminal must remain connected (even if the recorder is isolated from the mains supply) if any of the measuring, communications, or relay terminals are connected to hazardous voltages.

10. For transportation considerations, see *"Instrument Care" on page 83*

Hazardous Voltage

Hazardous Voltages are defined by EN61010-1 as follows:

WARNING

HAZARDOUS VOLTAGE LEVELS

- Voltage levels above 30V rms and 42.4V peak or 60V dc are deemed to be **"Hazardous Live"**.
- Refer to *See "Appendix B - Battery Safety Data Sheet" on page 89* for further information.

Failure to comply with these instructions could result in death or serious injury.

Maintenance and Unit Repair

See "Instrument Care" on page 83

CAUTION

CONTROL UNIT DAMAGE

In the event of a malfunction with the recorder contact your nearest Service Department (or authorised agent) to arrange for the return of the unit for repair.

Failure to comply with these instructions may result in property damage

Chapter 1: Introduction

eZtrend V5

The ***eZtrend V5*** paperless chart recorder, is the latest development of the solid-state replacement for traditional paper chart recorders.

The ***eZtrend V5*** focuses on

- Ease of use
- Low cost
- Reliability
- Strong visual design

Several options are available to meet a wide range of requirements within the pharmaceutical, water, process, gas and petrochemical industries, as well as power and environmental monitoring.

The ***eZtrend V5*** uses a 5” passive colour STN QVGA display, with brightness and contrast adjustments. The displays shows combinations of horizontal and vertical chart trends, real time bars and digital panel readouts - each input channel can also have a number of alarms assigned to them, as an option.

The ***eZtrend V5*** is available with up to 6 channels of Analogue inputs and with up to 32 alarms in any combination of any pen. Full Ethernet communications for direct connection of the recorder to a LAN or the Internet is available as standard.

eZtrend V5 can be fully programmed and re-configured locally via the integral keypad, or remotely from a PC. The configuration may be transferred from the PC to the recorder on a 3.5" 1.44 Mbyte floppy disk and stored in the internal flash memory.

Description

Model	Details
eZtrend V5	2, 4 or 6 channel recorder with 5” diagonal colour STN QVGA.

Storage Media

Media	Capacity
3.5” Floppy Disk	1.4 Mbytes
Internal Flash Memory	2 Mbytes

Specifications

Panel depth measurements do not include the thickness of the panel.

	eZtrend V5
Display Technology	5" passive colour STN QVGA Resolution 320 x 240 pixels
Dimensions (mm): **Bezel Size (w x h)** **Panel Depth** **Panel cut out**	 144 x 144 mm 200 mm (minimum) 138 x 138 mm
Number of Channels	2, 4, or 6
Power Supply	90 - 240 Va.c. (50/60 Hz) 24 Vd.c. (option)
Storage **Data Internal**	4 Mbytes Internal Memory 1.44 MByte standard floppy
Power Consumption (max)	20 VA (ac), 20 W (dc) Max.
Alarm card options	4 x relay outputs or 6 x relay outputs and 2 x volt free inputs (non inductive, internally suppressed)
Communications	Ethernet as standard.
DC Isolation	≤300 V d.c. (channel to channel, channel to earth)
Relative Humidity	10% to 90% RH
Storage Temp	-10 to 60 °C
Operating Temp	0 to 40 °C
Number of Inputs	2, 4 or 6 Analogue Inputs
Input Types	EMF (mV, V, mA), Thermocouple, RTD
Input Sampling Rate	100 mSec for all inputs
Input Sampling Method	Sample, Average, Min-Max
Logging Method	Sample, Average, Min-Max
Logging Type	Continuous, Events, Fuzzy
Logging Rates	100 mSec to 4 days per log
Clock	Calendar function - adjustable for daylight saving via Ethernet
Event Markers	44 character messages activated by cause and events
Alarm Set Pointers	Up to 32 integral ‘soft’ alarm points set for out of limit conditions
Languages	English UK & US, Spanish, German, French, Italian, Portuguese (Braz), Polish, Hungarian, Slovakia, Czech, Turkish, Romanian

Analogue Input card

Analogue Inputs	Details
Analogue input options	±70 mV, ±100 mV, ±200 mV, ±1 V, ±10 V, ±10 mA, ±20 mA Resistance thermometer, Thermocouple
Resolution of analogues	16 bit 0.0015%
Accuracy of analogues	
Voltage	±70 mV, ±100 mV (±0.04) ±200 mV (±0.04) ±1 V, ±10 V (±0.04)
Current	±10 mA, ±20 mA For current inputs, accuracy will depend on the resistor used, see *"Current Inputs" on page 20*
Source Resistance	-T/C mV 0.5°C/100 Ω (1000 Ω max) approx. -RTD 0.1°C/Ω (40 Ω max) approx.

Analogue Input card, performance

Linear and Thermocouple

Input Actuation (Linear)	Range	Accuracy	Temp. Stability
Millivolts dc Volts dc	-100 to 100 -2200 to 200 -1.0 to 1.0 -10 to 10	0.04% 0.04% 0.04% 0.04%	0.04%/°C 0.04%/°C 0.04%/°C 0.04%/°C

Input Actuation (Thermocouples)	Range		Accuracy			Temp. Stability ± Degrees Error per 1 degree
	°F	°C	±°F	±°C	±%Span	
B	**212 to 3305** 212 to 1112 1182 to 3305	**100 to 1820** 100 to 600 600 to 1820	18 7.2	10 4	0.7% 0.3%	0.15%/°C 0.13%/°C
C(W5)	**32 to 4172**	**0-2300**	9	5.5	0.3%	0.06%/°C
E	**-328 to 1832**	**-200 to 1000**	3.6	2	0.3%	0.06%/°C
J	**-328 to 2174** -328 to 32 32 to 2174	**-200 to 1190** -200 to 0 0 to 1190	5.4 2.7	3 1.5	0.25% 0.15%	0.03%/°C 0.03%/°C
K	**-328 to 2462** -328 to 32 32 to 1832 1832 to 2462	**-200 to 1350** -200 to 0 0 to 1000 1000 to 1350	5.4 3.6 4.5	3 2 2.5	0.2% 0.15% 0.15%	0.03%/°C 0.03%/°C 0.03%/°C

Input Actuation (Linear)	Range		Accuracy			Temp. Stability
L	**-328 to 1652** -328 to 212 212 to 1652	**-200 to 900** -200 to 100 100 to 900	5 2.7	2.75 1.5	0.3% 0.3%	0.03%/°C 0.03%/°C
N (Nicrosil Nisil)	**-328 to 2372** -328 to 32 32 to 2372	**-200 to 1300** -200 to 0 0 to 1300	5.4 5	3 2.75	0.2% 0.2%	0.05%/°C 0.04%/°C
R	**-58 to 3182** -58 to 572 572 to 3182	**-50 to 1750** 0 to 300 300 to 1750	7.2 5.4	4 3	0.3% 0.2%	0.01%/°C 0.01%/°C
S	**-58 to 3182** -58 to 572 572 to 3182	**-50 to 1750** 0 to 300 300 to 1750	7.2 5.4	4 3	0.3% 0.2%	0.01%/°C 0.01%/°C
T	**-328 to 752** -328 to 32 32 to 752	**-200 to 400** -200 to 0 0 to 400	3.6 1.8	2 1	0.35% 0.2%	0.08%/°C 0.08%/°C
G(W)	**1832 to 4172** 1832 to 3272 3272 to 4172	**1000 to 2300** 1000 to 1800 1800 to 2300	5.4 5.4	3 3	0.3% 0.3%	0.15%/°C 0.15%/°C
Nickel Cobalt	**-58 to 2372**	**-50 to 1300**	1.8	1	0.3%	0.05%/°C
Cromel/Copel	**-58 to 1112**	**-50 to 600**	1.8	1	0.3%	0.05%/°C

Analogue card performance, RTDs

Resistance Thermometer

Input Actuation (RTDs)	Range °F	Range °C	Accuracy ±°F	±°C	±%Span	Temp. Stability ± Degrees Error per 1 degree
PT100 100 ohms (To BS1904)	-328 to 1202	-200 to 650	2.7	1.5	0.2%	0.05%/°C
PT200 200 ohms	-328 to 356	-200 to 180	2.7	1.5	0.4%	0.05%/°C
CU53	32 to 300	0 to 150	N/A	N/A	N/A	N/A
Ni120	-112 to 464	-80 to 240	2.7	1.5	0.5%	0.05%/°C
Ni100	-76 to 356	-60 to 180	2.7	1.5	0.5%	0.05%/°C

Reference Temperature	20°C
Reference Humidity	65% RH 15%
Reference Junction Accuracy	±1.0°C
CJC Temperature Effect	±0.05°C/°C
Long Term Stability	0.2%/year

Main Features

Recorder Function	Rationale
Ethernet comms	Access recorder data via an ethernet connection
Password protection	Allows restricted access to recorder menus at specific levels
Independent log rate on each pen.	Each input has specific logging response.
Adjustable chart speeds.	Data view and collection optimised to the process variables.
Independent logging criteria on each pen - Sample, Average, Max/Min, Fuzzy.	Data collection optimised to the process variable.
Programmable display of multicolour traces, digital instantaneous values and bars with 250mSec display update.	Process window customized to application and user preference.
Different pen colours for analogue/waveforms.	maximise user visibility.
Visual indication of process maximums and minimums on bargraph displays.	Prompt indication of process excursions.
Indication of alarm set-points and process over/under range on the bargraphs.	Timely indication of critical process deviations.
Programmable chart divisions.	Simulated “paper” background easily changed.
Programmable pen names, engineering units and tag descriptions (up to 20 characters).	Effective recorder and input identification.
Pen programmable maths expression.	Process input manipulated at the recorder.
Event marking and recording system using external switch inputs or keypad.	Specific event can be identified and recorded.
Self diagnostics within the recorder.	Distinct identification of unit failures.
Data replay in trend mode	Review of long term trends and data analysis.
Language sensitive firmware	Firmware available in 12 languages
Replay of historical and Realtime data	Stored and Realtime data can be graphed in the software.
Realtime data transfer	Stored data can be analyzed in the software.
Comms Server	Manages the communication status of the recorder

Default Start-up Condition Table

Listed below are the recorder default settings for initial power up.

Menu	Function	Default
General Set up	Language	English (UK)
	Default Drive	Disk
	Password	Disabled
	Factory Drives	Disk 1.44 Mb floppy
Analogue In Set up	Inputs	Enabled
	Type	Volts
	Range	0-10V
	Sampling	500mS <2Hz>
	Pen	Enabled
Pens Set up	Scale	0-100% (Auto format/Auto Divs)
	Totaliser	Disabled
	Logging	Disabled
Recording Set up	Recording	Disabled
	Log to disk	Disabled
Layout	Screens 1 & 2	Enabled
	Screens 3 to 10	Disabled

Real-time Visuals

For a full display of the eight different screen layouts available on the ***eZtrend V5***, see *"Screen Layouts" on page 24.* To select a screen layout see *"Selecting and Re-naming Screens" on page 77*

Status Bar

The Status bar depicts the various process states active in the recorder

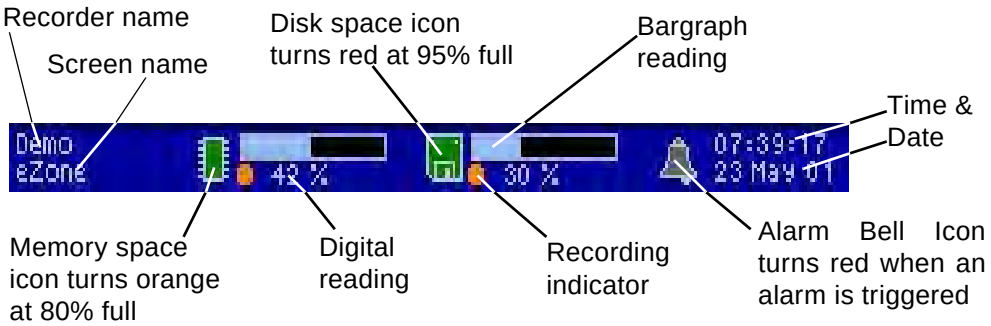

Bar

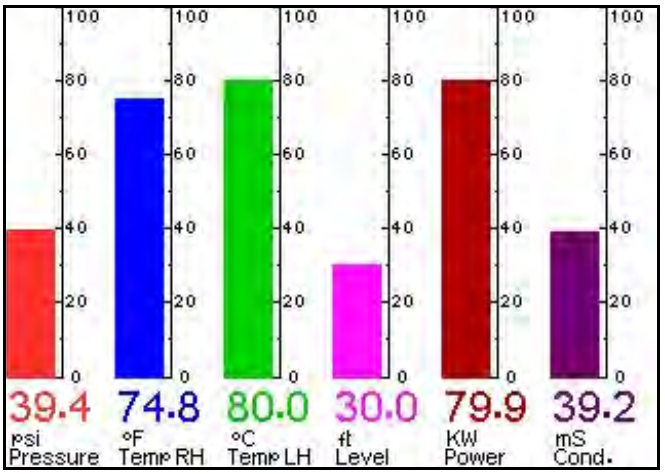

- Auto attach to trend.
- Over/under range indication.
- Horizontal or vertical.
- Major and Minor graduations.
- Variable screen position.

Digital

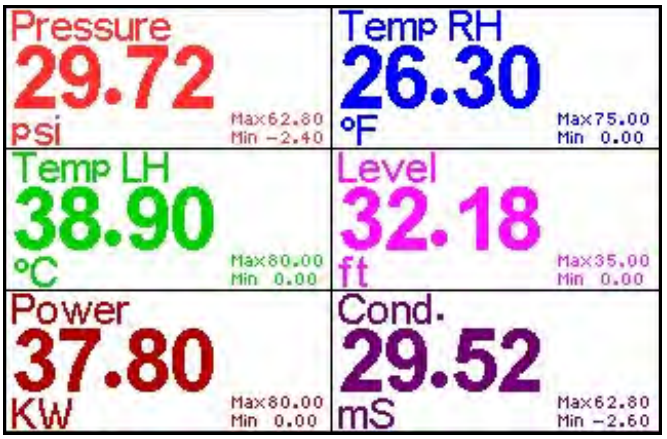

- Variable screen position.
- Max / Min. values.
- Over/under range indication.

Alarm Indicators

- High alarm icon is red

- Low alarm icon is red

Pen Pointers

- Provide pen pointers where bars are not required which move in real-time.
- Over/under range indication.

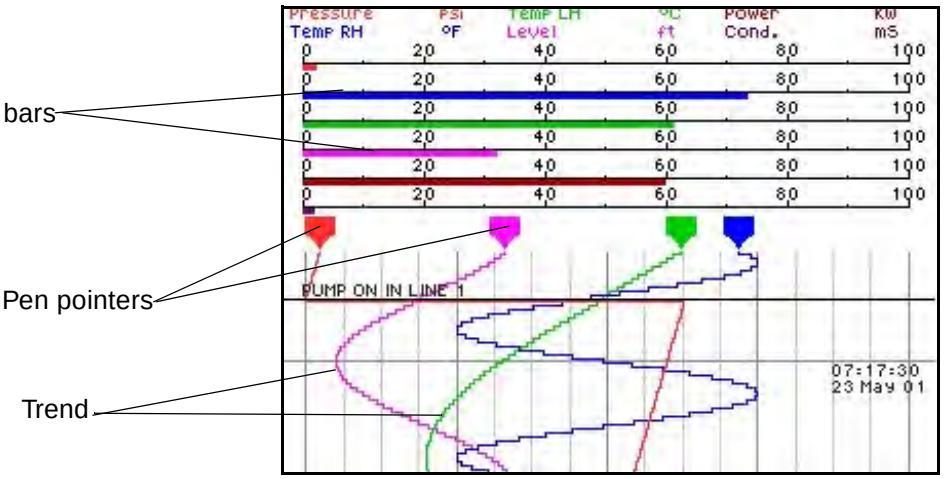

Trend

- Variable time per division.
- Text markers.
- Any combination of pens in tiled, conventional or waterfall mode.

Units and Scale

- Programmable text length up to 20 characters.

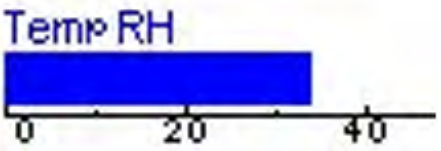

Scale

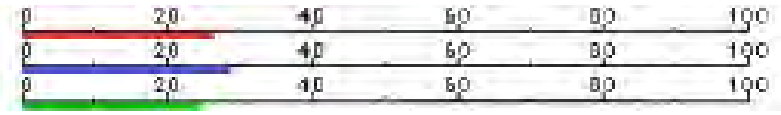

- Auto or definable scale.
- Horizontal or vertical.

Chapter 2: Installation

Unpacking

It is advisable to retain the packaging in which your ***eZtrend V5*** recorder arrived, should the recorder need to be returned.

NB. Should the original packing be destroyed, then **ONLY** pack the recorder in polystyrene granules if the recorder is **FIRST** sealed in a strong plastic bag, failing to do this will invalidate your warranty.

For transportation information see *"Instrument Care" on page 83.*

Battery

For battery life and replacement details, see *"Battery Replacement" on page 83*

Battery Function

The battery provides power to the memory which will "back-up" the setup, the realtime clock and any data not stored to disk. If the battery becomes exhausted the realtime clock, setups and any data will be lost in a power down situation.

NOTICE

BEWARE OF LOSS OF INFORMATION

- The realtime clock, setups, and any data will be lost if the battery is exhausted and the recorder is powered down.
- Any unsaved data will be lost, saved data will be preserved.

Mechanical

The ***eZtrend V5*** units are panel mounted as shown below. The recorder slides into the panel cut-out from the front and is held in place by two mounting clamps pressed against the rear of the panel by two screws.

NB: For panel cutout size *See "Specifications" on page 6.*

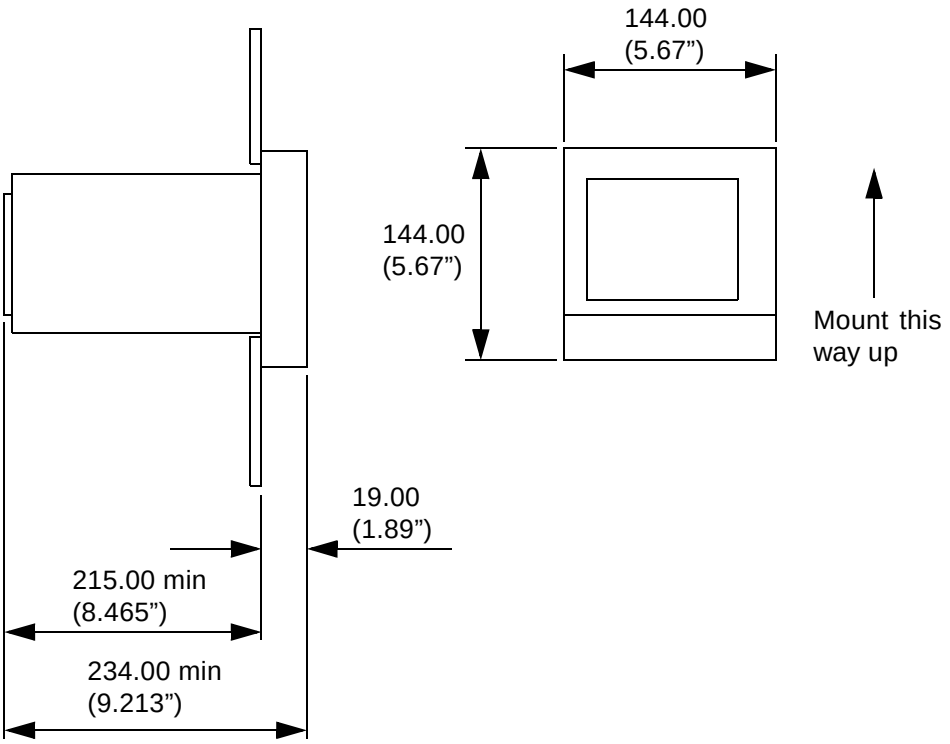

Panel Cut-out

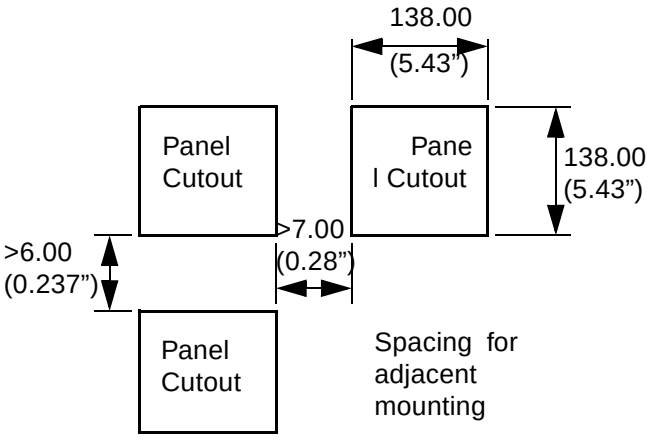

Panel Mounting

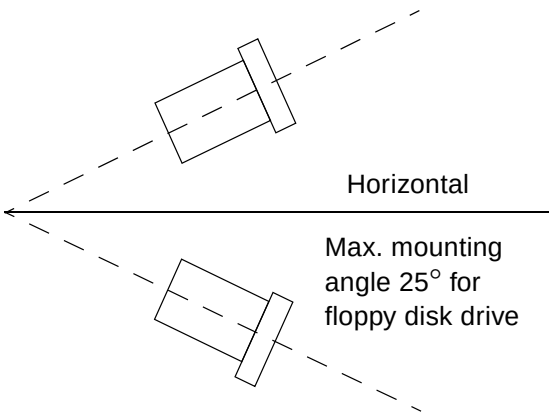

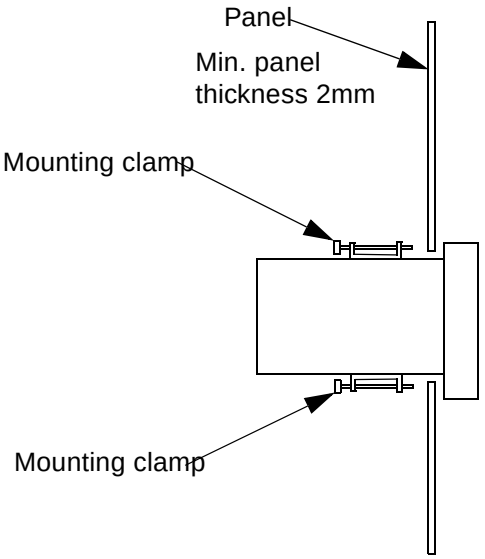

CAUTION

CONTROL UNIT DAMAGE

Do not over tighten mounting clamp screws. Torque setting 0.2 - 0.5 Nm/1.77 - 4.4 lbf-in.

Failure to comply with these instructions may result in product damage

Electrical

All connections to the unit are made via the rear panel.

Cables

To comply with CE Mark, all cables connected to the rear of the unit should use screened cable terminated at both ends. Non-US cable connections as shown on diagram.

A.C. Power

A.C. supply is connected via the standard configuration IEC chassis plug on the rear panel.

NB: For the panel cut-out sizes, *See "Specifications" on page 6.*

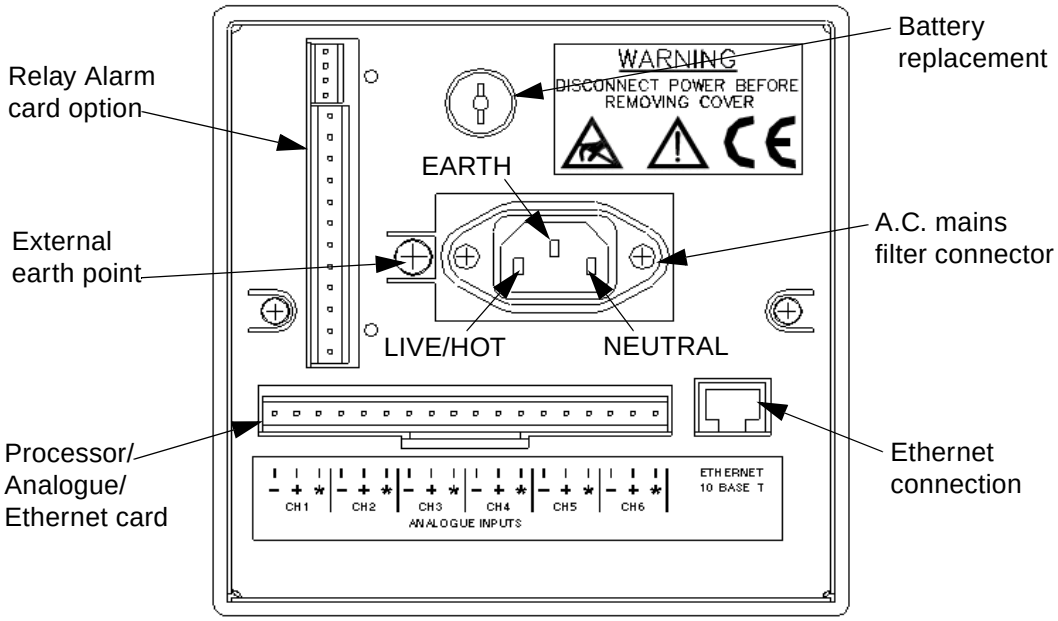

⚠ WARNING

ENSURE SAFETY EARTH CONNECTION

Always ensure the unit is connected to chassis ground/safety earth when connecting to a AC or DC supply.

Failure to comply with these instructions could result in death or serious injury.

NB: The ***eZtrend V5*** range is intended for panel-mount use and as such should be considered as permanently connected. Disconnection from the supply MUST be made possible by means of a switch, circuit breaker or other means of supply isolation. The disconnection device must be included in the panel installation, clearly marked, in close proximity to the equipment, and within easy reach of the operator. In the case of portable equipment, the protective earth terminal must remain connected (even if the recorder is isolated from the mains supply) if any of the analogue, communications, or relay terminals are connected to hazardous voltage.

24Vdc Plug Connection Instructions

24Vdc option 3 pole free socket connections (20W). Supply range rated 18-30Vdc.

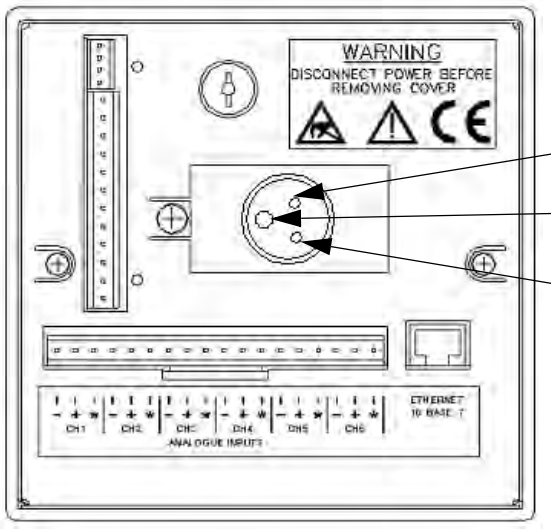

Figure 1 .

Case

This view shows the right hand side of the case, the rectangular holes to the right are for the mounting clamps. The three round holes in the centre consist of two trimpots and a battery switch. The left hole is a trimpot adjustment that controls the ***Brightness*** of the screen. The centre hole is a trimpot adjustment that controls the ***Contrast*** of the screen. The third hole, to the right, is the ***Battery Switch*** his will be in the ***Off*** position by default. The unit will arrive with the battery switch in the off position to save battery life, place the switch into the ***On*** position, switched towards the front of the unit, to activate.

Display Trimpot Adjustments

A - Brightness control

B - Contrast control

C - Battery switch

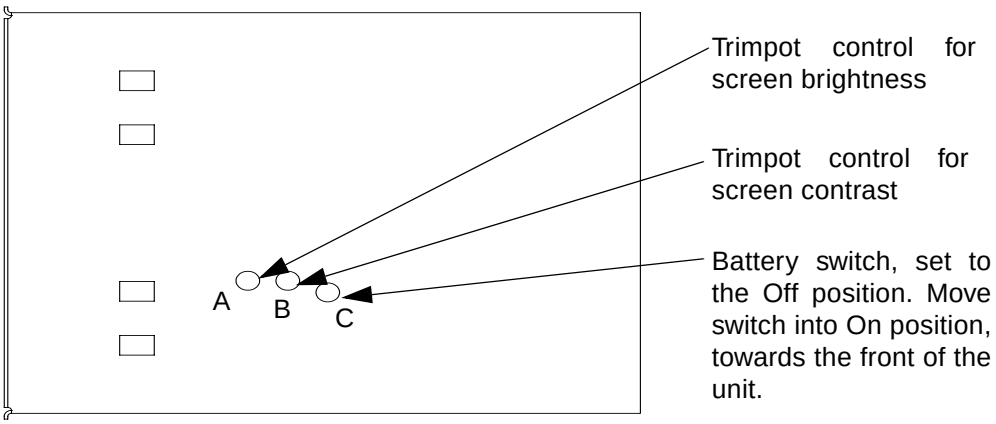

Analogue Card

The ***Analogue input card*** is used for connecting a range of input signals to a unit. These are connected as shown in the example below. For 18-way connector; torque setting 0.4Nm/3.5lbf-in. Do not over tighten.

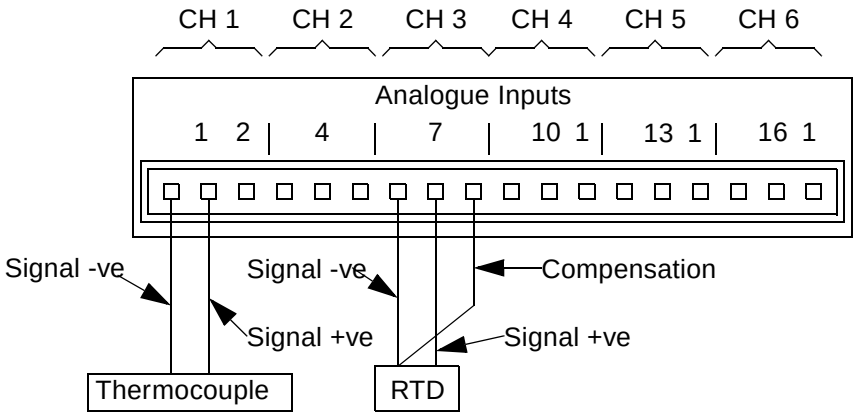

Current Inputs

For current inputs an external resistor is required to be fitted across pins 1 and 2, 1 per channel. The resistor value should be 10Ω and a high tolerance such as 0.1%.

The resistor should been connected as shown, on the mating half connector, across the relevant pins according to which channels are to be set up for current input.
See "Analogue In Setup" on page 43.

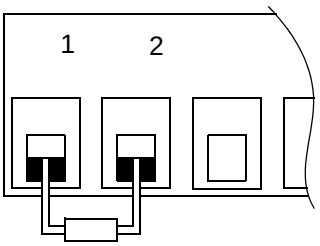

This resistor connection is an example for a current input on channel 1

Current input channel number	Pin numbers to connect
1	1&2
2	4&5
3	7&8
4	10&11
5	13&14
6	16&17

Thermocouple

The ***Thermocouple*** is connected for internal compensation - details on how to connect thermocouples using other forms of compensation are given in *"Appendix C -Thermocouple Connections" on page 93.*

Details on setting up thermocouple and resistance thermometer inputs *See "Thermocouple" on page 49. Or see "Calibrate Input" on page 40.*

Alarm Card (option)

For set up of Alarms, *See "Relay Alarm Cards" on page 67.*

There are two ***Relay/Alarm Card*** options available on the ***eZtrend V5***. There is a 4 x relay output card and a 6 x relay output with 2 volt free digital inputs. The relay outputs will be activated by

- Alarm or set points
- Disk full

The volt free contact inputs will be available to

- Activate alarms and set points
- Recording control
- Change log rates. (Pause logging)

The pin-outs for the relay alarm card are numbered from the bottom of the unit to top, pins 1 to 12, for the relay outputs, and pins 1 to 4 for the 2 digital input connector. Devices driven by the relays are connected to a 12-way screw terminal plug similar to the one used on the Analogue inputs. Available alarm outputs start from alarm channel 1 up to the maximum number of alarms allocated. For 12-way connector; torque setting 0.4 Nm/3.5 lbf-in. Do not over tighten

The Relay Card will be fitted with a link in the Normally Closed (NC) position on channels 1 to 6. The link can be moved manually to the Normally Open (NO) position if required.

The Alarm cards are mounted vertically in the unit and the rear connections for the alarm card are vertical. If the 6 relay output/2 input card is fitted the inputs are located in the 4 pin connector towards the top of the recorder.

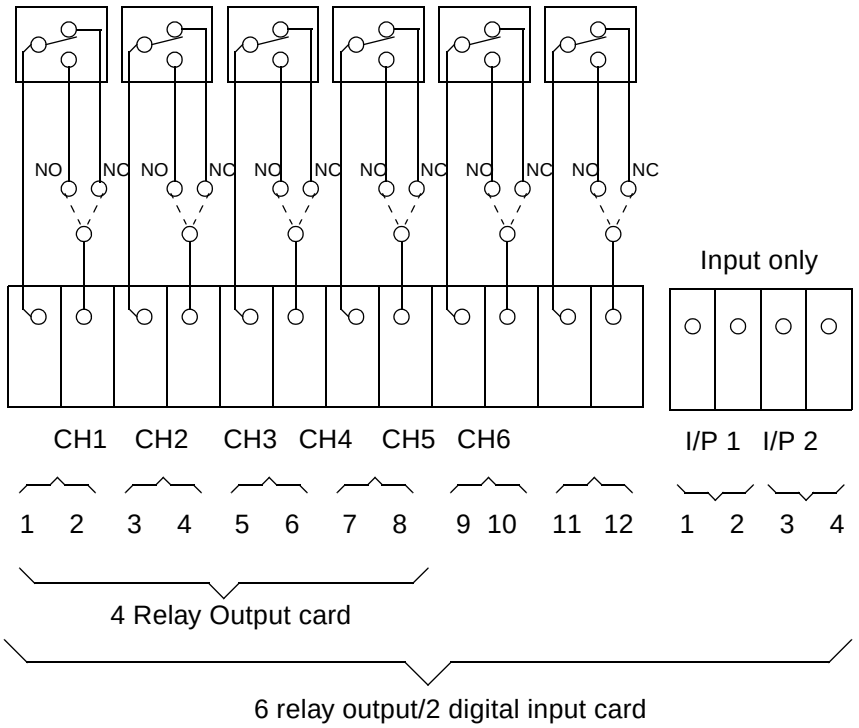

Ethernet Interface

The Ethernet connection is part of the main pcb. A separate socket is provided at the rear of the unit. This is an 8-way RJ45 socket Molex 95040-288“ used for standard Ethernet connections.

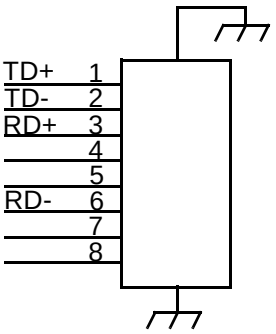

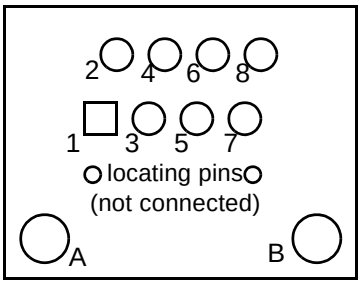

Chapter 3: Quick Tour

The Keypad

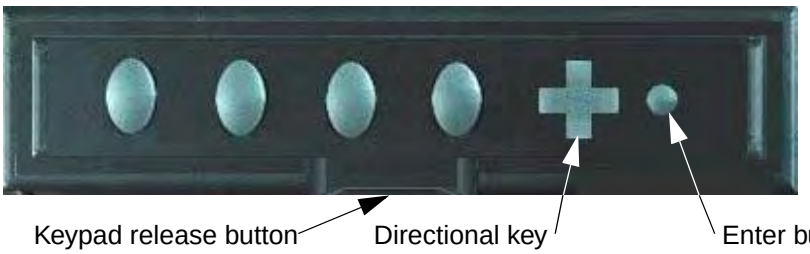

Buttons

To select an option as displayed along the bottom of the screen, press the button immediately below the required option. The options displayed above the buttons change dependent upon the facilities available at that given time.

Directional Key

The ***Directional Key*** has four orientations; Up, Down, Left or Right. Down and Left produce the same movement as each other in horizontal or vertical plane. The Right and Up buttons produce the same action in vertical or horizontal planes. This will be determined by which menu or screen is being displayed. The directional button has three functions

1. To navigate through a list of menu options
2. To select a specific option
3. Activating replay mode *(See "Replay Mode" on page 26.)*

To choose an option from a drop down menu, use the directional button to navigate until the option required is highlighted and then press the enter button to select.

The Screen

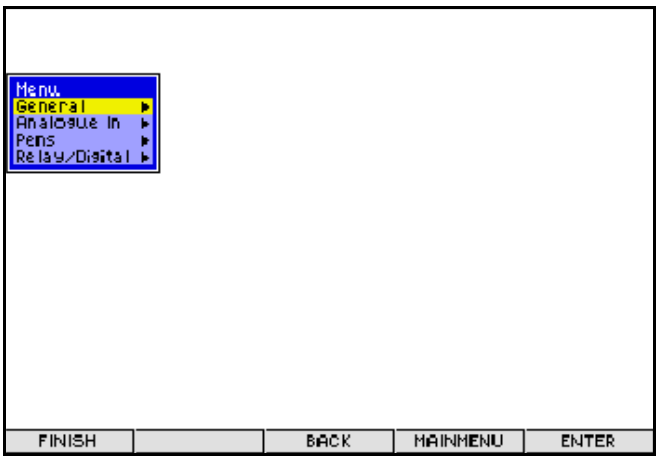

On the ***eZtrend V5*** the data is displayed on a 5" diagonal passive colour STN Quarter VGA Industrial LCD. The display requires a warm up time of 60 minutes before any brightness or contrast adjustments should be made. *See "Display Trimpot Adjustments" on page 19.*

Status Bar

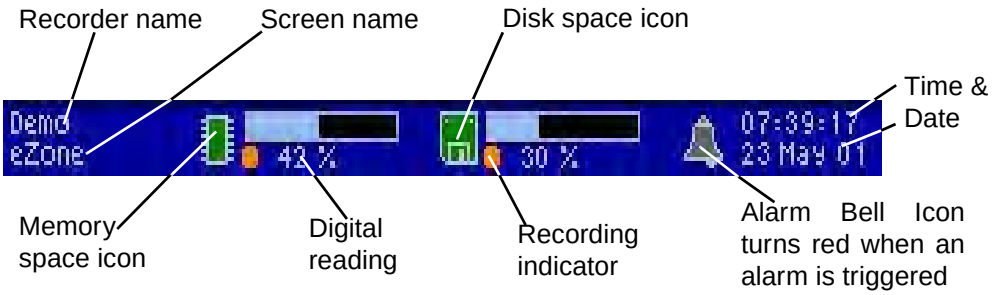

The icons for the ***Chip*** and ***Floppy Disk*** are green in normal operating conditions. The chip relates to the amount of memory space used and changes to orange when 80% full. The floppy disk icon represents the amount of space used on the floppy disk, which turns red when the disk is 95% full. The alarm bell icon which lights up red to indicate that an alarm has been triggered. Displayed on the left of the Status bar is the Recorder Name and the Screen number presently being displayed. On the far right, the Time and Date are displayed.

Screen Layouts

These are the display formats available for viewing data, 8 different layouts are available in varying combinations of trends, bars and digitals. All information specified in the set-up for a particular pen will be consistent in all screen displays. The screen can display 6 channels as chart trends, bars and or digitals. Selecting this item will cause all pens displayed on the screen in conventional mode to conform to the chart rate. If the directional key is operated whilst a chart is displayed a cursor arrow will appear. By depressing the directional key an on screen menu will appear and a chart rate can be selected. The yellow area of the chart indicates its in an alarm state.

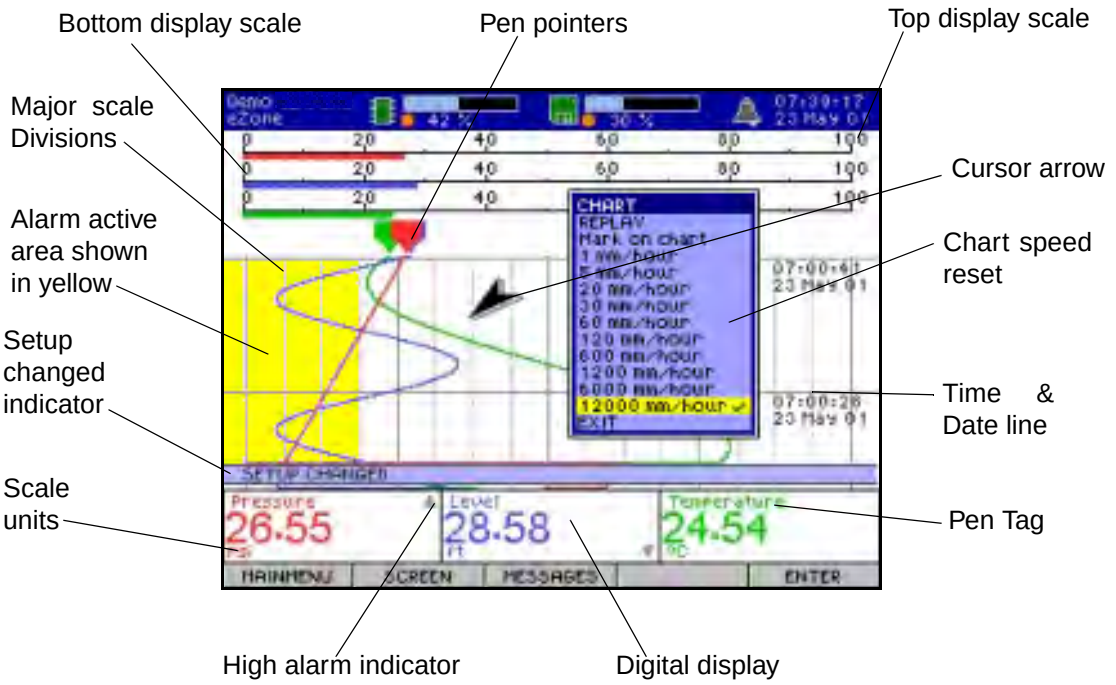

Screen Displays

There are eight different layouts available with the ***eZtrend V5*** . To select a screen, see *"Selecting and Re-naming Screens" on page 77*

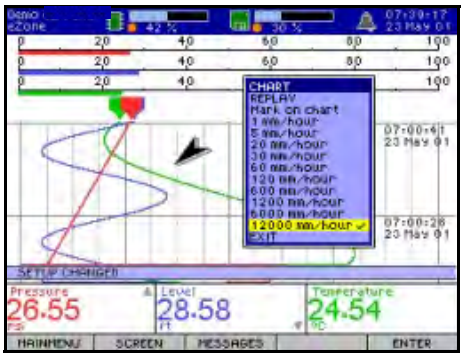

3 Vertical Trends with Bars + Digitals

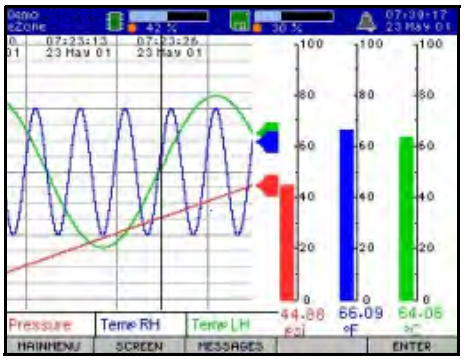

3 Horizontal Trends with Bars + Digitals

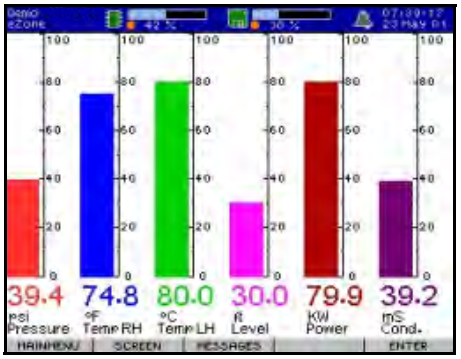

6 Vertical Bars

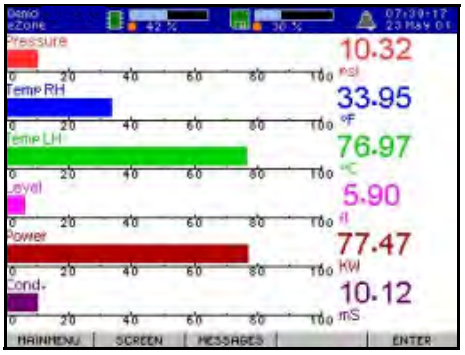

6 Horizontal Bars

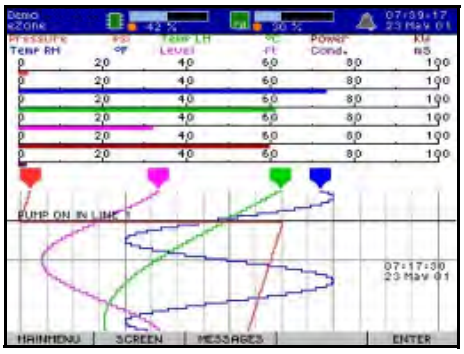

4 Vertical Trends

3 Horizontal Trends & Digitals

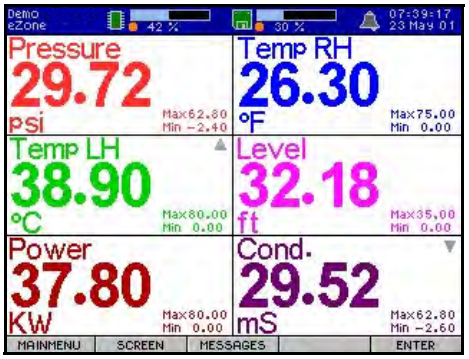

Digital Panel

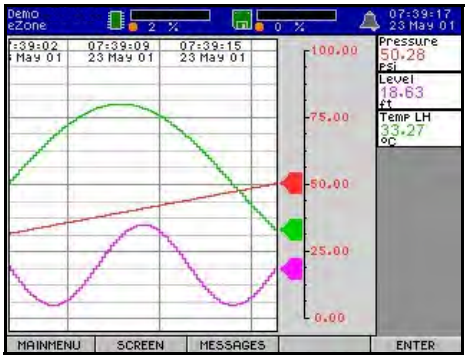

3 Vertical Trends & Digitals

The screen display is ***non volatile*** which means the recorder will show the last screen displayed after a power down. The ***eZtrend V5*** offers a selection of 8 display layouts. Combinations of trends, charts and digitals display are available in horizontal and vertical modes. *See "Layout" on page 77.*

Replay Mode

Replay mode is only available when a chart is displayed on its own or with digitals or bars. This is activated by pressing the directional key to produce the cursor arrow and then press the enter button key to generate the on screen menu. Select ***Replay***, the chart will change to a grey background and the menu bar at the bottom of the screen will change. The right hand button of the menu bar will read ***Normal***, this is the speed at which the chart will travel when navigating using the directional key. Press the enter button to change between a ***Fast*** or ***Normal*** rate of travel. Use the left side of the directional key to go back in time and the right side to come forward to the present time. The chart pen pointers, bars and digitals stay in real time.

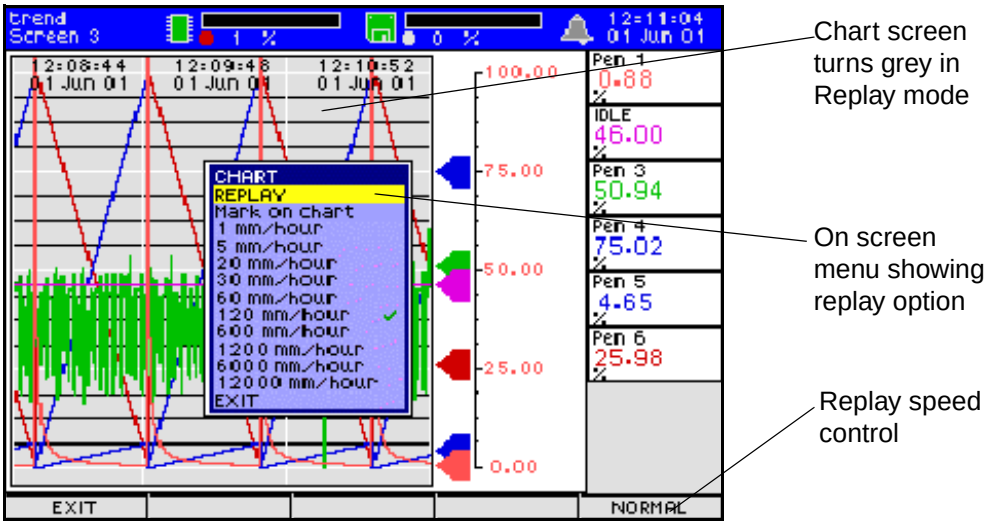

MaxMin: The minimum and maximum levels can be reset for bars and digitals. Use the directional key to navigate to the digitals or bars area of the screen and press to enter. The Bar Graph or Digitals menu will appear, select and press the directional key to reset using ***Reset MaxMin*** or by resetting all the channels using ***Reset All Max Mins.***

Mark on chart: This will place a line across the full width of the chart with text identification, at the precise time and date of entry. Up to 80 characters can be entered, the ***eZtrend V5*** can display the first 40 characters across the screen. The full text can be reviewed in the messages screen, shown as 2 lines of text.
Mark on chart can be used to indicate, for example, operator change over or for batch recognition. Mark on chart can also be used to notify when alarms are switched on or off, if an alarm card is fitted.
With a chart displayed, use the directional key to produce the cursor arrow in the chart area. Press the enter button to display the chart menu. Select ***Mark on chart*** and enter text required.
Preprogrammed markers can be composed in the ***TrendManager Pro V5 Suite*** and imported into the recorder as part of the setup. When mark on chart is selected a list of 20 preprogrammed markers will be displayed. Use the directional key to select a marker, these can be edited at any time. *See "Relay Alarm Cards" on page 67.* All activity is recorded in the messages screen. *See "Messages" on page 27.*

Messages

If a situation occurs where a warning message is indicated the MESSAGE button will flash amber. If an error occurs the MESSAGE button will turn red.

The messages screen records any setup activity that has been changed.

- Green - indicates normal status and user information.
- Red - indicates a warning message or a problem has occurred.
- Blue - indicates alarm on/digital on
- Magenta - indicates alarm off/digital off

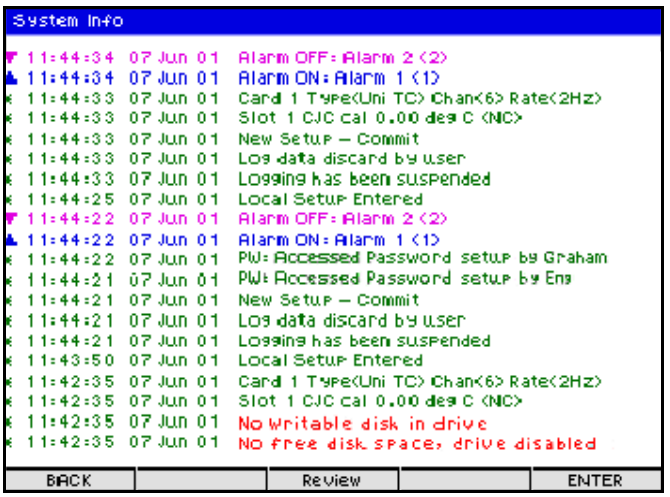

Press the ***Review*** button to reveal this menu bar

Press the ***Back*** button to return to the main screen. The ***Review*** button produces a different button bar at the bottom of the screen with the options of ***Exit*** which will return to the main messages screen and the ***Date On/Off*** facility which toggles on and off. ***Up***, ***Down*** are for scrolling by ***Page*** or use the directional key to scroll by ***Line*** or ***Page*** which is determined by pressing the Enter button. The ***Enter*** button will only become active when the directional key is used and a cursor arrow appears, then press ***Enter.*** This activates the ***Events list.***

Events List

The ***Events list*** is activated by entering the Messages screen, use the directional key to produce the cursor arrow. Then press the directional key to reveal the events list. From this list the ***Date*** option can be turned on or off and the ***Review*** menu bar can be activated. The ***Filter*** option allows specific event types only to be displayed such as indicating when an alarm has been triggered. ***Reset*** will clear all the messages that have been displayed up to that time and the ***Exit*** option will remove the events list menu.

Power Up

The first screen displayed is the ‘power up screen’ shown below. This only appears for a short time before changing to the last screen selected before the unit is switched off or, on first power up, it will default to the layout displaying horizontal chart trends with digits. To change screen layout press the ***Screen*** button and use the directional key to scroll up and down the selection menu. When the screen required is highlighted, press the enter button to select. Allow a warm up time for the display of 60 minutes before adjusting the brightness or contrast. *See “Display Trimpot Adjustments” on page 19.*

NB: The flag displayed in the top right corner of the screen indicates the initial default language.

Power up screen

Non-Volatile Screen Display

The ***eZtrend V5*** features a non-volatile screen display. This means the screen will display data continued from the last power down or reset. Below is an example demonstrating the non-volatile screen display. The first chart shows the data before the power is cut or the recorder is reset. The second chart shows what happens when the power is restored. No data has been lost, and the full chart history is retained, in the same format, during power interrupt. The recorder will always power up to the screen being displayed before any power interrupt.

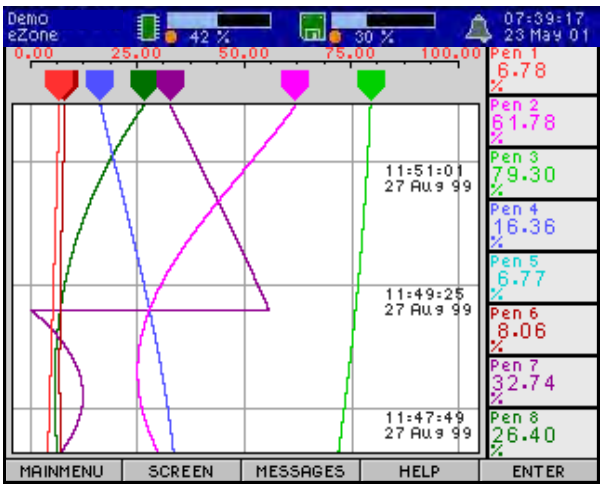

Before power down or reset

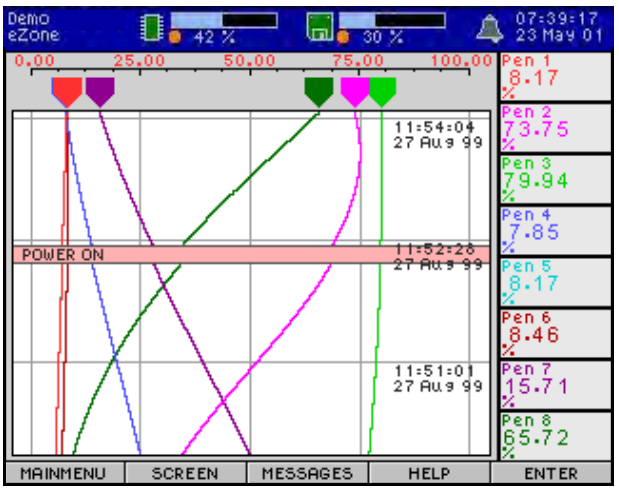

After power up or reset

Menu Selection

The four main buttons on the keypad apply to the on screen selection bar, press to activate. The ***Directional Key*** is operated in either Up and Down or Left and Right depending on the screen being displayed. Use the directional key to scroll through menus and highlight options. When an option is highlighted press the Enter button. The ***Enter*** button, is the small round button to the right of the keypad, press to activate. Pressing any of the buttons or the directional key will cause the display to change or another ***Menu*** to appear.

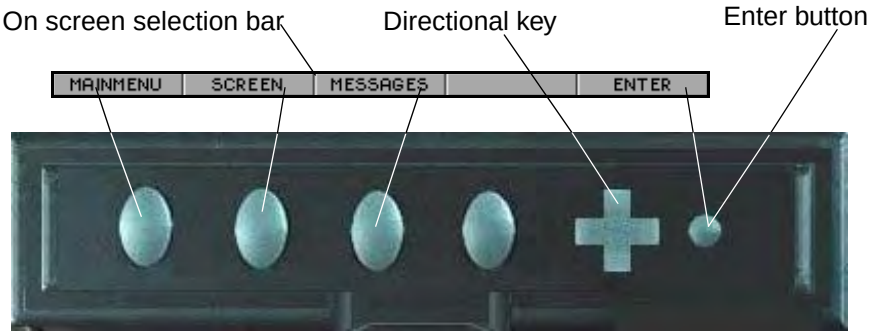

Text Entry

Text entry is required to configure many of the options in the set-up menu. The principle for all text entry follows a similar format. Using the directional key, highlight the required option on the menu and then press the enter button to select. This will activate a character block at the bottom of the screen. Press enter again to display the character selection box. Using the directional key, once again, highlight the specific row required, press the enter button to select the character. Continue until all characters are entered. To enter a space, move the cursor to a blank area within the character selection block and select. Finally press ***Accept*** then ***Finish*** and ***Apply*** on the on-screen selection bar when complete. Follow the on screen instructions for the ***Log Data History*** screen which appears when any changes are made to the ***Setup***.

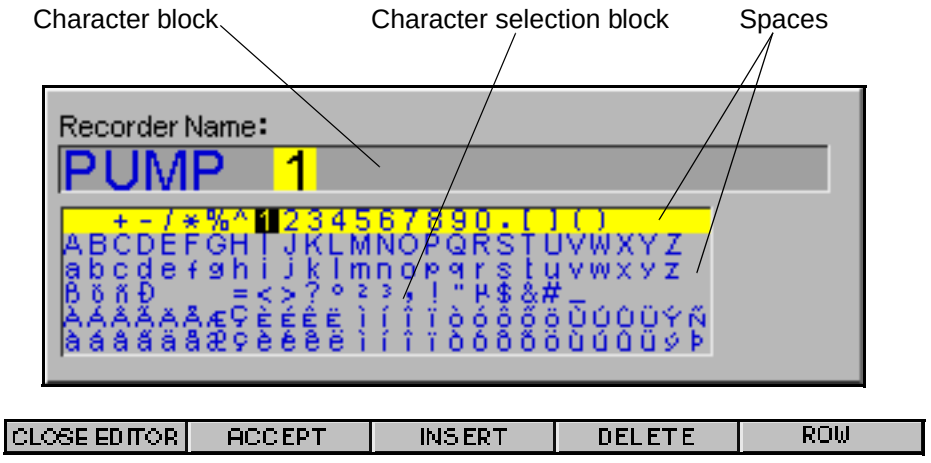

Notice the on screen selection bar has changed. These are active and enable you to ***Cancel*** and return to the menu, ***Accept*** the information entered, ***Insert*** characters into the text or numbers block, ***Delete*** any entry which may be incorrect and finally the directional key function which when depressed will ***Select*** the row or character highlighted.

About

Select the Main Menu button, use the directional key to select the ***About*** option then press the enter button. This will display the technical specifications relevant to your recorder which may include:

- Loader = Firmware version
- Serial number

Options available; such as

- Maths
- Totals
- Events
- Web Server
- E-mail

Communications facilities appertaining to your recorder; such as

- Ethernet
- Trendbus
- Extra Pens

To remove the display from the screen press the button immediately below ***OK***.

Chapter 4: General Setup

Setup

Use the on screen menu bar and the corresponding buttons below each item on the keypad, to select recorder options. Use the directional key to navigate through the recorder menus and highlight an option. Press the small round enter button to select an option.

To change the configuration of the recorder choose ***MainMenu*** from the on-screen selection bar displayed along the bottom of the screen by pressing the button immediately below. Use the directional key to highlight ***Setup*** then press the ***Enter*** button to select. The setup menu will appear showing three options. The ***Edit*** option is for configuring the setup of the recorder. The ***Load*** opt ion is for importing setups from ***TrendManager Pro V5 Suite*** or another recorder. *See "Software" on page 79.* To load a setup *See "Load" on page 70.* The ***Save*** option will save imported setup. *See "Save" on page 70.*

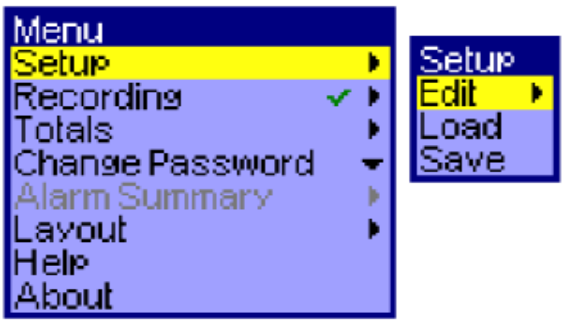

Edit

Select ***Edit*** for recorder configuration. The following ***General*** menu will appear showing the options available. These options are detailed on the pages indicated below. A small black arrow to the right indicates a further menu. Menu items shown in grey means this particular option is not available.

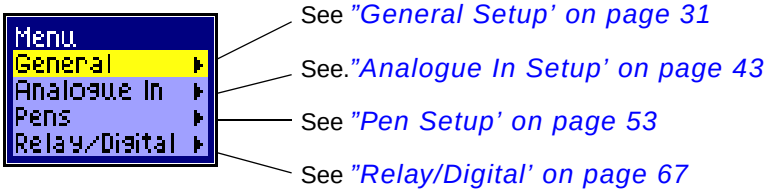

General

Language

This is the first option on the ***General*** menu, select ***Language*** to activate the menu. Choose the language required and the reset window will appear, press the three buttons shown simultaneously to reset the recorder. The recorder will now display text in the chosen language.

Name

Function: Recorder name

Type: 20 Character alpha/numeric

Description: User programmable identification

The second selection on the ***General*** menu is ***Name***, this is a user defined label. Highlight, using the directional key, and press the enter button to show the recorder name at the bottom of the screen, (the cursor will be on the first character) press enter again to display the character set available. To edit the text, navigate through the rows using the directional key and press enter when the row containing the letter required is highlighted. Use the directional key again to identify the specific character. Press enter to select the character. When the new name is complete, press the ***Accept*** button below the selection bar. *See "Setup Complete" on page 69.*

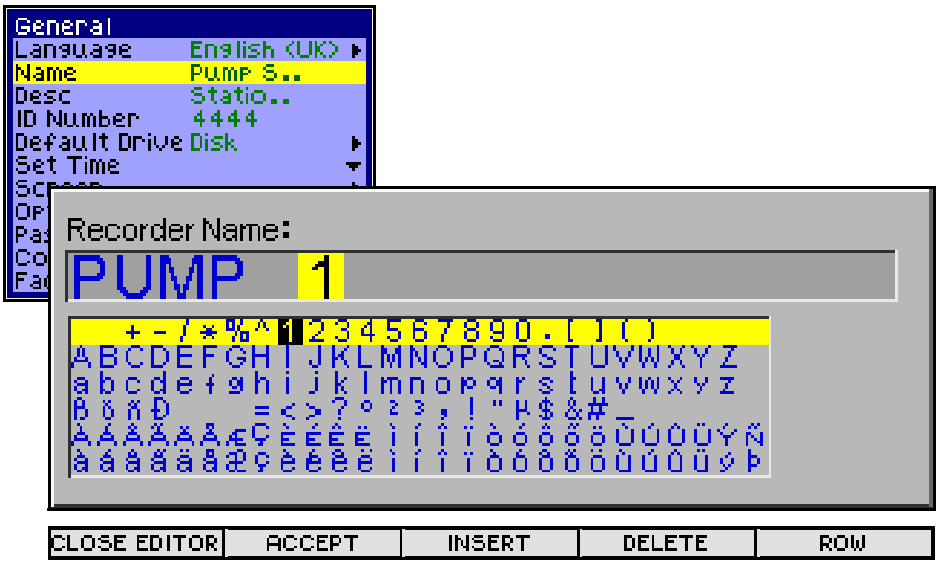

Description

Function: Recorder description

Type: 50 Character alpha/numeric

Description: User programmable identification

To display or change the description follow the instructions as for ***Name*** above.

ID Number

Function: Identification number of the recorder

Type: 4 Character numeric

Description: Address of recorder

Default: 0001

Essential that recorders on communication networks have different ID numbers. To display or change the ***ID Number*** follow the instructions as for ***Name***.

Default Drive

This menu shows the logged data is going to the Floppy Disk Drive by default.

Set Time

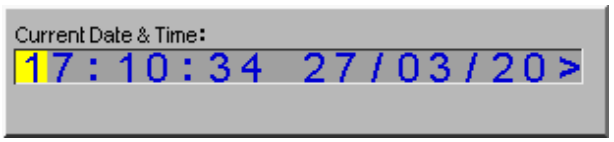

Function: Time and date display

Type: 6 Character numeric (time), 8 Character numeric (date)

Description: Time and date setup for the recorders real time clock.

Default: 00:00:00 01/01/2001

From the ***Set Time*** option on the ***General*** menu as shown in *"Setup' on page 31*, press the thumbwheel to show the current date and time as shown here. To change the ***Time*** and/or ***Date*** follow the instructions as for ***Name.*** The time is shown in hours, minutes, and seconds with a colon in between to separate each pair of digits. The date is shown by day, month and then year using a forward slash in between. Provide a space in-between to define the time and the date.

Screen

Function: Reduce wear on the screen, change the screen background appearance.

Type: Menu select, Time-out 1 to 255 minutes

Description: Blanks the screen when there has been no activity for a specified time period. black or white background option.

Default: Screen saver is disabled, chart defaults to a white background

The brightness and contrast of the screen can be controlled by a trimpot adjustment, see *"Display Trimpot Adjustments' on page 19*.

The ***Saver*** function helps to reduce screen wear, highlight and toggle this option On or Off using the Enter button. Set the screen saver ***Timeout*** from 1 to 255 minutes. Highlight and select to produce a text box and enter the time-out period required.

Chart paper - This feature gives the option of having a black or white chart background colour. Use the directional key to highlight and the enter button to select which chart background colour is preferred.

Option Codes

Function: Serial number Identification and option availability

Type: 2 part 15 Character alpha/numeric.

Description: 6 character serial number, factory programmed for unit identification. Plus a 9 character option code, fully upgradeable with option enhancements.

Default: Individual factory set code

This ***Option Code*** is a unique serial number specific to your recorder which contains information enabling certain options. It can ONLY be changed when and if you purchase further options for this recorder. The first six digits of the code depicts the serial number of the recorder. The other nine digits are the coded options available. The whole code is CRC checked, invalid entries will not be accepted.

Password

Function: Protects entry to the system at various levels

Type: Text entry

Description: Restricts access within the recorder, providing password protection at different levels.

Default: Disabled

Password protection restricts user entry to different levels within the recorder. Passwords will be disabled on start up and the recorder will default to a predetermined password, which is displayed. **'Eng', is the highest level of access to all screens**.

The default password is "PASS". From here the Engineer can allocate other users and their levels of access to screens within the recorder. Each user creates their own password when they initially log on. Each user, including 'Eng' is responsible for remembering their own password, 'Eng' level cannot access the passwords for other users.

NB. If the user does forget the password the user must be deleted from the recorder and start again. If 'Eng' user forgets their password and no access is available, contact us at **Honeywell** and an override password can be issued.

This password system allows traceability by the users name, not the password.

The messages screen will keep a record of all entries made into each level, by user name, and if access has been accepted or denied.

There are four levels of user:

- Engineer - Highest access to all levels, Supervisor, Technician and Operator.
- Supervisor - 2nd highest level including Technician and Operator access
- Technician - 3rd level including Operator access
- Operator - 4th and lowest level of access

Eng Password Entry

Select the MAINMENU button on the front of the recorder and select ***Setup, Edit*** and ***General***. From the ***General*** menu select ***Password***, and the ***Select User*** menu will appear. Initially only one user, 'Eng', will be available, press the ENTER button and using the Directional key and the Select button enter the default password "PASS".

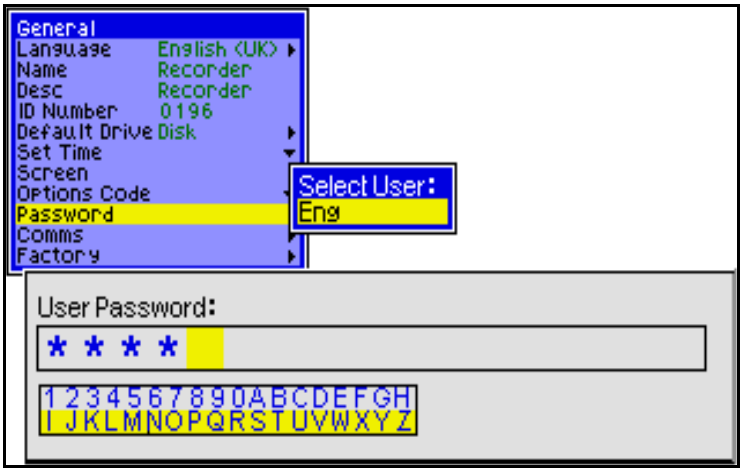

Enter the password carefully followed by the ***ACCEPT*** button from the on screen selection bar at the bottom of the screen. The Enable item on the password menu will now have a tick. Select ***FINISH*** and ***APPLY*** followed by the choice of ***SAVE, DISCARD*** or ***EJECT*** for the data.

The password system is now enabled and the Administrator or "Eng" can enter new users and new passwords.

Password Enable

When the 'Eng password is entered, the password menu will appear, press the enter button to ***Enable***.

Password Protect

These menus are only available to 'Eng' level users.

There are six areas in the recorder which can be protected from users. Access to these areas can be assigned using the ***Protect*** and ***Protect From*** menus.

NB. Password protection is controlled by the highest user level defined as 'Eng'.

Select each of the six areas, ***Setup, Record, Layout, Screen, Totals*** and ***Counters***. Decide at which user level each area is to be protected from, or not protected for all to access.

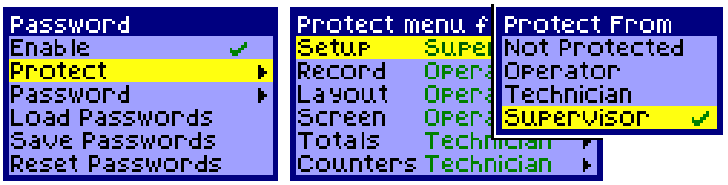

Notice the menu is labelled '***Protect From***', this table shows how to assign access. ***Protect From*** includes the highest user specified. i.e. if ***Setup*** is protected from the ***Supervisor***, neither the ***Supervisor's, Technician's*** or the ***Operator's*** passwords will work, so only the ***Engineer*** has access.

The Operator is the default access to the recorder, this is the lowest level, anybody using the recorder will have this level of access. No password will be required until an operator signs on as a User.

The password system is based around the following priority hierarchy.

Priority table		
Top level	-	Engineer
	-	Supervisor
	-	Technician
Bottom level	-	Operator

Access only	Protect From enter	No access to
Engineer	Supervisor and below	Supervisor, Technician, Operator
Engineer and Supervisor	Technician and below	Technician and Operator
Eng, Super, Technician	Operator and below	Operator
Eng, Super, Tech, Operator	Not protected	Access to all users

Password Allocation

Only 'Eng' level has access to these menus to add up to 10 User Names in to the recorder and assign a level to that user, Technician, Supervisor or Engineer. 'Eng' can not enter a password, the User enters their own when they first enter the password menu.

The ***User Name*** is entered using the text and character box. Once entered, press the button below ACCEPT from the on screen menu bar at the bottom of the screen.

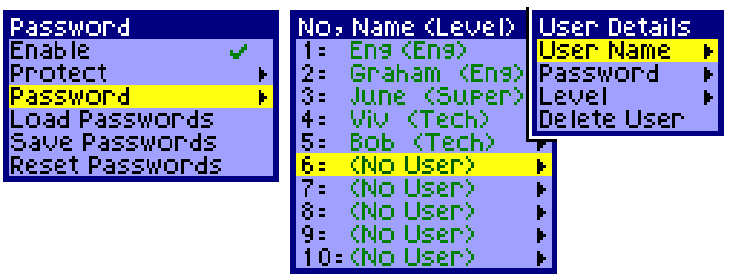

Also entered here is the ***Level*** of the user, this will restrict entry to the screens already setup in password protect.

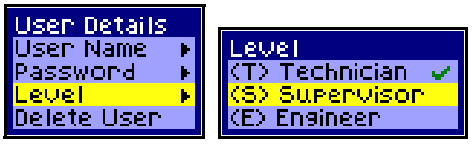

User Password Entry

Other users apart from the initial ‘Eng’ user will have to be entered on to the recorder, and their level set, by ’Eng’. *See “Eng Password Entry” on page 35.*

When the user enters the password menu for the first time, they will be required to enter a new password. This must be re-entered to confirm. All users, apart from ‘Eng’ level, will not be able to proceed any further in to the password set up.

Once a users password is entered their level immediately applies and they will only be able to access the areas set up by the ‘Eng’ level user.

Each user, including ‘Eng’ is responsible for remembering their own password, ‘Eng’ level cannot access the passwords for other users. If the user does forget the password the user must be deleted and start again.

Change Password

To change a user password, go to the main menu and select ***Change Password.*** Select the user and enter the users current password. Enter the new password, then re-enter to confirm. This new password is now active.

Password User Traceability

Every time a ***User***, entered into the recorder, enters any of the areas that are protected, it will be logged to the messages screen. The message will display the users name and which area they wish to access. It will show if the user ***Accessed*** or was ***Denied*** access according to their allocated user level. The messages screen will also show if a password setup ***Failed.***

Load Passwords

Use this function to load the passwords setup’s, including their levels, from a disk into other recorder setups.

Save Passwords

The save function saves all the password setups, including the allocated levels, onto disk. This is useful when setting up other recorders that require the same password setup.

Reset Passwords

Reset does exactly what it says. All passwords will be reset or cleared apart from the initial password for ‘Eng’ fixed into the recorder.

Comms for Ethernet

Refer to the **Honeywell** Communications manual for full details on recorder setup, system configuration, connection and installation requirements.

Function: External communications facility

Type: Menu select

Description: Ethernet communications ports to allow information to be transmitted and received.

Default: Enabled

The Ethernet connection is fitted as standard into all ***eZtrend V5***s. To activate/de-activate the comms in the recorder go to the ***Factory*** option in the ***General Set*** up menu. Select ***Comms Ports*** and activate Ethernet in the menu. *See "Comms Ports" on page 41.* Go to the Comms option in the General menu to produce these sub menus to configure the Ethernet setup. *See "Appendix E - Ethernet & E-mail" on page 101.*

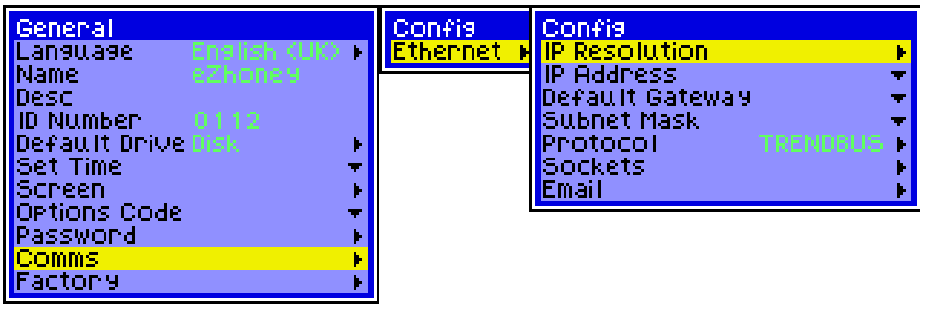

IP Resolution

IP Resolution is a mechanism which maps the IP Address to an Ethernet address. IP Resolution uses different types of protocol to translate the IP Address. The default is FIXED. Please see your IT systems administrator for selecting the type of resolution required.

IP Address

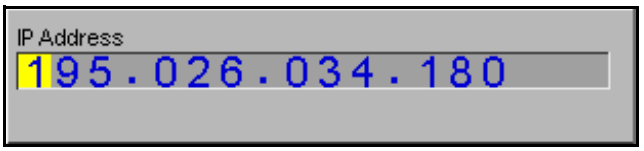

This is an identification address for communications between two peripherals. The IP Address identifies a specific recorder or device. Please see your IT systems administrator for allocating IP Addresses. Refer to the **Honeywell** Communications manual for full details (43-TV-25-08).

Default Gateway

This is a configuration parameter transmitted to each network device. Where an IP Address cannot be found in a local network, the default gateway sorts out getting traffic from one subnet to another. Please see your IT systems administrator for information on Default Gateways.

Protocol

Protocols define the format in which the data is transferred from the recorder to a PC or transfer between other devices and peripherals. The protocol for the ***eZtrend V5*** comms card using an ***Ethernet*** connection is ***Trendbus***. Trendbus is designed to allow the user to receive data from remote recorders, without having to retrieve the disk from the unit. If Trendbus is not required select ***None***. If None is selected, Ethernet can still be used for FTP down load or HTTP web browser. The None option just de-selects Trendbus without disabling the default options.

Sockets

The is a term given to a software object that connects an application to a network. It works by a using a program to open a socket and read and write data to and from the socket. Its a software object not a physical component.

Socket number should not need to change. This must only be changed for networking by advanced users. The socket numbers are set according to each type of socket.

HTTP is used for web browsing using the ***TrendServer*** software via an Ethernet connection. ***FTP*** is used for importing data from the recorder using ***TrendServer*** software via an Ethernet connection.

Subnet Mask

The Subnet mask acts as a filter when identifying IP Addresses. A single IP network can be divided into many subnets by using some of the bits of the host address portion of the IP address as a subnet. A mask is simply a screen of numbers that tells you which number to look at underneath. Please see your IT systems administrator for setting up the mask.

E-mail

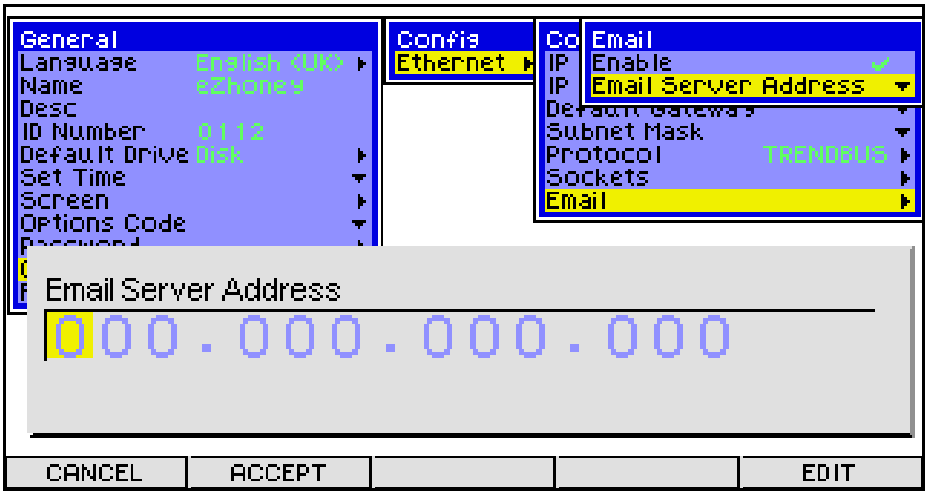

The E-mail facility is used in conjunction with the ***TrendManager Pro V5 Suite.*** Set up e-mails in the ***TrendManager Pro V5 Suite*** to send information to a specific recorder or device. Use this menu option to set up an ***E-mail Server Address*** so that information being transmitted to the recorder can be directed effectively. Tick to enable.

The recorder sends messages for distribution by a remote e-mail server. The e-mail server is located by its IP address as set-up in the communications set-up options. When the recorder sends an e-mail message, it locates the e-mail server you have configured and uses SMTP (Simple Message Transfer Protocol) to send the message to the e-mail server. SMTP allows the recorder to send messages to an e-mail server without having its own e-mail address; because of this the e-mail server will not be able to send any reply back to the recorder.

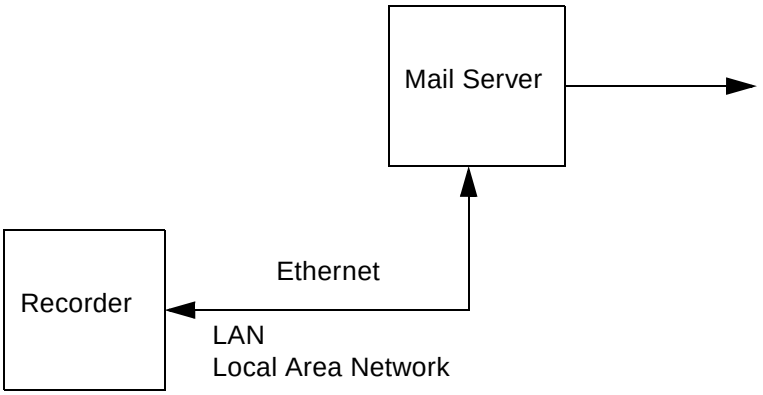

Factory

Function: Unit Calibration and Alarm card setup

Type: Menu selection

Description: Calibration of analogue input card and configuration of Relay/Digital.

Default: N/A

From the ***Factory*** option on the ***General*** menu use the directional key to select, as shown in *"Setup' on page 31*, press the enter button to generate the sub menus. Use this menu route to calibrate the analogue card for input or output of analogue signal. The ***Drives*** item is for the 1.4 Mbyte floppy drive disk only. ***Reset Setup*** will reset to the factory settings, highlight and press enter button. Follow on-screen instructions during this procedure.

Calibrate Input

The type of Analogue card fitted in this recorder has the following menu screens, within the ***Calibrate Input*** option. Up to 6 analogue channels are available. Individual input channels can be switched on or off by selecting ***Inputs*** and entering a tick or a cross in the ***Calibrate*** option.

Select Analogue In 'All' to identify which channels require calibration using a ✓.

'F' indicates the input is calibrated to the factory setting. If any power loss should occur the unit will retain the calibration settings at the time of power loss.

Input channels can be calibrated individually, indicated by the disappearance of the 'F'. The other inputs are not effected and will calibrate to the factory settings.

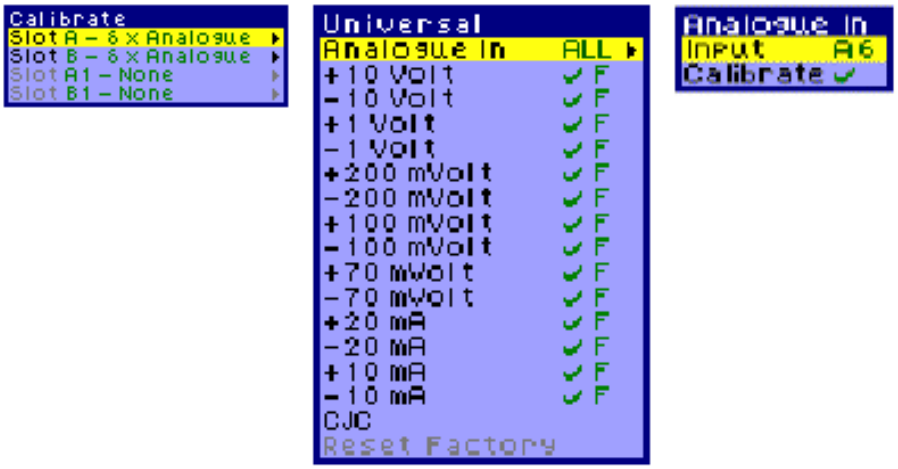

For detailed information on CJC Calibration see *See "Appendix H - Calibrate CJC" on page 109.*

Drives

Set up before leaving the factory, this menu will identify the type of drives fitted to the unit. Only the floppy drive is available on the ***eZtrend V5***.

Comms Ports

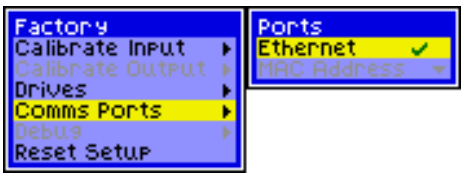

The Ethernet card has the option to connect to Web and E-mail (TCP/IP). The default state is with the Ethernet option enabled. *See "Comms for Ethernet" on page 38.*

The Ethernet card is required if the user wishes to import data using the ***TrendServer*** software package. The Ethernet option will also give access to recorder data on the Internet by use of a web browser.

MAC address

Short for Media Access Control address, a hardware address that uniquely identifies each node of a network. No action is required, the MAC address is a factory setting.

Reset Setup

This will clear all user configuration from the recorder except layout.

Vutronik Adapter Installation

The ***eZtrend V5*** recorder is available from the factory already built with a rear cover with integral connections that allow direct plug-in of the cable from a TDC system using Vutronik Trend Recorders. This cover is also available as a spare kit for retrofitting to a recorder, no additional wiring changes are required.

Fitting details for retro-fitting the Vutronik adaptor plate

1. Remove 4 off self-tapping screws and shakeproof washers which retain the rear panel to the case.
2. Hold rear panel in place and fit the two and three way connectors on the adaptor assembly into the recorder.
3. Retain adaptor assy onto rear of case using 4 off self-tapping screws and shakeproof washers.

Analogue Inputs

The Vutronik TDC Trend Recorders have 2 or 3 analogue inputs measuring 1 to 5V dc. Extra inputs can be wired in using the access slot on the underside of the adapter.

Connection details

This table shows the connection loom between the rear of the Honeywell recorder and the adaptor plate. Check to identify which Analogue Input card is fitted in the recorder as the connection details will be different.The IEEE 488 connector is the 50-way connector fitted to the adaptor plate.

Adaptor plate IEEE 488 50-way connector	Wire Colour	Recorder rear panel Universal Analogue Input card 24-way connector	Recorder rear panel Fast Scanning Analogue Input card 24-way connector	Recorder rear panel 24V DC 3-way
1	Blue	3	2	
3	Orange	6	5	
7	Green			3
17	Violet	8	8	
25	Black			2
26	Grey	4	1	
28	Yellow	7	4	
28	Brown	9	7	
50	Red			1

Start/stop chart function

The ***eZtrend V5*** will record continuously unless stopped manual using the functions on the keypad. The TDC system used a chart motor to start and stop the chart on the Vutronik recorder. Digital inputs can be wired in separately and used to perform the start/stop recording function using ***TMP V5 Software***. There is an access slot on the underside of the adapter.

Panel cut-out dimensions

The panel cut-out size is larger that for the ***eZtrend V5***, 138mm(5.43”) x 138mm(5.43”). The panel cut-out for the Vutronik adapter is 144mm(5.67”) x 138mm(5.43”). An adapter plate is available to allow for the difference, please contact your supplier for details. The adapter plate dimensions are 180mm(7.1”) x 160mm(6.3”).

The ***eZtrend V5*** with the adapter plate can also be used to replace the DPR100 AB & DPR100 C/D recorders that were being used to replace the Vutronik recorders.

For details on Replacing Vutronik recorders with DPR100, eZtrend or Minitrend V5, see V5 Application Note 17, 43-TV-07-17 available from your supplier, on the TrendManager Pro software CD and at http://content.honeywell.com/imc/

Chapter 5: Analogue In Setup

Analogue In

Highlight the ***Analogue In*** option on the ***Setup, Edit*** menu, from the Main Menu, and press the Enter button to generate the menu shown.

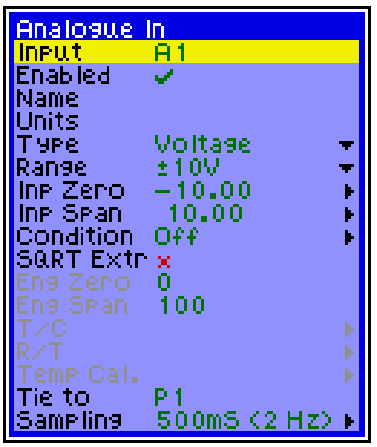

The Analogue In menu deals with the processing of analogue input signals and their conversion into a digital form, suitable for the later stages of the logging process such as ***Maths***. Depending on the options available on the unit, differing numbers of analogue channels can be selected. Channels can be set to the same configuration or set up with individual configurations.

We will now follow through the ***Analogue In*** menu.

Input

Function: Input channel identification

Type: Preset choice

Description: Identify and setup input channel configurations

Default: A1 (analogue input channel 1)

The ***Input*** is selecting the analogue input. On the ***eZtrend V5*** there are 2, 4 or 6 input channels available. The first input will be shown on the menu i.e. “A1” as indicated here. To set up the other inputs channels, press the enter button and use the directional key to navigate through to the required analogue channel. Press the enter button again to select when the relevant input is displayed.

Enabled

Function: To activate the analogue channels

Type: On/off switch

Description: Enables each analogue channel.

Default: Enabled

This enables the analogue input via a toggle switch, which shows as a **x** when off, or ✓ when active.

Name

Function: Analogue channel identifier

Type: 20 Character alpha/numeric

Description: User programmable identification

Default: N/A

This is the ***Name*** of the active analogue input channel. When this option is highlighted and the enter button is pressed for selection, the text box will be displayed along the bottom of the screen. Press enter again to reveal the character box. To edit the name follow the instructions in. *See "Text Entry" on page 29.*

Units

Function: Unit of measurement

Type: 11 Character alpha/numeric

Description: The measurement in units per input channel

Default: N/A

This is the unit of measurement for that particular input, e.g.***%*** or ***°C***. When this option is highlighted and the enter button pressed for selection, the text box will be displayed along the bottom of the screen. Press enter again to reveal the character box. To edit the ***Units*** follow the instructions in *See "Text Entry" on page 29.*

Type

Function: Type of Input signal

Type: Menu Selection

Description: Setting the type of input signal per channel

Default: Voltage

To choose an option, use the directional key to highlight the ***Type*** option and press the Enter button. Use the directional key again to select the required option and press enter.

For setting up instructions on Thermocouples and Resistance Thermometers *See "Thermocouple" on page 49.*

For further information on Thermocouple connections see, *"Appendix C -Thermocouple Connections" on page 93*

Range

Function: Specify the range for each input

Type: Menu Selection

Description: Selecting the value of the range

Default: ± 10V

The ***Range*** is dependent on the type of input selected previously. Use the directional key and the enter button to select an option. For Thermocouple or Resistance thermometer input ranges *See "Thermocouple" on page 49.*

Input Zero

Function: Value at the bottom of the range.

Type: 10 Character numeric

Description: This is the input value that equates to the bottom of the scale.

Default: 0

When selecting ***Input Zero*** there are now two choices, either ***Specify***, which will call up the relative prompt requiring a value to be entered see *See "Text Entry" on page 29.* The other method of setting up an input is to apply ***Sample*** signals of known values to the input. These values are internally calibrated which means that the zero and span values selected are referenced to known values within the unit.

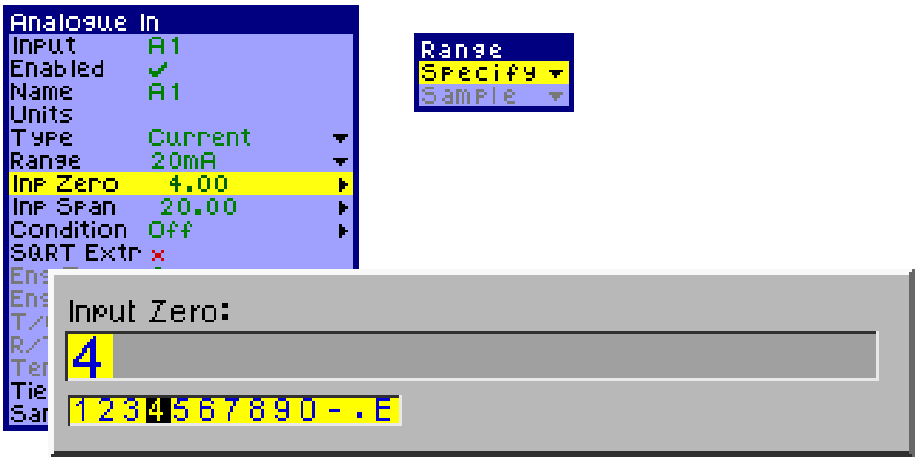

Input Span

Function: Value at the top of the range.

Type: 10 Character numeric

Description: Input value that equates to the top of the scale.

Default: 10.00

Refer to ***Input Zero*** for setting up instructions.

NB - The input zero and span must be within the selected range for correct operation

Conditioning

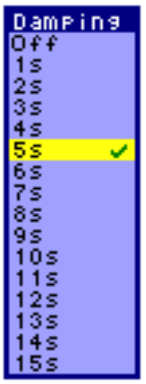

Function: Signal Conditioning

Type: Menu selection

Description: Damps noisy signals, filters transient anomalies

Default: Off

Damping

The damping option works by averaging sampled data over the allocated time. Signal damping can be set from 1 to 15 seconds irrespective of sample rate.

Transient Filter

Used to filter out any electrical interference from external influences.

The transient filter can be set up to ignore a momentary change in amplitude of a signal from its base line value to a higher or lower value, followed by a rapid return to the baseline value.

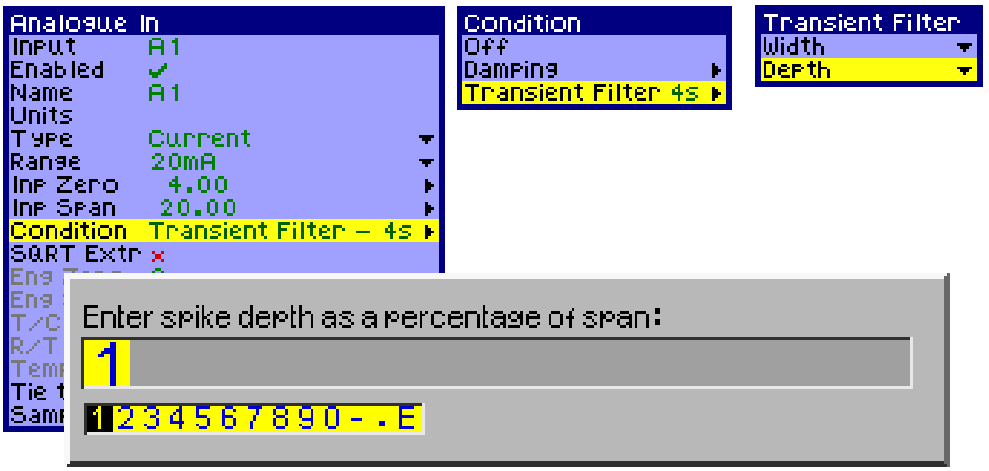

Set the ***Transient filter*** to disregard a specified type of pulse. The ***Width*** of the pulse, to be rejected, can be set from 1 to 15 seconds. The ***Depth*** of the pulse is entered as a percentage of the span. The span being defined by the Engineering span e.g. Eng Zero = -10, Eng Span = +10. Enter spike depth as a percentage of span = 20.

If the signal is within 20% of span, the point will be logged, if the signal is outside the 20% of span the signal will be logged as the previous point.

See "Engineering Zero and Engineering Span" on page 48.

Square Root Extraction

Function: To activate square root extraction

Type: On/off switch

Description: Enables square root extraction on a specific channel

Default: Disabled

This is a toggle switch which shows as a **x** when off, or a ✓ when active. It is a method for converting a non-linear signal into a linear scale.

The Square root extraction in the analogue input is used to linearize certain sensors that have a non linear output - for example in the calculation of flow. So when you check the Square root extraction in the Analogue input section it carries out the following calculation.

It ratios the analogue input range that you set, to 0 to 1.

So any sensor input is represented by a number from 0 to 1.

We then take the square root.

We then re ratio the result back to the user set range.

The resultant 'linearization carried out looks like this:

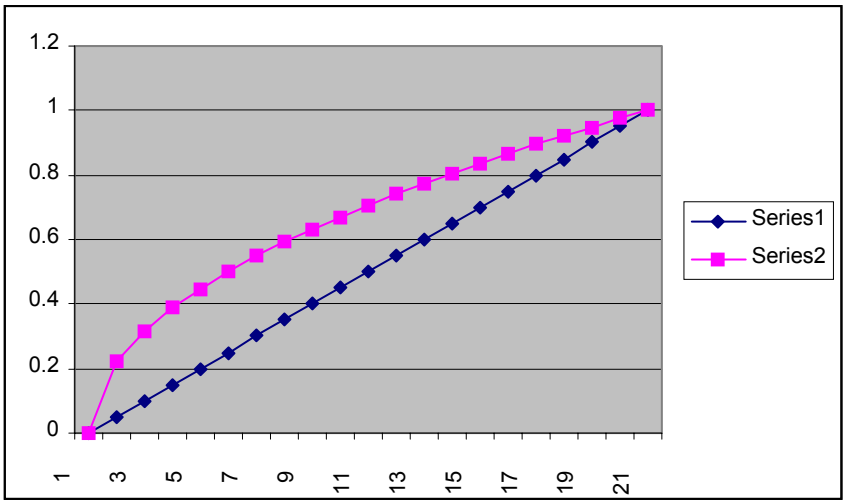

Engineering Zero and Engineering Span

Function: Setting of engineering units

Type: 10 Character numeric

Description: To allocate engineering units to the zero and span analogue inputs.

Default: Engineering zero = 0, Engineering span = 100

This facility can be best described by utilising the ***Setup*** window in ***TrendManager Pro V5*** as shown below.

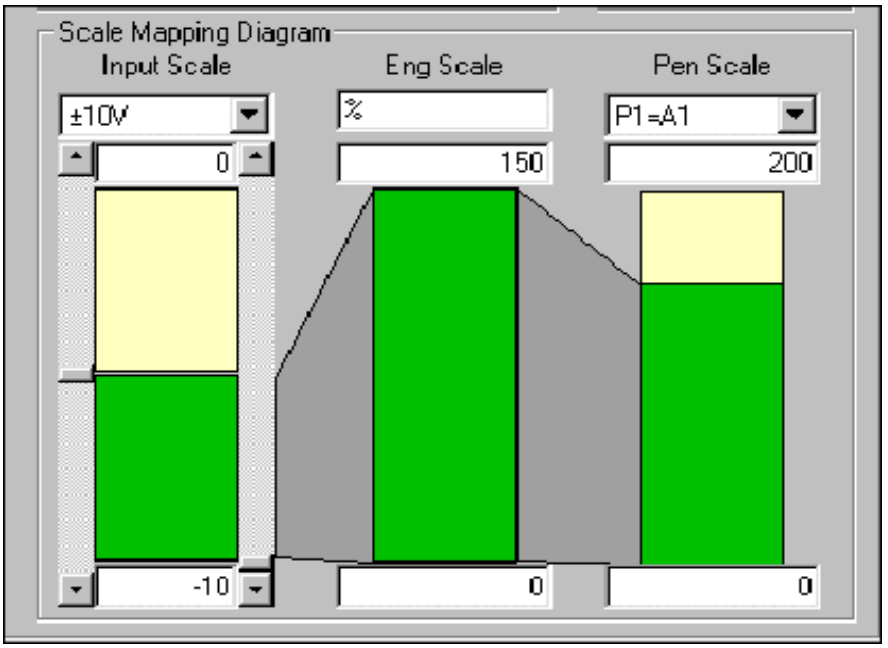

1. The input range is -10 to +10V. The sub-range is set to -10 to 0V

2. The input engineering scale is 0 to 150% but using span of -10 to 0 volts ie. 50% of input range

3. The pen scale is 0 to 200 but the input engineering scale is only 75% of that

The input range, left scale, is -10 to +10V, but data is only showing 50% of the scale. The engineering scale, in the middle, is 0-150% but only uses 50% of the data from the Input scale (-10 to 0). The effect is that of 'zooming in' on the signal i.e. the signal will appear bigger seeing 50% of the Input scale over the whole of the Engineering Input scale. The Pen scale, right scale, ranges from 0 to 200 but shows the Engineering Input scale reading only 75% of that. The effect will be 'zooming out' on the signal.

In this example -10V on the input will read zero on the pen scale, 0V on the input will read 150 on the pen scale. The top of the pen scale 150-200 will never be used

Thermocouple

Function: Temperature measurement

Type: Menu selection

Description: Selects thermocouple settings

Default: Type K

A ***Thermocouple*** is an electrical circuit comprising of two dissimilar materials. A voltage is generated which is dependent on the temperatures at the junctions forming the limits of the dissimilar materials.

Follow the on screen menus for each different type of input. For thermocouples enter the type, which reference junction is to be set for thermocouples, unit of measurement and finally specify upscale or downscale burn out.

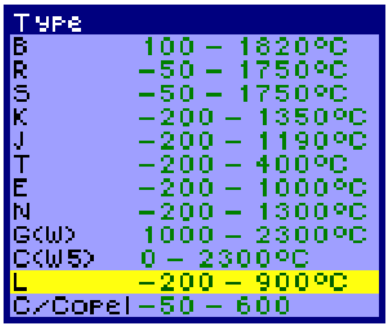

Type

Function: Type of thermocouple input

Type: Menu selection

Description: Setting the type of input signal per channel

Default: Type K

This is to specify the ***Type*** of thermocouple required. Different thermocouples are made from different materials which then measure over different ranges. Menu shown above.

Reference Junction

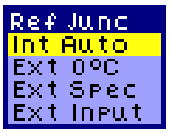

Function: Temperature reference

Type: Menu select

Description: Measures the temperature at the reference junction

Default: Int Auto

Int auto - Uses the cold junction sensor in the recorder as a variable reference temperature.

Ext 0 °C - Assumes the cold junction is held at 0 °C to provide a 0mV reference, external to the recorder.

Ext Spec. - Uses a ***Reference Junction*** held at a constant temperature. Specify the temperature that the cold junction sensor is to be set at.

Ext Input - Use a thermocouple or resistance thermometer from another channel to measure as the cold junction sensor.

Units

Function: Unit of measurement

Type: Menu selection

Description: The measurement in units per input channel

Default: °C

Select from the menu box the units of measurement required for either thermocouple or resistance thermometer inputs.

Upscale Burn

Function: Takes the signal in a specified direction if there is a break in the T/C.

Type: Menu selection

Description: Should the thermocouple break contact the signal will be driven in a specified direction if activated.

Default: Downscale

This enables the signal to be directed ***Upscale*** in the event of a break in the thermocouple. These operate via a toggle switch, which shows as a **x** when off or a ✓when active.

A ***Downscale*** function is also available which allows the signal to be directed downscale if there is a break in the thermocouple. There is also the ***Off*** option, to switch to no burn-out direction.

Resistance Thermometers

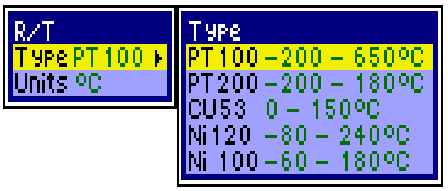

Function: Temperature measurement

Type: Menu selection

Description: Measurement of the resistance of the device produces its temperature

Default: Type - PT100, Units - °C

For the ***R/T (Resistance Thermometer)*** option, the ***Analogue In*** menu changes to allow the user to set up specific details.Follow the on screen menus for each different type of input. For resistance thermometer settings, just the unit of measure from this menu will be required. The resistance of an R/T increases with temperature.

Temperature Calibration

Function: Remove T/C and R/T inaccuracies

Type: Menu selection

Description: To allow adjustment to T/C and R/T measurements

Default: No Cal

Both thermocouples and resistance thermometers may require additional ***Temperature Calibration*** to eliminate system measurement errors. A single point calibration can be set up for each input using ***Set Cal Point.*** From the Inputs menu highlight and select ***Temp Cal***. To enable a calibration point to be set, highlight and select ***Use Cal***. From here another menu will give the options available.

Select and highlight the option required. Return to the ***Temp Cal*** menu. If ***Single or Dual point*** has been selected then the calibration point needs to be set in either ***Single Point Cal or Dual Point Cal***. Calibration can be in °C, °F, or Kelvin. Select ***Set Cal Point***, by using the directional key to highlight the option and the enter button to select the option required. Press the directional key again to produce the character selection blocks. *See "Text Entry" on page 29.*

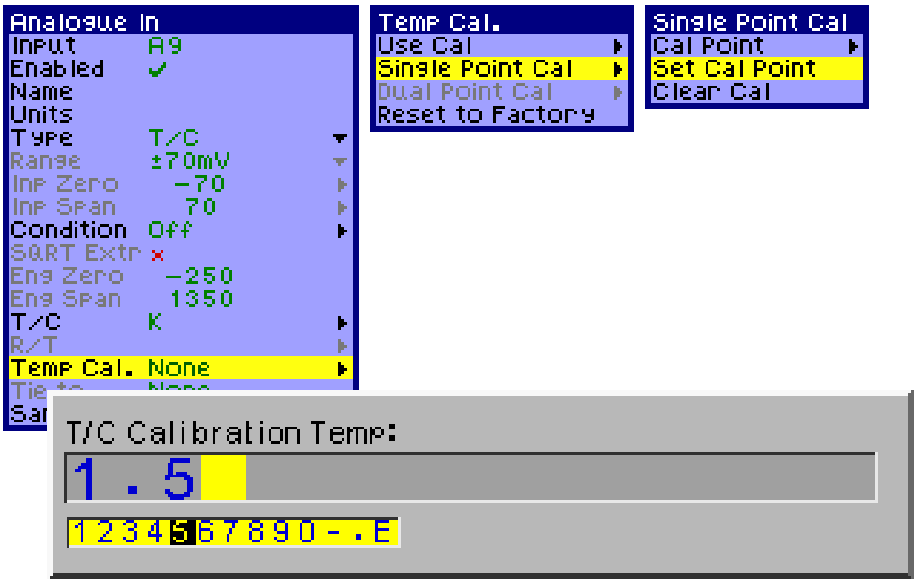

Tie To

Function: To tie the input engineering scale to pen scale

Type: Pen selection

Description: To allow the Pen scale and the Engineering scale to be independent of each other or to be linked together

Default: None

This is an option to connect the information on this input to a particular pen. The default is ***Tie to***, so if you do not wish the input scales to change together this must be set to ***None***. When active, a connection is made between the pen scale, engineering scale and the input scale. So if the pen scale is changed, the engineering and input scales will change too. To change or edit a tie to, highlight Tie to, press the directional key to select the option. navigate using the directional key until the required pen ID is displayed, press the enter button to select that pen. Press ***Finish*** on the on-screen selection bar, then press ***Apply***.

Sampling

Function: Analogue input sample speed

Type: Menu selection

Description: Sets the sampling for the base input card

Default: Normal, Sampling speed defaults to 500ms(2Hz)

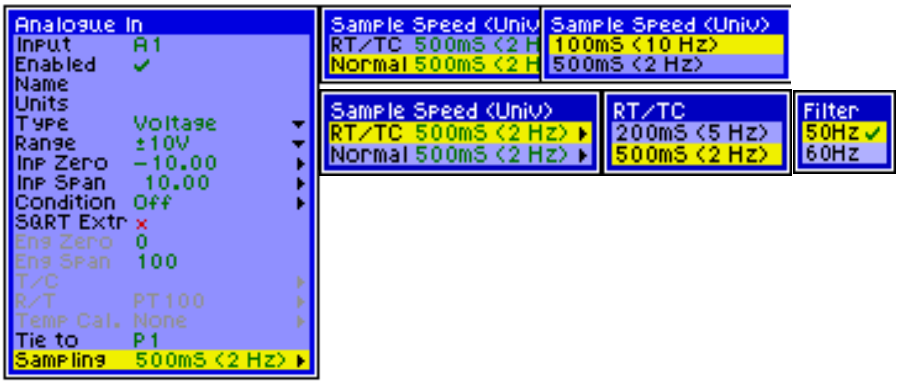

Normal sampling refers to the speed at which the card will run if voltage or current inputs are used. RT/TC sampling refers to the speed at which the card will run if any one or more of the inputs are set to RT/TC.

Normal input sample speed	RT/TC Sample speed
100 mS (10 Hz) 5 times per sec	200 mS (5 Hz) 5 times per sec
500 mS (2 Hz) twice per sec	500 mS (2 Hz) twice per sec

Pen speeds are not affected and the pen logging rate can be set higher than the sample speed for any input. The sample speed of 500 ms (2 Hz) will enable 50/60Hz ***Digital filter*** which will cut down external noise giving a more stable reading.

Chapter 6: Pen Setup

Pens

All available pens may be displayed as either a trend on a chart, a bargraph scale or as a digital panel meter or combinations of, see *"Screen Layouts" on page 24.* Pens can be displayed in groups using the Layout menu and assigning pens to a screen. *See "Layout" on page 77.* A pen can be assigned to show engineering units or display a maths expression. The ***eZtrend V5***, that has the Maths and Totalisers option fitted comes with 6 extra pens.

Highlight the ***Pens*** option on the ***Setup*** menu press the enter button to generate the menu shown opposite.

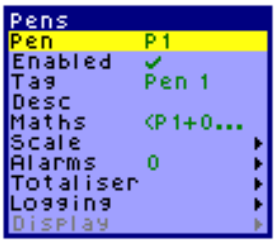

Pen

Function: Pen identification

Type: Preset choice

Description: Identify and setup pen configurations

Default: P1 (pen1)

The first pen will be shown on the menu ie. P1. To set up alternative pens, highlight the Pen option using the directional key and press the enter button to select. The available pens will scroll incrementally using the directional key. Press the enter button to select relevant pen.

Enabled

Function: Enables the pen

Type: Keypad activated on/off

Description: Activates each pen

Default: Enabled

This is a toggle switch which shows as a **x** when off, or a ✓ when active. Each pen can then be setup with information specific only to that pen.

Tag

Function: Active pen identifier

Type: 16 Character alpha/numeric

Description: A short name tag or identification for individual pens

Default: Pen 1

The ***Tag*** will be the identifier on any subsequent graph screens. Highlight this option using the directional key and then press the enter button for selection, the pen tag will be displayed along side the relevant bars or digital reading. To edit the tag follow the instructions in *"Text Entry" on page 29.*

Description

Function: Pen function

Type: 32 Character alpha/numeric

Description: For additional Pen information

Default: N/A

Use the directional key to highlight an option and the enter button to select. The pen ***Description*** will be displayed along the bottom of the screen. To edit the name follow the instructions in *"Text Entry" on page 29.*

Maths

Function: Maths calculations, available as an option

Type: 256 character alpha/numeric

Description: The maths expression allocated to this particular pen.

Default: A1 (for pen1)

Analogue signals may have a mathematical function performed on them before they are represented as a pen. Use the directional key to highlight an option and press the enter button for selection. The maths expression will be displayed along the bottom of the screen. For more information on maths *See "Appendix D- Maths Expressions" on page 97.* To edit the maths expression follow the instructions in *"Text Entry" on page 29.*

Scale

Function: Pen scale configuration

Type: Menu selection

Description: Information required to set up the pen scales

Default: N/A

Selecting ***Scale*** brings up a sub menu from which a further option menus appear, shown here. Highlight and select your entry using the directional key and the enter button. To edit the scale units follow the instructions in *"Text Entry" on page 29.*

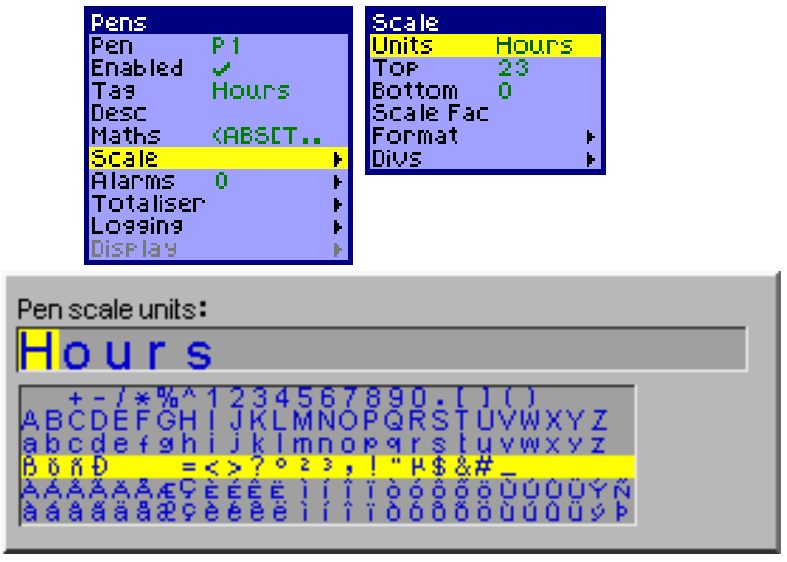

Units

Function: Scale measurement units

Type: 10 Characters alpha/numeric

Description: The units which the pen is measured in.

Default: %

Enter here the ***Units*** required for the scale measurement. Use the directional key to highlight an option and the enter button to select. The units will be displayed along the bottom of the screen. To edit the units follow the instructions for *"Text Entry" on page 29.*

Top

Function: Top scale value

Type: 10 Character alpha/numeric

Description: Reading shown at the top of the scale

Default: 100

The ***Top*** value allows the user to set the numerical value at the top of the graph display for a pen. To change or edit these values follow the instructions for *"Text Entry" on page 29.*

Bottom

Function: Bottom scale value

Type: 10 Character alpha/numeric

Description: Reading shown at the bottom of the scale

Default: 0

This value allows the user to set the numerical value at the ***Bottom*** of the graph display. To change or edit these values follow the instructions for *"Text Entry" on page 29.*

Scale Factor

Function: Scale value multiplier

Type: 8 Character alpha/numeric

Description: Reference scaling factor for representational use.

Default: None

Use this to avoid having large numbers displayed on the graph. A scale factor can be entered, by which the values on the scale can be multiplied to give the actual value being represented. This is shown at the bottom of the graph. The ***Scale Factor*** has no effect on the value being displayed- it is only for the user's reference.To change or edit these values follow the instructions for *"Text Entry" on page 29.*

Format

Function: Number of decimal places on the pen scale

Type: Single numeric character

Description: Pen scale format for up to 6 decimal places

Default: Auto = Automatic enabled

Automatic formatting for the pen scale defaults to 3 decimal places. Deselect ***Automatic*** to allow entry to manually set the number of decimal places. See table for automatic decimal place settings.

.

span of scale less than	Number of decimal places
10	4
100	3
1000	2
10,000	1

Divs

Function: Set up for chart major and minor divisions

Type: Major and minor 10 character numeric

Description: Allows the display to be divided into major and minor divisions

Default: Auto enabled

The chart background is divided into major and minor divisions represented by thin blue lines. The major divisions are also marked numerically on the bargraph. To change or edit these values follow the instructions for *"Text Entry" on page 29.*

Log Scale

Function: Enables a logarithmic scale to be in operation for a pen

Type: Toggle to enable on or off, set numeric ranges for log scale

Description: Displays a logarithmic scale according to ranges set, per pen.

Default: Disabled

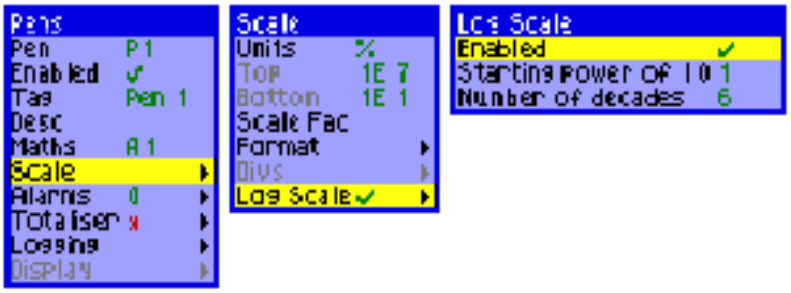

Enabled

To activate the log scale operation, first select the ***Log Scale*** option from the ***Scale*** menu, highlight ***Enabled*** on the Log scale menu and press the thumbwheel to toggle the **x** to a ✓. This will now operate a log scale for this pen.

Starting power of 10 (example)

Enter a numeric value of the lowest power of 10 for the log scale in the Text Entry box.

For example with a Log scale ranging from 10^4 to 10^{10}:

Enter the lowest figure for the starting power of 10 = 4

Number of decades

Enter a numeric value for the number of decades for the log scale in the Text Entry box.

For example with a Log scale ranging from 10^4 to 10^{10} :

Enter the number of decades = 6 (the difference between 10^4 and 10^{10} is 6 decades).

Pen Scales

Pen scales are determined by which one appears first on the Screen Configuration Layout list, see *"Pen Scale displayed on screen" on page 78.* The Pen at the top of this list will be the one displayed on the screen.

In this example shown, Pen 4 scale is displayed, Pen 4 is a Log scale.

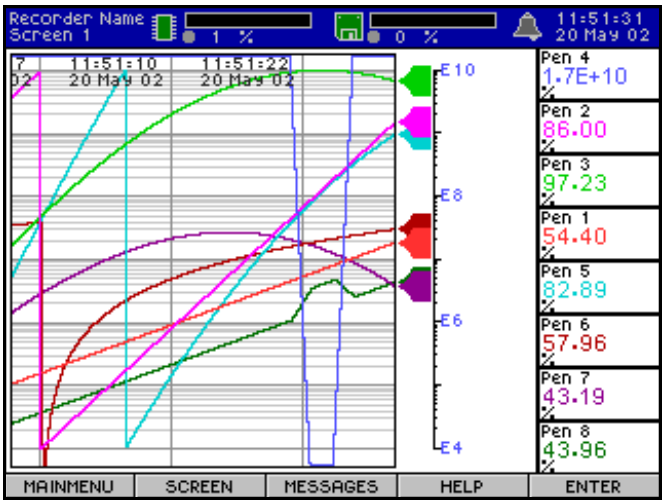

With a ***Chart*** displayed on the screen, a Log scale is labeled with its power of ten in the Format En. This chart shows a vertical log scale for Pen 4 extending from 10^4, labeled E4 to 10^{10} labelled E10. Within each decade are major and minor divisions.

Log scales displayed as ***Bars*** will show the same scale format En, as for the chart log scale, E4 to E10 plus the major and minor divisions in between.

The ***Digital*** value, max., and min. are displayed in floating point format. x.yE±nn.

Alarms

This is an option initially purchased with the unit or can be added to the recorder at any time.

Function: Pen specific alarm setup

Type: Menu select

Description: Configures alarms to a specific pen

Default: 0

There are two relay alarm cards available to the ***eZtrend V5*** either 4 relay output card or 6 relay output card with 2 volt free inputs. For connection details see *"Alarm Card (option)" on page 21.*

There are a total of up to 32 integral 'soft' alarms available in any combination for any pen to inform of selected out of limit conditions. So for example pen 1 could be allocated two alarms, pen 2 could have four alarms and pen 3 eight alarms, a total of 14 alarms out of a possible 32 alarms have been used. Pen 1 will use alarm numbers 1 & 2, pen 2 will use alarm numbers 3 to 6 and pen 3 will use alarm numbers 7 to 14. The procedure for setting each alarm is the same. Alarms can be configured to trigger at a specified levels and respond in various ways.

From the ***Pens*** menu, highlight and select ***Alarms***, using the directional key and the Enter button, this will produce the ***Alarms Menu***. An alarm can be allocated and configured to a pen using ***New Alarm*** *See "New Alarm" on page 58.* From here existing alarms can be edited by selecting ***Edit Alarm*** *See "Edit Alarm" on page 58.* Alarms can be deleted from specific pens using ***Delete Alarm*** *See "Delete Alarms" on page 58.*

New Alarm

Function: Create a new alarm

Type: Menu select

Description: To setup one or more new alarms per pen

Default: Alarm 1

- Alarm - The alarm number defaults to 1, of a possible 32.
- Create Alarm - Activates the complete menu for the setup of that alarm. For full menu details *See "Edit Alarm" on page 58.*

Delete Alarms

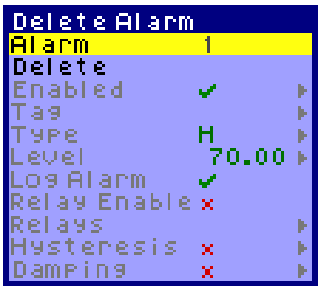

Function: To delete an existing alarm

Type: Menu select

Description: Deletes existing alarm and setup

Default: First active alarm for that pen

- Alarm - select alarm for deletion by highlighting ***Alarm***, using the directional key and pressing the enter button to select. Navigate the directional key to highlight the correct number of the alarm and press the enter button to select.
- Delete - Highlight and press to delete using the directional key and the enter button.

Edit Alarm

Function: Edit alarm features

Type: Menu select

Description: View and modify existing alarms

Default: First active alarm for that pen

Use this menu to configure the alarm specifications for each pen.

Alarm - Select alarm number by highlighting and selecting ***Alarm***, use the directional key to scroll through the available alarms for that pen, press the enter button to select.

Enabled - The menu option is either ***Always*** or ***Disabled*** activated by navigating the directional key to highlight ***Enabled***, press the enter button to select, from the next menu highlight the selection which will toggle from on (✓) or off (**x)**.

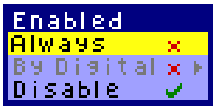

Tag - Or name by which each alarm can be identified. Highlight this option and press the enter button twice to display the text and character boxes. To edit the ***Tag*** follow the instructions in *"Text Entry" on page 29.*

Type - Specify whether the alarm is to be set high or low. Highlight ***Type*** and select, from the next menu select either ***High*** or ***Low***.

Level - The ***Level*** is the engineering units value and must be set within the ***Scale*** set for that particular pen. Highlight and select level, press the Enter button twice and follow the instructions. *"Text Entry" on page 29.*

Log Alarm - This is an on/off toggle ✓to enable **x** to disable. When activated, alarm activity will be logged in the system events screen, which can be located by pressing MESSAGES, found on the main screen selection bar during normal recording.

Relay Enable - Depending on the type of alarm card fitted there may be from 4 to 6 relays available. This menu shows the ***Relay*** state, each relay can be individually enabled on (✓) or off (**x).** Select which relays are to be closed in the event of an alarm being triggered.

Relays - Only operative when ***Relay Enable*** is activated. This will show the relay number currently being edited, switch enable on or off using the toggle mode (✓) on or (**x)** off**.**

Hysteresis - This is effectively a tolerance level for an alarm level. When enabled, the ***Adjust Level*** can be set. This allows a specific percentage value of the engineering span to be added on to an alarm level.

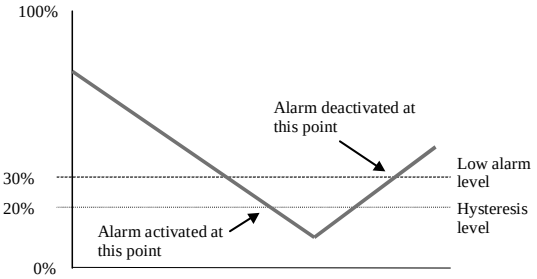

In this example, if a ***Low*** alarm is selected with a hysteresis value of 10%, a logged reading will have to be below the alarm level by at least 10% of the overall scale before an alarm is triggered.

Enable - this is a toggle on (✓) off (**x)** switch.

Symmetrical - The hysteresis value is divided on either side of an alarm level. In this example the adjust level is still the same, 10 %, but if hysteresis is selected as ***Symmetrical*** then the logged reading would only have to drop as much as 5% of the full scale value below the alarm level to trigger the alarm. For the alarm condition to

cease the logged reading would have to rise to over 5 % of the full scale value above the alarm.

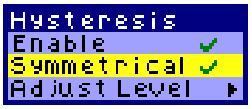

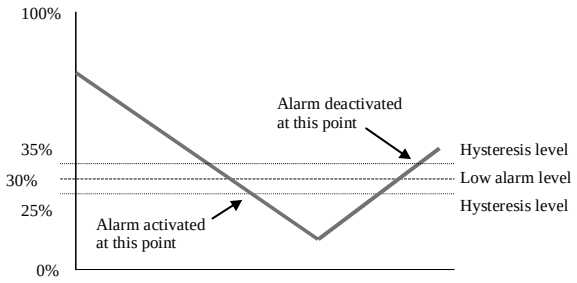

Low alarm - 10% Symmetrical hysteresis

- Adjust Level - Highlight and select this option using the directional key and the enter button, press the enter button twice more to display the numeric bars for entering the adjustment level. To enter a value see *"Text Entry" on page 29.*

Damping - With this facility enabled, an alarm level must be breached for a specific period of time before an alarm is triggered.

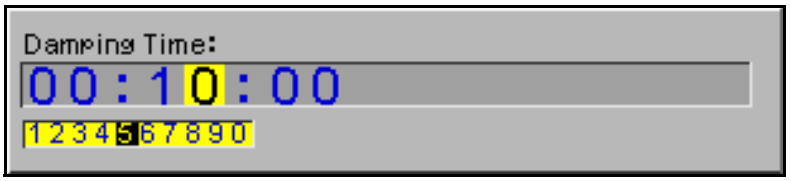

For example, if a ***High*** alarm with ***Damping*** time of 3 minutes is set, the input signal must stay above the alarm level continuously for three minutes for the unit to activate an alarm. If the input signal drops below the alarm level before 3 minutes is up, the ***Damping*** timer will be reset and start again the next time the alarm level is breached.

Totaliser

Totalisers are a Firmware upgrade option that can be added to the recorder at any time by obtaining a new options code from your supplier. Totalisers are purchased along with the Maths function which is necessary for the operation of the Totalisers. Totalisers are fully configurable using ***TrendManager & TrendServer Pro software.***

Totalisers are used to measure a total value. Each Pen has the totaliser function available and has a ***Factor*** which it uses to convert a measurement such as gallons per second into gallons per day, month or year, or any other value required.

The Maths function gives us the ability to input the information, to display the totals, and it gives us extra/virtual pens. Virtual pens are ones labelled P33 and higher and are used with math equations.

NB. Do not assume that since P33 will display the totalised value that the Totaliser must be enabled in that pen. This is not correct, we are only using P33 to display the Totaliser value, but that value is coming from Pen 1 (or whatever pen is to have its total value calculated).

A Pen can be used to display the total value of another pen using a maths expression. *"Displaying Totals" on page 64*

Please refer to Application Note 11 Totalisers on your CD or website

Totalisers can be set up from the recorder and in the Trend Manager software. There are two types of “Totaliser”

- **Generic Totaliser** - used for measuring a total value.
- **F sub 0 (sterilisation)** - user to display a total value measured by temperature.

NB. F sub 0 is not available on the ***TrendManager*** software, this can only be setup from the recorder.

F sub 0 (sterilsation)

For more information see *“Appendix G - F sub 0 Sterilisation” on page 107.*

When items are subjected to sterilisation by heating, the rate at which the micro-organisms are killed is dependant on the temperature.

Function: Totalises the value of a pen

Type: Menu selection

Description: A total value measured by temperature

Default: Disabled

- **Enabled:** toggle switch on (✓) or off (**x**), enables the F_0 totaliser for that pen.
- **F_0 total for completion:** Enter F_0 value required for completion run.
- **Start temperature:** Enter the temperature at which summation is started.
- **z Factor:** Enter the temperature z factor.
- **Include cooling phase:** Toggles summing of cooling phase on or off.

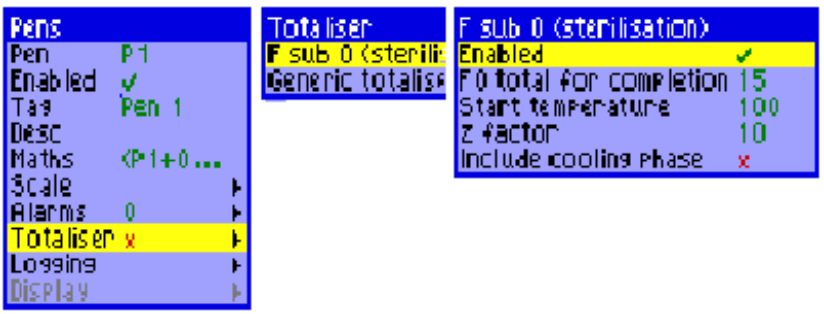

To turn on F_0 summation for a pen:

1. Select Main Menu |Setup | Edit | Pens, and select the required pen number from the Pens menu.
2. Select Totaliser F sub 0 (sterilisation), and then highlight the Enabled menu option in the F sub 0 (sterilisation) menu and press the Enter key.
3. Select the F0 total for completion menu item, press Enter, and in the edit box enter the required value in the edit box and Accept it.
4. Select the Start temperature menu item, press Enter, and in the edit box enter the required start temperature in degrees Celsius and Accept it.
5. Select the z factor menu item, press Enter, and in the edit box enter the required value of the z factor in degrees Celsius and Accept it.

6. Select the Include Cooling Phase menu item and toggle the value on or off, as appropriate, by pressing the Enter key
7. Press Back, or Finish, then Apply, etc. in the usual way to commit the changes.

Generic Totaliser

Function: Totalises the value of a pen

Type: Menu selection

Description: A total value measured over a timed period

Default: Disabled

The ***Generic Totaliser*** function is normally associated with flow monitoring applications, where the input to the recorder would be a measure of flow rate (ie. in litres per second) and the total amount that has flowed over a certain time period (ie.cubic metres). Totals can be assigned to individual pens. To setup the Totals for a pen, select ***Totaliser*** from the Pens setup menu, this will generate the totaliser sub-menu. Select Generic Totaliser to produce the following menu.

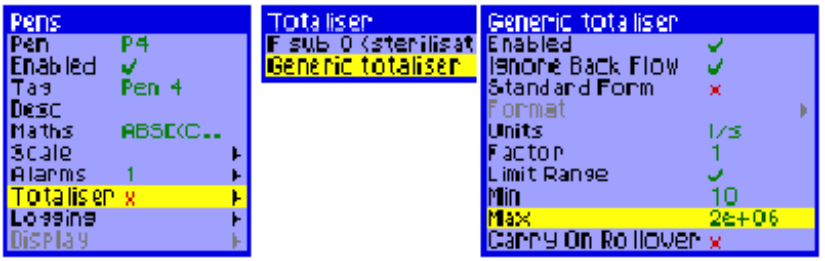

•**Enabled:** toggle switch on (✓) or off (**x**), enables the totaliser for that pen.

•**Ignore Back Flow:** If the flow reading should go into a negative value, e.g. the flow meter has been switched off, and the ***Ignore Back Flow*** option is non activate (**x**) the totaliser will start to subtract from the total value. When enabled (✓) any negative values are ignored and the total value will be held while the flow meter is off.

•Standard Form: With this function enabled the total values will always be displayed in standard form (eg.2.76823e+09) regardless of the length of the number.

•Units: This is the units of measure for the totaliser.

•Factor: This is the totalising Factor for the conversion from pen input units to totaliser value.

•Limit Range: Toggle switch (✓) to activate the minimum and maximum ranges.

•

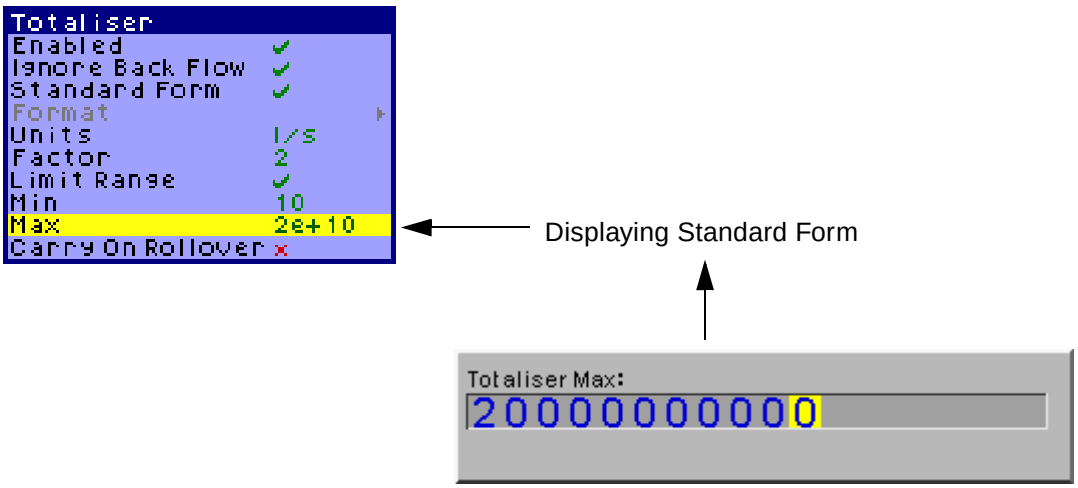

•Min: Activated by enabling the Limit Range. Set the minimum limit for the totals to range from.

•Max: Activated by enabling the Limit Range. Set the maximum limit for the totals to range to.

•**Carry On Rollover:** Activated by enabling the Limit range. When the total exceeds the maximum scale limit the total will reset to the minimum limit. When activated it will carry over any amount in excess of the maximum scale limit.

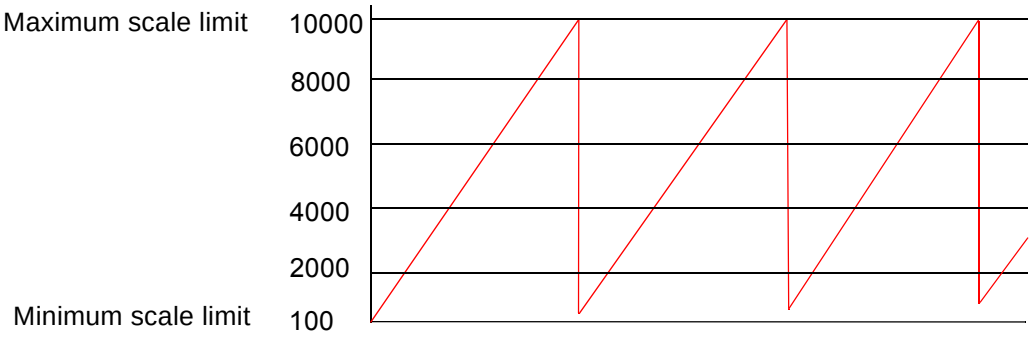

This example has a scale range set from 100 to 10000 with increments every 500. When the reading reaches the maximum scale of 10000 it will be over range by 100 (starting at 100, 20 increments of 500 will equal 10100), with Carry On Rollover activated the residual of 100 is added to the next minimum scale limit.

Displaying Totals

Six extra pens are available with the Maths and Totaliser option. Choose a spare pen to display the total of another pen using the Maths expression. *See "Appendix D- Maths Expressions" on page 97.*

In this example pen 1 (P1) is being used to display the ***Total*** of pen 2 (2). Pen 2 (2) is shown here being divided by 10 (10), this divisor may be necessary to divide the ***Total*** so that it does not to exceed the pen scale limit of 1,000,000.

P1 = T[2,10]

NB: Do not omit the divider (10), a divisor must be added even if it is 1.

Logging

Function: Pen specific logging set up.

Type: Menu selection

Description: Storing data to disk by specifying relevant information

Default: Disabled

Selecting ***logging*** brings up sub menus from which further options appear. These will now be listed in detail.

Normal

Function: Normal log mode set up.

Type: Menu selection

Description: Specific pen during operation

Default: N/A

This takes you to further setup menus. When the unit has ***logging*** enabled it is then necessary to state the ***Type***, ***Method*** and ***Rate*** of logging.

Enabled

Function: Activate logging

Type: Keypad activated on/off

Description: Enables logging for each pen

Default: Disabled

This is a toggle switch which shows as a **x** when off, or a ✓ when active. Each Pen can then be setup with individual logging information for that pen.

Type

Function: Type of logging

Type: Menu selection

Description: The format in which data is logged

Default: Continuous

Once enabled the ***Type*** of logging can be ***Continuous***, only logging when an ***Event*** occurs or ***Fuzzy***.

For Continuous logging, highlight and select, then go to *"Method" on page 65*

Fuzzy logging was developed as a secure data storage technique which has self teaching data storage algorithm so the recorder stores data at a variable rate to match the process being monitored. *See "Appendix G - F sub 0 Sterilisation" on page 107.*

Fuzzy logging has intelligent resources to enable the most effective and efficient way of using the Scan rate, Disk capacity and Recording time.

Select ***Fuzzy*** to produce this menu.

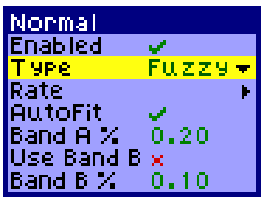

Enable Fuzzy logging with a ✓ and select the ***Rate*** option.

This will reveal two items, the ***Value*** and the ***Units***, set these to the desired rate for logging.

AutoFit ensures that the last sampled data point is logged before the signal goes out of the tolerance set in Band A or Band B. When displayed on a graph, the input signal will automatically fit to this last logged point.

Band A% is where the tolerance is set for the input signal. Specify, as a percentage, the tolerance band allowed above and below the input signal.

Use Band B to enable a second tolerance to be set, ✓ to activate.

Band B% This is where a tighter tolerance can be specified which must be set within the limits of Band A. Specify, as a percentage, the tolerance band allowed above and below the input signal.

Method

Function: Style of logging

Type: Menu selection

Description: The way in which the logged data is collected.

Default: Sample

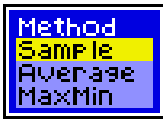

The ***Continuous*** logging option will require a ***Method*** of how the data is to be logged.

- ***Sample*** logs the last sampled reading.
- ***Average*** logs the average of all the samples taken since last log.
- ***Max / Min*** logs the highest and the lowest of the sampled readings since last log.

Rate

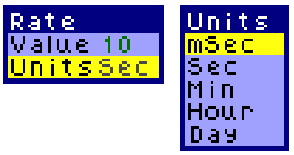

Function: Logging rate, speed

Type: Menu selection

Description: Set this to how often data is logged

Default: Value = 10, Units = Secs

Rate of logging is determined by first entering the ***units*** of measurement then setting their ***value***. To change or edit these values follow the instructions in *"Text Entry" on page 29.*

If the units required are 'msec' the value screen will appear as shown here. This measures the value in Hertz (Hz), this measurement is then converted into the value in 'msec' i.e.: 5 Hz = 200 Msec.

NB. Hour and day logging rates are not available for Fuzzy logging.

Device

Function: Store logged data

Type: Menu selection

Description: Down load logged data to Floppy disk

Default: Disk

The only ***Device*** available on the ***eZtrend V5*** is 1.44 MByte floppy disk drive.

Chapter 7: Relay Alarm Cards

Relay/Digital can only be obtained on the recorder if the alarm card fitted is capable of both inputs and outputs. There are two different types of Relay/Alarm card available for the ***eZtrend V5*** but only one has both inputs and outputs.

Relay Alarm Cards	Ratings
4 channel relay alarm card (Output only)	3A 240V a.c.
6 channel relay output/2 volt free digital inputs	3A 240V a.c.

Relay/Digital

Function: Specify relay/digital I/O

Type: Menu select

Description: To configure relay/digital input or output status

Default: Channel 1, Label D1,
On state On, Off state Off,
As Input x, As Output ✓,
Fail Safe x, Log digital Off.

Select each item required on the ***Relay/Digital*** menu:

Channel: Highlight and press the enter button, use the directional key to change the channel number. Select channel number required for configuration as a relay/digital input or output channel.

Label: 15 character alpha/numeric.
Highlight and press the enter button twice to activate the label block and the character display block. Allocate a name by which the relay/digital can be identified.

On State: 11 character alpha/numeric
Highlight and press the enter button twice to activate the Digital On State and character display block. This is what will be displayed in the messages list when an relay/digital is in its 'On State'.

Off State: 11 character alpha/numeric
Highlight and press the enter button twice to activate the Digital Off State and the character display block. This is what will be displayed in the messages list when an relay/digital is in its 'Off State'.

As Input: The first 6 channels are set to outputs. The 6 channel output/2 digital input card has two inputs available on channels 7 and 8 select these chan-

nels and enable as inputs. The 4 channel card will have this option greyed out as no inputs are available with this card.

As Output: The 4 channel relay output card will show this enabled for all 4 channels. The six channel output/2 digital input card will show this enable for channels 1 to 6 only, channels 7 & 8 are set to inputs.

Fail Safe: Toggle fail safe ✓On or **x** Off.

A ***Fail safe*** operation can be activated on the ***Output*** on a channel by channel basis. Fail safe, when enabled, holds the relay in an energised state until triggered by an alarm when the relay is de-energised. Any power failure will cause the same result.

N.B. Fail Safe and Maths

However, when using output relays in a maths expression be aware the maths is reporting the literal state of the relay.

An example of this would be:-

If Pen 1 (P1) equals output channel 4 (O4) and Fail safe is On with no alarm triggered, the relay will be energised and P1 will return 1.

P1= O4

Log Digital:

Setup each Digital individually. Default is set to ***Off***, so no logging of any relay/digital events will be recorder on the Messages list or on any chart.

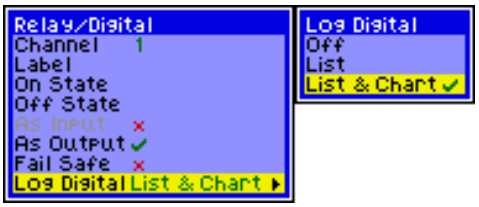

Use this box if digital activity is required to be logged to either ***List***, which is the Messages list, or to ***List & Chart*** which is recorded on both the chart and in the messages list. Repeat for each channel. *See "Messages" on page 27.*

Chapter 8: Setup Complete

Setup complete

Whilst making alterations to the recorder setup, the recorder has still been recording data with the previous setup. When the new setup is complete select ***APPLY*** and the recorder will ask if you wish to save the previously logged data and setup to disk. If the data logged whilst creating the new setup is not required select ***DISCARD***.

When the setup is complete, select the ***FINISH*** button from the on screen selection bar at the bottom of the screen. The options are to ***APPLY*** the changes, ***CANCEL*** the changes and return to the main menu or go ***BACK*** to the previous menu.

APPLY - From here the options are to ***SAVE*** the log data, ***DISCARD*** the log data or ***EJECT*** the current disk for possible replacement. During ***SAVE*** an hourglass symbol will appear and the drive can be heard logging the data.

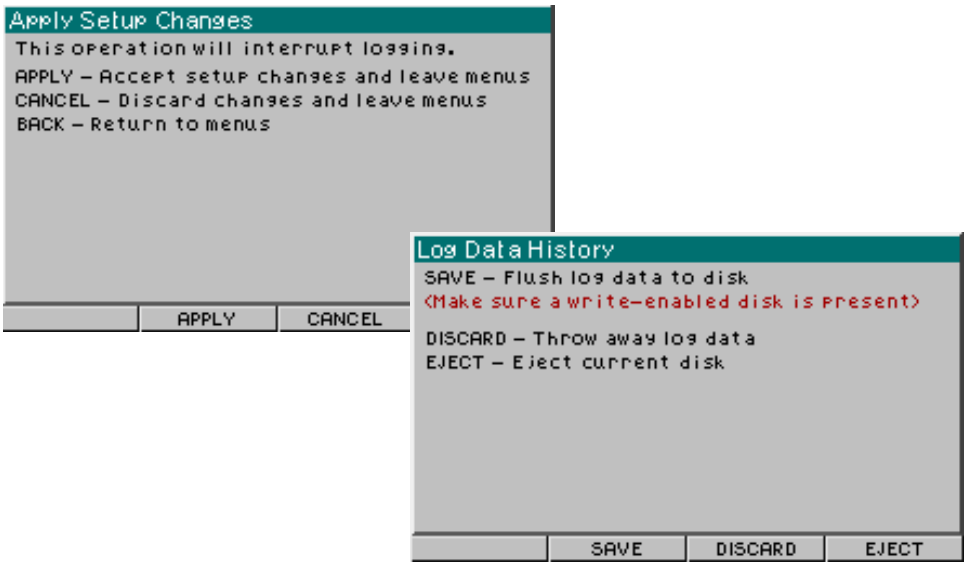

Load

Function: Import setup to the recorder

Type: Button activated

Description: To Import a setup from *TrendManager Pro V5 Suite* or other recorder

Default: N/A

Use this option to import data setups from disk when:

1. Setups have been exported to disk in ***TrendManager Pro V5 Suite*** previously.
2. Setup of one recorder is very similar to another, therefore only a minimal change would be required.
3. One recorder may be used to monitor several functions and may need more than one setup to do so.

Importing setups will interrupt logging and will cause the existing setup to be shut-down and saved, then the new setup will be executed.

Select setup from the ***Main Menu***, use the directional key to highlight the ***Load*** option, press the enter button to select. The ***Import*** screen will appear, there are two options available. Follow the on screen instructions to complete importing or to cancel this operation.

Save

Function: Save setup only (no data)

Type: Menu Selection

Description: To save the recorder setup for transfer on disk to *TrendManager Pro V5 Suite* or to another recorder

Default: N/A

After completing a new setup either through editing the menus or importing one select ***Save*** to store. Use this option to export the setup only to disk under the same circumstances as importing setups. Use the directional key to navigate until ***Save*** is highlighted, press the enter button to execute the action. Always check there is a disk in the drive prior to using this function.

Chapter 9: Recording

Recording

NB. Validate disk before recording. *See "Validate Disk" on page 72.*

From the MainMenu, select ***Recording*** to produce this menu.

Enabled

Function: To activate recording

Type: On/off switch

Description: Enables the recording of data

Default: Disabled

This is a toggle switch which shows as a **x** when off, or a ✓ to activate recording.

Log to Disk

Function: To activate logging to disk

Type: On/off switch

Description: Enables logging to disk

Default: Disabled

This is a toggle switch which shows as a **x** when off, or a ✓ when the disk drive is accessible.

Save Data and Eject Disk

Function: Down load sampled data

Type: Thumbwheel activated

Description: Allows data to be stored to disk at any time.

Default: N/A

This option allows stored data and the recorder setup to be copied to disk at any time, you do not have to wait for the recorder to make a timed dump of recorded data to disk. It is only available when a disk is loaded in the recorder. When ***Log To Disk*** is not enabled ***Save Data and Eject Disk*** is displayed in grey text, thereby indicating the option is unavailable. Always check there is a disk in the drive prior to using this function and use the ***Validate Disk*** function before saving to disk. *See "Validate Disk" on page 72.* Use this option to store blocks of recorded data to disk which may be in a queue awaiting automatic transfer to disk.

Validate Disk

Function: Check disk

Type: Thumbwheel activated

Description: Initiates and verifies disk status

Default: N/A

Before saving to disk, use the ***Validate Disk*** function to instruct the recorder that a disk is present. The busy egg timer will appear while the function initiates the disk and checks for any corruption.

Chapter 10: Totals

Totals will not be active from this menu until the ***Totaliser*** is enabled. *See "Totaliser" on page 60.,* for setting up totalisers in the Pen Setup Menu.

Start All Totals

Select the ***Start Totals*** option by using the directional key to highlight and activate by pressing the enter button. This takes immediate effect.

Stop All Totals

Select the ***Stop Totals*** option by using the directional key to highlight and activate by pressing the enter button. This takes immediate effect.

Reset All Totals

Select the ***Reset Totals*** option by using the directional key highlight and activate by pressing the enter button. This takes immediate effect.

Chapter 11: Change Password

Changing an Existing User Password

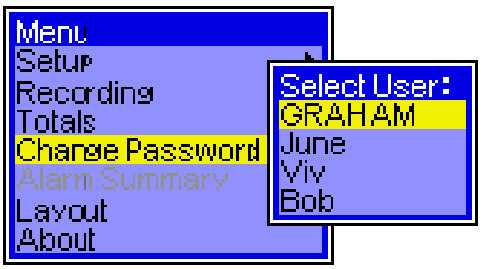

This is where the user can change their password, at any time.

The User must already be entered on to the recorder and have an existing password. Users can only be entered on to the recorder by someone at ‘Eng’ level. The ‘Eng’ level user enters all the users and assigns their user level of access. *See “Password” on page 34.*

Select ***Change Password*** followed by the ***User*** name. Enter the current password, then enter the new password. This has to be re-entered to confirm the new password.

The new password is in the now in the system and will be required when the user logs on.

Chapter 12: Layout

Layout Configuration

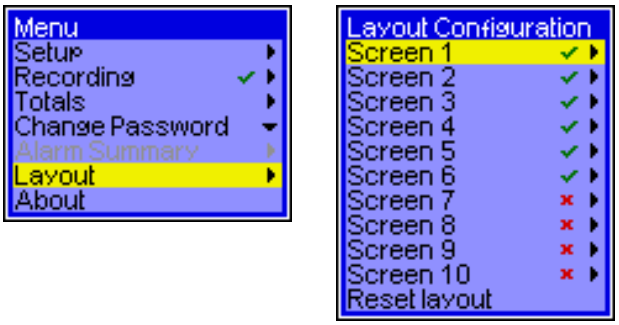

Selecting and Re-naming Screens

From the Layout configuration menu select a screen, e.g. ***Screen 1***, and press the enter button. The screen must be ***Enabled*** by placing a ✓ against it. Up to ten screens can be set up individually with different pens allocated to specific channels.

The ***Label*** is the name given to a screen and can be renamed, by highlighting the option using the directional key and then press the enter button. Press the enter button once more to activate the character box. Using the directional key navigate up and down the rows then press enter to select. Use the directional key again to travel right and left along the rows to select a character, then press the enter button. *See "Text Entry" on page 29.*

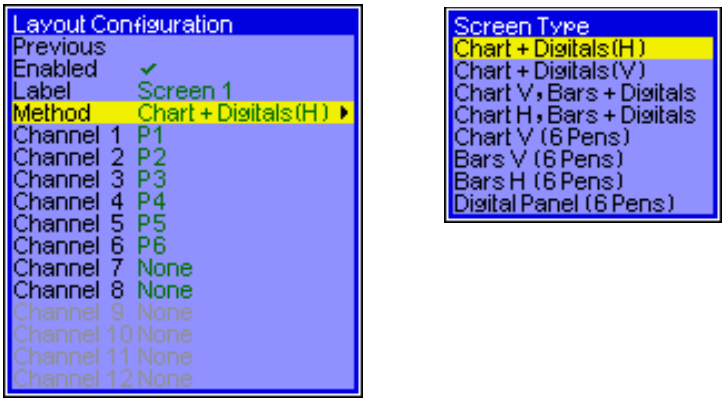

The ***Method*** in which the data on the screen is presented. The ***eZtrend V5*** has eight variations of screen layouts to choose from. All the layouts are displayed on *"Screen Layouts" on page 24.*

Scroll down to each channel on the Layout Configuration menu and assign the pen required to display each channel.

Pen Scale displayed on screen

The pen scale that is displayed on the screen is determined by the Pen which appears at the top of the list for each screen. In the graphics displayed in this section Pen 1 is ate the top of the list so this is scale set for this pen is the one that will be displayed on the screen. To change this simply scroll down to the first pen on channel 1 and select by using the thumbwheel. Rotate the thumbwheel to change the pen number. The Pen number now placed at the top of this list will have its corresponding scale displayed on the screen.

Data display evaluation

These charts shows the chart speed in millimetres per hour against the amount of time shown on the screen and the amount of time stored in the buffer.

Chart speeds

.

eZtrend V5					
Chart speed	***Screen display time***			***Buffered time available for replay***	
mm per hour	**Days**	**Hours**	**Mins**	**Days**	**Hours**
1	2.71	65.00	3900.00	59.29	1423.00
5	0.00	13.00	780.00	11.86	284.60
20		3.25	195.00	2.96	71.15
30		2.17	130.00	1.98	47.43
60		1.08	65.00	1.00	23.72
120			32.50		11.86
600			6.50		2.37
1200			3.25		1.19

A section of memory is allocated to 'Screen' data, this memory is in fixed areas. And can accurately relate the length of the 'chart' in time to the speed of the chart - shown in this table i.e. the faster the chart, the quicker the allocated memory is used up for that chart, the shorter the replay available.

Chapter 13: Software

The ***eZtrend V5*** recorder can be used in conjunction with the ***TrendManager V5 Software Suite***. The software is a Windows compatible (see item 10), integrated software solution to configure recorders, archive and analyse data and distribute data plant wide.

Software License/Warranty

Please refer to the Software manual 43-TV-25-11 for software licence and warranty information.

Features

1. Conflict free graphing of the same recorder or real-time data source by several users simultaneously.
2. ***Time Bar*** indicating the time of the data displayed in units of: year, month, day, hours, minutes, seconds, tenths, hundreths and milliseconds.
3. Data from recorders in a different database can be graphed on the same graph.
4. ***Data Locator*** now optionally displayed on the graph screen.
5. Seamless graphing of data on local and remote databases.
6. Full client server implementation.
7. FTP (File Transfer Protocol) - used for transferring data files over the Internet providing access to down load and import data through remote Ethernet connection to one or many recorders.
8. Fuzzy logging - Self teaching storage rates recording data at a variable rate matching the process being monitored. 10:1 data compression, saving more data to disk and saving disk space.
9. Events system based on a ‘cause’ and ‘effect’ method with up to 9 possible causes triggering up to 8 different effects.
10. Windows™ 98SE, NT4 service pack 6 (onwards), ME, 2000, and XP compliant.
11. Password protection - protects screen entry, restricting access within the recorder and providing password protection at different level.
12. Web browse a recorder with an IP Address (network use).
13. Load up a setup from a PC to a recorder with an IP Address via Ethernet.
14. Event system now includes sending E-mails when an event is triggered.
15. Event View Filter allows the events displayed on the graph to be cut down to a specific type of event e.g. Alarm, Digital, System, User or Marker.
16. Audit Manager enables the user to setup an audit trail which records who’s logging on and off, when and what they did.
17. Realtime data transfer to ***TrendServer*** for display, graphing and logging.

18. A Communications Server to manage the communication status of the recorder on an Ethernet connection.
19. Remote Server and Database access via an Ethernet link.

Items 5, 6, 7, 8, 12, 13, 16, 17, 18 and 19 apply to ***TrendServer*** only.

.

Features	TrendViewer	TrendManager Pro	TrendServer Pro
Import data from disk	✓	✓	✓
Graph data	✓	✓	✓
Upgrades available via download (www.trendview.com)	✓	✓	✓
Print graph data	✓	✓	✓
Print recorder configurations		✓	✓
Full Configuration of any recorder on PC		✓	✓
Fuzzy logging		✓	✓
Events System		✓	✓
Archive data on secure databases		✓	✓
Export using CSV format		✓	✓
Export using OPC links			✓
Communicate with up to 256 recorders on RS485			✓
Communicate with recorders using Ethernet TCP/IP			✓
Distribute recorder data over plant-wide LAN			✓
FTP/IP and Real time Ethernet connection			✓
Password protection			✓
Send setup to recorder via Ethernet			✓
Audit trail manager			✓
Web browse a recorder - web browser only required			

System Requirements

TrendViewer and ***TrendManager Pro*** require the following minimum specification:

- 200 MHz Pentium processor
- 3.5" floppy disk drive
- LS120/Zip drive.PCMCIA/Compact Flash
- CD - ROM drive
- Monitor - recommended screen resolution 1024x768 minimum requirement, high colour.
- Windows™ 98, NT4 service pack 6 (onwards), ME, 2000 and XP
- 32 Mbyte or more of RAM (64 Mbyte recommended)
- 10 Mbyte free hard disk space
- a Mouse

For ***TrendServer Pro*** the following minimum specifications apply:

- 450 MHz Pentium processor
- CD ROM
- LS120/Zip drive/PCMCIA/Compact Flash
- Monitor - recommended screen resolution 1024x768 minimum requirement, high colour.
- 2 Gbyte Hard-drive
- Windows™ 98, NT4 service pack 6 (onwards), ME, 2000 and XP
- 128 Mbyte RAM (256 Mbyte recommended)
- TCP IP installed
- a mouse

TCP/IP = Transmission Control Protocol/Internet Protocol is the main transport protocol used on the Internet for connectivity and transmission of data across heterogeneous systems.

With all of the ***TrendManager Pro V5 Suite*** performance improves with more RAM, faster CPU's, and faster and larger hard disk drives.

NB: It is recommended that at least 100 Mbytes of free hard disk space is available for archiving data. Please note the more logging and data being stored, the more free space on the hard disk is required. This is not required with ***TrendViewer***.

Chapter 14: Instrument Care

> **WARNING**
>
> **PERSONAL INJURY**
>
> To avoid any personal injury or damage to the unit, ensure that the power to the recorder has been turned off and mains have been disconnected before handling the unit.
>
> **Failure to comply with these instructions could result in death or serious injury.**

Your recorder is designed and manufactured to ISO9000 quality procedures and will give a long and trouble free life.

In the event of a unit failure contact your nearest Service Department (or an authorised agent) to arrange for the return of the unit for repair.

Battery Replacement

Battery Life

Recorders built pre- July 2002

Recorders built before July 2002 have an internal battery that is soldered in place and is not easily replaceable. If you have a recorder with an internal battery fitted, which has exhausted, the recorder must be returned to your supplier for replacement. There is a battery switch located on the side of the unit, see *"Case" on page 19*. With the battery switched on and the recorder power off, the battery should last for up to 12 months, with the battery and recorder power on, the battery should last for up to 10 years.

Recorders built post - July 2002

For recorders built after July 2002, the battery is easily replaceable, and it is not necessary to remove the rear panel to replace the battery. Removing the case and opening the back of the recorder should only be performed under the following circumstances:

- When an item of hardware requires individual replacement.
- When an item of hardware is to be retrospectively fitted.

In all other instances, it is recommended that the complete unit be returned for service to an authorised agent or service centre.

For warnings of possible data loss, see *"Battery Function" on page 15.*

Battery Fitting

Before attempting any maintenance on a recorder, it is advisable to clear a sufficient work space so components such as the front panel can be rested on the work surface without getting scratched or damaged.

⚠ WARNING

HAZARDOUS VOLTAGE LEVELS

- Voltage levels above 30V rms and 42.4V peak or 60V dc are deemed to be **'Hazardous Live'**.
- Refer to *"Replaceable Battery Data" on page 91* for further information.

Failure to comply with these instructions could result in death or serious injury.

NOTICE

This battery is not a standard 1.5V AA cell.
Refer to *"Replaceable Battery Data" on page 91* for recommended manufacturers.

FIGURE 1. Rear view showing battery holder

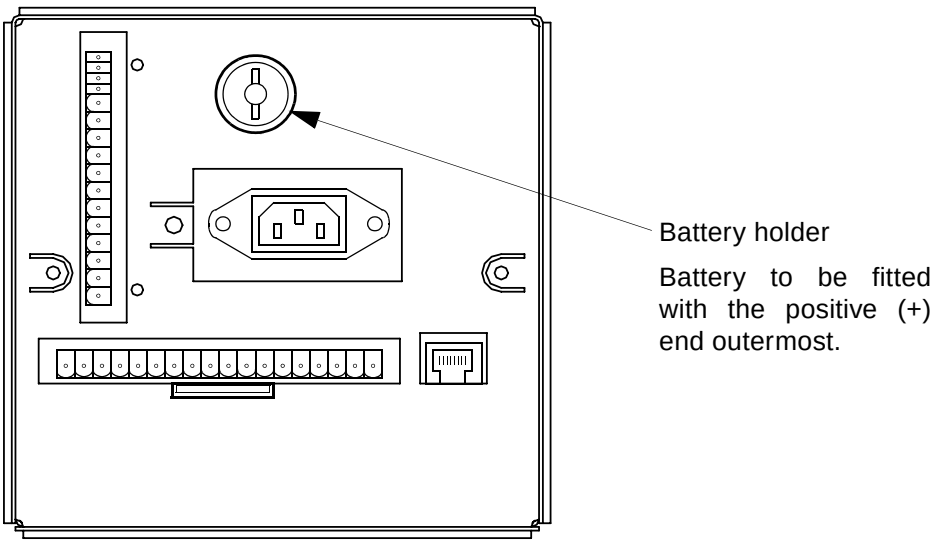

It is advisable to replace the battery when the recorder is powered down, however this is not essential. It is important to observe antistatic precautions and hazardous voltage levels, being aware of wires carrying voltage within the recorder if the power is still on.

The battery holder is located on the rear of the recorder. It has a circular plastic cover that has a "push and twist" method of fitting and removal. The battery will pop up as soon as the cover is removed.

To fit the battery, there is a "+" positive sign stamped on the inside of the battery cover. This is to indicate correct orientation when inserting the battery. The positive end of the battery should be pointing outermost for connection with the inside of the cover. See *Figure 1 on page 84.* Drop the new battery into the slot, place the cover on top and push down to locate with the slots in the unit. Twist the cover a 1/4 turn to secure.

Cleaning Instructions

Switch recorder off prior to cleaning.

Cleaning the unit should be done with a soft lint cloth and warm soapy water. Solvents and prolonged exposure to detergents can cause damage to the front panel. It is recommended that any cloth used for cleaning is damp but NOT wet, to avoid water collecting in the unit.

Disk Drive

CAUTION

AVOID DISK DAMAGE

To avoid damage to disk drive heads, ensure diskette is removed prior to transporting the recorder.

Failure to comply with these instructions may result in product damage.

DO NOT insert any object, other than a 3.5" floppy diskette, or force a diskette into the disk drive. Disks should be removed gently on a parallel plane to the opening of the disk drive. Avoid tilting the disk side to side during removal as it may damage the drive.

If the disk is impeded during ejection from the disk drive, it may jam. DO NOT pull the disk out if there is any resistance. To remove the disk, lift the key pad by depressing a button located in a central position on the underside of the keypad. Pressing this button will release the keypad, lift the keypad flap to reveal the disk drive. The eject button can be found beneath the disk slot, press to eject the disk.

If the disk gets caught in the drive, DO NOT attempt to force it.
Contact **Honeywell**or an authorised agent.

Disk Drive Cleaning

The disk drive in your recorder is a highly reliable component that will give many years of trouble free operation if the following precautions are observed:-

1. Use only high quality diskettes. The recommended pre-formatted 1.44 MByte diskettes from Verbatim, Maxell, Fuji, and Sony.
2. ***Never*** use bulk supply “unbranded” diskettes, or diskettes “badged” by a component wholesale organization. Experience has shown that “unbranded” and “badged” diskettes, whilst often meeting ISO, ECMA, or ANSI standards, do not exhibit the longevity, or performance at temperature, available from diskettes sourced from reputable manufacturers.
3. Every six months (or more often in dusty or harsh environments), use a suitable cleaning diskette on the recording heads.
   - 1.44 Mbyte floppy disk drives - use a "dry" cleaning diskette.

CAUTION

USE CORRECT DISK CLEANING MATERIALS

- Refer to TEAC FD-235HF-7291 Micro Floppy Disk Drive Specification
- Never use “wet” cleaning diskettes on these drives. These are not suitable.

Failure to comply with these instructions may result in product damage.

4. For critical applications, do not continually re-use the same diskette.
5. To minimise the risk of damaged or worn media, replace with new disks every 4 months.
6. Insert and remove diskette only when the “In Use” warning light is off.
7. Only touch the diskette on its cover - ***NEVER*** touch the recording media.
8. Do not place magnets near diskette.
9. Store diskette in a secure area, your data is valuable and you must protect the diskette from extremes of temperature, moisture and dust.
10. Never leave a diskette in the drive for a more than 2 months if not recording.

Cleaning Procedure

The disk drive should be regularly cleaned, at least every six months minimum. Use a suitable cleaning diskette on the recording heads, ie. for the 1.44 Mbyte floppy disk drive - use a ‘dry’ cleaning diskette. More frequent cleaning of the disk drive may be required for more dusty or harsh environments, and is left to the customers discretion.

Backlights

1. At room temperature and maximum brightness, the backlight MTTF is 15,000hrs. min.

MTTF is defined as the time at which 50 % of a batch of backlights remain in excess of half their original brightness i.e. a display has a greater than 50 % chance of being half its original brightness at 15,000 hours old.

2. At extended temperatures these times are reduced.
3. Brightness and contrast control is available on the ***eZtrend V5*** adjusted by two trimpots which can be located on the right hand side of the unit, see *“Case” on page 19*. The trimpot hole nearest the display is for the brightness control and the middle hole is for adjusting the contrast. Reducing backlight brightness will extend backlight life.

Operating Temperature

Operating temperatures are described in *“Specifications” on page 6*. Prolonged operation at temperatures over 50 °C will cause degradation of the display and may lead to other damage.

If the unit has been moved from a cold environment into a warm one, ensure that the unit has reached a minimum temperature of 12 °C or is left to stand for 1 hour at room temperature before applying power, to ensure no condensation remains in the unit.

Front Panel

Care should be taken with the front panel when handling the unit. Sharp and hard objects may pierce the front panel and damage the display. Abrasive materials will damage the front panel.

Calibration

It is recommended that recorder calibration is checked at least every year, or in accordance with your industry regulations, to ensure maximum accuracy. *See “Calibrate Input” on page 40.* For CJC Calibration see *“Appendix H - Calibrate CJC” on page 109*

Appendix A - Quality Approvals

CE Mark

The ***eZtrend V5*** is compliant with Low Voltage Directive 72/23/EEC and amended by 93/68/EEC, and the Electromagnetic Capability Directive 89/336/EEC and amended by 91/263/EEC, 92/31/EEC, 93/68/EEC and 93/97/EEC.

Appendix B - Battery Safety Data Sheet

Safety Guideline

This section is for non-replacement batteries fitted in recorders prior to July 2002. For recorders built after this date, see *"Replaceable Battery Data" on page 91.*

Identification

Type	Inorganic Lithium Battery SL350PT
Typical Capacity (mAh)	1000 mAh
Weight (g)	9g
Chemical System	Li/SoCl2
Voltage	3.6V
Chemistry System	Litium thionyl chloride
Anode	Lithium metal
Cathode	Liquid, thionyl chloride

Composition/Information on Ingredients

⚠ WARNING

HANDLING PRECAUTIONS

The material in this section may only represent a hazard if the integrity of the battery is compromised, or if the battery is pysically or electrically abused.

Failure to comply with these instructions could result in death or serious injury.

Substance	CAS No,	Approx. percent of total weight	Hazard symbol	R-phrases
Lithium metal	7439--93-2	2- 6	F, C	14/15-34
Thionyl Chloride	7719-09-7	18 - 47	C	14-34-37
Aluminium Chloride	7446-7--0	2 - 5		
Lithium Chloride	7447-41-8	1 - 2		
Carbon	7440-44-0	2 - 5		
Steel, Nickel plated	-	35 - 73		

Substance	CAS No,	Approx. percent of total weight	Hazard symbol	R-phrases
Glass	-	0 - 2		
PVC	9002-86-2	0 - 1		
PMMA	9011-14-7	0 - 1		
PTFE	9002-84-0	0 - 1		

Hazard Identification

WARNING

FIRE, EXPLOSION AND SEVERE BURN HAZARD

Do not recharge, disassemble, heat above 100° C, incinerate, or expose contents to water

Failure to comply with these instructions could result in death or serious injury.

First Aid Measures

A) Electrolytic Contact

- Skin - Immediately wash with plenty of water for at least 15 minutes. If symptoms persist after washing, get medical attention.
- Eyes - Immediately flush with plenty of water for at least 15 minutes and get medical attention.
- Respiratory system: With large quantities and irritation of the respiratory tract medical surveillance for 48 hours. Immediately inhale Cortisone Spray.

B) Litium Metal Contact

- Skin Remove particles of lithium from the skin as rapidly as possible. Immediately wash with plenty of water for at lease 15 minutes and get medical attention.
- Eyes Immediately flush with plenty of water for at least 15 minutes and get medical attention.

Fire - fighting measures

A) Extinguishing Media

- Copious amounts of cold water is an effective extinguishing medium for lithium batteries. Do not use warm or hot water.
- Lith-X (Class D extinguishing media) is effective on fires envolving only a few lithium batteries.
- Do not use CO2 or Halon type extinguishers.
- Dry chemical type extinguishers have limited extinguishing potential.

B) Fire Fighting Procedure

- Use a positive self-contained breathing apparatus if batteries are involved in a fire.
- Full protective clothing is necessary
- During water application, caution must be advised as burning pieces of lithium may be ejected from the fire.

Accidental release measures

When the battery housing is damaged, small amounts of electrlyte may leak. Seal battery air tight in a plastic bag, add some chalk (CaCO3) or lime (CaO) powder or Vermiculite. Electrolyte traces may be wiped off using household paper. Rinse with water afterwards.

Handling and Storage

Do not allow terminals to short-circuit

Store preferably in a cool (below 21°C), dry area that is subject to little temperature change.

Do not place near heating equipment, nor expose to direct sunlight for long periods. Elevated temperatures can result in reduced battery life.

Stability and Reactivity

May rupture violently when heated above 145°C or when charged.

Ecological information

The batteries do not contain mercury, cadnium or other heavy metals.

Disposal Considerations

- Dispose by incineration or burial at permitted waste treatment and/or disposal sites.
- Batteries do not contain hazardous materials according to EC directives 91/157/EEC and 98/86/EEC.
- For large quantities a disposal service is offered upon request.

Replaceable Battery Data

For replaceable batteries fitted in recorders after July 2002.

Identification

Recommended manufacturer:

- 3.6V Tadiran Electronic TL5104, USA.
  (order number - batteries x 5 - L005201010/S).

Type	Inorganic Lithium Battery
Typical Capacity (mAh)	2300 mAh

Weight (g)	18g
Chemical System	Li/SoCl2
Voltage	3.6V
Chemistry System	Lithium Thionyl Chloride
Anode	Lithium metal
Cathode	Liquid, Thionyl Chloride

Composition/Information on Ingredients

WARNING

HANDLING PRECAUTIONS

The material in this section may only represent a hazard if the integrity of the battery is compromised, or if the battery is pysically or electrically abused.

Failure to comply with these instructions could result in death or serious injury.

Substance	CAS No,	Approx. percent of total weight	Hazard symbol	R-phrases
Lithium metal	7439--93-2	2- 6	F, C	14/15-34
Thionyl Chloride	7719-09-7	18 - 47	C	14-34-37
Aluminium Chloride	7446-7--0	2 - 5		
Lithium Chloride	7447-41-8	1 - 2		
Carbon	7440-44-0	2 - 5		
Steel, Nickel plated	-	35 - 73		
Glass	-	0 - 2		
PVC	9002-86-2	0 - 1		
PMMA	9011-14-7	0 - 1		
PTFE	9002-84-0	0 - 1		

Hazard Identification and Disposal considerations

WARNING

HAZARDOUS CONTENTS

- Fire, explosion and severe burn hazard. Do not recharge, disassemble, heat above 100°C, incinerate, or expose contents to water.
- Dispose by incineration or burial at permitted waste treatment and/or disposal sites.

Failure to comply with these instructions could result in death or serious injury.

Appendix C -Thermocouple Connections

The different methods for connecting thermocouples according to the type of reference are shown below.

Internal Reference

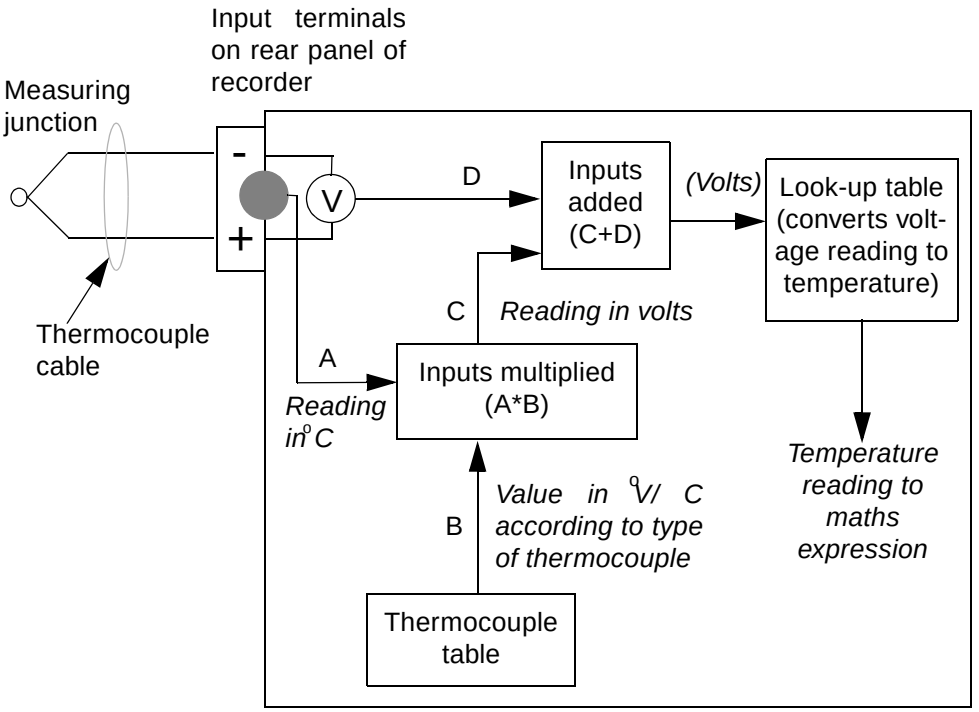

Internal Reference the reference junction is where the thermocouple is connected to the input terminals of the recorder, and the temperature at this junction is being measured by a temperature sensor on the rear panel of the recorder. The reading from this sensor is read off against a value taken from the thermocouple table, which corresponds to the type of thermocouple being used. The corresponding reading in volts for the temperature measured by the sensor is then used as a reference for the reading from the thermocouple.

External Reference @ 0°C

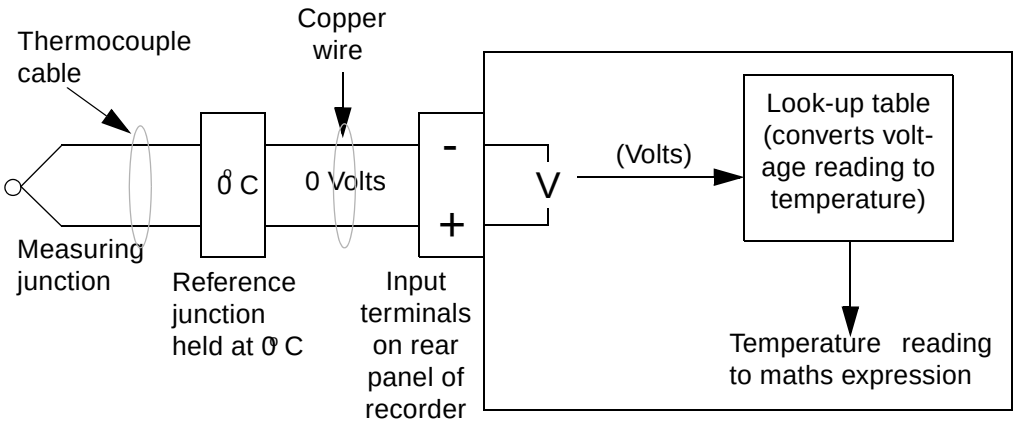

External Reference @ 0°C by keeping the reference junction at 0°C the negative input is acting as a 0 Volt reference so the voltage reading from the thermocouple can be passed directly to the polynomial where the corresponding temperature reading can be found.

External Reference @ Specified Temperature

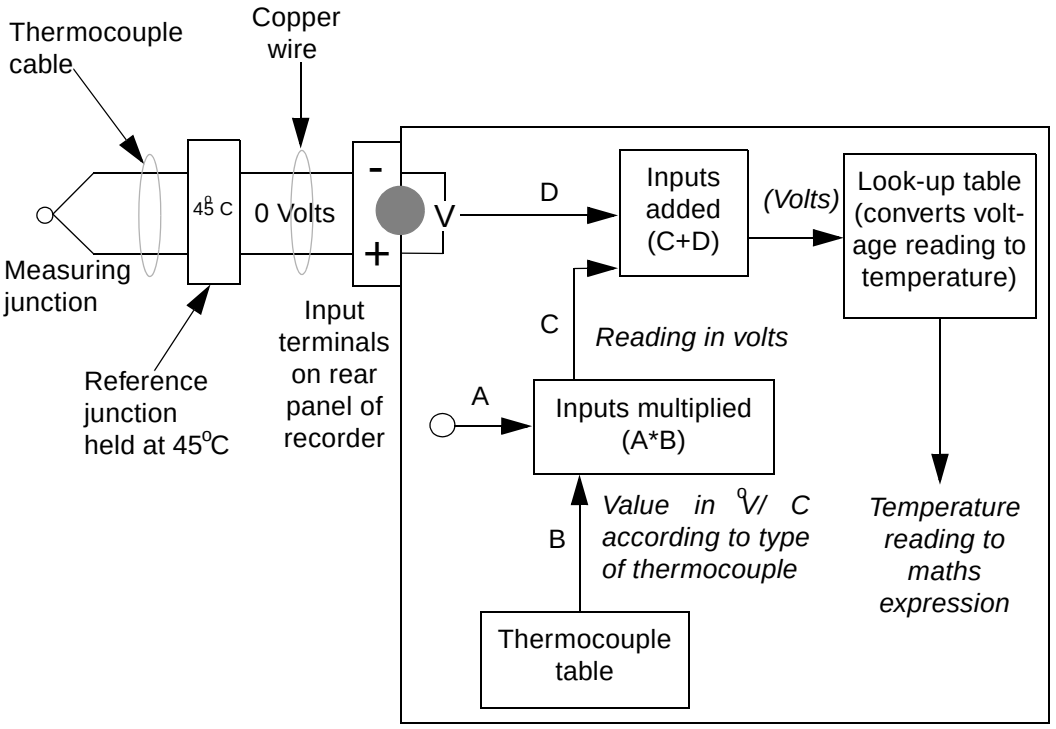

External Reference @ specified temperature if the reference junction can be kept at a constant known temperature other than 0°C this temperature can be specified in the setup menus. This reference temperature is then used in the same way as the reading from the temperature sensor using the ***Internal Reference*** method.

External Input Reference

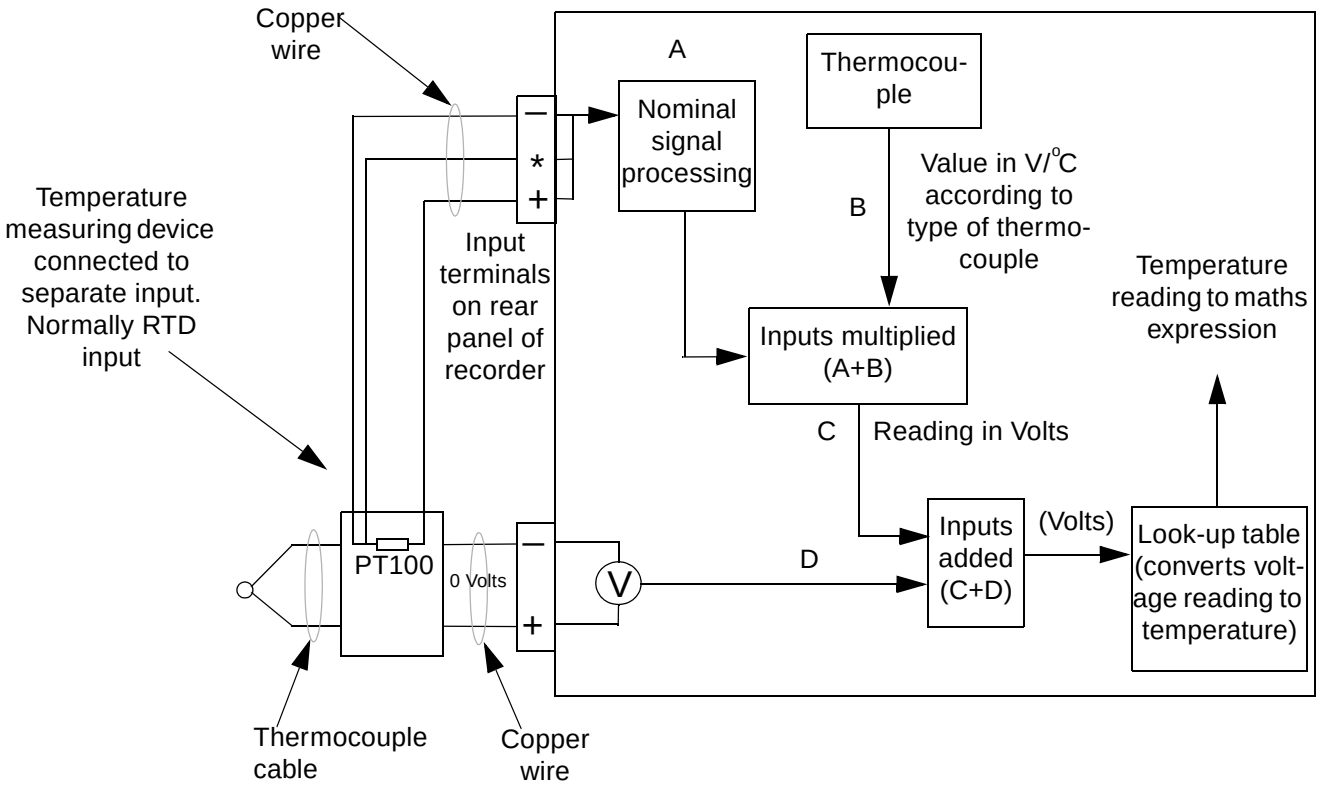

External Input Reference the reference temperature reading in this method is provided by a separate temperature measuring device connected to another input. This input is processed in the normal way and then passed back into the thermocouple signal processing system as a temperature reading.

Appendix D- Maths Expressions

A maths expression is made up of a number of terms. A term is the smallest valid component in a maths expression and can be a variable, operator or function.

An operand may be a constant (i.e. a fixed number) or a ***variable***. The variables that can be used are described below.

In the following examples P1 (Pen 1) equals the result of the maths expression shown in the shaded area. A pen number (P1) will be automatically entered when a pen is selected.

•***An*** - The letter 'A' followed by a number causes the reading taken from an analogue input (denoted by the number) to be inserted in the maths expression. In this example, the readings from Analogue Input 1 are being displayed on Pen 1.

P1= A1

•***In*** - The letter 'I' followed by a number causes the reading taken from a digital input (denoted by the number) to be inserted in the maths expression. In this example, the result of digital input 1 multiplied by digital input 2 is displayed on Pen 9. As digital inputs are read as either 1 or 0, the result of this maths expression will effectively be an AND function (i.e. digital inputs 1 and 2 must both be 1 for the value displayed on Pen 9 to be 1).

P1= I1*I2

•***On*** - The letter 'O' followed by a number causes the state of a Relay output (denoted by the number) to be inserted in the maths expression. A Relay output is read as 1 when active and 0 when inactive.

P1= O1

•These two features on the ***eZtrend V5*** are ***MU*** (Memory use) and ***DU*** (Disk use) gives a percentage reading of Memory space used or Disk space used.

P1= MU

NB. When entering the MU and DU feature using *Trend Manager Pro V5 Suite*, ensure the Complex Variables box is ticked.

The available functions and operators for maths expressions are described below. Where a function and operator have the same effect they are listed together. A ***U*** after the operator denotes a unary operator and a ***B*** denotes a binary operator.

+	**Add Operator + (B)**	**Analogue Input 1 added to Analogue Input 4 displayed on Pen 1**	P1 = A1+A4
-	**Subtract. Operator - (B)**	**Analogue Input 1 subtracted from Analogue 2 displayed on Pen 1**	P1 = A2-A1
*****	**Multiply. Operator * (B)**	**The value of Analogue Input 2 multiplied by two**	P1 = A2*2
/	**Divide. Operator: / (B)**	**Analogue Input 1 divided by Analogue Input 3**	P1 = A1/A3
T	**Assigns the Totalised value of a Pen**	**Pen 1 displays the Total of Pen 2 divided by 10 NB: Do not omit the divider (10), even if it is 1**	P1 = T[2,10]
A	**Indexed Analogue**	**P1 is equal to the indexed analogue input 1+I1 (If I1 = 1, P1 = A2) (If I1= O, P1 = A1)**	P1 = A[1+I1]
I	**Indexed digital input**	**P1 is equal to the indexed digital input of 1 + O1 (If O1 is 1, P1 = I2)**	P1 = I[1+O1]
ABS	**Absolute. Function ABS Operator: & (U)**	**The result of Input 4 subtracted from Input 1 is always considered as positive. If A1 = 2, and A4 = 3.5, the value displayed on Pen 1 would be 1.5 not -1.5.**	P1 = ABS[A1-A4] or P1 = & A1-A4
O	**Indexed relay output**	**P1 is equal to the indexed relay output of 1-A1 (If A1 = O, P1 = O1)**	P1 = O[1-A1]
MODULUS	**Modulus Operator:%(B)**	**The value of Input 2 (A2) is divided by 20 and the remainder ONLY is displayed on Pen 1. The signal will be within 0-19.**	P1 = A2%2O
OVER	**Over**	**If the analogue input 'A1' is greater than '10' then P1 will return the value of A1.**	P1 = OVER[A1,10]

UNDER	**Under**	**If the analogue input 'A1' is less than '10' P1 will return the value of A1.**	P1 = UNDER[A1,10]
HI	**High value. Function: HI**	**Pen 1 displays the highest value out of Input 1 and Input 3.**	P1 = HI[A1,A3]
LO	**Low value. Function: LO**	**Pen 1 displays whichever is the lowest value out of Input 1 and Input 3. Note the inputs being compared are separated by a comma.**	P1 = LO[A1,A3]
CJC	**Cold Junction Compensator**	**P1 displays the value of the CJC 'x' is the board number from 1 to 4**	P1 = CJC[x]
RAV	**Rolling Average. Function: R**	**P1 displays the rolling average of: x = analogue input eg. A1 y = number of samples, Max 500 z = sample interval (ms)**	P1 = RAV[x,y,z]
DELAY	**Delayed value**	**P1 equals the 'Delay' of input A1, number of samples (10), every second (1000 ms)**	**P1 = DELAY[A1,10,1000]**

Maths and Fail Safe

When using output relays in a maths expression be aware the maths is reporting the literal state of the relay.

If Pen 1 (P1) equals output channel 4 (O4) and fail safe is On with no alarm triggered, the relay will be energised and P1 will return 1.

P1= O4

Appendix E - Ethernet & E-mail

Ethernet

Ethernet is a local area network (LAN) technology that transmits information between computers and other devices, at speeds of 10 to 100 million bits per second (Mbps). Each Ethernet equipped device operates independently of all other devices on the network.
All devices attached to an Ethernet are connected to a shared signalling system. Ethernet signals are transmitted serially, one bit at a time, over the shared signal channel attached to each device.

It is up to the high-level protocol that is sending data over the network to make sure that the data is correctly received at the destination device.

Devices attached to an Ethernet can send application data to one another using high-level protocol software, such as TCP/IP protocol suite.

High-level protocols have their own system addresses, such as the 32-bit addresses used in the current version of IP. The high-level IP-based networking software in a device is aware of its own 32-bit IP address and can read the 48-bit Ethernet address of its own network interface, but it doesn't know the Ethernet addresses of the other devices on the network.

To discover the Ethernet addresses of other IP-based devices on the network another high-level protocol is used. For TCP/IP, this is done using a protocol called Address Resolution Protocol (ARP).

Example:

Device X has an IP address of 195.23.37.1 and sends data over the Ethernet channel to another IP-based device, Device Y with IP address 195.23.37.2. Device X sends the packets of information containing an ARP request. The ARP request is asking the device with the IP address of 195.23.37.2 to identify the address of the Ethernet Interface.

Only Device Y with the IP address of 195.23.37.2 will respond, sending a packet with the Ethernet address of device Y back to device X. Now device X and Y have each others Ethernet addresses to which data can be sent.

E-mail

General operation of the e-mail system

The recorder sends messages for distribution by an e-mail server. The e-mail server is located by its IP address as set-up in the communications set-up options. When the recorder sends an e-mail message, it locates the e-mail server and uses SMTP (Simple Message Transfer Protocol) to send the message to the e-mail server. SMTP allows the recorder to send messages to an e-mail server without having its own e-mail address; because of this the e-mail server will not be able to send any reply back to the recorder.

When setting-up the e-mail address list, it is important to include the e-mail administrator address. The Administrator e-mail address is the e-mail address to where the e-mail server will respond in the event of any problems with the delivery of e-mail messages. The Administrator will also appear to be the source of any e-mail messages sent by the recorder. Most e-mail systems require a 'Reply To' address as part of an e-mail message, since the recorder does not have its own e-mail address; it uses the e-mail administrator as the 'Reply To' address.

Any e-mail message will consist of a delivery list (recipients), a subject, and an optional message body. The message body may be omitted for very short messages, or where the message is to be sent to a paging system.

The e-mail subject may be either one of the existing event markers, or one of the two e-mail subjects. The e-mail message body may be either one of the existing event markers, or one of the two e-mail message blocks. Event markers are restricted to 80 characters each. The two e-mail message blocks are restricted to just over 1000 characters each. Both the message subject and body may contain embedded marker tags as used in the event markers.

When the recorder sends an e-mail message that includes a message body, the recorder name, recorder number and the time/date will be appended to the end of the message body text. This is to allow easy identification of when the message was send, and by which recorder.

Any e-mail message is sent as an action within the recorder events system, so anything that can be configured to act as an event cause, may be configured to send an e-mail message. Any e-mail message may be sent to up-to sixteen of the recipients. If the e-mail server supports named groups of e-mail addresses, an e-mail message may be sent to a combination of e-mail addresses and e-mail group.

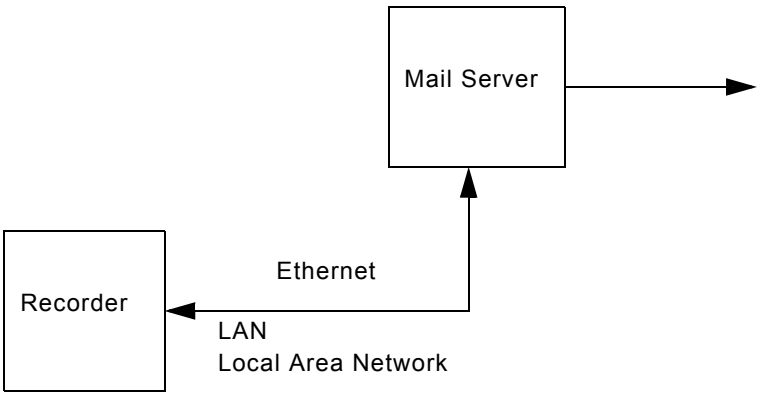

Appendix F- Fuzzy Logging

What is Fuzzy Logging?

Fuzzy Logging is a real time Data Compression technique, *Patent-applied-for* and developed at **Honeywell** as an alternative to the more standard methods of recording data.

Paperless Recorders are primarily used for exception recording. They spend most of their life trending and recording straight lines. Fuzzy Logging has been developed to improve the efficiency of data storage, and is particularly effective in exception recording examples where normal operation consists of generally static inputs.

Fuzzy Logging looks for straight lines in the data stream, in real time, whether they are horizontal, climbing or descending. A straight line made up of say 10 points can be equally well represented by 2 points, one at either end, the other 8 points are redundant. Fuzzy logging works by creating straight lines in the data and discarding redundant points.

What's it for?

…… To help the user in the trade off between **Scan Rate**, **Disk capacity** and **Recording Time,** after all the 'Pie' is only so big.

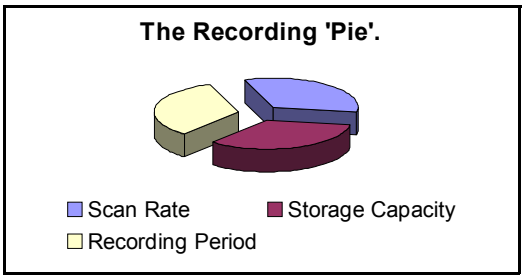

Fuzzy Logging has been developed to help maximise all three sections, in effect increasing the size of the 'Pie'.

The result is a technique that delivers a host of real world benefits over the more traditional recording methods.

1. Disks take longer to fill – changed less frequently, less site visits.
2. Faster scan rates can be used for any given disk size – giving greater resolution on the process.
3. Recording time can be extended.
4. Less hard disk memory required for archiving on the PC.
5. Quicker graphing of data.
6. Smaller data files for remote collection.

OK. How does it work?

Fuzzy Logging does not log data points that form part of a straight line.

The technique is best illustrated by the diagram below:

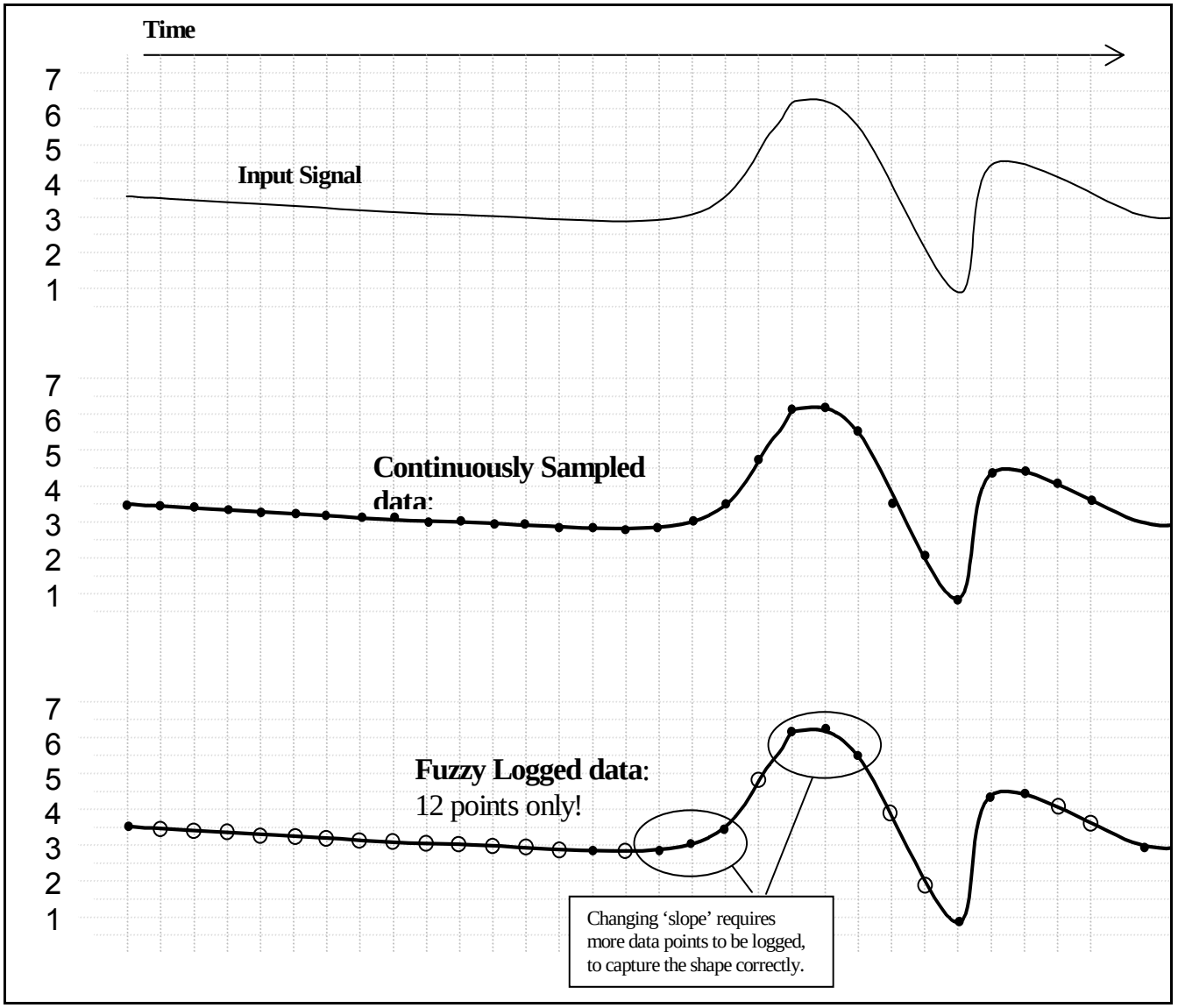

Diagram 1

Points marked: ○ are **NOT** logged, as they lie on an 'imaginary' straight line between points marked:

The graph of the Fuzzy Logged data, looks identical to the graph of the sampled data, but has taken ***less than half the points*** to build it.

Sounds Great! But what about ‘Spikes’ on my trend line? Won’t it miss them?

NO, you will not miss any ‘Spikes’, ‘Glitches’ or ‘Transients’ – these are what you need to see!

As Fuzzy Logging is an adaptive technique, it will log as fast as it needs to in order to capture everything.

Although not all points are logged, the base ‘Scan Rate’ of the input is the same as if you were using a standard logging technique.

OK, but what about slowly drifting inputs?

Again – **No Problem**. The algorithm is processed in ‘Real Time’, i.e. as the reading is taken. As it already knows the previous logged readings it can calculate where the next point should be (assuming it’s on a straight line) – if the measured value does not equal the predicted value, the point is logged as it no longer forms part of the straight line.

Fuzzy Logging, looks for straight lines – ***at any angle.*** Not just on the horizontal.

I’m convinced. Do you have any examples?

Example 1.) Flow & Pressure Measurement of Mains Water Pressure

A recorder was installed, to monitor the flow of a mains water supply. At peak demand the mains pressure had been subject to sharp drops in pressure and flow rate, and it was necessary to find the cause of the problem.

- The recorder had to have a fast scan rate, in order to capture the ‘glitches’.
- The recording period would be over many days if not weeks, so storage capacity was at a premium.

A fast scan rate using the standard sampling method would result in a disk life of about a day, which was not acceptable.

As this application consists of long periods of little activity (relatively constant flow rate), and short periods of high activity (rapidly changing flow rate), it is ideally suited to Fuzzy Logging.

During the hours of stable flow where the flow rate remained more or less constant, the Fuzzy Logging technique would give compression ratios up to 100 times. However, as soon as a glitch appeared the fast sampling rate was able to capture and store all the points.

Example 2.) Cold Storage Temperature Measurement

A recorder was required to help track random and rapid temperature changes within the cold storage rooms. Conventional sample recording had shown that temperature variations were present, but was not of high enough resolution to pinpoint the cause.

Again as in example 1), the measured inputs would show long periods of stable constant readings, interspersed with small sharp increases in temperature. In order to track the cause of these variations, it was necessary to maximise the time resolution of the data. This application was ideally suited to the Fuzzy Logging data storage technique, as the periods of inactivity would result in compression rates of over 50 times.

Example 3.) Logged Data Example

The diagram below is a sample of actual logged data in both the Fuzzy Logging method (top) and Sample Logging method (bottom), derived from the same analogue input.

It provides an excellent illustration of how less data points can be used to construct an identical trace.

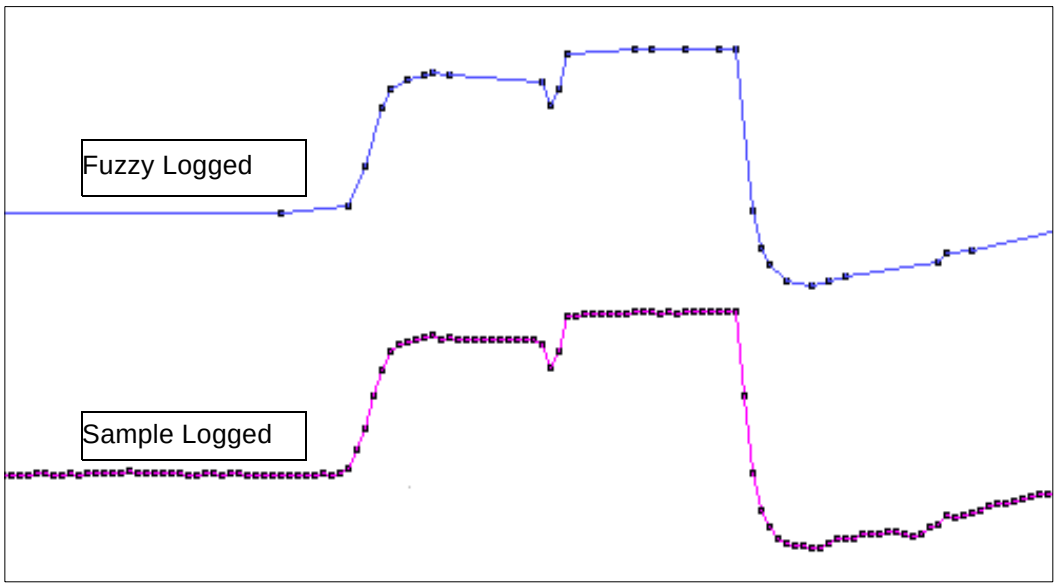

Diagram 2.

NB. This data extract was taken from a 56 hour temperature run, which resulted in approximately 1Mbyte of sample data, and approximately 40 Kbyte of Fuzzy Logged data.

A compression ratio of 25 times!!

Anything else it can do?

Yes! Fuzzy Logging can be used as a **'One Hit'** recording button.

In applications where the measured process is new or the ideal scan rate is unknown Fuzzy Logging is ideal, as it adapts the log rate to the input signal, and can therefore find the optimum logging rate for you.

Appendix G - F sub 0 Sterilisation

The significance of F0

The F0 value is used in the pharmaceutical and related industries in the sterilisation of items. A paper on the method is available at http://www.fedegari.com/protech/protech.htm, but a brief summary is included here to give the essence of the meaning of the terms used.

When items are subjected to sterilisation by heating, the rate at which micro-organisms are killed is dependent on the temperature.

Traditionally items were sterilised by holding them at 250 ºF (= 121.11 ºC), and the F0 value for a sterilisation is simply the equivalent time at this temperature that would produce the same effect. For many "average" micro-organisms each minute at 121.11 ºC reduces the number present by a factor of 10, so a 15-minute hold at this temperature would reduce the number by a factor of 10^{15}.

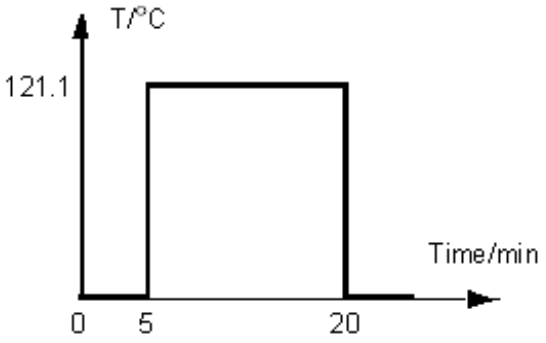

Figure 1

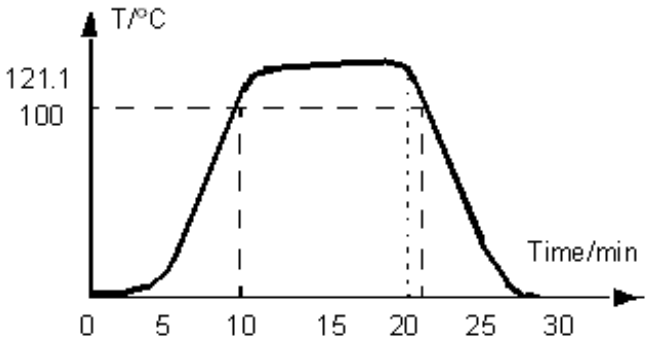

Figure 2

If it were possible to heat a sample from ambient to 121.11 ºC in 1 second, hold it there for 15 minutes, and then cool it back to ambient in 1 second, the temperature / time profile would look something like the trace in *Figure 1 on page 107* and the F0 value would be 15, representing 15 minutes at 121.11 ºC.

In practice, of course, to reach this temperature the object would have to be subject to an initial heating period up to that temperature, and later a cooling period back down again to ambient temperature, more like the profile shown in *Figure 2 on page 107*. During all this heating up, holding at temperature, and subsequent cooling, micro-organisms will be being killed at different rates, and the F0 value is calculated by summing the effect at each temperature (provided it is over some defined starting temperature - see below).

This calculation is performed by using the expression, where T is the temperature in ºC and Δt (Delta T) is the time spent at that temperature. The z factor that appears in this equation is the temperature coefficient for the destruction of micro-organisms, and is the increase in temperature, in ºC, that produces a 10-fold increase in sterilisation rate.

$$F0 = \Delta t \sum 10^{\frac{T - 121.11}{z}}$$

This summation is only performed once the sample temperature has reached some specified starting temperature. For example in *Figure 2 on page 107* if this starting temperature has been set to 100 ºC (a common value) then the F_0 summation would begin at t = 8 minutes when the temperature first reaches this value.

Because of this small, but increasing contribution to F0 once T reaches 100 ºC, and the fact that in this trace the temperature exceeds 121.1 ºC, the F0 value reaches 15 at time t = 20 minutes, at which point the sterilisation is complete, and cooling begins.

For some applications it is allowed to report the F_0 value that is finally achieved as the sample cools back to the start temperature, in this example 100 ºC, and so the contribution under the curve up to t = 22 minutes would be included in the reported F0. The final F_0 value might then be 16.1, say, with 15 having been achieved up to t = 20 minutes, and the extra 1.1 having accumulated during the cooling back to 100 ºC between t = 20 minutes and t = 22 minutes.

The terms used in setting up the F0 totaliser, together with their default values, are summarised in this table.

Term	Definition	Default values	Allowed Range
F0	The equivalent time in minutes at 121.11 ºC that would produce the same degree of sterilisation	15	1 - 999
z factor	The temperature increase in ºC that will produce a 10-fold increase in the rate of sterilisation	10	5 - 20
Start temperature	The temperature in ºC above which the contributions to F0 can be counted	100	90 - 120
Include cooling phase	If TRUE, contributions to F0 can be included after the target value has been reached and while the temperature is still above the start temperature. If FALSE, these contributions are not included	FALSE	-

Appendix H - Calibrate CJC

Calibrate CJC - RT Sensor

The diagram below shows how to wire an R/T across the first channel to measure the temperature of the terminal. This must be done on the first channel of the Analogue card. For this calibration ensure channel 1 is enabled as a Resistance Thermometer and any other channel for the Type K Thermocouple.

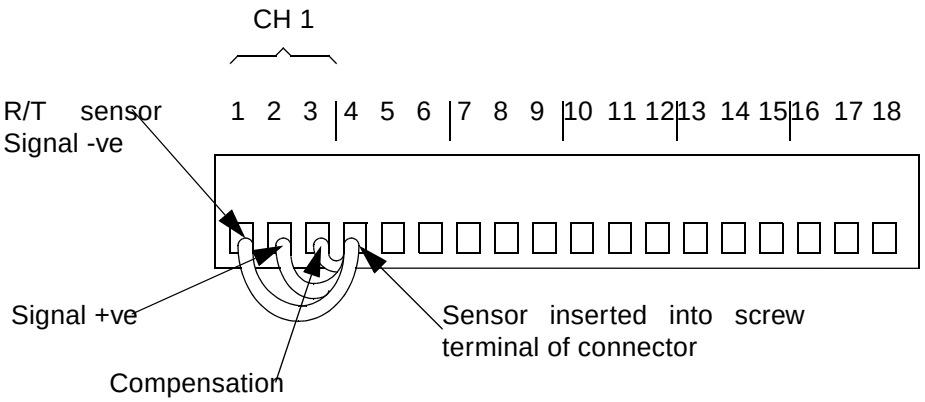

Calibrate CJC - Setup

Ensure the Resistance Thermometer (R/T) sensor is fitted for channel 1.

Set up the ***Analogue In*** menus to display ***Resistance Thermometer*** on Analogue Input channel A1, and ***Thermocouple*** on another Analogue Input channel, eg. A2. Most standard RTs are type PT100, please check the specifications of the recorder to match with the R/T sensor being used in the terminal block.

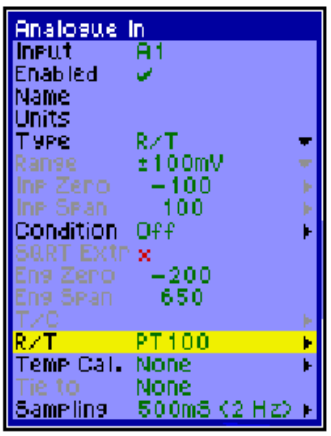

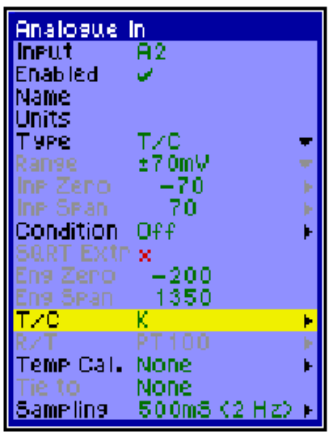

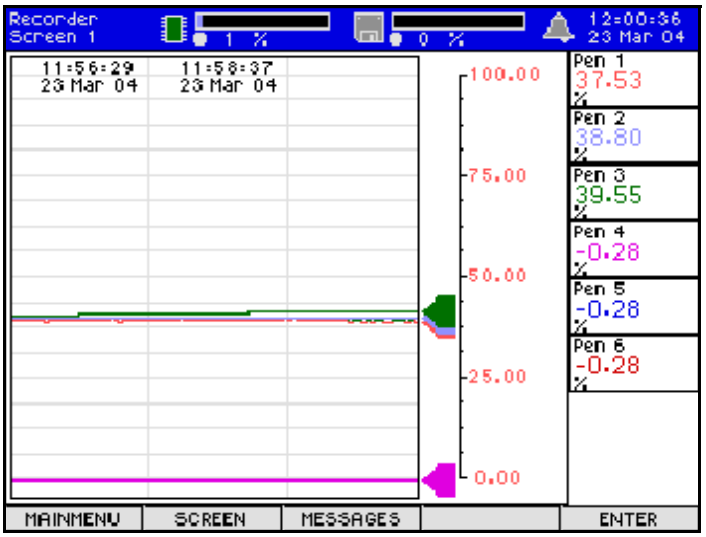

The chart shows the R/T reading on Pen 1 and the T/C measurement on Pen 2. Pen 3 is displaying the CJC value

NOTICE

Allow the temperatures to settle, if the recorder is cold leave it for at least 30 minutes, ideally 1 hour. When the two lines become flat on the chart then calibration can take place.

Display CJC value

Recorders with the Math option available.

To display the internal value of the CJC a channel must be setup in the recorder to measure the temperature. MAINMENU, Setup, Edit...

- From the ***Analogue In*** menu select a spare channel and set the Type to ***T/C*** - FINISH and APPLY

Pen Setup

Set up a spare pen to read the Thermocouple on the Analogue Input channel. eg. Set Pen 2 to display A2.

- From the ***Pens*** menu set up a pen to display the temperature measurement of the CJC sensor. Select a spare pen, (not a pen being used to display the RT or TC measurements) and go to ***Maths*** on the menu. Enter the expression **CJC[1]**,

The Pen that has been setup with the CJC [1] maths expression will now display the temperature of the CJC.

Note: If the Math option is not available, short out the + & - on the Thermocouple input in the terminal block and set up a Pen to display the CJC value.

.

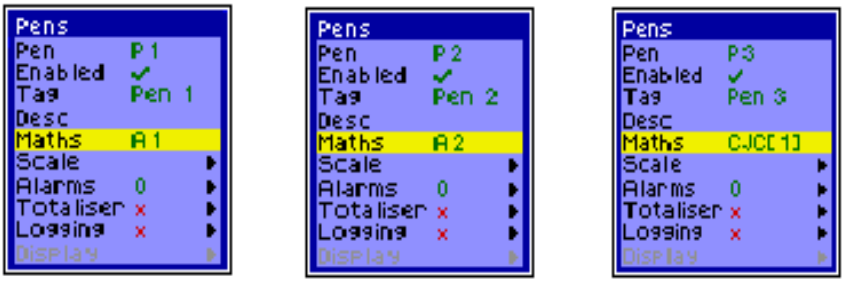

In this example Pen 1 is displaying the R/T value, Pen 2 the T/C value and Pen 3 the CJC value

Messages Screen

Before Calibration the messages screen will display “Slot A CJC cal -4.00 deg C (NC)”, ***this should be ignored***. Do not apply a -4.00°C offset to any CJC values. (NC = Not Calibrated).

After Calibration this message will read the correct offset between the temperature of the R/T and the CJC. The value of the CJC is calculated to include the offset each time the recorder is calibrated thereafter.

.

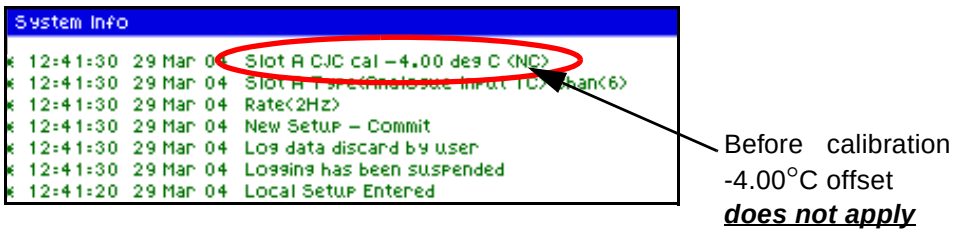

Perform CJC Calibration

The recorder internally takes a temperature reading of the CJC sensor at the rear of the unit. Follow the menu options and select ***Calibrate***, which takes only a few seconds. The CJC value in the messages screen will change to display the new offset value after the calibration.

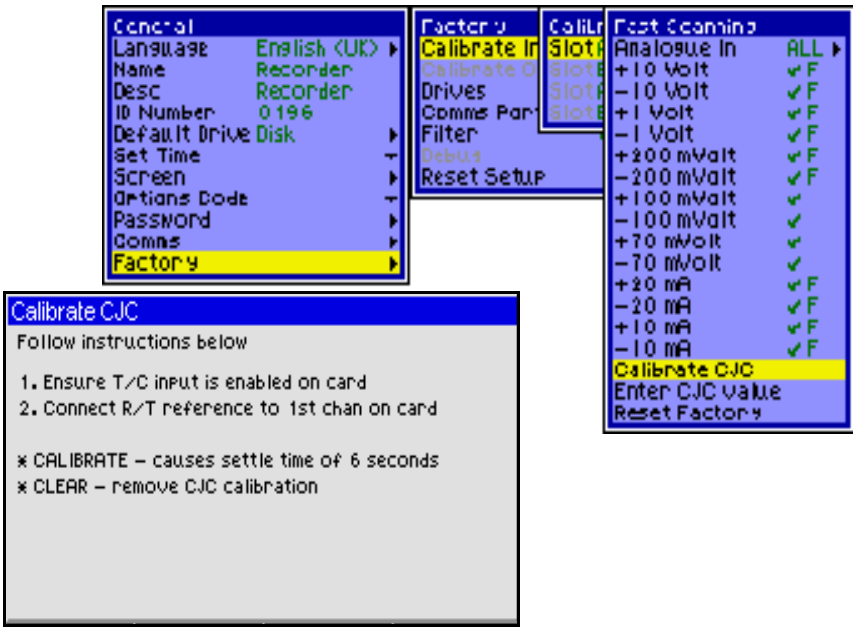

Calibration offset

The Calibration process is taking the temperature measurement of the R/T in the terminal block. The offset in the messages screen will be adjusted to show the difference between the R/T reading and the CJC reading.

In our example:

The R/T is displayed on Pen 1 = 37.5°C,

The CJC value is displayed on Pen 3 = 39.5°C.

After Calibration

The R/T is displayed on Pen 1 = 37.5°C,

The CJC value is displayed on Pen 3 = 37.5°C.

After Calibration the offset in the messages screen = -2.00°C.

This means the actual CJC value is 39.5 which includes the -2.00°C offset

Clear Calibration settings

The ***Clear*** option in the calibrate CJC box removes any calibration and CJC value adjustments. The messages screen will default to read “Slot A CJC cal -4.00 deg C (NC)”, this should be ignored.

CJC Adjustment Value

After calibration the CJC value can be changed, if required, by manually entering the CJC value. The CJC value can be set to anything other than the calibrated value. This is an optional adjustment factor to set the CJC value to a specifically required temperature.

From the MAINMENU button go to Setup, Edit, General, Factory, ***Calibrate Input***.and select the appropriate slot.

- Select “Enter CJC Value” from the menu and a text box will appear. The CJC temperature must be entered in °C.
- When complete, select ACCEPT, FINISH and APPLY to complete the entry.

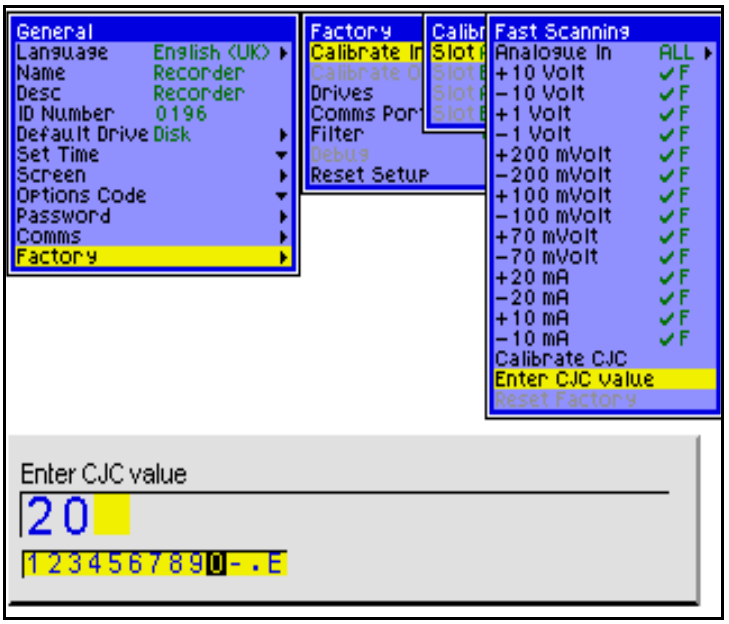

The difference between the recorder reading of the CJC value and the manually entered CJC value is added to the offset. The offset is stored in the recorder so any further Thermocouple measurements will incorporate the offset. The offset can be viewed on the Messages screen.

Example: Pen 3 displays the CJC at 37.5°C, after calibration there is an offset value of -2.00°C, so for the actual CJC value add on the offset -2.00°C = 39.5°C.

A new CJC value is manually entered at 30°C, the offset changes to read 9.5°C in the messages screen. This is the CJC value of 37.5°C minus the manually entered figure of 30°C = 7.5°C, plus the offset of -2.00°C = 9.5°C

Remove CJC Calibration

From the menu select the ***Calibrate CJC*** option. Then select the ***CLEAR*** option from the menu bar using the keypad button. This will remove CJC calibration from a calibrated recorder.

Reset Factory

This function resets the board calibration for all channels and ranges back to factory default. This does not reset the CJC.

Index

24Vdc Plug Connection instructions 19
4 channel relay O/P card 21
6 channel relay O/P+2 digital I/P 21

A

AC Power 18
About 30
Alarm Digital
Log Digital 68
Alarm cards 21
4 channel relay O/P card 21
6 channel relay O/P+2 digital I/P card 21
Alarm channel As Input 67
Alarm channel As Output 68
Alarms 57
Damping 60
Delete 58
Edit 58
Hysteresis 59
Log Alarm 59
New 58
Relay Enable 59
Analogue In
Setup 43
Analogue card 20
Appendix A, Quality Approvals 87
Appendix B
Battery Safety Data Sheet 89
Appendix C
Thermocouple Connections 93
Appendix D
Maths Expression 97
Maths and Fail Safe 98
Appendix E
Ethernet & E-mail 101
Appendix F
Fuzzy Logging 103
Appendix G
F sub 0 (sterilisation) 107
Appendix H
Calibrate CJC 109

B

Backlights 86
Battery 15
Battery Fitting 84
Battery Function 15
Battery Life 83
Battery Replacement 83
Battery Safety
Data Sheet 89
Guideline 89
Battery switch 19
Brightness control 19

C

CE Mark 87
CJC Adjustment Value 113
Cables 2
Calibrate CJC
Appendix H 109
CJC Adjustment Value 113
Calibration Offset 112
Clear Calibration settings 112
Display value 110
Perform Calibration 111
RT Sensor 109
Remove CJC Calibration 113
Reset Factory 113
Setup 109

Calibrate Input 40
Calibration check 86
Case 19
Battery switch 19
Brightness control 19
Contrast control 19
Change Password 75
Chart Colour 34
Cleaning Instructions 85
Comms
Default Gateway 38
E-mail 39
Ethernet 38
IP Address 38
IP Resolution 38
Protocol 39
Sockets 39
Subnet Mask 39
Comms Ports
Ethernet 41
MAC address 41
Contrast control 19

D

Damping, Alarms 60
Device, Log to 66
Digital filter 52
Directional Key 23
Disk Drive 85
Cleaning 85
Display CJC value 110
Display Trimpot Adjustments 19
Displaying Totals 64
Downscale burnout 50

E

Edit, Setup 31
Electrical 18
Cables 18
Engineering Units
Tie to 51
Engineering Zero and Span 48
Ethernet & E-mail
Appendix E 101
Ethernet configuration 38
Ethernet interface 22
Events List 27

F

F sub 0 (sterilisation)
Appendix G 107
Totaliser Pens 61
Factory
Calibrate Input 40
Factory, Setup 40
Fail Safe and Maths 68
Front Panel 86
Fuses 1
Fuzzy Logging
Appendix F 103
How does it work? 104
What's it for? 103

G

General Menu 32
Generic Totaliser 62

H

Hysteresis 59

I

ID Number
Recorder 33
Input
Name 44
Range 44
Sampling 52
Span 45
Thermocouple 49
Type 44
Units 44
Zero 45
Installation 15
AC Power 18
Alarm Cards 21
Analogue card 20
Ethernet Interface 22
Instrument Care 83
Backlights 86
Battery Fitting 84

Battery Life 83
Battery Replacement 83
Calibration check 86
Cleaning Instructions 85
Disk Drive
Cleaning 85
Front Panel 86
Operating Temperature 86

K

Keypad 23

L

Layout
Data display evaluation 78
Screen 77
Selecting and Re-naming Screens 77
Layout Setup
Pen Scale 78
Load setups from disk 70
Log Alarm 59
Log to Disk 71
Logarithmic Scale 56
Logging
Device 66
Method 65
Pens 64
Rate 66
Type 65

M

MAC address 41
Main Features 9
Maintenance 3
Mark on chart 26
Maths Expression
Maths and Fail Safe 98
Maths Expressions,
Appendix D 97
Mechanical 16
Panel Cut-out 16
Panel Mounting 17
Menu Selection 29
Messages Screen 27
MinMax Reset 26

N

Name
Recorder 32
New Alarm 58
Non-Volatile Screen Display 28

O

Operating Temperature 86
Options Code
Recorder 34

P

Password 34
Allocation 36
Change 37
Enable 35
Eng Password Entry 35
Load 37
Protect 35
Reset 37
Save 37
Traceability 37
User Password Entry 37
Password, Change 75
Pen
Description 54
Maths Expression 54
Scales 54
Tag 53
Pen Scale Displayed on the Screen 78
Pen Setup
Alarms 57
Pens Setup 53
Totaliser 60
Power Up 28

Q

Quality
CE Mark 87

R

Real-time Visuals 10
- Alarm Indicators 12
- Bar 11
- Digital 11
- Pen Pointers 12
- Status bar 10
- Trend 13
- Units and Scale 13

Recorder
- ID Number 33
- Name 32
- Options Code 34
- Set Time 33

Recording 71
- Enabled 71
- Log to Disk 71
- Validate Disk 72

Reference Junction 49
Relay Enable 59
Relay/Digital 67
Repairs 3
Replaceable Battery Data 91
Replay Mode 26
Reset Setup 41
Resistance Thermometer 50

S

Safety 1
Sampling speeds 52
Save setups to disk 70
Scale 54
- Divisions 56
- Factor 55
- Format 55
- Units 55

Scales
- Logarithmic 56

Screen 23
Screen Displays 25
Screen Layouts 24
Screen Saver 34
Set Date 33
Set Time
- Recorder 33

Setup Complete 69
Setup recorder 31
Setups
- Load 70
- Save 70

Signal conditioning 46
- Damping 46
- Transient Filter 46

Software 79
- System Requirements 81

Software License/Warrenty 79
Specifications 6
- Analogue Input card performance 7

Square Root Extraction 47
Start-up Condition table 10
Status Bar layout 24
Storage Media 5
System Requirements
- Software 81

T

Temperature Calibration 50
Text Entry 29
Thermocouple Connections
- Appendix C 93
- External Input Reference 95
- External Reference 94
- Internal Reference 93

Thermocouple Input 49
Tie to
- Engineering Units 51

Totaliser
- Displaying Totals 64

Totaliser Pens 60
- F sub 0 (sterilisation) 61
- Gerneric Totaliser 62

Totals 73
- Reset All Totals 73
- Start All Totals 73
- Stop All Totals 73

U

Unpacking 15
Upscale Burn 50

V,W,X,Y,Z

Validate Disk 72
Vutronik Adapter Installation 42
Warnings and Safety Precautions 2

This page has intentionally been left blank

Sales and Service

For application assistance, current specifications, pricing, or name of the nearest Authorized Distributor, contact one of the offices below.

Warranty/Remedy

Honeywell warrants goods of its manufacture as being free of defective materials and faulty workmanship. Contact your local sales office for warranty information. If warranted goods are returned to Honeywell during the period of coverage, Honeywell will repair or replace without charge those items it finds defective. The foregoing is Buyer's sole remedy and is in lieu of all other warranties, expressed or implied, including those of merchantability and fitness for a particular purpose. Specifications may change without notice. The information we supply is believed to be accurate and reliable as of printing. However, we assume no responsibility for its use. While we provide application assistance personally, through our literature and the Honeywell website, it is up to the customer to determine the suitability of the product in the application.

©Copyright 2001-2004 Honeywell International Inc.

ASIA PACIFIC

Control Products
Asia Pacific Headquarters
Phone: +(65) 6355-2828
Fax: +(65) 6445-3033

Australia
Honeywell Limited
Phone: +(61) 2-9370-4500
FAX: +(61) 2-9370-4525
Toll Free 1300-36-39-36
Toll Free Fax: 1300-36-04-70

China – PRC - Beijing
Honeywell China Inc.
Phone: +(86-10) 8458-3280
Fax: +(86-10) 8458-3102

China – PRC - Shanghai
Honeywell China Inc.
Phone: (86-21) 6237-0237
Fax: (86-21) 6237-1237

China - Hong Kong S.A.R.
Honeywell Ltd.
Phone: +(852) 2953-6412
Fax: +(852) 2953-6767

China – PRC - Chengdu
Honeywell China Inc.
Phone: +(86-28) 6786-348
Fax: +(86-28) 6787-061

China – PRC - Guangzhou
Honeywell China Inc.
Phone: +(86-20) 3879-1169
Fax: +(86-20) 3879-1269

China – PRC - Shenzhen-
Honeywell China Inc.
Phone: +(86) 755-518-1226
Fax: +(86) 755-518-1221

Indonesia
Honeywell Indonesia Pte Ltd.
Phone: +(62) 21-535-8833
FAX: +(62) 21-5367 1008

IndiaTATA
Honeywell Ltd.
Phone:+(91)20687 0445/ 0446
Fax: +(91) 20681 2243/ 687 5992

Japan
Honeywell Inc
Phone: +(81) 3 5440 1425
Fax: +(81) 3 5440 1368

South Korea
Honeywell Korea Co Ltd
Phone: +(822) 799-6167
Fax: +(822) 792-9013

Malaysia
Honeywell Engineering Sdn Bhd
Phone: +(60-3) 7958-4988
Fax: +(60-3) 7958-8922

New Zealand
Honeywell Limited
Phone: +(64-9) 623-5050
Fax: +(64-9) 623-5060
Toll Free (0800) 202-088

Philippines
Honeywell Systems (Philippines) Inc.
Phone: +(63-2) 636-1661 / 1662
Fax: +(63-2) 638-4013

Singapore
Honeywell South East Asia
Phone: +(65) 6355-2828
Fax: +(65) 6445-3033

Thailand
Honeywell Systems (Thailand) Ltd.
Phone: +(662) 693-3099
FAX: +(662) 693-3085

Taiwan R.O.C.
Honeywell Taiwan Ltd.
Phone: +(886-2) 2245-1000
FAX: +(886-2) 2245-3242

EUROPE

Austria
Honeywell Austria GmbH
Phone: +43 (316)400123
FAX: +43 (316)40017

Belgium
Honeywell SA/NV
Phone: +31(0)205656999
FAX: +31(0)165330746

Bulgaria
Honeywell EOOD
Phone: +(359) 2 79 40 27
FAX: +(359) 2 79 40 90

Czech Republic
Honeywell spol. s.r.o.
Phone: +420-54324-5014
FAX: +420-54324-5011

Denmark
Honeywell A/S
Phone: +(45) 39 55 55 55
FAX: +(45) 39 55 55 58

Finland
Honeywell OY
Phone: +358 (3) 2727625
FAX: +358 (3) 2728600

France
Honeywell SA
Phone: +33 (0)1 60198075
FAX: +33 (0)1 60198201

Germany
Honeywell AG
Phone: +49 (69)8064336
FAX: +49 (69)806497336

Hungary
Honeywell Kft.
Phone: +36-1-451 4335
FAX: +36-1-451 4343

Italy
Honeywell S.p.A.
Phone: +39 02 9214 6503
FAX: +39 0292146377The

Netherlands
Honeywell B.V.
Phone: +31(0)205656999
FAX: +31(0)165330746

Norway
Honeywell A/S
Phone: (45) 39 55 55 55

Poland
Honeywell Sp. zo.o
Phone: +48-22-6060900
FAX: +48-22-6060901

Portugal
Honeywell Portugal Lda
Phone: +351 21 424 5000
FAX: +351 21 424 50 99

Romania
Honeywell Bucharest
Phone: 40212110076
FAX: +40 (40212103375)

Commonwealth of Independent States (CIS)
Z.A.O. Honeywell
Phone: +(7 095) 796 98 36
FAX: +(7 095) 796 98 93

Slovak Republic
Honeywell s.r.o.
Phone: +421-2-58247 410
FAX: +421-2-58247 415

Spain
Honeywell S.A.
Phone: +34 (0)91313 61 00
FAX: +34 (0)91313 61 30

Sweden
Honeywell AB
Phone: +(46) 8 775 55 00
FAX: +(46) 8 775 56 00

Switzerland
Honeywell AG
Phone: +41 18552448
FAX: +(41) 1 855 24 45

Turkey
Honeywell Turkey A.S.
Phone: +90 216 575 6600
FAX: +90 216 575 6637

United Kingdom
Honeywell Control Systems Ltd
Phone: +(44) 1698 481730
FAX: +(44) 1698 481276

MIDDLE EAST

Abu Dhabi U A E
Middle East Headquarters
Honeywell Middle East Ltd
Phone: +971 2 4041220
FAX: +971 2 4432536

Sultanate of Oman
Honeywell & Co Oman LLC
Phone: +968 701397
FAX +968 787351

Egypt
Honeywell Egypt Ltd
Phone: +202 4514460 /1/ 2/ 3/ 4/ 5/ 6
FAX : +2024514467

Saudia Arabia
Honeywell Turki Arabia Limited
Phone: +966-3-341-0140
Fax: +966-3-341-0216

Kuwait
Honeywell Kuwait KSC
Phone: +965 2421327

AFRICA

Mediterranean & African Distributors
Honeywell SpA
Phone: +39 (02) 250 10 604
FAX: +39 (02) 250 10 659

South Africa (Republic of)
Honeywell Southern Africa
Honeywell S.A. Pty. Ltd
Phone: +27 11 6958000
FAX +27 118051504

NORTH AMERICA

Canada
Honeywell LTD
Phone: 1-800-737-3360
FAX: 1-800-565-4130

USA
Honeywell Control Products,
Phone: 1-800-537-6945
1-815-235-6847
FAX: 1-815-235-6545

LATIN AMERICA

Argentina
Honeywell S.A.I.C.
Phone: +(54-11) 4383-3637
FAX: +(54-11) 4325-6470

Brazil
Honeywell do Brasil & Cia
Phone: +(55-11) 7266-1900
FAX: +(55-11) 7266-1905

Chile
Honeywell Chile, S.A.
Phone: +(56-2) 233-0688
FAX: +(56-2) 231-6679

Mexico
Honeywell S.A. de C.V.
Phone: +(52) 55 5259-1966
FAX: +(52) 55 5570-2985

Puerto Rico
Honeywell Inc.
Phone: +(809) 792-7075
FAX: +(809) 792-0053

Trinidad
Honeywell Inc
Phone: +(868) 624-3964
FAX: +(868) 624-3969

Venezuela
Honeywell CA
Phone: +(58-2) 238-0211
FAX: +(58-2) 238-3391

Honeywell

Honeywell Process Solutions
2500 W. Union Hills Drive
Phoenix, AZ 85027
www.honeywell.com/imc

43-TV-25-05 GLO Issue 4 06/04 UK

HEAT EXCHANGER MOTOR

LEESON

MODEL # C6T17FB151B

LEESON Electric Corporation
1051 Cheyenne Avenue
Grafton, WI 53024
E-Mail: sales@leeson.com • **Web site:** www.leeson.com

Item # 116757.00, AC Three Phase Totally Enclosed Motors
List Price $762.00

1HP..1760/1450RPM.56.TEFC.208-230/460V.3PH.60/50HZ.CONT.AUTOMATIC.40C.1.25/1.25SF.RIGID.WATTSAVER.C6T17FB151B

Features / Advantages / Benefits · Application and Uses · Specifications

Features / Advantages / Benefits

- Standard, EPACT and Premium efficient ratings
- Inverter-rated
- Shielded ball bearings for direct coupled applications
- Continuous duty
- Dynamically balanced rotors Torques exceed NEMA Performance standards
- UL recognized and CSA certified

Application and Uses

- For use where exposure to water, dust and corrosives exists. Ideally suited for use on pumps, compressors, fans, blowers, conveyors, machine tools and other industrial applications

Specifications

Motor Type	TF
Horsepower	1 hp 0.75 kW
RPM (60 Hz)	1760 RPM
RPM (50 Hz)	1450 RPM
HP1 - Horsepower (60 Hz)	1 hp
HP2 - Horsepower (50 Hz)	1 hp
Phase	3
Frequency	60/50 Hz
Voltage for 60 Hz	208-230/460 V
Voltage for 50 Hz	190/380 V
Current	3.8-3.8/1.9 & 4/2 A

Nameplate AMPS	Amps
Efficiency	85.5
Efficiency	Premium
Full Load Efficiency (60 Hz)	85.5
Number of Poles	4
Duty	Continuous
Mount Type	Rigid
Enclosure Type	TEFC
Frame Type	56
Insulation Type	F4
Temperature	40 ºC
Shaft Diameter	5/8 in
C Dimension	12.81 in
Material	Rolled Steel
Weight	32 lb
Service Factor	1.25
Service Factor AMPS	3.2-3.2/1.6 & 3.4/1.7
Power Factor	68.5
Severe Duty Features	False
Overload Protector	Automatic
Thermal Protector	Tstats (N/C)
NEMA Design	B
Start Method	Across The Line
Electrical Type	SQ Cage Ind Run
KVA Code	N
Rotation	REV

RBC PROPRIETARY AND CONFIDENTIAL INFORMATION
This document is the property of REGAL BELOIT CORPORATION ("RBC") including its subsidiaries and divisions and contains proprietary information of RBC. This document is loaned on the express condition that neither it nor the information contained therein shall be disclosed to others without the express written consent of RBC, and that the information shall be used by the recipient only as approved expressly by RBC. This document shall be returned to RBC upon its request. This document may be subject to certain restrictions under U.S. export control laws and regulations.

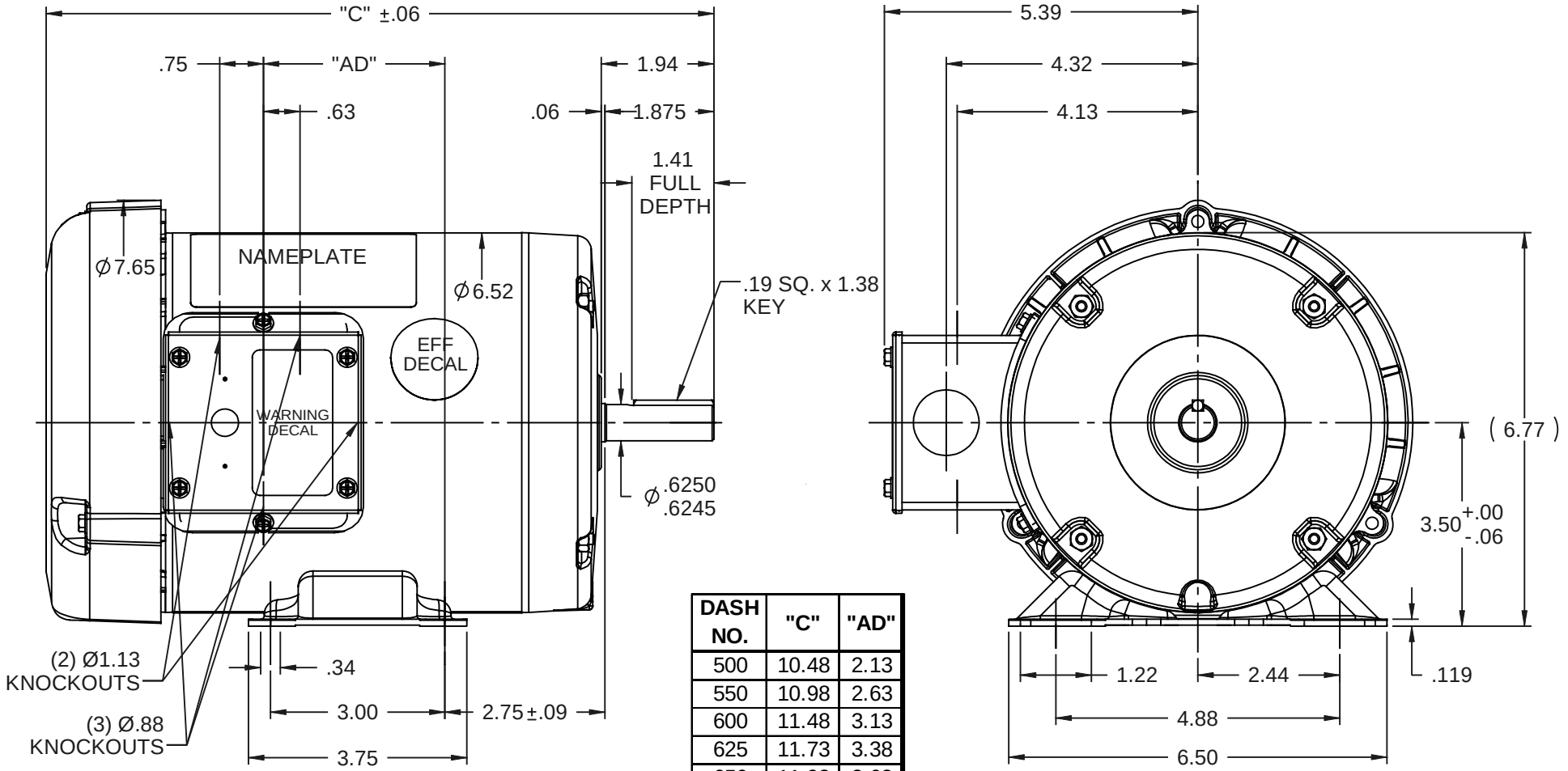

DASH NO.	"C"	"AD"
500	10.48	2.13
550	10.98	2.63
600	11.48	3.13
625	11.73	3.38
650	11.98	3.63
700	12.48	4.13
750	12.98	4.63

NOTES:
1) GASKETS THROUGHOUT

NO	REVISION	BY & DATE	CHK
02	ADDED ITEM #625 (110444.00)	GRB 11/17/2008	DJ
01	ADDED ITEM #S 700 & 750	RVD 09/05/2008	VS

TOLERANCES UNLESS SPECIFIED
DEC INCHES
.X ±.1
.XX ±.03
.XXX ±.005
.XXXX ±.0005
ANG ±1/2°

REGAL BELOIT CORPORATION

DRAWN KMM 08/10/07
CHK
APPR
TITLE OUTLINE - 56 FRAME
TEFC - RIGID
SCALE 3:8
REF 034977
FMF 110444.00
MAT'L
FINISH GENERAL PURPOSE
PAGE OF

THIRD ANGLE PROJECTION

RFP
PREV
NETWORK FILE NAME 028781

SIZE A
DRAWING NO 028781
REV 02

11/24/2008 11:59:58 PM

005010–20

VIEW FROM OUTSIDE OF MOTOR AT SWITCH END.

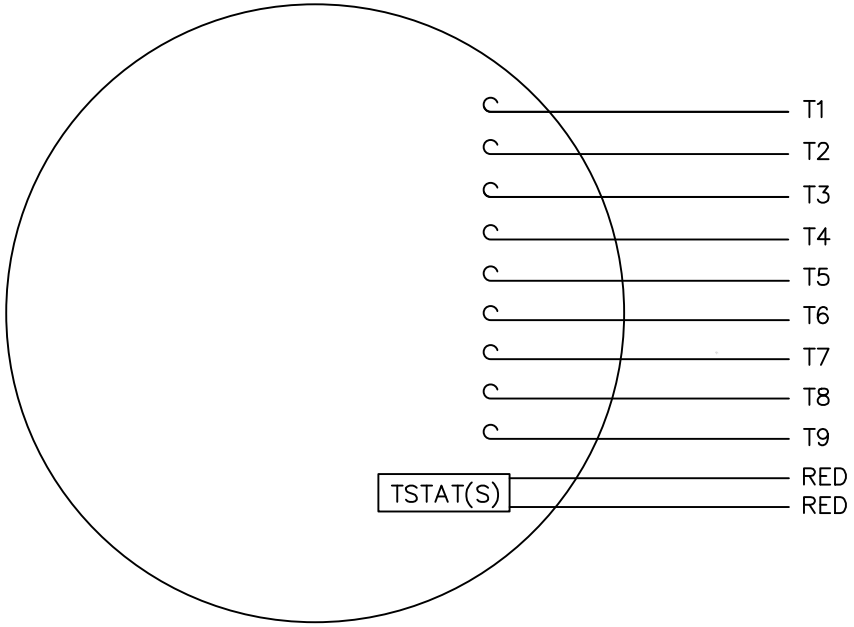

LINE LEADS

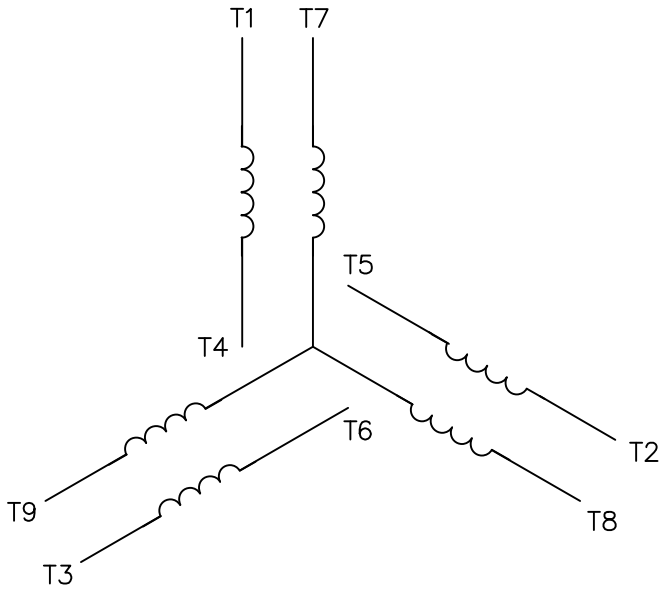

VOLTAGE	L1	L2	L3	JOIN & INSULATE
HIGH	T1	T2	T3	(T4,T7) (T5,T8) (T6,T9)
LOW	T1,T7	T2,T8	T3,T9	T4,T5,T6

NO.	REVISION	BY	DATE
01	UPDATED REV TO MATCH ORACLE	JJK	04/20/00

THIS DRAWING IN DESIGN AND DETAIL IS OUR PROPERTY
AND MUST NOT BE USED EXCEPT IN CONNECTION WITH OUR WORK
ALL RIGHTS OF DESIGN AND INVENTION ARE RESERVED

TOLERANCES UNLESS OTHERWISE SPECIFIED	
DECIMALS	
.00	± .01
.000	± .005
.0000	± .0005
FRACTIONS	± 1/64
ANGLES	± 1/2°
INCH/MM	

LEESON ELECTRIC CORPORATION

DRAWN DBT 12/16/97	TITLE: EXTERNAL WIRING DIAGRAM 3 PHASE W/O PROTECTOR
CH'K'D.	
APPR. KH 12/17/97	MAT'L. BRF DECAL – 004014 (TSTAT) – 080582 NLV
SCALE 1=1	
REF.	FINISH STOCK
FMF	

SIZE A

DRAWING NO. 005010–20

6/28/2007 4:30:38 PM -

Terms and Conditions

TERMS AND CONDITIONS OF SALES QUOTATIONS ARE MADE AND ORDERS ARE ACCEPTED BY SELLER ONLY TO THESE TERMS AND CONDITIONS. THE SELLER FOR THESE TERMS AND CONDITIONS APPLY TO BOTH LEESON ELECTRIC AND LINCOLN MOTORS PRODUCTS:

1. AGREEMENT AND MODIFICATION OF SALES TERMS.
The agreement between Seller and Buyer ("Sales Contract") is with respect to the sale of goods described on the other side hereof (the "Goods"). Any Terms and Conditions contained in any purchase order or other form of communication from Seller's customers, which are additional to or different from these Terms and Conditions, shall be deemed rejected by Seller unless expressly accepted in writing by Seller.

2. ACCEPTANCE OF ORDERS.
Acceptance by Seller of Buyer's purchase order(s) is expressly conditioned upon Buyer's assent to these Terms and Conditions. Buyer will be deemed to have assented to such Terms and Conditions unless Seller receives written notice of any objections within 10 days after Buyer's receipt of this form or in all events prior to any delivery or other performance by Seller of Buyer's order.

3. QUOTATIONS.
Quotations by Seller shall be deemed to be offers by Seller to sell the Goods described therein subject to these Terms and Conditions, and acceptance of such offers is expressly limited to acceptance by Buyer of all of these Terms and Conditions within 30 days from the date of the quotation or as specified. Purchase orders submitted by Buyer for the Goods quoted by Seller shall be subject to and will be deemed to constitute acceptance of these Terms and Conditions. All purchase orders will be subject to approval by Seller.

4. TERMINATION OR MODIFICATION.
The Sales Contract may be modified or terminated only upon Seller's express written consent, which consent will at all times be conditioned on Buyer's agreement to pay Seller's modification or termination charges including, but not limited to expenses and costs plus a reasonable profit, except that any Goods completed on or before Seller's acceptance of termination shall be accepted and paid in full by Buyer.

5. PRICES AND TERMS.
Fulfillment of Buyer's order is contingent upon the availability of materials. The price of the Goods sold pursuant to the Sales Contract shall be based upon Seller's prices in effect at the time of shipment and any acceptance of the order will be on the basis of the freight rates in effect at the time of shipment. In the event of an increase or decrease in the applicable freight charges before the material is shipped, such changes in freight charges will be for the account of Buyer. Price advances, discounts, extras and terms and conditions are subject to changes without notice. Unless otherwise provided on the front side hereof, price is F.O.B. Seller's point of shipment, and terms of payment shall be net 30 days from date of invoice. Seller may assess finance and service charges of 1-1/2 percent per month (or the highest rate allowed by state law) on invoices not paid within stated payment terms. Open account credit status is offered at the discretion of the Seller. Seller may discontinue open account status or change credit limit as warranted, in its opinion, by the financial condition and/or credit history of the Buyer. Seller may require full or partial payment or payment guarantees in advance of shipment whenever, in its opinion, the financial condition and/or credit history of Buyer so warrants. In addition, Seller may, at any time, suspend performance of any order or require payment in cash, security or other adequate assurance satisfactory to Seller when, in Seller's opinion, the financial condition and/or credit history of Buyer warrants such action.

6. TAXES.
Prices do not include sales, use or other similar federal, state or local taxes. Buyer shall either have a tax-exemption certificate on file with the Seller or pay to Seller, in addition to the price of the Goods, any and all applicable taxes, which may be invoiced separately at a later date.

7. DESIGN; EXTRA WORK; BUYER'S MATERIAL.
(a) If any order accepted by Seller contemplates the preparation of special designs by Seller, Buyer issuing such order will have a responsible representative specifically approve all designs prepared by Seller. (b) If Buyer requests extra work not included in the quotation or original order, Buyer will pay for the extra work at reasonable rates as determined by Seller. (c) In the event spoilage/damage occurs on orders where Buyer furnishes any material, Seller shall not be liable for replacement of or damage to such material.

8. RISK OF LOSS, SECURITY INTEREST.
Delivery shall occur, and risk of loss shall pass to Buyer, upon delivery of the Goods to a carrier at the F.O.B. point of shipment. Transportation shall be at Buyer's sole risk and expense, and any claims for losses or damage in transit shall be against the carrier only. Buyer agrees to perform all acts necessary to provide a fully perfected security interest in the Goods in favor of Seller. Seller may, at its option, repossess the same, upon Buyer's default in payment hereunder, and charge Buyer with any deficiency.

9. DELIVERIES AND QUANTITIES.
(a) Delivery dates are not guaranteed but are estimated on the basis of immediate receipt by Seller of all information to be furnished by Buyer and the absence of delay, direct or indirect, resulting from or contributed to by circumstances beyond Seller's reasonable control. If the Goods are non-catalog Goods, Seller may ship overages or underages to the extent of 10 percent of quantity ordered, and Buyer shall pay for such quantity based upon the unit price of the Goods. Seller shall not be required to maintain closer control of quantity, unless specifically agreed to by Seller in writing. Quantities of all Goods may be determined by weight. Any claims for shortage must be within 10 days from the date of receipt of the Goods by Buyer, and in every case the weights found in any particular shipment, including tare, must be given and Seller advised as to the method used by Buyer in computing the count of Goods. (b) In the event that Buyer is unable to accept delivery of the Goods at time of shipment, Seller shall invoice Buyer for the full purchase price as if shipment had been made and: (i) if Seller is able to store such Goods in its own facilities, Buyer will pay Seller the reasonable handling and storage charges for the period of such storage, and (ii) if Seller is unable to store such Goods at its own facility, Seller reserves the right to arrange handling and storage in a suitable bonded warehouse for the Buyer at Buyer's expense. In cases where handling and storage become necessary, it shall be Buyer's responsibility to notify Seller when shipment is to be made. Seller will make necessary arrangements for shipment at Buyer's expense. Freight and handling charges by Seller may not reflect actual freight charges prepaid to the carrier by Seller due to incentive discounts earned by Seller based upon Seller's aggregate volume of freight tendered to a carrier or when a carrier must be used which charges a rate which is different than the rate upon which the Seller's freight and handling charges were based. When shipments are delivered in Seller's private trucks, Buyer will be charged an amount approximating the prevailing common carrier rate.

10. RETURNED GOODS.
Goods may not be returned. However, if Seller consents in writing or upon verbal authorization to the return of Goods for any reason, Buyer, who also shall assume all risk of loss of such returned Goods until actual receipt by Seller, must prepay transportation charges.

11. INSPECTION, ACCEPTANCE.
Buyer shall inspect the Goods immediately upon the receipt thereof. All claims by Buyer (including claims for shortages), except only those provided for under the WARRANTY AND LIMITATIONS OF LIABILITY and PATENTS clauses below, must be asserted in writing by Buyer within a 10-day period or they are waived. If this contract involves partial performances, all such claims must be asserted within a 10-day period for each partial performance. Rejection may be only for defects substantially impairing the value of the Goods. Buyer's remedy for lesser defects shall be those provided for under the Warranty and Limitations of Liability clauses. THERE SHALL BE NO REVOCATION OF ACCEPTANCE. If Buyer wrongfully rejects, revokes or delays acceptance of items or work tendered under this contract, or fails to make a payment due on or before delivery, or repudiates this contract, Seller shall, at its option, have the right to recover as damages, either the price as stated herein (upon recovery of the price, the Goods involved shall become the property of the Buyer) or the profit (including reasonable overhead) which the Seller would make from performance together with incidental damages and reasonable costs.

12. WARRANTIES, LIMITATIONS OF LIABILITY AND DISCLAIMER.
(a) Seller warrants to the Buyer that its motors, gear reducers, gearmotors, gearboxes, DC controllers, and AC drives are free from defects in workmanship and materials when operated under normal conditions and in accordance with nameplate characteristic limits. This warranty shall be in effect for a period of 12 months from date of installation, but in no event be in effect for more than 18 months from date of manufacture, with the following exceptions: i) EPACT motors ("G" prefix), which are warranted for a period of 24 months from date of installation but for not more than 30 months from date of manufacture, ii) Wattsaver Premium Efficiency three phase motors and Speedmaster Inverter-Duty motors are warranted for a period of 36 months from the date of installation but for not more than 42 months from the date of manufacture, & iii) Motor brakes provided as coupler brakes, brake kits, or as part of brakemotors are covered by the manufacturers' (Stearns or Dings) warranties. Certain Goods are warranted for different periods of time under specific conditions. Buyer must consult the current product catalog or internet site to confirm this warranty period.
(b) Seller's sole obligation under the foregoing warranties is limited to either, at Seller's option, replacing or repairing defective Goods (or defective parts thereof) within the warranty period. Seller shall not be liable under any circumstances, for consequential or incidental damages, including, but not limited to personal injury or labor costs. This warranty does not cover the cost of removal, installation, or re-testing of the new or repaired Goods or parts, or any other direct or incidental expenses incurred in shipping the Goods to or from Seller. Replacement Goods or parts are warranted for the remainder of the warranty period applicable to the Goods originally supplied by Seller. All claims for allegedly defective Goods must be made within 10 days after Buyer learns of such alleged defects. All claims not made in writing and received by Seller within such 10-day period shall be deemed waived. With prior approval from Seller, Buyer shall return a sample of the alleged defective part, freight prepaid, for Seller's inspection, and no other Goods shall be returned to Seller's District Office/Warehouse, nearest factory, or Authorized Service Center without Seller's written consent. This warranty shall not extend to Goods subjected to misuse, abuse, neglect, accident or improper installation or maintenance, incorrect lubrication, incorrect electrical connection, improper power supply, or Goods which have been altered or repaired by anyone other than Seller or its authorized representative.
(c) Under no circumstances will Seller be responsible for any expense in connection

with any repairs made by anyone other than Seller or an Authorized Service Center, unless such repairs have been specifically authorized in writing by the Seller Service and Warranty Department.

(d) In the case of motors, drives, gears and reducers manufactured or marketed by Seller, Seller warrants only that such Goods, when shipped, shall be capable of delivering the service rating as indicated in Seller's written documents, including quotations and catalogs or as noted on such Goods, providing such Goods are properly installed, connected, and maintained, correctly lubricated, operating under normal conditions with competent supervision, and within the load limits and voltage range for which it was sold, and provided further that the equipment is free from critical speed, torsional or other type vibration, no matter how induced.

(e) If any prototype or sample was provided to the Buyer, it was used merely to illustrate the general type and quality of Goods and not to warrant that Goods shipped would be of that type or quality.

(f) UNLESS AUTHORIZED IN WRITING BY A CORPORATE OFFICER OR VICE PRESIDENT, NO AGENT, EMPLOYEE OR REPRESENTATIVE OF SELLER HAS ANY AUTHORITY TO BIND SELLER TO ANY AFFIRMATION, REPRESENTATION OR WARRANTY CONCERNING THE GOODS SOLD UNDER THE SALES CONTRACT AND ANY SUCH AFFIRMATION, REPRESENTATION OR WARRANTY HAS NOT FORMED A PART OF THE BASIS OF THE BARGAIN AND SHALL BE UNENFORCEABLE.

(g) THE FOREGOING WARRANTIES ARE EXCLUSIVE AND IN LIEU OF ALL OTHER WARRANTIES OF MERCHANTABILITY, FITNESS FOR A PARTICULAR PURPOSE AND/OR ANY OTHER TYPE, WHETHER EXPRESS OR IMPLIED.

(h) Products not manufactured and work not performed by Seller are warranted only to the extent and in the manner that the same are warranted to Seller by Seller's vendors, and then only to the extent that Seller is reasonably able to enforce such warranty. In enforcing such warranty, it is understood Seller shall have no obligation to initiate litigation unless Buyer undertakes to pay all costs and expenses therefor, including but not limited to reasonable attorney's fees, and indemnifies Seller against any liability to Seller's vendors arising out of such litigation.

(i) THE FOREGOING IS SELLER'S ONLY OBLIGATION AND BUYER'S EXCLUSIVE REMEDY FOR BREACH OF WARRANTY. BUYER'S FAILURE TO SUBMIT A CLAIM AS PROVIDED ABOVE SHALL SPECIFICALLY WAIVE ALL CLAIMS FOR DAMAGES OR OTHER RELIEF INCLUDING BUT NOT LIMITED TO CLAIMS BASED ON LATENT DEFECTS. EVEN IF THE REPAIR OR REPLACEMENT REMEDY SHALL BE DEEMED TO HAVE FAILED OF ITS ESSENTIAL PURPOSE UNDER SECTION 2-719 OF THE UNIFORM COMMERCIAL CODE, SELLER SHALL HAVE NO LIABILITY TO BUYER FOR CONSEQUENTIAL DAMAGES, SUCH AS LOST PROFITS, LOST REVENUE, DAMAGE TO OTHER EQUIPMENT OR LIABILITY OR INJURY TO A THIRD PARTY.IN NO EVENT SHALL BUYER BE ENTITLED TO INCIDENTAL, CONSEQUENTIAL, OR SPECIAL DAMAGES, NOR SHALL SELLER'S LIABILITY EXCEED THE PURCHASE PRICE OF THE GOODS. ANY ACTION ARISING HEREUNDER OR RELATED HERETO MUST BE COMMENCED WITHIN ONE (1) YEAR AFTER THE CAUSE OF ACTION OCCURS OR IT SHALL BE BARRED, NOTWITHSTANDING ANY STATUTORY PERIOD OF LIMITATIONS TO THE CONTRARY.

(j) In the event of the resale of any of the Goods, in whatever form, Buyer will include the following language in a conspicuous place and in a conspicuous manner in a written agreement covering such resale: "THE MANUFACTURER MAKES NO WARRANTIES OR REPRESENTATIONS, EXPRESS OR IMPLIED, BY OPERATION OF LAW OR OTHERWISE, AS TO THE MERCHANTABILITY OR FITNESS FOR A PARTICULAR PURPOSE OF THE GOODS SOLD HEREUNDER. BUYER ACKNOWLEDGES THAT IT ALONE HAS DETERMINED THAT THE GOODS PURCHASED HEREUNDER WILL SUITABLY MEET THE REQUIREMENTS OF THEIR INTENDED USE. IN NO EVENT WILL MANUFACTURER BE LIABLE FOR CONSEQUENTIAL, INCIDENTAL OR OTHER DAMAGES."

(k) Nuclear Use Disclaimer - Goods sold by Seller are not intended for use in connection with any nuclear facility or activity. If so used, Seller disclaims all liability for any nuclear damage, injury or contamination, and Buyer shall indemnify and hold Seller, its officers, agents, employees, successors, assigns and customers harmless from and against any and all losses, damages or expenses of whatever form or nature (including attorneys' fees and other costs of defending any action) which they or any of them may sustain or incur, whether as a result of breach of contract, warranty, tort (including negligence) or otherwise, by reason of such use.

13. REMEDIES AND LIMITATIONS OF LIABILITY.

In the event Buyer claims Seller has breached any of its obligations under the Sales Contract, whether of warranty or otherwise, Seller may request the return of Goods and tender to Buyer, at Seller's option, a replacement shipment of Goods. If Seller so requests the return of the Goods, the Goods will be redelivered to Seller in accordance with Seller's instructions and at Buyer's expense. Except as herein provided, Seller shall have no further obligation under the Sales Contract. The remedies contained in this paragraph and paragraph 12 hereof shall constitute the sole recourse of Buyer against Seller for breach of any of Seller's obligations under the Sales Contract, whether warranty or otherwise.

14. TECHNICAL ADVICE.

Any technical advice furnished or recommendation made by Seller or any representative of Seller concerning any use or application of any of the Goods is believed to be reliable, but SELLER MAKES NO WARRANTY, EXPRESSED OR IMPLIED, ON RESULTS TO BE OBTAINED. BUYER ASSUMES ALL RESPONSIBILITY FOR LOSS OR DAMAGE RESULTING FROM THE HANDLING OR USE OF ANY OF THE GOODS.

15. FORCE MAJEURE.

Seller shall not be liable for failure to perform its obligations under the Sales Contract in whole or in part caused by the occurrence of any contingencies beyond the reasonable control either of Seller or of suppliers of Seller. If any such contingency occurs, Seller may allocate Goods and deliveries among Seller's customers.

16. ASSIGNMENT AND DELEGATION.

No right or interest in the Sales Contract shall be assigned by Buyer without Seller's prior written consent, and no delegation of any obligation owed, or to the performance of any obligation by Buyer shall be made without Seller's prior written consent. Any attempt at assignment or delegation shall be wholly void and totally ineffective for all purposes unless made in conformity with this paragraph.

17. PATTERNS AND TOOLING.

Unless otherwise agreed to in writing with Buyer, Seller shall retain title to and possession of all special tooling, patterns and dies whether paid for by Buyer or not, but such special tooling, patterns and dies that are specifically paid for by Buyer will be held by Seller exclusively for the manufacture of Buyer's Goods for not more than 2 years after the date of Buyer's last order requiring their use. Seller will exercise reasonable care in handling and storing any tooling, patterns or dies specifically paid for by Buyer, but Seller shall not be liable for damage or loss thereof.

18. PATENTS. SELLER MAKES NO REPRESENTATION OR WARRANTY WITH RESPECT TO THE PATENTABILITY OF THE GOODS OR THAT ANY OF THE GOODS WILL BE FREE FROM CLAIMS OF INFRINGEMENT.

Buyer agrees to indemnify and defend Seller in any such suit, action or proceeding for any claim resulting from actual or alleged infringement of any domestic or foreign letters patent for (i) any feature, construction or design incorporated at Buyer's request in any Goods or to adapt such Goods to the particular use of Buyer or Buyer's customers or (ii) any additions, changes or adaptations made by Buyer or Buyer's customers after delivery of the Goods.

19. CONFIDENTIAL INFORMATION.

All drawings, diagrams, specifications, technical data and other materials furnished by Seller and identified by Seller as confidential are and shall remain the exclusive property of Seller and shall be returned to Seller upon request. Buyer agrees to treat such information and material as confidential and not to reproduce or disclose such information or materials without Seller's prior written consent. This paragraph does not apply to any information already known to and readily accessible in the trade or which may become so through no fault of Buyer.

20. CHANGES.

Seller may, at any time, without notice, make changes (whether in design, material, improvements or otherwise) in any catalog Goods, and may discontinue the manufacture of any catalog Goods, all in its sole discretion, without incurring any obligations of any kind as a result thereof, whether for failure to fill an order of Buyer or otherwise.

21. CANCELLATION.

The Buyer may not cancel purchase orders without the prior written consent of Seller. This consent will be conditioned on Buyer's agreement to pay Seller's cancellation charges. Purchase orders for Goods that are substantially complete, as judged by Seller, may not be cancelled and will be shipped and invoiced at the price on the order. For Goods that are not substantially complete, the cancellation charge shall amount to all costs and expenses incurred by Seller and arising out of or in connection with Buyer's order, net of recoverability, but in no event less than 10% of the total invoice price of the equipment or more than the total invoice price.

22. INSTALLATION.

Installation of the Goods shall be by Buyer unless otherwise specifically stated in the Sales Contract.

23. SEVERABILITY.

If any term or provision contained in the Sales Contract is declared or held invalid by a court of competent jurisdiction, such declaration or holding shall not affect the validity of any other term, clause or provision contained herein.

24. GOVERNING LAW AND LIMITATION.

(a) These Terms and Conditions, and the contract of sale between Seller and Buyer, shall be governed by and construed in accordance with the laws of the State of Wisconsin. Seller and Buyer hereby agree that any legal action deemed necessary by either party hereto shall be brought in the Circuit Court in and for Ozaukee County, Wisconsin and hereby consent to the personal jurisdiction of such court in any such action over the parties hereto. The rights and obligations of Seller and Buyer shall not be governed by the provisions of the United Nations Convention on Contracts for the International Sale of Goods.

(b) Attorney's Fees – Buyer agrees to pay all of Seller's costs and expenses of collection and litigation, including but not limited to attorneys' fees and costs.

(c) Applicability - The Terms and Conditions as stated herein are applicable as of the date of this printing and until such time as changed by Seller.

Revised, December, 2007

LEVEL SWITCH

IN CONDENSATE TANK

DWYER INSTRUMENTS INC
FLOTECT

Series L6

FLOTECT® Liquid Level Switch

Easy In-wall or External Installation, Up to 2000 psig (138 bar)

Model L6 with External Float Chamber

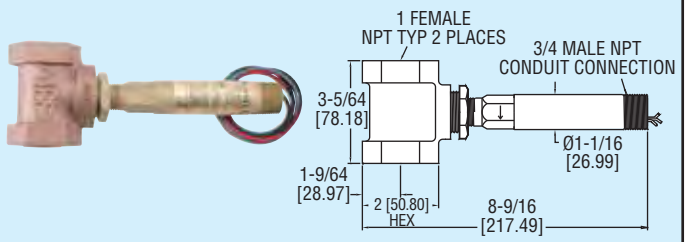

Model L6 with Spherical Float

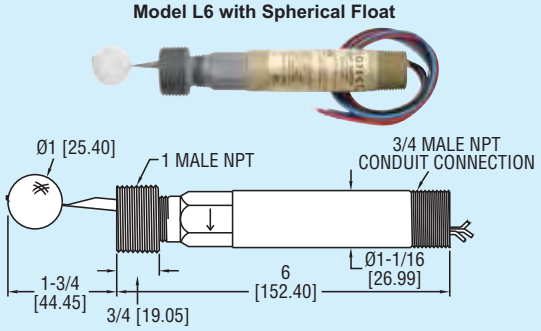

Model L6 with Cylindrical Float

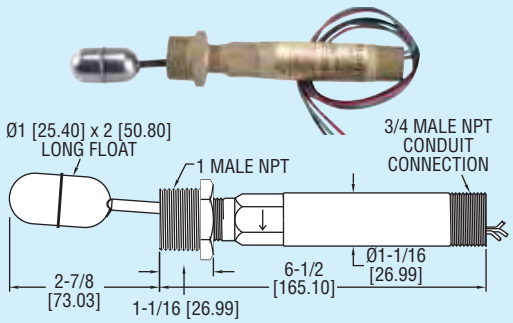

SPECIFICATIONS

Service: Liquids compatible with wetted materials.

Wetted Materials:
Float: Solid polypropylene or 304 SS;
Lower body: Brass or 303 SS;
Magnet: Ceramic;
External float chamber (tee): Matches lower body choice of brass or 303 SS;
Other: Lever arm, spring, pin, etc.: 301 SS.

Temperature Limit: -4 to 220°F (-20 to 105°C) standard, MT high temperature option 400°F (205°C)(MT not UL, CSA or ATEX). ATEX compliant AT option ambient temperature: -4 to 167°F (-20 to 75°C) process temperature: -4 to 220°F (-20 to 105°C).

Pressure Limits: See chart below.

Enclosure Rating: Weatherproof and explosion-proof. Listed with UL and CSA for Class I, Groups A, B, C and D; Class II, Groups E, F, and G. (Group A on stainless steel body models only).ATEX CE 0344 Ex II 2 G EEx d IIC T6 Process Temp≤75°C. EC-Type Certificate No.: KEMA 04ATEX2128

Switch Type: SPDT snap switch standard, DPDT snap switch optional.

Electrical Rating: UL models: 5A @ 125/250 VAC (V~). CSA and ATEX models: 5A @ 125/250 VAC (V~); 5A res., 3A ind. @ 30 VDC (V⎓). MV option: .1A @ 125 VAC (V~). MT option: 5A @125/250 VAC (V~). [MT option not UL, CSA or ATEX].

Electrical Connections: UL models: 18 AWG, 18″ (460 mm) long. CSA and ATEX models: terminal block.

Upper Body: Brass or 303 SS.

Conduit Connection: 3/4″ male NPT standard, 3/4″ female NPT on junction box models.

Process Connection: 1″ male NPT on models without external float chamber, 1″ female NPT on models with external float chamber.

Mounting Orientation: Horizontal with index arrow pointing down.

Weight: Approximately 1 lb (.5 kg) without external float chamber, 1.75 lb (.8 kg) with external float chamber.

Specific Gravity: See chart below.

Agency Approvals: UL, CSA, CE and ATEX.

Model	Body	Installation	Float Material	Max. Pressure psig (bar)	Min. Sp. Gr.
L6EPB-B-S-3-O	Brass	Side Wall Mounting	Polypropylene Spherical	1000 (69)	0.9
L6EPB-B-S-3-A	Brass	Side Wall Mounting	304 SS Cylindrical	200 (13.8)	0.5
L6EPB-B-S-3-C	Brass	Side Wall Mounting	304 SS Spherical	350 (24.1)	0.7
L6EPB-B-S-3-B	Brass	Brass External Float Chamber (Tee)	Polypropylene Spherical	250 (17.2)	0.9
L6EPB-B-S-3-H	Brass	Brass External Float Chamber (Tee)	304 SS Spherical	250 (17.2)	0.7
L6EPB-S-S-3-O	303 SS	Side Wall Mounting	Polypropylene Spherical	2000 (138)	0.9
L6EPB-S-S-3-A	303 SS	Side Wall Mounting	304 SS Cylindrical	200 (13.8)	0.5
L6EPB-S-S-3-C	303 SS	Side Wall Mounting	304 SS Spherical	350 (24.1)	0.7
L6EPB-S-S-3-S	303 SS	304 SS External Float Chamber (Tee)	Polypropylene Spherical	2000 (138)	0.9
L6EPB-S-S-3-L	303 SS	304 SS External Float Chamber (Tee)	304 SS Spherical	350 (24.1)	0.7

Surprisingly compact, the Series L6 Flotect® Level switch is designed and built for years of trouble-free service in a wide variety of process liquid level applications. Operation is simple and dependable with no mechanical linkage as the level switch is magnetically actuated. The float lever pivoted within the body moves when the process liquid displaces the float. A magnet on the opposite end of the float lever controls a second magnet on the switch actuating lever located in the switch housing.

FEATURES

- Leak proof lower body machined from bar stock
- Choice of models for direct side wall mounting or mounted in a tee to act as an external float chamber
- Weatherproof
- Explosion-proof (listings included in specifications)
- Electrical assembly can be easily replaced without removing the unit from the installation so that the process does not have to be shut down
- Sensitive to level changes of less than 1/2″ (12 mm)

OPTIONS

Gold Plated Contacts option for dry circuits, add suffix **-MV** (see electrical rating in specifications)

High Temperature option rated 400°F (204°C), add suffix **-MT** (see electrical rating in specifications, no listings or approvals, only available on models with stainless steel floats)

CSA and UL approved construction, includes weatherproof and explosion-proof junction box, add suffix **-CSA**

ATEX approved construction includes, weatherproof and explosion-proof, junction box, add suffix **-AT**

DPDT contacts, change seventh character in model number to "D". Example: L6EPB-B-D-3-O

303 SS Upper Body, change fifth character in model number to "S". Example: L6EPS-S-S-3-S

Options Not Shown: 1-1/2″ and 2″ male NPT process connection, 2″ female NPT connection tee, and top mount.

Model L6 FLOTECT® Float Switch

Specifications - Installation and Operating Instructions

Explosion-Proof; UL and CSA Listed -
Class I, Groups *A, B, C, & D
Class II, Groups E, F & G
Directive 94/9/EC (ATEX) Compliant for CE Ex
II 2 G EEx d IIC T6 Process Temp≤75°C
*(Group A, stainless steel body only)

SPECIFICATIONS

Service: Liquids compatible with wetted materials.

Wetted Materials:

Float: Solid polypropylene or 304 SS.
Lower Body: Brass or 303 SS.
Magnet: Ceramic.
External Float Chamber (Tee): Matches lower body choice of brass or 303 SS.
Other: Lever Arm, Spring, Pin, etc.: 301 SS.

Temperature Limit: -4 to 220°F (-20 to 105°C) Standard, MT high temperature option 400°F (205°C)(MT not UL, CSA or ATEX). ATEX compliant AT option ambient temperature -4 to 167°F (-20 to 75°C) process temperature: -4 to 220°F (-20 to 105°C).

Pressure Limits: See next page.

Enclosure Rating: Weatherproof and Explosion-proof. Listed with UL and CSA for Class I, Groups A, B, C and D; Class II, Groups E, F, and G. (Group A on stainless steel body models only).CE 0344 Ex II 2 G EEx d IIC T6 Process Temp≤75°C. EC-Type Certificate No.: KEMA 04ATEX2128

Switch Type: SPDT snap switch standard, DPDT snap switch optional.

Electrical Rating: UL models: 5A @ 125/250 VAC (V~). CSA and ATEX models: 5A @ 125/250 VAC (V~); 5A res., 3A ind. @ 30 VDC (V⎓). MV option: .1A @ 125 VAC (V~). MT option: 5A @125/250 VAC (V~). [MT option not UL, CSA or ATEX].

Electrical Connections: UL models: 18 AWG, 18″ (460 mm) long. ATEX/CSA models: terminal block.

Upper Body: Brass or 303 SS.

Conduit Connection: 3/4″ male NPT standard, 3/4″ female NPT on junction box models.

Process Connection: 1″ male NPT on models without external float chamber, 1″ female NPT on models with external float chamber.

Mounting Orientation: Horizontal with index arrow pointing down.

Weight: Approximately 1 lb (.5 kg) without external float chamber, 1.75 lb (.8 kg) with external float chamber.

Specific Gravity: See next page.

Example	L6	EP	B	B	S	3	B	MT		L6EPB-B-S-3-B-MT level switch; brass upper housing, brass lower housing, brass tee with Polypropylene spherical float, SPDT snap switch, and high temperature option
Series	L6									Series L6 level switch
Construction		EP								Explosion proof and weatherproof
Upper Body Material			B S							Brass 303 Stainless Steel
Lower Body Material				B S						Brass 303 Stainless Steel
Circuit (Switch) Type					S D					SPDT DPDT
Line Size						3 4 5 6				1″ NPT 1-1/4″ NPT (No tee models only) 1-1/2″ NPT (No tee models only) 2″ NPT
Tee and Float Options							0 A B C H L S			No Tee, Solid Polypropylene Spherical Float* No Tee, 304 SS Cylindrical Float Brass Tee, Solid Polypropylene Spherical Float* No Tee, 304 SS Spherical Float Brass Tee, 304 SS Spherical Float 303 SS Tee, 304 SS Spherical Float 303 SS Tee, Solid Polypropylene Spherical Float*
Switch Options								MT MV		Gold Contacts on snap switch for dry circuits (see specifications for ratings) High Temperature switch rated 400°F (205°C) (see specifications for ratings)*
Options									AT CSA GL ID JCT JCTLH TBC TOP	ATEX approved construction (with JCT option standard) CSA approved construction (with JCT option standard)* Ground Lead* Customer Information on standard nameplate Weatherproof and explosion-proof junction box* Weatherproof and explosion-proof junction box, left side Terminal Block Connector* Top Mounted (No tee models only)*

* Options that do not have ATEX

Attention: Units without the "AT" suffix are not Directive 94/9/EC (ATEX) compliant. These units are not intended for use in potentially hazardous atmospheres in the EU. These units may be CE marked for other Directives of the EU.

W.E. ANDERSON DIV., DWYER INSTRUMENTS, INC.
P.O. BOX 358 • MICHIGAN CITY, INDIANA 46361 U.S.A.
Phone: 219/879-8000
Fax: 219/872-9057
www.dwyer-inst.com
e-mail: info@dwyer-inst.com

MAXIMUM PRESSURE CHART

Model Number	Float	Pressure Rating psig (kg/cm²)
L6EPB-B-S-3-A	Cylindrical SS	200 (13.8)
L6EPB-B-S-3-B	Polypropylene	250 (17.2)
L6EPB-B-S-3-C	Round SS	350 (24.1)
L6EPB-B-S-3-H	Round SS	250 (17.2)
L6EPB-B-S-3-O	Polypropylene	1000 (69)
L6EPB-S-S-3-A	Cylindrical SS	200 (13.8)
L6EPB-S-S-3-C	Round SS	350 (24.1)
L6EPB-S-S-3-L	Round SS	350 (24.1)
L6EPB-S-S-3-O	Polypropylene	2000 (138)
L6EPB-S-S-3-S	Polypropylene	2000 (138)

WETTED MATERIALS CHART

Model	Brass	Bronze	Ceramic	Polypropylene	301SS	303SS	304SS
B-S-3-A	X		X		X		X
B-S-3-B	X	X	X	X	X		
B-S-3-C	X		X		X		X
B-S-3-H	X	X	X		X		
B-S-3-O	X		X	X	X		
S-S-3-A			X	X	X		X
S-S-3-C			X		X	X	X
S-S-3-L			X		X	X	X
S-S-3-O			X	X	X	X	
S-S-3-S			X	X	X	X	

INSTALLATION

Unpack switch and remove any packing material found inside lower housing or float chamber.

Switch must be installed with body in a horizontal plane and arrow on side pointing down.

If switch has an external float chamber (tee), connect it to vertical sections of 1″ NPT pipe installed outside vessel walls at appropriate levels. If unit has no external float chamber, it must be mounted in a 1″ NPT half coupling welded to the vessel wall. The coupling must extend through the wall.

Inspect and clean wetted parts at regular intervals.

ELECTRICAL CONNECTIONS

Connect wire leads in accordance with local electrical codes and switch action required. N.O. contacts will close and N.C. contacts will open when liquid level causes float to rise. They will return to “normal” condition on decreasing liquid level. Black = common, Blue = N.O. and Red = N.C.

For units supplied with both internal and external grounds the ground screw inside the housing must be used to ground the control. The external ground screw is for supplementary bonding when allowed or required by local code. Some CSA listed models are furnished with a separate green ground wire. Such units must be equipped with a junction box, no supplied but available on special order.

EC-Type Certificate Installation Instructions:

Cable Connection

The cable entry device shall be certified in type of explosion protection flameproof enclosure “d”, suitable for conditions of use and correctly installed. For ambient temperatures over 70°C, cable and cable glands suitable for at least 90°C shall be used.

Conduit Connection

An EEx d certified sealing device such as a conduit seal with setting compound shall be provided immediately to the entrance of the valve housing. For ambient temperatures over 70°C, the wiring and setting compound in the conduit seal shall be suitable for at least 90°C.

Note: ATEX units only: The temperature class is determined by the maximum ambient and or process temperature. Units are intended to be used in ambient of -20°C≤ Tamb ≤75°C. Units may be used in process temperatures up to 105°C providing the enclosure and switch body temperatures do not exceed 75°C. The standard Temperature Class is T6 Process Temp ≤75°C.

All wiring, conduit and enclosures must meet applicable codes for hazardous areas. Conduits and enclosures must be properly sealed. For outdoor or other locations where temperatures vary widely, precautions should be taken to prevent condensation inside switch or enclosure. Electrical components must be kept dry at all times.

CAUTION: To prevent ignition of hazardous atmospheres, disconnect the device from the supply circuit before opening. Keep assembly tightly closed when in use.

MAINTENANCE

Inspect and clean wetted parts at regular intervals. The cover should be in place at all times to protect, the internal components from dirt, dust and weather and to maintain hazardous location ratings. Disconnect device from the supply circuit before opening to prevent ignition of hazardous atmosphere. Repairs to be conducted by Dwyer Instruments, Inc. Units in need of repair should be returned to the factory prepaid.

FLOTECT® MODEL L-6 FLOAT SWITCH — DIMENSION DRAWINGS

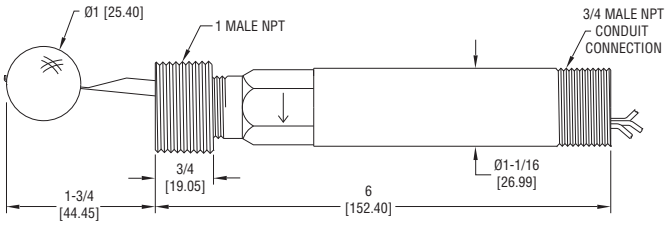

Polypropylene Float

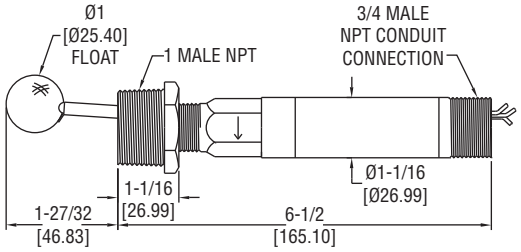

Round Stainless Steel Float

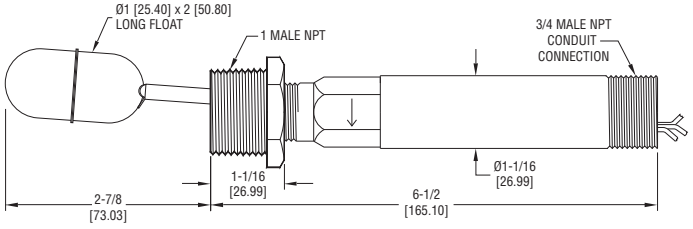

Cylindrical Stainless Steel Float

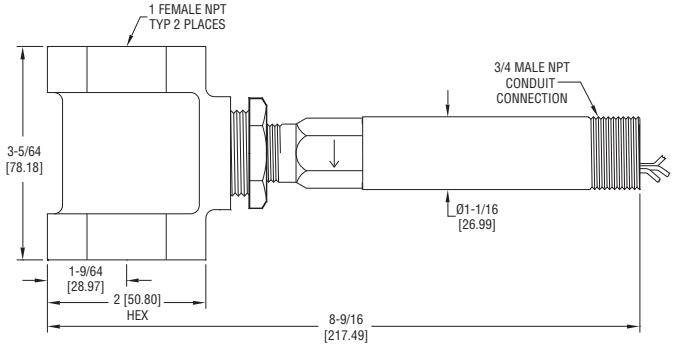

With External Chamber (Tee)

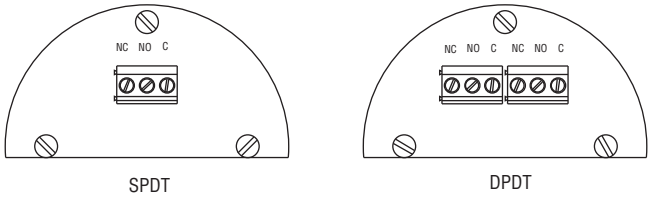

Terminal Connections CSA, ATEX Enclosures

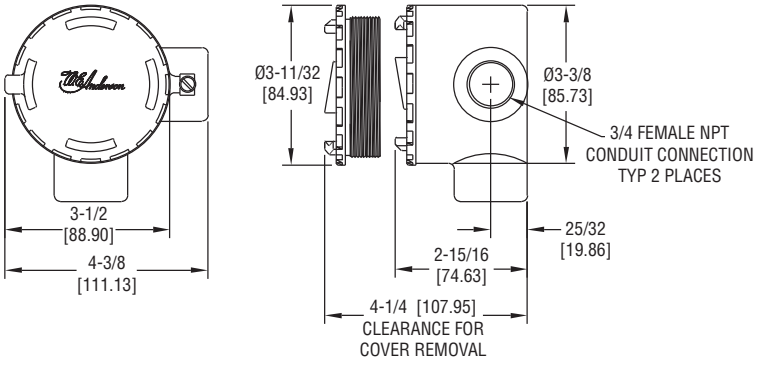

CSA, ATEX Conduit Enclosure

Limited Warranty: The Seller warrants all Dwyer instruments and equipment to be free from defects in workmanship or material under normal use and service for a period of one year from date of shipment. Liability under this warranty is limited to repair or replacement F.O.B. factory of any parts which prove to be defective within that time or repayment of the purchase price at the Seller's option provided the instruments have been returned, transportation prepaid, within one year from the date of purchase. All technical advice, recommendations and services are based on technical data and information which the Seller believes to be reliable and are intended for use by persons having skill and knowledge of the business, at their own discretion. In no case is Seller liable beyond replacement of equipment F.O.B. factory or the full purchase price. This warranty does not apply if the maximum ratings label is removed or if the instrument or equipment is abused, altered, used at ratings above the maximum specified, or otherwise misused in any way.

THIS EXPRESS LIMITED WARRANTY IS IN LIEU OF AND EXCLUDES ALL OTHER REPRESENTATIONS MADE BY ADVERTISEMENTS OR BY AGENTS AND ALL OTHER WARRANTIES, BOTH EXPRESS AND IMPLIED. THERE ARE NO IMPLIED WARRANTIES OF MERCHANTABILITY OR OF FITNESS FOR A PARTICULAR PURPOSE FOR GOODS COVERED HEREUNDER.

Buyers Remedies: THE BUYER'S EXCLUSIVE AND SOLE REMEDY ON ACCOUNT OF OR IN RESPECT TO THE FURNISHING OF NON-CONFORMING OR DEFECTIVE MATERIAL SHALL BE TO SECURE REPLACEMENT THEREOF AS AFORESAID. THE SELLER SHALL NOT IN ANY EVENT BE LIABLE FOR THE COST OF ANY LABOR EXPENDED ON ANY SUCH MATERIAL OR FORM ANY SPECIAL, DIRECT, INDIRECT OR CONSEQUENTIAL DAMAGES TO ANYONE BY REASON OF THE FACT THAT IT SHALL HAVE BEEN NON-CONFORMING OR DEFECTIVE.

W.E. ANDERSON DIV., DWYER INSTRUMENTS, INC.
P.O. BOX 358 • MICHIGAN CITY, INDIANA 46361 U.S.A.

Phone: 219/879-8000
Fax: 219/872-9057

www.dwyer-inst.com
e-mail: info@dwyer-inst.com

PIPING

POLYVINYL CHLORIDE

SPEARS MANUFACTURING

PVC SCHEDULE 40 FITTINGS

40-2-0604

Performance Engineered & Tested

SPEARS® Schedule 40 PVC fitting designs combine years of proven experience with computer generated stress analysis to yield the optimum physical structure and performance for each fitting. Material reinforcement is uniformly placed in stress concentration areas for substantially improved pressure handling capability. Resulting products are subjected to numerous verification tests to assure the very best PVC fittings available.

Full 1/4" Through 12" Availability

Spears® comprehensive line of PVC fittings offers a variety of injection molded configurations in Schedule 40 sizes 1/4" through 12" conforming to ASTM D 2466.

Exceptional Chemical & Corrosion Resistance

Unlike metal, PVC fittings never rust, scale, or pit, and will provide many years of maintenance-free service and extended system life.

High Temperature Ratings

PVC thermoplastic can handle fluids at service temperatures up to 140°F (60°C), allowing a wide range of process applications, including corrosive fluids.

Lower Installation Costs

Substantially lower material costs than steel alloys or lined steel, combined with lighter weight and ease of installation, can reduce installation costs by as much as 60% over conventional metal systems.

Higher Flow Capacity

Smooth interior walls result in lower pressure loss and higher volume than conventional metal fittings.

Additional Fabricated Configurations through 36"

Extra large, hard-to-find, and custom configurations are fabricated from NSF Certified pipe. Fittings are engineered and tested to provide full pressure handling capabilities according to Spears® specifications.

PVC Valves

SPEARS® PVC Valve products are available for total system compatibility and uniformity; see SPEARS® THERMOPLASTIC VALVES PRODUCT GUIDE & ENGINEERING SPECIFICATIONS (V-4).

Advanced Design Specialty Fittings

Spears® wide range of innovative, improved products include numerous metal-to-plastic transition fittings and unions with Spears® patented special reinforced (SR) plastic threads.

Sample Engineering Specifications

All PVC Schedule 40 fittings shall be produced by Spears® Manufacturing Company from PVC Type I cell classification 12454, conforming to ASTM D 1784. All injection molded PVC Schedule 40 fittings shall be Certified for potable water service by NSF International and manufactured in strict compliance to ASTM D 2466. All fabricated fittings shall be produced in accordance with Spears® General Specifications for Fabricated Fittings.

MADE IN THE U.S.A. WITH PRIDE

LOSS PREVENTION CERTIFICATION BOARD LPCB UKAS QUALITY MANAGEMENT 007

Quality Systems Certificate No. 293
Corporate Facilities, Sylmar, CA
Assessed to ISO 9001: 2000

PROGRESSIVE PRODUCTS FROM SPEARS® INNOVATION & TECHNOLOGY

Visit our web site: www.spearsmfg.com

PVC Thermoplastic Pipe Temperature Pressure De-Rating

To determine the maximum internal pressure rating at an elevated temperature, simply multiply the pipe pressure rating at 73°F by the percentage specified for the desired temperature.

System Operating Temperature °F (°C)	73 (23)	80 (27)	90 (32)	100 (38)	110 (43)	120 (49)	130 (54)	140 (60)
PVC	100%	90%	75%	62%	50%	40%	30%	22%

NOTE: Valves, Unions and Specialty Products have different elevated temperature ratings than pipe.

PVC Basic Physical Properties

Properties	ASTM Test Method	PVC
Mechanical Properties, 73°F		
Specific Gravity, g/cm^3	D 792	1.41
Tensile Strength, psi	D 638	7,200
Modulus of Elasticity, psi	D 638	440,000
Compressive Strength, psi	D 695	9,000
Flexural Strength, psi	D 790	13,200
Izod Impact, notched, ft-lb/in	D 256	.65
Thermal Properties		
Heat Deflection Temperature, °F at 66 psi	D 648	165
Thermal Conductivity, BTU/hr/sq ft/°F/in	C 177	1.2
Coefficient of Linear Expansion, in/in/°F	D 696	3.1 X 10^5
Flammability		
Limiting Oxygen Index, %	D 2863	43
UL 94 rating	94V-0	
Other Properties		
Water Absorption, % 24 hr.	D 570	.05
Industry Standard Color	White / Dark Gray	
ASTM Cell Classification	D 1784	12454
NSF Potable Water Approved	Yes	

PVC Chemical Resistance

PVC is generally inert to most mineral acids, bases, salts and paraffinic hydrocarbon solutions. For more information on PVC chemical resistance refer to the Chemical Resistance of Rigid Vinyls Based on Immersion Test, published by the GEON® Company.

NOT FOR USE WITH COMPRESSED AIR OR GAS

Spears® Manufacturing Company DOES NOT RECOMMEND the use of thermoplastic piping products for systems to transport or store compressed air or gases, or the testing of thermoplastic piping systems with compressed air or gases in above and below ground locations. The use of our product in compressed air or gas systems automatically voids any warranty for such products, and its use against our recommendation is entirely the responsibility and liability of the installer.

WARNING: DO NOT USE COMPRESSED AIR OR GAS TO TEST ANY PVC OR CPVC THERMOPLASTIC PIPING PRODUCT OR SYSTEM, AND DO NOT USE DEVICES PROPELLED BY COMPRESSED AIR OR GAS TO CLEAR SYSTEMS. THESE PRACTICES MAY RESULT IN EXPLOSIVE FRAGMENTATION OF SYSTEM PIPING COMPONENTS CAUSING SERIOUS OR FATAL BODILY INJURY.

SPEARS® MANUFACTURING COMPANY • CORPORATE OFFICE
15853 Olden St., Sylmar, CA 91342 • PO Box 9203, Sylmar, CA 91392
(818) 364-1611 • www.spearsmfg.com

PACIFIC SOUTHWEST
15860 Olden St.
Sylmar (Los Angeles), CA 91342
(818) 364-1611 • (800) 862-1499
Fax (818) 367-3014

ROCKY MOUNTAIN
4880 Florence St.
Denver, CO 80238
(303) 371-9430 • (800) 777-4154
Fax (303) 375-9546

UTAH
5395 West 1520 South
Salt Lake City, UT 84104
(303) 371-9430 • (800) 777-4154
Fax (303) 375-9546

SOUTHEAST
4205 Newpoint Pl. Suite 100
Lawrenceville (Atlanta), GA 30043
(678) 985-1263 • (800) 662-6326
Fax (678) 985-5642

MIDWEST
1 Gateway Ct . Suite A
Bolingbrook (Chicago), IL 60440
(630) 759-7529 • (800) 662-6330
Fax (630) 759-7515

NORTHWEST
4103 C St. NE Suite 200
Auburn (Seattle), WA 98002
(253) 939-4433 • (800) 347-7327
Fax (253) 939-7557

SOUTH CENTRAL
4250 Patriot Dr. Suite 300
Grapevine (Dallas), TX 76051-2317
(972) 691-4003 • (800) 441-1437
Fax (972) 691-4404

NORTHEAST
590 Industrial Dr. Suite 100
Lewisberry (Harrisburg), PA 17339-9532
(717) 938-8844 • (800) 233-0275
Fax (717) 938-6547

FLORIDA
9563 Parksouth Court
Orlando, FL 32837
(407) 843-1960 • (800) 327-6390
Fax (407) 425-3563

INTERNATIONAL SALES
15853 Olden St.
Sylmar (Los Angeles), CA 91342
(818) 364-1611 • Fax (818) 898-3774

© Copyright 2007 Spears® Manufacturing Company. All Rights Reserved. Printed in the United States of America 01/07.

PVC SCHEDULE 80 FITTINGS

80-2-1000

Performance Engineered & Tested

SPEARS® Schedule 80 PVC fitting designs combine years of proven experience with computer generated stress analysis to yield the optimum physical structure and performance for each fitting. Material reinforcement is uniformly placed in stress concentration areas for substantially improved pressure handling capability. Resulting products are subjected to numerous verification tests to assure obtaining the very best PVC fittings available.

Full 1/4" Through 12" Availability

Spears® comprehensive line of injection molded PVC fittings offers a variety of configurations in molded Schedule 80 sizes 1/4" through 12" conforming to ASTM D 2467 and Spears® exclusive CL150 Flanges in sizes 1/2" through 16".

Exceptional Chemical & Corrosion Resistance

Unlike metal, PVC fittings never rust, scale, or pit, and will provide many years of maintenance-free service and extended system life.

High Temperature Ratings

PVC thermoplastic can handle fluids at service temperatures up to 140°F (60°C), allowing a wide range of process applications, including corrosive fluids.

Lower Installation Costs

Substantially lower material costs than steel alloys or lined steel, combined with lighter weight and ease of installation, can reduce installation costs by as much as 60% over conventional metal systems.

Higher Flow Capacity

Smooth interior walls result in lower pressure loss and higher volume than conventional metal fittings.

Additional Fabricated Configurations through 36"

Extra large, hard-to-find, and custom configurations are fabricated from NSF Certified pipe. Fittings are engineered and tested to provide full pressure handling capabilities according to Spears® specifications.

Advanced Design Specialty Fittings

Spears® wide range of innovative, improved products include numerous metal-to-plastic transition fittings and unions with Spears® patented special reinforced (SR) plastic threads.

PVC Valves

SPEARS® PVC Valve products are available for total system compatibility and uniformity; see SPEARS® THERMOPLASTIC VALVES PRODUCT GUIDE & ENGINEERING SPECIFICATIONS (V-4).

MADE IN THE U.S.A. WITH PRIDE

LOSS PREVENTION CERTIFICATION BOARD LPCB UKAS QUALITY MANAGEMENT 007

Quality Systems Certificate No. 293
Corporate Facilities, Sylmar, CA
Assessed to ISO 9001: 2000

Sample Engineering Specifications

All PVC Schedule 80 fittings shall be produced by Spears® Manufacturing Company from PVC Type I, cell classification 12454, conforming to ASTM Standard D 1784. All injection molded PVC Schedule 80 fittings shall be Certified for potable water service by NSF International and manufactured in strict compliance to ASTM D 2467. All fabricated fittings shall be produced in accordance with Spears® General Specifications for Fabricated Fittings. All PVC flanges shall be designed and manufactured to meet CL150 bolt pattern per ANSI Standard B16.5 and rated for a maximum internal pressure of 150 psi, non-shock at 73°F.

PVC Thermoplastic Pipe Temperature Pressure De-Rating

To determine the maximum internal pressure rating at an elevated temperature, simply multiply the pipe pressure rating at 73°F by the percentage specified for the desired temperature.

System Operating Temperature °F (°C)	73 (23)	80 (27)	90 (32)	100 (38)	110 (43)	120 (49)	130 (54)	140 (60)
□□C	100□	□0□	□5□	□2□	50□	40□	30□	22□

NOTE: Valves, Unions and Specialty Products have different elevated temperature ratings than pipe.

Typical Material Properties

Properties	ASTM Test Method	PVC
Mechanical Properties, 73°F		
□peci□c □ra□it□, g□c□ ³	D □□2	1□41
□ensile □trength, psi	D □38	□,200
Mo□□l□s o□□lasticit□, psi	D □38	440,000
Co□ pressi□e □trength, psi	D □□5	□,000
□lex□ral □trength, psi	D □□0	13,200
□□o□ □□pact, notche□, □t□□ □in	D 25□	□□5
Thermal Properties		
□eat De□ection □e□ perat□re, □□ at □□psi	D □48	1□5
□her□ al Con□□cti□it□, B□□ □hr □s□ □t □□□ □in	C 1□□	1□2
Coe□□cient o□□inear □xpansion, in □in □□□	D □□□	3□1 x 10⁻⁵
Flammability		
□i□ite□ □x□gen □n□ex, □	D 28□3	43
□□ □4 □ating	□4□0	
Other Properties		
Water □□sorption, □ 24 hr□	D 5□0	□05
□n□□str□ □tan□ar□ Color	White □Dar□ □ra□	
□□□M Cell Classi□cation	D 1□84	12454
□□□ □ota□le Water □ppro□e□	□□□	

PVC Chemical Resistance

PVC is generally inert to most mineral acids, bases, salts and paraffinic hydrocarbon solutions. For more information on PVC chemical resistance refer to the Chemical Resistance of Rigid Vinyls Based on Immersion Test, published by the GEON® company.

NOT FOR USE WITH COMPRESSED AIR OR GASES

Spears® Manufacturing Company DOES NOT RECOMMEND the use of thermoplastic piping products for systems to transport or store compressed air or gases, or the testing of thermoplastic piping systems with compressed air or gases in above and below ground locations. The use of our product in compressed air or gas systems automatically voids any warranty for such products, and its use against our recommendation is entirely the responsibility and liability of the installer.

WARNING: DO NOT USE COMPRESSED AIR OR GAS TO TEST ANY PVC OR CPVC THERMOPLASTIC PIPING PRODUCT OR SYSTEM, AND DO NOT USE DEVICES PROPELLED BY COMPRESSED AIR OR GAS TO CLEAR SYSTEMS. THESE PRACTICES MAY RESULT IN EXPLOSIVE FRAGMENTATION OF SYSTEM PIPING COMPONENTS CAUSING SERIOUS OR FATAL BODILY INJURY.

SPEARS® MANUFACTURING COMPANY • CORPORATE OFFICE
15853 Olden St., Sylmar, CA 91342 • PO Box 9203, Sylmar, CA 91392
(818) 364-1611 • www.spearsmfg.com

PACIFIC SOUTHWEST
15860 Olden St.
Sylmar (Los Angeles), CA 91342
(818) 364-1611 • (800) 862-1499
Fax (818) 367-3014

ROCKY MOUNTAIN
4880 Florence St.
Denver, CO 80238
(303) 371-9430 • (800) 777-4154
Fax (303) 375-9546

UTAH
5395 West 1520 South
Salt Lake City, UT 84104
(303) 371-9430 • (800) 777-4154
Fax (303) 375-9546

SOUTHEAST
4205 Newpoint Pl., Suite 100
Lawrenceville (Atlanta), GA 30043
(678) 985-1263 • (800) 662-6326
Fax (678) 985-5642

MIDWEST
1 Gateway Ct., Suite A
Bolingbrook (Chicago), IL 60440
(630) 759-7529 • (800) 662-6330
Fax (630) 759-7515

NORTHWEST
4103 C St. NE Suite 200
Auburn (Seattle), WA 98002
(253) 939-4433 • (800) 347-7327
Fax (253) 939-7557

SOUTH CENTRAL
4250 Patriot Dr., Suite 300
Grapevine (Dallas), TX 76051-2317
(972) 691-4003 • (800) 441-1437
Fax (972) 691-4404

NORTHEAST
590 Industrial Dr., Suite 100
Lewisberry (Harrisburg), PA 17339-9532
(717) 938-8844 • (800) 233-0275
Fax (717) 938-6547

FLORIDA
9563 Parksouth Court
Orlando, FL 32837
(407) 843-1960 • (800) 327-6390
Fax (407) 425-3563

INTERNATIONAL SALES
15853 Olden St.
Sylmar (Los Angeles), CA 91342
(818) 364-1611 • Fax (818) 898-3774

© Copyright 2008 Spears® Manufacturing Company. All Rights Reserved. Printed in the United States of America 04/08.

PVC & CPVC TRUE UNION 2000 VALVES

TU2000-2-0408

One of the Most Versatile, Compact Valve Designs Available

Spears® True Union 2000 Ball Valves, 3-Way Ball Valves and Ball Check Valves provide maximum versatility with fully interchangeable valve cartridges. Provides for easier system design modifications and upgrades in multiphase projects, or anywhere changes in valve types are desired. Simply exchange any True Union 2000 valve in-line using existing union nuts. Also mates with Spears® new Schedule 80 Unions and Diaphragm Valves. All True Union 2000 valves feature a low profile, compact design for minimal space requirements. Available in PVC or CPVC with choice of EPDM or Dupont Dow Viton® O-ring seals and socket, flanged, spigot or optional Spears® patented Special Reinforced (SR) threaded end connectors. Additionally, Spears® offers valve Retrofit Kits for easy in-line replacement of other valves and factory installed Actuation Packages. Assembled with silicone-free lubricant.

True Union 2000 Industrial Ball Valve

- Multi-featured Industrial Grade
- Built-in Handle Lockout
- Fully Serviceable, Replaceable Components
- Safe-T-Blocked® Seal Carrier - Full Rated Pressure
- ISO Pattern Actuation Mounting Option
- Spears® Dual O-ring Safe-T-Shear® Stem
- Self Adjusting PTFE Floating Seat Design
- Sizes 1/2" - 4" pressure rated to 235 psi @ 73°F, sizes 6" - 8" and all flanged to 150 psi @ 73°F
- NSF Certified for Potable Water Use
- Also Available in **SPEARS® LXT™** High Purity, Low Extractable PVC Material
- Produced in IPS sizes 1/2" - 6" with Socket, Flanged, Spigot or SR Threaded End Connectors
- 8" with Socket and Flanged End Connectors

True Union 2000 Industrial 3-Way Valve

- Industrial Grade, Multiport, Diverter, L-Pattern & T-Pattern configurations Vertical 3-Way or Horizontal Diverter (shown)
- Built-in Handle Lockout
- Fully Serviceable, Replaceable Components
- Safe-T-Blocked® Seal Carrier - Full Rated Pressure
- ISO Pattern Actuation Mounting Option
- Spears® Dual O-ring Safe-T-Shear® Stem
- Self Adjusting PTFE Floating Seat Design
- Sizes 1/2" - 2" pressure rated to 235 psi @ 73°F, sizes 2-1/2" - 4" and all flanged to 150 psi @ 73°F
- NSF Certified for Potable Water Use
- Produced in IPS sizes 1/2" - 4" with Socket, Flanged, Spigot or SR Threaded End Connectors

MADE IN THE U.S.A. WITH PRIDE

PROGRESSIVE PRODUCTS FROM SPEARS®
INNOVATION & TECHNOLOGY

Visit our web site:
www.spearsmfg.com

LPCB LOSS PREVENTION CERTIFICATION BOARD — UKAS QUALITY MANAGEMENT 007

Quality Systems Certificate No. 293
Corporate Facilities, Sylmar, CA
Assessed to ISO 9001: 2000

True Union 2000 Industrial Ball Check Valve

- Industrial Grade
- Flow-Tested for Minimum Turbulence
- Fully Serviceable, Replaceable Components, uses Standard O-ring Seat
- Safe-T-Blocked® Seal Carrier - Full Rated Pressure
- Easily Converted to Foot Valve
- NSF Certified for Potable Water Use
- Also Available in **SPEARS® LXT™** High Purity, Low Extractable PVC Material
- Sizes 1/2" - 4" pressure rated to 235 psi @ 73°F, sizes 6" - 8" and all flanged to 150 psi @ 73°F
- Produced in IPS sizes 1/2" - 6" with Socket, Flanged, Spigot or optional SR Threaded End Connectors
- Produced in size 8" with Socket and Flanged End Connectors
- Also available in PVC White

Check Valve Size	1/2	3/4	1	1-1/4	1-1/2	2	2-1/2	3	4	6	8[1]
C_V	**6.3**	**17**	**25**	**65**	**86**	**130**	**200**	**275**	**500**	**800**	**N/A**

1: 8" Venturied Valves are 6" ball valves fitted with 6x8 end connector adapters.

Economical True Union 2000 Standard Ball Valve

- High quality Standard Ball Valve
- Allows future system upgrade
- Excellent for OEM Applications
- Replaceable Seats
- Safe-T-Blocked® Seal Carrier - Full Rated Pressure
- Spears® Safe-T-Shear® Stem
- Self Adjusting Floating Seat
- Sizes 1/2" - 2" pressure rated to 235 psi @ 73°F, sizes 2-1/2" - 4" and all flanged to 150 psi @ 73°F
- NSF Certified for Potable Water Use
- Produced in IPS sizes 1/2" - 4" with Socket, Flanged, Spigot or SR Threaded End Connectors
- Also available in PVC White

True Union 2000 Retrofit Valves or Kits

Easily converts any system over to all True Union 2000 style valves for consistent valve type and uniform maintenance. Special extended socket style End Connectors (2) allow retrofit replacement of other brand valves in existing piping systems with a new True Union 2000 valve. Simply cut out old valve according to specified dimension and install retrofit end connectors. End connectors are provided with either EPDM or Viton® O-rings. Can be ordered as End Connector Kit or fully assembled Retrofit Valve.

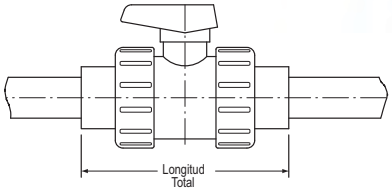

BALL VALVE FOR REPLACEMENT

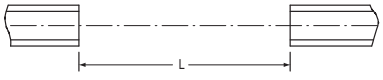

PIPE LAYING LENGTH AFTER CUTTING

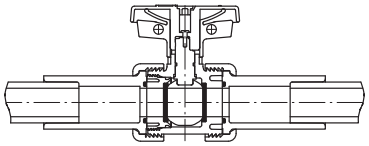

TRUE UNION 2000 BALL VALVE INSTALLED WITH RETROFIT KIT

Size	1/2	3/4	1	1-1/4	1-1/2	2	2-1/2	3	4	6
L	4-29/32	5-7/16	6-3/32	7-1/4	7-1/2	8-17/32	10-3/4	11-7/16	14-5/16	N/A

L ± 1-1/16

Contact Spears® for Special Kits/Valves to replace older Spears® (Regular Style) True Union Ball Valves

True Union 2000 Valve Dimensional Data

Industrial Ball Valve, Ball Check Valve, Standard Ball Valve, 6" & 8" Industrial Lever Handle

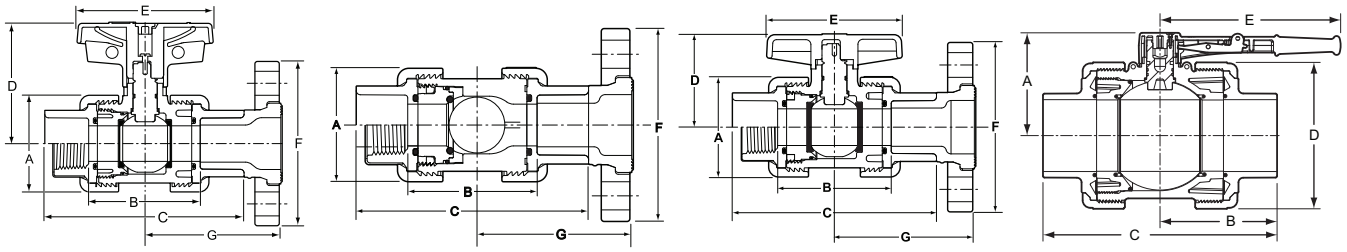

Nominal Size	A	Dimensions Reference (inches, ±1/16)										
		B[1]		C			D		E		F	G
		Soc/Thd	Spigot	Socket	Thread	Spigot	Industrial	Standard	Industrial	Standard		
1/2	1-7/8	2-3/8	2-7/8	4-3/16	3-3/16	4-5/8	2-9/16	1-5/8	2-13/16	2-1/2	3-1/2	2-31/32
3/4	2-1/4	2-3/4	3-1/4	4-3/4	4-1/4	5-1/4	2-7/8	2	3-3/8	3	3-7/8	3-5/16
1	2-1/2	2-7/8	3-1/2	5-1/8	4-11/16	5-3/4	3-1/8	2-5/16	3-7/16	3-7/16	4-1/2	3-5/8
1-1/4	3-1/16	3-1/4	3-13/16	5-3/4	5-3/16	6-5/16	3-5/8	2-13/16	3-7/8	3-9/16	4-5/8	3-31/32
1-1/2	3-1/2	3-1/2	4	6-1/4	5-7/16	6-3/4	4	3-1/16	4-3/16	3-7/8	5	4-3/8
2	4-1/4	4-3/4	5-3/16	7-3/4	6-3/4	8-1/4	4-1/2	3-3/4	5-1/8	5	6	5-1/4
2-1/2	5-3/8	6-7/8	7-13/16	10-7/16	9-11/16	11-3/8	5-1/8	5-7/8	6-1/4	7-5/8	7-1/2	6
3	6-3/16	7	7-13/16	10-11/16	9-7/8	11-9/16	5-7/8	5-7/8	7-5/8	7-5/8	7-1/2	6-13/16
4	7-5/8	7-5/16	8-1/4	11-7/8	10-1/4	12-3/4	6-3/4	6-3/4	9-3/16	6-3/4	9	7-1/2
6	11-5/8	11-1/16	13	17-1/16	15-3/4	18-1/2	8-1/8	---	14-5/16	---	11-1/4	10-3/16
8[2]	11-5/8	23-3/16	---	31-7/8	---	---	8-1/8	---	14-5/16	---	13-1/2	17-13/16

1: Valve Lay Length
2: 8" Venturied Valves are 6" ball valves fitted with 6x8 end connector adapters.

Industrial 3-Way Ball Valve

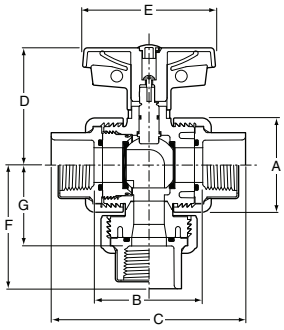

Nominal Size	A	Vertical 3-Way Ball Valves[3]												Oper.[2] Torque (in.lbs.)
		B[1]		C			D	E	F			G		
		Soc/SR	Spig	Soc	SR	Spig			Soc	SR	Spig	Soc/SR	Spig	
1/2	1-7/8	2-7/16	2-15/16	4-1/4	3-27/32	4-3/4	2-9/16	2-13/16	2-3/4	2-3/8	2-13/16	1-11/16	2	12
3/4	2-1/4	2-3/4	3-5/16	4-3/4	4-1/4	5-3/8	2-7/8	3-5/16	3	2-3/4	3-5/16	2	2-5/16	12
1	2-1/2	2-7/8	3-1/2	5-1/8	4-11/16	5-3/4	3-1/8	3-7/16	3-1/4	3	3-9/16	2-1/8	2-7/16	20
1-1/4	3-1/16	3-1/4	3-13/16	5-3/4	5-3/16	6-5/16	3-5/8	3-13/16	3-3/4	3-3/8	4-1/16	2-3/8	2-13/16	25
1-1/2	3-1/2	3-1/2	4	6-1/4	5-7/16	6-3/4	4	4-3/16	4-3/16	3-13/16	4-1/2	2-3/16	3-1/8	40
2	4-1/4	4-3/4	5-3/16	7-3/4	6-3/4	8-1/4	4-1/2	5-1/8	5	4-1/2	5-5/16	3-1/2	3-3/4	67
2-1/2	5-3/8	5-7/8	7-13/16	9-5/16	8-1/2	11-3/8	5-1/8	6-1/4	5-7/8	5-1/2	6-7/16	4-1/8	5-5/16	120
3	6-3/16	6-7/8	7-13/16	10-11/16	9-3/4	11-9/16	5-7/8	7-5/8	6-11/16	6-3/16	7-3/16	4-3/4	5-5/16	120
4	7-1/2	7-1/4	8-1/4	11-13/16	10-1/4	12-13/16	6-3/4	9-3/16	7-1/8	6-3/4	8-3/4	5-7/8	6-1/2	336

1: Valve Lay Length
2: Torque required at valve maximum internal pressure rating, 5ft/sec. Flow velocity; due to adjustment differences during installation, actual values may vary.
3: Diverter style valve, no shutoff on branch

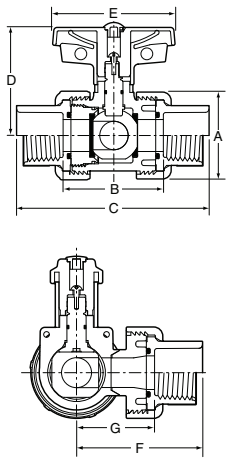

Nominal Size	A	Horizontal Diverter Ball Valves[3]												Oper.2 Torque (in.lbs.)
		B[1]		C			D	E	F			G		
		Soc/SR	Spig	Soc	SR	Spig			Soc	SR	Spig	Soc/SR	Spig	
1/2	1-3/16	2-7/16	2-15/16	4-3/16	3-13/16	4-3/4	2-9/16	2-13/16	2-9/16	2-3/8	2-13/16	1-11/16	2	12
3/4	2-1/4	2-3/4	3-5/16	4-3/4	4-1/4	5-3/8	2-7/8	3-5/16	3	2-3/4	3-5/16	2	2-5/16	12
1	2-1/2	2-7/8	3-1/2	5-1/8	4-11/16	5-3/4	3-1/8	3-7/16	3-1/4	3	3-9/16	2-1/8	2-7/16	20
1-1/4	3-1/16	3-1/4	3-13/16	5-3/4	5-3/16	6-5/16	3-5/8	3-13/16	3-3/4	3-3/8	4-1/16	2-3/8	2-13/16	25
1-1/2	3-1/2	3-1/2	4	6-1/4	5-7/16	6-3/4	4	4-3/16	4-3/16	3-13/16	4-1/2	2-3/16	3-1/8	40
2	4-1/4	4-3/4	5-3/16	7-3/4	6-3/4	8-1/4	4-1/2	5-1/8	5	4-1/2	5-5/16	3-1/2	3-3/4	67
2-1/2	5-3/8	5-7/8	7-13/16	9-5/16	8-1/2	11-3/8	5-1/8	6-1/4	5-7/8	5-1/2	6-7/16	4-1/8	5-5/16	120
3	6-3/16	6-7/8	7-13/16	10-11/16	9-3/4	11-9/16	5-7/8	7-5/8	6-11/16	6-3/16	7-3/16	4-3/4	5-5/16	120
4	7-1/2	7-1/4	8-1/4	11-13/16	10-1/4	12-13/16	6-3/4	9-3/16	7-1/8	6-3/4	8-3/4	5-7/8	6-1/2	336

1: Valve Lay Length
2: Torque required at valve maximum internal pressure rating, 5ft/sec. Flow velocity; due to adjustment differences during installation, actual values may vary.
3: Diverter style valve, no shutoff on branch

3-Way Port Options

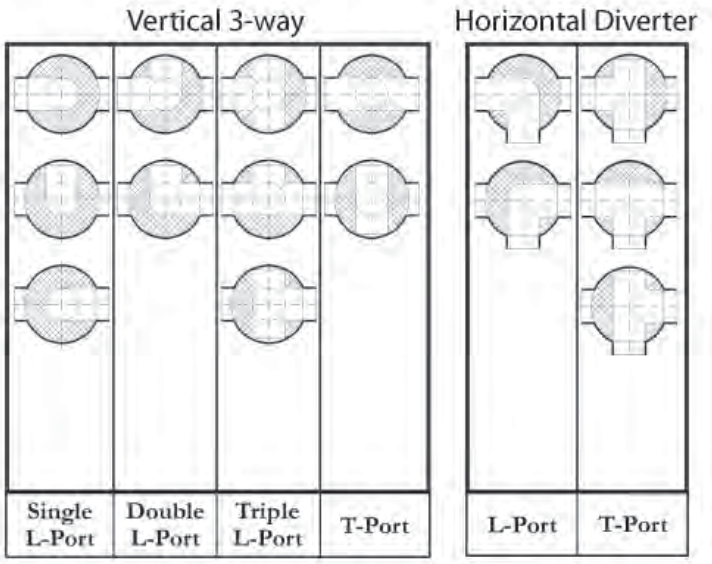

True Union 2000 Actuated Valves

Universal ISO Actuator Mounting Pattern Option

Spears® offers optional actuator mounting with standard ISO Mounting Pattern for user actuation of True Union 2000 Ball Valves.

Factory Actuated Valve Packages

Spears® Electric or Pneumatic Actuation Packages eliminate customer's having to determine proper valve and actuator mating. Pre-matched packages insure proper torque, coupling and mount for optimum performance - all factory installed and tested for proper alignment and operation. Actuation packages can be custom built to user specifications from Spears® wide selection of options, voltages and accessories. Contact Spears® for additional information.

Foot Valve Screens

- Easily converts Ball Check Valve to a Foot Valve.
- Standard IPS spigot connection fits slip-socket valve end connector.
- Enlarged screen provides open area equivalent to valve for optimum flow characteristics.
- Chemical and corrosion resistant PVC or CPVC construction.

Typical Application (VALVE NOT INCLUDED)

Split Nut Kit for True Union 2000 Valves & Union 2000 Schedule 80 Fittings

Split Nut Kits are designed to replace broken union nuts on Spears® True Union 2000 Ball Valves and Union 2000 Schedule 80 Unions. Kit includes SS316 Gear Clamp and 2-Split Nut halves. Can also be used if nut was not in place during end connector installation. Split Nut is fully serviceable to original valve pressure rating.

NOT FOR USE WITH COMPRESSED AIR OR GASES

Spears® Manufacturing Company DOES NOT RECOMMEND the use of thermoplastic products to transport or store compressed air or gas.

Viton® is a registered trademark of DuPont Dow Elastomers

SPEARS® MANUFACTURING COMPANY • CORPORATE OFFICE
15853 Olden St., Sylmar, CA 91342 • PO Box 9203, Sylmar, CA 91392
(818) 364-1611 • www.spearsmfg.com

© Copyright 2008 Spears® Manufacturing Company. All Rights Reserved. Printed in the United States of America 04/08.

Figure # 5083

Brass Mini Ball Valve (1/4”)

Product Features

- 150# WSP / 600# WOG
- Brass Body
- Full Port
- 1/4” FNPT x 1/4” MNPT Ends
- O-Ring Packing
- Chrome Plated ball
- Blowout Proof Stem
- NSF 61 Certified
- CSA Certified 1/2PSI for Natural Gas, Propane & LPG Service

Certified to ANSI/NSF 61

Pressure/Temperature Ratings	
600 PSI from 15F to 160F	150 PSI MAX at 366F

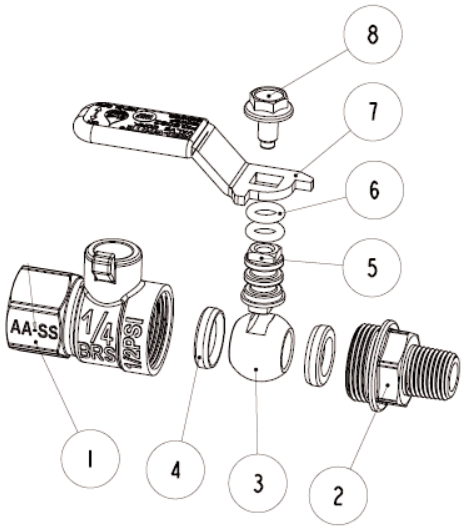

Materials & Specifications

Item	Description	Material	Specification
1	Body	Brass	B283 C37700
2	End Piece	Brass	B283 C37700
3	Ball	Brass/Chrome Plated	B283 C37700
4	Seat	PTFE	PTFE
5	Stem	Brass	B124 C37700
6	O-Ring Packing	Viton	NSF Approved
7	Handle	Zinc plated steel	A36 Dacromet
8	Handle Bolt	Zinc plated steel	A36 Dacromet

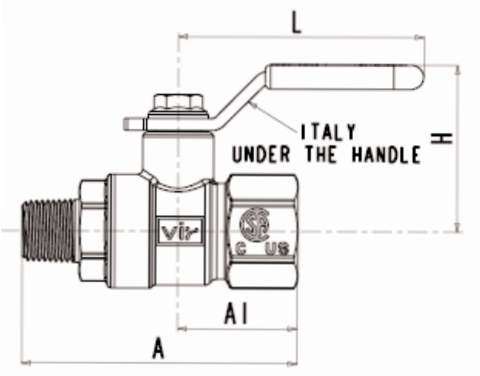

Dimensions, Weights (inches-lbs.) & Valve Data

Size	1/4 x 1/4
A	1.89
A1	.79
C	.45
C1	.45
H	1.09
L	1.61
Ø	1/4-18 FNPT
Ø1	1/4-18 MNPT
P	.31
Wt.- lbs.	.2

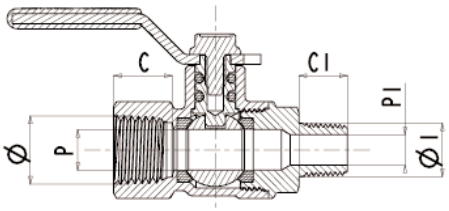

RED-WHITE VALVE CORP. 20600 Regency Lane • Lake Forest, CA 92630

tel: 949.859.1010 • fax: 949.859.7200 • www.redwhitevalvecorp.com

BLOWER SILENCER

STODDARD SILENCERS

MODEL# D-32

Chamber-Absorption Silencers

D32
D32H

Stoddard Silencers, Inc.
1017 Progress Drive • Grayslake, Illinois 60030
Telephone (847) 223-8636 • FAX (847) 223-8638
E-Mail - info @ stoddardsilencersinc.com
Web page - www.stoddardsilencersinc.com

Application

Blower Discharge Silencer for standard silencing at blower speeds above transition speed.

Design

A multi-chamber silencer containing a high frequency absorption device in addition to a special arrangement of volumes and air passageways to effectively reduce both pulsations and excessive high frequencies through the process of converting noise energy into heat. D32 and D32H Silencers may be installed horizontally or vertically. Design parameters permit nozzle orientation to suit installation requirements.

Construction

All welded steel sheet and plate construction for long service life. Acoustic absorption material temperature limits far exceed application temperatures. Exterior surfaces are prime coated. Flanges are drilled to match 125 lb. American Standard Flanges. Inspection openings, mounting brackets, relief valve nozzles or special paint are available at extra charge.

Typical Attenuation Curve

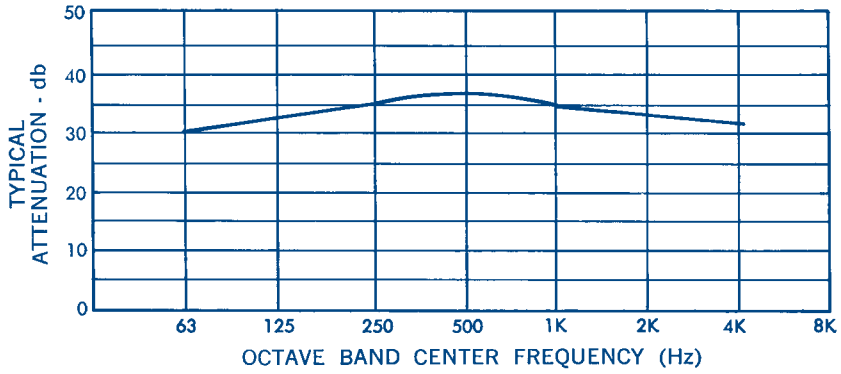

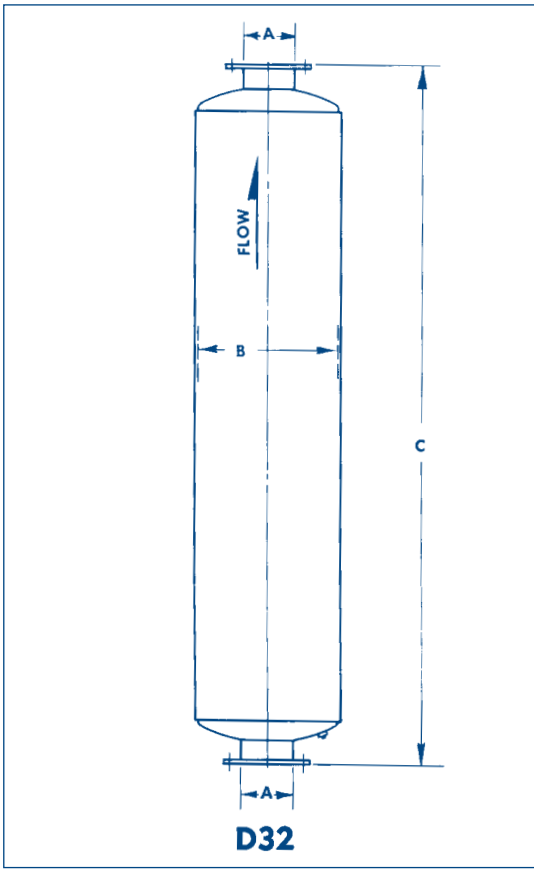

D32

Model	A	B	C	Wt.
D32-4	4	10	45	70
D32-5	5	12	57½	100
D32-6	6	14	64	145
D32-8	8	18	72	240
D32-10	10	22	85	380
D32-12	12	26	98	550
D32-14	14	30	124	848
D32-16	16	46	138	1310
D32-18	18	42	151	1640
D32-20	20	42	175	1928
D32-22	22	48	195	3000
D32-24	24	54	214	3712

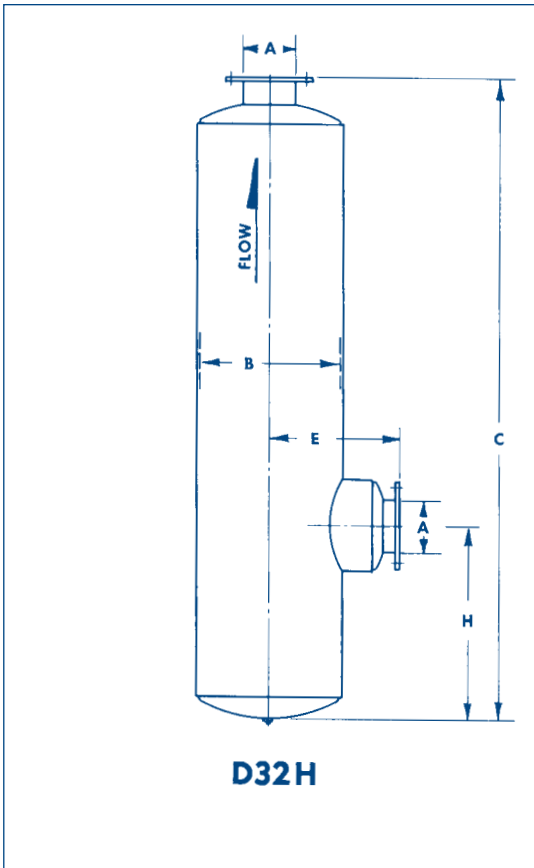

D32H

Model	A	B	C	E	H		Wt.
					Min.	Max.	
D32H-4	4	10	42	12½	7½	16½	75
D32H-5	5	12	55	15½	9	23	115
D32H-6	6	16	61½	17	9	25½	160
D32H-8	8	18	69	21½	12	30½	250
D32H-10	10	22	82	25½	13½	34	410
D32H-12	12	26	95¼	29½	15	39½	580
D32H-14	14	30	121	42	17	34	875
D32H-16	16	36	135	47	19	34	1250
D32H-18	18	42	148	53	21	36	1650
D32H-20	20	42	172	56	22	46	2000
D32H-22	22	48	192	66	24	54	3050
D32H-24	24	54	211	69	26	66	3750

Chamber-Absorption Silencers

D32T

Stoddard Silencers, Inc.
1017 Progress Drive • Grayslake, Illinois 60030
Telephone (847) 223-8636 • FAX (847) 223-8638
E-Mail - info @ stoddardsilencersinc.com
Web page - www.stoddardsilencersinc.com

Application

Blower Discharge Silencer for standard silencing at blower speeds above transition speed.

Design

A multi-chamber silencer containing a high frequency absorption device in addition to a special arrangement of volumes and air passageways to effectively reduce both pulsations and excessive high frequencies through the process of converting noise energy into heat. D32T Silencers are normally installed vertically. Design parameters permit nozzle orientation to suit installation requirements.

Construction

All welded steel sheet and plate construction for long service life. Acoustic absorption material temperature limits far exceed application temperatures. Exterior surfaces are prime coated. Flanges are drilled to match 125 lb. American Standard Flanges. Inspection openings, mounting brackets, relief valve nozzles or special paint are available at extra charge.

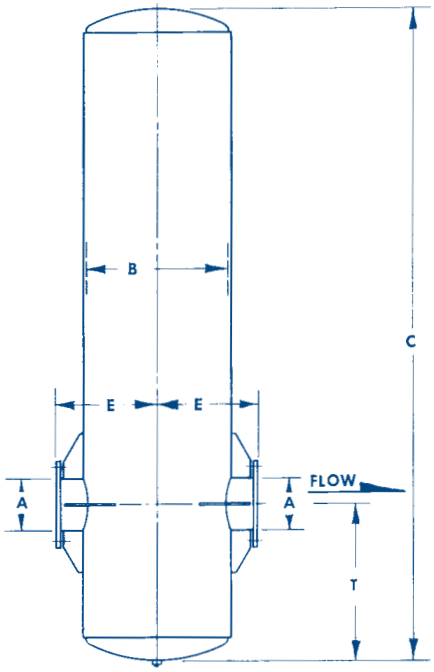

D32T

Typical Attenuation Curve

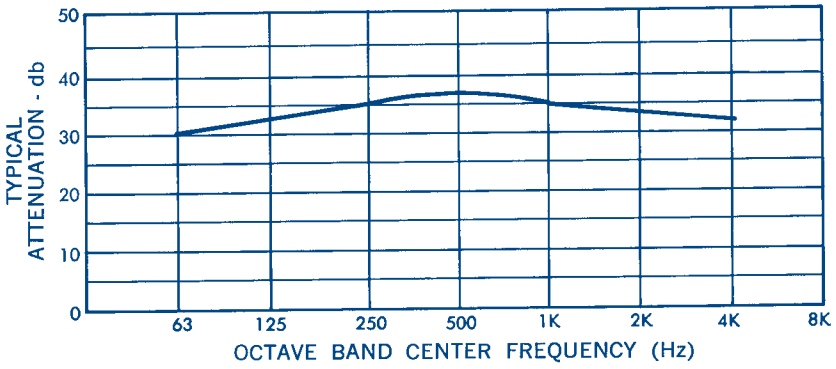

Model	A	B	C	E	T		Wt.
					Min.	Max.	
D32T-8	8	22	73	15	10	16	401
D32T-10	10	26	87	17	12	20	585
D32T-12	12	30	106	19	13	26	980
D32T-14	14	36	120	22	15	30	1300
D32T-16	16	42	134	25	17	34	1799
D32T-18	18	48	147	28	19	38	2540
D32T-20	20	48	171	28	20	40	2898
D32T-22	22	54	185	31	22	44	3444
D32T-24	24	54	203	31	24	48	3978

VES-1000 CFM BLOWER

SOLLECO

MODEL# 718

SOLLECO

VES 1000 CFM BLOWER

GENERAL INFORMATION FOR THE VES 1000

The VES 1000 is used for the remediation of soils with volatile organic compounds (VOC's), which are present.

VES GENERAL DESCRIPTION

The VES contains the following items:
Entrained Liquid Separator – VES Vacuum Pump & 60 H.P. Motor – Electrical Control Panel – Liquid Pump – De-mister Pad – Air to Air Cooler.

Soil vapors are extracted with the vacuum pump through the entrained liquid separator, which removes the majority of the water brought up from the soil during the vacuum extraction process. Vapors are pushed through the carbon.

The VES is described more thoroughly in the technical specification section of this document.

TECHNICAL SPECIFICATIONS

Design Specifications

- **Process Flow:** The VES 1000 can process 1000 SCFM at 10" Hg. vacuum of contaminated air on a continual basis.
- **Process Connection:** (2) 8" flanged connection.

Major Components

- **Entrainment Separator:** The Entrainment Separator is provided to remove water that is brought up during vapor extraction from the vapor stream. It has a tangential inlet that cyclone separates the water from the vapors with 90% efficiency. It also has a de- mister to remove incoming particulate and water vapor. The Entrainment Separator dimensions are 28 inches in diameter x 60 inches tall.

- **Vacuum Pump:** The Vacuum Pump extracts the vapors from the soil and can produce vacuum levels from 1 inch of water to 180 inches of water at the VES blower inlet. The pump is powered by 60 horsepower motor, which is sized to provide enough horsepower to generate the flow required at the specified vacuum level for the VES system.

- **Control Panel:** The NEMA 4 Control Panel contains a main disconnect, on/off switches, lights, fuses, motor starters, relays and wiring.

- **Variable Frequency Inverter:** The control panel utilizes a frequency inverter to vary the speed of the blower.

- **Auto Drain Pump:** A Liquid Pump is provided to remove the water accumulated in the entrainment separator. The pump is activated when the water reaches the high liquid level switch and shuts off when the timer shuts it off. The pump transfers the water to a receptacle provided by the client at the site.

- **Liquid Level Switches:** Liquid Level Switches are provided on the entrainment separator site glass. A High Liquid Level Switch activates the liquid transfer pump when it is triggered. The High/High Liquid Level Switch turns the entire system off when the switch is actuated.

- **Pitot Tube:** A signal from the pitot tube in the process line sends a differential air pressure signal to the magnahelic gauge. This indicates the volumetric flow rate passing through the VES from the vapor extraction wells.

VES SYSTEM WARNINGS

The VES System utilizes high voltages and flammable vapors when in operation it also utilizes many moving parts. All personnel operating the VES System must be trained in the operation and maintenance of the system as well as the safety devices provided with the system.

1. **Do not attempt to bypass any of the safety interlocks provided with the unit in an attempt to operate the unit unless authorized by Solleco personnel.**
2. **Do not modify or bypass the transformers, fuse blocks, in order to make the system operational unless authorized by Solleco personnel.**
3. **Do not remove any equipment from the unit in order to make the unit operational.**
4. **Keep all body parts clear of the exhaust stack, air intake valves and moving parts due to burns and possible serious bodily injury situations that may occur as a result of body contact with these parts.**

5. Do not restrict, block or close the exhaust stack during operation.
6. Disconnect incoming voltage to the unit control panel before attempting to work on the panel or other electrical components on the unit. Use a voltage meter to determine that the power is off. Have only qualified personnel work on the electrical components, preferably a qualified electrician.

SYSTEM INSTALLATION AND START-UP

Follow each step listed here in exactly the order listed. For your safety, do not skip any steps or perform any steps out of order.

Installation:

1. Operate the unit on a level dry surface.
2. Connect the properly rated electrical supply with a ground to the control panel main disconnect using a qualified electrician.
3. Check voltage, wire size and amperage rating of electricity installed, making sure that it matches the manufacturers panel specifications and electrical drawings before proceeding.
4. Check 120-volt power circuit.
5. Check rotation of the VES Blower making sure it is correct.

Start-up Procedures:

1. Verify that the "Main Disconnect Switch" on the control panel is in the "On" position.
2. Turn the main power "On" and check electrical setting is 460 Volt / 3 Phase.
3. Open the system control panel door and have a qualified electrician verify that the voltage at top of the "Main Disconnect" is to 460 Volt / 3 phase.
4. With the control panel door closed and latched, turn the "Main Disconnect" switch to the "On" position.
5. Turn the "Control Power" switch to the "On" position.
6. Turn the "Air Cooler " switch to the "On" position. The Cooler fan should come on.
7. Push the "Blower Start" button and the contactor should engage.
8. Open the panel and push the "Frequency Inverter" Start button.

Once the unit has started the blower speed will be increased or decreased with the frequency inverter located in the panel. When the readout shows 60 Hz the blower is at full speed or 1800 RPM.

System Alarms

1. **High Water Alarm:** Water level is above the high/high level switch in the entrained liquid separator or the air cooler discharge knock-out.
2. **Storage High Water Alarm:** Water level is above the high/high level switch in the storage tank provided by client.
3. **High Air Temperature Alarm:** Air temperature has risen above 200 degrees F on the outlet of the air cooler.
4. **Low Air Flow:** Airflow has fallen below 250 CFM.
5. **High Air Flow:** Airflow has risen above 1200 CFM.

MAINTENANCE SHEDULE

- Check VES Blower — **Monthly**
  (Maintenance procedure in the Roots product bulletins)
- Grease Motor fittings — **Monthly**
  (Use grease gun on zirk fittings; give two pumps to the fittings)
- Check Panel Wire connections — **Monthly**
  (Tighten them if necessary)
- Check Entrainment Separator De-Mister — **Tri-Yearly**
  (Remove Entrainment Separator lid, clean or replace as needed)
- Clean out Entrainment Separators — **As Needed**
  (Use clean water to rinse sides and remove hand clean out for debris)
- Check level switches — **Monthly**
  (Insure proper operation)
- Check cooling fan on VES enclosure — **Monthly**
  (Insure proper operation)
- Check cooling fan operation — **Monthly**
  (Insure proper operation)

WIRING SCHEMATIC

BLOWER SKID SYSTEM

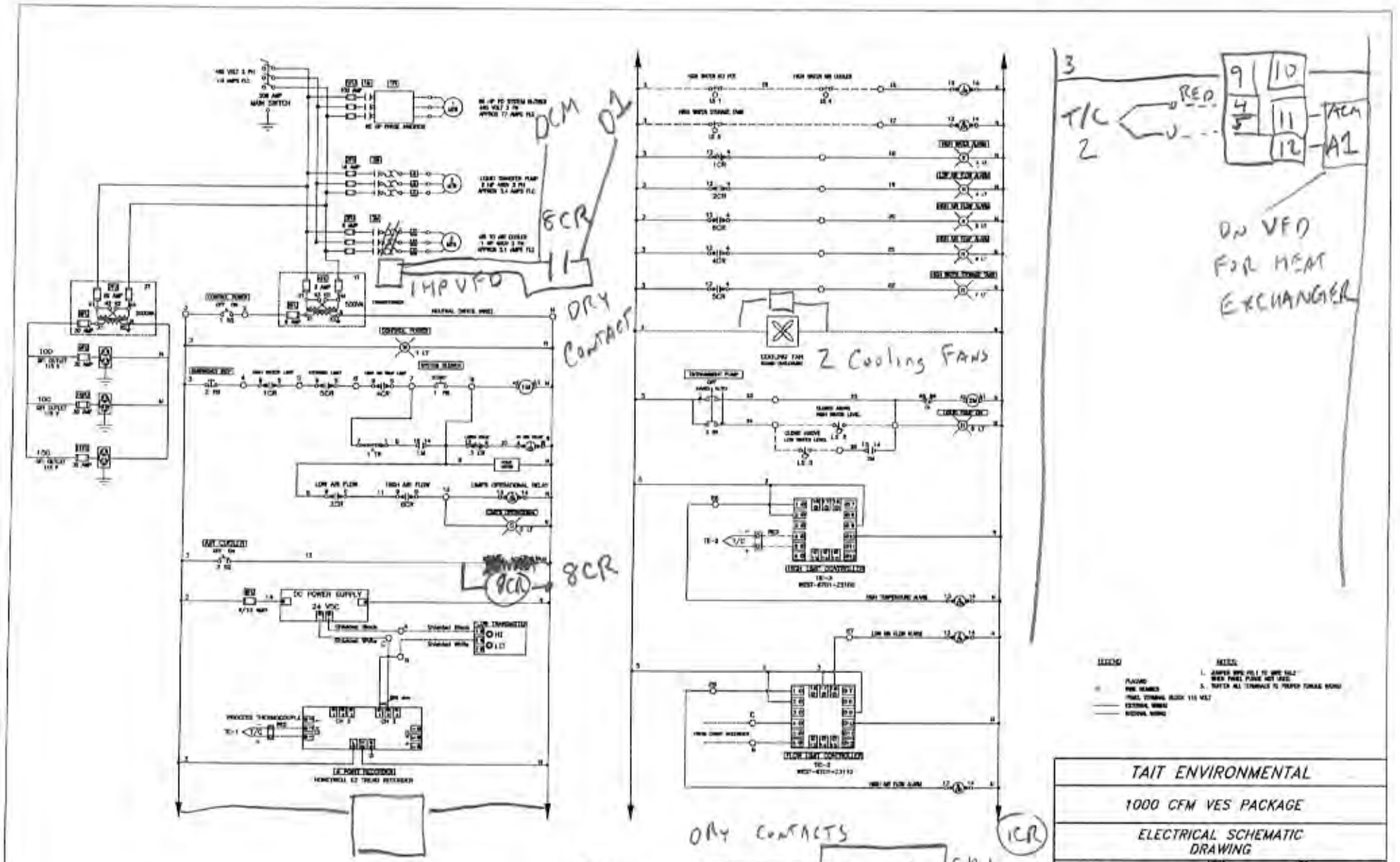
DCM
01
8CR
1MP VFD
DRY CONTACT
2 Cooling FANS
8CR
DC POWER SUPPLY
24 VDC
TELEMETRY
DRY CONTACTS
CH 1
CH 2
CH 3
CH 4
1CR
4CR
6CR
T/C 2
RED
9
10
4
5
11
12
TCM
A1
ON VFD FOR HEAT EXCHANGER
TAIT ENVIRONMENTAL
1000 CFM VES PACKAGE
ELECTRICAL SCHEMATIC DRAWING
Soleco
Thermal Process Equipment
1000 VES-M321
1

BLOWER PACKAGE

ROOTS URAI

POSITIVE DISPLACEMENT BLOWER

MODEL #718

Roots™ URAI -- 718

from Dresser ROOTS

See More Product Information: PDF

Specifications

Applications / Use	Pressure Blower
Environment	Clean; Dirty
Performance Specifications	
Air Flow Rate	470 to 2370 SCFM
Static Pressure Range	28 to 166 in H2O
Fan / Blower Diameter	8.0 inch
Notes	Heavy duty rotary blower with detachable rugged steel mounting feet

Similar Products

(See all Suppliers)

MOFFITT CORPORATION

7100-7300 Series Belt Drive Fan Panel -- 20" (Level 1)
from Moffitt Corporation
• Size/Diameter: 12" - 120" • CFM Range: 500 – 100,000 + • 7300...[See More]

Applications / Use: Ventilation
Product Form: Packaged
Draft: Forced Draft

VERANTIS

Axial Fan -- FL
from Verantis
Capacities from 100 CFM to 110,000 CFM at static pressures up to 2.5" WC. 11 sizes available fro...[See More]

Applications / Use: Ventilation
Product Form: Packaged
Draft: Induced Draft

3314 -- 600-3314
from Allied Electronics, Inc.
Trendsetting with innovative technologies. Listening to customers' needs. Developing new ideas to me...[See More]

Applications / Use: Ventilation
Environment: Clean
Air Flow Rate (SCFM): 47 SCFM

BLOWERS EXHAUSTERS COMPRESSORS

ROOTS™

US $3.00, Canada $4.50

UNIVERSAL RAI® & RAM™ SERIES

CONTENTS

INFORMATION SUMMARY 1

SAFETY PRECAUTIONS 2

OPERATING LIMITATIONS 2

INSTALLATION 3

LUBRICATION 6

OPERATION 7

OPERATING CHARACTERISTICS 8

TROUBLESHOOTING 9

MAINTENANCE/REPLACEMENTS
UNIVERSAL RAI® SERIES BLOWERS 10
RAM™ SERIES BLOWERS 14

FIGURES 18

TABLES 22

ASSEMBLY DRAWINGS 26

PARTS LIST 31

DO THESE THINGS TO GET THE MOST FROM YOUR ROOTS™ BLOWER

- ❑ Check shipment for damage. If found, file claim with carrier and notify ROOTS.
- ❑ Unpack shipment carefully, and check contents against Packing List. Notify ROOTS if a shortage appears.
- ❑ Store in a clean, dry location until ready for installation. Lift by methods discussed under INSTALLATION to avoid straining or distorting the equipment. Keep covers on all openings. Protect against weather and corrosion if outdoor storage is necessary.
- ❑ Read OPERATING LIMITATIONS and INSTALLATION sections in this manual and plan the complete installation.
- ❑ Provide for adequate safeguards against accidents to persons working on or near the equipment during both installation and operation. See SAFETY PRECAUTIONS.
- ❑ Install all equipment correctly. Foundation design must be adequate and piping carefully done. Use recommended accessories for operating protection.
- ❑ Make sure both driving and driven equipment is correctly lubricated before start-up. See LUBRICATION.
- ❑ Read starting check points under OPERATION. Run equipment briefly to check for installation errors and make corrections. Follow with a trial run under normal operating conditions.
- ❑ In event of trouble during installation or operation, do not attempt repairs of ROOTS furnished equipment. Notify ROOTS, giving all nameplate information plus an outline of operating conditions and a description of the trouble. Unauthorized attempts at equipment repair may void ROOTS warranty.
- ❑ Units out of warranty may be repaired or adjusted by the owner. It is recommended that such work be limited to the operations described in this manual, using ROOTS™ parts. Good inspection and maintenance practices should reduce the need for repairs.

NOTE: Information in this manual is correct as of the date of publication. ROOTS reserves the right to make design or material changes without notice, and without obligation to make similar changes on equipment of prior manufacture.

For your nearest ROOTS Office, dial our Customer Service Hot Line toll free; 1 877 363 ROOT(S) (7668) or direct 281-966-4700.

DRESSER®
Roots

IRB-180-102
Rev. 12/02

ROOTS™ products are sold subject to the current General terms of Sale, GTS-5001 and Warranty Policy WP-5020. Copies are available upon request.
Contact your local ROOTS Office or ROOTS Customer Service Hot Line 1.877.363.ROOT(S) (7668).

SAFETY PRECAUTIONS

It is important that all personnel observe safety precautions to minimize the chances of injury. Among many considerations, the following should be particularly noted:

- Blower casing and associated piping or accessories may become hot enough to cause major skin burns on contact.
- Internal and external rotating parts of the blower and driving equipment can produce serious physical injuries. Do not reach into any opening in the blower while it is operating, or while subject to accidental starting. Protect external moving parts with adequate guards.
- Disconnect power before doing any work, and avoid bypassing or rendering inoperative any safety or protective devices.
- If blower is operated with piping disconnected, place a strong coarse screen over the inlet and avoid standing in the discharge air stream. **CAUTION: Never cover the blower inlet with your hand or other part of body.**
- Stay clear of open inlet piping (suction area) of pressure blowers, and the open discharge blast from vacuum blowers.
- Stay clear of the blast from pressure relief valves and the suction area of vacuum relief valves.
- Use proper care and good procedures in handling, lifting, installing, operating and maintaining the equipment.
- Casing pressure must not exceed 25 PSI (1725 mbar) gauge. Do not pressurize vented cavities from an external source, nor restrict the vents without first consulting ROOTS.
- Do not use air blowers on explosive or hazardous gases.
- Other potential hazards to safety may also be associated with operation of this equipment. All personnel working in or passing through the area should be trained to exercise adequate general safety precautions.

OPERATING LIMITATIONS

A ROOTS™ blower or exhauster must be operated within certain approved limiting conditions to enable continued satisfactory performance. Warranty is contingent on such operation.

Maximum limits for pressure, temperature and speed are specified in TABLE 1 for various models & sizes of blowers & exhausters. These limits apply to all units of normal construction, when operated under standard atmospheric conditions. Be sure to arrange connections or taps for thermometers and pressure or vacuum gauges at or near the inlet and discharge connections of the unit. These, along with a good tachometer, will enable periodic checks of operating conditions.

PRESSURE – The pressure rise, between inlet and discharge, must not exceed the figure listed for the specific unit frame size concerned. Also, in any system where the unit inlet is at a positive pressure above atmosphere a maximum case rating of 25 PSI gauge (1725 mbar) should not be exceeded without first consulting the ROOTS. Never should the maximum allowable differential pressure be exceeded.

On vacuum service, with the discharge to atmospheric pressure, the inlet suction or vacuum must not be greater than values listed for the specific frame size.

TEMPERATURE – Blower & exhauster frame sizes are approved only for installations where the following temperature limitations can be maintained in service:

- Measured temperature rise must not exceed listed values when the inlet is at ambient temperature. Ambient is considered as the general temperature of the space around the unit. This is not outdoor temperature unless the unit is installed outdoors.
- If inlet temperature is higher than ambient, the listed allowable temperature rise values must be **reduced** by 2/3 of the difference between the actual measured inlet temperature and the ambient temperature.
- The average of the inlet and discharge temperature must not exceed 250°F. (121°C).

SPEED – These blowers & exhausters may be operated at speeds up to the maximum listed for the various frame sizes. They may be direct coupled to suitable constant speed drivers if pressure/temperature conditions are also within limits. At low speeds, excessive temperature rise may be a limiting factor.

Special Note: The listed maximum allowable temperature rise for any particular blower & exhauster may occur well before its maximum pressure or vacuum rating is reached. This may occur at high altitude, low vacuum or at very low speed. The units' operating limit is always determined by the maximum rating reached first. It can be any one of the three: Pressure, Temperature or Speed.

INSTALLATION

ROOTS™ blowers & exhausters are treated after factory assembly to protect against normal atmospheric corrosion. The maximum period of internal protection is considered to be one year under average conditions, if shipping plugs & seals are not removed. Protection against chemical or salt water atmosphere is not provided. Avoid opening the unit until ready to start installation, as corrosion protection will be quickly lost due to evaporation.

If there is to be an extended period between installation and start up, the following steps should be taken to ensure corrosion protection.

- ❑ Coat internals of cylinder, gearbox and drive end bearing reservoir with Nox-Rust VCI-10 or equivalent. Repeat once a year or as conditions may require. Nox-Rust VCI-10 is petroleum soluble and does not have to be removed before lubricating. It may be obtained from Daubert Chemical Co., 2000 Spring Rd., Oak Brook, Ill. 60521.
- ❑ Paint shaft extension, inlet and discharge flanges, and all other exposed surfaces with Nox-Rust X-110 or equivalent.
- ❑ Seal inlet, discharge, and vent openings. It is not recommended that the unit be set in place, piped to the system, and allowed to remain idle for extended periods. If any part is left open to the atmosphere, the Nox-Rust VCI-10 vapor will escape and lose its effectiveness.
- ❑ Protect units from excessive vibration during storage.
- ❑ Rotate shaft three or four revolutions every two weeks.
- ❑ Prior to start up, remove flange covers on both inlet and discharge and inspect internals to insure absence of rust. Check all internal clearances. Also, at this time, remove gearbox and drive end bearing cover and inspect gear teeth and bearings for rust.

Because of the completely enclosed unit design, location of the installation is generally not a critical matter. A clean, dry and protected indoor location is preferred. However, an outdoor location will normally give satisfactory service. Important requirements are that the correct grade of lubricating oil be provided for expected operating temperatures, and that the unit be located so that routine checking and servicing can be performed conveniently. Proper care in locating driver and accessory equipment must also be considered.

Supervision of the installation by a ROOTS Service Engineer is not usually required for these units. Workmen with experience in installing light to medium weight machinery should be able to produce satisfactory results. Handling of the equipment needs to be accomplished with care, and in compliance with safe practices. Unit mounting must be solid, without strain or twist, and air piping must be clean, accurately aligned and properly connected.

Bare-shaft Units: Two methods are used to handle a unit without base. One is to use lifting lugs bolted into the top of the unit headplates. Test them first for tightness and fractures by tapping with a hammer. In lifting, keep the direction of cable pull on these bolts as nearly vertical as possible. If lifting lugs are not available, lifting slings may be passed under the cylinder adjacent to the headplates. Either method prevents strain on the extended drive shaft.

Packaged Units: When the unit is furnished mounted on a baseplate, with or without a driver, use of lifting slings passing under the base flanges is required. Arrange these slings so that no strains are placed on the unit casing or mounting feet, or on any mounted accessory equipment. **DO NOT** use the lifting lugs in the top of the unit headplates.

Before starting the installation, remove plugs, covers or seals from unit inlet and discharge connections and inspect the interior completely for foreign material. If cleaning is required, finish by washing the cylinder, headplates and impeller thoroughly with a petroleum solvent. Turn the drive shaft by hand to make sure that the impellers turn freely at all points. Anti-rust compound on the connection flanges and drive shaft extension may also be removed at this time with the same solvent. Cover the flanges until ready to connect piping.

Mounting

Care will pay dividends when arranging the unit mounting. This is especially true when the unit is a “bare-shaft” unit furnished without a baseplate. The convenient procedure may be to mount such a unit directly on a floor or small concrete pad, but this generally produces the least satisfactory results. It definitely causes the most problems in leveling and alignment and may result in a “Soft Foot” condition. Correct soft foot before operation to avoid unnecessary loading on the casing and bearings. Direct use of building structural framing members is not recommended.

For blowers without a base, it is recommended that a well anchored and carefully leveled steel or cast iron mounting plate be provided. The plate should be at

©2002 Dresser, Inc. all rights reserved.
ROOTS, RAM, URAI and WHISPAIR are trademarks of Dresser, Inc.
Dresser Design and Universal RAI are registered trademarks of Dresser, Inc.

least 1 inch (25 mm) thick, with its top surface machined flat, and large enough to provide leveling areas at one side and one end after the unit is mounted. It should have properly sized studs or tapped holes located to match the unit foot drilling. Proper use of a high quality machinist's level is necessary for adequate installation.

With the mounting plate in place and leveled, set the unit on it without bolting and check for rocking. If it is not solid, determine the total thickness of shims required under one foot to stop rocking. Place half of this under each of the diagonally-opposite short feet, and tighten the mounting studs or screws. Rotate the drive shaft to make sure the impellers turn freely. If the unit is to be direct coupled to a driving motor, consider the height of the motor shaft and the necessity for it to be aligned very accurately with the unit shaft. Best unit arrangement is directly bolted to the mounting plate while the driver is on shims of at least 1/8 inch (3mm) thickness. This allows adjustment of motor position in final shaft alignment by varying the shim thickness.

Aligning

When unit and driver are factory mounted on a common baseplate, the assembly will have been properly aligned and is to be treated as a unit for leveling purposes. Satisfactory installation can be obtained by setting the baseplate on a concrete slab that is rigid and free of vibration, and leveling the top of the base carefully in two directions so that it is free of twist. The slab must be provided with suitable anchor bolts. The use of grouting under and partly inside the leveled and shimmed base is recommended.

It is possible for a base-mounted assembly to become twisted during shipment, thus disturbing the original alignment. For this reason, make the following checks after the base has been leveled and bolted down. Disconnect the drive and rotate the unit shaft by hand. It should turn freely at all points. Loosen the unit foot hold-down screws and determine whether all feet are evenly in contact with the base. If not, insert shims as required and again check for free impeller rotation. Finally, if unit is direct coupled to the driver, check shaft and coupling alignment carefully and make any necessary corrections.

In planning the installation, and before setting the unit, consider how piping arrangements are dictated by the unit design and assembly. Drive shaft rotation must be established accordingly and is indicated by an arrow near the shaft.

Typical arrangement on vertical units has the drive shaft at the top with counterclockwise rotation and discharge to the left. Horizontal units are typically arranged with the drive shaft at the left with counterclockwise rotation and discharge down. See Figure 3 and 4 for other various unit arrangements and possible conversions.

When a unit is DIRECT COUPLED to its driver, the driver RPM must be selected or governed so as not to exceed the maximum speed rating of the unit. Refer to Table 1 for allowable speeds of various unit sizes. A flexible type coupling should always be used to connect the driver and unit shafts.

Coupling halves must be accurately aligned, and a sufficient gap between shaft ends provided so that side strains and end thrust on either shaft are avoided or minimized. This will require considerable care in the mounting of the driver. The two shafts must be in as near perfect alignment in all directions as possible, and the gap must be established with the motor armature on its electrical center if end-play exists.

The following requirements of a good installation are recommended. Coupling halves must be fitted to the two shafts with a line to line thru .001" interference fit. Coupling halves must be warmed up, so that only light tapping is required to install them. Maximum deviation in offset alignment of the shafts should not exceed .005" (.13 mm) total indicator reading, taken on the two coupling hubs. Maximum deviation from parallel of the inside coupling faces should not exceed .001" (.03 mm) when checked at six points around the coupling.

When a unit is BELT DRIVEN, the proper selection of sheave diameters will result in the required unit speed. This flexibility can lead to operating temperature problems caused by unit speed being too low. Make sure the drive speed selected is within the allowable range for the specific unit size, as specified under Table 1.

Belt drive arrangements usually employ two or more V-belts running in grooved sheaves. Installation of the driver is less critical than for direct coupling, but its shaft must be level and parallel with the unit shaft. **The driver should be mounted on the inlet side of a vertical unit (horizontal piping) and on the side nearest to the shaft on a horizontal unit.** The driver must also be mounted on an adjustable base to permit installing, adjusting and removing the V-belts. To position the driver correctly, both sheaves need to be mounted on their shafts and the nominal shaft center distance known for the belt lengths to be used.

Install the unit sheave so that its inner hub face is not more than 1/8 inch (3mm) from the drive end cover. See page 18 for minimum sheave diameter and maximum sheave width. The shaft fit should be such that the sheave can be worked into place by hand or by very light tapping. A tight or driving fit can damage a bearing, and may cause internal unit damage by forcing the impeller out of its normal operating position. A loose fit or wobbly sheave will cause vibration, and may result in shaft breakage.

CAUTION: Couplings as well as sheave bushings must have a slight slide fit with the unit shaft such that they can be installed in place by hand. Any force used to install them could change unit end clearance resulting in unit damage. If interference fit is desired for the coupling, the coupling hub should be heated and shrunk on the shaft. For engine drives, use "locktite" between the coupling hubs and the shafts and on the threads of the coupling set screws.

The driver sheave should also be mounted as close to its bearing as possible, and again should fit the shaft correctly. Position the driver on its adjustable base so that 2/3 of the total movement is available in the direction away from the unit, and mount the assembly so that the face of the sheave is accurately in line with the unit sheave. This position minimizes belt wear, and allows sufficient adjustment for both installing and tightening the belts. After belts are installed, adjust their tension in accordance with the manufacturer's instructions. However, only enough tension should be applied to prevent slippage when the unit is operating under load. Excessive tightening can lead to early bearing failures or shaft breakage.

Before operating the drive under power to check initial belt tension, first remove covers from the unit connections. Make sure the interior is still clean, then rotate the shaft by hand. Place a coarse screen over the inlet connection to prevent anything being drawn into the unit while it is operating, and avoid standing in line with the discharge opening. Put oil in the sumps per instructions under **LUBRICATION.**

Piping

Before connecting piping, remove any remaining anti-rust compound from Unit connections. Clean pipe should be no smaller than unit connections. In addition, make sure it is free of scale, cuttings, weld beads, or foreign material of any kind. To further guard against damage to the unit, especially when an inlet filter is not used, install a substantial screen of 16 mesh backed with hardware cloth at or near the inlet connections. Make provisions to clean this screen of collected debris after a few hours of operation. It should be removed when its usefulness has ended, as the wire will eventually deteriorate and small pieces going into the unit may cause serious damage.

Pipe flanges or male threads must meet the unit connections accurately and squarely. DO NOT attempt to correct misalignment by springing or cramping the pipe. In most cases this will distort the unit casing and cause impeller rubbing. In severe cases it can prevent operation or result in a broken drive shaft. For similar reasons, piping should be supported near the unit to eliminate dead weight strains. Also, if pipe expansion is likely to occur from temperature change, installation of flexible connectors or expansion joints is advisable.

Figure 2 represents an installation with all accessory items that might be required under various operating conditions. Inlet piping should be completely free of valves or other restrictions. When a shut-off valve can not be avoided, make sure a full size vacuum relief is installed nearest the unit inlet. This will protect against unit overload caused by accidental closing of the shut-off valve.

Need for an inlet silencer will depend on unit speed and pressure, as well as sound-level requirements in the general surroundings. An inlet filter is recommended, especially in dusty or sandy locations. A discharge silencer is also normally suggested, even though Whispair units operate at generally lower noise levels than conventional rotary blowers. Specific recommendations on silencing can be obtained from ROOTS.

Discharge piping requires a pressure relief valve, and should include a manual unloading valve to permit starting the unit under no-load conditions. Reliable pressure/vacuum gauges and good thermometers at both inlet and discharge are recommended to allow making the important checks on unit operating conditions. The back-pressure regulator shown in Figure 2 is useful mainly when volume demands vary while the unit operates at constant output. If demand is constant, but somewhat lower than the unit output, excess may be blown off through the manual unloading valve.

In multiple unit installations where two or more units operate with a common header, use of check valves is mandatory. These should be of a direct acting or free swinging type, with one valve located in each line between the unit and header. Properly installed, they will protect against damage from reverse rotation caused by air and material back-flow through an idle unit.

After piping is completed, and before applying power, rotate the drive shaft by hand again. If it does not move with uniform freedom, look for uneven mounting, piping strain, excessive belt tension or coupling misalignment.

DO NOT operate the unit at this time unless it has been lubricated per instructions.

©2002 Dresser, Inc. all rights reserved.
ROOTS, RAM, URAI and WHISPAIR are trademarks of Dresser, Inc.
Dresser Design and Universal RAI are registered trademarks of Dresser, Inc.

LUBRICATION

LUBRICATION: For Units with a Grease Lubricated Drive End

A simple but very effective lubrication system is employed on the drive shaft end bearings. Hydraulic pressure relief fittings are provided to vent any excess grease, preventing pressure build-up on the seals. A restriction plug and metering orifice prevent loss of lubricant from initial surges in lubricant pressure but permit venting excess lubricant under steadily rising pressures.

When servicing drive end bearings, use a NLGI #2 premium grade grease with 300°F (149°C) service temperature and moisture resistance and good mechanical stability. Using a pressure gun, slowly force new lubricant into each drive end bearing housing until traces of clean grease comes out of the relief fitting.

After a long shutdown, it is recommended that the grease fittings be removed, the old grease flushed out with kerosene or #10 lubricating oil, drained thoroughly, and bearings refilled with new grease. Be sure grease relief fittings are reinstalled. Grease should be added using a hand operated grease gun to the drive end bearings at varying time intervals depending on duty cycle and RPM. Table 4 has been prepared as a general greasing schedule guide based on average operating conditions. More frequent intervals may be necessary depending on the grease operating temperature and unusual circumstances. ROOTS™ synthetic grease (ROOTS P/N T20019-) is highly recommended.

LUBRICATION: For Units with Splash Lubrication on Both Ends

Bearings and oil seals are lubricated by the action of the timing gears or oil slingers which dip into the main oil sumps causing oil to splash directly on gears and into bearings and seals. A drain port is provided below each bearing to prevent an excessive amount of oil in the bearings. Seals located inboard of the bearings in each headplate effectively retain oil within the sumps. Any small leakage that may occur should the seals wear passes into a cavity in each vented headplate and is drained downward.

Oil sumps on each end of the blower are filled by removing top vent plugs, Item (21), and filling until oil reaches the middle of the oil level sight gauge, Item (37), or the overflow plug.

Initial filling of the sumps should be accomplished with the blower not operating, in order to obtain the correct oil level. Approximate oil quantities required for blowers of the various models and configurations are listed in Table 3. Use a good grade of industrial type non-detergent, rust inhibiting, anti-foaming oil and of correct viscosity per Table 2. ROOTS™ synthetic oil (ROOTS P/N 813-106-) is highly recommended.

The oil level should not fall below the middle of the site gauge when the blower is idle. It may rise on the gauge during operation, to an extent depending somewhat on oil temperature and blower speed.

Proper lubrication is usually the most important single consideration in obtaining maximum service life and satisfactory operation from the unit. Unless operating conditions are quite severe, a weekly check of oil level and necessary addition of lubricant should be sufficient. During the first week of operation, check the oil levels in the oil sumps about once a day, and watch for leaks. Replenish as necessary. Thereafter, an occasional check should be sufficient. It is recommended that the oil be changed after initial 100 hours of operation. Frequent oil changing is not necessary unless the blower is operated in a very dusty location. Normal life expectancy of petroleum based oils is about 2000 hours with an oil temperature of about 200°F (93°C). As the oil temperature increases by increments of 15-18°F (8°C - 10°C), the life is reduced by half. Example: Oil temperatures of 230-236°F (110°C - 113°C) will produce life expectancy of 1/4 or 500 hours. Therefore, it is considered normal to have oil change periods of 500 hours with petroleum based oils.

OPERATION

Before operating a blower under power for the first time, recheck the unit and the installation thoroughly to reduce the likelihood of avoidable troubles. Use the following procedure check list as a guide, but consider any other special conditions in the installation.

- ❑ Be certain that no bolts, tools, rags, or debris have been left in the blower air chamber or piping.
- ❑ If an outdoor intake without filter is used, be sure the opening is located so it cannot pick up dirt and is protected by a strong screen or grille. Use of the temporary protective screen as described under INSTALLATION is strongly recommended.
- ❑ Recheck blower leveling, drive alignment and tightness of all mounting bolts if installation is not recent. If belt drive is used, adjust belt tension correctly.
- ❑ Turn drive shaft by hand to make sure impellers still rotate without bumping or rubbing at any point.
- ❑ Make sure oil levels in the main oil sumps are correct.
- ❑ Check lubrication of driver. If it is an electric motor, be sure that power is available and that electrical overload devices are installed and workable.
- ❑ Open the manual unloading valve in the discharge air line. If a valve is in the inlet piping, be sure it is open.
- ❑ Bump blower a few revolutions with driver to check that direction of rotation agrees with arrow near blower shaft, and that both coast freely to a stop.

After the preceding points are cleared, blower is ready for trial operation under “no-load” conditions. The following procedure is suggested to cover this initial operation test period.

a. Start blower, let it accelerate to full speed, then shut off. Listen for knocking sounds, both with power on and as speed slows down.

b. Repeat above, but let blower run 2 or 3 minutes. Check for noises, such as knocking sounds.

c. Operate blower for about 10 minutes unloaded. Check oil levels. Observe cylinder and headplate surfaces for development of hot spots such as burned paint, indicating impeller rubs. Be aware of any noticeable increase in vibration.

Assuming that all trials have been satisfactory, or that necessary corrections have been made, the blower should now have a final check run of at least one hour under normal operating conditions. After blower is restarted, gradually close the discharge unloading valve to apply working pressure. At this point it is recommended that a good pressure gauge or manometer be connected into the discharge line if not already provided, and that thermometers be in both inlet and discharge lines. Readings from these instruments will show whether pressure or temperature ratings of the blower are being exceeded.

During the final run, check operating conditions frequently and observe the oil levels at reasonable intervals. If excessive noise or local heating develops, shut down immediately and determine the cause. If either pressure rise or temperature rise across the blower exceeds the limit specified in this manual, shut down and investigate conditions in the piping system. Refer to the **TROUBLESHOOTING CHECKLIST** for suggestions on various problems that may appear.

The blower should now be ready for continuous duty operation at full load. During the first few days make periodic checks to determine whether all conditions remain steady, or at least acceptable. This may be particularly important if the blower is supplying air to a process system where conditions can vary. At the first opportunity, stop the blower and clean the temporary inlet protective screen. If no appreciable amount of debris has collected, the screen may be removed. See comments under **INSTALLATION**. At this same time, verify leveling, coupling alignment or belt tension, and mounting bolt tightness.

Should operating experience prove that blower capacity is a little too high for the actual air requirements, a small excess may be blown off continuously through the manual unloading or vent valve. Never rely on the pressure relief valve as an automatic vent. Such use may cause the discharge pressure to become excessive, and can also result in failure of the valve itself. If blower capacity appears to be too low, refer to the **TROUBLESHOOTING CHECKLIST**.

Vibration Assessment Criteria

With measurements taken at the bearing locations on the housings, see chart below for an appropriate assessment guide for rotary lobe blowers rigidly mounted on stiff foundations.

In general, blower vibration levels should be monitored on a regular basis and the vibration trend observed for progressive or sudden change in level. If such a change occurs, the cause should be determined through spectral analysis.

As shown on the chart below, the level of all pass vibration will determine the need to measure discrete frequency vibration levels and the action required.

All Pass Vibration (in/sec)	Discrete Frequency Vibration (in/sec)	Action
0.45 or less	N/R	Approved
Greater than 0.45 but 1.0 or less	0.45 or less @ any frequency	Approved
	Greater than 0.45 @ any frequency	ROOTS™ Approval Required
Greater than 1.0	Less than 1.0	ROOTS™ Approval Required
	Greater than 1.0	ROOTS™ Approval Required

©2002 Dresser, Inc. all rights reserved.
ROOTS, RAM, URAI and WHISPAIR are trademarks of Dresser, Inc.
Dresser Design and Universal RAI are registered trademarks of Dresser, Inc.

OPERATING CHARACTERISTICS

ROOTS™ rotary blowers and exhausters, as covered in this manual, are available in basic frame sizes ranging from 2 inch to 7 inch gear diameter. Various models, within this gear diameter range, are available with different case lengths to produce reasonable steps in flow capacity. The shorter case lengths have lower volumetric capacities, but are capable of operating against higher pressures. All models are available for air service and there are specifically designed models for gas service.

The basic ROOTS™ rotary lobe blower is a positive displacement type unit. Flow capacity is determined by frame size, operating speed and pressure conditions. It employs two impellers mounted on parallel shafts rotating in opposite directions within a cylinder closed at the ends by head-plates. As the impellers rotate, gas is drawn into one side of the cylinder and forced out the opposite side. The pressure or vacuum developed depends on the resistance of the piping and process system.

The unit is a precision engineered product with very fine clearances between the rotating impellers and stationary case. Since there is no actual contact between these surfaces, internal lubrication is not required. Clearances are maintained by a pair of accurately machined timing gears, mounted on the two shafts extended outside the blower casing.

Operation of the familiar basic rotary lobe blower is illustrated in FIGURE 1, where air flow is left to right from inlet to discharge with the top impeller rotating clockwise. In Position 1 it is delivering a known volume (B) to the discharge, while space (A) between the lower impeller and cylinder wall is being filled. Counterclockwise rotation of this impeller then traps equal volume (A) in Position 2, and further rotation delivers it to the discharge in Position 3.

One complete revolution of the driving shaft alternately traps four fixed and equal volumes of air (two by each impeller) and pushes them through to the discharge. The volume capacity of a lobe blower operating at a constant speed therefore remains relatively independent of reasonable inlet of discharge pressure variations. To change capacity, it is necessary either to change speed of rotation or blow off some of the discharge air.

No attempt should ever be made to control capacity by means of a throttle valve in the intake or discharge piping. This will not only increase the power load on the driver, but can also overload and seriously damage the blower. If a possibility does exist that flow to the blower inlet may be cut off during normal operation of a process, then an adequate vacuum relief valve must be installed near the blower. A pressure type relief valve in the discharge line near the blower is required for protection against cut-off or blocking in this line. Refer to FIGURE 3 for a complete piping schematic.

When a belt drive is installed, blower speed can usually be adjusted to obtain desired capacity by changing the diameter of one or both sheaves. In a direct coupled arrangement a variable speed motor or transmission is required, or excess air may be blown off through a manually controlled unloading valve and silencer. If returned to the blower inlet, the air must be cooled to 100°F (38°C) through a by-pass arrangement to maintain acceptable blower temperatures.

Before making any change in blower capacity, or operating conditions, contact ROOTS for specific information applying to your particular blower. In all cases, operating conditions must be maintained within the approved range of pressures, temperatures and speeds as stated under **LIMITATIONS.** The air blower must not be used to handle liquids or solids as serious damage to the rotating parts may result.

FIGURE 1 – FLOW THROUGH A BASIC ROTARY LOBE BLOWER

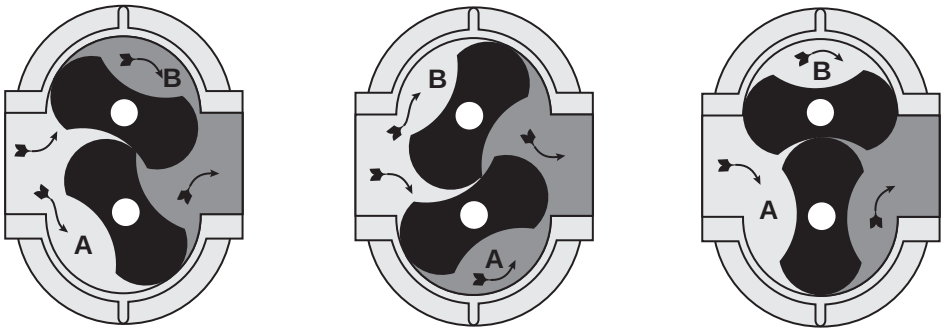

POSITION 1 **POSITION 2** **POSITION 3**

TROUBLESHOOTING

Trouble	Item	Possible Cause	Remedy
No flow	1	Speed too low	Check by tachometer and compare with published performance
	2	Wrong rotation	Compare actual rotation with Figure 1 or 2 Change driver if wrong
	3	Obstruction in piping	Check piping, valves, silencer to assure open flow path
Low capacity	4	Speed too low	See item 1, If belt drive, check for slippage and readjust tension
	5	Excessive pressure rise	Check inlet vacuum and discharge pressure and compare with Published performance
	6	Obstruction in piping	See item 3
	7	Excessive slip	Check inside of casing for worn or eroded surfaces causing excessive clearances
Excessive power	8	Speed too high	Check speed and compare with published performance
	9	Excessive pressure rise	See Item 5
	10	Impeller rubbing	Inspect outside of cylinder for high temperature areas, then check for impeller contact at these points. Correct blower mounting, drive alignment
	11	Scale, sludge, rust or product build up	Clean blower appropriately
Overheating of	12	Inadequate lubrication	Check oil sump levels in gear and drive end headplates
bearing or gears	13	Excessive lubrication	Check oil levels. If correct, drain and refill with clean oil of recommended grade
	14	Excessive pressure rise	See Item 5
	15	Coupling misalignment	Check carefully. Realign if questionable
	16	Excessive belt tension	Readjust for correct tension
Vibration	17	Misalignment	See Item 15
	18	Impellers rubbing	See Item 10
	19	Worn bearings/gears	Check gear backlash and condition of bearings, and replace as indicated
	20	Unbalanced or rubbing impeller	Scale or process material may build up on casing and impellers, or inside impellers. Remove build-up to restore original clearances and impeller balance
	21	Driver or blower loose	Tighten mounting bolts securely
	22	Piping resonances	Determine whether standing wave pressure pulsations are present in the piping
	23	Scale/sludge build-ups	Clean out interior of impeller lobes to restore dynamic balance
	24	Casing strain	re-work piping alignment to remove excess strain
Driver stops, or will not start	25	Impeller stuck	Check for excessive hot spot on headplate or cylinder. See item 10. Look for defective shaft bearing and/or gear teeth
	26	Scale, sludge, rust or product build-up	Clean blower appropriately
Excessive breather	27	Broken seal	Replace seals
Blow-by or excessive oil leakage to vent area	28	Defective O-ring	Replace seals and O-ring

©2002 Dresser, Inc. all rights reserved.
ROOTS, RAM, URAI and WHISPAIR are trademarks of Dresser, Inc.
Dresser Design and Universal RAI are registered trademarks of Dresser, Inc.

MAINTENANCE & REPLACEMENTS: UNIVERSAL RAI® SERIES BLOWERS

A good program of consistent inspection and maintenance is the most reliable method of minimizing repairs to a blower. A simple record of services and dates will help keep this work on a regular schedule. Basic service needs are:

- Lubrication
- Checking for hot spots
- Checking for increases or changes in vibration and noise
- Recording of operating pressures and temperatures

Above all, a blower must be operated within its specified rating limits, to obtain satisfactory service life.

A newly installed blower should be checked often during the first month of full-time operation. Attention thereafter may be less frequent assuming satisfactory performance. Lubrication is normally the most important consideration and weekly checks of lubricant levels in the gearbox and bearing reservoirs should be customary. Complete oil change schedules are discussed under **LUBRICATION**.

Driver lubrication practices should be in accordance with the manufacturer's instructions. If direct connected to the blower through a lubricated type coupling, the coupling should be checked and greased each time blower oil is changed. This will help reduce wear and prevent unnecessary vibration. In a belted drive system, check belt tension periodically and inspect for frayed or cracked belts.

In a new, and properly installed, unit there is no contact between the two impellers, or between the impellers and cylinder or headplates. Wear is confined to the bearings (which support and locate the shafts) the oil seals, and the timing gears. All are lubricated and wear should be minimal if clean oil of the correct grade is always used. Seals are subject to deterioration as well as wear, and may require replacement at varying periods.

Shaft bearings are designed for optimum life under average conditions with proper lubrication and are critical to the service life of the blower. Gradual bearing wear may allow a shaft position to change slightly, until rubbing develops between impeller and casing. This will cause spot heating, which can be detected by observing these surfaces. Sudden bearing failure is usually more serious. Since the shaft and impeller are no longer supported and properly located, extensive general damage to the blower casing and gears is likely to occur.

Oil seals should be considered expendable items, to be replaced whenever drainage from the headplate vent cavity becomes excessive or when the blower is disassembled for any reason. Sealing effectiveness can vary considerably from seal to seal and is also affected to surprising degree by shaft finish under the seal lip. Because of these normal variables, minor seal leakage should not be considered as indicating seal replacement.

Timing gear wear, when correct lubrication is maintained, should be negligible over a period of years. Gear teeth are cut to provide the correct amount of backlash, and gears correctly mounted on the shafts will accommodate a normal amount of tooth wear without permitting contact between lobes of the two impellers. However, too high an oil level will cause churning and excessive heating. This is indicated by unusually high temperature at the bottom of the gear housing. Consequent heating of the gears will result in loss of tooth-clearance , backlash and rapid wear of the gear teeth usually will develop. Continuation of this tooth wear will eventually produce impeller contacts (knocking), and from this point serious damage will be unavoidable if blower operation is continued. A similar situation can be produced suddenly by gear tooth fracture, which is usually brought on by sustained overloading or momentary shock loads.

Problems may also develop from causes other than internal parts failure. Operating clearances within a blower are only a few thousandths of an inch. This makes it possible for impeller interference or casing rubs to result from shifts in the blower mounting, or from changes in piping support. If this type of trouble is experienced, and the blower is found to be clean, try removing mounting strains. Loosen blower mounting bolts and reset the leveling and drive alignment. Then tighten mounting again, and make sure that all piping meets blower connections accurately and squarely Foreign materials in the blower will also cause trouble, which can only be cured by disconnecting the piping and thoroughly cleaning the blower interior.

A wide range of causes & solutions for operating troubles are covered in the **TROUBLE SHOOTING CHECKLIST**. The remedies suggested should be performed by qualified mechanics with a good background, using procedures detailed in this manual. Major repairs generally are to be considered beyond the scope of maintenance, and should be referred to ROOTS.

Warranty failures should not be repaired at all, unless specific approval has been obtained through ROOTS before starting work. Unauthorized disassembly within the warranty period will void the warranty.

It is recommended that major repairs be performed at an authorized ROOTS facility. However, it is recognized that this may not always be practical. If a blower is out of warranty, mechanical adjustments and parts replacement may be undertaken locally at the owner's option and risk. It is recommended that ROOTS™ parts be used to insure fit and suitability. The maintenance of a small stock of on-hand spare parts can eliminate possible delays. When ordering parts give item numbers and their word descriptions from the appropriate sectional drawings. Also specify quantities required and the blower model and serial number from the nameplate.

Repairs or adjustments are best performed by personnel with good mechanical experience and the ability to follow the instructions in this manual. Some operations involve extra care, patience, and a degree of precision work. This is especially true in timing impellers and in handling bearings. Experience indicates that high percentages of bearing failures are caused by dirt contamination before or during assembly. Therefore, the work area should be cleaned before starting disassembly, and new or re-usable parts protected during progress of the work.

In the following repair procedures, numbers shown in brackets ( ) correspond to the item numbers used in sectional drawings. It is recommended that the procedures be studied carefully and completely, with frequent reference to the drawings, before starting work. This will produce better efficiency through an understanding of what work is to be done, and the order of doing it. Before disassembly, mark all parts so that they may be returned to original locations or relative positions.

Requirements for special tools will depend on the work to be done. If impeller clearances and float are to be checked or re-set, a dial indicator and a set of long feeler gauges will be needed. Work involving removal of the timing gears cannot be accomplished without a suitable puller.

Design of ROOTS™ blower is simple, and most repair operations are straightforward. For this reason, the following procedures are intended mainly to indicate a preferred work order and to call out points to be observed. Where special operations are required, detailed coverage is given.

A – Replacing Timing Gears

1. Drain all oil from the gearhouse by removing drain plug (21) in the bottom. Remove gearhouse by taking out all cap screws (23) in its flange. It may be necessary to bump the sides with a wood block or mallet to break the flange joint.
2. Reach through one of the blower pipe connections and place a chalk mark on the strip of one impeller and the mating waist of the other, so that they may easily be returned to their original relative positions.
3. **GEAR REMOVAL:** CAUTION: Do not remove gear nuts (17) completely before the gears are unseated from the taper fits or damage/injury may result. For this operation, the impellers should be wedged, as shown in Table 5. Back off gear clamping nuts (17) about 1/4". Use a suitable puller or wedge. As the puller set screw is torqued, the puller will have a tendency to turn and contact teeth of the other gear. To prevent this contact, hold the puller corner nut with a wrench while torquing the set screw. Once the gear is unseated, remove the puller. Remove gear nuts (17) and the gear.
4. **GEAR INSTALLATION:** Place impellers in correct position as previously marked. Be sure shafts and gear bores are clean, oil free and free of scratches. Clean the shaft tapered fits. Place hardwood wedges as shown in Table 5. Install drive gear (4) and gear nut (17). Tighten the drive gear nut to the torque given below. Blower assembly must be fastened down for torquing operation.
5. Installing driven gear (4) – Insert a long, metal feeler gauge between the impellers' lobes at the fronts or backs as shown below. Feeler gauge thickness to be a middle value from Table 5 for fronts and backs. Install nut (17). Tighten lightly with a small wrench, then check front and back clearances against Table 5 for each 45° position. Both fronts and backs should be about the same and within the specified range in Table 5. Adjust gear position, if necessary, then insert the corrected feeler gauge and wedges and use a torque wrench to tighten the gear nut to the torque specified in below. Remove wedges and rotate the drive shaft by hand to make sure there are no gear tight spots or impeller contacts. **CAUTION**! *Keep fingers away from impellers and gears.*

UNIVERAL RAI® SERIES BLOWER GEAR NUT TORQUE

Frame Size	Torque	
	lb.-ft.	(kg-m)
22, 24,	60	(8.3)
32, 33, 36	110	(15.2)
42, 45, 47	190	(26.3)
53, 56, 59	250	(34.6)
65, 68, 615	400	(55.3)
76, 711, 718	550	(76.1)

©2002 Dresser, Inc. all rights reserved.
ROOTS, RAM, URAI and WHISPAIR are trademarks of Dresser, Inc.
Dresser Design and Universal RAI are registered trademarks of Dresser, Inc.

6. Check the end clearances between impellers and headplates. Adjust clearances per B-15 below.

7. When clearances are correct, clean and re-install the gearhouse. Check condition of flange gasket (7) and replace if questionable. Fill gearhouse to correct level with proper grade oil.

B – Replacing Shaft Bearings and Impellers

Remove coupling or sheave from the drive shaft. Drain and remove gearhouse, and pull the timing gears. If gears are to be re-used, mark them so they may be returned to the same shafts.

1. Break corners and deburr the keyway. Remove bearing end cover at the drive end. Remove bearing clamp plates (34).

2. Make single and double identifying punch marks on the mating edges of headplate and cylinder flanges at the two ends of the blower.

3. At the drive end, drive out the two dowel pins and remove all capscrews holding headplate to cylinder. By inserting jacking screws into the two threaded flange holed, and turning them in evenly, the headplate will be separated from the cylinder. As the headplate comes off the shafts it will bring bearings with it. 2-1/2" and 3-1/2" gear diameter units do not have tapped holes for jack screws in the drive end headplates. Remove dowel pins and all capscrews holding headplate to cylinder and foot on the drive end. Support unit under gear end cylinder flange with the shafts vertical. Using soft metal block against gear end shafts, push them out of gear end headplate.

4. For 2-1/2" and 3-1/2" gear diameter units, support the drive end headplate on the underside, and using soft metal block against drive end shafts, push them out of drive end headplate.

   For 4", 6" & 7" gear diameter units, from the gear end, using a wood or soft metal block against the ends of the shafts, drive them out of the head plate. If they are to be reused, protect them from damage in this operation.

5. If blower interior surfaces need cleaning, it may be advisable to separate the gear end headplate from the cylinder. Use the same general procedure as employed at the drive end.

6. Working from the back (flat) face of each head plate, push or tap out the bearings and seals. Use a round bar or tube that will pass through the shaft clearance holes in the headplates. All lip seals will be damaged during removal and must be replaced.

7. Clean bearing and seal pockets in headplates and remove burrs or rough edges. (Apply a thin coating of sealant on seal O.D.) Press new seals (27) into gear end headplate using a round tube or bar with recessed end that will bear on the outer metal edge of seal enclosure. Seal lip should point toward the driving tool. Seals to be flush without board bore face. Apply a light coat of oil or grease to the seal lips. In a similar fashion, install lip seals into the drive end headplate.

8. Place cylinder on a flat surface. Assemble gear end headplate to cylinder after checking flange punch marks. Drive in the two locating dowel pins before tightening flange screws. Also install gear end foot using the same longer cap screws (32) and washers (41). (On 6" & 7" UNIVERSAL RAI® blower install both gear end feet.)

9. Place the assembly horizontally on steel blocks with gear end headplate on bottom. The height of the blocks should be sufficient to clear gear end shaft extensions. Assemble impellers into the cylinder with the drive shaft (longer shaft) in same location as in original assembly. Before starting the shafts through the headplate holes, make sure shaft ends have no sharp or rough edges to damage seal lips. Position impellers at 90° to each other in the cylinder, using lobe-and-waist match marks if original impellers are being re-installed. Install drive end headplate and feet in same manner as gear end.

10. It is recommended that new bearings be used for rebuild. Apply thin film of machine oil on the shaft bearing fit, bearing I.D., and headplate bearing bore. Install drive end bearings into headplate. Use a tube with flanged end that will contact both bearing faces simultaneously. Refer to Assembly Drawing for proper bearing depths.
    NOTE: *Cylindrical drive bearing should be installed with inner race large shoulder facing outboard.*

11. Place blower on its feet on a flat surface. Loosen feet capscrews (32) and square up unit. Re-tighten capscrews (32). Clamp unit down to a solid base for further assembly.

12. Oil the gear end bearing fits as described previously. Install 2-1/2" thru 5" blower gear end bearings flush with the headplate bearing shoulders using proper drivers. On 6" & 7" gear diameter units, install thrust washer (29) in bearing bores then install gear end bearings so they protrude 1/16" (1.6mm) above headplate surface.

13. Install bearing clamp plates (34). On 6" & 7" gear diameter units, blower impeller end clearances are also to be set during this step. Install clamp plates (34) with capscrews (31) making sure that the gap between the clamp plates and the headplate is even all around. At the same time, set end clearances per Table 5.

14. Install gears and time impellers as in (A).

15. For setting end clearances on 2-1/2" thru 5" gear diameter units, special tools, thrust adjuster fork and thrust adjuster saddle are required. Refer to Table 5 for installation of tools. The flat side of the saddle rests against the bearing inner race and the flat side of the fork rests against the back side of the gear. Install a shim, with thickness equal to gear end clearance (Table 5), between the impeller and the gear end headplates. Tap on top of the fork until the shim becomes snug. Remove the shim and check end clearances. To increase gear end clearance, tap on the end of the gear end shaft with a soft metal mallet. Set end clearances for 6" & 7" by turning capscrews (31) evenly in or out.

16. Install drive end cover (5) after packing bearing cavities with suitable grease. Replace drive shaft seal. Lip must point toward (33) the bearing. Exercise care not to damage the lip as it passes over shaft keyway.

17. Install gasket item (7). Install the gear house after cleaning out the inside. Tighten gear box cap screws (23) evenly. Fill with correct grade of oil until oil flows out through oil level hole. Grease drive and bearings. (See Lubrication.)

18. Reinstall coupling or belt sheave making sure that they have a slight slide fit with the shaft and could be installed by hand.

TECHNICAL SUPPLEMENT

for 32, 33, 36, 42, 45, 47, 53, 56, 59, 65, 68, 615
UNIVERAL RAI®-G BLOWERS

ROOTS™ Universal RAI™-G rotary positive gas blowers are a design extension of the basic Universal RAI™ blower model. URAI™-G blower uses (4) mechanical seals in place of the standard in board lip seals to minimize gas leakage into the atmosphere. The seal vent chambers are plugged. These units are intended for gases which are compatible with cast iron case material, steel shafts, 300/400 series stainless steel and carbon seal components, viton o-rings and the oil/grease lubricants. If there are any questions regarding application or operation of this gas blower, please contact factory.

Precaution: ***URAI™-G blowers: Care must be used when opening the head plate seal vent chamber plugs (43) as some gas will escape–if it is a pressure system, or the atmospheric air will leak in-if the system is under vacuum. There is a possibility of some gas leakage through the mechanical seals. This leakage on the gear end will escape through the gear box vent, and on the drive end, through the grease release fittings. If the gas leakage is undesirable, each seal chamber must be purged with an inert gas through one purge gas hole (43) per seal . There are two plugged purge gas holes(1/8 NPT) provided per seal. The purge gas pressure must be maintained one psi above the discharge gas pressure. Also, there exists a possibility of gear end oil and drive end grease leakage into the gas stream.***

The lubricants selected must be compatible with the gas. Mechanical Seal Replacement: Disassemble the blower. During disassembly, damage to mechanical seals is very likely. During rebuild, always use new mechanical seals. Prior to any assembly, make sure that all parts are completely clean and free from nicks and scratches.

(1) Place head plate on an assembly table with seal bores pointing up. Coat the OD of the stationary seal element and install it with carbon facing up in the seal bore with a seal driver that is guided by the bearing bore. Drive the seal flush with front face of the seal bore. Repeat this procedure for all four seals. Apply a light coating of lubricating oil on the sealing surface. Protect sealing faces during assembly from any damage.

(2) Apply teflon based sealant on the cylinder flanges before installing head plates. Continue the assembly procedure as outlined up to bearing installation. Before installation of the bearings, the seal mating rings need to be installed. Apply light film of lubricating oil on mating ring o-rings and sealing faces. Slide mating rings on the shaft and up to carbon faces making sure that no damage to the o-rings occur during installation (break sharp shaft corners to avoid damage to the o-rings during initial preparation). Install bearings all the way against the back bearing bore shoulders.

(3) Complete the rest of the assembly.Make sure all plugged holes are sealed with teflon thread liquid sealant.

Note: On 6" gear diameter units, shims (44) are used between the bearing clamp plates and the head plate on the gear end.

Also, on size 32 and 42, washers with embedded o-rings are used on the center head plate to cylinder bolts.

After the assembly is completed, plug the blower inlet and discharge connections and run static soap bubble. Leak test to assure leak free assembly.

For satisfactory operation of mechanical seals, synthetic lubricants are recommended (Check suitability to gases before using.)

Oils:
(1) ROOTS™ GT Synthetic Lubricant ROOTS P/N 13-106-001 (1) one quart ISO-220

(2) Mobil SHC 600 Series Lubricating Oils

Grease:
ROOTS™ Synthetic Grease – NLGI # 2
ROOTS P/N T20-019-001 (1) one 14 oz tube

©2002 Dresser, Inc. all rights reserved.
ROOTS, RAM, URAI and WHISPAIR are trademarks of Dresser, Inc.
Dresser Design and Universal RAI are registered trademarks of Dresser, Inc.

MAINTENANCE & REPLACEMENTS: RAM™ SERIES BLOWERS

A good program of consistent inspection and maintenance is the most reliable method of minimizing repairs to a blower. A simple record of services and dates will help keep this work on a regular schedule. Basic service needs are:

- Lubrication
- Checking for hot spots
- Checking for increases or changes in vibration and noise
- Recording of operating pressures and temperatures

Above all, a blower must be operated within its specified rating limits, to obtain satisfactory service life.

A newly installed blower should be checked often during the first month of full-time operation. Attention thereafter may be less frequent assuming satisfactory performance. Lubrication is normally the most important consideration and weekly checks of lubricant levels in the gearbox and bearing reservoirs should be customary. Complete oil change schedules are discussed under **LUBRICATION**.

Driver lubrication practices should be in accordance with the manufacturer's instructions. If direct connected to the blower through a lubricated type coupling, the coupling should be checked and greased each time blower oil is changed. This will help reduce wear and prevent unnecessary vibration. In a belted drive system, check belt tension periodically and inspect for frayed or cracked belts.

In a new, and properly installed, unit there is no contact between the two impellers, or between the impellers and cylinder or headplates. Wear is confined to the bearings (which support and locate the shafts) the oil seals, and the timing gears. All are lubricated and wear should be minimal if clean oil of the correct grade is always used. Seals are subject to deterioration and wear, and may require replacement at varying periods.

Piston ring seals (28) are designed to operate without rubbing contact, once temperature and thermal growth have stabilized. The stationary rings will rub the rotating sleeve (38) briefly as a result of temperature cycles that occur during the startup and shutdown of the unit. The sleeves are hardened and the rings are coated with dry lubricant that provides for temporary break in wear. Replace piston ring seals if they become excessively worn or inspection shows more than .010" (.25mm) axial clearance between ring and groove.

Shaft bearings are designed for optimum life under average conditions with proper lubrication and are critical to the service life of the blower. Gradual bearing wear may allow a shaft position to change slightly, until rubbing develops between impeller and casing. This will cause spot heating, which can be detected by observing these surfaces. Sudden bearing failure is usually more serious. Since the shaft and impeller are no longer supported and properly located, extensive general damage to the blower casing and gears is likely to occur.

Oil seals should be considered expendable items, to be replaced whenever drainage from the headplate vent cavity becomes excessive or when the blower is disassembled for any reason. Sealing effectiveness can vary considerably from seal to seal and is also affected to surprising degree by shaft finish under the seal lip. Because of these normal variables, minor seal leakage should not be considered as indicating seal replacement.

Timing gear wear, when correct lubrication is maintained, should be negligible over a period of years. Gear teeth are cut to provide the correct amount of backlash, and gears correctly mounted on the shafts will accommodate a normal amount of tooth wear without permitting contact between lobes of the two impellers. However, too high an oil level will cause churning and excessive heating. This is indicated by unusually high temperature at the bottom of the gear housing. Consequent heating of the gears will result in loss of tooth-clearance , backlash and rapid wear of the gear teeth usually will develop. Continuation of this tooth wear will eventually produce impeller contacts (knocking), and from this point serious damage will be unavoidable if blower operation is continued. A similar situation can be produced suddenly by gear tooth fracture, which is usually brought on by sustained overloading or momentary shock loads.

Problems may also develop from causes other than internal parts failure. Operating clearances within a blower are only a few thousandths of an inch. This makes it possible for impeller interferences or casing rubs to result from shifts in the blower mounting, or from changes in piping support. If this type of trouble is experienced, and the blower is found to be clean, try removing mounting strains. Loosen blower mounting bolts and reset the leveling and drive alignment. Then tighten mounting again, and make sure that all piping meets blower connections accurately and squarely Foreign materials sucked into the blower will also cause trouble, which can only be cured by disconnecting the piping and thoroughly cleaning the blower interior.

A wide range of causes & solutions for operating troubles are covered in the **TROUBLE SHOOTING CHECKLIST**. The remedies suggested should be performed by qualified mechanics with a good background, using procedures detailed in this manual. Major repairs generally are to be considered beyond the scope of maintenance, and should be referred to ROOTS.

Warranty failures should not be repaired at all, unless specific approval has been obtained through a Sales Office or the factory before starting work. Unauthorized disassembly within the warranty period will void the warranty.

It is recommended that major repairs be performed at an authorized ROOTS facility. However, it is recognized that this may not always be practical. If a blower is out of warranty, mechanical adjustments and parts replacement may be undertaken locally at the owner's option and risk. It is recommended that ROOTS™ parts be used to insure fit and suitability. The maintenance of a small stock of on-hand spare parts can eliminate possible delays. When ordering parts give Item numbers and their word descriptions from sectional drawings and parts lists. Also specify quantities wanted and the blower size and serial number from the nameplate.

Repairs or adjustments are best performed by personnel with good mechanical experience and the ability to follow the instructions in this manual. Some operations involve extra care, patience, and a degree of precision work. This is especially true in timing impellers and in handling bearings. Experience indicates that high percentages of bearing failures are caused by dirt contamination before or during assembly. Therefore, the work area should be cleaned before starting disassembly, and new or re-usable parts protected during progress of the work.

In the following repair procedures, numbers shown in brackets ( ) correspond to the Item numbers used in assembly drawings, and parts lists. It is recommended that the procedures be studied carefully and completely, with frequent reference to the drawings, before starting work. This will produce better efficiency through an understanding of what work is to be done, and the order of doing it. Before disassembly, mark all parts so that they may be returned to original locations or relative positions.

Requirements for special tools will depend on the work to be done. If impeller clearances and float are to be checked or re-set, a dial indicator and a set of long feeler gauges will be needed. Work involving removal of the timing gears cannot be accomplished without a puller suitable. Heat must be used during bearing and sleeve installation.

Design of ROOTS™ blower is simple, and most repair operations are straightforward. For this reason, the following procedures are intended mainly to indicate a preferred work order and to call out points to be observed. Where special operations are required, detailed coverage is given.

DISASSEMBLY OF DRIVE END

1. Remove the sheave or coupling and key from the drive shaft. File off any burrs or sharp edges along the keyway.
2. Drain oil by removing drain plug (22).
3. Remove the flange screws (75). Tap the drive end cover to loosen it, then slide it along the shaft care fully to avoid damaging the lip seal (33) on the drive shaft keyway. Remove the gasket (7). Remove oil slinger (40) and cap screw (60).
4. Remove bearing clamp plates (34) by unscrewing capscrews (32) and removing lock washers (35). Keep shim halves (10) together exactly as removed by tagging them with each clamping plate.
5. Remove the headplate – remove all capscrews (23) holding headplate to the cylinder. Insert jacking screws into the four threaded flange holes and turn them in evenly. The headplate will separate from the cylinder. The lip seals (27), and bearing outer race and rollers, are removed with the headplate and can be pressed out later.
6. Remove the bearing inner race and sleeve (38) from the shaft with aid of a bearing puller by inserting the puller jaws in the groove in the sleeve and applying the jacking screw against the end of the shaft. Protect the threaded hole and the end of the shaft with a small, flat spacer between the shaft and the puller.

DISASSEMBLY OF GEAR END

1. Drain oil completely from the gearbox sump by removing plugs (22) in bottom of the headplate (1).
2. Loosen all flange screws (75) in the gearbox and remove all but two upper screws. Bump the gear box to break the joint if it cannot be pulled free by hand, then remove the last two screws and lift off the gearbox. Remove gasket (7).
3. Removing gears: CAUTION**:** Do not remove gear nuts (31) completely before the gears are unseated from the taper fits or damage/injury may result. Be sure that each gear is marked for return to the same shaft in the same angular position and that the gears have match marks for the teeth. For this operation, the impellers should be wedged as shown in Figure 8. Back off nuts (31) and slinger (46). The timing gears (4) have two 1/2" – 13 holes for pulling purposes. Use a suitable puller.
4. Remove bearing clamp plates (54) by unscrewing capscrews (32) and removing lock washers. Group the shims (10), the wavy spring washers (29) with each clamp plate and tag for ease of reassembly.
5. Remove the headplate – remove all capscrews 23) holding the headplate to the cylinder. Insert jacking screws into the four (4) threaded flange holes and turn them in evenly. They headplate will separate from the cylinder. The lip seals (27), and bearing outer race and rollers, are removed with the headplate and can be pressed out later.

   For RAM™-J WHISPAIR™ gas pump units:
   The gear end headplate which is removed next requires a different approach from the drive end. On this end, the shafts are forced from the bearing bore by using a bar across the end of the shaft with threaded rods to the headplate. Once the headplates are removed from the assembly, the seal housings can be pressed or driven from

©2002 Dresser, Inc. all rights reserved.
ROOTS, RAM, URAI and WHISPAIR are trademarks of Dresser, Inc.
Dresser Design and Universal RAI are registered trademarks of Dresser, Inc.

the headplate bores. Generally, new seals will be required prior to reassembly.

6. Remove the bearing inner race and sleeve (38) from the shaft with the aid of a bearing puller by inserting the puller jaws in the groove in the sleeve and applying the jacking screw against the end of the shaft. Protect the threaded hole and the end of the shaft with a small, flat spacer between the shaft and the puller.

ASSEMBLY

Prior to any assembly operation, it is essential that all parts are completely clean and free from nicks and scratches.

Prior to assembly, lightly coat the groove in the sleave with slip plate. ROOTS P/N813-314-000.

1. Assembly of Piston ring seals (28) – To avoid scratching the lip seal surface, install the Piston ring seals (28) in the sleeves (38) from the end nearest the groove before assembling the sleeve on the shaft.

   Unhook the gap joint and expand the ring while sliding it to the groove, then compress it so one end of the hook joint slides over the other. Move the ring in the groove to be sure it is free.

   NOTE: *Care must be taken not to scratch or dent the sleeve surface since it is the sealing surface for the lip seal.*

2. Installation of sleeves (38) – heat the sleeve to 300° F. (149°C) then quickly slide it on the shaft tightly against the impeller. If the sleeve hangs up during assembly, it can be pressed into place using a tubular pressing tool with square, clean ends.

3. Assembly of seals (27) in headplate (1) – Place headplate flat with seal bores up. Be sure the pressing tool face is clean and square and there is a smooth, clean entering bevel in the headplate. Lubricate the seal lips. Place seal over the bore with lip facing up, then press the seal evenly until it is flush with bore face.

   For Gas Sealed Units: Assemble mechanical seals (27) in headplate – (**CAUTION:** *Care must be used to avoid damaging the carbon face. Before proceeding with this step, you should have a piloted seal driver which is designed to clear the carbon face.*) with headplate positioned horizontally with seal bores up. Be sure the pressing tool face is clean and square and there is a smooth, clean entering bevel in the headplate. Place the seal over the bore with carbon facing up. Then press the seal evenly on its steel shell using the piloted seal driver until the driver seats against the stop.

4. Assembly of impellers (12 and 13) to headplate (1) – Place gear end headplate flat on 3 in. (76 mm) blocks with the smallest bores facing up. Inspect entering bevels to be sure they are smooth and clean. Locate the drive impeller correctly (top for vertical units and toward the driver for horizontal units). Place the seal ring gaps toward the inlet for pressure applications and towards dis charge for vacuum applications. Insert the impeller shafts in the headplate so the impellers rest on the headplate. Use care to avoid damaging the lip seals.

5. Assembly of cylinder (11) to gear end headplate (1) – Install dowel pins (16) and secure cylinder to headplate with capscrews (23). Torque to 35 ft.-lbs (4.5 Kg-m). Then, install drive end headplate (1) and dowel pins (16) and secure with capscrews (23). Install feet (76) & 77) to both headplates and secure with capscrews (66). Torque to 35 ft.-lbs. (4.5 kg-m).

   For Gas Sealed Units: Use a Teflon sealant between headplate and cylinder joint. Assemble rotating seal – apply a light coating of oil to the O-ring and seal face. Then with flute side out install the rotating seat tight to the shaft sleeve. Check and record seal compression – With the seal body in place and the impeller against the opposite headplate, check that seal compression is adequate. This can be checked using a depth gauge or dial indicator from the face of the head plate to the face of the mating ring. First, measure this distance while the carbon is out at its full length. Then, push the mating ring back against its stop and measure it again. The difference between these measurements is the compression. This can be done easily with finger pressure as the spring force is only 10 lbs. The correct travel is given below (record actual compression on clearance sheets).

SEAL COMPRESSION

Frame	Minimum	Maximum
400	.047”	.097”
600	.108”	.151”

* Prior to to assembly, lightly coat the groove in the sleave(38) with slip plate. ROOTS™ P/N 813-314-000

6. Installation of bearings (14) – Heat bearing inner race to 300°F (149°C) in an oven or hot oil; then slide it onto the shaft so the bearing shoulder is snugly against the sleeve. Note: Be sure to install the shaft shim (70) behind the shaft sleeve before installing the drive end drive bearing inner race. This is required to compensate for the oil leader for shimming. Insert the bearing outer race and rollers in each bore and tap lightly in place. Spray bearings with lubricant.

7. Measure and record the end clearances between the impellers and drive headplate using long feeler gauges. Then, subtract the allowed average drive end clearance. See Table 6. The result is the space required between clamping plates (34) and bearing outer race. Place shims (10) as required to get this clearance. Then, fasten the clamping

plates to the headplate with capscrews (32) and lock washers (35).

8. Installation of gear end bearings (14) – Turn the blower so that the gear end headplates is up. Heat bearing inner race to 300°F (149°C) in an oven or hot oil; then slide it onto the shaft so that the bearing shoulder is snugly against the sleeve. Insert the bearing outer race and rollers in each bore and tap lightly into place.

9. Measure and record the end clearance between the impellers and gear end headplate, then subtract the allowed average gear end clearance. See Table 6. The result is the space required between clamping plate (54) and bearing outer race. Place shims (10) as required to get this clearance. Then fasten the clamping plates (54) to the headplate using capscrews (32) and lock washers (35). Do not install wavy-spring washers (29) at this time, as a final check of clearances is required first.

10. Final check of end clearances and float – Using long feeler gauges, check the clearance between the impellers and drive end headplate. See Table 6. Place the blower assembly on its feet and correct shimming as required. Then, force the impellers as close to the gear end headplate as possible, and check the clearance between impellers and gear end headplate for agreement with Table 6. Adjust shimming on the gear end as required. With unit securely fastened down, use a dial indicator to measure the impeller float. Again push the impeller to one end of the cylinder. With indicator firmly mounted, place contact point on the end of the shaft just pushed and set dial on zero. Force the impeller to the opposite end (toward indicator). Indicator reading will be a measurement of the impeller float. Repeat process on second impeller and compare float to Table 6. Adjust shimming at bearing clamp plates to obtain both float and end clearances specified in Table 6.

    Finally, after clearances and float have been corrected and checked, remove the gear end clamping places (54) and install wavy-spring washers (29) and reinstall shims (10) and clamping plates (54). Be sure oil feed grooves are up and toward bearings.

11. Installing drive gear (4) – Be sure shafts and gear bores are clean and free of scratches. Oil gear nut threads lightly. Place hardwood wedges as shown in Figure 8. Install gear (4) and nut (31) so match mark at the tooth is at the line of engagement. Tighten the drive gear to the torque given below. Blower assembly must be fastened down for torquing operation.

12. **Left side discharge machine**
    Installing driven gear (14) – Insert a long metal feeler gauge between the impellers' lobes at the fronts as shown in Table 6. Feeler gauge thickness to be a middle value from Table 6 for fronts.

13. **Right side discharge machine**
    Installing driven gear (4) – Insert a long metal feeler gauge between the impellers' lobes at the backs. Feeler gauge thickness to be minimum value from Table 6 for backs.

RAM™ SERIES BLOWER GEAR NUT TORQUE

Frame Size	Torque	
	lb.-ft.	(kg-m)
404, 406, 409, 412, 418	400	(56)
616, 624	630	(88)

RAM™ SERIES BLOWER OIL SLINGER SCREW TORQUE

Frame Size	Torque	
	lb.-ft.	(kg-m)
404, 406, 409, 412, 418	75	(10)
616, 624	140	(19)

Align the gear so the tooth match marks agree with the drive gear, then install slinger (46) and nuts (31). Tighten lightly with a small wrench, then check front and back clearances against Table 6 for each 45° position. Both fronts should be about the same and backs should about equal and be within the specified range in Table 6. Adjust gear position if necessary, then insert the corrected feeler gauge and wedges and use a torque wrench to tighten the gear nut to the torque specified above. Remove wedges and rotate the drive shaft by hand to make sure there are no gear tight spots or impeller contacts. **CAUTION: Keep fingers away from impeller end gears.**

Install gearbox (3) with gasket (7) and tighten the capscrews (75) evenly to 10 ft.-lbs. (1.3 kg-m).

Install drive end oil slinger (40) and capscrew (60), apply Locktite to threads and torque to value specified above.

Install drive end cover (5) and gasket (7) with drive lock pins (17) in place, being careful not to dent or scratch drive shaft lip seal surface. Tighten capscrews (75) evenly. Check seal bore for concentricity with shaft using an indicator; reposition drive lock pins, if necessary. Install seal (33) with lip facing inward, using care to avoid tearing or scratching seal on shaft keyway. Use a pressing tool with clean, square ends to insure correct positioning of the seal. For hydrodynamic style seals, the shaft rotation is critical for correct installation and proper sealing. Match the directional arrow shown on the seal faces with the required shaft rotation. An installation protective sleeve is required to protect seal lip during installation.

Install vent plug (21) in each headplate.

Replace oil drain plugs (22) and refill drive end and gear sumps with proper grade of oil as discussed under **LUBRICATION**.

Install drive sheave or coupling half and install blower, refer to **INSTALLATION instructions**.

©2002 Dresser, Inc. all rights reserved.
ROOTS, RAM, URAI and WHISPAIR are trademarks of Dresser, Inc.
Dresser Design and Universal RAI are registered trademarks of Dresser, Inc.

FIGURE 2

ALLOWABLE OVERHUNG LOADS FOR V-BELT DRIVES UNIVERSAL RAI®/URAI™-J UNITS

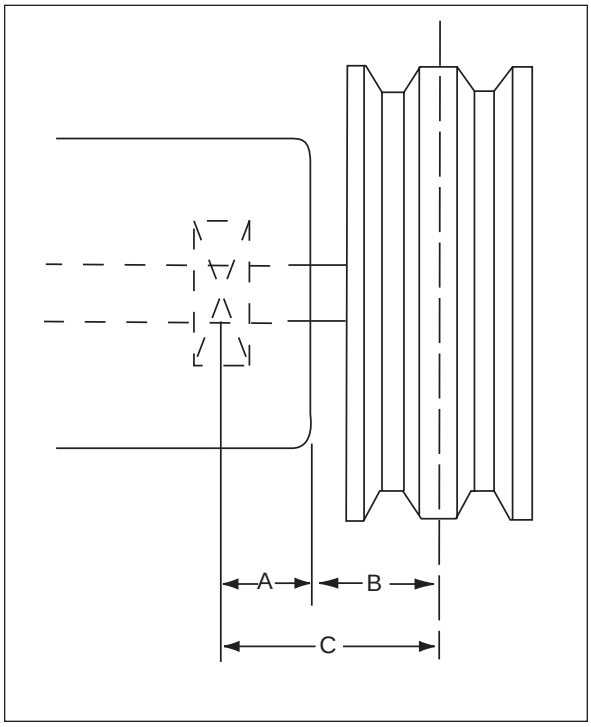

$$\text{Belt Pull lbs} = \frac{252100 \bullet \text{Motor HP}}{\text{Blower RPM} \bullet \text{Sheave Diameter}}$$

C = Distance between drive bearing center line and sheave center line (A+B)

$$B = \left(1/8\text{”} + \frac{\text{Sheave Width}}{2}\right)$$

Shaft Load (lb.in) = Belt Pull • C

Frame Size	Dimension “A”	Max Allowable Shaft Load (lb-in.)
22, 24	0.61	80
32, 33, 36	0.80	300
42, 45, 47	1.02	640
53, 56, 59	1.13	1,110
65, 68, 615	1.36	1,550
76, 711, 718	1.16	2,300

NOTE: Arc of sheave belt contact on the smaller sheave not to be less than 170°

Driver to be installed on the inlet side for vertical units, and on the drive shaft side for horizontal units.

ALLOWABLE OVERHUNG LOADS FOR V-BELT DRIVES 400 - 600 RAM™ UNITS

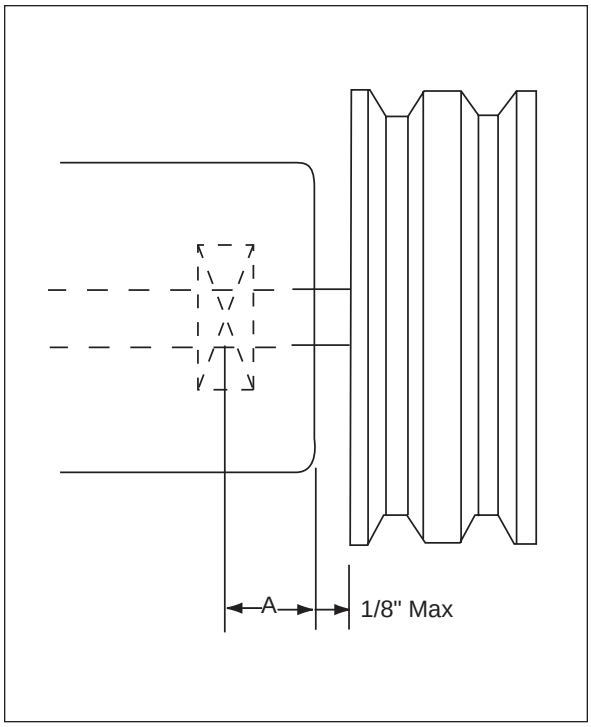

$$\text{Belt Pull lbs} = \frac{27500 \bullet \text{Motor HP}}{\text{Blower RPM} \bullet \text{Sheave Diameter}}$$

$$\text{Shaft Load (lb.in)} = \text{Belt Pull} \bullet \left(A + 1/8\text{”} + \frac{\text{Sheve Width}}{2}\right)$$

	Dimension “A”		
Frame Size	Standard Unit	Bottom Drive or Double Shaft Seal	Max Allowable Shaft Load (lb-in.)
404, 406	1.90	2.11	3,200
409, 412, 418	1.90	2.11	3,200
616, 624	2.11	2.67	7,975

NOTE: Arc of sheave belt contact on the smaller sheave not to be less than 170°

Driver to be installed on the inlet side for vertical units, and on the drive shaft side for horizontal units.

FIGURE 3

AIR BLOWER INSTALLATION WITH ACCESSORIES

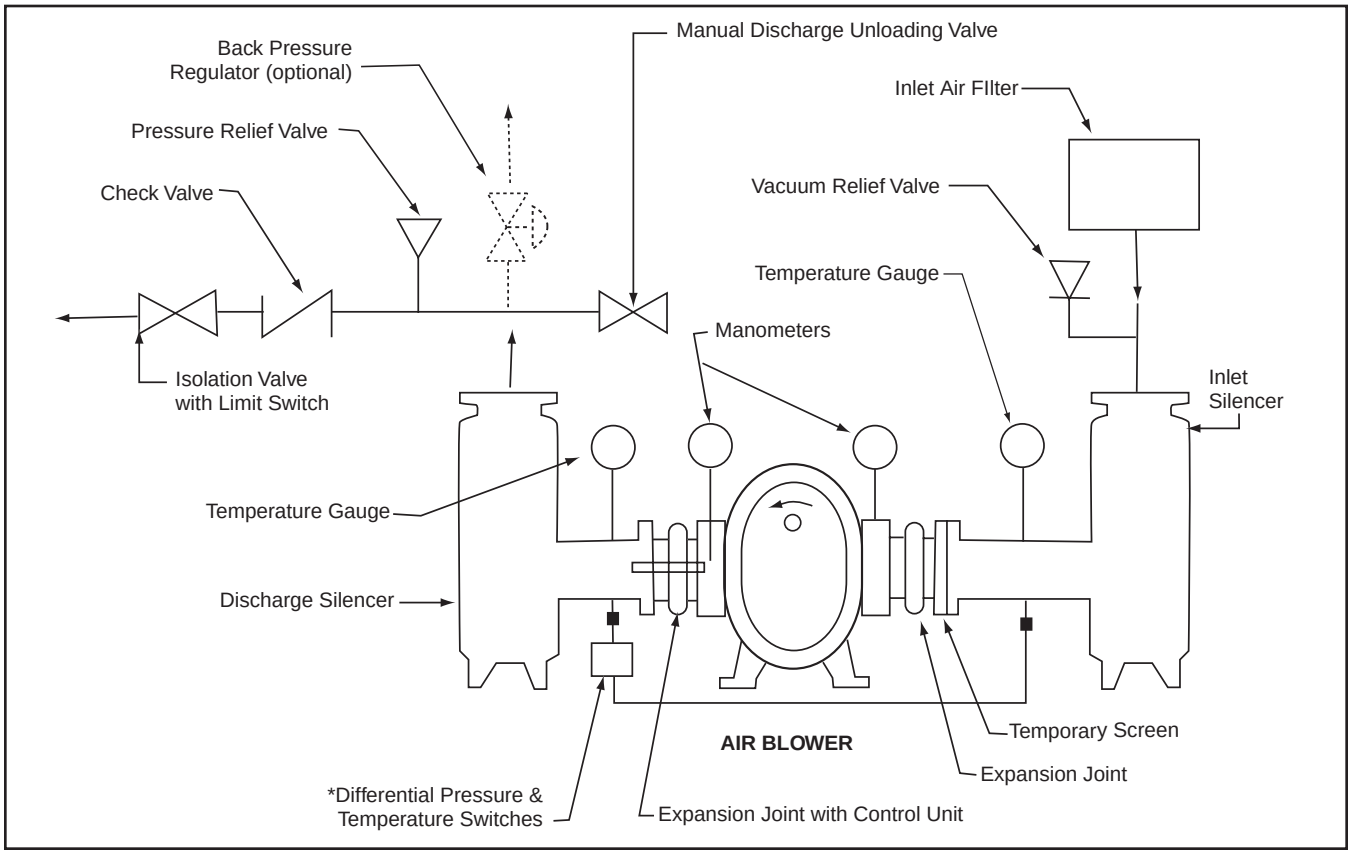

Above are suggested locations for available accessories.

GAS BLOWER INSTALLATION WITH ACCESSORIES

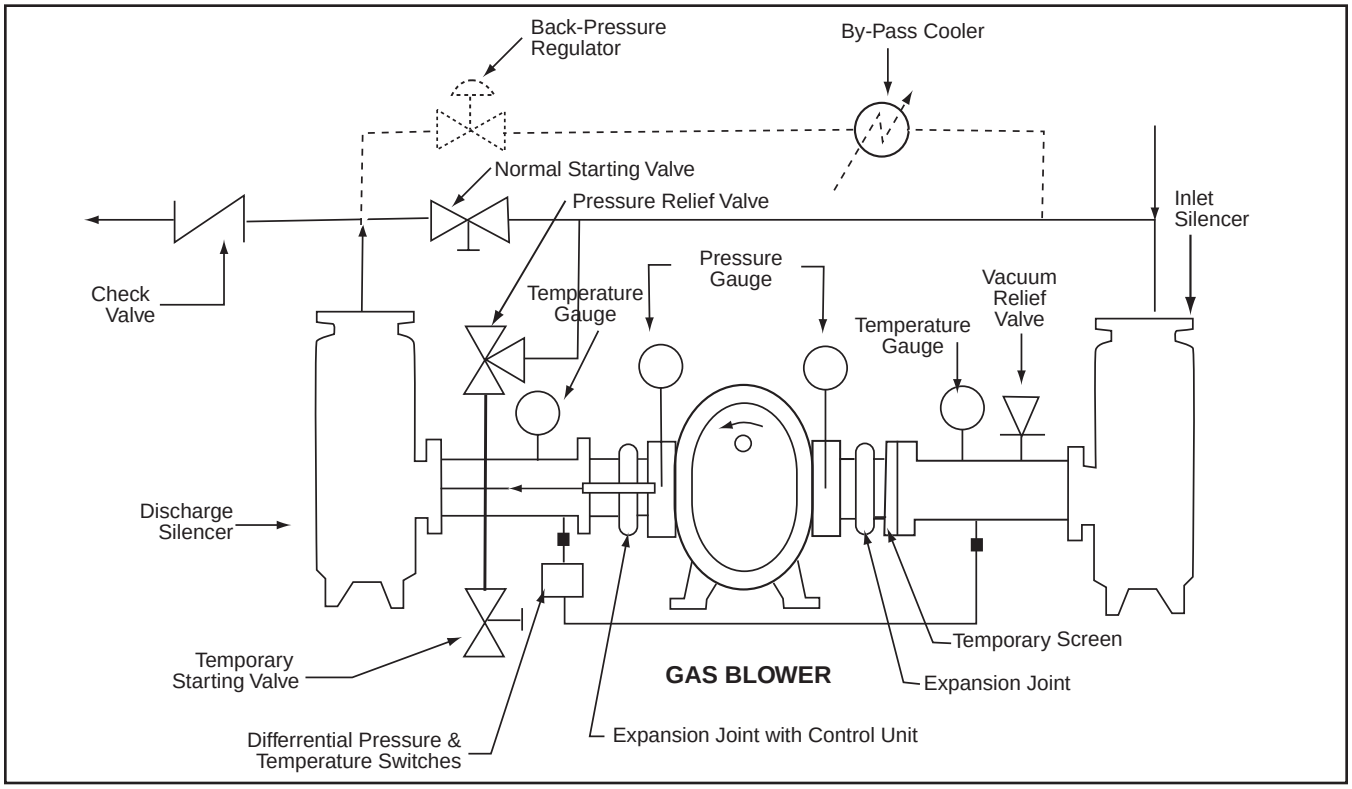

Above are suggested locations for available accessories.

©2002 Dresser, Inc. all rights reserved.
ROOTS, RAM, URAI and WHISPAIR are trademarks of Dresser, Inc.
Dresser Design and Universal RAI are registered trademarks of Dresser, Inc.

FIGURE 4

BLOWER ORIENTATION CONVERSION

Model	Reversible Rotation	Whispair Design
Universal RAI	yes	no
URAI-J	no	yes
URAI-G	yes	no
RAM	yes	no
RAM-J	no	yes
RAM-GJ	no	yes

Special Note: WHISPAIR™ models are designed to operate with only one shaft rotation direction to take full advantage of the Whispair feature. Therefore, a WHISPAIR™ blower should be operated in the following combinations only.

- **CCW Rotation:** Bottom Shaft; Right side discharge or a Left Shaft; Bottom discharge
- **CCW Rotation:** Top Shaft; Left side discharge or a Right Shaft; Top discharge
- **CW Rotation:** Bottom Shaft; Left side discharge or a Right Shaft Bottom discharge
- **CW Rotation:** Top Shaft; Right side discharge or a Left Shaft Top discharge

BLOWER ORIENTATION AND LUBRICATION POINTS: UNIVERSAL RAI® & URAI™-G GAS BLOWERS

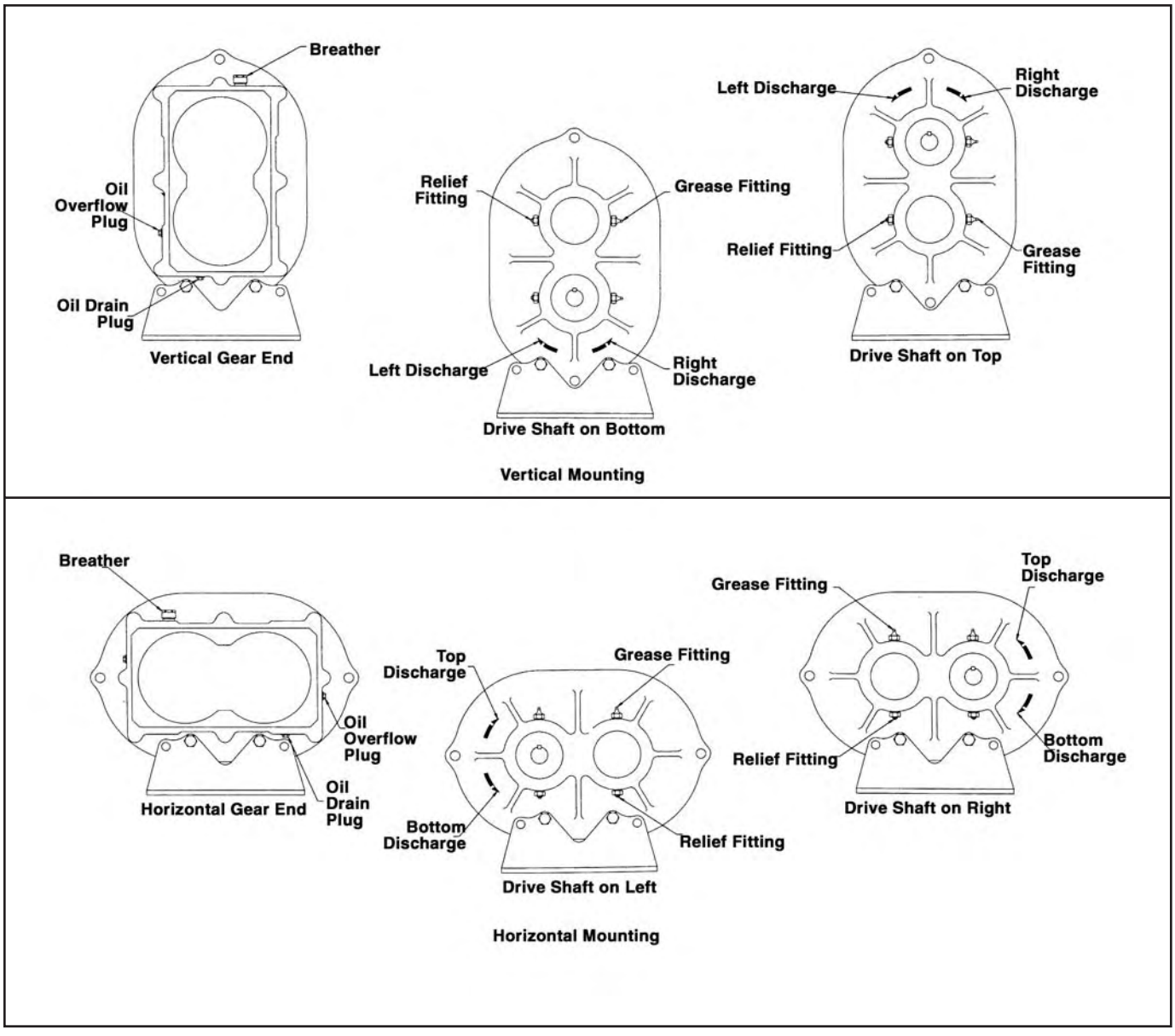

FIGURE 5

BLOWER ORIENTATION CONVERSION - WHISPAIR™ UNITS

1. STANDARD ARRANGEMENT (3-WAY UNIVERSAL)
   EXTERNAL SIGHT GLASSES (37) & BREATHERS (21) MUST BE RELOCATED AS SHOWN.
   FEET (76&77) & LIFTING LUGS (63) MUST BE RELOCATED AS SHOWN.

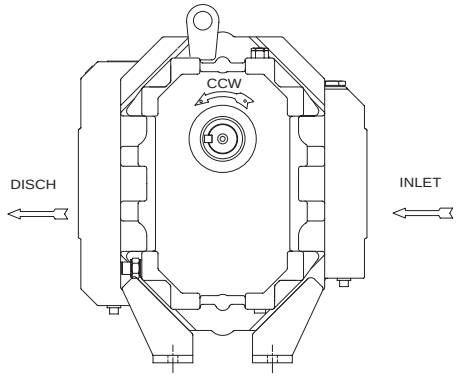

TOP DRV, L.S. DISCH

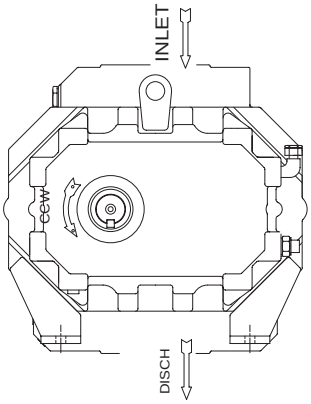

L.H. DRV, BTM DISCH

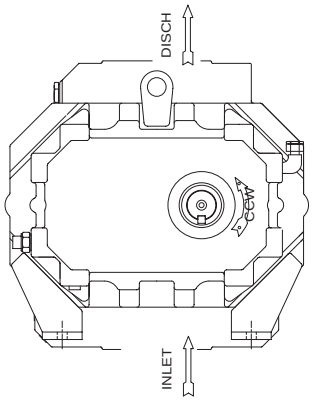

R.H. DRV, TOP DISCH

2. NON-STANDARD ARRANGEMENT (3-WAY UNIVERSAL)
   CYLINDER (11) MUST BE UNBOLTED FROM HEADPLATES (1) AND DISCHARGE RELOCATED AS SHOWN. **MUST HAVE AUTHORIZATION FOR CONVERSION SO NOT TO VOID WARRANTY.**
   EXTERNAL SIGHT GLASSES (37) & BREATHERS (21) MUST BE RELOCATED ALSO.
   FEET (76&77) & LIFTING LUGS (63) MUST BE RELOCATED AS SHOWN

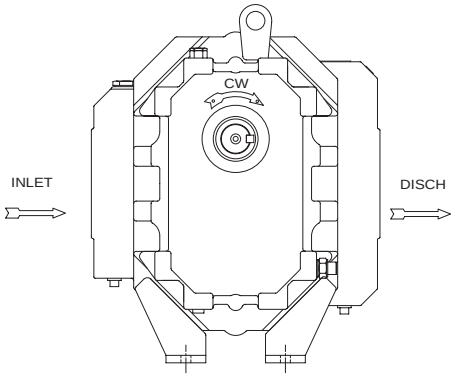

TOP DRV, R.S. DISCH

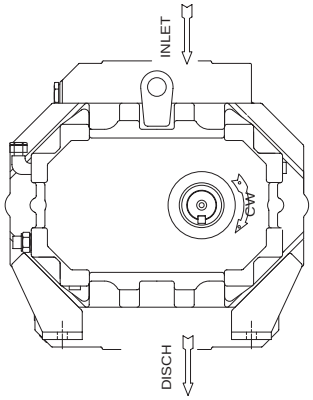

R.H. DRV, BTM DISCH

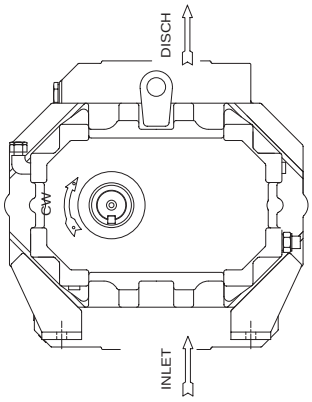

L.H. DRV, TOP DISCH

3. BOTTOM DRIVE SHAFT ARRANGEMENT "SPECIAL ORDER" (3-WAY UNIVERSAL)
   SPECIAL OGE OIL SLINGER REQUIRED FOR ASSEMBLY.
   MAY BE CONVERTED TO HORIZONTAL CONFIGURATION AS PREVIOUSLY SHOWN.

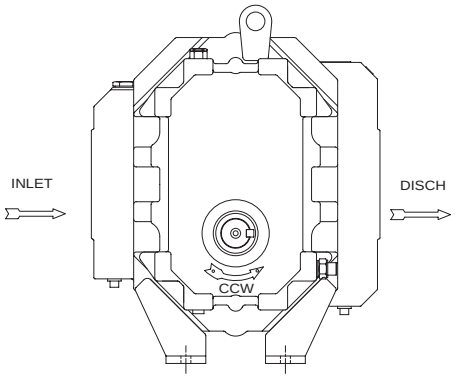

BTM DRV, R.S. DISCH

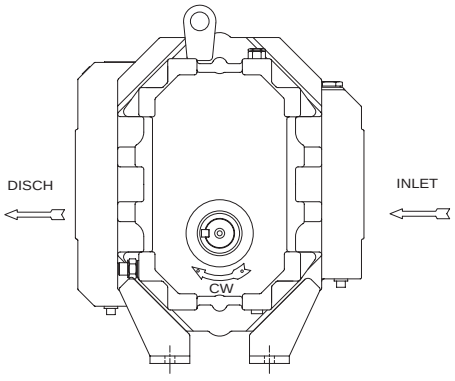

BTM DRV, L.S. DISCH

©2002 Dresser, Inc. all rights reserved.
ROOTS, RAM, URAI and WHISPAIR are trademarks of Dresser, Inc.
Dresser Design and Universal RAI are registered trademarks of Dresser, Inc.

TABLE 1 -

URAI™-J WHISPAIR™ & URAI™-G GAS BLOWER, MAXIMUM ALLOWABLE OPERATING CONDITIONS

Frame Size	Gear Diameter (Inch)	Speed RPM	Temp. Rise F°	(C°)	Delta Pressure PSI	(mbar)	Inlet Vacuum INHG	(mbar)
22	2.5	5275	225	(125)	12	(227)	15	(500)
24	2.5	5275	210	(117)	7	(483)	15	(500)
32	3.5	3600	240	(133)	15	1034	16	(539)
33	3.5	3600	225	(125)	12	(827)	15	(500)
36	3.5	3600	225	(125)	7	(483)	15	(500)
42	4.0	3600	240	(133)	15	(1034)	16	(539)
45	4.0	3600	225	(125)	10	(690)	16	(539)
47	4.0	3600	225	(125)	7	(483)	15	(500)
53	5.0	2850	225	(125)	15	(1034)	16	(539)
56	5.0	2850	225	(125)	13	(896)	16	(539)
59	5.0	2850	225	(125)	7	(483)	15	(500)
65	6.0	2350	250	(130)	15	(1034)	16	(539)
68	6.0	2350	240	(133)	14	(965)	16	(539)
615	6.0	2350	130	(72)	7	(483)	12	(405)
76	7.0	2050	250	(139)	15	(1034)	16	(539)
711	7.0	2050	225	(125)	10	(690)	16	(539)
718	7.0	2050	130	(72)	6	(414)	12	(405)

RAM™, RAM™-J WHISPAIR™ BLOWER, RAM™-GJ GAS BLOWER
MAXIMUM ALLOWABLE OPERATING CONDITIONS

Frame Size	Gear Diameter (Inch)	Speed RPM	Temp. Rise F°	(C°)	Delta Pressure PSI	(mbar)	Inlet Vacuum INHG	(mbar)
404	4.5	4000	240	(133)	18	(1241)	16	(539)
406	4.5	4000	240	(133)	18	(1241)	16	(539)
409	4.5	4000	240	(133)	18	(1241)	16	(539)
412	4.5	4000	240	(133)	15	(1034)	16	(539)
418	4.5	4000	240	(133)	10	(690)	16	(539)
616	6.0	3000	230	(128)	15	(1034)	16	(539)
624	6.0	3000	230	(128)	10	(690)	16	(539)

TABLE 3

RECOMMENDED OIL GRADES

Ambient Temperature °F (°C)	Viscosity Range SSU at 100°F	ISO No.	Approximate SAE No.
Above 90° (32°)	1000-1200	320	60
32° to 90° (0° to 32°)	700-1000	220	50
0° to 32° (-18° to 0°)	500-700	150	40
Below 0° (-18°)	300-500	100	30

UNIVERSAL RAI®, URAI™-J, URAI™-G OIL SUMP CAPACITIES

Frame Size	Capacity Fl. Oz. (Liters)	
	Vertical	Horizontal
22	3.4 (.1)	6.1 (.18)
24	3.4 (.1)	6.1 (.18)
32	8.5 (.25)	16.0 (.47)
33	8.5 (.25)	16.0 (.47)
36	8.5 (.25)	16.0 (.47)
42	12.7 (.37)	22.8 (.67)
45	12.7 (.37)	22.8 (.67)
47	12.7 (.37)	22.8 (.67)
53	16.0 (.47)	27.6 (.82)
56	16.0 (.47)	27.6 (.82)
59	16.0 (.47)	27.6 (.82)
65	28.3 (.84)	52.1 (1.54)
68	28.3 (.84)	52.1 (1.54)
615	28.3 (.84)	52.1 (1.54)
76	32.3 (.96)	59.5 (1.76)
711	32.3 (.96)	59.5 (1.76)
718	32.3 (.96)	59.5 (1.76)

RAM™, RAM™-J & RAM™-GJ OIL SUMP CAPACITIES

Orientation	Gearbox		Drive End	
	Fl. Oz.	(Liters)	Fl. Oz.	(Liters)
400 (Horizontal)	36	1.06	19	.56
400 (Vertical)	18	.52	9	.27
600 (Horizontal)	95	2.81	50	1.48
600 (Vertical)	55	1.63	28	0.83

TABLE 4

SUGGESTED BEARING GREASING INTERVALS

Speed In RPM	Operating Hours Per Day		
	8	16	24
	Greasing Intervals in Weeks		
750-1000	7	4	2
1000-1500	5	2	1
1500-2000	4	2	1
2000-2500	3	1	1
2500-3000	2	1	1
3000 and up	1	1	1

©2002 Dresser, Inc. all rights reserved.
ROOTS, RAM, URAI and WHISPAIR are trademarks of Dresser, Inc.
Dresser Design and Universal RAI are registered trademarks of Dresser, Inc.

TABLE 5

NORMAL CLEARANCES FOR UNIVERSAL RAI® AND URAI™-J, URAI™-G BLOWERS - INCHES (MM)

Frame Size	Impeller Ends			Cylinder		Impeller
	Total	Drive End Minimum	Gear End Minimum	Inlet & Discharge	Center Center	* Fronts/Backs
22	.006/.010 (.15-.25)	.003 (.08)	.003 (.08)	.004/.005 (.10-.13)	.002/.003 (.05-.08)	.007/.01 (.18-.25)
24	.006/.010 (.15-.25)	.003 (.08)	.003 (.08)	.004/.006 (.10-.15)	.002/.003 (.05-.08)	.007/.01 (.18-.25)
32	.006/.011 (.15-.28)	.003 (.08)	.003 (.08)	.004/.006 (.10-.15)	.002/.003 (.05-.08)	.01/.012 (.25-.30)
33	.006/.011 (.15-.28)	.003 (.08)	.003 (.08)	.004/.006 (.10-.15)	.002/.003 (.05-.08)	.01/.012 (.25-.30)
36	.006/.011 (.15-.28)	.003 (.08)	.003 (.08)	.004/.006 (.10-.15)	.002/.003 (.05-.08)	.01/.012 (.25-.30)
42	.008/.011 (.20-.28)	.004 (.10)	.004 (.10)	.005/.007 (.13-.18)	.003/.004 (.08-.10)	.009/.012 (.23-.30)
45	.008/.013 (.20-.33)	.004 (.10)	.004 (.10)	.005/.007 (.13-.18)	.003/.004 (.08-.10)	.012/.015 (.30-.38)
47	.008/.013 (.20-.33)	.004 (.10)	.004 (.10)	.005/.007 (.13-.18)	.003/.004 (.08-.10)	.012/.015 (.30-.38)
53	.008/.011 (.20-.28)	.004 (.10)	.004 (.10)	.005/.008 (.13-.20)	.003/.004 (.08-.10)	.011/.013 (.28-.33)
56	.008/.013 (.20-.33)	.004 (.10)	.004 (.10)	.005/.008 (.13-.20)	.003/.004 (.08-.10)	.015/.017 (.38-.43)
59	.008/.013 (.20-.33)	.004 (.10)	.004 (.10)	.005/.008 (.13-.20)	.003/.004 (.08-.10)	.015/.017 (.38-.43)
65	.012/.016 (.30-.40)	.008 (.20)	.004 (.10)	.006/.008 (.15-.20)	.006/.008 (.15-.20)	.010/.014 (.25-.36)
68	.014/.018 (.36-.46)	.010 (.25)	.004 (.10)	.006/.008 (.15-.20)	.006/.008 (.15-.20)	.010/.014 (.25-.36)
615	.014/.018 (.36-.46)	.010 (.25)	.004 (.10)	.006/.008 (.15-.20)	.006/.008 (.15-.20)	.010/.014 (.25-.36)
76	.012/.016 (.30-.40)	.008 (.13)	.004 (.10)	.006/.008 (.15-.20)	.006/.008 (.15-.20)	.013/.015 (.33-.38)
711	.014/.018 (.36-.46)	.010 (.25)	.004 (.10)	.006/.008 (.15-.20)	.006/.008 (.15-.20)	.013/.015 (.33-.38)
718	.014/.018 (.36-.46)	.010 (.25)	.004 (.10)	.006/.008 (.15-.20)	.006/.008 (.15-.20)	.013/.015 (.33-.38)

*** IMPELLER TIMING FOR STANDARD ROTATION VIEWED FROM GEAR END**

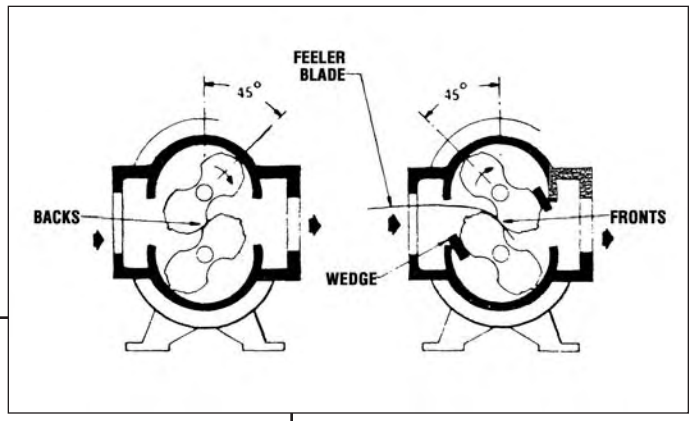

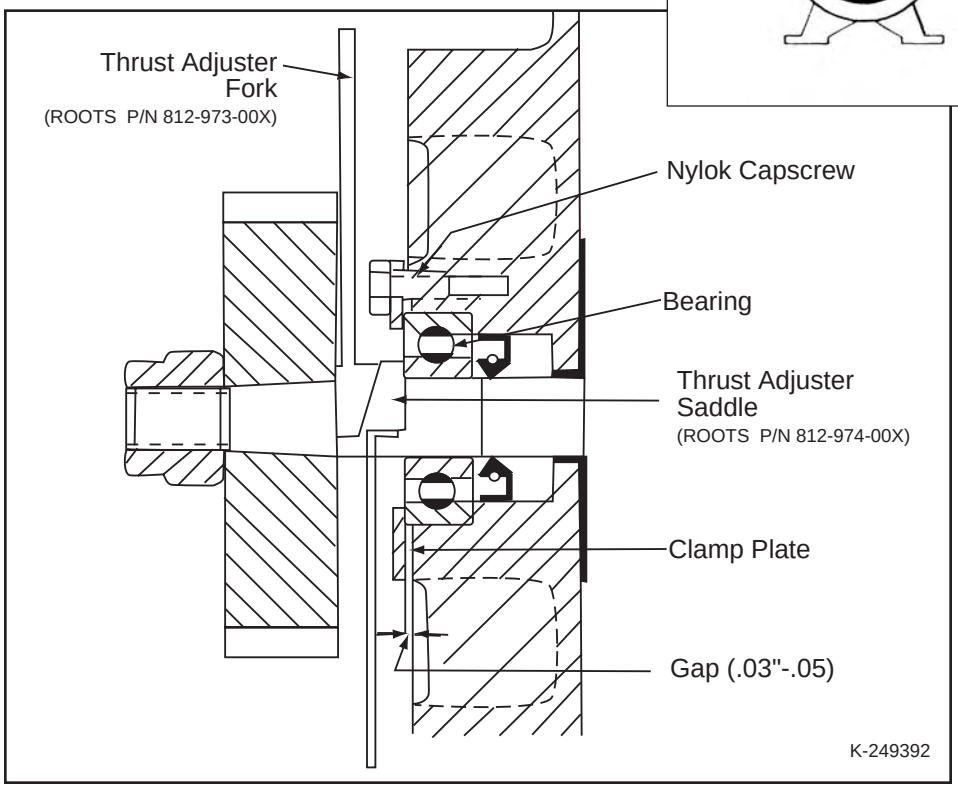

THRUST SETTING, 2-1/2" THRU 5" UNIVERSAL RAI® BLOWERS

TABLE 6

NORMAL CLEARANCES FOR RAM™-J & RAM™-GJ WHISPAIR™ BLOWERS - INCHES (MM)

Blower Frame Size	* Impeller Lobes at 45°		End Clearance			Impeller Tips to Cylinders		
	Fronts	Backs	Each End Without Wavy Spring	Gear End Without Spring Installed	Required End Float	Inlet	Center	Discharge
	Min-Max	Min-Max	Min-Max	Min-Max	Minimum	Min-Max	Min-Max	Min-Max
404	.012-.014	.006-.009	.003-.005	.003-.008	.003	.004-.006	.002-.004	.002-.004
	(.31-.36)	(.15-.23)	(.08-.13)	(.10-.15)	(.08-.20)	(.08)	(.05-.10)	(.05-.10)
406	.012-.014	.006-.009	.003-.005	.007-.012	.006	.005-.007	.003-.005	.002-.004
	(.31-.36)	(.15-.23)	(.08-.13)	(.15-.30)	(.13)	(.13-.18)	(.08-.13)	(.05-.10)
409	.013-.015	.006-.009	.003-.005	.013-.018	.008	.005-.007	.003-.005	.002-.004
	(.33-.38)	(.15-.23)	(.08-.13)	(.31-.43)	(.17)	(.13-.18)	(.08-.13)	(.05-.10)
412	.013-.015	.006-.009	.003-.005	.016-.021	.011	.006-.008	.004-.006	.004-.006
	(.33-.38)	(.15-.23)	(.08-.13)	(.36-.48)	(.28)	(.15-.20)	(.10-.15)	(.10-.15)
418	.013-.015	.006-.009	.003-.005	.022-.027	.017	.008-.010	.004-.006	.004-.006
	(.33-.38)	(.15-.23)	(.08-.13)	(.51-.64)	(.38)	(.20-.25)	(.10-.15)	(.10-.15)
616	.012-.014	.006-.008	.004-.006	.017-.022	.011	.009-.011	.004-.006	.002-.005
	(.31-.36)	(.15-.20)	(.10-.15)	(.38-.51)	(.28)	(.23-.28)	(.10-.15)	(.05-.13)
624	.012-.015	.006-.009	.004-.006	.024-.029	.018	.013-.015	.005-.007	.002-.005
	(.31-.36)	(.15-.23)	(.10-.15)	(.61-.74)	(.46)	(.33-.38)	(.13-.18)	(.05-.13)

NORMAL CLEARANCES FOR RAM™ BLOWERS - INCHES (MM)

Blower Frame Size	* Impeller Lobes at 45°		End Clearance			Impeller Tips to Cylinders		
	Fronts	Backs	Each End Without Wavy Spring	Gear End Without Spring Installed	Required End Float	Inlet	Center	Discharge
	Min-Max	Min-Max	Min-Max	Min-Max	Minimum	Min-Max	Min-Max	Min-Max
404	.009-.013	.009-.013	.003-.005	.003-.008	.003	.004-.006	.002-.004	.004-.006
	(.23-.33)	(.23-.33)	(.08-.13)	(.08-.20)	(.08)	(.10-.15)	(.05-.10)	(.10-.15)
406	.009-.013	.000-.013	.003-.005	.007-.012	.006	.005-.007	.003-.005	.005-.007
	(.23-.33)	(.23-.33)	(.08-.13)	(.15-.30)	(.13)	(.13-.18)	(.08-.13)	(.13-.18)
409	.010-.014	.010-.014	.003-.005	.013-.018	.008	.005-.007	.003-.005	.005-.007
	(.25-.36)	(.25-.36)	(.08-.13)	(.31-.43)	(.17)	(.13-.18)	(.08-.13)	(.13-.18)
412	.010-.014	.010-.014	.003-.005	.016-.021	.011	.006-.008	.004-.006	.006-.008
	(.25-.36)	(.25-.36)	(.08-.13)	(.36-.48)	(.28)	(.15-.20)	(.10-.15)	(.15-.20)
418	.010-.014	.010-.014	.003-.005	.022-.027	.017	.008-.010	.004-.006	.008-.010
	(.25-.36)	(.25-.36)	(.08-.13)	(.51-.64)	(.38)	(.20-.25)	(.10-.15)	(.20-.25)
616	.011-.013	.011-.013	.004-.006	.017-.022	.011	.009-.011	.004-.006	.009-.011
	(.28-.33)	(.28-.33)	(.10-.15)	(.38-.51)	(.28)	(.23-.28)	(.10-.15)	(.23-.28)
624	.011-.013	.011-.013	.004-.006	.024-.029	.018	.013-.015	.005-.007	.013-.015
	(.28-.33)	(.28-.33)	(.10-.15)	(.61-.74)	(.46)	(.33-.38)	(.13-.18)	(.33-.38)

* IMPELLER TIMING FOR STANDARD ROTATION VIEWED FROM GEAR END

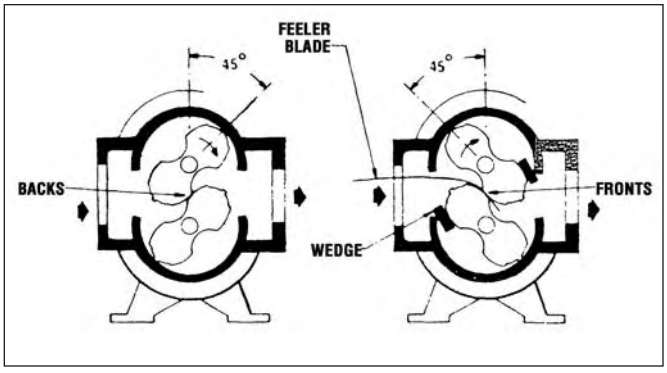

©2002 Dresser, Inc. all rights reserved.
ROOTS, RAM, URAI and WHISPAIR are trademarks of Dresser, Inc.
Dresser Design and Universal RAI are registered trademarks of Dresser, Inc.

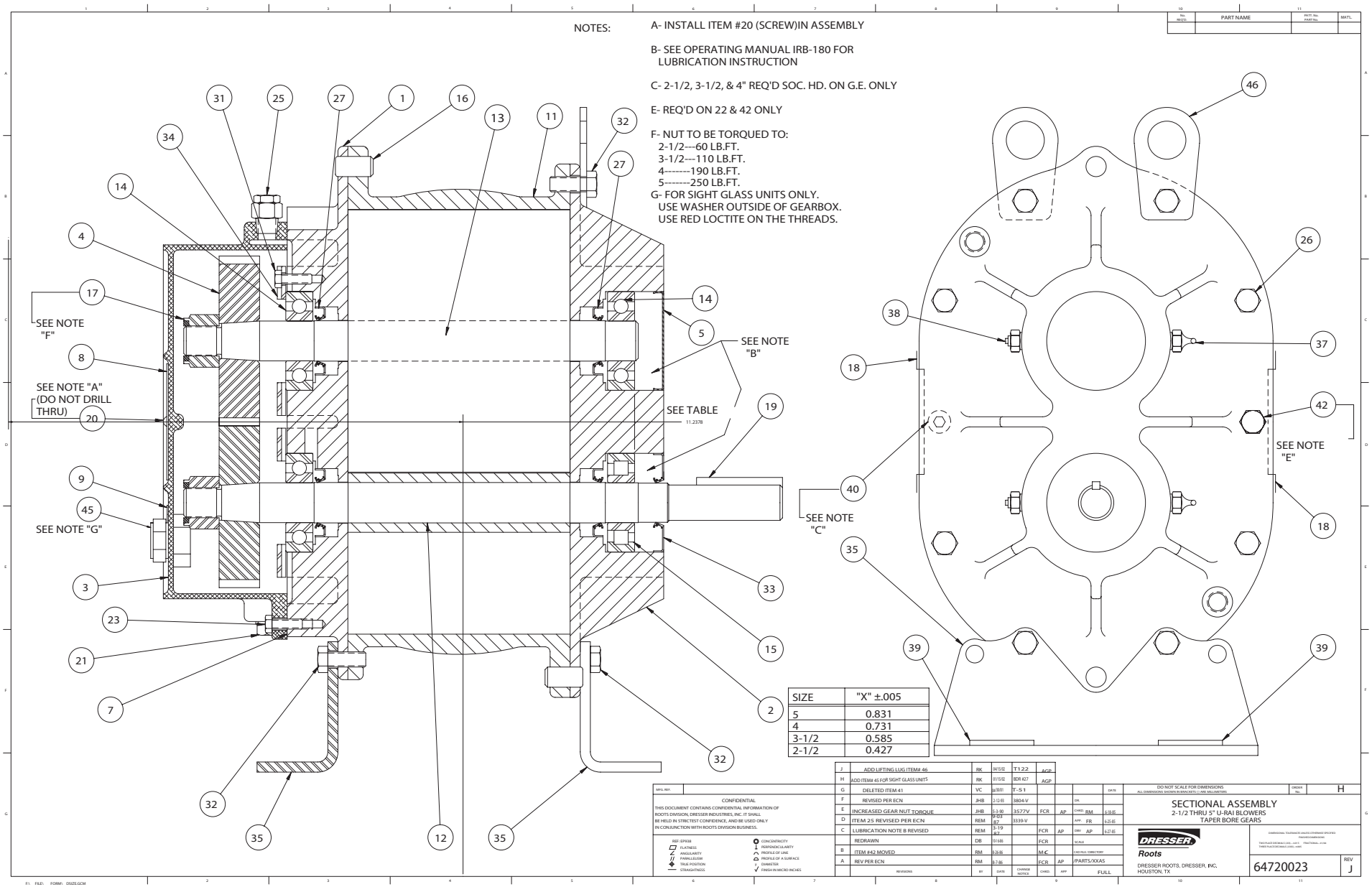

ASSEMBLY OF UNIVERSAL RAI® SERIES, AIR BLOWERS, 2-1/2" THRU 5" GEAR DIAMETER

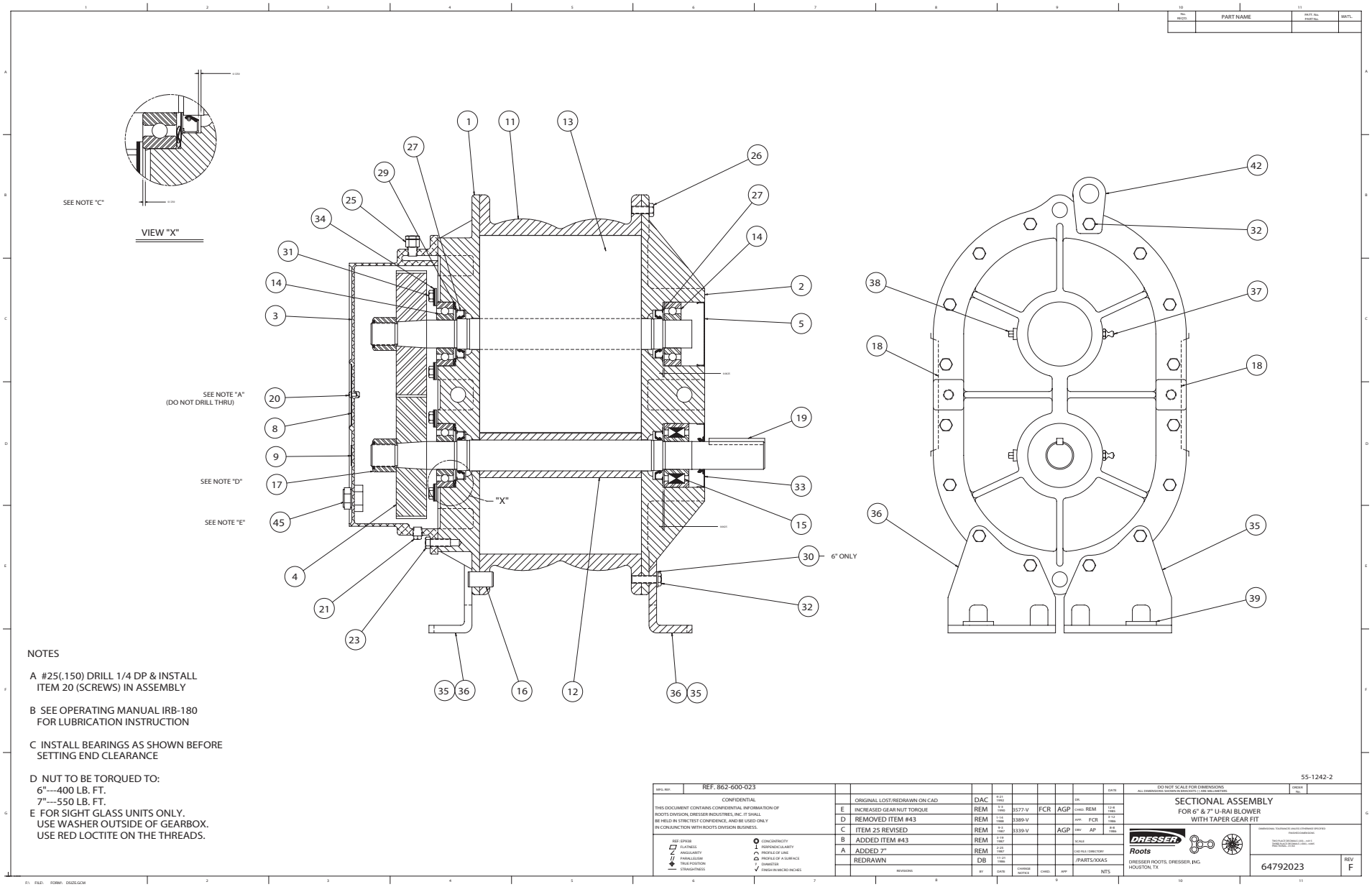

ASSEMBLY OF UNIVERSAL RAI® BLOWERS, 6" AND 7" DIAMETER

©2002 Dresser, Inc. all rights reserved.
ROOTS, RAM, URAI and WHISPAIR are trademarks of Dresser, Inc.
Dresser Design and Universal RAI are registered trademarks of Dresser, Inc.

For your nearest ROOTS Office, dial our Customer Service Hot Line 1 877 363 ROOTS (7668).

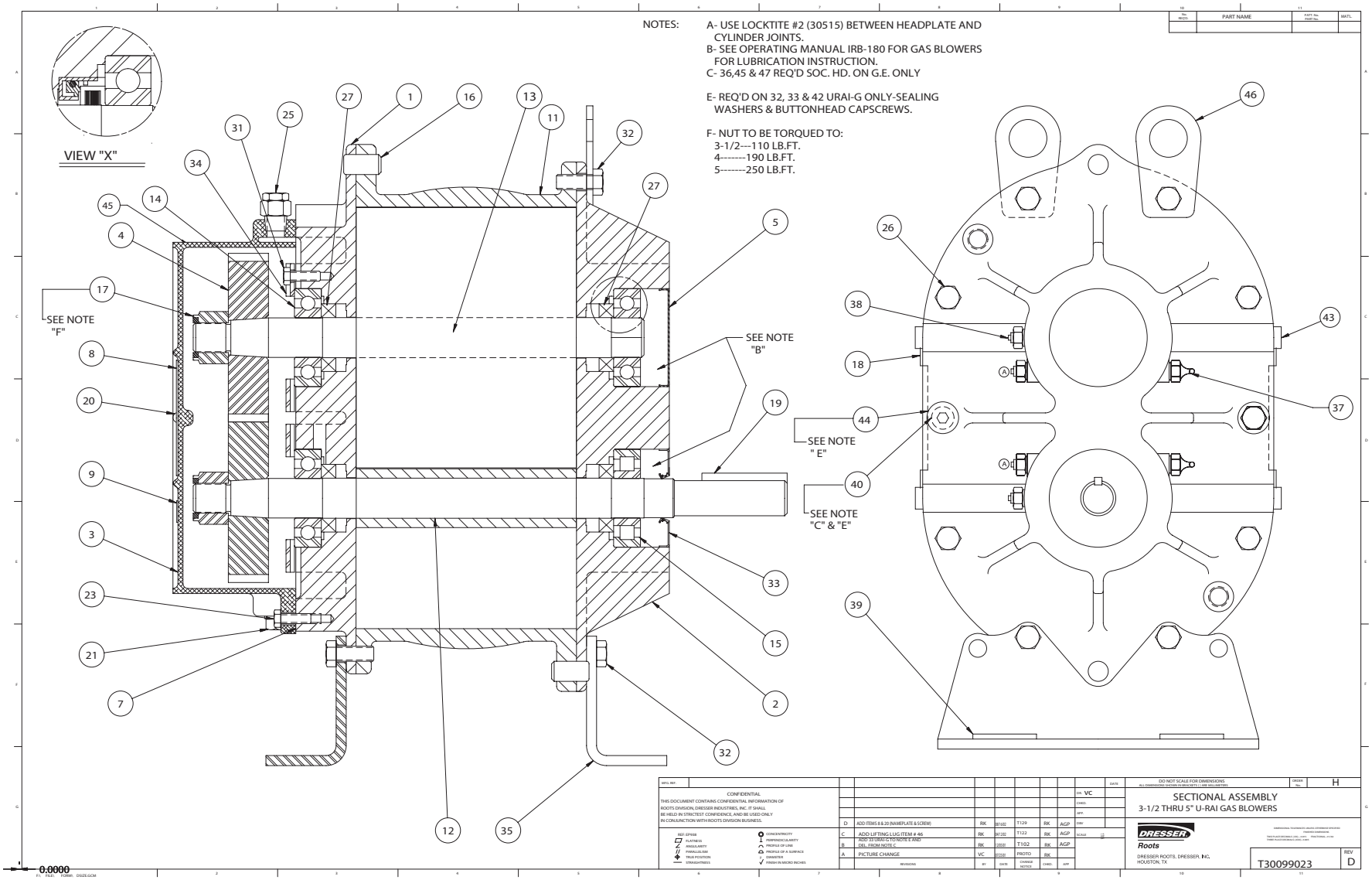

ASSEMBLY OF UNIVERSAL RAI™-G SERIES GAS BLOWERS, 3-1/2"THRU 5" GEAR DIAMETER

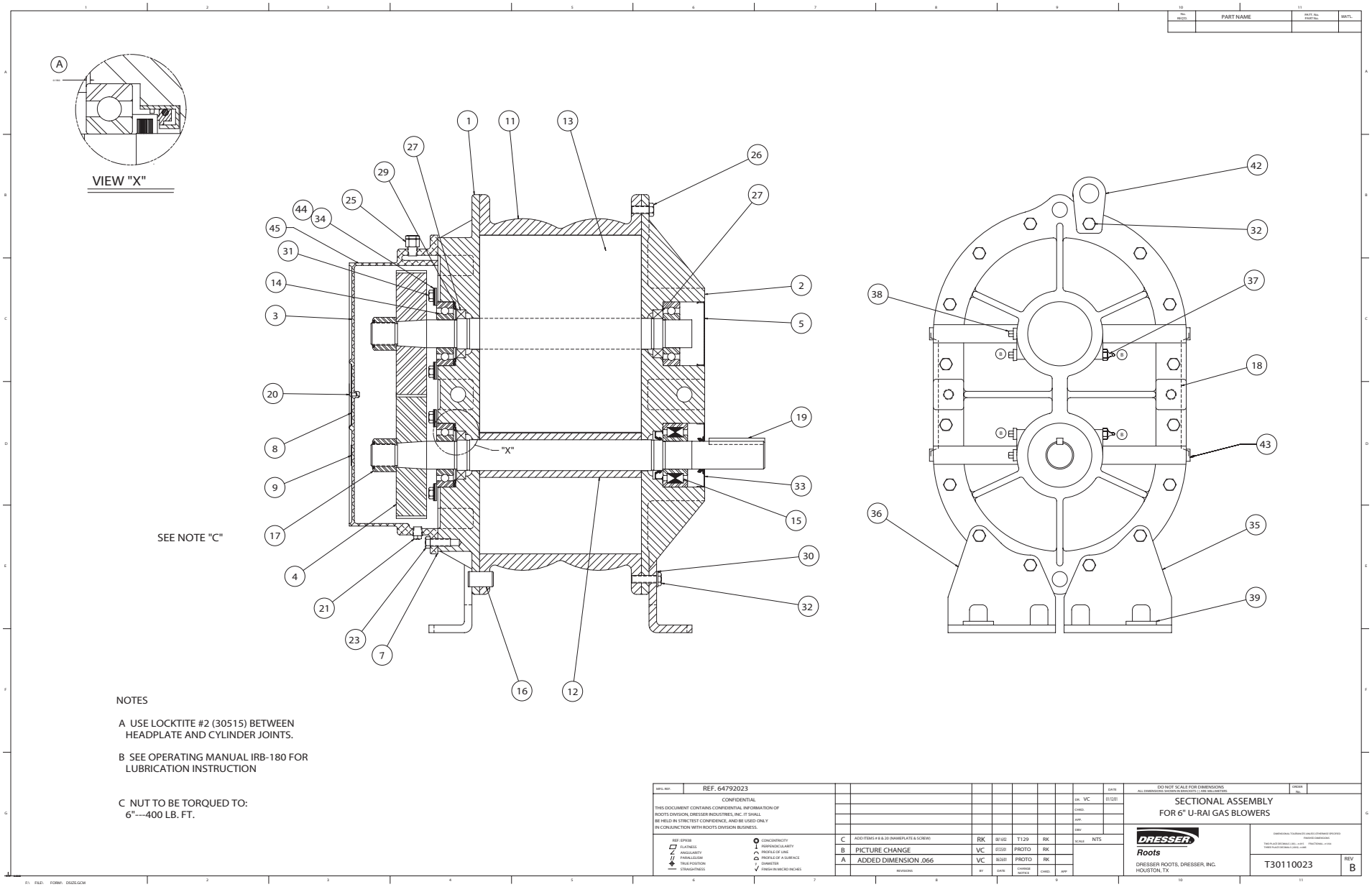

ASSEMBLY OF UNIVERSAL RAI® SERIES GAS BLOWERS, 6" GEAR DIAMETER

©2002 Dresser, Inc. all rights reserved.
ROOTS, RAM, URAI and WHISPAIR are trademarks of Dresser, Inc.
Dresser Design and Universal RAI are registered trademarks of Dresser, Inc.

For your nearest ROOTS Office, dial our Customer Service Hot Line 1 877 363 ROOTS (7668).

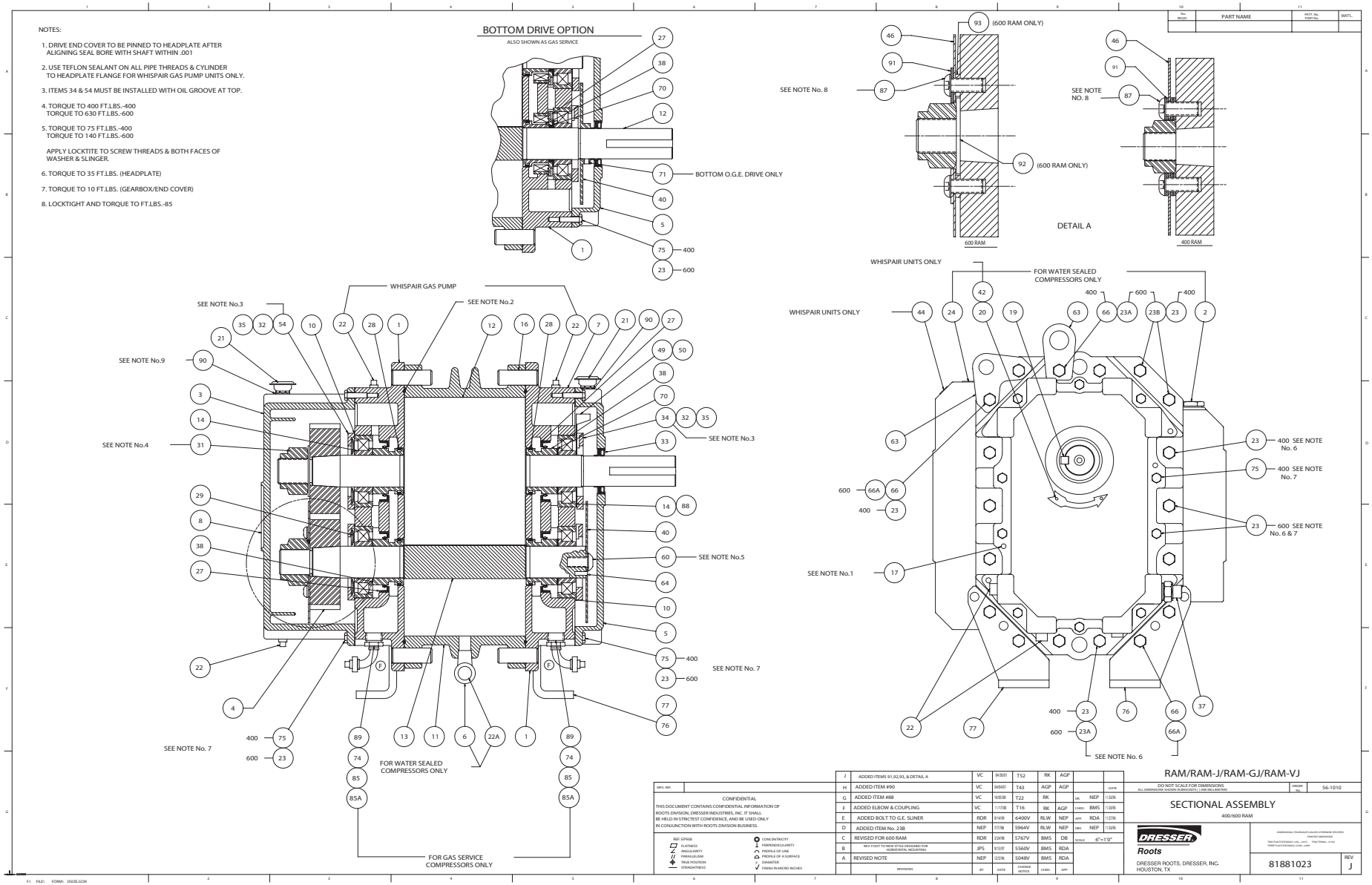

ASSEMBLY OF RAM™ SERIES AIR & GAS BLOWERS

UNIVERSAL RAI® SERIES BLOWERS PARTS LIST

Item No.	Part Name	Qty.
1	Headplate Gear End	1
2	Headplate Drive End	1
3	Gearbox	1
4	Gears	1
5	Cover-Blind (Plug Opening)	1
7	Gasket	1
9	Nameplate Lube	1
14	Bearing G.E., - Driven	3
15	Bearing Drive D.E., - Drive	1
16	Pin, Dowel	4
17	Gear Nut	2
19	Key	1
20	Screw, Self Tap	1
21	Plug, Pipe	3
23	Screw Hex	6
25	Breather (Plug Vent)	1
26	Screw, Hex	14
27	Seal	4
29	Washer - wavy Spring	2
30	Washer	8
31	Screw, Hex	4
32	Screw, Hex	4
33	Seal Lip-Drive	1
34	Clamp Plate	2
35	Foot	2
36	Foot	2
37	Fitting, Grease	2
38	Fitting, Relief	2
39	Washer Flat	4
40	Screw Socket	2
40*	Screw, Button Hd.	4
42	Screw Hex	2
43	Plug	8
44*	Washer	4

*For 32 and 42 URAI-G only.

©2002 Dresser, Inc. all rights reserved.
ROOTS, RAM, URAI and WHISPAIR are trademarks of Dresser, Inc.
Dresser Design and Universal RAI are registered trademarks of Dresser, Inc.

RAM™ SERIES PARTS LIST

Item No.	Part Name	Qty.
01	Headplate	2
03	Gearbox	1
04	Gear, Assembly	1
05	End Cover	1
07	Gasket – Gearbox/Cover	2
09	Installation Tag	2
10	Shims-(.010)	Lot
14	Bearing Roller	4
16	Pin, Dowel (Pull Out)	4
17	Pin, Dowel	2
19	Key Square	1
20	Screw, Drive - Rd. Hd.	4
21	Breather	2
22	Plug, Pipe	12
23	Screw, Cap Hex Hd.	24
27	Seal, (Viton)	4
28	Piston, Ring-Seal	4
29	Washer, Wavy Spring	2
31	Nut, Hex ESNA	2
32	Scr, Cap Hex Hd.	16
33	Seal, Lip	1
34	Brg. Clamp Plate - D. E.	2
35	Lock Washer - Spring	16
37	Sight Plug - Oil Level	2
38	Sleeve - GE & DE	4
38	Sleeve - Piston Ring	4
40	Slinger - D.E. (Top Drive)	1
40	Slinger - D. E. (Bottom Drive)	1
42	Rotation Arrow	1
44	Label	1
46	Slinger - G.E.	1
49	Oil Leader L/S	1
50	Oil, Leader-R/S	1
54	Brg Clamp Plate - G. E.	2
60	Screw, Cap Butt. HD.	1
63	Lifting Lug	2
64	Pin, Spring	1
66	Screw, Cap Hex HD.	12
66.1	Whispair, Spring Lock 3/8M	12
70	Shims D.E. Brg.	1
75	Screw, Cap - Hex HD.	20
76	Blower Foot - RH	2
77	Blower Foot - LH	2
85	Elb, Pipe-Black	2
85.1	Plug, Pipe	2
87	Scr, Cap BH	2
88	Ball Spherical	4
90	BSHG-RDCG	2
91	Washer, Plain Flat	2
92	Washer, Plain Flat	2
93	Washer	2

NOTES

CONTACT LIST

CUSTOMER SERVICE

Dresser ROOTS
2135 Hwy 6 South
Houston, TX 77077
Toll Free Hot Line: 1-877-363-ROOT(S) (7668)
Toll Free Fax: 1-877-357-7238
Local Fax: 281-966-4309

ROOTS Factory Service & Repair Center
11611B Tanner RD
Houston, TX 77041
Toll Free: 1-800-866-6182
Local Phone: 713-896-4810
Local Fax: 713-896-4927

Service & Warranty
Toll Free: 1-800-866-6182
Local Phone: 832-467-4614
Local Fax: 713-896-4927

Dresser, Inc.

DRESSER
Roots

Dresser ROOTS 2135 Hwy 6 South Houston, TX 77077 PH: 281-966-4700 FX: 281-966-4309 Toll Free: 1-877-363-ROOT(S)	Dresser ROOTS - Connersville 900 West Mount Street Connersville, IN 47331 PH: 765-827-9200 FX: 765-827-9266	Dresser ROOTS - Holmes Operation PO Box B7 Off St. Andrews Rd Turnbridge, Huddersfield England HD1 6RB PH: +44-1484-422222 FX: +44-1484-422668

IRB-180-102
Rev. 12.02

website: www.rootsblower.com • email: ROOTS@dresser.com

©2002 Dresser, Inc. all rights reserved.
ROOTS, RAM, URAI and WHISPAIR are trademarks of Dresser, Inc.
Dresser Design and Universal RAI are registered trademarks of Dresser, Inc.

800-536-9933
www.pdblowers.com

PERFORMANCE BASED ON AIR,
INLET AT 14.7 PSIA & 68^{0}F
DECEMBER 2004

PRESSURE PERFORMANCE
FRAME 718 U-RAI
MAX. PRESSURE RISE = 6 PSI
MAX. SPEED = 2050 RPM

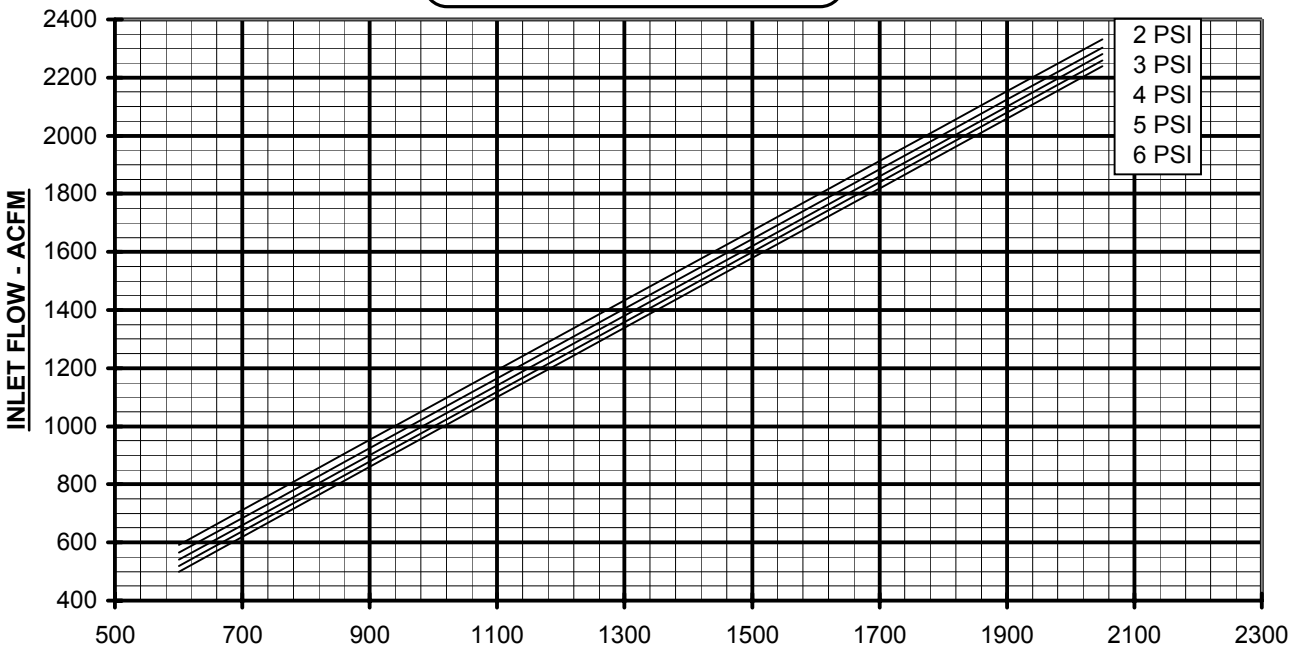

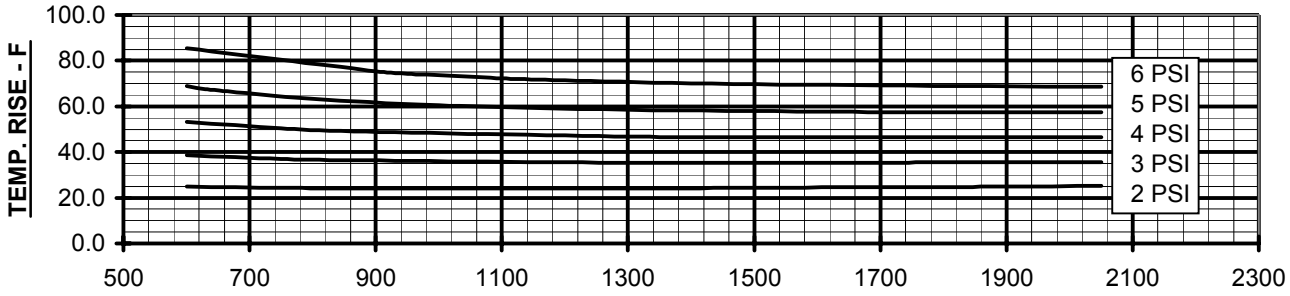

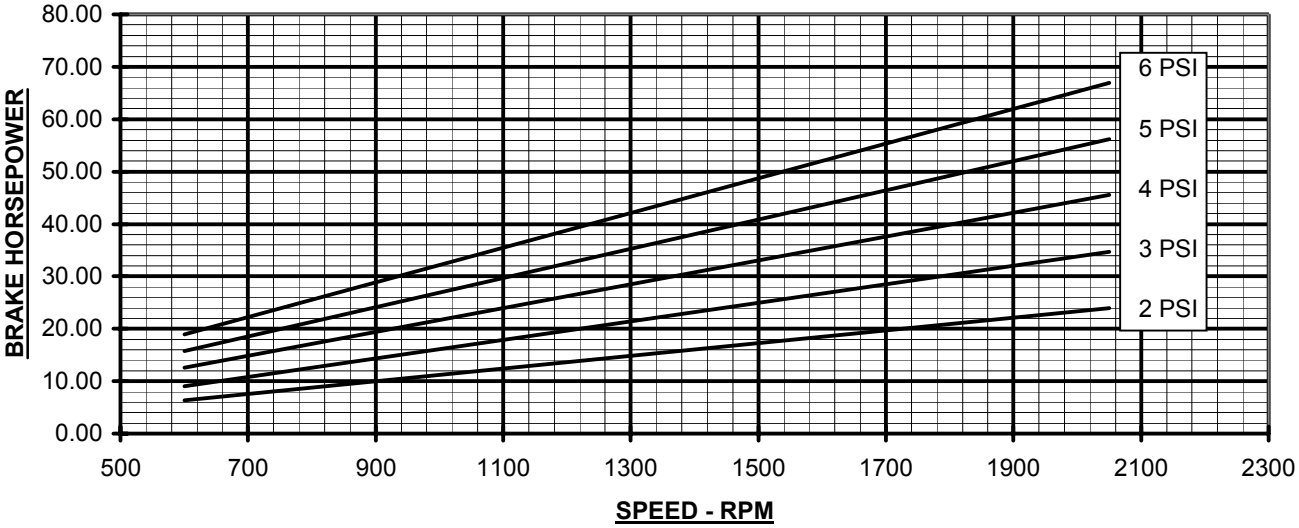

PC-12-718

800-536-9933
www.pdblowers.com

VACUUM PERFORMANCE
FRAME 718 U-RAI
MAX. VACUUM = 12" HG
MAX. SPEED = 2050 RPM

PERFORMANCE BASED ON AIR,
INLET AT 68^{0}F
DISCHARGE PRESSURE = 30" HG ABS.
DECEMBER 2004

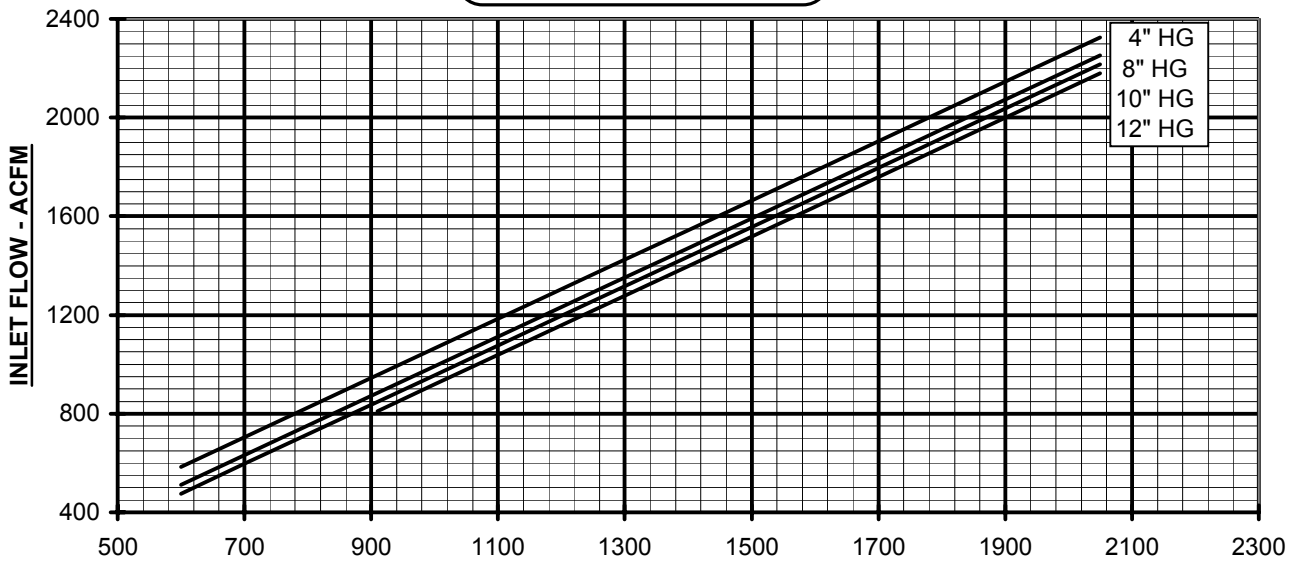

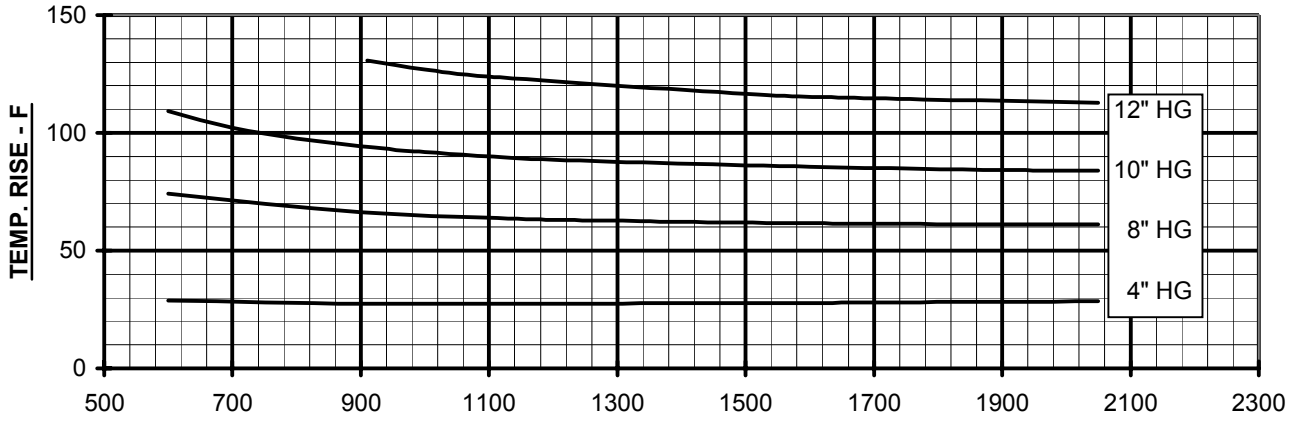

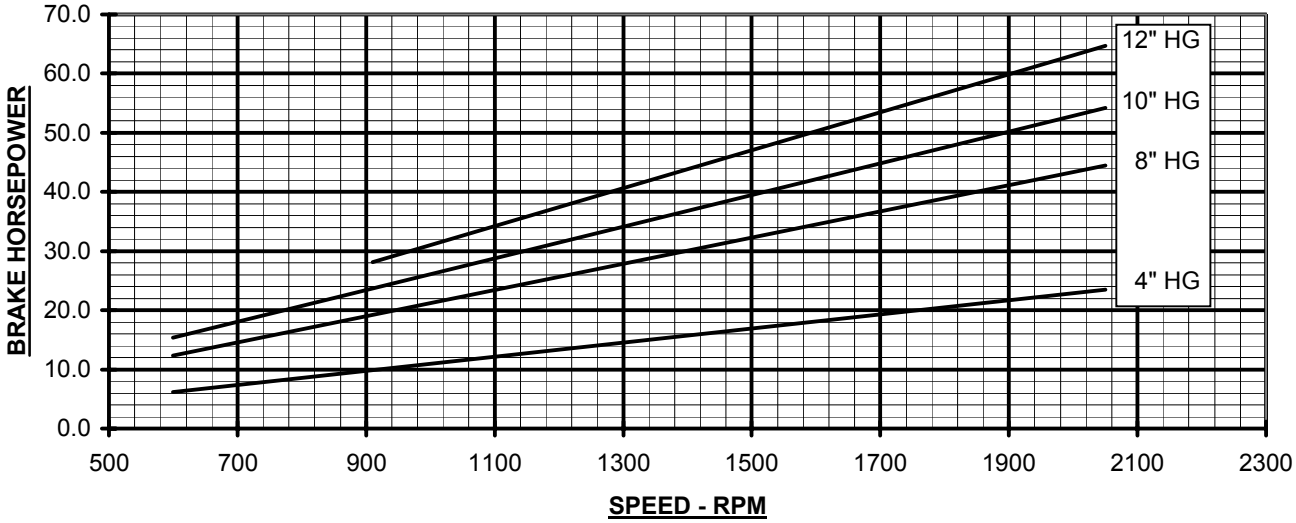

VC-12-718

Categories

□lectric Motors
Motor Dri□es
□□□ Co□ □ro□□cts
Motor Controls
Motor Bra□es
□eare□ □ro□□ct

Products From:

LEESON
ELECTRIC MOTORS GEARMOTORS AND DRIVES
Lincoln MOTORS
"Over 100 Years of Excellence in Motors"
SymCom ...your electronic control & protection specialists
BALDOR BALDOR · DODGE · RELIANCE
GROVE GEAR Driven to be the Best
EE CONTROLS

□o□e □ □lectric Motors □ □□□□□□ □lectric Motors □ □□□□□□ □hree □hase □□lectric Motors □ □□□□□□ □hree □hase □□□C Watt□a□er Motors □ □0□□ □□□□□□ 1□□0□□M 3□4□ □□□C 3□□ M□□□□ 1□002□

60HP LEESON 1790RPM 364T TEFC 3PH MOTOR 170027

LEESON Catalog Number: 170027.60
Description: 60HP,1790RPM,364T,TEFC,3PH,60/50HZ
Ship Weight: 899 lbs.

Features | Product Specifications | Files

The WATTSAVER line o□pre□i□□ e□icienc□ □otors is no□ in□erter capa□le□ □□□□□□s □ni□□e □□□ □oltage□spi□e □resistant ins□lation s□ste□ is stan□ar□ at no extra cost□W□□□□□□□□ □otors carr□a three□□ear □arrant□in general p□rpose an□in□erter □e□applications□□hese □otors □eet or excee□ □ost □tilit□re□ate progra□s an□the □□□C□ □e□erall□□an□ate□e□icienc□le□els□ □he e□icienc□ratings ha□e □een □eri□ie□to □□□□ co□pliant □sing the c□sto□ □D□ progra□ □

LEESON WATTSAVER □otor speci□ications not a□aila□le at this ti□e□

Clic□ □□age to □nlarge
Man□act□rer □art □□□ □er□1□002□□□0
□toc□□1□002□

Price: $3,459.00
Co□pare □t□□□,234□00

Quantity: 1

□□□ □o Cart

Related Products

SymCom 460 MotorSaver
□□2□00

Product Reviews

There are currently no customer reviews for this product.

Be the first to write a review!
We □al□e □o□r opinion□□lease ta□e a □o□ent an□share □hat □o□li□e or □on't li□e a□o□t a pro□□ct□

Write a re□ie□ no□

Cop□right 2011 □lectric Motor Wholesale□co□, □ll □ights □eser□e□ □ri□ac□□olic□ | □et□rn □olic□

Authorize.Net Click MERCHANT

ELECTRIC MOTOR WHOLESALE.COM

C□sto□ We□site Design □□□Dela□are□□et

SS622180LE

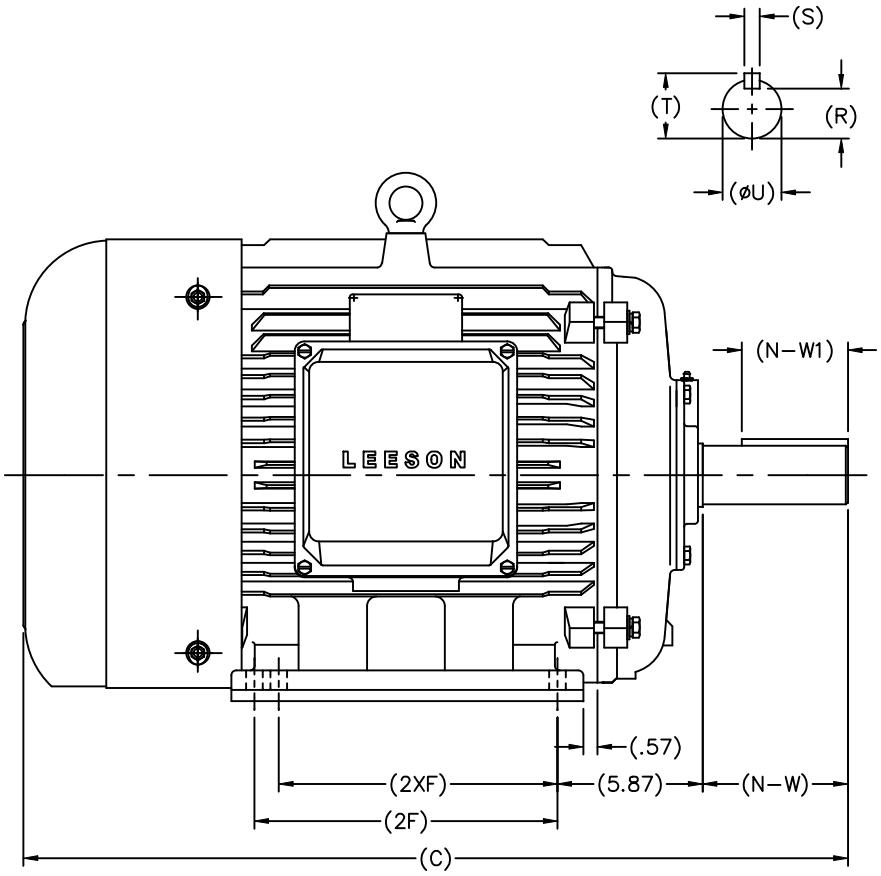

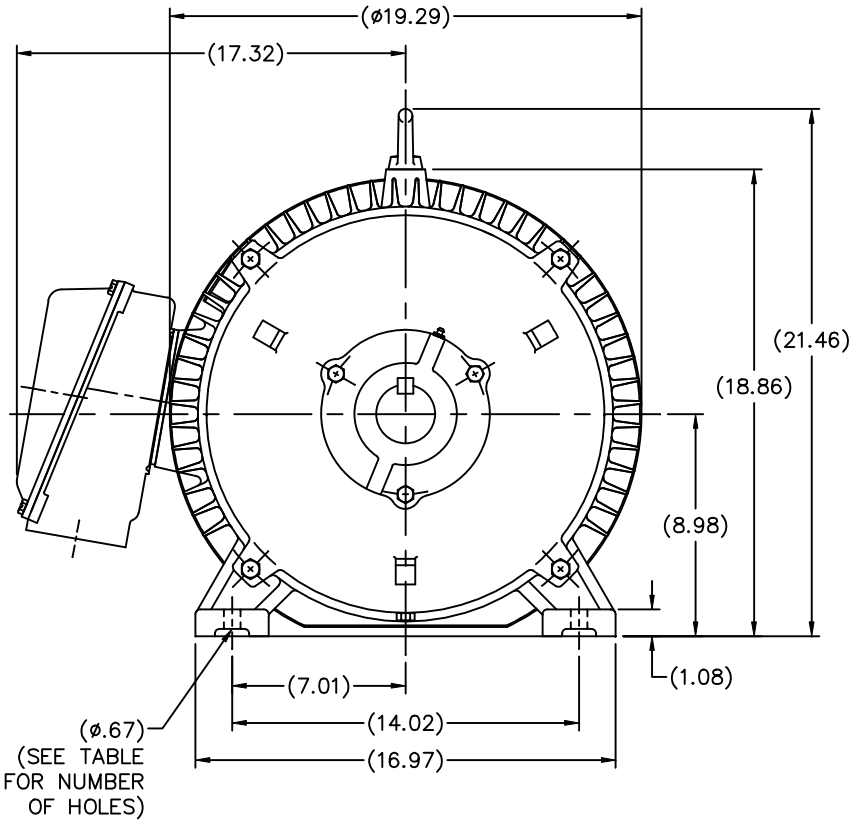

FRAME	C	2F	2XF	HOLES	N–W	N–W1	øU	R	S	T
NT364TS–2	30.20	11.26	---	4	3.74	2.05	1.87	1.59	0.50	2.09
NT365TS–2	31.18	12.24	11.26	6						
NT364T–4, 6	32.32	11.26	---	4	5.87	4.29	2.37	2.01	0.63	2.64
NT365T–4, 6	33.31	12.24	11.26	6						

NO.	REVISION	BY & DATE	CHK

THIS DRAWING IN DESIGN AND DETAIL IS OUR PROPERTY AND MUST NOT BE USED EXCEPT IN CONNECTION WITH OUR WORK ALL RIGHTS OF DESIGN AND INVENTION ARE RESERVED
THIS IS AN ELECTRONICALLY GENERATED DOCUMENT – DO NOT SCALE THIS PRINT

TOLERANCES UNLESS SPECIFIED	
DEC.	INCHES
.X	±.1
.XX	±.03
.XXX	±.005
.XXXX	±.0005
ANG	±7'30"

LEESON ELECTRIC MOTORS GEARMOTORS AND DRIVES

TITLE OUTLINE
360 FR. – TEFC – (REDESIGNED)

MAT'L.
FINISH
CAD FILE SS622180LE
RFP
DIST

DRAWN MSG	02–13–2007
CHK ML	02–16–2207
APPD SB	02–23–2007
SCALE	1=5
REF	
FMF	HEBEI
PREV	

SIZE	DRAWING NO.	PAGE	OF	REV.
B	SS622180LE			

7/26/2007 1:23:43 PM -

004172-01

WYE – DELTA STARTING USEABLE ON 2,4 AND 6 POLE MOTORS.

LOW VOLTAGE CONNECTION

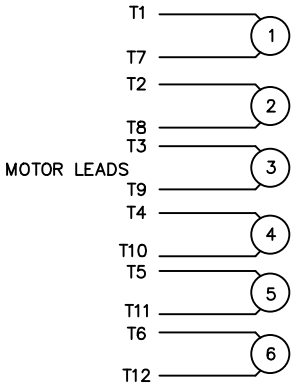

HIGH VOLTAGE CONNECTION

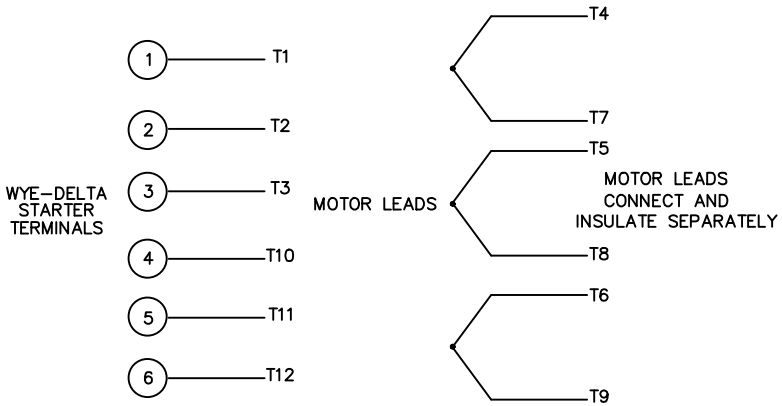

REFER TO THE WYE–DELTA STARTER CONNECTION INSTRUCTIONS FOR PROPER CONNECTION OF POWER LINES TO STARTER.

PART WINDING START USABLE ON 4 & 6 POLE MOTORS
LOW VOLTAGE CONNECTION ONLY

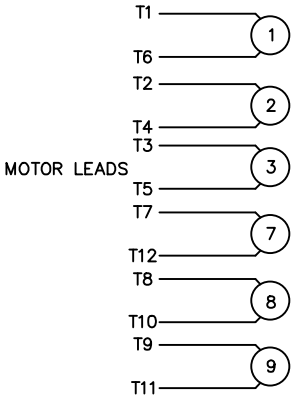

REFER TO THE PART WINDING STARTER INSTRUCTIONS FOR PROPER CONNECTION OF POWER LINES TO STARTER.

REFER TO THE CUTLER – HAMMER OR EQUIV. FOR PROPER SELECTION OF OVERLOAD HEATER COILS.

LINE LEADS

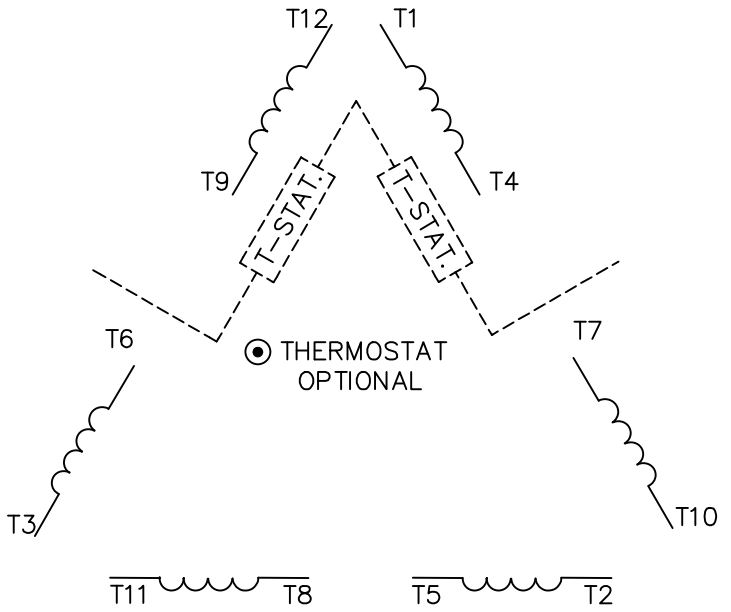

ROTATION CAN BE REVERSED BY INTERCHANGING ANY TWO LINE LEADS

⦿ RED LEADS OR P1, P2, FOR N/C THERMOSTAT

ACROSS THE LINE START & RUN

	LINE 1	LINE 2	LINE 3	JOIN & INSULATE SEPARATELY
HIGH VOLT	T1,T12	T2,T10	T3,T11	(T4,T7) (T5,T8) (T6,T9)
LOW VOLT	T1,T6 T7,T12	T2,T4 T8,T10	T3,T5 T9,T11	

NO.	REVISION	BY & DATE	CHK
03	REV'D LOW VOLTAGE CONN. LEADS PER ELEC.	BJB 06/07/00	
02	ADDED T–STAT. NOTES PER ELECTRICAL	KMM 06/02/98	
01	REDRAWN TO CAD	DBT 06/02/97	

TOLERANCES UNLESS SPECIFIED

DEC.	INCHES
.X	±.1
.XX	±.01
.XXX	±.005
.XXXX	±.0005
ANG	±1/2°

LEESON ELECTRIC MOTORS GEARMOTORS AND DRIVES

TITLE DELTA – WYE CONNECTION DIAGRAM

MAT'L.

FINISH

CAD FILE 00417201

RFP

DIST

DRAWN	WLW 09/08/77
CHK	RPB 09/12/77
APPD	JCW 09/12/77
SCALE	1=1
REF	
FMF	
PREV	

SIZE A | DRAWING NO. 004172–01 | REV. 03

THIS DRAWING IN DESIGN AND DETAIL IS OUR PROPERTY AND MUST NOT BE USED EXCEPT IN CONNECTION WITH OUR WORK ALL RIGHTS OF DESIGN AND INVENTION ARE RESERVED
THIS IS AN ELECTRONICALLY GENERATED DOCUMENT – DO NOT SCALE THIS PRINT

6/28/2007 3:22:15 PM -

redrive 1 847 886 2616

Home Contact Newsletter Returns Login Company View Cart

Search

Categories

- CNC Control parts
- Drives / Inverters / Spindle
- Contactors / Electromechanical Components
- Electronic Components
- Motors
- PCB (Printed Circuit Boards)
- Power supply
- Repair services
- Servo drives
- Replacement Parts / Optional equipment / Accessories
- Manuals / Drawings

Login

Login

Password

Login

secure login | lost password?

Quick Quote

Internet Authorized Retailer

GeoTrust

MasterCard VISA

Google Checkout Accepted

PayPal

UPS FedEx

eBay Stores

GP10E9ST34060B1 Saftronics AC DRIVE GP-104060-9 60HP

only $2499.00

Be the first person to review this product

Item #: GP10E9ST34060B1

Our Price: $2,499.00
Retail Price: $4,248.00
You Save: $1,749.00

Currently out of stock. Contact us for quote.

Tell a Friend | Printer Friendly Version

click images to enlarge

GP10E9ST34060B1 Saftronics AC DRIVE GP-104060-9 60HP 380-460VAC

Condition: Used. Tested. Fully refurbished. 6 Months limited warranty. Repair / Exchange with same day shipping options available.

We will accept best offers! Contact us

Click to see more items from Redrive Inc.

Redrive Inc. provides repair services for Servo Drives, Power Supplies, AC Drives and Printed Circuit Boards.Lowest Prices! Free evaluation!Check it out here!

Specification:

Category	AC Drives Inverters
Part Number	GP10E9ST34060B1 GP-104060-9
Mfg Name	Saftronics Inc.
Rated Input	AC 3PH 380-480VAC 50-60Hz 97Amp
Rated Output	AC 3PH 380-460VAC 60HP 91Amp 0.1-120Hz
Shipping weight	85 lb

Your Cart

There are no items in the shopping cart

Related Items

Teco FM100-401-N1 FM100 Mini AC Drive 1HP 460VAC
$150.00

GP10E1ST34010B1 Saftronics AC DRIVE GP-104010-1 10HP...
$830.00

GPD205-B001 Magnetek 460V 1.5kW AC Drive VFD
$326.55

NEW 3.7kW 400V TECORP HC1-A VFD AC Motor Drive HC1A0...
$390.00

SAFTRONICS GP10

Part No.
GP104060-9

Model No. GP10E9ST34060B1

Serial No.

c UL US LISTED
IND CONT EQ
8B44

CE

Input		Output Variable TQ		Output Constant TQ
Volts	380-440 50Hz 380-480 60Hz	380-460	Volts	380-460
Amps	97	0 1-120	Freq Range(Hz)	0 1-120
Freq (Hz)	50/60	91	Amps	75
Phase(s)	3	110%	Overload (1min)	150%

NEMA Enclosure type: Open
instruction Book : 027-GP1001

SAFTRONICS, INC
Made in Mexico

Close Window

SAFTRONICS

www.saftronics.com

GP10

General Purpose
Open Loop
Vector AC Drive

INSTRUCTION MANUAL

These instructions do not purport to cover all details or variations in equipment, nor to provide every possible contingency to be met during installation, operation, and maintenance. If further information is desired, or if particular problems arise that are not covered sufficiently for the purchaser's purpose, the matter should be referred to Saftronics, Inc., Ft. Myers, FL

This document contains proprietary information of Saftronics and is furnished to its customer solely to assist that customer in the installation, testing, operation, and/or maintenance of the equipment described. This document shall not be reproduced in whole or in part, nor shall its contents be disclosed to any third party without the written approval of Saftronics.

WARNING:

This equipment contains a potential hazard of electric shock or burn. Only personnel who are adequately trained and thoroughly familiar with the equipment and the instructions should install, operate, or maintain this equipment.

Isolation of test equipment from the equipment under test presents potential electrical hazards. If the test equipment cannot be grounded to the equipment under test, the test equipment's case must be shielded to prevent contact by personnel.

To minimize hazard of electrical shock or burn, approved grounding practices and procedures must be strictly followed.

WARNING:

To prevent personal injury or equipment damage caused by equipment malfunction, only adequately trained personnel should modify any programmable machine.

Table of Contents

i. Preface i

Safety Instructions iii
Model Numbering System Diagram vii
Dimensions & Weights viii

1. Before Using This Product 1-1

Receiving Instructions 1-1
Appearance 1-1
Handling the Product 1-2
Carrying 1-3
Storage 1-3
Ratings Efficiency and Watts Loss 1-4

2. Installation Environment and Connection 2-1

Operating Environment 2-1
Installation Method 2-1
Connection 2-3
Basic Connection Diagrams 2-4
Connecting the Main Circuit and Ground Terminals 2-8
Connecting the Control Terminals 2-11
Terminal Configuration 2-15
Cable Size, Tightening Torque & Circuit Protection Rating 2-16
DC Link Reactor 2-17

3. Operation 3-1

Inspection and Preparation Before Operation 3-1
Operation Method 3-1
Trial Run 3-1

4. Keypad Panel 4-1

Appearance of Keypad Panel 4-1
Operation From the Keypad Panel 4-2
Normal Operation 4-2
Alarm Modes 4-2
Entering Data on the Keypad Panel 4-4
Operation Mode 4-4
Setting Digital Frequency 4-4
Switching to LED Digital Monitor 4-5
Program Menu Screen 4-5
Setting Function Data 4-5
Checking Function Data 4-7
Monitoring Operating Status 4-7
I/O Check 4-8
Maintenance Information 4-9
Load Rate Measurement 4-10
Alarm Information 4-11
Alarm History and Factors 4-12
Data Copy 4-13
Alarm Mode 4-15

5. Function Selection 5-1

Function Selection List 5-1
Alphabetical Function List 5-5
Function Explanation 5-7
F: Fundamental Functions 5-7
E: Extensions Terminal Functions 5-18
C: Control Functions of Frequency 5-28

6. Protective Operations 6-1

List of Protective Functions 6-1
Alarm Reset 6-2

7. Troubleshooting 7-1

Activation of Protective Function 7-1
Abnormal Motor Rotation 7-5

8. Maintenance and Inspection 8-1

Daily Inspections 8-1
Periodic Inspections 8-1
Main Circuit Measurements 8-4
Insulation Test 8-5
Replacement Parts 8-5

9. Warranty Parts and Service 9-1

In-Warranty Failure Checklist 9-2

10. Replacement Parts 10-1

11. Specifications 11-1

Standard Specifications 11-1
Common Specifications 11-5
Outline Dimensions 11-7
Keypad Mounting Hole 11-14

12. RS485 Modbus RTU Serial Communications 12-1

Transmission Specification 12-1
Connection 12-1
Serial Interface Configuration 12-1
Modbus RTU Functions 12-1
Drive Function Code Access 12-2
Command and Monitor Data Registers 12-2
Data Format Specification 12-4
Communication Errors 12-8

13. Options 13-1

Built-in Options 13-1

14. Electromagnetic Compatibility (EMC) 14-1

General 14-1
Recommended Installation Instructions 14-1

Safety Instructions

Read this manual carefully before installing, connecting (wiring), operating, servicing, or inspecting the drive.

Familiarize yourself with all safety features before using the drive.

In this manual, safety messages are classified as follows:

WARNING	Improper operation may result in serious personal injury or death.
CAUTION	Improper operation may result in slight to medium personal injury or property damage.

Situations more serious than those covered by CAUTION will depend on prevailing circumstances.
Always follow instructions.

Instructions on Use

WARNING

- This drive is designed to drive a 3-phase induction motor and is not suitable for a single-phase or other types of motors.
- This drive may not be used as a component of a life-support system or other medical device directly affecting the personal welfare of the user.
- This drive is manufactured under strict quality control standards. However, safety equipment must be installed or the failure of this device may result in personal injury, property damage, or risk an accident**.**

Instructions on Installation

WARNING

- Mount this drive on an incombustible material such as metal, otherwise a risk of fire may result.
- Do not place combustible or flammable material near this drive, as fire may result.

CAUTION

- Do not hold or carry this drive by its cover. Do not drop the converter, as injury may result.
- Ensure that the drive and heat sink surfaces are kept free of foreign matter (lint, paper dust, small chips of wood or metal, and dust), as fire or accident may result.
- Do not install or operate a damaged drive or a drive with missing parts, as electric shock or injury may occur.

Instructions on Wiring

WARNING

- Connect the drive to power via a line-protection molded-case circuit breaker or fuse, as fire may result. Always connect a ground wire, as electric shock or fire may result.
- A licensed specialist must perform all wiring work, as electric shock may result.
- Turn off the power before wiring, as electric shock may result.
- Wire the drive after mechanical installation is complete, as electric shock or injury may occur.

CAUTION

- Confirm that the number of phases and rated voltage of this product match those of the AC power supply, otherwise injury may result.
- Do not connect the AC power supply to the output terminals (U, V, and W), as injury may result.
- Do not directly connect a braking resistor to the DC terminals (P(+) and N(-)), as fire may result.
- Ensure that the noise generated by the drive, motor, or wiring does not adversely affect peripheral sensors and equipment, as an accident may result.

Instructions on Operation

WARNING

- Be sure to install the cover before turning on the power. Do not remove the cover while power to the drive is turned on. Electric shock may occur.
- Do not operate switches with wet hands, as electric shock may result. When the retry function is selected, the drive may restart automatically after tripping. Design the machine to ensure personal safety in the event of restart. Accident may result.
- When the torque limiting function is selected, operating conditions may differ from preset parameters (acceleration/deceleration time or speed). In this case, personal safety must be assured. An accident may result.
- The STOP key is only effective when a function setting has been established. Install an independent emergency switch to disable the STOP key on the keypad panel when an operation is selected via the external signal terminal, otherwise an accident may result.
- Operations can start up suddenly, after an alarm is reset, if there is a run signal present. Confirm that the run signal input is not present before resetting the alarm. Accident may result.
- Do not touch drive terminals when energized, even if the drive has stopped. Electric shock may result.

CAUTION

- Do not start or stop the drive using the main circuit power. Failure may result.
- Do not touch the heat sink or braking resistor because they become very hot. Burns may result.
- Since the drive can reach high speed operation easily, carefully check the performance of motor or machine before changing any speed settings. Injury may result.
- Do not use the drive braking function for mechanical holding. Injury may result.

Instructions on Maintenance, Inspection, and Replacement

WARNING

- Wait a minimum of five minutes (30HP or less) or ten minutes (40HP or more) after power has been turned off (open) before starting inspection. Also confirm that the charge lamp is off and that DC voltage between terminals P(+) and N(-) does not exceed 25V. Electrical shock may result.
- Only authorized personnel should perform maintenance, inspection, and replacement operations. Remove all metal jewelry such as watches and rings. Use insulated tools only. Electric shock or injury may result.

Instructions on Disposal

CAUTION

- Treat as industrial waste when disposing of drive. Injury may result.

Instructions for UL/cUL Requirements

CAUTION

- Hazard of electrical shock. Disconnect incoming power before working on this control.
- Dangerous voltage exist until charge light is off.
- Type1 - indoor use only.
- Tightening torque and wire size for field wiring terminal are marked adjacent to the terminal or on the wiring diagram.
- The drive shall be connected with Listed Class J Fuse or Circuit Breaker rated 600V as shown in the Table 2-3-5 (30 HP or less).
- In case of using auxiliary control-power input, connect it by referring to the basic connection diagram (2-3-1).
- Suitable for use on a circuit capable of delivering not more than 5000rms symmetrical amperes, for 230V (230V series), 480V (460V series) maximum up to 30HP; 42000rms symmetrical amperes 230V (230V series), 480V (460V series) maximum 40HP and above.
- Use 60/75 °C CU wire only.
- A Class 2 circuit wired with Class 1 wire (30HP or less). Use Class 1 wire only (40HP or more).
- Field wiring connection must be made by a UL Listed and CSA Certified closed-loop terminal connector sized for the wire gauge involved. Connector must be fixed using the crimp tool specified by the connector manufacturer.
- Solid state motor overload protection is provided in each model.

Other Instructions

WARNING

- Never modify the product. Electric shock or injury may result.

Conformity to Low Voltage Directive in Europe

CAUTION

- The contact capacity of alarm output for any fault (30A, B, C) and relay signal output (Y5A, Y5C) is 0.5A at 48V DC, 0.3A - 250 VAC
- The ground terminal (G) should be connected to ground. Use a crimp terminal to connect a cable to the main circuit terminal or drive ground terminal.
- Where a residual-current protective device (RCD) is used for protection in case of direct or indirect contact, only a type B device is allowed on the supply side of this electrical equipment. Otherwise, another protective measure shall be applied such as separation of the electrical equipment from the environment by double or reinforced insulation or isolation of the electrical equipment and supply system by the transformer.
- Use a single cable to connect the (G) drive ground terminal. Do not use two or more drive ground terminals.
- Use only a molded-case circuit breaker (MCCB) or magnetic contactor (MC) that conform to EN or IEC standards.
- Operate the drive under over-voltage Category III conditions and maintain Pollution Degree 2 or better as specified in IEC664. To maintain Pollution Degree 2 or better, install the drive in a control panel structure (level NEMA 3 or higher) which is free from water, oil, carbon, dust, etc.
- For the input-output wiring of the drive, use cable diameter and type as specified in Appendix C in EN60204.
- To ensure safety, install an optional AC reactor, DC reactor, or external braking resistor as follows:

  1) Install inside an IP4X cabinet or barrier if electrical parts are exposed.

  2) Install inside an IP2X cabinet or barrier if electrical parts are not exposed.
- In case of external cooling system, cover the drive rear side in order not to touch the main capacitor and braking resistor.

General Instructions

For clarity, some figures in this manual may show the drive with covers and safety screens removed for explanation purposes. Do not operate the device until all such covers and screens have been replaced.

GP10™ Model Number Configurator

Description	GP10	E1ST	3	4	010	A	1

Product Series

Enclosure

E1ST = NEMA 1
E2ST = NEMA 12
E4St = NEMA 4

Input Phases

3 = 3 Phase

Input Voltage

2 = 230V 50/60 Hz
4 = 460V 50/60 Hz

Horsepower

F50 = 1/2 Hp
010 = 10 Hp
100 = 100 Hp

Factory Use

Factory Use

GP10 Dimensions & Weights

GP10 Variable Torque/Constant Torque (VT/CT)

HP Rating (VT/CT)	NEMA Enclosure	Rated Output Current (A)	Overload (110%/150% 1min.)	GP10 Model No.	Part No.	Dimensions H x W x D (inches)	Weight (lbs)
230VAC, 3 phase, 50/60Hz Input, NEMA 1							
0.25/0.25	1	1.5/1.5	1.7/2.3	GP10E1ST32F25* *	GP102F25-1	10.24 x 4.33 x 5.12	4.8
0.5/0.5	1	3/3	3.3/4.5	GP10E1ST32F50* *	GP102F50-1	10.24 x 4.33 x 5.12	4.8
1/1	1	5/5	5.5/7.5	GP10E1ST32001* *	GP102001-1	10.24 x 4.33 x 5.71	5.5
2/2	1	8/8	8.8/12	GP10E1ST32002* *	GP102002-1	10.24 x 5.91 x 5.71	8.4
3/3	1	11/11	12/17	GP10E1ST32003* *	GP102003-1	10.24 x 5.91 x 5.71	8.4
5/5	1	17/17	19/26	GP10E1ST32005* *	GP102005-1	10.24 x 5.91 x 5.71	8.4
7.5/5	1	22/17	24/26	GP10E1ST32007* *	GP102007-1	10.24 x 8.66 x 7.68	12.6
10/7.5	1	29/25	32/38	GP10E1ST32010 * *	GP102010-1	10.24 x 8.66 x 7.68	12.6
15/10	1	42/33	46/50	GP10E1ST32015 * *	GP102015-1	10.24 x 8.66 x 7.68	12.6
20/15	1	55/45	61/69	GP10E1ST32020 * *	GP102020-1	15.75 x 9.84 x 7.68	22.0
25/20	1	68/59	75/89	GP10E1ST32025 * *	GP102025-1	15.75 x 9.84 x 7.68	22.0
30/25	1	80/74	88/110	GP10E1ST32030 * *	GP102030-1	15.75 x 9.84 x 7.68	23.1
40/30	1	115/87	127/131	GP10E1ST32040 * *	GP102040-1	29.7 x 13.5 x 10.0	70
50/40	1	145/115	160/173	GP10E1ST32050 * *	GP102050-1	29.7 x 13.5 x 10.0	70
60/50	1	180/145	198/218	GP10E1ST32060 * *	GP102060-1	33.1 x 14.9 x 10.6	86
75/60	1	215/180	215/180	GP10E1ST32075 * *	GP102075-1	38.0 x 14.9 x 10.6	106
100/75	1	283/215	283/215	GP10E1ST32100 * *	GP102100-1	38.0 x 14.9 x 10.6	110
125/100	1	346/283	346/283	GP10E1ST32125 * *	GP102125-1	41.3 x 21.0 x 11.2	172
150/125	1	415/346	415/346	GP10E1ST32150 * *	GP102150-1	50.4 x 26.9 x 14.2	282
230VAC, 3 phase, 50/60Hz Input, NEMA 4							
0.25/0.25	4	1.5/1.5	1.7/2.3	GP10E4ST32F25 * *	GP102F25-4	10.24 x 4.33 x 5.12	4.8
0.5/0.5	4	3/3	3.3/4.5	GP10E4ST32F50 * *	GP102F50-4	10.24 x 4.33 x 5.12	4.8
1/1	4	5/5	5.5/7.5	GP10E4ST32001 * *	GP102001-4	10.24 x 4.33 x 5.71	5.5
2/2	4	8/8	8.8/12	GP10E4ST32002 * *	GP102002-4	10.24 x 5.91 x 5.71	8.4
3/3	4	11/11	12/17	GP10E4ST32003 * *	GP102003-4	10.24 x 5.91 x 5.71	8.4
5/5	4	17/17	19/26	GP10E4ST32005 * *	GP102005-4	10.24 x 5.91 x 5.71	8.4
7.5/5	4	22/17	24/26	GP10E4ST32007 * *	GP102007-4	10.24 x 8.66 x 7.68	12.6
10/7.5	4	29/25	32/38	GP10E4ST32010 * *	GP102010-4	10.24 x 8.66 x 7.68	12.6
15/10	4	42/33	46/50	GP10E4ST32015 * *	GP102015-4	10.24 x 8.66 x 7.68	12.6
230VAC, 3 phase, 50/60Hz Input, NEMA 12							
20/15	12	55/45	61/69	GP10E2ST32020 * *	GP102020-2	15.75 x 9.84 x 7.68	22.0
25/20	12	68/59	75/89	GP10E2ST32025 * *	GP102025-2	15.75 x 9.84 x 7.68	22.0
30/25	12	80/74	88/110	GP10E2ST32030 * *	GP102030-2	15.75 x 9.84 x 7.68	23.1
230VAC, 3 phase, 50/60Hz Input, Open							
40/30	Open	115/87	127/131	GP10E9ST32040 * *	GP102040-9	21.7 x 13.4 x 10.0	64
50/40	Open	145/115	160/173	GP10E9ST32050 * *	GP102050-9	21.7 x 13.4 x 10.0	64
60/50	Open	180/145	198/218	GP10E9ST32060 * *	GP102060-9	24.2 x 14.8 x 10.6	79
75/60	Open	215/180	237/270	GP10E9ST32075 * *	GP102075-9	29.1 x 14.8 x 10.6	97
100/75	Open	283/215	311/323	GP10E9ST32100 * *	GP102100-9	29.1 x 14.8 x 10.6	101
125/100	Open	346/283	381/425	GP10E9ST32125 * *	GP102125-9	29.5 x 20.9 x 11.2	154
150/125	Open	415/346	457/519	GP10E9ST32150 * *	GP102150-9	34.6 x 26.8 x 14.2	253

* *Indicates factory use.

Note: Hp rating is shown for 230V and 460V nominal systems.

When applying at lower voltage, select the drive by rated current and not Hp rating.

GP10 Dimensions & Weights

GP10 Variable Torque/Constant Torque (VT/CT)

HP Rating (VT/CT)	NEMA Enclosure	Rated Output Current (A)	Overload (110%/150% 1min.)	GP10 Model No.	Part No.	Dimensions H x W x D (inches)	Weight (lbs)
230VAC, 3 phase, 50/60Hz Input, Open with NEMA 12 Heatsink							
40/30	Open	115/87	127/131	GP10E8ST32040 * *	GP102040-8	21.7 x 13.4 x 10.0	64
50/40	Open	145/115	160/173	GP10E8ST32050 * *	GP102050-8	21.7 x 13.4 x 10.0	64
60/50	Open	180/145	198/218	GP10E8ST32060 * *	GP102060-8	24.2 x 14.8 x 10.6	79
75/60	Open	215/180	237/270	GP10E8ST32075 * *	GP102075-8	29.1 x 14.8 x 10.6	97
100/75	Open	283/215	311/323	GP10E8ST32100 * *	GP102100-8	29.1 x 14.8 x 10.6	101
125/100	Open	346/283	381/425	GP10E8ST32125 * *	GP102125-8	29.5 x 20.9 x 11.2	154
150/125	Open	415/346	457/519	GP10E8ST32150 * *	GP102150-8	34.6 x 26.8 x 14.2	253
460VAC, 3 phase, 50/60Hz Input, NEMA 1							
0.5/0.5	1	1.5/1.5	1.7/2.3	GP10E1ST34F50 * *	GP104F50-1	10.24 x 4.33 x 5.12	4.8
1/1	1	2.5/2.5	2.8/3.8	GP10E1ST34001 * *	GP104001-1	10.24 x 4.33 x 5.71	5.5
2/2	1	3.7/3.7	4.1/5.6	GP10E1ST34002 * *	GP104002-1	10.24 x 5.91 x 5.71	8.4
3/3	1	5.5/5.5	6.1/8.3	GP10E1ST34003 * *	GP104003-1	10.24 x 5.91 x 5.71	8.4
5/5	1	9/9	9.9/14	GP10E1ST34005 * *	GP104005-1	10.24 x 5.91 x 5.71	8.4
7.5/5	1	12.5/9	14/14	GP10E1ST34007 * *	GP104007-1	10.24 x 8.66 x 7.68	13.4
10/7.5	1	16.5/13	18/20	GP10E1ST34010 * *	GP104010-1	10.24 x 8.66 x 7.68	13.4
15/10	1	23/18	25/27	GP10E1ST34015 * *	GP104015-1	10.24 x 8.66 x 7.68	13.4
20/15	1	30/24	33/36	GP10E1ST34020 * *	GP104020-1	15.75 x 9.84 x 7.68	22.0
25/20	1	37/30	41/45	GP10E1ST34025 * *	GP104025-1	15.75 x 9.84 x 7.68	22.0
30/25	1	44/39	48/59	GP10E1ST34030 * *	GP104030-1	15.75 x 9.84 x 7.68	23.1
40/30	1	60/45	66/68	GP10E1ST34040 * *	GP104040-1	29.7 x 13.5 x 10.0	70
50/40	1	75/60	83/90	GP10E1ST34050 * *	GP104050-1	29.7 x 13.5 x 10.0	70
60/50	1	91/75	100/113	GP10E1ST34060 * *	GP104060-1	29.7 x 14.9 x 10.6	82
75/60	1	112/91	123/137	GP10E1ST34075 * *	GP104075-1	34.6 x 14.9 x 10.6	95
100/75	1	150/112	165/168	GP10E1ST34100 * *	GP104100-1	34.6 x 14.9 x 10.6	97
125/100	1	176/150	194/225	GP10E1ST34125 * *	GP104125-1	38.0 x 14.9 x 10.6	115
150/125	1	210/176	231/264	GP10E1ST34150 * *	GP104150-1	38.0 x 21.0 x 12.4	174
200/150	1	253/210	278/315	GP10E1ST34200 * *	GP104200-1	38.0 x 21.0 x 12.4	174
250/200	1	304/253	334/380	GP10E1ST34250 * *	GP104250-1	53.1 x 21.0 x 14.2	245
300/250	1	377/304	415/456	GP10E1ST34300 * *	GP104300-1	53.1 x 21.0 x 14.2	245
350/300	1	415/377	457/566	GP10E1ST34350 * *	GP104350-1	55.1 x 26.9 x 14.2	337
400/350	1	485/415	534/623	GP10E1ST34400 * *	GP104400-1	55.1 x 26.9 x 14.2	337
450/350	1	520/415	572/623	GP10E1ST34450 * *	GP104450-1	55.1 x 26.9 x 14.2	337
500/400	1	650/520	715/780	GP10E1ST34500 * *	GP104500-1	57.1 x 26.8 x 17.7	562
600/450	1	740/585	814/878	GP10E1ST34600 * *	GP104600-1	57.1 x 26.8 x 17.7	562
700/500	1	840/650	924/975	GP10E1ST34700 * *	GP104700-1	57.1 x 34.6 x 17.7	804
800/600	1	960/740	1056/1110	GP10E1ST34800 * *	GP104800-1	57.1 x 34.6 x 17.7	804
460VAC, 3 phase, 50/60Hz Input, NEMA 4							
0.5/0.5	4	1.5/1.5	1.7/2.3	GP10E4ST34F50##	GP104F50-4	10.24 x 4.33 x 5.12	4.8
1/1	4	2.5/2.5	2.8/3.8	GP10E4ST34001##	GP104001-4	10.24 x 4.33 x 5.71	5.5
2/2	4	3.7/3.7	4.1/5.6	GP10E4ST34002##	GP104002-4	10.24 x 5.91 x 5.71	8.4
3/3	4	5.5/5.5	6.1/8.3	GP10E4ST34003##	GP104003-4	10.24 x 5.91 x 5.71	8.4
5/5	4	9/9	9.9/14	GP10E4ST34005##	GP104005-4	10.24 x 5.91 x 5.71	8.4
7.5/5	4	12.5/9	14/14	GP10E4ST34007##	GP104007-4	10.24 x 8.66 x 7.68	13.4
10/7.5	4	16.5/13	18/20	GP10E4ST34010##	GP104010-4	10.24 x 8.66 x 7.68	13.4
15/10	4	23/18	25/27	GP10E4ST34015##	GP104015-4	10.24 x 8.66 x 7.68	13.4

**Indicates factory use.

Note: Hp rating is shown for 230V and 460V nominal systems.

When applying at lower voltage, select the drive by rated current and not Hp rating.

GP10 Dimensions & Weights

GP10 Variable Torque/Constant Torque (VT/CT)

HP Rating (VT/CT)	NEMA Enclosure	Rated Output Current (A)	Overload (110%/150% 1min.)	GP10 Model No.	Part No.	Dimensions H x W x D (inches)	Weight (lbs)
460VAC, 3 phase, 50/60Hz Input, NEMA 12							
20/15	12	30/24	33/36	GP10E2ST34020 * *	GP104020-2	15.75 x 9.84 x 7.68	22.0
25/20	12	37/30	41/45	GP10E2ST34025 * *	GP104025-2	15.75 x 9.84 x 7.68	22.0
30/25	12	44/39	48/59	GP10E2ST34030 * *	GP104030-2	15.75 x 9.84 x 7.68	23.1
460VAC, 3 phase, 50/60Hz Input, Open							
40/30	Open	60/45	66/68	GP10E9ST34040 * *	GP104040-9	21.7 x 13.4 x 10.0	64
50/40	Open	75/60	83/90	GP10E9ST34050 * *	GP104050-9	21.7 x 13.4 x 10.0	64
60/50	Open	91/75	100/113	GP10E9ST34060 * *	GP104060-9	21.7 x 14.8 x 10.6	75
75/60	Open	112/91	123/137	GP10E9ST34075 * *	GP104075-9	26.6 x 14.8 x 10.6	86
100/75	Open	150/112	165/168	GP10E9ST34100 * *	GP104100-9	26.6 x 14.8 x 10.6	88
125/100	Open	176/150	194/225	GP10E9ST34125 * *	GP104125-9	29.1 x 14.8 x 10.6	106
150/125	Open	210/176	231/264	GP10E9ST34150 * *	GP104150-9	29.1 x 20.9 x 12.4	154
200/150	Open	253/210	278/315	GP10E9ST34200 * *	GP104200-9	29.1 x 20.9 x 12.4	154
250/200	Open	304/253	334/380	GP10E9ST34250 * *	GP104250-9	39.4 x 20.9 x 14.2	220
300/250	Open	377/304	415/456	GP10E9ST34300 * *	GP104300-9	39.4 x 20.9 x 14.2	220
350/300	Open	415/377	457/566	GP10E9ST34350 * *	GP104350-9	39.4 x 26.8 x 14.2	308
400/350	Open	485/415	534/623	GP10E9ST34400 * *	GP104400-9	39.4 x 26.8 x 14.2	308
450/350	Open	520/415	572/623	GP10E9ST34450 * *	GP104450-9	39.4 x 26.8 x 14.2	308
500/400	Open	650/520	715/780	GP10E9ST34500 * *	GP104500-9	55.1 x 26.8 x 17.7	551
600/450	Open	740/585	814/878	GP10E9ST34600 * *	GP104600-9	55.1 x 26.8 x 17.7	551
700/500	Open	840/650	924/975	GP10E9ST34700 * *	GP104700-9	55.1 x 35.6 x 17.7	793
800/600	Open	960/740	1056/1110	GP10E9ST34800 * *	GP104800-9	55.1 x 35.6 x 17.7	793
460VAC, 3 phase, 50/60Hz Input, Open with NEMA 12 Heatsink							
40/30	Open	60/45	66/68	GP10E8ST34040 * *	GP104040-8	21.7 x 13.4 x 10.0	64
50/40	Open	75/60	83/90	GP10E8ST34050 * *	GP104050-8	21.7 x 13.4 x 10.0	64
60/50	Open	91/75	100/113	GP10E8ST34060 * *	GP104060-8	21.7 x 14.8 x 10.6	75
75/60	Open	112/91	123/137	GP10E8ST34075 * *	GP104075-8	26.6 x 14.8 x 10.6	86
100/75	Open	150/112	165/168	GP10E8ST34100 * *	GP104100-8	26.6 x 14.8 x 10.6	88
125/100	Open	176/150	194/225	GP10E8ST34125 * *	GP104125-8	29.1 x 14.8 x 10.6	106
150/125	Open	210/176	231/264	GP10E8ST34150 * *	GP104150-8	29.1 x 20.9 x 12.4	154
200/150	Open	253/210	278/315	GP10E8ST34200 * *	GP104200-8	29.1 x 20.9 x 12.4	154
200/150	Open	304/253	334/380	GP10E8ST34250 * *	GP104250-8	39.4 x 20.9 x 14.2	220
250/200	Open	377/304	415/456	GP10E8ST34300 * *	GP104300-8	39.4 x 20.9 x 14.2	220
300/250	Open	415/377	457/566	GP10E8ST34350 * *	GP104350-8	39.4 x 26.8 x 14.2	308
350/300	Open	485/415	534/623	GP10E8ST34400 * *	GP104400-8	39.4 x 26.8 x 14.2	308
400/350	Open	520/415	572/623	GP10E8ST34450 * *	GP104450-8	39.4 x 26.8 x 14.2	308
500/400	Open	650/520	715/780	GP10E8ST34500 * *	GP104500-8	55.1 x 26.8 x 17.7	551
600/450	Open	740/585	814/878	GP10E8ST34600 * *	GP104600-8	55.1 x 26.8 x 17.7	551
700/500	Open	840/650	924/975	GP10E8ST34700 * *	GP104700-8	55.1 x 35.6 x 17.7	793
800/600	Open	960/740	1056/1110	GP10E8ST34800 * *	GP104800-8	55.1 x 35.6 x 17.7	793

** Indicates factory use.

Note: Hp rating is shown for 230V and 460V nominal systems.

When applying at lower voltage, select the drive by rated current and not Hp rating.

1. Before Using This Product

1.1 Receiving Instructions

Unpack and check the product as explained below.

If you have any questions about the product, contact Saftronics or your local distributor.

1. Check the ratings nameplate to confirm that the delivered product is the one that was ordered.

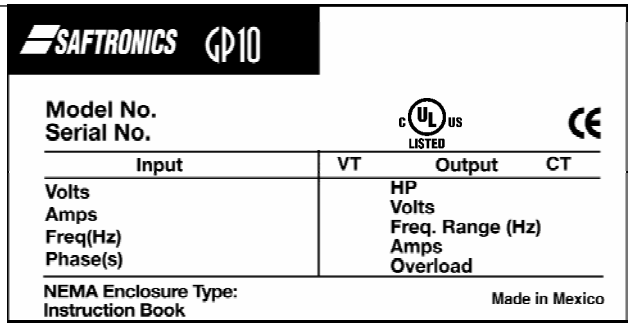

Ratings Nameplate

SER. No. : 0 1 1 0 - 0 0 0 1 2 M 0 0 01

- Production lot serial number
- Production week: Fiscal week (01 to 53)
- Production year: Last two digits of year (00 = 2000)

2. Check for damaged and/or missing parts upon delivery.
3. In addition to the drive unit and this manual, the package contains rubber bushings (for products with 30 Hp or less) and a terminating resistor (1/2 W, 120 ohm). The terminating resistors for products with 30 Hp or less are packaged separately. The terminating resistors for products with 40HP or more are installed internal to the drive unit. To connect the internal terminating resistor, place hardware jumper J2 to the "ON" position. This terminating resistor is required for RS485 RTU communication.
4. On drives rated 100 Hp and larger, a separately mounted DC Link Reactor is provided. The reactor should be checked for proper rating before installation.

1.2 Appearance

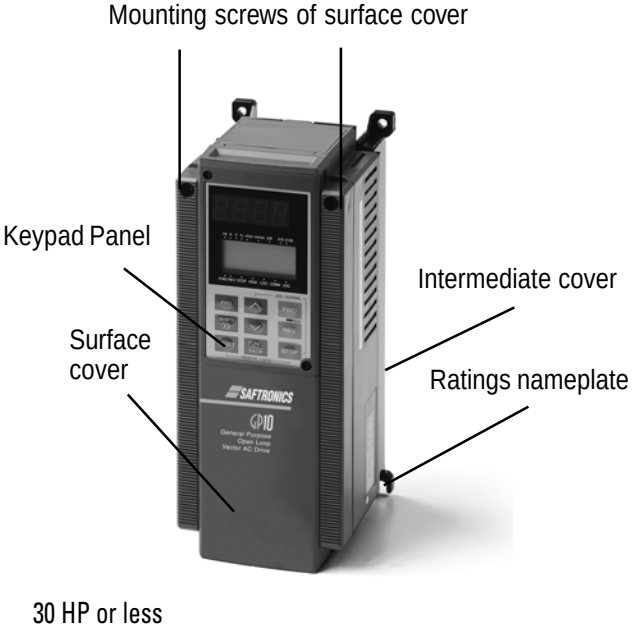

30 HP or less

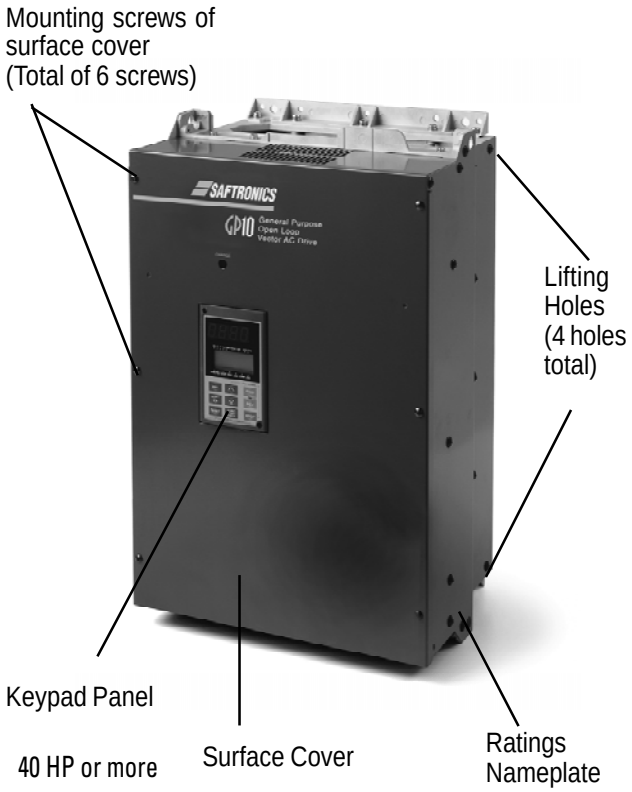

40 HP or more

1.3 Handling the Product

(1) Removing the Cover

For drives 30HP or less, loosen the cover mounting screws, then remove the cover by pulling from the top (see Figure 1.3.1).

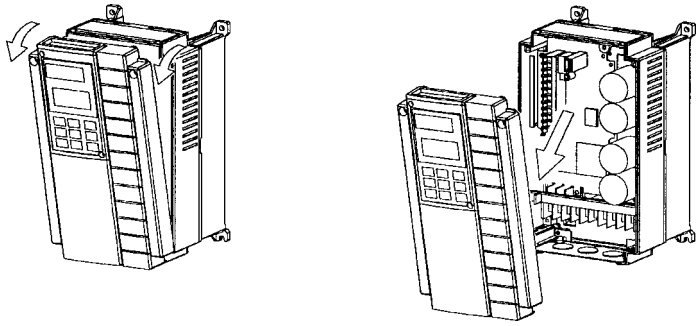

Fig.1-3-1 Removing the Cover (for drives of 30HP or less)

For drives 40HP or more, first remove the six cover mounting screws, then remove the cover.

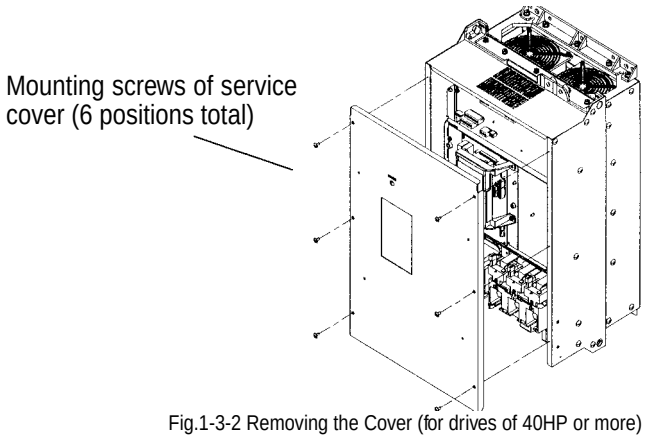

Fig.1-3-2 Removing the Cover (for drives of 40HP or more)

(2) Removing the Keypad Panel

After removing the cover as explained in (1), loosen the keypad panel mounting screws and remove as shown in Figure 1.3.3 for drives 30HP or less.

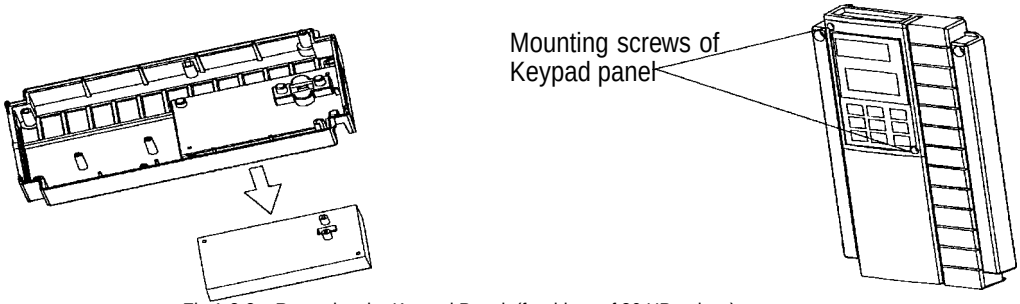

Fig.1-3-3 Removing the Keypad Panel (for drives of 30 HP or less)

For drives 40HP or more, loosen the keypad panel mounting screws and remove, using the finger holds on the keypad panel case.

Fig.1-3-4 Removing the Keypad Panel (for drives 40HP or more)

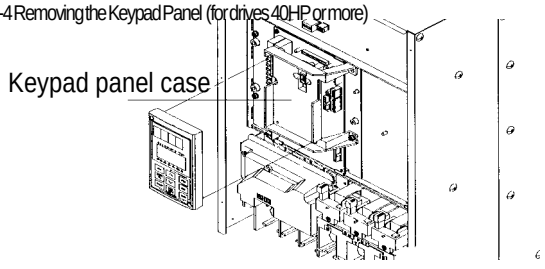

1.4 Carrying

Carry the product by the main unit. Do not carry the product by its cover or parts other than the main unit. Use a crane or hoist to carry a product equipped with hanging holes.

1.5 Storage

Temporary Storage

Temporary storage of this product must meet the conditions listed in Table 1-5-1.

Table 1-5-1 Storage Environment

Item		Specifications
Ambient Temperature	-10° to +50°C (+14° to +122°F)	Condensation or freezing, as a result of sudden temperature changes, must not occur.
Storage Temperature	-25° to +65°C[1] (-4° to +149°F)	
Relative Humidity	5 to 95%[2]	
Atmosphere	The standard product must not be exposed to dust, direct sunlight, corrosive gas, flammable gas, oil mist, vapor, water drops, or vibration. The salt content in the atmosphere should be minimized.	

Note 1: The storage temperature applies only to short periods of time, such as during transport. Refer to comments on extended storage guidelines.

Note 2: Since a large change in temperature within this humidity range may result in condensation or freezing, do not store where such temperature changes may occur.

1. Do not place this product directly on the floor.
2. To store the product in an extreme environment, pack in vinyl sheeting, etc.
3. If the product is stored in a high-humidity environment, insert a drying agent (e.g., silica gel) and pack the product in vinyl sheeting.

Long-term Storage

If the product is to be stored for an extended period of time after purchase, the method of storage depends primarily on the storage location.

The general long-term storage method is as follows:

1. The above conditions for temporary storage must be satisfied.If the storage period exceeds three months, the upper limit of ambient temperature must be reduced to 30°C (86°F) to prevent the deterioration of the electrolytic capacitors.
2. Pack the product thoroughly to eliminate exposure to moisture and include a drying agent to ensure a relative humidity of about 70% or less.
3. Do not leave the product mounted in a control panel and exposed to the elements like moisture or dust (particularly on a construction site). In this case, remove the product and store in a suitable environment.
4. Electrolytic capacitors will deteriorate if not provided with power for an extended period of time. Do not store electrolytic capacitors for one year or longer without providing power.

1.6 GP10 Drive Ratings Efficiency and Watts Loss

HP Rating	Rated Output Current (A)	Rated Output Power (KVA)	Efficiency at 2KHz (%)	Efficiency at 15KHz (%)	Watts Loss at 2KHz (W)	Watts Loss at 15KHz (W)	Internal DB (W)
230VAC							
0.25	1.5	0.59	92.0	90.5	25	30	N/A
0.5	3	1.1	93.5	91.7	35	45	N/A
1	5	1.9	94.9	94.0	50	60	N/A
2	8	3.1	95.7	94.1	80	110	N/A
3	11	4.3	95.9	94.9	110	140	N/A
5	17	6.7	96.2	95.4	170	210	N/A
7.5	22	8.7	96.2	95.2	210	280	N/A
10	29	11	96.5	95.3	290	370	N/A
15	42	16	96.4	95.2	410	550	N/A
20	55	21	96.9	95.9	500	670	N/A
25	67	26	96.8	95.8	630	840	N/A
30	78	31	96.5	95.5	770	1030	N/A
			2KHz (%)	10KHz (%)	2KHz (W)	10KHz (W)	
40	115	45	97.2	96.8	950	1100	N/A
50	145	57	97.0	96.7	1250	1400	N/A
60	180	71	97.1	96.6	1500	1750	N/A
75	215	85	97.3	96.6	1700	1950	N/A
100	283	112	97.4	97.0	2200	2500	N/A
			2KHz (%)	6KHz (%)	2KHz (W)	6KHz (W)	
125	346	137	97.4	97.2	2650	2800	N/A
150	415	165	97.4	97.3	3200	3350	N/A
460VAC							
0.5	1.5	1.1	93.5	89.3	35	60	N/A
1	2.5	1.9	95.4	91.7	45	85	N/A
2	3.7	2.9	96.7	94.1	60	110	N/A
3	5.5	4.3	97.0	94.5	80	150	N/A
5	9	7.1	97.1	95.0	130	230	N/A
7.5	12.5	9.9	97.3	95.3	160	290	N/A
10	16.5	13.1	97.3	95.4	210	370	N/A
15	23	18.3	97.6	95.9	300	520	N/A
20	30	23.9	97.9	96.5	360	610	N/A
25	37	29.4	97.8	96.4	460	770	N/A
30	44	35	97.8	96.4	530	870	N/A
			2KHz (%)	10KHz (%)	2KHz (W)	10KHz (W)	
40	60	47	97.8	96.9	750	1050	N/A
50	75	59	97.7	96.9	950	1300	N/A
60	91	72	97.8	97.0	1100	1550	N/A
75	112	89	97.8	97.0	1350	1900	N/A
100	150	119	97.8	97.1	1800	2450	N/A
			2KHz (%)	6KHz (%)	2KHz (W)	6KHz (W)	
125	176	140	98.1	97.8	1850	2200	N/A
150	210	167	98.0	97.8	2400	2750	N/A
200	253	202	98.0	97.7	2900	3350	N/A
250	304	242	98.1	97.8	3250	3800	N/A
300	377	300	98.1	97.8	4250	4900	N/A
350	415	330	98.2	97.9	4350	5100	N/A
400	485	386	98.1	97.8	5100	5900	N/A
450	520	414	98.1	97.8	5700	6650	N/A
500	650	518	98.2	97.9	6900	8050	N/A
600	740	590	98.1	97.8	8050	9350	N/A
700	840	669	98.2	97.9	8900	10400	N/A
800	960	765	98.1	97.8	10300	12100	N/A

2. Installation Environment and Connection

2.1 Operating Environment

Install this product in a location that meets the conditions listed in Table 2-1-1.

Table 2-1-1 Operating Environment

Item	Specifications
Location	Indoors
Ambient Temperature	-10° to +50°C (+14° to +122°F) - for products of 30 HP or less, the ventilating covers must be removed if ambient temperature exceeds +40°C (104°F), NEMA Type 4 & 12 Unit -10° to +40°C (+14° to +104°F)
Relative Humidity	5 to 95% (No condensation).
Atmosphere	The product must not be exposed to dust, direct sunlight, corrosive gas, oil mist, vapor, or water. There must be a minimum salt content in the atmosphere. Do not store where condensation may occur as a result of sudden changes in temperature.
Altitude	1000 m (3300 feet) or lower - For altitude above 1000 m (3300 feet), see Table 2-1-2.
Vibration	3mm peak from 2 to 9Hz, 9.8m/s2 from 9 to 20Hz, 2m/s2 from 20-55Hz, 1m/s2 from 55 to 200Hzs.

2.2 Installation Method

1. Securely fasten the product in an upright position on a solid structure with the logo facing the front. Do not turn the product upside down or install in a horizontal position. Fig. 2-2-1
2. Since heat is generated during drive operation, the spaces shown in Fig. 2-2-1 are required to ensure sufficient cooling. Do not install the product beneath a device sensitive to heat as heat radiates upward.
3. The heat sink may reach a temperature of 90°C (+194°F) during drive operation. Ensure that the material surrounding the product can withstand this temperature.

WARNING

Install this product on nonflammable material such as metal.

4. When installing this product in a control panel, consider ventilation to prevent the drive's ambient temperature from exceeding the specified value. Do not install the product in an area from which heat cannot be sufficiently released.
5. If two or more drives must be installed in the same device or control panel, arrange the units horizontally to minimize the effect of heat. If two or more drives must be installed vertically, place an insulated plate between the drives to minimize the effect of heat.
6. When shipped from the factory, drives provide internal cooling inside the panel. A drive of 30HP or less can be converted to external cooling simply by adding an optional mounting adapter.

CAUTION

Ensure that the drive and heat sink surfaces are kept free of foreign matter such as lint, paper dust, small chips of wood or metal, and dust. **Fire or accident may result.**

Table 2-1-2 Output current reduction rate based on altitude

Altitude	Output current reduction rate
3300 feet (1000m or lower)	1
3300-4950 feet (1000-1500m)	0.97
4950-6600 feet (1500-2000m)	0.95
6600-8250 feet (2000-2500m)	0.91
8250-9900 feet (2500-3000m)	0.88

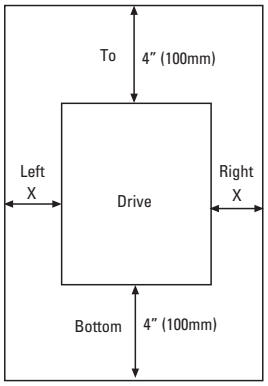

Fig. 2-2-1 30 HP or less: Gap X can be 0. (side-by-side installation) 40HP or more: Gap X >= 2.0" (50mm)

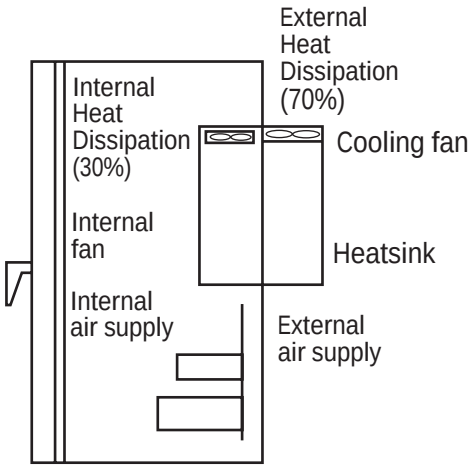

Fig. 2-2-2 Through Panel Mount

A drive of 40HP or more can be converted to external cooling simply by moving the upper and lower mounting brackets as shown in Fig. 2-2-3. Remove the M6 bracket screws, move the brackets, then secure the brackets using the M5 case mounting screws. (The bracket screws are no longer required after changing the bracket mounting position.)

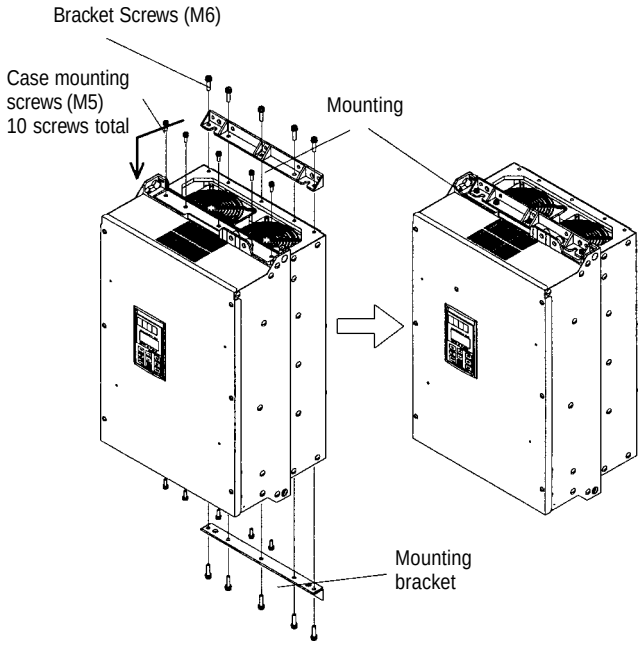

Fig. 2-2-3

In an external cooling system, a heat sink radiating about 70% of total drive heat (total loss) can be placed outside the device or control panel, as shown in Fig. 2-2-2.

7. For drives of 30HP or less, remove the ventilating covers if ambient temperature exceeds +40°C (104°F).

1. Removing the Ventilating Covers

One ventilating cover is mounted on top of the drive and two or three are mounted at the bottom. Remove the main cover and then remove ventilating covers by popping out the cover inserts as shown in Fig. 2-2-4.

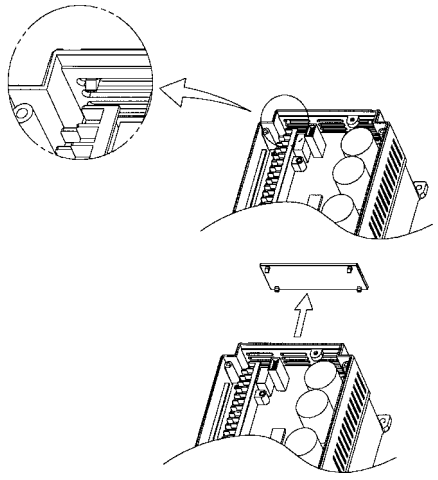

Fig. 2-2-4 Removing the ventilating cover

Installation of Open Type with NEMA 12 Heatsink Drive (40 Hp and above)

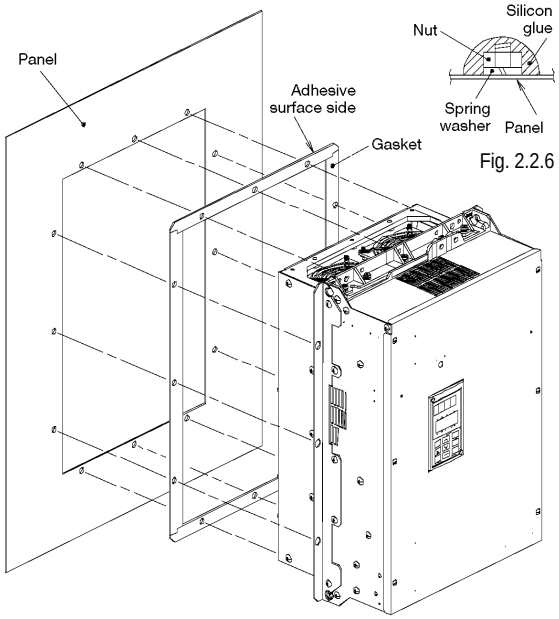

Fig. 2.2.6

Fig.2.2.5

1. Remove adhesive protection strip from gasket and then mount gasket to panel/enclosure, carefully aligning cutout and mounting holes.
2. Install the drive unit and tighten the mounting bolt and nut. (Tightening torque: 119 lbs-inch [M8], 425 lbs-inch [M12]). Mounting hardware to be supplied by customer. (refer to figure 2.2.5)
3. After proper torque has been applied to all mounting hardware, seal the outside end of the hardware with silicon glue. Silicon glue to be supplied by the customer. (Refer to Fig. 2.2.6)

2.3 Connection

Remove the main cover before connecting the terminal blocks as follows.

2-3-1 Basic Connection

1. Always connect power to the L1/R, L2/S, and L3/T main circuit power terminals on the drive. Connecting power to another terminal will damage the drive. Check that the input voltage is within the maximum allowable voltage marked on the nameplate, etc.
2. Always wire the ground terminal to ground to prevent problems such as fire or electric shock and to minimize noise.
3. Use a reliable crimp terminal for connection between a power terminal and a power wire.
4. After terminating the wiring connection, confirm the following:
   a. Confirm that the connection is correct.
   b. Confirm that all necessary connections have been made.
   c. Confirm that there is no short-circuit or ground fault between the terminals and wire.
5. Connection modification after power-on.
   The smoothing capacitor in the direct current portion of the main circuit cannot be discharged immediately after the power is turned off. To insure safety, use a multimeter to check that the direct current (DC) voltage is lowered to the safety range (25V DC or less) after the charge lamp goes off. Also, confirm that the voltage is zero before short-circuiting. The residual voltage (electric charge) may cause sparks.

> **WARNING**
>
> Always connect a ground wire. Electric shock or fire may result. Ensure that a trained specialist performs all wiring. Confirm that the power is turned off (open) before beginning any wiring operations. Electrical shock may result.

2.3.1 Basic Connection Diagram (Sink Logic)

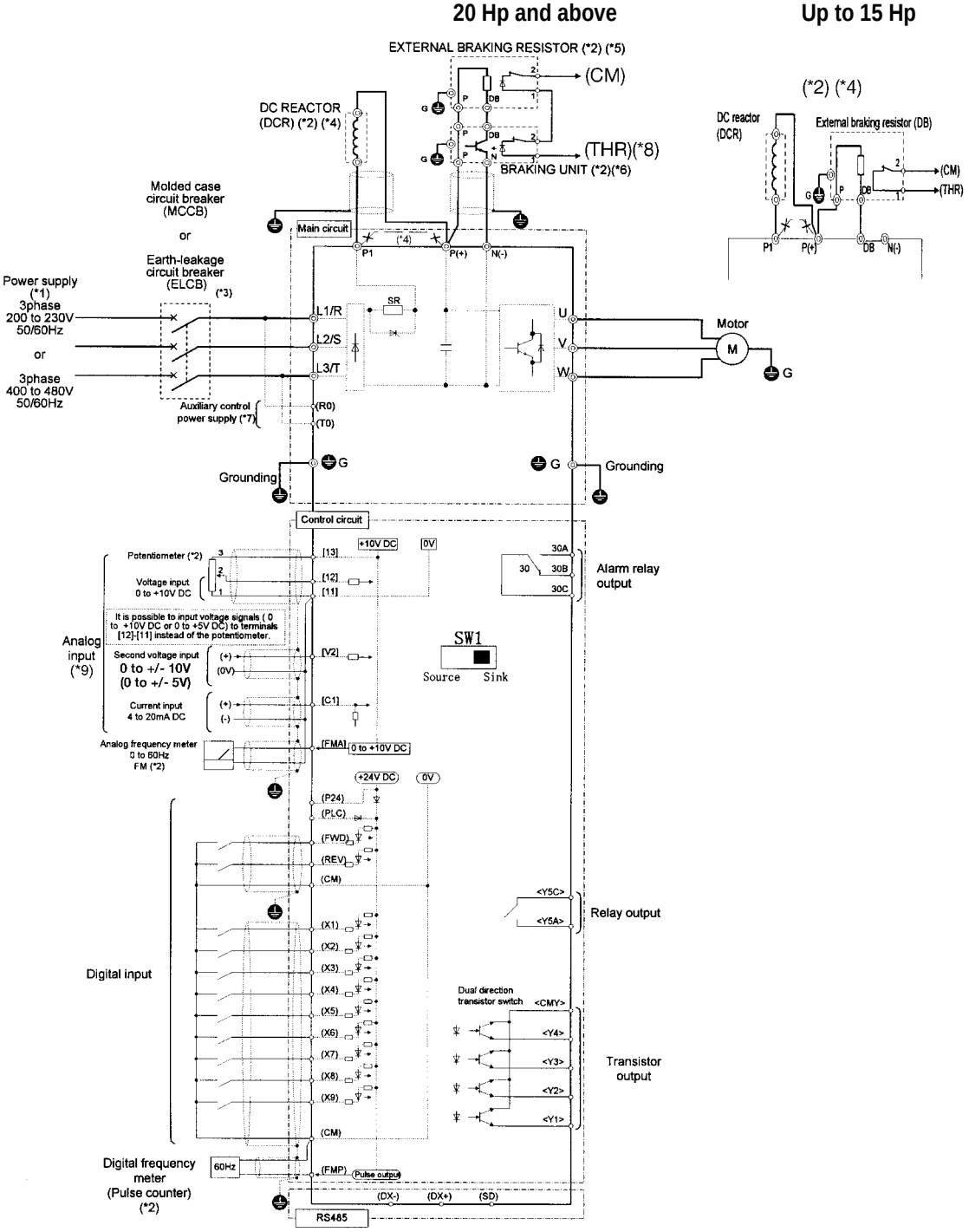

Note: The control circuit common terminals [11], (CM) and <CMY> are isolated

(*1) Use a drive with rated voltage matching the power supply voltage.
(*2) Use as required.
(*3) Use this peripheral device when necessary.
(*4) Remove the jumper wire between P1 and P(+) before connecting a DC REACTOR.
(*5) Be sure to use the braking unit (option) when connecting the external braking resistor (option)
(*6) Connect the braking unit to P(+) ans N(-). The auxiliary terminals [1] and [2] have polarity.
Connect them as shown in the figure above.
(*7) The drive can be operated without connecting the auxiliary control power supply.
(*8) Terminal (X1) to (X9) can be set to 9 (THR) - Braking unit thermal trip input.
(*9) If using V2 or C1, as a reference signal, they must be used exclusively.
(*10) It is possible to input voltage signals (0 to +10 VDC or 0 to +5 VDC) to terminals [12] [11] instead of the potentiometer.

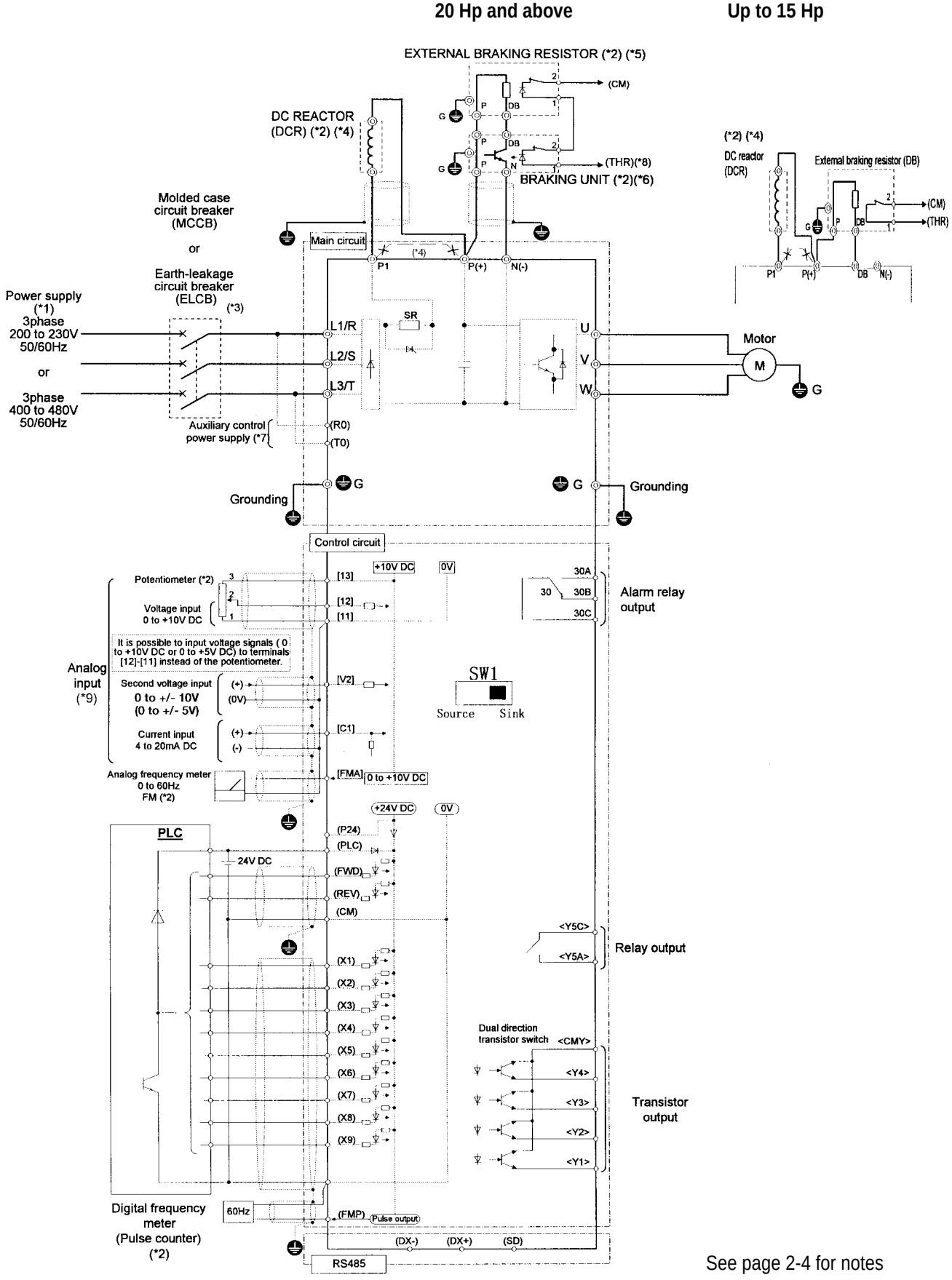

See page 2-4 for notes

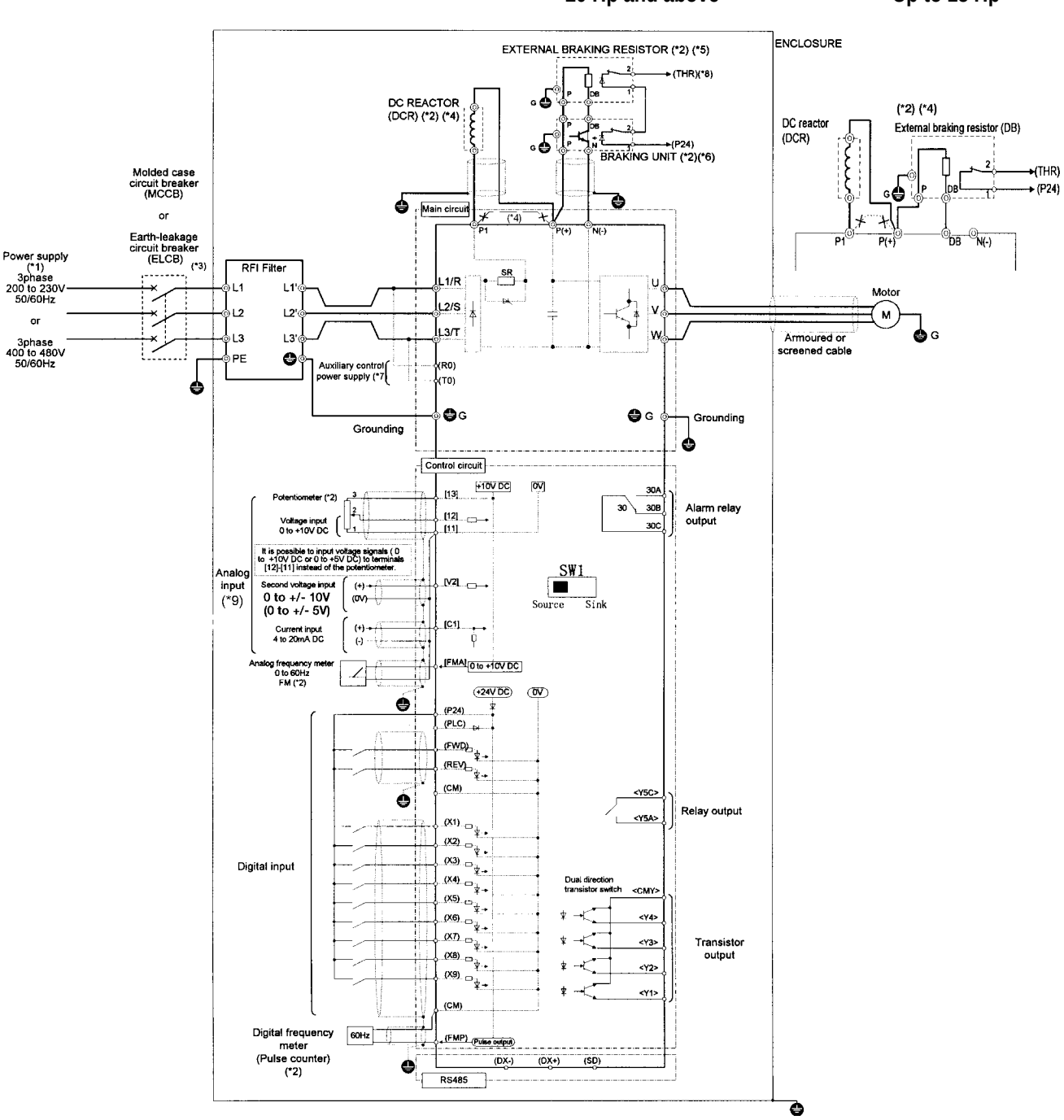

Note: The control circuit common terminals [11], (CM) and <CMY> are isolated

(*1) Use a drive with rated voltage matching the power supply voltage.
(*2) Use as required.
(*3) Use this peripheral device when necessary.
(*4) Remove the jumper wire between P1 and P(+) before connecting a DC REACTOR.
(*5) Be sure to use the braking unit (option) when connecting the external braking resistor (option).
(*6) Connect the braking unit to P(+) ans N(-). The auxiliary terminals [1] and [2] have polarity.
Connect them as shown in the figure above.
(*7) The drive can be operated without connecting the auxiliary control power supply.
(*8) Terminal (X1) to (X9) can be set to 9 (THR) - Braking unit thermal trip input.
(*9) If using V2 or C1, as a reference signal, they must be used exclusively.
(*10) It is possible to input voltage signals (0 to +10 VDC or 0 to +5 VDC) to terminals [12] [11] instead of the potentiometer.

20 Hp and above **Up to 15 Hp**

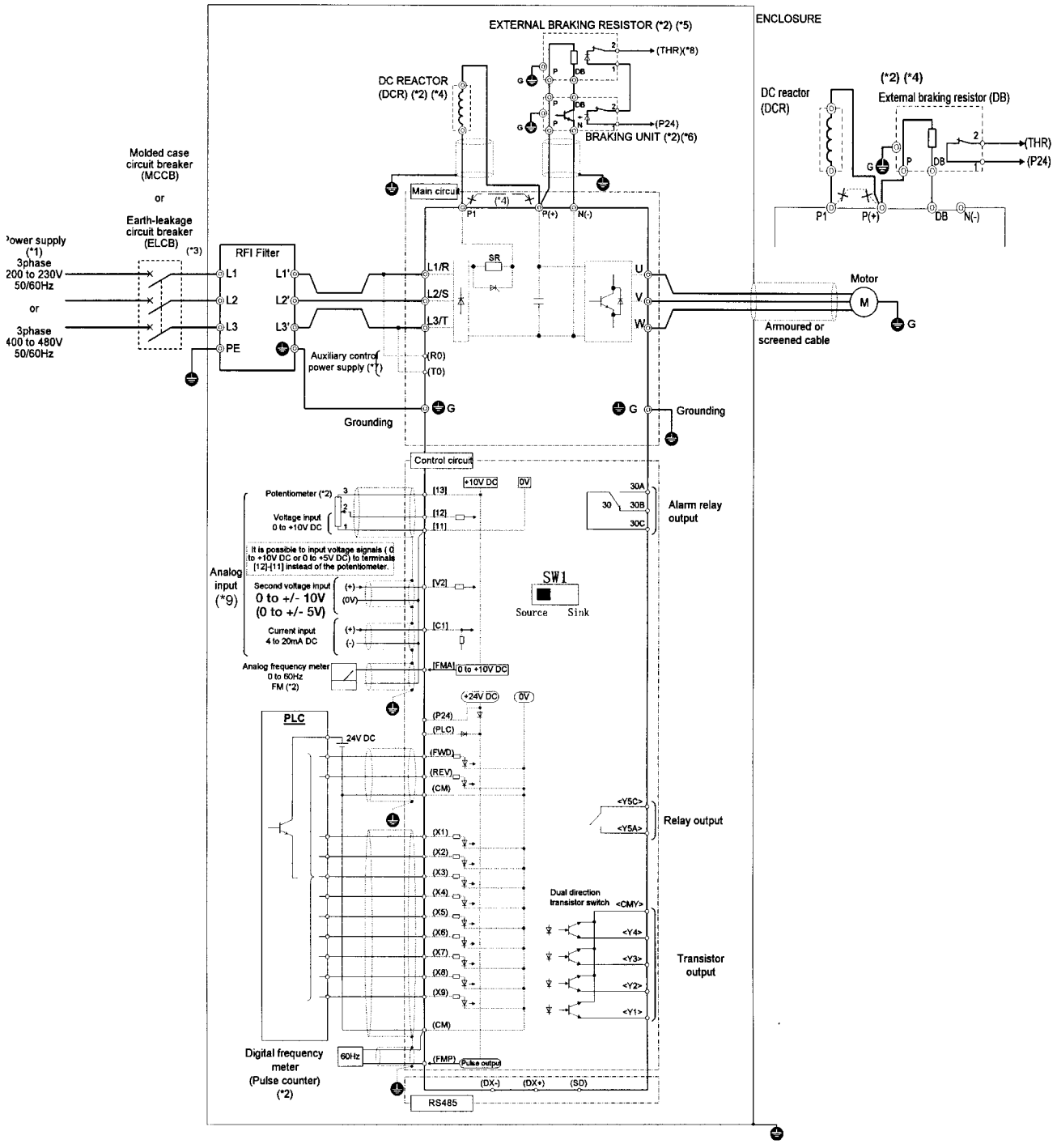

See page 2-6 for notes

2.3.2 Connecting the Main Circuit and Ground Terminals

Table 2.3.1 Functions of main circuit terminals and ground termnals

Symbol	Terminal Name	Description
L1/R,L2/S,L3/T	Main circuit power terminals	Connects a 3-phase power supply
U,V,W	Inverter output terminals	Connects a 3-phase motor
R0,T0	Input terminals for auxiliary control power	Connects a backup AC power supply to the control circuit (not supported for drives of 1 Hp or less)
P1,P(+)	DC reactor terminals	Connects the optional power correcting DC reactor
P(+),DB	Terminals for external braking resistor	Connects the optional external braking resistor (for drives of 15 Hp or less)
P(+),N(-)	Terminals for DC link circuit	Supplies DC link circuit voltage to the external braking unit (option) or power regeneration unit (option).
G	Ground terminal	Connects the drive chassis (case) to ground.

(1) Main circuit power terminals (L1/R, L2/S, L3/T)

1. Connect these terminals to the power supply via a molded-case circuit breaker or ground-leakage circuit breaker for circuit protection. Phase-sequence matching is unnecessary.
2. To insure safety, a magnetic contactor should be used to disconnect the drive from the power supply when the drive protective function activates.
3. Use control circuit terminal FWD/REV or the RUN/STOP key on the keypad panel to start or stop the drive. The main circuit power should be used to start or stop the drive only if absolutely necessary and then should not be used more than once every hour.
4. If you need to connect these terminals to a single-phase power supply, please contact the factory.

(2) Drive output terminals (U, V, W)

1. Connect these terminals to a 3-phase motor in the correct phase sequence. If the direction of motor rotation is incorrect, exchange any two of the U, V, and W phases.
2. Do not connect a power factor correction capacitor or surge absorber to the drive output.
3. If the cable from the drive to the motor is very long, a high-frequency current may be generated by stray capacitance between the cables and result in an overcurrent trip of the drive, an increase in leakage current, or a reduction in current indication precision.

When a motor is driven by a PWM-type drive, the motor terminals may be subject to surge voltage generated by drive element switching. If the motor cable (with 460V series motors, in particular) is particularly long, surge voltage will deteriorate motor insulation. To prevent this, use the following guidelines:

Drives 7.5 HP and larger			
Motor Insulation Level	1000V	1300V	1600V
460 VAC Input Voltage	66 ft (20 m)	328 ft (100 m)	1312 ft (400 m) *
230 VAC Input Voltage	1312 ft (400 m) *	1312 ft (400 m) *	1312 ft (400 m) *

Drives 5 HP and smaller			
Motor Insulation Level	1000V	1300V	1600V
460 VAC Input Voltage	66 ft (20 m)	165 ft (50 m) *	165 ft (50 m) *
230 VAC Input Voltage	328 ft (100 m) *	328 ft (100 m) *	328 ft (100 m) *
* For this case the cable length is determined by secondary effects and not voltage spiking.			

Note: When a motor protective thermal O/L relay is inserted between the drive and the motor, the thermal O/L relay may malfunction (particularly in the 460V series), even when the cable length is 165 feet (50m) or less. To correct, insert a filter or reduce the carrier frequency. (Use function code “F26 Motor sound”.)

(3) Input terminals for auxiliary control power (R0 and T0)

The drive operates even if power is not provided to these terminals. If a protective circuit operates, and the magnetic contactor on the drive's power is opened (off), the inverter control circuit power, the alarm output (30A, B, and C), and the keypad panel display goes off. To prevent this, the main circuit AC power must also be supplied as auxiliary control power to the auxiliary control power input terminals (R0 and T0).

1. To ensure effective noise reduction when using a radio noise filter, the output power from the filter must go to the auxiliary control power input terminals. If these terminals are connected to the input side of the filter, the noise reduction effect deteriorates.

(4) DC reactor terminals (P1 and P(+))

1. Before connecting a power factor correcting DC reactor (optional) to these terminals, remove the factory-installed jumper.
2. If a DC reactor is not used, do not remove the jumper.

Note: For drives of 100 Hp or more, the DC reactor is provided as a separate standard component and should always be connected to the terminals. DC reactor is provided as open type, enclosure to be provided by other.

> CAUTION
>
> A DC reactor does not come with drives rated less than 100 Hp, however, use a DC reactor or AC reactor under the following conditions otherwise the drive may be damaged or malfunction.

1) Used when the capacity of the power supply transformer exceeds 500k VA and exceeds the rated capacity of the drive tenfold.
2. Used when a thyrister converter is connected as a common load on the same transformer.
3. Used to prevent a drive OV trip from occuring when the power factor capacitor in the power line is switched on and off.
4. Used when the voltage imbalance exceds 3%.

$$\text{Imbalance rate between phase [\%]} = \frac{\text{(Max. voltage [V] - Min. voltage [V]}}{\text{3-phase average voltage [V]}} \times 100\%$$

(5) Terminals for external braking resistor (P(+) and DB) (15 Hp or less)

The GP10 drive 15 Hp or less, does not contain a braking resistor. To improve braking performance, an external braking resistor must be installed.

1. Connect terminals P(+) and DB on the external braking resistor to terminals P(+) and DB on the drive.
2. The wiring length (twisted pair cables, etc.) should not exceed 16.5 feet (5m).

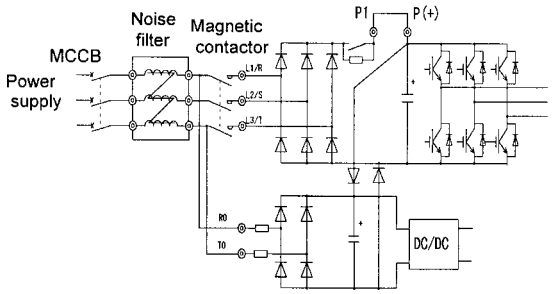

Fig. 2-3-2 Connection the auxiliary control-power input terminals

(6) Terminals for DC link circuit (P(+) and N(-))

The GP10 drive of 20 Hp or more, does not contain a drive circuit for the braking resistor. To improve braking performance, an external braking unit (option) and an external braking resistor (option) must be installed.

1. Connect terminals P(+) and N(-) on the braking unit to terminals P(+) and N(-) on the drive. The wiring length (twisted pair cables, etc.) should not exceed 16.5 feet (5m).
2. Connect terminals P(+) and DB on the braking resistor to terminals P(+) and DB on the braking unit. The wiring length (twisted pair cables, etc.) should not exceed 33 feet (10m). If terminals P(+) and N(-) on the drive are not used, leave the terminals open. If P(+) is connected to N(-), or the braking resistor is connected directly, the resistor will burn up.
3. Auxiliary contacts 1 and 2 of the braking unit have polarity.
4. Refer to DB unit instruction book for paralleled resistors.

Note: Braking units and resistors are rated on degree of braking, duration and system frequency of braking cycle. Verify units meet application requirements.

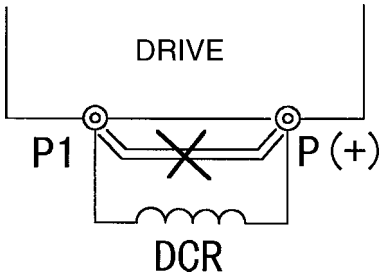

Fig. 2-3-3

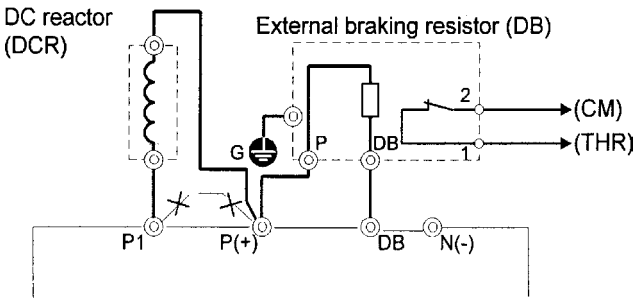

Fig. 2-3-4 Connection (15 Hp or less)

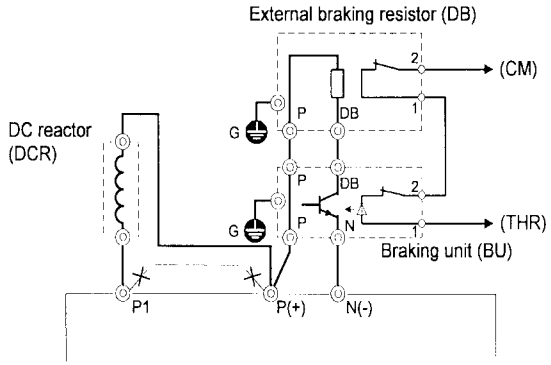

Fig. 2-3-5 Connection 20 Hp or more, 100 Hp or more parallel resistors, 200 Hp or more parallel braking units.

(7) Ground terminal

The grounding connector should be sized in accordance with the NEC or Canadian Electrical Code. The connection should be made by a UL listed or CSA certified closed-loop terminal connector sized for the wire gauge involved. The connector is to be fixed using the crimp tool specified by the connector manufacturer.

(8) Auxiliary power switching connector (CN UX) (for drives of 40 Hp or more)

When a drive of 40 Hp or more requires main circuit power voltage as listed in Table 2-3-3, disconnect the auxiliary power switching connector CN UX from U1 and connect to U2. For the switching method, see Fig. 2-3-7.

Table 2-3-3 Main Voltage Requiring Auxiliary Power Switching Connector

Frequency [Hz]	Power Voltage Range [VAC]
50	380 - 398
60	380 - 430

CAUTION

- Check that the number of phases and rated voltage match those of the AC power supply.
- Do not connect the AC power supply to the output terminals (U, V, W). Injury may result.
- Do not directly connect a braking resistor to the DC terminals (P[+] and N[-]). Fire may result.

The switching connectors are mounted on the power PCB above the control PCB as shown on the right.

Note: To remove a connector, unlock the connector (using the locking mechanism) and pull. To install, firmly push the connector until it clicks into place.

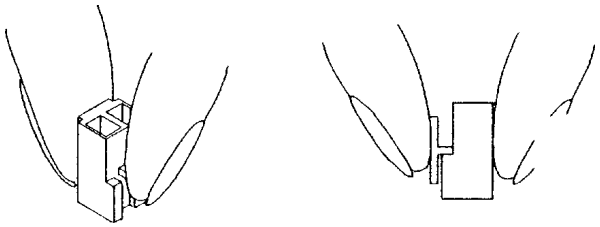

CN UX

<Enlarged view of part A>

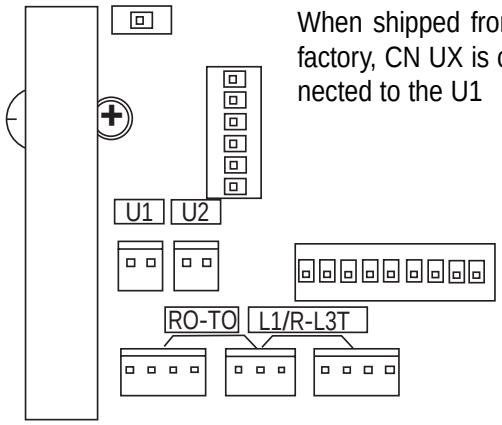

When shipped from the factory, CN UX is connected to the U1 side.

<3D view of part A>

Factory Shipment Status Connector CN UX: U1

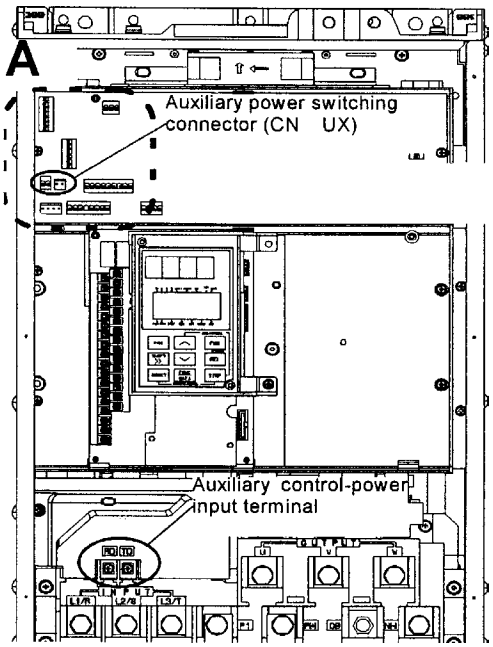

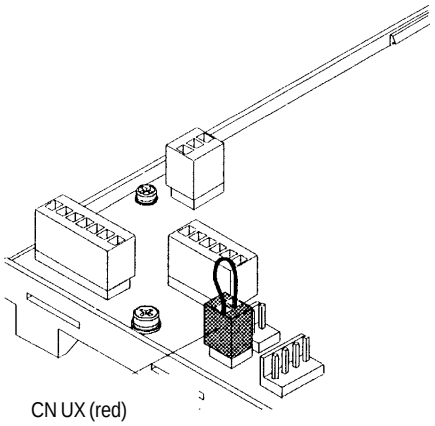

CN UX (red)

2.3.3 Connecting the Control Terminals

Table 2.3.3 lists the functions of the control circuit terminals. A control circuit terminal should be connected according to its function setting.

Table 2-3-3

Classification	Terminal Symbol	Terminal Name	Function
Analog input	13	Potentiometer power supply	Used for +10V DC power supply for frequency setting POT (resistance of 1 to 5k Ohms)
	12	Voltage input	1. Frequency is set according to the analog input voltage supplied from an external circuit. - 0 to +10V DC / 0 to 100% - Reversible operation using positive and negative signals: 0 to +/- 10V DC / 0 to 100% - Reverse operation: +10 to 0V DC / 0 to 100% 2. Input feedback signal for PID control is input. 3. The analog input value from the external circuit is used for torque control * Input resistance: 22 k Ohms
	V2	Voltage input supplied from an external circuit.	¨ Frequency is set according to the analog input voltage - 0 to +10V DC/0 to 100% - Reverse operation: +10 to 0V DC/0 to 100% * Use only one terminal - V2 or C1 Exclusively * Input resistance: 22 k Ohms
	C1	Current input	1. Frequency is set according to the analog input current supplied from an external circuit. - 4 to 20mA DC / 0 to 100% - Reverse operation: 20 to 4mA DC / 0 to 100% 2. The feedback signal for PID control is input. 3. PTC thermistor input 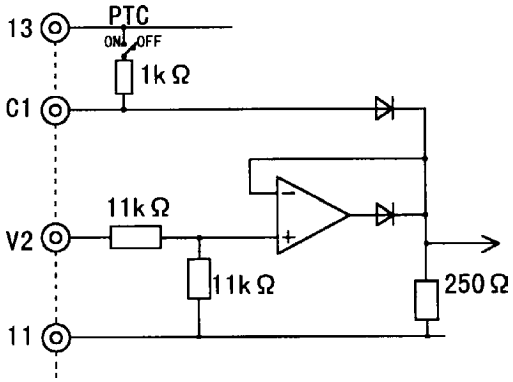 * Use only one terminal - V2 or C1 Exclusively * Input resistance: 250 Ohms * PTC switch is off when PTC function is not used
	11	Analog input common	Common terminal for analog input signals

<table>
<tr><td rowspan="12">Digital input</td><td>FWD</td><td>Forward operation / Stop command</td><td>Used for forward operation (when FWD-CM is on) or deceleration and stop (when FWD-CM is opened)</td></tr>
<tr><td>REV</td><td>Reverse operation / Stop command</td><td>Used for reverse operation (when REV-CM is on) or deceleration and stop (when REV-CM is opened)</td></tr>
<tr><td>X1</td><td>Digital input 1</td><td rowspan="10">The coast-to-stop command, external alarm, alarm reset, multi-step frequency selection, and other functions (from an external circuit) can be assigned to terminals X1 to X9. For details, see "Setting the Terminal Functions E01 to E09" in Section 5.2 Function Explanation.
<Specifications of digital input circuit>
<table><tr><td>Item</td><td></td><td>min.</td><td>typ.</td><td>max.</td></tr><tr><td>Operating voltage</td><td>ON</td><td>0V</td><td>–</td><td>2V</td></tr><tr><td></td><td>OFF</td><td>22V</td><td>24V</td><td>27V</td></tr><tr><td>Maximum load current</td><td>ON</td><td>–</td><td>3.2mA</td><td>4.5 mA</td></tr><tr><td>Leakage current</td><td>OFF</td><td>–</td><td>–</td><td>0.5 mA</td></tr></table>
 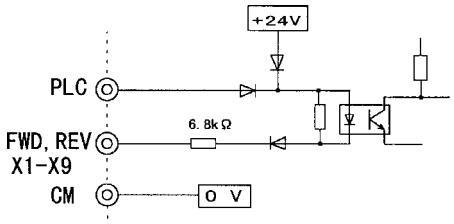 </td></tr>
<tr><td>X2</td><td>Digital input 2</td></tr>
<tr><td>X3</td><td>Digital input 3</td></tr>
<tr><td>X4</td><td>Digital input 4</td></tr>
<tr><td>X5</td><td>Digital input 5</td></tr>
<tr><td>X6</td><td>Digital input 6</td></tr>
<tr><td>X7</td><td>Digital input 7</td></tr>
<tr><td>X8</td><td>Digital input 8</td></tr>
<tr><td>X9</td><td>Digital input 9</td></tr>
<tr><td></td><td></td></tr>
<tr><td>P24</td><td>Control Unit power Supply</td><td>+24VDC power supply for control input. Maximum output current 100mA</td></tr>
<tr><td>PLC</td><td>PLC signal power</td><td>Used to connect PLC power supply for output signals; rated nominal voltage = 24 VDC (22 to 27 V DC range) at sink logic operation.</td></tr>
<tr><td>CM</td><td>Digital input common</td><td>Common terminal for digital input signals and P24</td></tr>
<tr><td>Analog output</td><td>FMA

(11: common terminal)</td><td>Analog monitor</td><td>Outputs monitor signal using analog DC voltage 0 to +10V DC.
The signal indicates one of the following:
- Output frequency (before slip compensation)
- Load factor
- Output frequency (after slip compensation)
- Power consumption
- Output current
- PID feedback value
- Output voltage
- PG feedback value
- Output torque
- DC link circuit voltage
* Connectable impedance: min. 5k ohms</td></tr>
<tr><td>Pulse output</td><td>FMP
(CM: common terminal)</td><td>Frequency monitor
(pulse waveform output)</td><td>Outputs a monitor signal using the pulse waveform.
This signal has the same function as the FMA signal.</td></tr>
</table>

<table>
<tr><td rowspan="5">Transistor</td><td>Y1</td><td>Transistor output 1</td><td rowspan="5">A running signal, frequency equivalence signal, overload early warning output signal, and other signals from the drive are output (as transistor output) to arbitrary ports. For details, see "Setting the Terminal Functions E20 to E23" in Section 5.2 Function Explanation.
* <Specifications of transistor output circuit>
 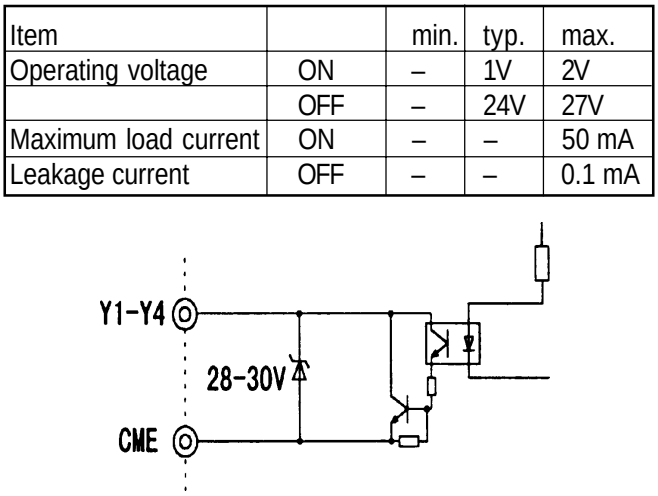
</td></tr>
<tr><td>Y2</td><td>Transistor output 2</td></tr>
<tr><td>Y3</td><td>Transistor output 3</td></tr>
<tr><td>Y4</td><td>Transistor output 4</td></tr>
<tr><td></td><td></td></tr>
<tr><td></td><td>CME</td><td>Transistor output common</td><td>Common terminal for transistor output signals. This terminal is insulated from terminals (CM) and [11].</td></tr>
<tr><td>Relay output</td><td>30A,30B,30C</td><td>Alarm outputs for any fault.</td><td>If the drive is stopped by an alarm (protective function), the alarm signal is output from the relay contact output terminal (1SPDT). Contact rating: 250 VAC, 0.3A,cosØ = 0.3, 48 VDC, 0.5A for CE Marking
An excitation mode (excitation at alarm occurrence or at normal operation) can be selected.</td></tr>
<tr><td></td><td>Y5A,Y5C</td><td>Multi-purpose signal</td><td>These signals can be output similar to the Y1 to Y4 signals above. The contact rating is the same as that of the alarm output above.</td></tr>
<tr><td>Communic-ation</td><td>DX+,DX–</td><td>RTU communication</td><td>Input / output signal terminals for RTU communication input / output Up to 31 inverters can be connected using the daisy chain method.</td></tr>
<tr><td></td><td>SD</td><td>Communication cable shield connection terminal</td><td>Terminal for connecting the cable shield. The terminal is electrically floating.-</td></tr>
</table>

Item		min.	typ.	max.
Operating voltage	ON	–	1V	2V
	OFF	–	24V	27V
Maximum load current	ON	–	–	50 mA
Leakage current	OFF	–	–	0.1 mA

(1) Analog input terminals (13, 12, C1, and 11)

1. These terminals receive low level analog signals that may be affected by external noise. The cables must be as short as possible (20 meters or less), must be shielded, and the shields must be grounded. If the cables are affected by external induction noise, the shielding effect may be improved by connecting the shield to terminal [11].

2. If contacts must be connected to these circuits, twin (bifurcated) contacts for handling low level signals must be used. A contact must not be connected to terminal [11].

3. If an external analog signal output device is connected to these terminals, it may malfunction as a result of drive noise. To prevent malfunction, connect a ferrite core or capacitor to the external analog signal output device.

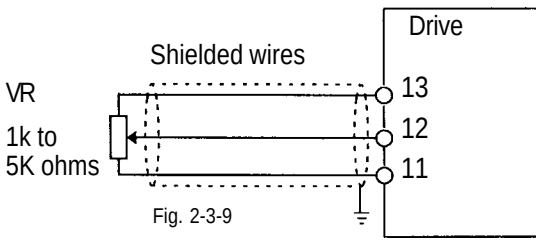

Fig. 2-3-9

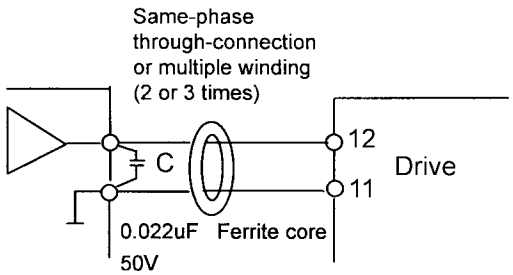

Fig. 2-3-10 Example of Noise Prevention

(2) Digital input terminals (FWD, REV, X1 to X9, PLC, and CM)

1. Digital input terminals (e.g., FWD, REV, X1 to X9) are generally turned on or off by connecting or disconnecting the line to or from the CM terminal.

   If digital input terminals are turned on or off by switching the PLC's open collector output using an external power supply, a resulting bypass circuit may cause the drive to malfunction. To prevent a malfunction, connect the PLC terminal as shown in Fig. 2-3-11.

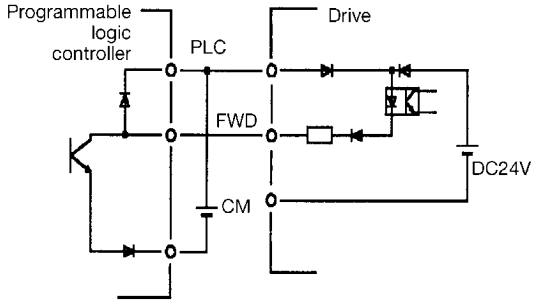

Fig. 2-3-11 Prevention of Bypass Current by External Power

2. When using a contact input, a high-quality relay with reliable contacts must be used.

(3) Transistor output terminals (Y1 to Y4, CME)

1. These terminals have a circuit configuration as shown in Table 2-3-3, "Transistor Output". Confirm the polarity of the external power supply.
2. To connect a control relay, connect a surge absorbing diode to both ends of its exciting coil.

(4) Sink or Source Logic Selection.

1. Set SWI for Sink or Source Connection to the PLC. The factory default setting is Sink and this instruction manual explains Sink logic function only.
2. When you need to connect source type logic, refer to Basic Connection Diagram Fig. 2-3-3 and Fig. 2-3-4 and Technical Information Manual. (Sink Logic is commonly used in the USA and Source Logic is commonly used in Europe.)

(5) Others

1. To prevent a malfunction as a result of noise, control terminal cables must be placed as far as possible from the main circuit cables.
2. The control cables inside the inverter must be secured to prevent direct contact with the main circuit (e.g., main circuit terminal block).

WARNING

Control lines generally do not have enhanced insulation. If the insulation of a control line is damaged, the control signals may be exposed to high voltage in the main circuit. The Low Voltage Directive in Europe also restricts the exposure to high voltage. Electric shock may result

CAUTION

The inverter, motor, and cables generate noise. Check that the ambient sensors and devices do not malfunction. Accident may result.

(6) Wiring of control circuit (inverter of 40 Hp or more)

1. Pull out the control circuit wiring along the left panel as shown in Fig. 2-3-12.
2. Secure the cable to cable binding hole A (on the left wall of the main circuit terminal block) using a cable-tie
   (e.g., Insulock). The cable-tie must not exceed 0.14" (3.5mm) in width and 0.06" (1.5mm) in thickness.
3. When the optional PC board is mounted, the signal lines must be secured to cable binding hole B.

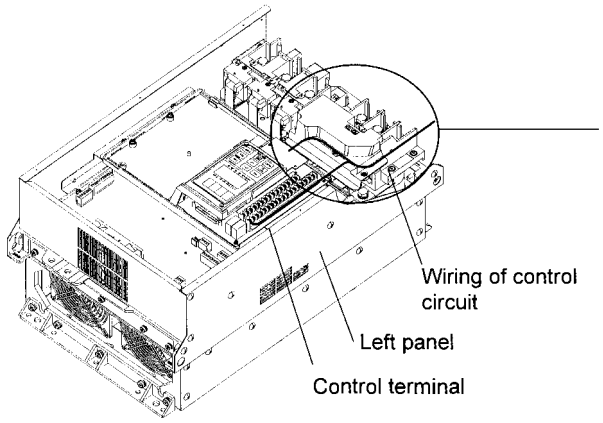

Fig. 2-3-12 The Control Wiring Route

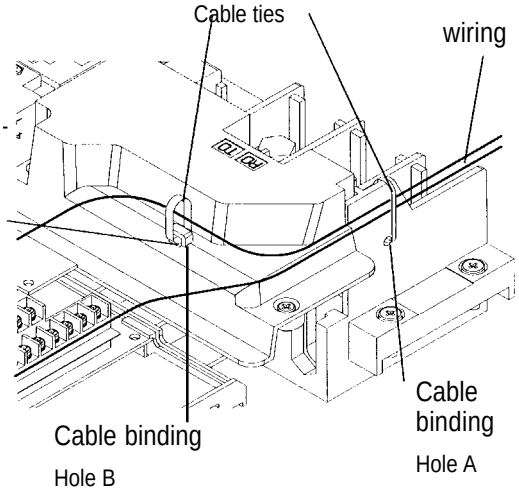

Fig. 2-3-13 Securing Positions for Inverter Control Circuit Wiring (40 HP or more)

2.3.4 Terminal Configuration

(1) Main circuit terminals

1/4 to 1 Hp 230 VAC
1/2 to 1 Hp 460 VAC

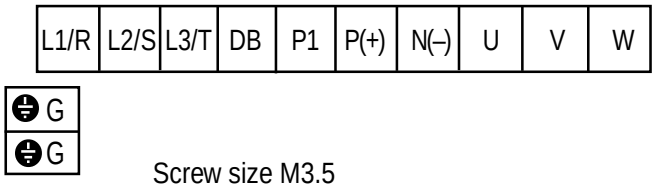

Screw size M3.5

60 To 100 Hp 230 VAC
125 to 200 Hp 460 VAC

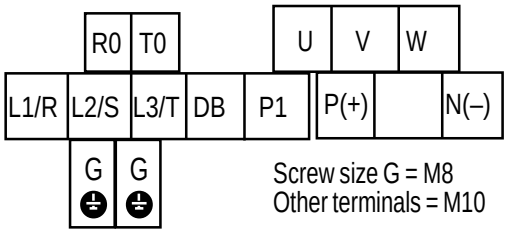

Screw size G = M8
Other terminals = M10

2 to 5 Hp 230 VAC
2 to 5 Hp 460 VAC

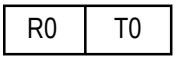

Screw size M3.5

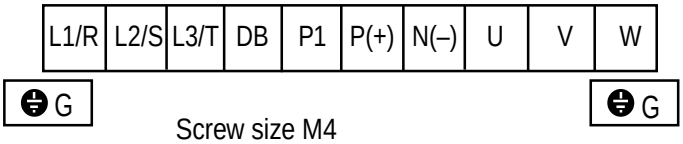

Screw size M4

125 Hp 230 VAC

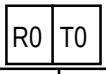

Screw size M4

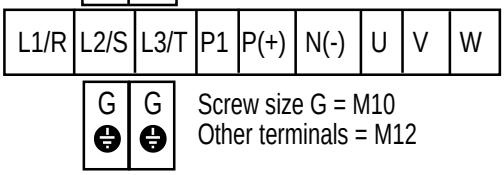

Screw size G = M10
Other terminals = M12

7.5 to 15 Hp 230 VAC
7.5 to 15 Hp 460 VAC

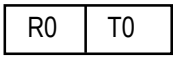

Screw size M3.5

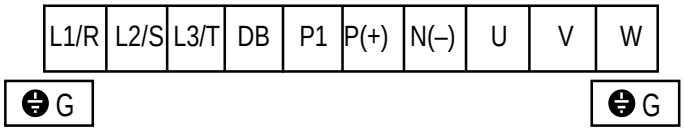

Screw size M5

150 Hp 230 VAC
250 to 450 Hp 460 VAC

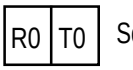

Screw size M4

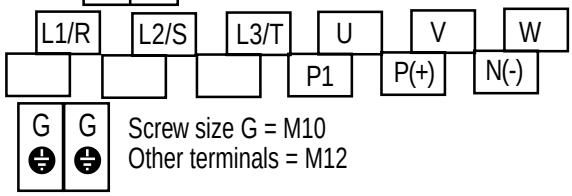

Screw size G = M10
Other terminals = M12

20 to 30 Hp 230 VAC
20 to 30 Hp 460 VAC

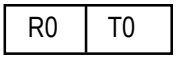

Screw size M3.5

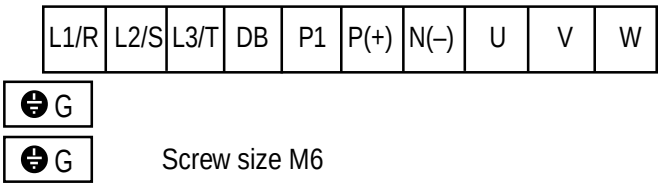

Screw size M6

500, 600 Hp 460 VAC

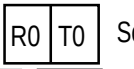

Screw size M4

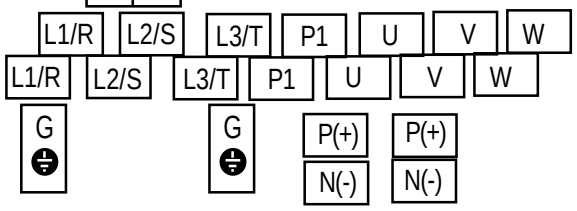

Screw size G = M10
Other terminals = M12

40 to 50 Hp 230 VAC
40 to 100 Hp 460 VAC
Screw size M4

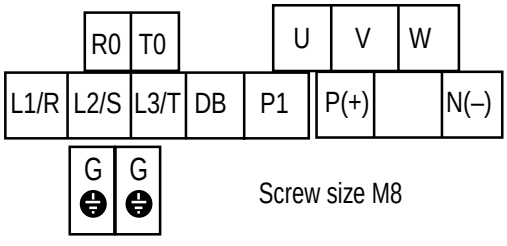

Screw size M8

700, 800 Hp 460 VAC

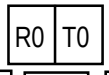

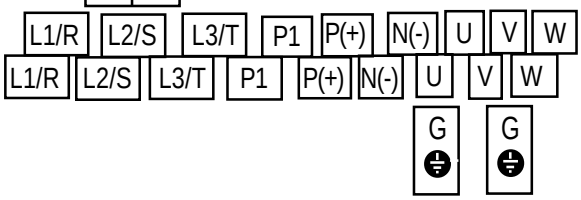

Screw size RO,TO = M4 G = M10
Other terminals = M12

(2) Control circuit terminals

	30A	Y5A	CMY	Y3	Y1	C1	FMA	FMP	PLC	X1	X2	X3	X4	X5	X6	X7	X8	X9
30C	30B	Y5C	Y4	Y2	11	12	13	V2	CM	CM	FWD	REV	P24	P24	DX-	DX+	SD	

2.3.5 GP10 Drive Cable Size, Tightening Torque and Circuit Protection Rating

2-3-5 GP10-Variable Torque, Constant Torque Drive Cable Size, Tightening Torque and Circuit Protection Rating

	Incoming Device				Tightening Torque lb-Inch (Nm)					Cable size AWG				
	Input Fuse													
HP	L1/R, L2/S, L3/T (Nominal)	L1/R, L2/S, L3/T (Maximum) (*1)	Auxiliary Input R0, T0	Input Circuit Breaker (*1)	L1/R, L2/S, L3/T, U, V, W, P1, P(+)	E(G)	DB circuit (*2) P(+), N(-), DB	R0, T0	Control	L1/R, L2/S, L3/T	U, V, W	DC Reactor P1, P(+)	DB circuit (*2) P(+), N(-), DB	R0, T0
230VAC Input														
0.25/0.25	3	3	3	15	10.6 (1.2)		10.6	-	6.2 (0.7)				16	-
0.5/0.5	5	6	3	15			(1.2)	-			16			-
1/1	10	15	3	20				-						-
2/2	15	20	3	30	20.8 (2.36)		20.8	10.6 (1.2)						14
3/3	20	30	3	40			(2.36)				14		14	
5/5	35	50	3	60							10			
7.5/5	60	80	3	100	31.0 (3.5)		31.0				8			
10/9.5	70	125	3	125			(3.5)				6			
15/10	100	150	3	175	51.3 (5.8)						4			
20/15	125	200	3	225							3			
25/20	150	225	3	250							2			
30/25	175	250	3	300							1			
40/30	200	-	5	200						4/0	1/0	2/0		10
50/40	225	-	5	225	119(13.5)									
60/50	300	-	5	300	239(27)	119(13.5)	119			Qty2 - 1	3/0	4/0	10	
75/60	350	-	5	350			(13.5)			Qty2 - 2/0	4/0	Qty2 - 1		
100/75	300	-	5	300						Qty2 - 3/0	Qty2 - 1/0	Qty2 - 2/0	8	
125/100	400	-	5	400	425(48)	239(27)				Qty 2 - 2/0	Qty2 - 3/0	Qty2 - 4/0	6	
150/125	450	-	5	450						Qty2 - 4/0	Qty2 - 4/0	Qty2 - 250	4	
460VAC Input														
0.5/0.5	3	3	3	15	10.6 (1.2)		10.6	-	6.2 (0.7)				16	-
1/1	5	6	3	15			(1.2)	-			16			-
2/2	10	10	3	15	20.8 (2.36)		20.8	10.6 (1.2)						14
3/3	15	15	3	20			(2.36)							
5/5	20	25	3	35							14		14	
7.5/5	30	45	3	50	31.0 (3.5)		31.0				12			
10/7.5	40	60	3	70			(3.5)				10			
15/10	50	90	3	90	51.3 (5.8)									
20/15	70	110	3	110							8			
25/20	80	125	3	150							6			
30/25	100	125	3	175							4			
40/30	100	-	10	100	119(13.5)					2	3	3		10
50/40	125	-	10	125						1	2	2		
60/50	175	-	10	175			51.3			2/0	2	1		
75/60	150	-	10	150			(5.8)			3/0	1/0	2/0		
100/75	175	-	10	175	239(27)	119(13.5)				2/0	3/0	4/0		
125/100	200	-	10	200		239(27)				3/0	4/0	Qty2 - 1	10	
150/125	225	-	10	225			119			Qty2 - 1/0	Qty2 - 1/0	Qty2 - 1/0	8	
200/150	300	-	10	300			(13.5)			Qty2 - 1/0	Qty2 - 2/0	Qty2 - 3/0		
250/200	400	-	10	400	425(48)		239			Qty2 - 3/0	Qty2 - 3/0	Qty2 - 4/0	6	
300/250	450	-	10	450			(27)			Qty2 - 4/0	Qty2 - 250	Qty2 - 300	4	
350/300	500	-	10	500						Qty2 - 250	Qty2 - 300	Qty2 - 350		
400/350	600	-	10	600			(*3)			Qty2 - 350	Qty2 - 400	Qty2 - 500	(*3)	
450/350	700	-	10	700						Qty2 - 500	Qty2 - 500	Qty2 - 700		
500/400	700	-	10	700						Qty2 - 350	Qty2 - 400	Qty2 - 500		
600/450	1000	-	10	1000						Qty2 - 500	Qty2 - 500	Qty2 - 70		
700/500	1000	-	10	1000						Qty2 - 600	Qty2 - 600	Qty2 - 80		
800/600	1200	-	10	1200						Qty2 - 700	Qty2 - 750	Qty2 - 1000		

(*1)Class J Fuse or Circuit Breaker reted 600V with the maximum current rating as shown in the above table shall be connected to the drive for 30HP and less.
(*2)Based on GE Fuji standard DB unit and DB resistor designs. Other rating require careful review.
(*3) Consult factory
Device ratings such as system coordination, short-circuit rating and type must be carefully reviewed by the user.
Wire size from NEC tables 310-16. Copper wire rated 60 Deg. C for 100amps or less, 75 Deg. C for over 100 amps in 30 Deg. C ambient and 1.25 times Drive rated amps.

2.3.6 DC Link Reactor

Dimensions in inches

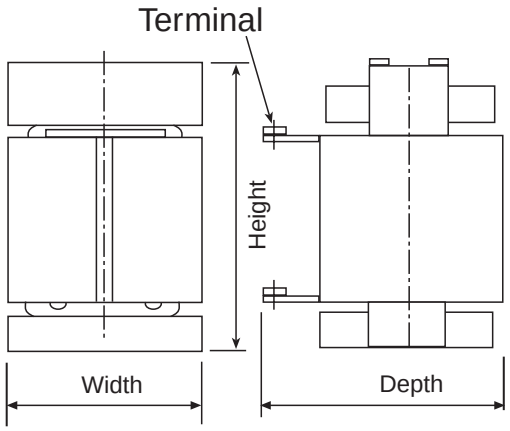

Hp	Model No.	Width	Depth	Height	Weight	Loss [W]
230V GP10-Variable Torque/Constant Torque						
100/75	DCR2-75B	7.87	10.63	7.09	37	55
125/100	DCR2-90B	7.09	11.02	8.46	37	57
150/125	DCR2-110B	7.48	12.99	9.05	46	67
460V GP10-Variable Torque/Constant Torque						
100/75	DCR4-75B	7.48	10.63	6.89	35	58
125/100	DCR4-90B	7.48	11.02	7.87	44	64
150/125	DCR4-110B	7.48	11.02	7.87	46	73
200/150	DCR4-132B	7.87	11.02	8.07	55	84
250/200	DCR4-160B	8.27	12.6	8.07	68	90
300/250	DCR4-200B	8.27	12.99	9.06	75	126
350/300	DCR4-220B	8.66	13.78	9.06	81	131
400/350	DCR4-280B	8.66	14.57	9.65	95	133
450/350	DCR4-280B	8.66	14.57	9.65	95	150
500/400	DCR4-355B	9.84	12.99	8.78	99	205
600/450	DCR4-400B	9.84	13.78	9.17	106	215
700/500	DCR4-450B	10.63	13.78	10.35	121	272
800/600	DCR4-500B	11.1	14.17	10.35	143	292

Note:

- GP10 Drives rated 100 Hp and above are furnished with a DC link reactor. This reactor must be installed between terminal P1 and P+ prior to commissioning of the Drive.
- The weight of the DC Link Reactor is not included with that of the Drive.
- DC Link Reactor is provided as open type and is separately mounted. Enclosure to be provided by others.

3. Operation

3.1 Inspection and Preparation Before Operation

Check the following before operation:

1. Check that the connections are correct.
   In particular, check that the power supply is not connected to any of the U, V, or W output terminals and that the ground terminal is securely grounded.
2. Check for short circuits and ground faults between the terminals and sections under power.
3. Check for loose terminals, connectors, or screws.
4. Check that the motor is disconnected from the mechanical equipment.
5. Turn off switches before turning on power to ensure that the drive will not start or operate abnormally at power-on.
6. Check the following after power-on:
   a. No alarm message is displayed on the keypad panel (see Figure 3-1-2).
   b. The fan inside the drive is rotating. (For drives with 2Hp or more.)

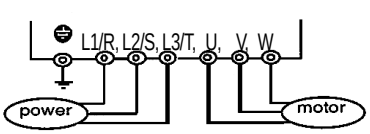

Fig. 3-1-1 Drive connection

3.2 Operation Method

There are various methods of operation. Select a method of operation

WARNING

Be sure to have the drive cover in place before turning on the power (closed). Never remove the cover while power is applied to the drive. To ensure safety, do not operate switches with wet hands. Electric shock may result.

according to the operating requirements and specifications; refer to Section 4-2 Operating the Keypad Panel, and Chapter 5 Function Selection. Table 3-2-1 lists general methods of operation.

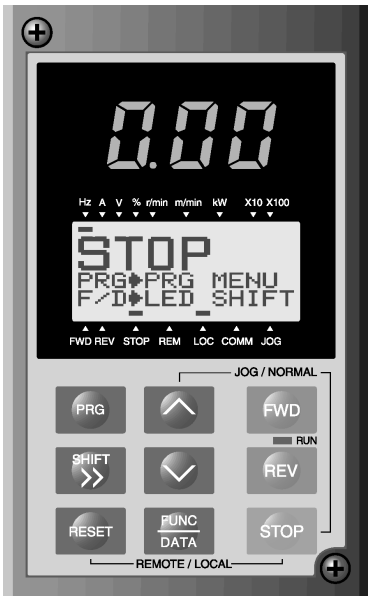

Fig. 3-1-2 Display on keypad panel at power-on

3.3 Trial Run

Once inspection is completed (see Section 3-1), proceed with a trial run. The motor is initially disconnected and the drive is operated (factory setting) using the keypad panel.

1. Turn power on and confirm that the LED monitor display 0.00 Hz is blinking.
2. Set the frequency to about 5 Hz using ∧ key.
3. To start the run, press **FWD** key (for forward rotation) or **REV** key (for reverse rotation). To stop, press **STOP** key. Verify frequency increases from zero to the set point.

Connect motor and repeat steps 1-3

4. Check the following items:
   a. Is the direction of rotation correct?
   b. Is the rotation smooth (no buzzing or abnormal vibration)?
   c. Are acceleration and deceleration smooth?
5. If no abnormality is detected, increase the frequency and check the above items again. If the results of the trial run are normal, start a formal run.

Operation Command	Frequency Setting	Operation Command
Operation using keypad panel	Keys on keypad panel ∧ ∨	FWD REV STOP
Operation using external terminal signals	∧ ∨	Input from Terminals FWD-CM and REV-CM
	Frequency Setting POT(VR), analog voltage, analog current	

Notes: If an error is detected in the drive or motor's operation, immediately stop and attempt to determine the cause of error by referring to Chapter 7 Troubleshooting.

Since voltage is still present at the main circuit terminals (L1/R, L2/S, L3/T) and auxiliary control power terminals (R0, T0), even when the output from the drive is terminated, do not touch the terminals. The smoothing capacitor in the drive is charged after the power is turned off and it is not discharged immediately. Before touching an electric circuit, confirm that the charge lamp is off or use a multimeter to check that the volatge has decreased below 25 VDC for low voltage at the DC (P-N) terminals.

4. Keypad Panel

The keypad panel has various functions for specifying operations such as frequency setting, run/stop command, confirming and changing function data, confirming status, and copying function code settings.

Review the use of each function before attempting to operate the drive from the keypad panel.

The keypad panel can also be removed or inserted during inverter operation. However, if the keypad panel is removed during keypad panel operation (e.g., run/stop, frequency setting), the drive stops and outputs an alarm.

4.1 Appearance of Keypad Panel

Control keys (valid during keypad panel operation):

Used for drive run and stop

FWD Forward operation command

REV Reverse operation

STOP Stop command

Operation keys:

Used for switching screens, data change,frequency setting, etc.

LED monitor

4-digit display. Used to display data such as setting frequency, output frequency and alarm code.

Auxiliary Information Related to LED Monitor

Indicates selected units or multiple of the data shown on the LED monitor and is displayed on the top line of the LCD monitor. The ■ symbol indicates selected units or multiple number. The symbol ▲indicates that there is an upper screen not currently displayed.

LCD Monitor:

Used to display various items of information such as operation status and function data. An operating guide message, is scrolled and displayed at the bottom of the LCD monitor.This LCD monitor has a backlight feature which turns on when the control power is applied or any keypad key is pressed, and stays on approximately 5 minutes after the last key stroke.

Status Indicators on LCD Monitor:

Displays current operating status:

FWD: Forward operation REV: Reverse operation
STOP: Stop

Displays the selected operating mode:

REM: terminal block
LOC: keypad panel
COMM: communication terminal
JOG: jogging mode

The symbol ▼indicates that there is a lower screen not currently displayed.

RUN LED (valid during operation from keypad panel):

Indicates that an operation command was input by pressing the FWD or REV key.

Operation Keys	Primary Function
PRG	Used to switch the current screen to the menu screen or switch to the initial screen in operation / trip mode.
FUNC DATA	Used to switch the LED monitor or to determine the entered frequency, function code, or data
∧ ∨	Used to change data, move the cursor up or down, or scroll the screen
SHIFT ››	Used to move the cursor horizontally at data change. When this key is pressed with the up or down key, the cursor moves to the next function block.
RESET	Used to cancel current input data and switch the displayed screen. If an alarm occurs, this key is used to reset the trip status (valid only when the initial alarm mode screen is displayed)
STOP + ∧	Used to switch normal operation mode to jogging operation mode or vice versa. The selected mode is displayed on the LCD monitor.
STOP + RESET	Switches operation mode (from keypad panel operation mode to terminal block operation mode or reverse). When these keys are operated, function F01 data is also switched from 0 to 3 or from 1-4 to 0. The selected mode is displayed on the LCD indicator.

4.2 Operation From the Keypad Panel (LCD Screen, Level Structure)

4.2.1 Normal Operation

The keypad panel operating system (screen transition, level structure) is structured as follows:

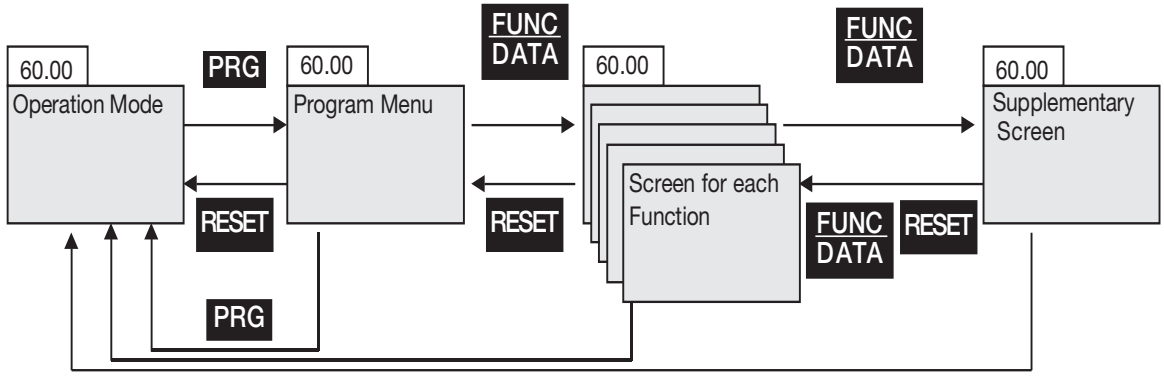

4.2.2 Alarm Modes

If an alarm is activated, operation is changed from normal keypad panel operation to an alarm mode operation. The alarm mode screen appears and alarm information is displayed.

The program menu, function screens, and supplementary screens remain unchanged as during normal operation, though the switching method from program menu to alarm mode is limited to PRG.

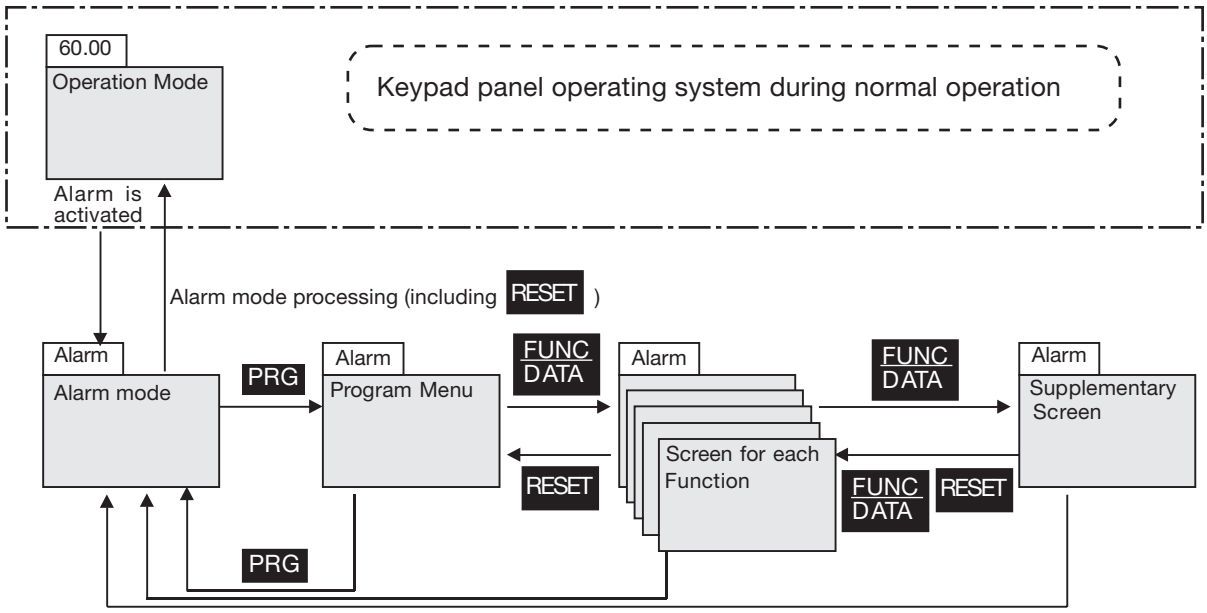

Table 4.2.1 Overview of Contents Displayed for each Level

No.	Level name	Content		
1	Operation Mode	This screen is for normal operation. Frequency setting from the keypad panel and LED monitor switching are possible only when this screen is displayed.		
2	Program Menu	Each function of the keypad panel is displayed in menu form and can be selected. By selecting the desired function from the list and pressing FUNC. DATA the corresponding function screen is displayed. The following functions are available as keypad panel functions (menus).		
		No.	Menu Name	Purpose
		1	DATA SET	The code and name of the function are displayed. Selecting a function displays a data setting screen for checking or modifying data.
		2	DATA CHECK	The code and name of the function are displayed. Select a function to display a screen for checking data. Modifying data is possible as described above by going to the data setting screen.
		3	OPR	Can check various data on the operating status.
		4	I/O CHECK	Can check the status of analog and digital input/outputs for the inverter and options as an I/O checker.
		5	MAINTENANCE	Can check inverter status, life expectancy, communication error status, and ROM version information as maintenance information.
		6	LOAD FCTR	Can measure maximum and average current and average breaking force in load rate measurement.
		7	ALM INF	Can check the operating status and input/output status at the latest alarm occurrence.
		8	ALM CAUSE	Can check the latest alarm or simultaneously occurring alarms and alarm history. Selecting the alarm and pressing FUNC. DATA displays alarm contents for troubleshooting.
		9	DATA COPY	Places the function of one inverter in memory for copying to another drive.
3	Screen for each Function		The function screen selected on the program menu appears, hence completing the function.	
4	Supplementary individual		Functions not completed (e.g., modifying function data, displaying alarm factors) onScreen function screens are displayed on the supplementary screen.	

4.3 Entering Data on the Keypad Panel

4.3.1 Operation Mode

The screen for normal inverter operation includes a screen for displaying drive operating status and a screen for graphically displaying the status in the form of a bar graph. The operator can switch between both screens by using the function (E45).

1) Operating Status (E45=0)

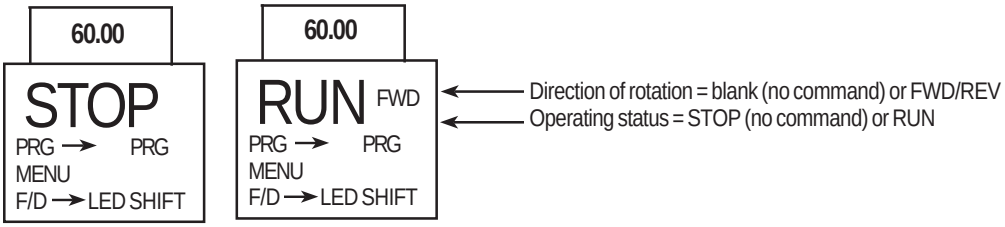

2) Bar Graph (E45=1)

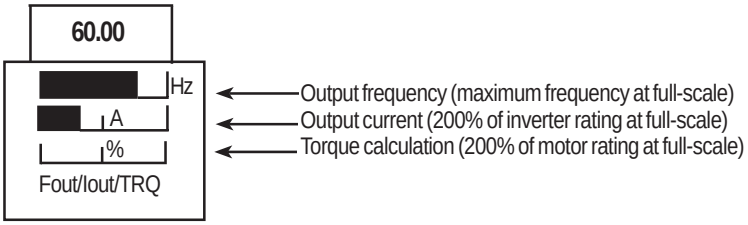

4.3.2 Setting Digital Frequency

On the operation mode screen, press ∧ or ∨ to display the set frequency on the LED. Data is increased or decreased in the smallest possible unit, depending on which key is pressed. The adjustments in data will occur rapidly if the operator holds down ∧ or ∨. To select a digit use SHIFT and then data can be set directly. To save the frequency settings press FUNC DATA.

Press RESET and PRG to to return to the operation mode. If keypad panel settings are not selected, the present frequency setting mode appears on the LCD. When selecting the PID function, the PID command can be set with a process value (refer to technical documentation for details).

1) Digital (keypad panel) settings (F01=0 or C30=0)

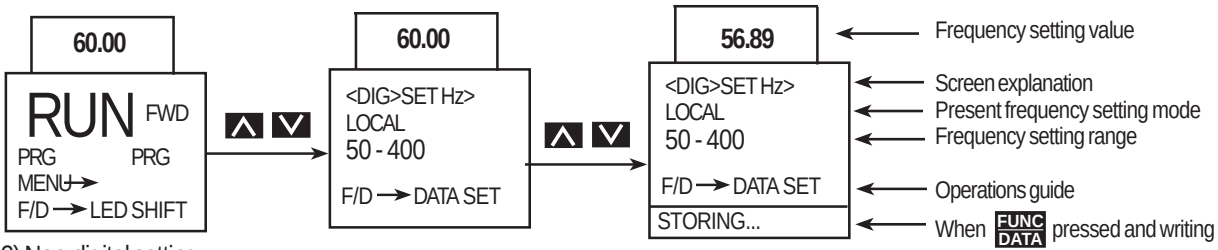

2) Non-digital setting

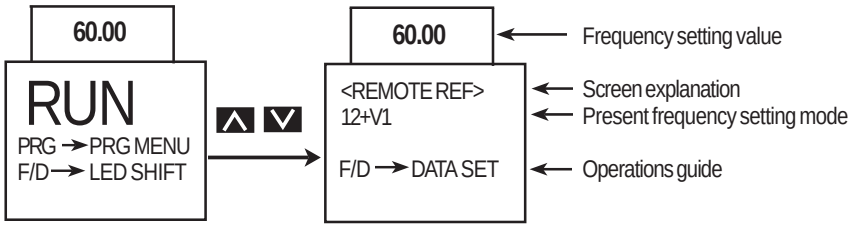

4.3.3 Switching to LED Digital Monitor

During normal operation, press FUNC DATA to switch to LED monitor display. When monitored data is switched, the LED monitor contents are displayed. When power is turned on, the monitor contents set by the function (E43) are displayed on the LED.

E43	When stopping (E44 = 0)	When stopping (E44 = 1)	When running (E44 = 0.1)	Unit	Remarks
0	Setting frequency	Output frequency 1 (before slip compensation)		Hz	
1	Setting frequency	Output frquency 2 (after slip compensation)			
2	Setting frequency	Setting frequency			
3	Output current	Output current		A	
4	Output voltage (specified value)	Output voltage (specified value)		V	
5	Synchronous speed setting value	Synchronous speed		r/min.	For 4 digits or more, the lasr digits are cut, with x10, x100 marked on the indicator.
6	Line speed setting value	Line speed		m/min.	
7	Load rotation speed setting value	Load rotation speed		r/min.	
8	Torque calculation value	Torque calculation value		%	± indication
9	Power consumption	Power consumption		kW	
10	PID setting value	PID setting value		—	
11	PID remote setting value	PID remote setting value		—	Displayed only when PID is effective in PID operation selection.
12	PID feedback value	PID feedback value		—	

4.3.4 Program Menu Screen

The Program Menu screen is shown below. Only four items can be displayed simultaneously. Move the cursor with ∧ or ∨ to select an item, then press FUNC DATA to display the next screen.

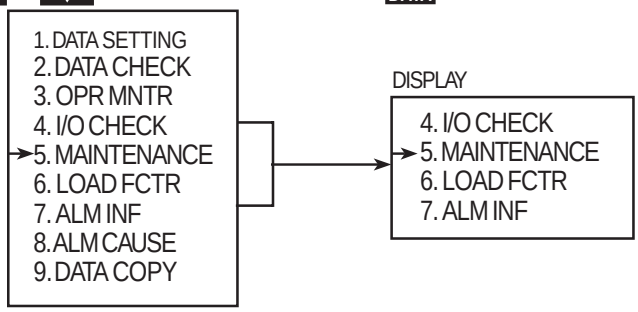

4.3.5 Setting Function Data

On the Program Menu screen, select **1. Data Setting.** The Function Select screen appears with function codes and names on it. Select the desired function.

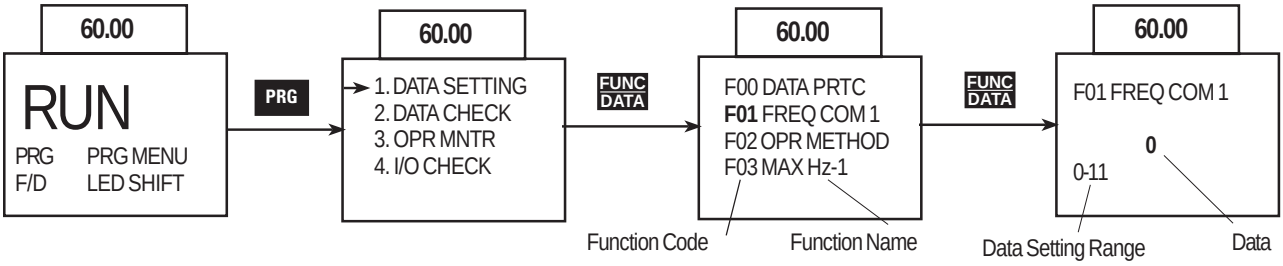

The function code consists of alphanumeric characters with unique letters assigned to each function group.

Table 4-3-1

Function Code	Function	Remarks
F00 - F42	Fundamental functions	
E01 - E47	Terminal Extension Functions	
C01 - C33	Frequency Control Functions	
P01 - P09	Motor Parameters	
H03 - H39	High Performance Functions	
A01 - A18	Alternative Motor Parameters	
o01 - o29	Optional Functions	Can only be selected with an option connected

To scroll the Function Select screen rapidly, use >> + ∧ or >> + ∨ to move the screen as a unit sorted alphabetically.

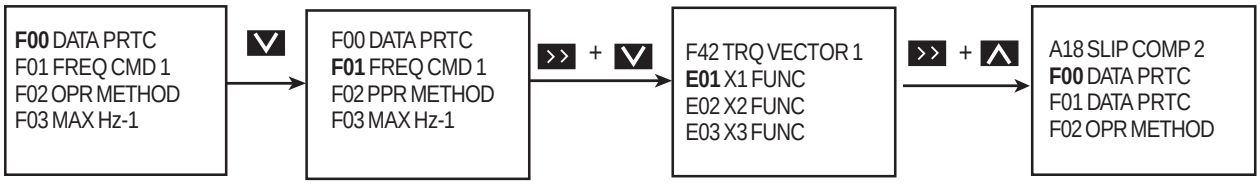

Select the desired function and press FUNC DATA to switch to the Data Setting screen.

On the Data Setting screen, the data values on the LCD can be increased or decreased in the smallest possible unit by pressing ∧ or ∨ . Holding down ∧ or ∨ causes the values to increase or decrease more rapidly. Otherwise, select the digit to be modified using >> and then set data directly. When data is modified, the value before modification will be displayed at the same time for reference purpose. To save the data, press FUNC DATA. Pressing cancels the changes made and returns control to the Function Select screen. The modified data will be effective in inverter operation after the data has been saved by FUNC DATA. If the data is not saved, there is no change to the inverter operation.

When data setting is disabled in the case of "Data protected" or "Data setting invalid during inverter running," make the necessary changes as indicated in Table 4-3-2 below.

Table 4.3.2

Display	Reason for No Modification	Release Method
LINK ACTIVE	Currently writing from RS-485 / RTU option to function is being made	Send a cancel command to function writing from RS-485 RTU. Stops a "write" operation from the link
NO SIGNAL(WE)	The edit enabling command function is selected using a general-purpose input terminal	For functions E01 to E09, turn data terminal 19 (edit enabling command selection) ON
DATA PRTCTD	Data protection is selected for function F00.	Change function F00 to 0
INV RUNNING	An attempt was made to change a function that cannot be changed during inverter operation.	Stop inverter operation
FWD/REV ON	An attempt was made to change a function that cannot be changed with the FWD/REV command on.	Turn FWD/REV command off

4.3.6 Checking Function Data

Select 2. DATA CHECK on the Program Menu screen. The Function Select screen then appears with function codes and names.

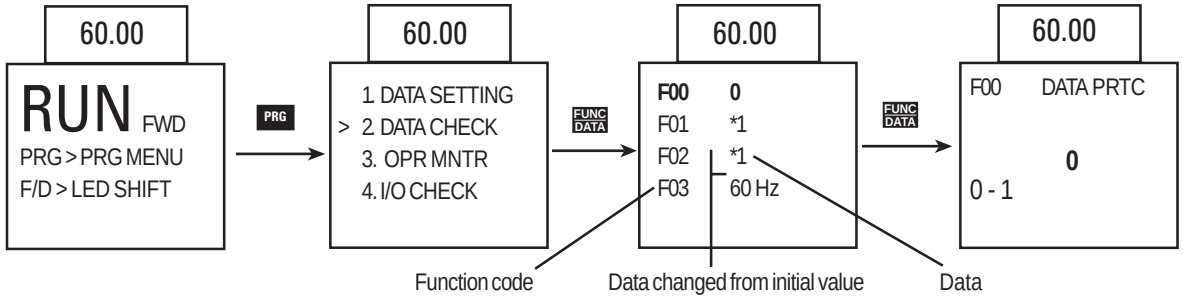

Select the desired function and press FUNC/DATA to check the function data. By pressing FUNC/DATA, the screen switches to the Data Setting screen, where data can be modified.

4.3.7 Monitoring Operating Status

Select 3. OPR MNTR on the Program Menu screen to display the current inverter operating status. Use ∧ and ∨ to switch between the four operation monitor screens.

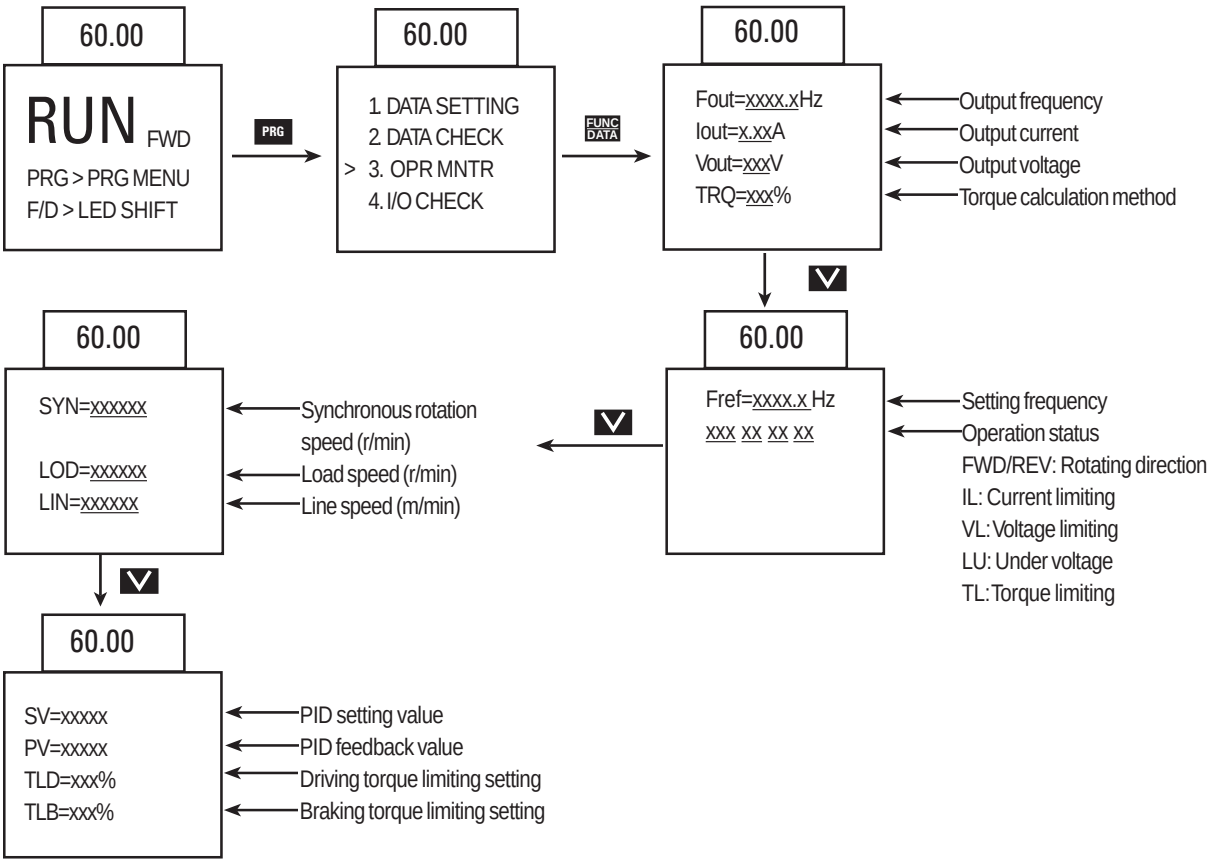

4.3.8 I/O Check

Select 4. I/O on the Program Menu screen. Check to display analog and digital input/output signal status for the drive and options. Use ∧ and ∨ to switch between the seven screens of data.

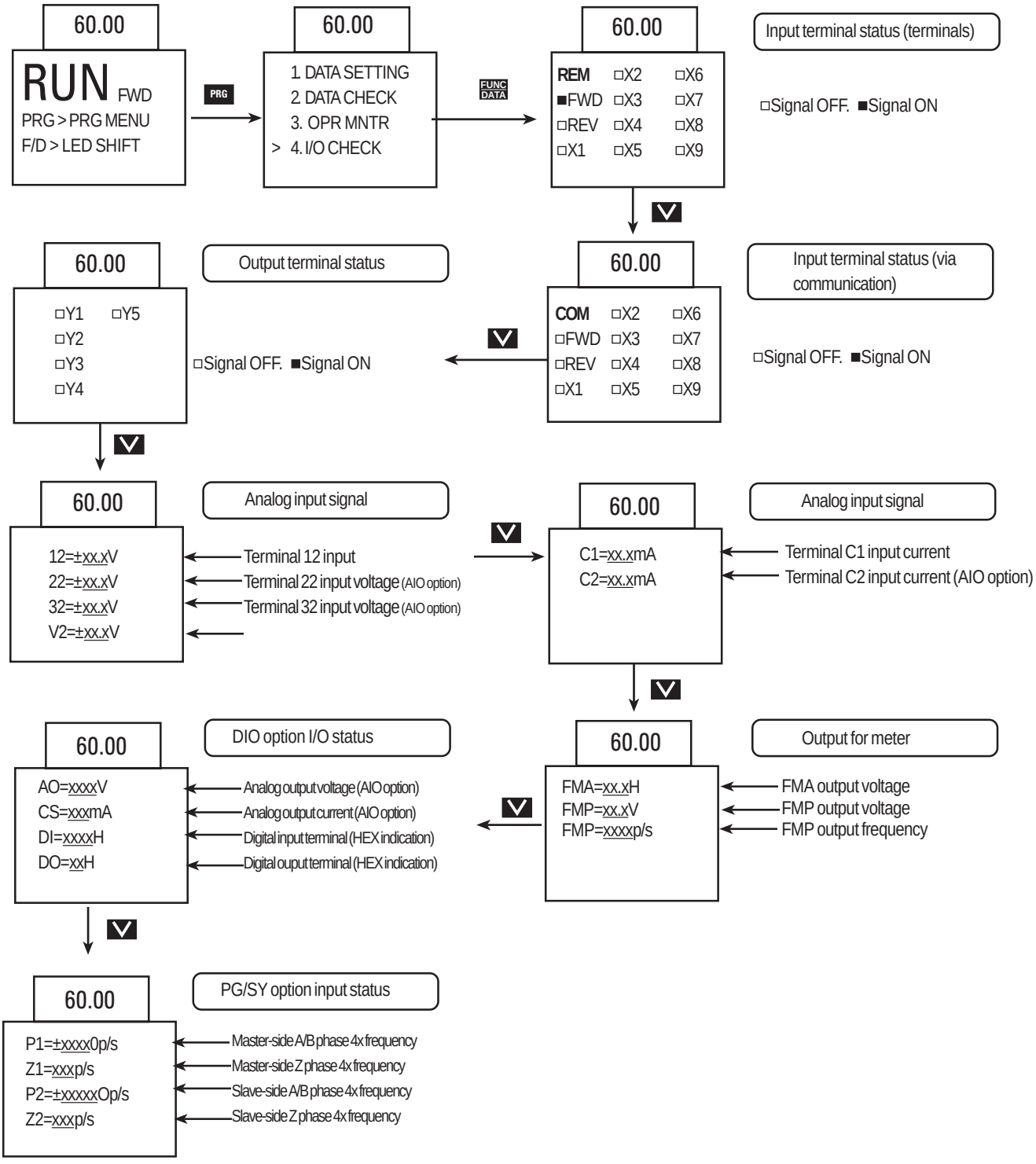

4.3.9 Maintenance Information

Select 5. on the Program Menu screen. Maintenance to display information necessary for maintenance and inspection. Use ∧ and ∨ to switch between the five screens of data.

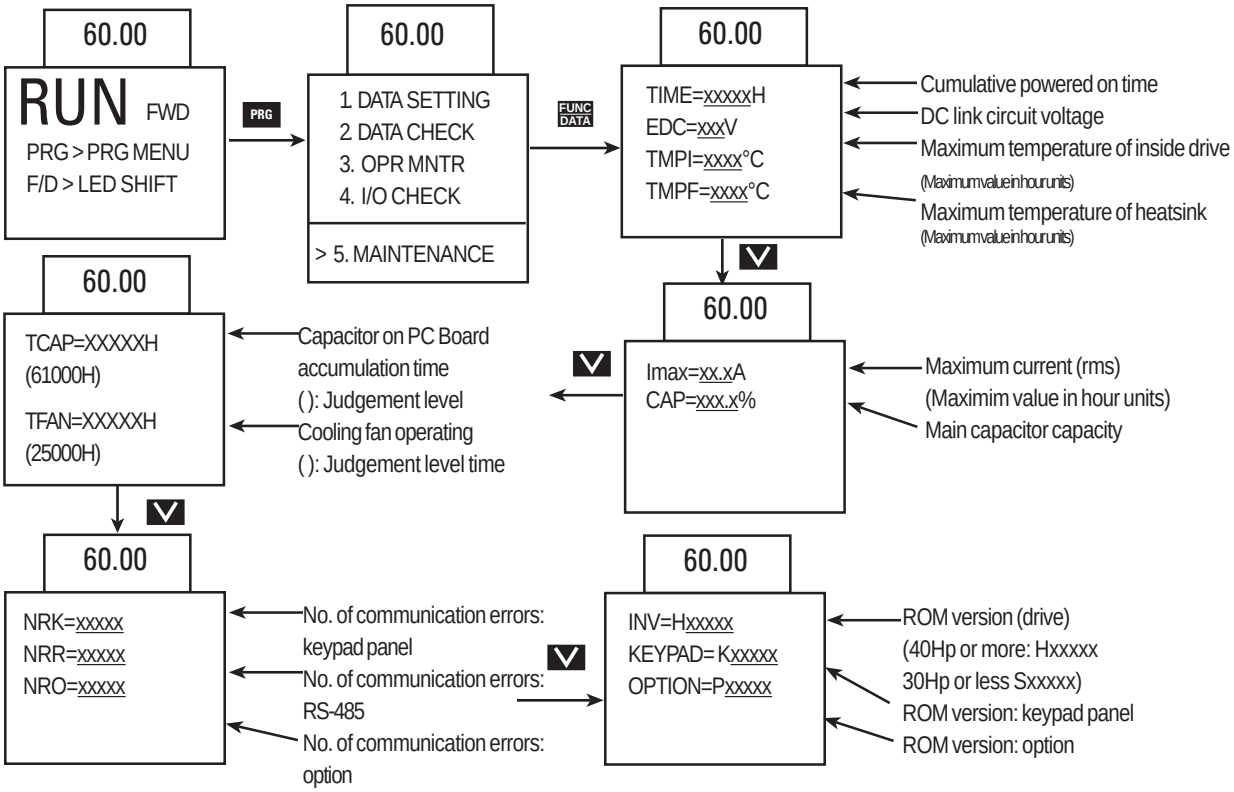

4.3.10 Load Rate Measurement

Select 6. Load Rate Measurement (LOAD FCTR) on the Program Menu screen. The maximum current, average current, and average braking power during the set measuring time are measured and displayed.

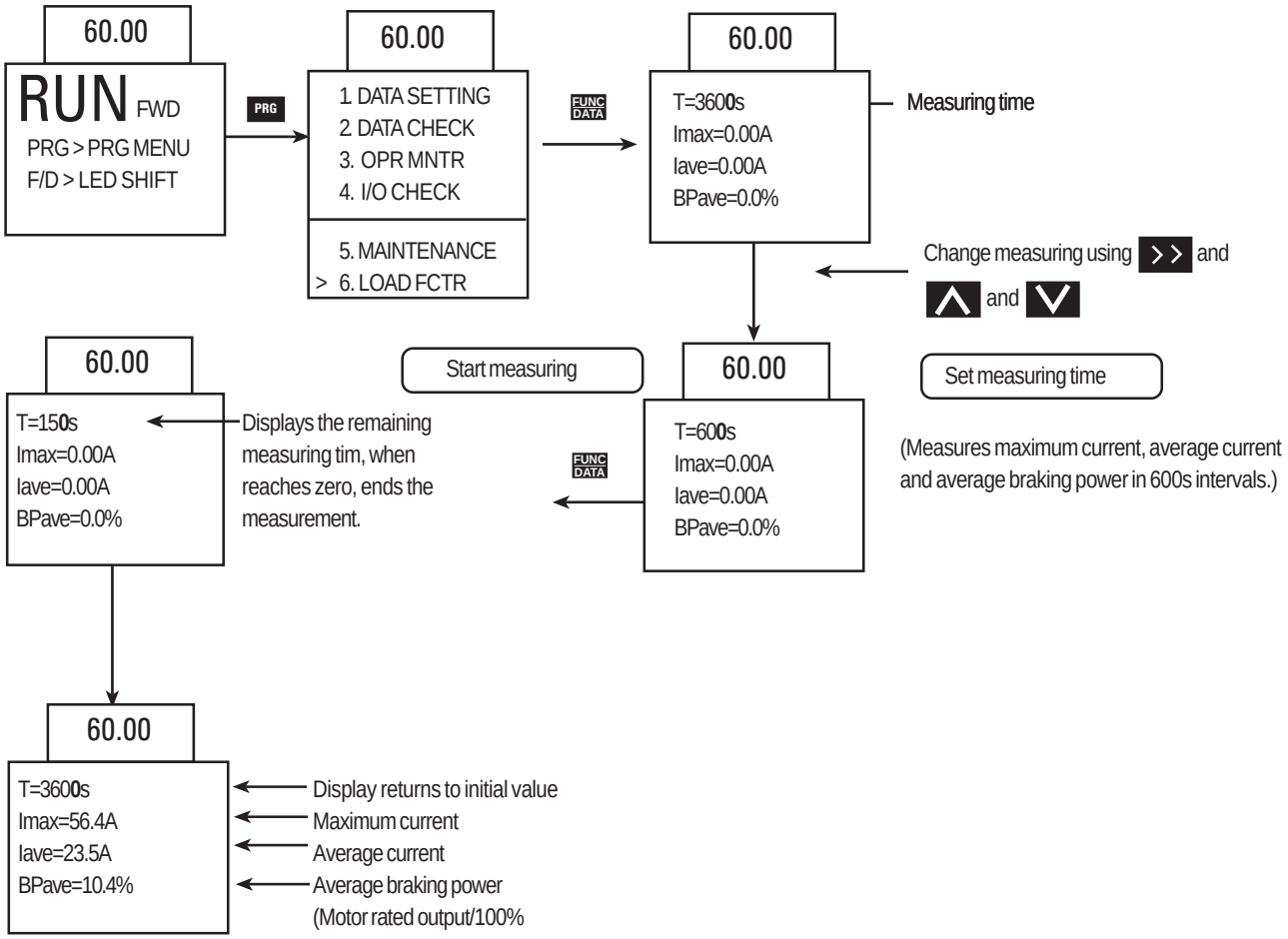

4.3.11 Alarm Information

Select 7. Alarm Information (ALM INF) on the Program Menu screen. A variety of operating data at the time the latest alarm occurred is displayed. Use UP and DOWN to switch between the nine screens of alarm information data.

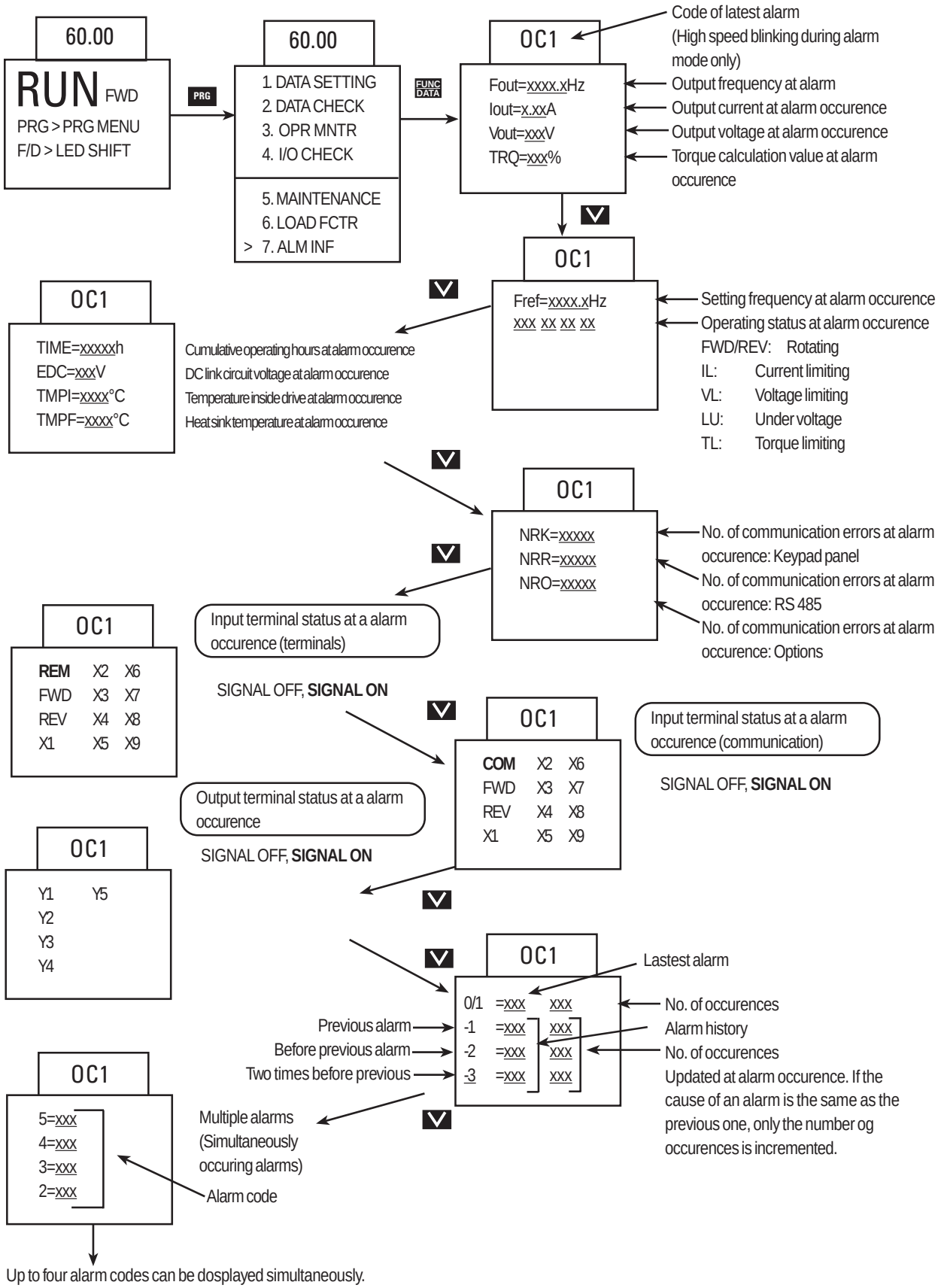

4.3.12 Alarm History and Factors

Select 8. Alarm Cause on the Program Menu screen, to display the alarm history.

Press FUNC/DATA to display troubleshooting information for the alarm selected.

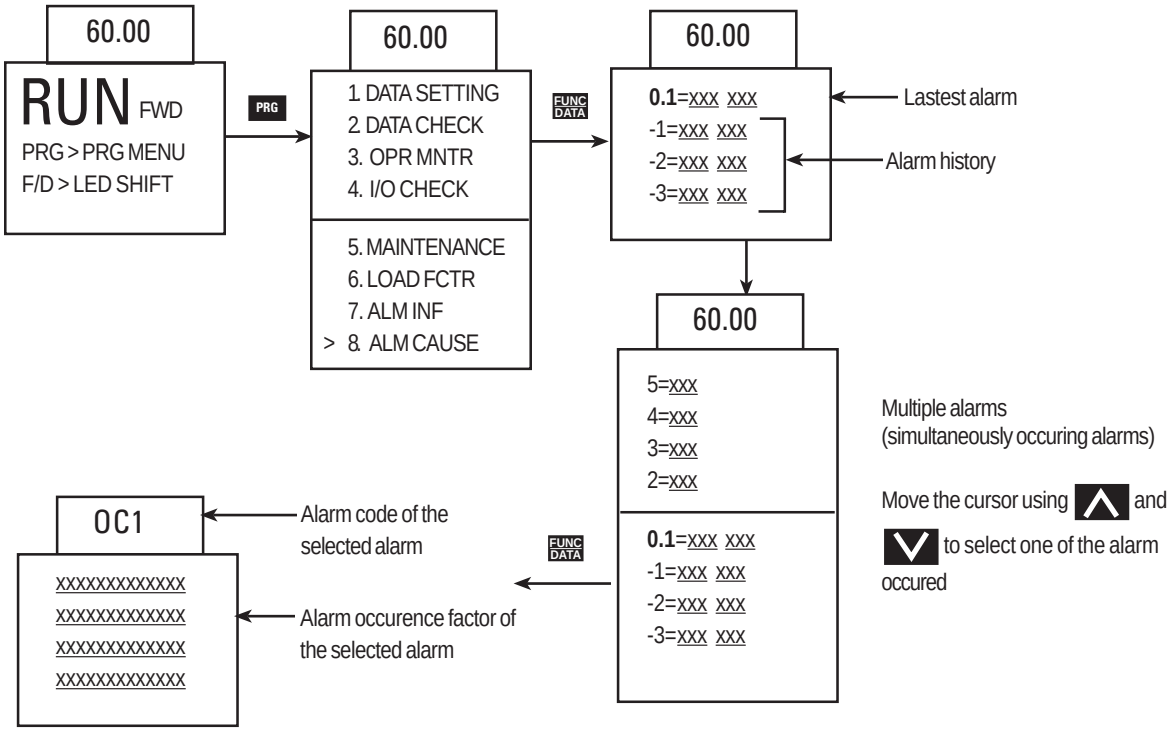

4.3.13 Data Copy

Select 9. Data Copy to display the Data Copy on the Program Menu screen. Read screen. A copy operation is then performed in the following order: function data is read from the first inverter, the keypad panel is removed and attached to a second inverter, the data from the first inverter is written to and stored in the second inverter.

The "verify" feature also makes it possible to compare and check differences in the data stored in the keypad panel and the data stored in the inverter.

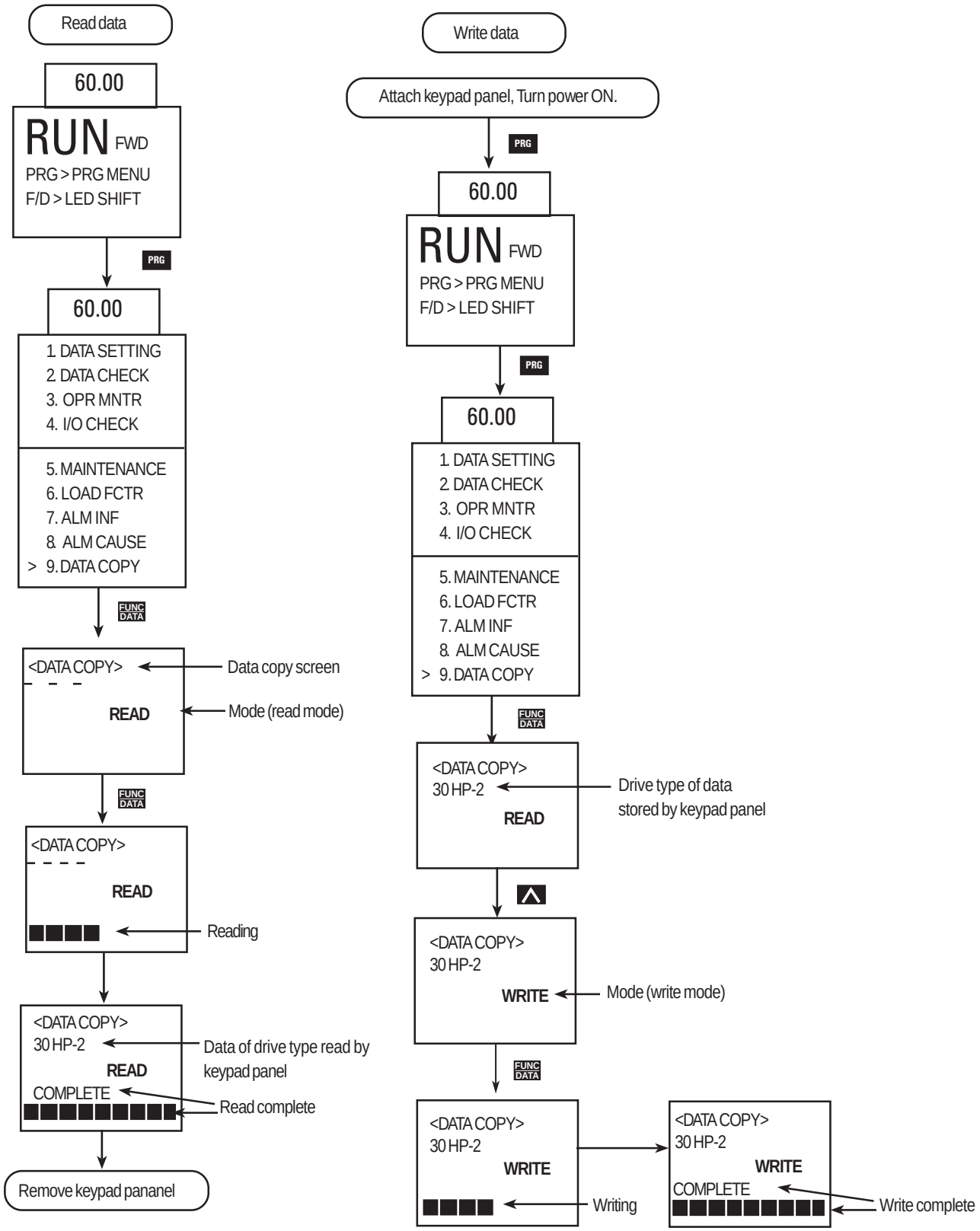

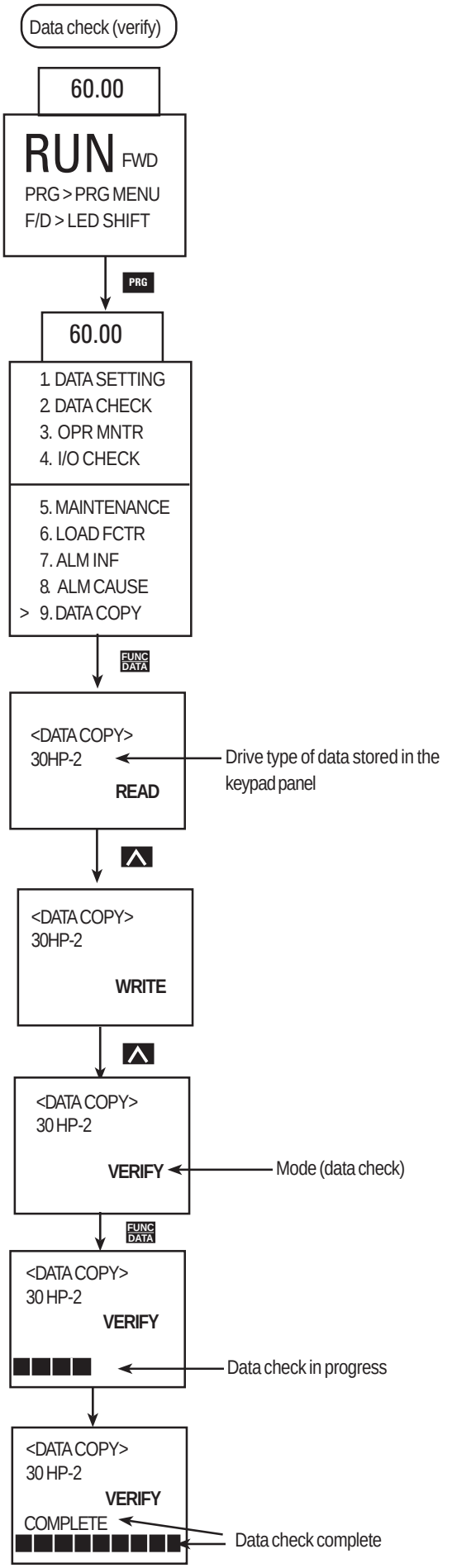

Error processing

1. Change disabled during operation

If a write operation is attempted during a drive operation, or vice versa, the error message below will appear. After stopping the drive and pressing **RESET** retry the write operation.

<DATA COPY>
30HP-2
WRITE
INV RUNNING

2. Memory error

If a write operation is attempted while data has not been saved (i.e. no data) in the keypad panel data memory during the read mode or when the drive type of data read by keypad panel is different from the drive type to which data is to be written, the following error message will appear.

<DATA COPY>
WRITE
MEMORY ERROR

3. Verify error

During a data check (verify) operation, if data stored in the keypad panel differs from data stored in the drive, the following error message is displayed to indicate the function number. The data is suspended. To continue the data check and check for other mismatching data, press **FUNC DATA**. To stop the data check and switch to another operation, press **RESET**.

<DATA COPY>
50HP-2
WRITE
ERR-F25

4.3.14 Alarm Mode

If an alarm occurs, the Alarm Screen indicating the alarm contents is displayed. Use ^ and v to display alarm history and multiple alarms (if more than two alarms occur simultaneously).

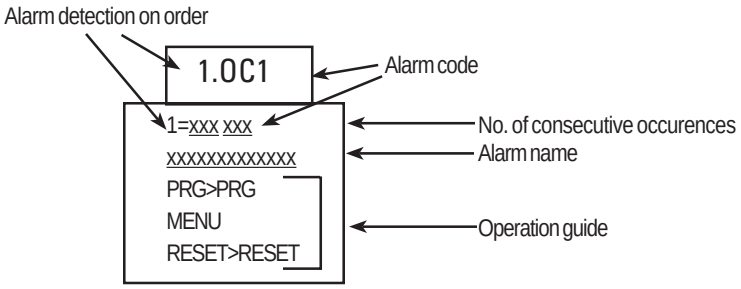

Alarm detection order

Operation method	LED display	LCD display	Description
^ v	5.	5	No. 5 alarm
	4.	4	No. 4 alarm
	3.	3	No. 3 alarm
	2.	2	No. 2 alarm
	1.	1	No. 1 alarm (more than two alarms occurred)
	Blank	0	Latest alarm (only one alarm occurred/alarm released)
	Blank	-1	Previous alarm history
	Blank	-2	Alarm history before previous alarm
	Blank	-3	Alarm history two times before previous alarm

Alarm code: See Table 6-1-1

5. Function Selection

5.1 Function Selection List

F: Fundamental Functions

Pg.	Func. No.	Name	LCD Display	Setting Range	Unit	Min.	Factory Setting 30 HP	Factory Setting 40 HP	Data Formst	Change during op
	F00	Data protection	F00 DATA PRTC	0, 1	-	-	0		1	N
5-7	F01	Frequency command 1	F01 FREQ CMD 1	0 to 11	-	-	0		1	N
	F02	Operation method	F02 OPR METHOD	0 to 4	-	-	0		1	N
	F03	Maximum frequency 1	F03 MAX Hz-1	50 to 120Hz	Hz	1	60		1	N
	F04	Base frequency 1	F04 BASE Hz-1	25 to 120Hz	Hz	1	60		1	N
5-10	F05	Rated voltage 1 (at Base frequency 1)	F05 RATED V-1	0V: (Output voltage proportional to source voltage) 230V class: 80 to 240V 460V class: 320 to 480V	V	1	230: (230V class) 460: (460V class)		1	N
	F06	Maximum voltage 1 (at Maximum frequency 1)	F06 MAX V-1	230V class: 80 to 240V 460V class: 320 to 480V	V	1	230: (230V class) 460: (460V class)		1	N
	F07	Acceleration time 1	F07 ACC TIME1	0.01 to 3600 s	s	0.01	6.0	20.0	12	Y
	F08	Deceleration time 1	F08 DEC TIME1							
	F09	Torque boost 1	F09 TRQ BOOST1	0.0, 0.1 to 20.0	-	0.1	2.0		12	Y
	F10	Electronic (Select)	F10 ELCTRN OL1	0, 1, 2	-	-	1		3	Y
	F11	Thermal 1 (level)	F11 OL LEVEL1	20 to 135% of drive rated current	A	0.01	Motor rated current		1	Y
5-11	F12	(time constant)	F12 TIME CNST1	0.5 to 75.0 min	min	0.1	5.0	10.0	19	Y
	F13	Electronic thermal overload relay (for braking resistor)	F13 DBR OL	[Up to 15 HP] 0, 1, 2	-	-	1		3	Y
				[20 HP and above] 0			0			
5-12	F14	Restart mode after momentary power failure	F14 RESTART	0 to 5	-	-	0		1	N
	F15	Frequency (high)	F15 H LIMITER	0 to 120 Hz	Hz	1	70		1	Y
	F16	Limiter (low)	F16 L LIMITER				0		1	N
	F17	Gain (for frequency set signal)	F17 FREQ GAIN	0.0 to 200.0%	%	0.1	100.0		1	Y
5-14	F18	Bias frequency	F18 FREQ BIAS	-120.0 to +120.0 Hz	Hz	0.1	0.0		1	Y
	F20	DC brake (starting frequency)	F20 DC BRK Hz	0.0 to 60.0 Hz	Hz	0.1	0.0		3	Y
	F21	(braking level)	F21 DC BRK LVL	0 to 80%	%	1	0		1	
	F22	(braking time)	F22 DC BRK t	0.0s (inactive)	s	0.1	0.0		3	
	F23	Starting frequency	F23 START Hz	0.1 to 60.0 Hz	Hz	0.1	0.5		3	N
	F24	(holding time)	F24 HOLDING t	0.0 to 10.0 s	s	0.1	0.0		3	
	F25	Stop frequency	F25 STOP Hz	0.1 to 6.0 Hz	Hz	0.1	0.2		1	
5-15	F26	Motor sound (carrier freq.)	F26 MTR SOUND	0.75 to 15 kHz (6kHz)	kHz	1	2		1	Y
	F27	(sound tone)	F27 SOUND TONE	0 to 3	-	-	0		1	Y
	F30	FMA (voltage adjust)	F30 FMA V-ADJ	0 to 200%	%	1	100		1	Y
	F31	(function)	F31 FMA FUNC	0 to 10	-	-	0		1	Y
	F33	FMP (pulse rate)	F33 FMP PULSES	300 to 6000 p/s (full scale)	p/s	1	1440		1	Y
	F34	(voltage adjust)	F34 FMP V-ADJ	0%, 1 to 200%	%	1	0		1	Y
5-16	F35	(function)	F35 FMP FUNC	0 to 10	-	-	0		1	Y
	F36	30RY operation mode	F36 30RY MODE	0, 1	-	-	0		1	Y
	F40	Torque limiter1 (driving)	F40 DRV TRQ 1	20 to 150%, 999	%	1	999		1	Y
	F41	(braking)	F41 BRK TRQ 1	0%, 20 to 150%, 999			999		1	
5-17	F42	Torque vector control 1	F42 TRQVECTOR1	0, 1	-	-	0		1	N

E: Terminal Extensions Functions

Pg.	Func. No.	Name	LCD Display	Setting Range	Unit	Min.	Factory Setting 30 HP	Factory Setting 40 HP	Data Format	Change During op
5-18/21	E01	X1 terminal function	E01 X1 FUNC	0 to 32	-	-	0		1	N
	E02	X2 terminal function	E02 X2 FUNC				1		1	N
	E03	X3 terminal function	E03 X3 FUNC				2		1	N
	E04	X4 terminal function	E04 X4 FUNC				3		1	N
	E05	X5 terminal function	E05 X5 FUNC				4		1	N
	E06	X6 terminal function	E06 X6 FUNC				5		1	N
	E07	X7 terminal function	E07 X7 FUNC				6		1	N
	E08	X8 terminal function	E08 X8 FUNC				7		1	N
	E09	X9 terminal function	E09 X9 FUNC				8		1	N
5-22	E10	Acceleration time 2	E10 ACC TIME2	0.01 to 3600 s	s	0.01	6.00	20.00	12	Y
	E11	Deceleration time 2	E11 DEC TIME2				6.00	20.00	12	Y
	E12	Acceleration time 3	E12 ACC TIME3				6.00	20.00	12	Y
	E13	Deceleration time 3	E13 DEC TIME3				6.00	20.00	12	Y
	E14	Acceleration time 4	E14 ACC TIME4				6.00	20.00	12	Y
	E15	Deceleration time 4	E15 DEC TIME4				6.00	20.00	12	Y
	E16	Torque limiter 2 (driving)	E16 DRV TRQ 2	20 to 150%, 999	%	1	999		1	Y
	E17	(braking)	E17 BRK TRQ 2	0%, 20 to 150%, 999	%	1	999		1	Y
5-22/24	E20	Y1 terminal function	E20 Y1 FUNC	0 to 33	-	-	0		1	N
	E21	Y2 terminal function	E21 Y2 FUNC				1		1	N
	E22	Y3 terminal function	E22 Y3 FUNC				2		1	N
	E23	Y4 terminal function	E23 Y4 FUNC				7		1	N
	E24	Y5A, Y5C terminal function	E24 Y5 FUNC				10		1	N
5-24	E25	Y5 RY operation mode	E25 Y5RY MODE	0,1	-	1	0		1	N
5-25	E30	FAR function (Hysteresis)	E30 FAR HYSTR	0.0 to 10.0 Hz	Hz	0.1	2.5		3	Y
	E31	FDT function (level)	E31 FDT1 LEVEL	0 to120 Hz	Hz	1	60		1	Y
	E32	signal (Hysteresis)	E32 FDT1 HYSTR	0.0 to 30.0 Hz	Hz	0.1	1.0		3	
	E33	OL function (mode select)	E33 OL1 WARNING	0: Thermal calculation 1: Output current	-	-	0		1	Y
	E34	signal (l (level)	E34 OL1 LEVEL	5 to 150% of rated drive current	A	0.01	motor rated current		19	
	E35	(timer)	E35 OL1 TIMER	0.1 to 60.0 s	s	0.1	10.0		3	
	E36	FDT2 function (level)	E36 FDT2 LEVEL	0 to 120 Hz	Hz	1	60		1	Y
	E37	OL2 function (level)	E37 OL2 LEVEL	5 to 150% of rated drive current	A	0.01	motor rated current		19	
5-26	E40	Display coefficient A	E40 COEF A	-999.00 to 999.00	-	0.01	0.01		12	
	E41	Display coefficient B	E41 COEF B	-999.00 to 999.00	-	0.01	0.00		12	Y
	E42	LED Display filter	E42 DISPLAY FL	0.0 to 5.0 s	s	0.1	0.5		3	Y
	E43	LED Monitor (function)	E43 LED MNTR	0 to 12	-	-	0		1	Y
	E44	(display in STOP mode)	E44 LED MNTR2	0, 1	-	-	0		1	Y
5-27	E45	LCD Monitor (function)	E45 LCD MNTR	0, 1	-	-	0		1	Y
	E46	(language)	E46 LANGUAGE	0 to 5	-	-	1		1	Y
	E47	(contrast)	E47 CONTRAST	0(soft) to 10(hard)	-	-	5		1	Y

C:Frequency Control Functions

5-28	C01	Jump (Jump freq. 1)	C01 JUMP Hz 1	0 to 120 Hz	Hz	1	0		1	Y
	C02	frequency (Jump freq. 2)	C02 JUMP Hz 2				0		1	
	C03	(Jump freq. 3)	C03 JUMP Hz 3				0		1	
	C04	(Hysteresis)	C04 JUMP HYSTR	0 to 30 Hz	Hz	1	3		1	
	C05	Multistep (Freq. 1)	C05 MULTI Hz-1	0.00 to 120.00 Hz	Hz	0.01	0.00		5	Y
	C06	frequency (Freq. 2)	C06 MULTI Hz-2				0.00		5	
	C07	setting (Freq. 3)	C07 MULTI Hz-3				0.00		5	
	C08	(Freq. 4)	C08 MULTI Hz-4				0.00		5	
	C09	(Freq. 5)	C09 MULTI Hz-5				0.00		5	
	C10	(Freq. 6)	C10 MULTI Hz-6				0.00		5	
	C11	(Freq. 7)	C11 MULTI Hz-7				0.00		5	
	C12	(Freq. 8)	C12 MULTI Hz-8				0.00		5	
	C13	(Freq. 9)	C13 MULTI Hz-9				0.00		5	
	C14	(Freq. 10)	C14 MULTI Hz-10				0.00		5	
	C15	(Freq. 11)	C15 MULTI Hz-11				0.00		5	
	C16	(Freq. 12)	C16 MULTI Hz-12				0.00		5	
	C17	(Freq. 13)	C17 MULTI Hz-13				0.00		5	
	C18	(Freq. 14)	C18 MULTI Hz-14				0.00		5	
	C19	(Freq. 15)	C19 MULTI Hz-15				0.00		5	

Pg.	Func. No.	Name	LCD Display	Setting Range	Unit	Min.	Factory Setting 30 HP	Factory Setting 40 HP	Data Format	Change during op
	C20	JOG frequency	C20 JOG Hz	0.00 to 120.00 Hz	Hz	0.01	5.00		5	Y
5-29	C21	PATTERN (mode select) operation	C21 PATTERN	0,1,2	-	-	0		1	N
	C22	(Stage 1)	C22 STAGE 1	Operation time: 0.00 to 6000 s	s	0.01	0.00 F1		13	
	C23	(Stage 2)	C23 STAGE 2	F1 to F4 and R1 to R4			0.00 F1		13	
	C24	(Stage 3)	C24 STAGE 3				0.00 F1		13	
5-29/30	C25	(Stage 4)	C25 STAGE 4				0.00 F1		13	Y
	C26	(Stage 5)	C26 STAGE 5				0.00 F1		13	
	C27	(Stage 6)	C27 STAGE 6				0.00 F1		13	
	C28	(Stage 7)	C28 STAGE 7				0.00 F1		13	
	C30	Frequency command 2	C30 FREQ CMD 2	0 to 11	-	-	2		1	N
5-30	C31	Offset adjust (terminal [12])	C31 BIAS 12	-100.0 to +100.0%	%	0.1	0.0		4	Y
	C32	(terminal [C1])	C32 GAIN 12	0.0 to +200.0%	%	0.1	100.0		3	Y
5-31	C33	Analog setting signal filter	C33 REF FILTER	0.00 to 5.00s	s	0.01	0.05		5	Y
P:Motor Parameters										
	P01	Number of motor 1 poles	P01 M1 POLES	2 to 14	-	2	4		9	N
5-32	P02	Motor 1 (capacity)	P02 M1-CAP	Up to 30 HP: 0.01 to 60 HP 40 HP and above: 0.01 to 600 HP	Hp	0.01	motor capacity		5	N
	P03	(rated current)	P03 M1-Ir	0.00 to 2000 A	A	0.01	motor rated current		19	N
	P04	(tuning)	P04 M1 TUN1	0, 1, 2	-	-	0		21	N
	P05	(on-line tuning)	P05 M1 TUN2	0, 1	-	-	0		1	N
	P06	(no-load current)	P06 M1-Io	0.00 to 2000 A	A	0.01	standard rated value		19	N
5-33	P07	(%R1 setting)	P07 M1-%R1	0.00 to 50.00%	%	0.01	standard rated value		5	Y
	P08	(%X setting)	P08 M1-%X	0.00 to 50.00%	%	0.01	standard rated value		5	Y
	P09	Slip compensation control	P09 SLIP COMP1	0.00 to 15.00 Hz	Hz	0.01	0.00		5	Y
H:High Performance Functions										
	H03	Data initializing	H03 DATA INIT	0, 1	-	-	0		1	N
	H04	Auto-reset (times)	H04 AUTO-RESET	0, 1 to 10 times	-	1	0		1	Y
5-34	H05	(reset interval)	H05 RESET INT	2 to 20 s	s	1	5		1	Y
	H06	Fan stop operation	H06 FAN STOP	0, 1	-	-	0		1	Y
	H07	ACC/DEC pattern (mode select)	H07 ACC PTN	0,1,2,3	-	-	0		1	N
5-35	H08	Rev. phase sequence lock	H08 REV LOCK	0, 1	-	-	0		1	N
	H09	Start mode	H09 START MODE	0, 1, 2	-	--	0		1	N
	H10	Energy-saving operation	H10 ENERGY SAV	0, 1	-	-	1		1	Y
	H11	DEC mode	H11 DEC MODE	0, 1	-	-	0		1	Y
	H12	Instantaneous OC limiting	H12 INST CL	0, 1	-	-	1		1	N
5-36	H13	Auto-restart (restart time)	H13 RESTART t	0.1 to 10.0 s	s	0.1	0.1	0.5	3	N
	H14	(freq. fall rate)	H14 FALL RATE	0.00 to 100.00 Hz/s	Hz/s	0.01	10.00		5	
	H15	(holding DC voltage)	H15 HOLD V	3-phase, 230V class: 200 to 300V 3-phase, 460V class: 400 to 600V	V	1	200V class: 235V 400V class: 470V		1	Y
	H16	(OPR command self hold time)	H16 SELFHOLD t	0.0 to 30.0 s, 999	s	0.1	999		3	N
5-37	H19	Active drive	H19 AUT RED	0, 1	-	-	0		1	Y
	H20	PID control (mode select)	H20 PID MODE	0, 1, 2	--	-	0		1	N
5-38	H21	(feedback signal)	H21 FB SIGNAL	0, 1, 2, 3	-	-	1		1	N
	H22	(P-gain)	H22 P-GAIN	0.01 to 10.00 times	-	0.01	0.1		5	Y
5-39/40	H23	(I-gain)	H23 I-GAIN	0.0, 0.1 to 3600 s	s	0.1	0.0		3	Y
	H24	(D-gain)	H24 D-GAIN	0.00 s , 0.01 to 10.0 s	s	0.01	0.00		5	Y
	H25	(feedback filter)	H25 FB FILTER	0.0 to 60.0 s	s	0.1	0.5		3	Y
5-41	H26	PTC thermistor (mode select)	H26 PTC MODE	0, 1			0		1	Y
	H27	(level)	H27 PTC LEVEL	0.00 to 5.00V	V	0.01	1.60		5	Y
	H30	Serial link (function select)	H30 LINK FUNC	0, 1, 2, 3	-	-	0		1	Y
	H31	Modbus-RTU (address)	H31 ADDRESS	0 (broadcast), 1 to 247	-	1	1		1	N
	H32	(mode select on no response error)	H32 MODE ON ER	0, 1, 2, 3	-	-	0		1	Y
5-42	H33	(timer)	H33 TIMER	0.0 to 60.0 s	s	-	2.0		3	Y
	H34	(baud rate)	H34 BAUD RATE	0, 1, 2, 3	-	-	1		1	Y
	H35	(data length)	H35 LENGTH	0 (8-bit fixed)	-	-	0		1	Y
	H36	(parity check)	H36 PARITY	0, 1, 2	-	-	0		1	Y
	H37	(stop bits)	H37 STOP BITS	0 (2-bit), 1(1-bit)	-	-	0		1	Y
5-43	H38	(no response error detection time)	H38 NO RES t	0 (no detection), 1 to 60 s	s	1	0		1	Y
	H39	(response interval)	H39 INTERVAL	0.00 to 1.00 s	s	0.01	0.01		5	Y

A: Alternative Motor Parameters

Pg.	Func. No.	Name	LCD Display		Setting Range	Unit	Factory Setting Min.	Factory Setting 30 HP	Factory Setting 40 HP	Data Format	Change During op
	A01	Maximum frequency 2	A01	MAX Hz-2	50 to 120 Hz	Hz	1	60		1	N
	A02	Base frequency 2	A02	BASE Hz-2	25 to 120 Hz	Hz	1	60		1	N
	A03	Rated voltage 2 (at Base frequency 2)	A03	RATED V-2	0 230V class: 80 to 240V 460V class: 320 to 480V	V	1	230V class: 230 460V class: 460		1	N
	A04	Maximum voltage 2	A04	MAX V-2	230V class: 80 to 240V 460V class: 320 to 480V	V	1	230V class: 230 460V class: 460		1	N
5-44	A05	Torque boost 2	A05	TRQ BOOST2	0.0, 0.1 to 20.0	-	-	2.0		3	Y
	A06	Electronic (select)	A06	ELCTRN OL2	0, 1, 2	-	-	1		1	Y
	A07	thermal 2 (level)	A07	OL LEVEL2	20% to 135% if INV rated current	A	0.01	motor rated current		19	Y
	A08	(thermal time constant)	A08	TIME CNST2	0.5 to 75.0 min	min	0.1	5.0	10.0	3	Y
	A09	Torque vector control 2	A09	TRQVECTOR2	0, 1	-	-	0		1	N
	A10	Number of motor 2 poles	A10	M2 POLES	2 to 14 poles	pole	2	4		9	N
	A11	Motor 2 (capacity)	A11	M2-CAP	Up to 30 HP: 0.01 to 60 HP 40 HP and above: 0.01 to 600 HP	HP	0.01	motor capacity		5	N
	A12	(rated current)	A12	M2-Ir	0.00 to 2000 A	A	0.01	motor rated current		19	N
	A13	(tuning)	A13	M2 TUN1	0, 1, 2	-	-	0		21	N
	A14	(on-line tuning)	A14	M2 TUN2	0, 1	-	-	0		1	N
5-45	A15	(no-load current)	A15	M2-Io	0.00 to 2000 A	A	0.01	standard rated value		19	N
	A16	(%R1 setting)	A16	M2-%R1	0.00 to 50.00%	%	0.01	standard rated value		5	Y
	A17	(%X setting)	A17	M2-%X	0.00 to 50.00%	%	0.01	standard rated value		5	Y
	A18	(slip compensation control 2)	A18	SLIP COMP2	0.00 to 15.00 Hz	Hz	0.01	0.00		5	Y

5.2 Alphabetical Function List

PG.	NAME	LCD Display	
5-16	30RY operation mode	F36	30RY MODE
5-10	Acceleration time 1	F07	ACC TIME1
5-22	Acceleration time 2	E10	ACC TIME2
5-22	Acceleration time 3	E12	ACC TIME3
5-22	Acceleration time 4	E14	ACC TIME4
5-34	ACC/DEC Pattern	H07	ACC PTN
5-37	Active Drive	H19	AUT RED
5-31	Analog setting signal filter	C33	REF FILTER
5-10	Base frequency 1	F04	BASE Hz-1
5-44	Base frequency 2	A02	BASE Hz-2
5-14	Bias frequency	F18	FREQ BIAS
5-34	Data initializing	H03	DATA INIT
5-7	Data protection	F00	DATA PRTC
5-14	DC brake (Braking level)	F21	DC BRK LVL
5-14	DC brake (Braking time)	F22	DC BRK t
5-14	DC brake (Starting freq.)	F20	DC BRK Hz
5-36	DEC mode	H11	DEC MODE
5-10	Deceleration time 1	F08	DEC TIME1
5-22	Deceleration time 2	E11	DEC TIME2
5-22	Deceleration time 3	E13	DEC TIME3
5-22	Deceleration time 4	E15	DEC TIME4
5-26	Display coefficient A	E40	COEF A
5-26	Display coefficient B	E41	COEF B
5-11	Electronic Thermal 1 (Level)	F11	OL LEVEL1
5-11	Electronic Thermal 1 (Select)	F10	ELCTRN OL1
5-11	Electronic Thermal 1 (Thermal time constant)	F12	TIME CNST1
5-44	Electronic thermal 2 (Level)	A07	OL LEVEL2
5-44	Electronic thermal 2 (Select)	A06	ELCTRN OL2
5-44	Electronic thermal 2 (Thermal time constant)	A08	TIME CNST2
5-11	Electronic thermal overload relay (for DB resistor)	F13	DBR OL
5-36	Energy-saving operation	H10	ENERGY SAV
5-34	Fan stop operation	H06	FAN STOP
5-25	FAR function (Hysteresis)	E30	FAR HYSTR
5-25	FDT function (Level)	E31	FDT1 LEVEL
5-25	FDT signal (Hysteresis)	E32	FDT1 HYSTR
5-25	FDT2 function (Level)	E36	FDT2 LEVEL
5-15	FMA (Voltage adjust)	F30	FMA V-ADJ
5-15	FMA (Function)	F31	FMA FUNC
5-16	FMP (Function)	F35	FMP FUNC
5-16	FMP (Pulse rate)	F33	FMP PULSES
5-16	FMP (Voltage adjust)	F34	FMP V-ADJ
5-7	Frequency command 1	F01	FREQ CMD 1
5-30	Frequency command 2	C30	FREQ CMD 2
5-14	Frequency limiter (High)	F15	H LIMITER
5-14	Frequency limiter (Low)	F16	L LIMITER
5-14	Gain (for freq set signal)	F17	FREQ GAIN
5-36	Instantaneous OC limiting	H12	INST CL
5-29	JOG frequency	C20	JOG Hz
5-28	Jump frequency (Hysteresis)	C04	JUMP HYSTR
5-28	Jump frequency (Jump freq 1)	C01	JUMP Hz 1
5-28	Jump frequency (Jump freq 2)	C02	JUMP Hz 2
5-28	Jump frequency (Jump freq 3)	C03	JUMP Hz 3
5-27	LCD Monitor (Contrast)	E47	CONTRAST
5-27	LCD Monitor (Function)	E45	LCD MNTR
5-27	LCD Monitor (Language)	E46	LANGUAGE
5-26	LED Display filter	E42	DISPLAY FL
5-26	LED Monitor (Function)	E43	LED MNTR
5-26	LED Monitor (Display @ STOP mode)	E44	LED MNTR2
5-10	Maximum frequency 1	F03	MAX Hz-1
5-44	Maximum frequency 2	A01	MAX Hz-2
5-10	Maximum voltage 1	F06	MAX V-1
5-44	Maximum voltage 2	A04	MAX V-2
5-42	Modbus-RTU (Address)	H31	ADDRESS
5-42	Modbus-RTU (Baud rate)	H34	BAUD RATE
5-42	Modbus-RTU (Data length)	H35	LENGTH
5-42	Modbus-RTU (Mode select on no response error)	H32	MODE ON ER
5-43	Modbus-RTU (No response error detection time)	H38	NO RES t
5-42	Modbus-RTU (Parity check)	H36	PARITY
5-43	Modbus-RTU (Response interval)	H39	INTERVAL
5-42	Modbus-RTU (Stop bits)	H37	STOP BITS
5-42	Modbus-RTU (Timer)	H33	TIMER
5-33	Motor 1 (%R1 setting)	P07	M1-%R1
5-33	Motor 1 (%X setting)	P08	M1-%X
5-32	Motor 1 (Capacity)	P02	M1 -CAP
5-33	Motor 1 (No-load current)	P06	M1-Io
5-33	Motor 1 (On-line Tuning)	P05	M1 TUN2
5-32	Motor 1 (Rated current)	P03	M1-Ir
5-32	Motor 1 (Tuning)	P04	M1 TUN1
5-45	Motor 2 (%R1 setting)	A16	M2-%R1
5-45	Motor 2 (%X setting)	A17	M2-%X
5-44	Motor 2 (Capacity)	A11	M2-CAP
5-45	Motor 2 (No-load current)	A15	M2-Io
5-45	Motor 2 (On-line Tuning)	A14	M2 TUN2
5-44	Motor 2 (Rated current)	A12	M2-Ir
5-45	Motor 2 (Slip compensation control 2)	A18	SLIP COMP2
5-45	Motor 2 (Tuning)	A13	M2 TUN1
5-15	Motor sound (Carrier freq.)	F26	MTR SOUND
5-15	Motor sound (Sound tone)	F27	SOUND TONE
5-28	Multistep frequency setting (Freq. 1)	C05	MULTI Hz-1
5-28	Multistep frequency setting (Freq. 2)	C06	MULTI Hz-2
5-28	Multistep frequency setting (Freq. 3)	C07	MULTI Hz-3
5-28	Multistep frequency setting (Freq. 4)	C08	MULTI Hz-4
5-28	Multistep frequency setting (Freq. 5)	C09	MULTI Hz-5
5-28	Multistep frequency setting (Freq. 6)	C10	MULTI Hz-6
5-28	Multistep frequency setting (Freq. 7)	C11	MULTI Hz-7
5-28	Multistep frequency setting (Freq. 8)	C12	MULTI Hz-8
5-28	Multistep frequency setting (Freq. 9)	C13	MULTI Hz-9
5-28	Multistep frequency setting (Freq.10)	C14	MULTI Hz-10
5-28	Multistep frequency setting (Freq.11)	C15	MULTI Hz-11
5-28	Multistep frequency setting (Freq.12)	C16	MULTI Hz-12
5-28	Multistep frequency setting (Freq.13)	C17	MULTI Hz-13
5-28	Multistep frequency setting (Freq.14)	C18	MULTI Hz-14
5-28	Multistep frequency setting (Freq.15)	C19	MULTI Hz-15

5.2 Alphabetical Function List (continued)

PG.	NAME	LCD Display	
5-32	Number of motor 1 poles	P01	M1 POLES
5-44	Number of motor 2 poles	A10	M2 POLES
5-30	Offset adjust (terminal [12])	C31	BIAS 12
5-30	Offset adjust (terminal [C1])	C32	GAIN 12
5-25	OL function (Mode select)	E33	OL1 WARNING
5-25	OL function siganl (Timer)	E35	OL1 TIMER
5-25	OL function signal (Level)	E34	OL1 LEVEL
5-25	OL2 function (Level)	E37	OL2 LEVEL
5-7	Operation method	F02	OPR METHOD
5-29	Pattern (Stage 1)	C22	STAGE 1
5-29	Pattern (Stage 2)	C23	STAGE 2
5-29	Pattern (Stage 3)	C24	STAGE 3
5-29	Pattern (Stage 4)	C25	STAGE 4
5-29	Pattern (Stage 5)	C26	STAGE 5
5-29	Pattern (Stage 6)	C27	STAGE 6
5-29	Pattern (Stage 7)	C28	STAGE 7
5-29	PATTERN operation (Mode select)	C21	PATTERN
5-39	PID control (D-gain)	H24	D-GAIN
5-41	PID control (Feedback filter)	H25	FB FILTER
5-38	PID control (Feedback signal)	H21	FB SIGNAL
5-39	PID control (I-gain)	H23	I-GAIN
5-37	PID control (Mode select)	H20	PID MODE
5-39	PID control (P-gain)	H22	P-GAIN
5-41	PTC thermistor (Level)	H27	PTC LEVEL
5-41	PTC thermistor (Mode select)	H26	PTC MODE
5-10	Rated voltage 1	F05	RATED V-1
5-44	Rated voltage 2 (at Base frequency 2)	A03	RATED V-2
5-12	Restart mode after momentary power failure	F14	RESTART
5-35	Rev. phase sequence lock	H08	REV LOCK
5-42	Serial link (Function select)	H30	LINK FUNC
5-33	Slip compensation control	P09	SLIP COMP1
5-35	Start mode	H09	START MODE
5-15	Starting frequency (Freq.)	F23	START Hz
5-15	Starting frequency (Holding time)	F24	HOLDING t
5-15	Stop frequency	F25	STOP Hz
5-11	Torque boost 1	F09	TRQ BOOST1
5-44	Torque boost 2	A05	TRQ BOOST2
5-16	Torque limiter 1 (braking)	F41	BRK TRQ 1
5-16	Torque limiter 1 (Driving)	F40	DRV TRQ 1
5-22	Torque limiter 2 (braking)	E17	BRK TRQ 2
5-22	Torque limiter 2 (Driving)	E16	DRV TRQ 2
5-177	Torque vector control 1	F42	TRQVECTOR1
5-44	Torque vector control 2	A09	TRQVECTOR2
5-18	X1 terminal function	E01	X1 FUNC
5-18	X2 terminal function	E02	X2 FUNC
5-18	X3 terminal function	E03	X3 FUNC
5-18	X4 terminal function	E04	X4 FUNC
5-18	X5 terminal function	E05	X5 FUNC
5-18	X6 terminal function	E06	X6 FUNC
5-18	X7 terminal function	E07	X7 FUNC
5-22	Y1 terminal function	E20	Y1 FUNC
5-22	Y2 terminal function	E21	Y2 FUNC
5-22	Y3 terminal function	E22	Y3 FUNC
5-22	Y4 terminal function	E23	Y4 FUNC
5-24	Y5 RY operation mode	E25	Y5RY MODE
5-22	Y5A, Y5C terminal func.	E24	Y5 FUNC

F: Fundamental Functions

F00 Data protection

F 0 0 D A T A P R T C

Setting range 0 : data can be changed
1 : data cannot be changed

This function protects the system by blocking any data changes from the keypad panel.

Setting procedure:

0 to 1: Press the STOP and ∧ keys simultaneously to change the value from 0 to 1, then press the FUNC DATA to validate the change.

1 to 0: Press the STOP and ∨ keys simultaneously to change the value from 1 to 0, then press the FUNC DATA key to validate the change.

F01 Frequency setting 1

F 0 1 F R E Q C M D 1

This function determines the method to be used for setting frequency.

NOTE: Use only one terminal - V2 or C1, exclusively.

0: Keypad operation (∨ or ∧ key)

1: Voltage input (terminal 12 and V2) (0 to +10 VDC, 0 to +5VDC)

2: Current input (terminal C1) (4 to 20 mA DC)

3: Voltage and current input (terminals 12 and C1)

4: Reversible operation with polarity (terminal 12) (0 to ± 10 VDC)

5: Reversible operation with polarity (terminal 12 and V2) (0 to ± 10 VDC)

Related functions E01 to E09 (Set values 21)

6: Inverse mode operation (terminal 12 and V2) (+10 to 0 VDC)

7: Inverse mode operation (terminal C1)(20 to 4 mA DC)

8: UP/DOWN control 1 (initial freq. = 0 Hz

9: UP/DOWN control 2 (initial freq. = last value)

Related functions E01 to E09 (Set values 17, 18)

10. PATTERN operation

Related functions: C21 to C28

11: DI option or Pulse train input

For details, see instruction manual on options.

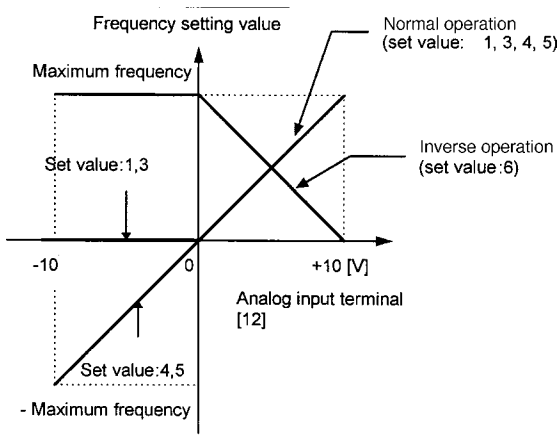

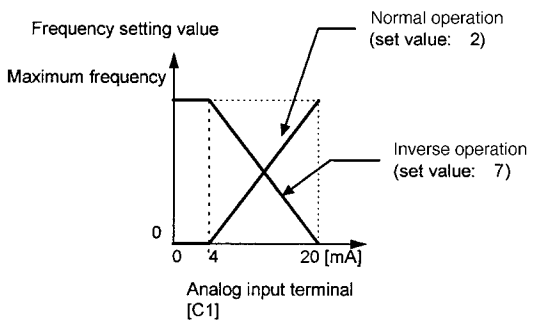

F02 Operation method

F 0 2 O P R M E T H O D

This function determines the input method for operation commands.

0: Keypad operation (FWD or REV or STOP key)

1: Terminal operation (STOP key active)

2: Terminal operation (STOP key inactive)

3: Terminal operation (STOP key active) through software

4: Terminal operation (STOP key inactive) through software

This function can only be changed when terminals FWD and REV are open.

REMOTE/LOCAL switching from the keypad panel automatically changes the set value from 0 to 3 of this function.

GE Start Software Selection During Terminal Operation

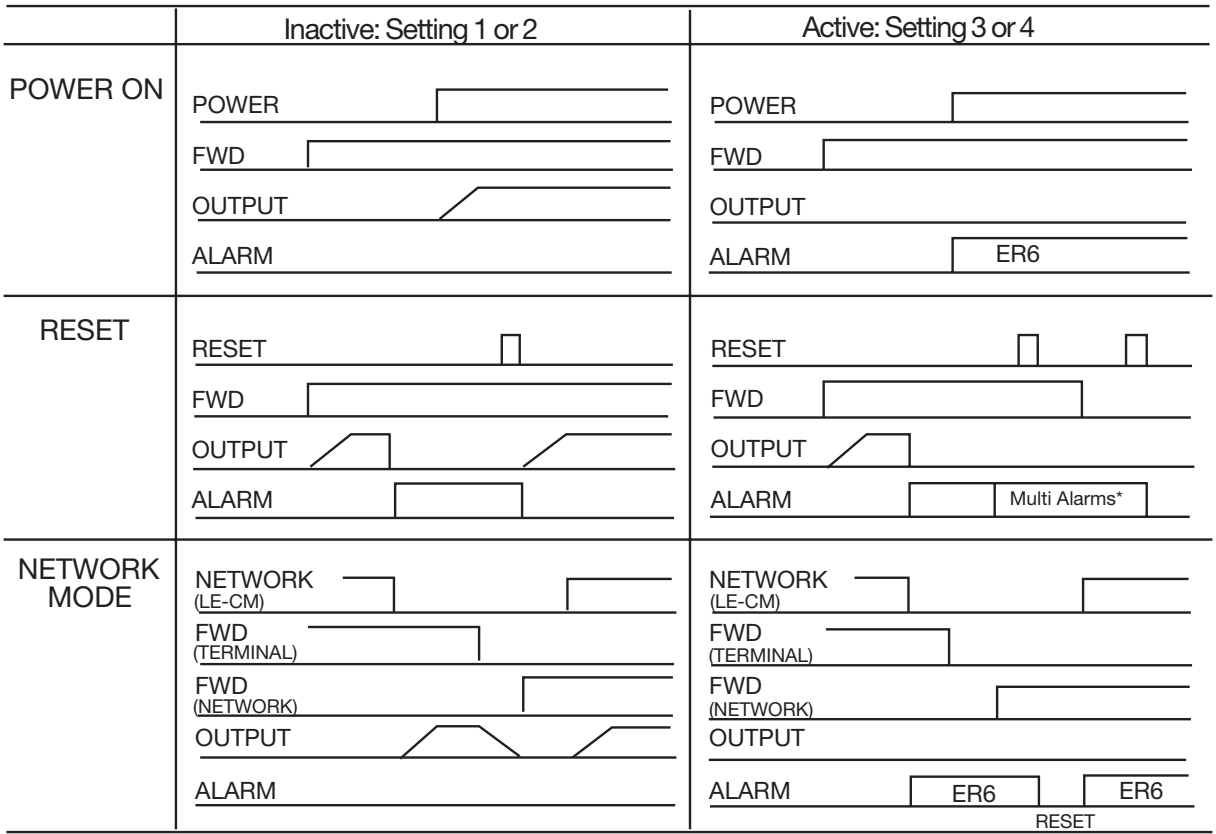

* See Alarm Mode, page 4-15.

Note: Start Software does not work at AUTO RESET mode and PROGRAMMING mode

Stop Key Mode Selection During Terminal Operation

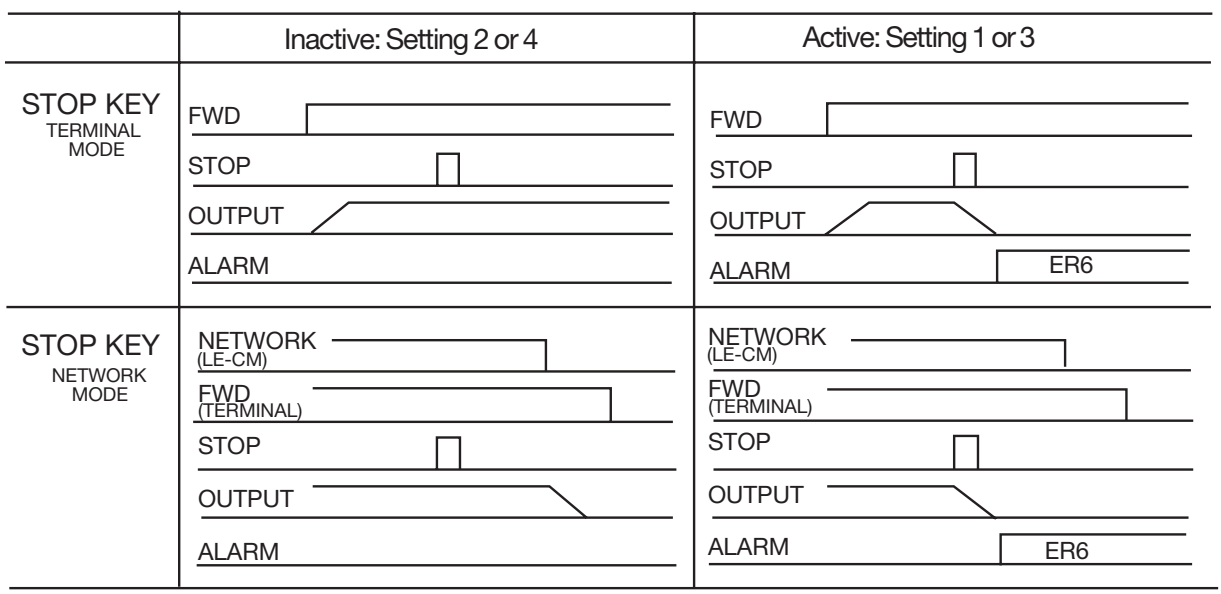

Frequency Setting Block Diagram

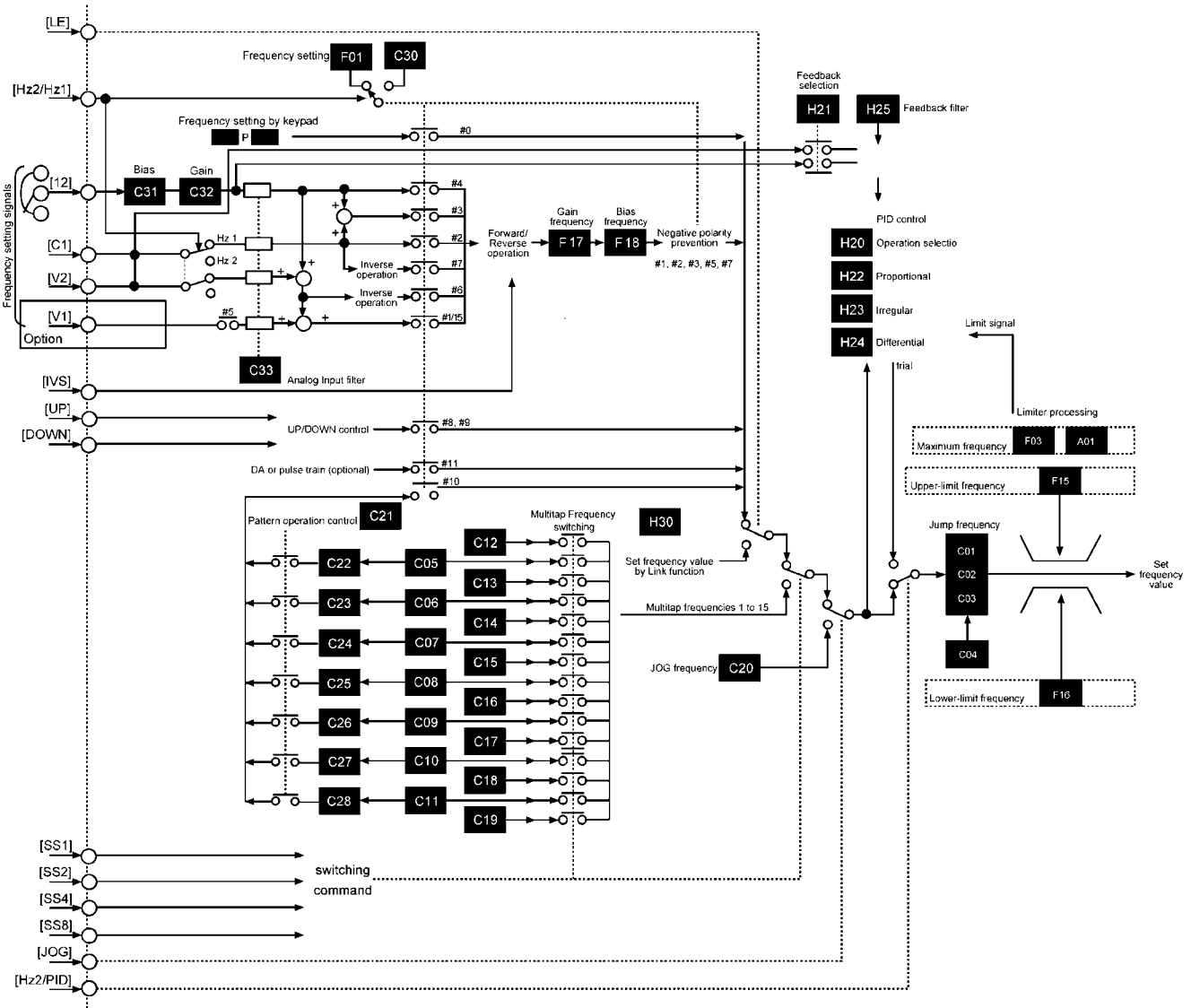

F03 Maximum output frequency 1

F	0	3	M	A	X		H	z	–	1		

Setting range 50 to 120 Hz

This function sets the maximum output frequency for Motor 1.

Setting a value higher than the rated value of the device to be driven may damage the motor or machine. Match the device rating when setting this function.

F04 Base frequency 1

F	0	4	B	A	S	E		H	z	–	1	

Setting range 25 to 120Hz

This function sets the maximum output frequency in the constant torque range of Motor 1 or the output frequency at the rated output voltage. Match the motor rating.

Note: If the value of Base frequency 1 is set higher than that of Maximum output frequency 1, the output voltage does not increase to the rated voltage. The maximum frequency limits the output frequency.

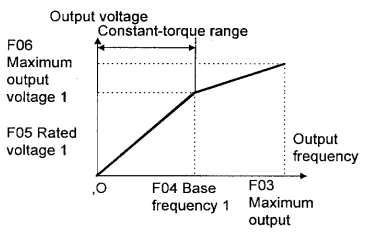

F05 Rated voltage 1

F	0	5	R	A	T	E	D		V	–	1	

Setting range 230V AC series: 0, 80 to 240V
460 V series: 0, 320 to 480V

This function sets the rated value of the voltage output to Motor 1. Note that a voltage greater than the supply (input) voltage cannot be output.

Value 0 terminates operation of the voltage regulator function, thereby resulting in the output of a voltage proportional to the supply voltage.

Note: If the value of Rated voltage 1 is set higher than Maximum output voltage 1, the output voltage does not increase to the rated voltage. The maximum output voltage limits the output voltage.

F06 Maximum output voltage 1

F	0	6	M	A	X		V	–	1			

Setting range 230 V AC series: 80 to 240 VAC
460 VAC series: 320 to 480 VAC

This function sets the maximum value of the voltage output for Motor 1. Note that a voltage higher than the supply (input) voltage cannot be output.

F07 Acceleration time 1
F08 Deceleration time 1

F	0	7	A	C	C		T	I	M	E	1	
F	0	8	D	E	C		T	I	M	E	1	

Setting range ACC TIME1: 0.01 to 3,600 seconds
DEC TIME1: 0.01 to 3,600 seconds

These functions set the acceleration time for the output frequency from startup to maximum frequency, as well as the deceleration time from maximum frequency to operation stop.

Acceleration and deceleration times are represented by the three most significant (high-order) digits.

Set acceleration and deceleration times with respect to maximum frequency. The relationship between the set frequency value and acceleration/deceleration times is as follows:

Set frequency = maximum frequency

The actual operation time matches the set value.

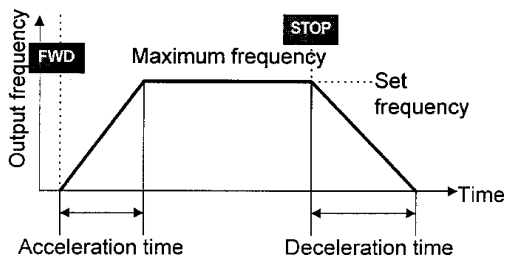

Set frequency < maximum frequency

The actual operation time differs from the set value.

Acceleration *deceleration operation time = set value x (set frequency/maximum frequency)

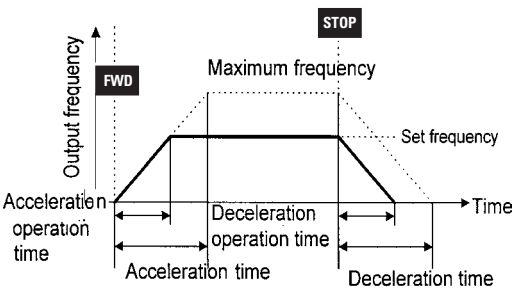

Note: If the set acceleration and deceleration times are set too low, even though the resistance torque and moment of inertia of the load are great, if the torque limiting functions or stall prevention function are activated, it prolongs the operation time beyond the set value.

F09 Torque Boost 1

F	0	9	T	R	Q		B	O	O	S	T	1

This is a Motor 1 function. The following can be selected:

Selection of load characteristics such as automatic torque boost, square law reduction torque load, proportional torque load, constant torque load.

Enhancement of torque (V/f characteristics), which is lowered during low-speed operation. Insufficient magnetic flux of the motor due to a voltage drop in the low-frequency range can be compensated.

Setting Range	Characteristics Selected
0.0	Automatic torque boost, where the torque boost value of a constant torque load (a linear change) is automatically adjusted.
0.1 to 0.9	Square law reduction torque for fan and pump loads
1.0 to 1.9	Proportional torque for middle class loads between square law reduction torque and constant torque (linear change)
2.0 to 20.0	Constant torque (linear change)

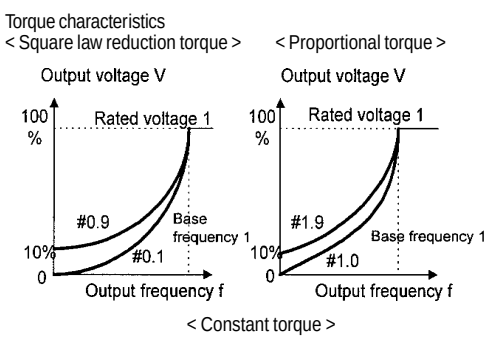

Since a large torque boost value creates over-excitation in the low-speed range, continued operation may cause the motor to overheat. Check the characteristics of the driven motor.

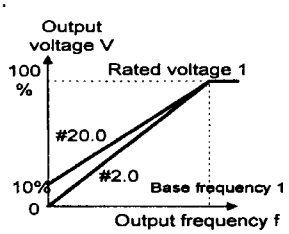

F10 Electric thermal O/L relay (operation selection)

F11 Electric thermal O/L relay (level)

F12 Electric thermal O/L relay (thermal time)

The electronic thermal O/L relay manages the output frequency, output current, and operation time of the inverter to prevent the motor from overheating when 150% of the set current value flows for the time set by F12 (thermal time constant).

F	1	0	E	L	C	T	R	N		O	L	1

Setting range
0: Inactive
1: Active (for general-purpose motor)
2: Active (for forced air motor)

This function specifies whether to operate the electronic thermal O/L relay and selects the target motor. When a general-purpose motor is selected, the operation level is lowered in the low speed range according to the cooling characteristics of the motor.

F	1	1	O	L		L	E	V	E	L	1	

The setting range is 20 to 135% of the rated drive current.

This function sets the operation level current for the electronic thermal O/L relay. Enter a value from 1 to 1.1 times the rated motor current value.

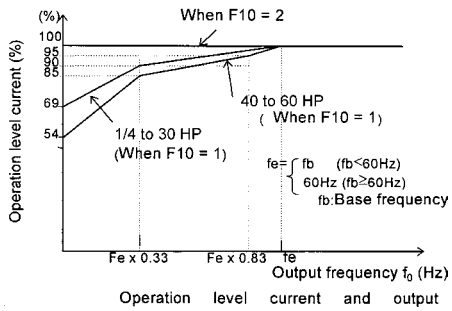

F	1	2	T	I	M	E		C	N	S	T	1

The setting range is 0.5 to 75.0 minutes (in 0.1 minute increments).

The time from when 150% of the operation level current flows continuously to when the electronic thermal O/L relay activates can be set with this function.

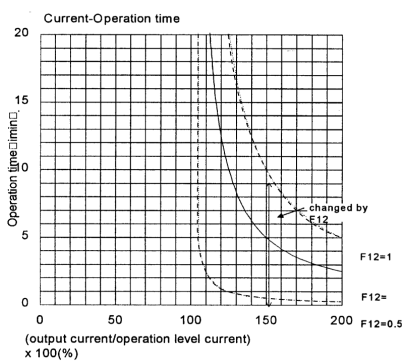

F13 Electric thermal O/L relay (for braking)

F	1	3	D	B	R		O	L				

This function controls the frequent use and continuous operating time of the braking resistor to prevent the resistor from overheating.

Drive Capacity	Operation
15 Hp or less	0: Inactive 1: Inactive 2: Active (external braking resistor)
20 Hp or more	0: Inactive

F14 Restart after momentary power failure (operation selection)

F14 RESTART

Setting range: 0 to 5

The following table lists the function details.

This function selects operation if a momentary power failure occurs.

The function for detecting power failure and activating protective operation (i.e., alarm output, alarm display, drive output cutoff) for undervoltage can be selected. The automatic restart function (for automatically restarting a coasting motor without stopping) when the supply voltage is recovered can also be selected.

Set Value	Function Name	Operation at Power Failure	Operation at Power Recovery
0	Inactive (intermediate drive trip)	If undervoltage is detected, the drive will immediately trip and an undervoltage fault (LU) is displayed. The drive output stops and the motor will coast to a stop.	The drive operation is not automatically restarted. Input a reset command and operation command to restart.
1	Inactive (drive trip at recovery)	If undervoltage is detected, the drive output stops and the motor will immediately coast to a stop. A drive fault is not activated.	An undervoltage fault (LU) is activated at power recovery. Drive operation is not automatically restarted. Input a reset command to restart operation.
2	Inactive (drive trip after deceleration to a stop at power failure)	When the DC bus voltage reaches the operation voltage level (H15), a controlled deceleration to a stop occurs. The drive collects the inertial energy of the load to maintain the DC bus voltage and controls the motor until it stops, then an undervoltage fault (LU) is activated. The drive will automatically decrease the deceleration time if necessary. If the amount of inertial energy from the load is small, and the undervoltage level is achieved before the motor stops, the undervoltage fault is immediately activated and the motor will coast to a stop.	The drive operation is not automatically restarted. Input a reset command and operation command to restart operation.
3	Active (operation ride-through; for high-inertia loads)	When the DC bus voltage reaches the operation voltage level (H15), energy is collected from the inertia of the load to maintain the DC bus voltage and extend the ride-through time. The drive will automatically adjust the deceleration rate to maintain DC bus voltage level. If undervoltage is detected, the protective function is not activated, but drive output stops and the motor coast to a stop.	Operation is automatically restarted. For power recovery during ride-through, the drive will accelerate directly to the original frequency. If undervoltage is detected, operation automatically restarts with the frequency selected at the time that the undervoltage was detected.
4	Active (restart with the frequency at the time of power failure)	If undervoltage is detected, the protective function is not activated. The drive output stops and the motor will coast to a stop.	Operation is automatically restarted with the frequency selected at the time of power failure.
5	Active (restart with start frequency; for low-inertia loads)	If undervoltage is detected, the protective function is not activated, but drive output stops.	Operation is automatically restarted with the frequency set by F23, "Starting frequency".

Note: Function codes H13 to H16 are provided to control a restart operation after momentary power failure. These functions should be understood and used. The pick-up **(speed search)** function can also be selected as a method of restarting when power is recovered after a momentary failure. (For setting details, see function code H09.) The pick-up function searches for the speed of the coasting motor to restart the motor without subjecting it to excessive shock.

In a high-inertia system, the reduction in motor speed is minimal even when the motor is coasting. A speed search time is required when the pick-up function is active. In such a case, the original frequency may be recovered sooner when the function is inactive and the operation is restarted with the frequency prior to the momentary power failure.

The pick-up function works in the range of 5 to 120 Hz. If the detected speed is outside this range, restart the motor using the regular restart function.

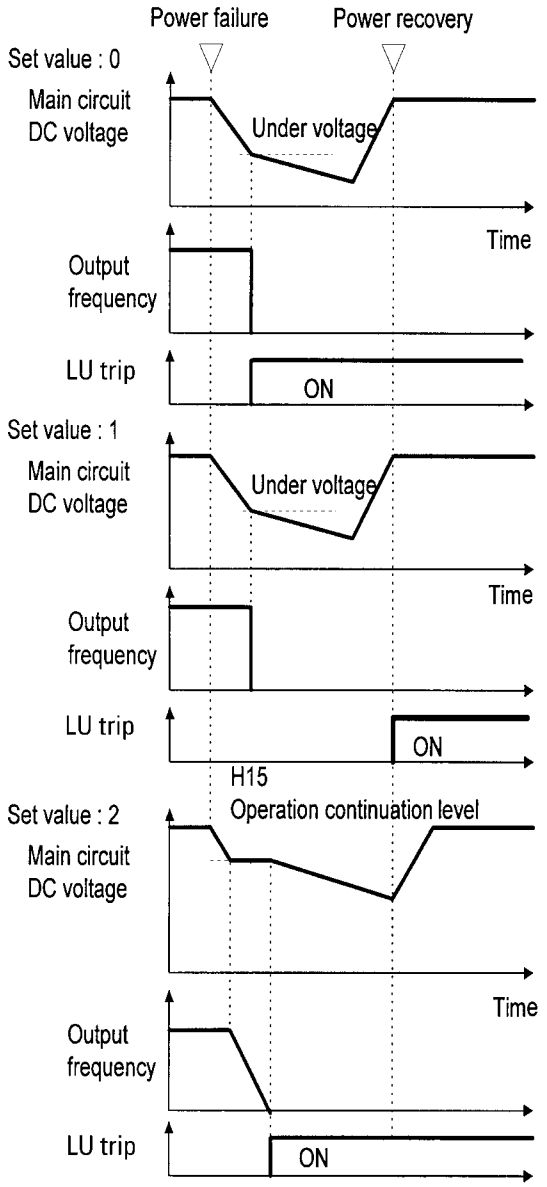

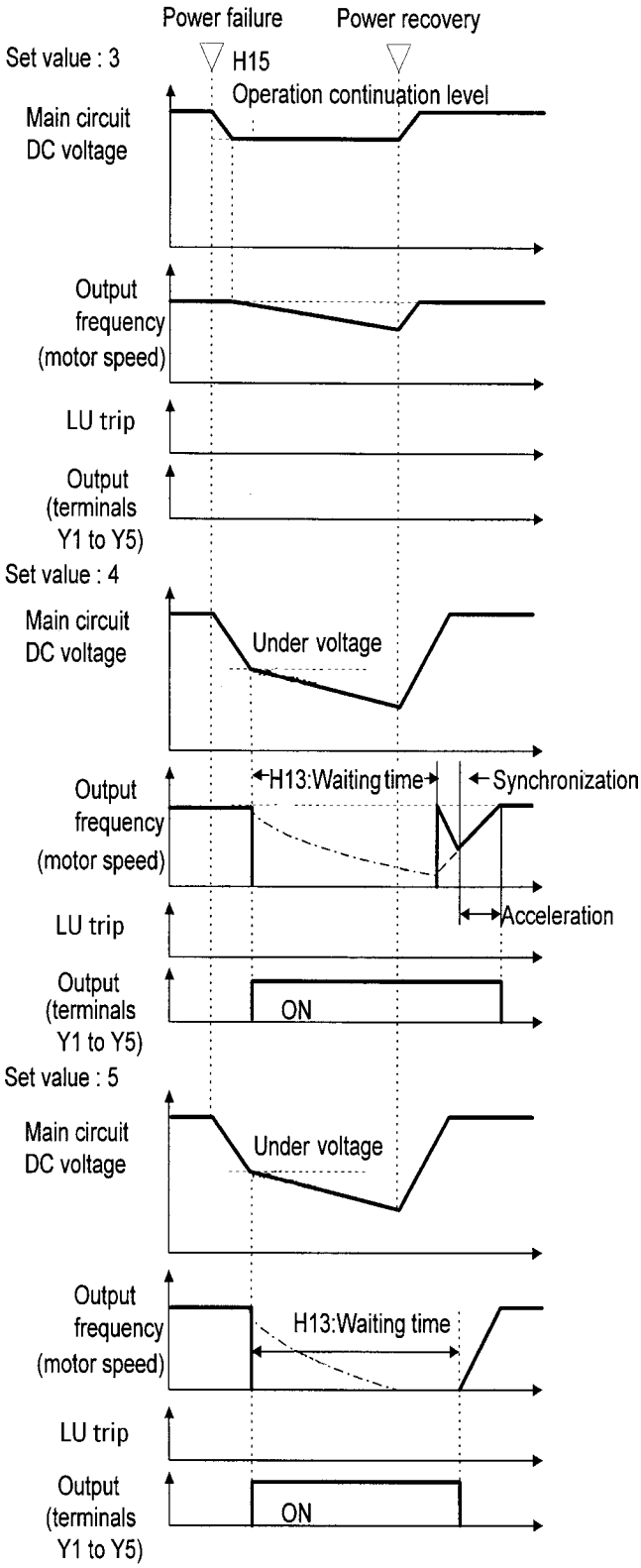

Note : Dotted-dashed lines indicate motor speed.

F15 Frequency limiter (High)

F16 Frequency limiter (Low)

F	1	5	H		L	I	M	I	T	E	R	
F	1	6	L		L	I	M	I	T	E	R	

Setting range 0 to 120 Hz

These functions are used to define the upper and lower limits of the set frequency.

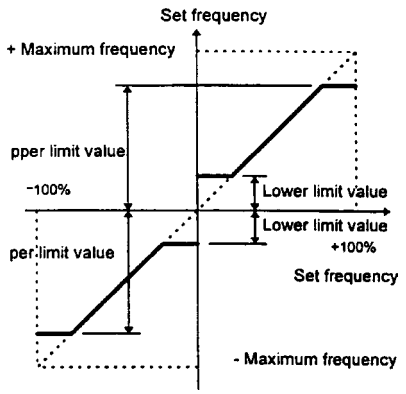

The drive output starts with the start frequency when operation begins, and stops with the stop frequency when operation ends.

If the upper limit value is less than the lower limit value, the upper limit value overrides the lower limit value.

F17 Gain

F	1	7	F	R	E	Q		G	A	I	N	

Setting range: 0.0 to 200.0%

This function assigns the rate of the set frequency value to analog input.

Operation follows the figure below.

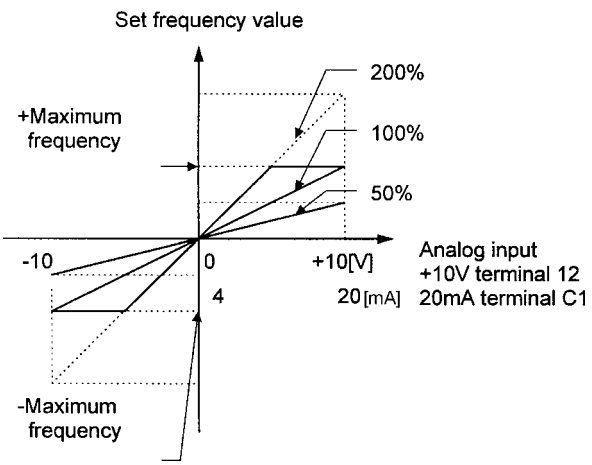

F18 Bias frequency

F	1	8	F	R	E	Q		B	I	A	S	

Setting range: -120.0 to 120.0 Hz

This function adds a bias frequency to the set frequency value from analog input.

The operation follows the figure below. If the bias frequency is higher than the +Maximum frequency or lower than the -Maximum frequency, it is limited to the +Maximum or -Maximum frequency.

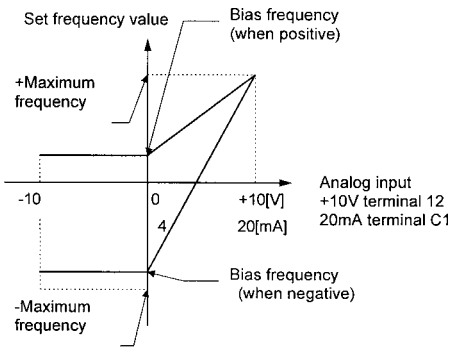

F20 DC injection Brake (starting)

F21 DC injection brake (operation level)

F22 DC injection brake (time)

F	2	0	D	C		B	R	K		H	z	

Setting range: 0 to 60 Hz

Starting frequency: This function sets the frequency with which to start a DC injection brake in order to decelerate the motor to a stop.

F	2	1	D	C		B	R	K		L	V	L

Setting range: 0 to 80%

Operation level: This function sets the output current level, when a DC injection brake is applied, as a percentage of the rated output current in 1% increments.

F	2	2	D	C		B	R	K		t		

Setting range: 0.0: Inactive

0.1 to 30.0 seconds

Time: This function sets the time for a DC injection brake operation.

CAUTION

Do not use the drive brake function for mechanical holding. **Injury may result.**

F23 Starting frequency (frequency)

F24 Start frequency (Holding time)

F25 Stop frequency

F23 START Hz

Setting range: 0.1 to 60 Hz
Frequency: This function sets the frequency at startup.

The starting frequency can be set to reserve the torque at startup and can be sustained until the magnetic flux of the motor is established.

F24 HOLDING t

Setting range: 0.1 to 10.0 seconds

Holding time: This function sets the holding time during which the start frequency is sustained at startup.

- The holding time does not apply during switching between forward and reverse.
- The holding time is not included in the acceleration time.
- The holding time also applies when pattern operation (C21) is selected. The holding time is included in the timer value.

F25 STOP Hz

Setting range: 0.1 to 6.0 Hz

This function sets the frequency at stop.

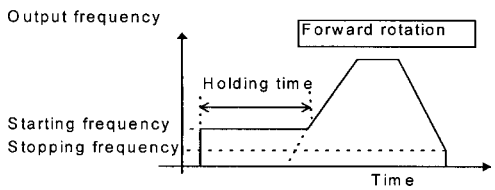

The operation will not start if the starting frequency is less than the stopping frequency or if the set frequency is less than the stopping frequency.

F26 Motor sound (carrier frequency)

F26 MTR SOUND

This function adjusts the carrier frequency to prevent resonance with the machine system, reduce motor and drive noise, and also reduce leakage current from output circuit wiring.

Drive Capacity	Setting Range
30 Hp or less	0.75 to 15kHz
40 to 100 Hp	0.75 to 10kHz
100 Hp or more	0.75 to 6kHz

Carrier frequency	Low — High
Motor noise	High — Low
Output current waveform	Bad — Good
Leakage current	Small amount – Large amount
Noise occurrence (RFI)	Extremely low – High

1. Reducing the set value adversely affects the output current waveform (i.e., higher harmonics), increases motor loss, and raises motor temperature. For example, at 0.75 kHz, reduce the motor torque by about 15%.
2 Increasing the set value increases drive losses and raises drive temperature.

F27 Motor sound (sound tone)

F27 MTR TONE

Setting range: 0 , 1, 2 , 3

The tone of motor noise can be altered if the carrier frequency is 7 kHz or lower. Use this function as required.

F30 FMA terminal (voltage adjustment)

F31 FMA terminal (function selection)

F30 FMA V–ADJ

Setting range: 0 to 200%

Monitor data (e.g.,output frequency, output current) can be output to terminal FMA as a DC voltage. The amplitude of the output can also be adjusted.

This function adjusts the voltage value of the monitor item selected in F31 when the monitor amount is 100%. A value from 0 to 200% can be set in 1% increments.

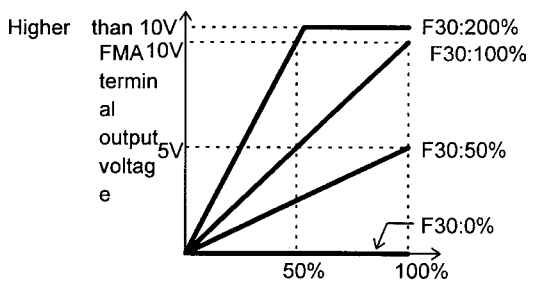

F31 FMA FUNC

This function selects the monitor item to be output to Terminal FMA.

Value	Monitor Item	100% Monitor Amount
0	Output frequency 1 (before slip compensation)	Maximum output frequency
1	Output frequency 2 (after slip compensation)	Maximum output frequency
2	Output current	2x rated output current of drive
3	Output voltage	230V series: 250V 460V series: 500V
4	Output torque	2x rated motor torque
5	Load rate	2x rated load of motor
6	Output	2x rated drive output
7	PID feedback amount	Feedback amount at 100%
8	PG feedback amount (only when option is installed)	Synchronous speed at maximum frequency
9	DC link circuit voltage	230V series: 500V 460V series: 1,000V
10	Universal AO	Output from RS485 or Bus option

F33 FMP terminal (pulse rate)

F34 FMP terminal (voltage adjustment)

F35 FMP terminal (function selection)

Monitor data (e.g., output frequency, output current) can be output to terminal FMP as pulse voltage. Monitor data can also be sent to an analog meter as average voltage.
When sending data to a digital counter or other instrument as pulse output, set the pulse rate in F33 to any value and the voltage in F34 to 0%.
When data is sent to an analog meter or other instrument as average voltage, the voltage value set in F34 determines the average voltage, and F33 is fixed at 2670 (p/s).

F33 FMP PULSES

Setting range 300 to 6,000 p/s, in 1 p/s increments

The F33 function sets the pulse frequency of the monitor item selected in F35.

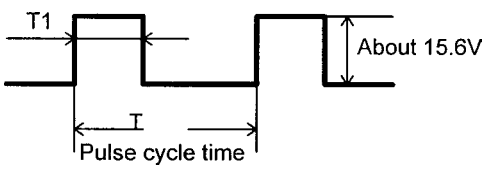

Pulse frequency (p/s) = 1/T

Duty (%) = T1/T x 100

Average voltage (V) = 15.6 x T1/T

F34 FMP V–ADJ

Set value 0%: The pulse frequency varies depending on the amount of the monitor item selected in F35 (max. value is the value set in F33).

The F34 function sets the average voltage of pulse output to terminal FMP.

1 to 200%: Pulse frequency is fixed at 2,670 p/s. The average voltage of the monitor item selected in F35, when the monitor amount is 100%, is adjusted in the range 1 - 200%, in 1% increments (pulse duty varies).

F35 FMP FUNC

The F35 function selects the monitor item to be output to terminal FMP.

The set value and monitor items are the same as those used for F31 (refer to table).

F36 30Ry operation mode

F36 30RY MODE

This function specifies whether to activate (excite) the alarm output relay (30Ry) for any fault at normal or alarm status.

Value	Operation	
0	Drive no power	30A - 30C: OFF, 30B - 30C: ON
	At normal	30A - 30C: OFF, 30B - 30C: ON
	At alarm	30A - 30C: ON, 30B - 30C:OFF
1	Drive no power	30A - 30C: OFF, 30B - 30C: ON
	At normal	30A - 30C: ON, 30B - 30C: OFF
	At alarm	30A - 30C: OFF, 30B - 30C: ON

If the set value is 1, contacts 30A and 30C are connected when the drive control voltage is established (about one second after power on).

F40 Torque limit 1 (drive)

F41 Torque limit 1 (brake)

F40 DRV TRQI
F41 BRK TRQI

The torque limit operation calculates motor torque from the output voltage, current and the primary resistance value of the motor, and controls the frequency so the calculated value does not exceed the limit. This operation enables the drive to continue operation under the limit even if a sudden change in load torque occurs.

Limits are set for driving torque and braking torque.

When this function is activated, acceleration and deceleration operation times are longer than the set values.

Function	Set Value	Operation
Torque limit (driving)	20% to 150%	The torque is limited to the set value.
	999	Torque limiting inactive
Torque limit (braking)	20% to 150%	The torque is limited to the set value.
	0	Automatically prevents OU2 trip due to power regeneration effect
	999	Torque limiting inactive

WARNING

When the torque limit function is selected, an operation may not match the set acceleration and deceleration time or set speed. The machine should be so designed that safety is ensured even when operation does not match the set values.

F42 Torque vector control 1

F 4 2 T R Q V E C T O R 1

To obtain the most efficient motor torque, the torque vector control calculates torque according to load, to adjust the voltage and current vectors to optimum values based on the calculated value.

Value	Operation
0	inactive
1	active

Related Functions P01 to P09

If F42 = 1 (active), the following functions are affected:

1. F09 Torque boost 1 is automatically set to 0.0 (automatic torque boosting).
2. P09 Slip compensation control is automatically activated. If set to 0.0, the amount of slip compensation for a standard 3-phase Fuji motor is applied. Otherwise, the set value is applied.

Use the torque vector control function under the following conditions:

1. There can only be one motor.
   Connection of two or more motors makes accurate control difficult.
2. The function data (rated current P03, no-load current P06,, %R1 P07, and %X P08) for Motor 1 must be correct.
   An auto-tuning operation should be performed for other motors.
3. The rated current of the motor must not be significantly less than the rated current of the drive. A motor two sizes lower in capacity than the nominal motor indicated for the drive is the smallest that should be used.
4. To prevent leakage current and ensure accurate control,, the length of the cable between the drive and motor should not exceed 50 m.
5. If a reactor is connected between the drive and the motor and wiring impedance cannot be disregarded, use P04 Auto tuning to reset data.

If these conditions are not satisfied, set F42 = 0 (Inactive).

E01 Terminal X1
E09 Terminal X9

E	0	1	X	1		F	U	N	C			
E	0	2	X	2		F	U	N	C			
E	0	3	X	3		F	U	N	C			
E	0	4	X	4		F	U	N	C			
E	0	5	X	5		F	U	N	C			
E	0	6	X	6		F	U	N	C			
E	0	7	X	7		F	U	N	C			
E	0	8	X	8		F	U	N	C			
E	0	9	X	9		F	U	N	C			

Functions can be individually set from each of the digital input terminals X1 to X9.

Value	Function
0,1,2,3	Multi-step frequency selection (1 to 15 steps)
4,5	Acceleration and deceleration time selection (3 steps)
6	Self-hold selection (HLD)
7	Coast-to-stop command (BX)
8	Alarm reset (RST)
9	External alarm (THR)
10	Jogging (JOG)
11	Frequency setting 2 / Frequency setting 1 (Hz 2 / Hz1)
12	Motor 2 / Motor 1 (M2 / M1)
13	DC injection brake command (DCBRK)
14	Torque limit 2 / Torque limit 1 (TL2 / TL1)
15	Switching operation from line to drive (50 Hz) (SW50)
16	Switching operation from line to drive (60 Hz) (SW60)
17	UP command (UP)
18	DOWN command (DOWN)
19	Edit permission command (WE-KP)
20	PID control cancellation (Hz / PID)
21	Normal/Inverse switching (Terminals 12 and C1) (IVS)
22	Interlock (52-2) (IL)
23	Torque control cancellation (Hz/TRQ)
24	Link communication selection (LE)
25	Universal DI (U-DI)
26	Pick up start mode (STM)
30	Timed alarm stop command (STOP1)
31	Timed alarm stop command with Deceleration time 4 (STOP2)

Note: Values which are not set in the functions from E01 to E09 are assumed to be inactive.

Multi-step frequency selection

Value 0,1, 2, 3: The frequency can be switched to a preset frequency in function codes C05 to C19 by switching the external digital input signal. Assign values 0 to 3 to the target digital input terminal. The combination of input signals determines the frequency.

Combination of Input Signals				Selected Frequency	
3 (SS8)	2 (SS4)	1 (SS2)	0 (SS1)		
off	off	off	on	C05 MULTI Hz-1	Related Functions: C05-C19 Setting Setting 0.00 to - 400.00 Hz
off	off	on	off	C06 MULTI Hz-2	
off	off	on	on	C07 MULTI Hz-3	
off	on	off	off	C08 MULTI Hz-4	
off	on	off	on	C09 MULTI Hz-5	
off	on	on	off	C10 MULTI Hz-6	
off	on	on	on	C11 MULTI Hz-7	
on	off	off	off	C12 MULTI Hz-8	
on	off	off	on	C13 MULTI Hz-9	
on	off	on	off	C14 MULTI Hz-10	
on	off	on	on	C15 MULTI Hz-11	
on	on	off	off	C16 MULTI Hz-12	
on	on	off	on	C17 MULTI Hz-13	
on	on	on	off	C18 MULTI Hz-14	
on	on	on	on	C19 MULTI Hz-15	

Acceleration and Deceleration time selection

Value 4, 5: The acceleration and deceleration time can be switched to a preset time in function codes E10 to E15 by switching the external digital input signal. Assign values 4 and 5 to the target digital input terminal. The combination of input signals determines the acceleration and deceleration times.

Combination of Input Signals		Selected Acceleration / Deceleration Times	
5 (RT2)	4 (RT1)		
off	off	F07 ACC TIME1 F08 DEC TIME1	Related Functions E10-E15 Setting Range 0.01 to 3600s
off	on	E10 ACC TIME2 E11 DEC TIME2	
on	off	E12 ACC TIME3 E13 DEC TIME3	
on	on	E14 ACC TIME4 E15 DEC TIME4	

Self-hold selection (HLD)

Value 6: This selection is used for 3-wire operation. The FWD or REV signal is self-held when HLD-CM is on, and this self-hold is cleared when HLD-CM is turned off. To use this HLD terminal function, assign 6 to the target digital input terminal.

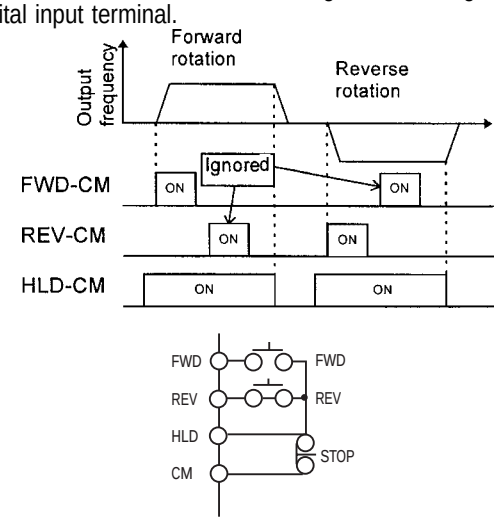

Coast-to-stop command (BX)

Value 7: When BX and CM are connected, drive output is cut off immediately, and the motor starts to coast to a stop. An alarm signal is neither output nor self-held. If BX and CM are disconnected when the operation command (FWD or REV) is on, operation begins at the start frequency. To use this BX terminal function, assign value 7 to the target digital input terminal.

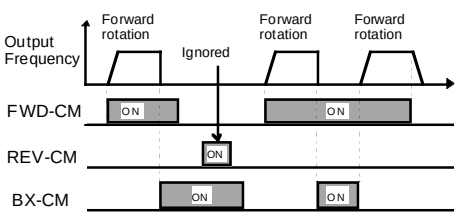

Alarm reset (RST)

Value 8: If a drive trip occurs, connecting RST to CM clears the alarm output (for any fault). Disconnecting them clears the trip indication and restarts operation. To use this RST terminal function, assign value 8 to the target digital input terminal.

External alarm (THR)

Value 9: Disconnecting THR and CM during operation cuts off drive output (i.e., motor starts to coast to a stop) and outputs alarm OH2, which is self-held internally and cleared by RST input. This function is used to protect an external brake resistor and other components from overheating. To use this THR terminal function, assign value 9 to the target digital input terminal. ON input is assumed if this terminal function is not set.

Jogging (JOG)

Value 10: This function is used for jogging operation to position a workpiece. When JOG and CM are connected, the operation is performed with the jogging frequency set in function code C20 while the operation command (FWD-CM or REV-CM) is on. To use this JOG terminal function, assign 10 to the target digital input terminal.

Frequency setting 2/frequency setting 1

Value 11: This function switches the frequency setting method defined by function codes F01 and C30 using an external digital input signal.

Input Signal	Selected Frequency Setting
11	
off	F01 FREQ CMD1
on	C30 FREQ CMD2

Motor 2/Motor 1

Value 12: This function switches motor constants using an external digital input signal.

This input is effective only when the operation command to the drive is off and operation has stopped and does not apply to the operation at 0Hz.

Input Signal	Selected Motor
12	
off	Motor 1
on	Motor 2
	Related Functions: A01-A18

DC injection brake command (DCBRK)

Value 13: This function is used for DC Brake time control by digital input including extending braking operation during stopping as well as during start up into a rotating load. When the external digital input signal is on, DC injection braking starts when the drive's output frequency drops below the frequency preset in function code F20 after the operation command goes off. (The operation command goes off when the STOP key is pressed during keypad panel operation or when both terminals FWD and REV go off during terminal block operation.) The DC injection braking continues while the digital input signal is on. In this case, the longer of the following times is selected:

- The time set with function code F22
- The time during which the input signal is set ON

Input Signal	Selected Operation
13	
off	DC injection brake command not given
on	DC injection brake command given

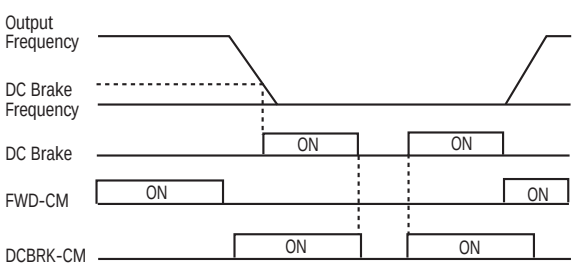

Torque limit 2/torque limit 1

Value 14: Frequency setting 2/frequency setting 1. This function switches the torque limit value set with function codes F40, F41, E16, and E17, using an external digital input signal.

Input Signal	Selected Torque Limit Value	
14		
off	F40 DRV TRQ1 F41 BRK TRQ1	Related Functions F40-F41, E16-E17
on	E16 DRV TRQ2 E17 DRV TRQ2	Setting Range DRV 20 to 200% ,999 BRK0, 20 to 200%, 999

Switching operation from line drive (60Hz)(SW60)/(50Hz)(SW50)

Value 15, 16: Motor operation can be switched from 60 Hz/50 Hz commercial power to drive operation without stopping the motor by switching the external digital input signal.

Input Signal 16	Function
off → on	Drive operation to line operation (60 Hz)/(50 Hz)
on → off	Line operation to drive operation (60 Hz)/(50 Hz)

Following a momentary power failure, if the digital input signal goes off, 50 or 60 Hz (according to the input signal) is output after the restart waiting time (function code H13). The motor is then directed to drive operation.

UP command (UP)/DOWN command (DOWN)

Value 17, 18: When an operation command is input (on), the output frequency can be increased or decreased using an external digital input signal.

The change ranges from 0 to maximum frequency. Operation in the opposite direction, of the operation command is not allowed.

Combination of Input Signals		Selected Function (when operation command is on)
18	17	
off	off	Holds the output frequency
off	on	Increases the output frequency according to the acceleration time
on	off	Decreases the output frequency according to the deceleration time
on	on	Holds the output frequency

There are the two types of UP/DOWN operations as shown below. Select the desired type by setting the frequency (F01 or C30).

Frequency setting (F01 or C30)	Initial value at power input on	Operation command reentry during deceleration
8 (UP/DOWN1)	0Hz	Operates at the frequency at reentry. 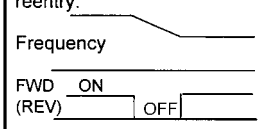
9 (UP/DOWN2)	Previous frequency	Returns to the frequency before deceleration 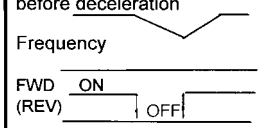

Edit permission command (data change permission)(WE-KP) (data protection)

Value 19: This function allows the data to be changed only when input is received from an external signal, thereby preventing function code data changes.

19	Selected Function
off	Prohibit data changes
on	Allow data changes

Note: If a terminal is assigned the value 19, the data cannot be changed. To change data, turn the terminal on and change its setting to another number.

PID control cancellation (Hz/PID)

Value 20: The PID control can be disabled by an external digital input signal.

Input Signal	Selected Function
20	[Related Functions: H20-H25]
off	Enable PID control
on	Disable PID control

(When the PID control is disabled, the frequency is set from keypad panel)

Normal operation/inverse

Value 21: Analog input (Terminals 12 and C1) can be switched between normal and inverse operations using an external digital input signal.

Input Signal	Selected Function
21	[Related Function: F01]
off	Normal operation if normal operation is set and vice versa
on	Inverse operation if normal operation is set and vice versa

Interlock (52-2)

Value 22: When a contactor is installed on the output side of the drive, the contactor opens at the time of a momentary power failure. This prevents the reduction of the DC circuit voltage and may prevent the detection of a power failure and a correct restart operation after power is recovered. The restart operation, in the event of a momentary power failure, can be performed effectively with power failure information provided by an external digital input signal.

Input Signal	Function
22	
off	No momentary power failure detection by digital input
on	Momentary power failure detection by digital input

Torque control cancellation (Hz/TRQ)

Value 23: If function code **H18 Torque control** is set to active (value = 1 or 2), this operation can be cancelled externally by assigning 23 to the target digital input terminal and switching between active and inactive for this input signal.

Input Signal	Selected Function
23	[Related Function: H18]
off	Torque control function active – the input voltage to Terminal 12 is the torque command value
on	Torque control function inactive - the input voltage to Terminal 12 is the frequency command value. PID feedback amount when PID control operation is selected (H20 = 1 or 2).

Link Operation selection (LE)

Value 24: Frequency and operation commands from the data communications link can be enabled or disabled by switching the external digital input signal. Select the command source in **H30-Link function** and assign 24 to the target digital input terminal to enable or disable commands in this input signal state.

Input Signal	Selected Function
24	[Related Function: H30]
off	Link command disabled
on	Link command enabled

Universal DI (U-DI)

Value 25: Assigning 25 to a digital input terminal renders the terminal a universal DI terminal. The ON/OFF state of signal input to this terminal can be checked through the RS485 and BUS option.

This input terminal is only used to check for an incoming input signal through communication and does not affect drive operation.

Pick up start mode (STM)

Value 26: The (pick-up start mode): in function code H09 can be enabled or disabled by switching the external digital input signal. Assign 26 to the target digital input terminal to enable or disable the function in this input signal state.

Input Signal	Selected Function
26	[Related Function: H09]
off	Start characteristic function disabled
on	Start characteristic function enabled

Timed alarm stop command (STOP1)

Timed alarm stop command with deceleration time 4 (STOP2)

Value 30, 31: Disconnecting STOP1 and CM during operation, the drive decelerates and stops by a present deceleration time (STOP1)/deceleration time 4 (STOP2) setting and then outputs alarm Er6 which is latched internally and cleared by RST input. ON input is assumed when this terminal function is not set.

Digital Input	Value	Factory Settings at Shipment Description
Terminal X1	0	Multi-step frequency selection (SS1)
Terminal X2	1	Multi-step frequency selection (SS2)
Terminal X3	2	Multi-step frequency selection (SS4)
Terminal X4	3	Multi-step frequency selection (SS8)
Terminal X5	4	Acceleration and deceleration selection (RT1)
Terminal X6	5	Acceleration and deceleration selection (RT2)
Terminal X7	6	Self-hold selection (HLD)
Terminal X8	7	Coast-to-stop command (BX)
Terminal X9	8	Alarm reset (RST)

E10 Acceleration time 2
E11 Deceleration time 2
E12 Acceleration time 3
E13 Deceleration time 3
E14 Acceleration time 4
E15 Deceleration time 4

E	1	0	A	C	C		T	I	M	E	2	
E	1	1	D	E	C		T	I	M	E	2	
E	1	2	A	C	C		T	I	M	E	3	
E	1	3	D	E	C		T	I	M	E	3	
E	1	4	A	C	C		T	I	M	E	4	
E	1	5	D	E	C		T	I	M	E	4	

Acceleration time1 (F07) and Deceleration time1 (F08), as well as three other acceleration and deceleration times, can be selected.

The operation and setting ranges are the same as those for Acceleration time1 and Deceleration time1. See explanations for F07 and F08.

For switching acceleration and deceleration times, select any two terminals (from Terminal X1 in E01 to Terminal X9 in E09) as switching signal input terminals. Set the selected terminals to 4 (acceleration and deceleration time1) and 5 (acceleration and deceleration time2) and input a signal to each terminal to switch acceleration and deceleration times. Switching is possible during acceleration, deceleration, or constant speed operation.

Example: When Terminals X2 and X3 are set to 4 and 5:

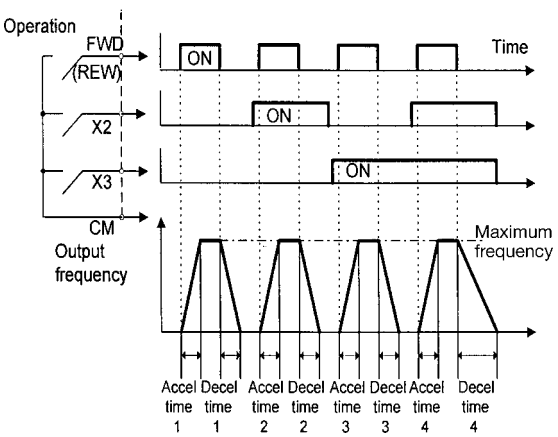

E16 Torque limit 2 (drive)
E17 Torque limit 2 (brake)

E	1	6	D	R	V		T	R	Q		2	
E	1	7	B	R	K		T	R	Q		2	

This function is used to switch the torque limit level set by F40 and F41, using an external control signal. Input an external signal by setting any of the digital input terminals (X1 to X9) to 14 for Torque limit 2 / Torque limit 1 in E01 to E09.

E20 Terminal Y1 (function selection)
E24 Terminals Y5A and Y5C (funtion selection)

E	2	0	Y	1		F	U	N	C			
E	2	1	Y	2		F	U	N	C			
E	2	2	Y	3		F	U	N	C			
E	2	3	Y	4		F	U	N	C			
E	2	4	Y	5		F	U	N	C			

Some control and monitor signals can be selected and output from terminals Y1 to Y5. Terminals Y1 to Y4 use transistor output; terminals Y5A and Y5C use relay contacts.

Value	Output Signal
0	Drive Running (RUN)
1	Frequency arrival (FAR)
2	Frequency detection (FDT1)
3	Stopping due to undervoltage (LV)
4	Torque polarity detection (B/D)
5	Torque limiting (TL)
6	Restart after momentary power failure (IPF)
7	Overload - early warning (OLI)
8	Keypad panel operation (KP)
9	Drive stopping (STP)
10	Ready for operation (RDY)
11	Switching between line and drive (SW88)
12	Switching between line and drive (SW52-2)
13	Switching between line and drive (SW52-1)
14	Motor 2 switching (SWM2)
15	Terminal AX function (AX)
16	Pattern operation stage change (TU)
17	Pattern operation cycle operation completed (TO)
18	Pattern operation stage number (STG1)
19	Pattern operation stage number (STG2)
20	Pattern operation stage number (STG4)
21	Alarm detail (AL1)
22	Alarm detail (AL2)
23	Alarm detail (AL4)
24	Alarm detail (AL8)
25	Cooling fan operating (FAN)
26	Retry function operating (TRY)
27	Universal DO (U-DO) *
28	Heat sink overheat - early warning (OH)
29	Synchronization completed by synchronous operation card (SY) *
30	unused
31	2nd Freq. level detection (FDT2)
32	2nd OL level early warning (OL2)
33	Terminal C1 off signal (C1OFF)

Note: For output signals marked *, refer to instruction manuals for RTU communication and the synchronous operation card.

Drive running (RUN)

Value 0: The RUN signal is output when there is output speed (drive is outputting a frequency). When the DC injection brake function is active, the RUN signal is off.

Frequency arrival (FAR)

Value 1: See the explanation for function code E30 (frequency arrival [detection width]).

Frequency detection (FDT1)

Value 2: See the explanation for function codes E31 and E32 (frequency detection).

Stopping due to undervoltage (LV)

Value 3: If the undervoltage protective function activates, i.e. if the main circuit DC voltage falls below the undervoltage detection level, an ON signal is output. The signal goes off when the voltage recovers and increases above the detection level. The ON signal is retained as long as the undervoltage protective function is active.

Undervoltage detection level:	230V series: 200V 460V series: 400V

Torque polarity detection (B/D)

Value 4: This function determines the torque polarity calculated in the drive and outputs a signal indicating driving or braking torque. An OFF signal is output for driving torque; an ON signal is output for braking torque.

Torque limiting (TL)

Value 5: When torque limiting is active, the stall prevention function is automatically activated to change the output frequency. The torque limiting signal is output to lighten the load and also used to display overload conditions on the monitor device. This ON signal is output while the current or torque is limited or power regeneration is prevented.

Restart after momentary power failure (IPF)

Value 6: Following a momentary power failure, this function reports the start of restart mode, the occurrence of an automatic pull-in, and the completion of the recovery operation.

Following a momentary power failure, an ON signal is output when power is recovered and a synchronization (pull-in) operation is performed. The signal goes off after a frequency level equal to that prior to power failure has been recovered.

For 0 Hz restart at power recovery, no signal is output because synchronization ends when power is recovered. The frequency is not recovered to the level before the power failure occurred.

Overload early warning (OL1)

Value 7: Before the motor is stopped by a trip operation of an electronic thermal O/L relay, this function outputs an ON signal when the load reaches the overload early warning level.

Either the electronic thermal O/L relay early warning or output current overload early warning can be selected.

For setting procedure, see E33 Overload early warning (operation selection) and E34 Overload early warning (operation level).

Note: This function is only effective for Motor 1.

Keypad panel operation

Value 8: An ON signal is output when the operation command keys (FWD, REV and STOP) on the keypad panel can be used (i.e., F02 Operation = 0) to issue operation and stop commands.

Drive stopping (STOP)

Value 9: This function outputs an inverted signal to RUN to indicate zero speed. An ON signal is output when the DC injection brake function is operating.

Ready for operation (RDY)

Value 10: This function outputs an ON signal when the drive is ready to operate. The drive is ready to operate after the main circuit and control circuit power have been established where the drive protective function is not activated.

About one second is required from power-on to ready for operation under normal conditions.

Switching between the AC line and the drive

(SW88)(SW52-2)(SW52-1)

Value 11, 12, 13: To perform a transfer between the line and the drive, the relay sequence can be accomplished using values 11, 12 and 13 on the "Y" outputs. These values will provide outputs that can be used for opening and closing contactors in the transfer sequence. For a detailed explanation of these outputs please refer to the factory.

Motor 2 switching (SWM2)

Value 14: When a signal for switching to Motor 2 is input from the terminal selected by Terminals X1 to X9, this function selects and outputs the signal to switch the magnetic contactor for the motor. Since this switching signal is not output during running, including when the DC injection braking function is operating, a signal must be re-input after output stops.

Terminal AX function (AX)

Value 15: When an operation command (FWD or REV) is entered, this function outputs an ON signal. When a stop command is entered, the signal goes off after drive output stops. When a coast-to-stop command is entered, and the drive protective function is operating, the signal goes off immediately.

Pattern operation stage change (TU)

Value 16: When the pattern operation stage changes, this function outputs a one-shot, 100ms ON signal to report a stage change.

Pattern operation cycle operation completed (TO)

Value 17: After the seven stages of a pattern operation have been completed, this function outputs a one-shot, 100 ms ON signal to report the completion of all stages.

Pattern operation stage number (STG1)(STG2)(STG4)

Value 18, 19, 20: During pattern operation, this function reports the stage (operation process) being operated.

Pattern Operation	**Output Terminal**		
Stage No.	STG1	STG2	STG4
Stage 1	on	off	off
Stage 2	off	on	off
Stage 3	on	on	off
Stage 4	off	off	on
Stage 5	on	off	on
Stage 6	off	on	on
Stage 7	on	on	on

When pattern operation is not activated (i.e., no stage has been selected), the terminals do not output a signal.

Alarm detail (AL1)(AL2)(AL4)(AL8)

Value 21, 22, 23, 24: This function reports the operating status of the drive protective function.

Alarm Detail (Drive Protective Function	Output Terminal			
	AL1	AL2	AL4	AL8
Overcurrent, ground fault, blown fuse	on	off	off	off
Overvoltage	off	on	off	off
Undervoltage shortage, input phase failure	on	on	off	off
Motor 1 and Motor 2 overload	off	off	on	off
drive overload	on	off	on	off
Heat sink overheating, drive overheating internally	off	on	on	off
External alarm input, braking resistor overheating	on	on	on	off
Memory error, CPU error	off	off	off	on
Keypad panel communication error, option communication error	on	off	off	on
Option error	off	on	off	on
Output wiring error	off	off	on	on
RTU communication error	on	off	on	on
Overspeed, PG disconnection	off	on	on	on

Under normal operation, terminals do not output a signa

Cooling fan operating (FAN)

Value 25: When used with H06 Cooling fan ON/OFF control, this function outputs a signal while the cooling fan is operating.

Retry function operating (TRY)

Value 26: When H04 Retry operating is set to 1 or higher, the signal is output during the retry operation, if the drive protective function has been activated.

Universal DO(U-DO)

Value 27: Assigning a value of 27 to a transistor output terminal renders the terminal a universal DO terminal.

This function enables ON/OFF through the RS485 and BUS option.

This function serves only to turn the transistor output on or off through communication and is not related to drive operation.

Heat sink overheat early warning (OH)

Value 28: This function outputs an early warning signal when the heat sink temperature (overheat detection level) is within 10°C of the overtemp trip point.

2nd Freq. level detection (FDT2)

Vallue 31: This function sets the 2nd Freq. level detection. See the explanation of Function Code E36 and E37 Hysteresis width is same as FDT1 (E32).

2nd OL level early warning (OL2)

Value 32: This function sets the 2nd overload early warning. See the explanation of “overload early warning (OL)”, E37.

Terminal C1 off signal (C1OFF)

Value 33: This function outputs an ON signal, when the C1 current input is smaller than 2mA.

Y1-Y5 SETTINGS WHEN SHIPPED FROM THE FACTORY

Digital Output	Factory Setting at Shipment	
	Value	Description
Terminal Y1	0	Operating (RUN)
Terminal Y2	1	Frequency arrival (FAR)
Terminal Y3	2	Frequency detection (FDT)
Terminal Y4	7	Overload early warning (OL)
Terminal Y5	15	Terminal AX function (AX)

E25 Y5 Ry operation mode

This function specifies whether to excite the Y5 relay at “ON signal mode” or “OFF signal mode”

Set Value	Operation
0	At “OFF signal mode” Y5A - Y5C: OFF At “ON signal mode” Y5A - Y5C: ON
1	At “OFF signal mode” Y5A - Y5C: ON At “ON signal mode” Y5A - Y5C: OFF

When the set value is 1, contacts Y5A and Y5C are connected when the drive control voltage is established (about one second after power on).

E30 Frequency arrival (detection width)

E30 FAR HYSTR

Setting range: 0.0 to 10.0 Hz

This function adjusts the detection width when the output frequency is the same as the set operating frequency. The detection width can be adjusted from 0 to ±10 Hz of the setting frequency.

When the frequency is within the detection width, an ON signal can be selected and output from terminals [Y1] to [Y5]

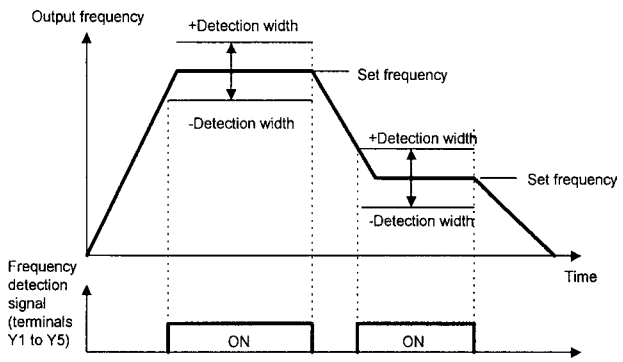

E31 Frequency detection (operation level)
E32 Frequency detection (hysteresis width)

E31 FDT LEVEL
E32 FDT HYSTR

Setting range (Operation level): 0 to 120 Hz

These functions determine the operation level of the output frequency and hysteresis width for operation release. If the output frequency exceeds the set operation level, an ON signal can be output from terminals Y1 to Y5.

(Hysteresis width): 0.0 to 30.0 Hz

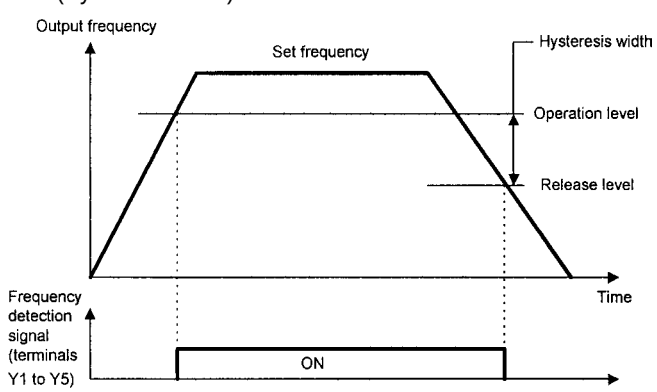

E33 Overload early warning (operation)

E33 OL LEVEL

Setting range: 0: Electronic thermal O/L relay

Select one of the following two types of overload early warning: early warning by electronic thermal O/L relay function or early warning by output current.
1: Output current

Value	Function	Description
0	Electronic thermal O/L relay	Overload early warning by electronic thermal O/L relay (with inverse time characteristics) to output current. The operation selection and thermal time constant for the inverse time characteristics are the same as those of the electronic thermal O/L relay for motor protection (F10 and F12).
1	Output current	An overload early warning is issued when output current exceeds the set current value for the set time.

E34 Overload early warning (operation level)

E34 OL1 LEVEL

Setting range: Drive rated output current x (5 to 150%)

This function determines the operation level for the electronic thermal O/L relay or output current.
The operation release level is 90% of the set value.

E35 Overload early warning (operation time)

E35 OL TIMER

Setting range: 0.0 to 60.0 seconds

This function is used when E33 Overload early warning (operation selection) is set to 1.

Sets the time from when the operation level is attained until the overload early warning function is activated.

E36 Frequency detection 2 (operation level)

E36 FDT2 LEVEL

This function determines the operation (detection) level 2 of the output frequency for operation release. This function operates the same as "E31 Frequency detection 1 (operation level)". For details, see the explanation for E31.

E37 Overload early warning 2 (operationlevel)

E37 OL2 LEVEL

This function determines the operation level 2 of the output current. This function operates same as E33 output current and E35 setting.

E40 Display coefficient A
E41 Display coefficient B

E40 COEF	A
E41 COEF	B

Setting range:

Display coefficient A: -999.00 to 0.00 to +999.00
Display coefficient B: -999.00 to 0.00 to +999.00

These coefficients are conversion coefficients which are used to determine the load and line speed and the PID controller target value and feedback (process) amount displayed on the LED monitor.

Load and line speed
Use display coefficient A.
Displayed value = output frequency x (0.01 to 200.00)

Although the setting range is ±999.00, the effective range of display data is 0.01 to 200.00. Therefore, values smaller or larger than this range are limited to a minimum value of 0.01 or a maximum value of 200.00.

Target value and feedback amount of PID controller

Set the maximum value of display data in E40 Display coefficient A and the minimum value in E41 Display coefficient B.

Displayed value = (target value or feedback amount) x (Display coefficient A - B) + B

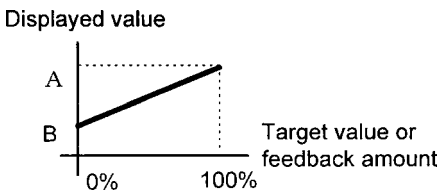

E42 Display filter

E42 DISPLAY	FL

Setting range: 0.0 to 5.0 seconds

Among data in E43 LED monitor (display selection), some data need not be displayed instantaneously when the data changes. For such data, a flicker suppression filter can be used.

Monitored items in E43 LED monitor (display selection)

Value	Display	Value	Display
3	Output current	8	Calculated torque value
4	Output voltage	9	Power consumption

E43 LED monitor (display selection)
E44 LED monitor (display at stopping)

E43 LED	MNT	
E44 LED	MNT	2

The data during drive operation, stopping, at frequency setting, and at PID setting is displayed on the LED.

Display during running and stopping
During running, the items selected in E43 LED monitor (display selection) are displayed. In E44 LED monitor (display at stopping), specify whether to display selected items or the same items as during running.

Value of E43	E44 = 0		E44 = 1	
	at stopping	during running	at stopping	during running
0	set frequency value (Hz)	output frequency before slip compensation (Hz)		
1	set frequency value (Hz)	output frequency before slip compensation (Hz)		
2	set frequency value (Hz)			
3	output current (A)			
4	output voltage command value (V)			
5	synchronous speed set value (rpm)	synchronous speed (rpm)		
6	line speed set value (m/min)	line speed (m/min)		
7	set load speed (rpm)	load speed (rpm)		
8	calculated torque value (%)			
9	output power (kW)			
10	PID target value 1 (direct input from keypad panel)			
11	PID target value 2 (input from F02 Frequency 1)			
12	PID feedback amount			

Note: For E43 = 10 to 12, the data is displayed only if selected in H20 PID control (operation selection).

Display at frequency setting

When a set frequency is checked or changed by the keypad panel, the value shown below is displayed.

Select the display item by using E43 LED monitor (display selection). This display is not affected by E44 LED monitor (display at stopping).

Value of E43	Frequency Setting
0,1,2,3,4	set value of frequency (Hz)
5	set value of synchronous speed (rpm)
6	set value of line speed (m/min.)
7	set value of load speed (rpm)
8,9	set value of frequency (Hz)
10,11,12	set value of frequency (Hz)

Note: For E43 = 10 to 12 the data is displayed only if selected in H20 PID control (operation selection).

E45 LCD monitor (display selection)

E 4 5 L C D M N T R

This function selects the items to be displayed on the LCD monitor in operation mode.

Value	Display Items
0	Operation status, direction of rotation, operation guide
1	Output frequency before slip compensation, output current, calculated torque in bar graph

Set value: 0

During running

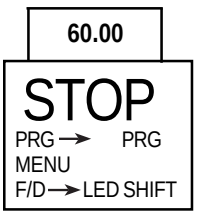

When stopping

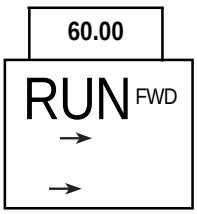

Set value: 1

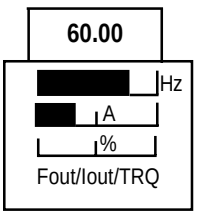

Full scale value of bar graph

Display item	Full scale
Output frequency	Maximum frequency
Output current	200% of drive rated value
Calculated torque value	200% of motor rated value

Note: The scale cannot be adjusted.

E46 LCD monitor (language)

E 4 6 L A N G U A G E

This function selects the language for data display on the LCD monitor.

Value	Language	Value	Language
0	Japanese	3	French
1	English	4	Spanish
2	German	5	Italian

Note: English language is used for all LCD screens in this manual.

E47 LCD monitor (contrast adjustment)

E 4 7 C O N T R A S T

This function adjusts the LCD contrast. Increase the set value to raise contrast and decrease to lower contrast.

Value	0, 1, 2 •••••• 8, 9, 10
Screen	Low High

C01 Jump frequency 1
C02 Jump frequency 2
C03 Jump frequency 3
C04 Jump frequency hysteresis

C	0	1	J	U	M	P		H	z		1	
C	0	2	J	U	M	P		H	z		2	
C	0	3	J	U	M	P		H	z		3	

Setting range: 0 to 120 Hz in 1Hz increments (min.)

C	0	4	J	U	M	P		H	Y	S	T	R

Setting range: 0 to 30 Hz in 1Hz increments (min.)

This function makes the set frequency jump so that the drive's output frequency does not match the mechanical resonance point of the load.

Up to three jump points can be set.

This function is ineffective if jump frequencies 1 to 3 are set to 0 Hz.

A jump does not occur during acceleration or deceleration.

If a jump frequency setting range overlaps another range, both ranges are added to determine the actual jump area.

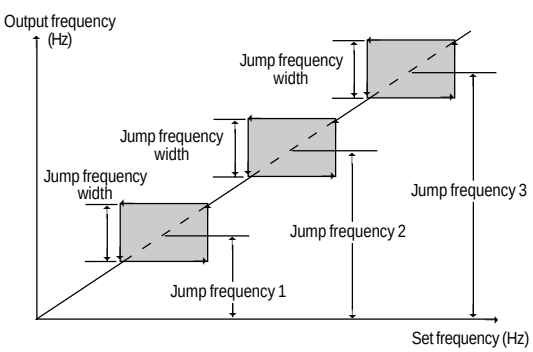

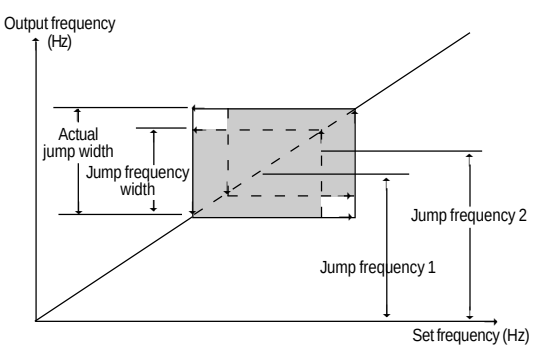

C05-C19 Multi-step frequency 1 to 15

C	0	5	M	U	L	T	I		H	z	–	1
C	0	6	M	U	L	T	I		H	z	–	2
C	0	7	M	U	L	T	I		H	z	–	3
C	0	8	M	U	L	T	I		H	z	–	4
C	0	9	M	U	L	T	I		H	z	–	5
C	1	0	M	U	L	T	I		H	z	–	6
C	1	1	M	U	L	T	I		H	z	–	7
C	1	2	M	U	L	T	I		H	z	–	8
C	1	3	M	U	L	T	I		H	z	–	9
C	1	4	M	U	L	T	I		H	z	1	0
C	1	5	M	U	L	T	I		H	z	1	1
C	1	6	M	U	L	T	I		H	z	1	2
C	1	7	M	U	L	T	I		H	z	1	3
C	1	8	M	U	L	T	I		H	z	1	4
C	1	9	M	U	L	T	I		H	z	1	5

Setting range: 0 to 120 Hz In 0.01 Hz increments (min.)

Multistep frequencies 1 to 15 can be switched by turning terminal functions SS1, SS2, SS4, and SS8 on and off. (See E01 to E09 for terminal function definitions.)

OFF is the default value any undefined SS1, SS2, SS4, and SS8 terminals.

Related functions: E01 to E09 (Set value: 0 to 3)

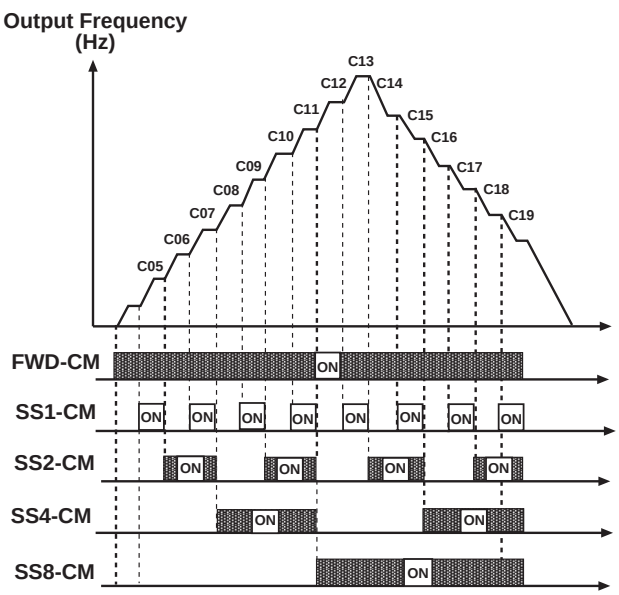

C20 Jog frequency

C20 JOG Hz

Setting range: 0.00 to 120.00 Hz

This function sets a frequency for the motor jogging operation, which is different from the normal operation.

The jogging frequency is used for operation when the jogging mode signal is received from the keypad panel or control terminal. For details, see the explanations of E01 Terminal X1 to E09 Terminal X9.

C21 Pattern operation (operation selection)

C21 PATTERN

Pattern operation is an automatic operation according to a preset operation time, direction of rotation, acceleration and deceleration time, and frequency.

When using this function, set **F01 Frequency setting** to 10 (pattern operation).

[Related Functions: F01, C30 = 10]

The following operation patterns can be selected.

Value	Operation Pattern
0	Perform a pattern operation cycle, then stop operation.
1	Perform pattern operation repeatedly. Operation is stopped by the STOP operation.
2	Perform a pattern operation cycle, then continue operation at the last set frequency.

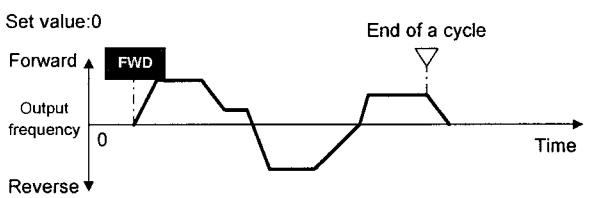

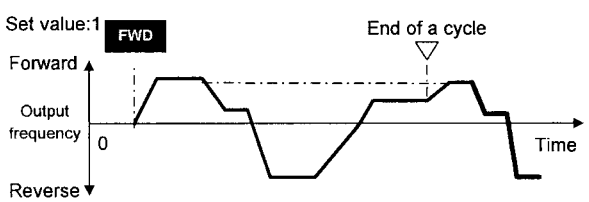

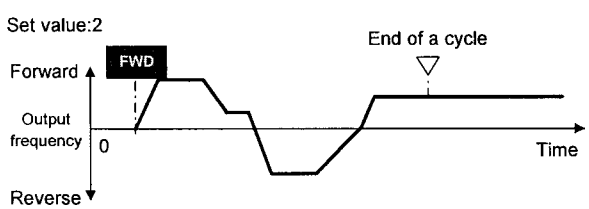

C22-C28 Pattern operation (stage 1 to 7)

C22 STAGE 1
C23 STAGE 2
C24 STAGE 3
C25 STAGE 4
C26 STAGE 5
C27 STAGE 6
C28 STAGE 7

Seven stages are operated in order of function codes, according to the values set in C22 Pattern operation (stage 1) to C28 Pattern operation (stage 7). Each function sets the operation time and the direction of rotation for each stage and assigns values to acceleration and deceleration time.

Set or assign item	Value range
Operation time	0. 00 to 6000s
Rotation direction	F: Forward (counterclockwise) R: Reverse (clockwise)
Acceleration and deceleration time	1: Acceleration time 1 (F07) Deceleration time 1 (F08) 2: Acceleration time 2 (E10) Deceleration time 2 (E11) 3: Acceleration time 3 (E12) Deceleration time 3 (E13) 4: Acceleration time 4 (E14) Deceleration time 4 (E15)

Note: The operation time is represented by the three most significant digits, hence, can be set with only three high-order digits.

Setting example

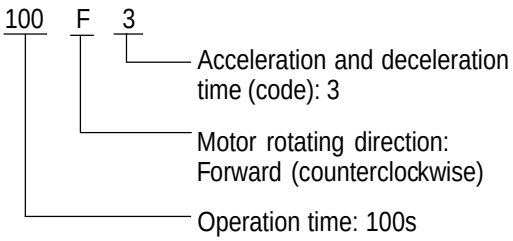

Set the operation time to 0.00 for any unused stages, which are skipped during operation.

In regard to the set frequency value, the multi-step frequency function is assigned according to the table below. Seven frequencies can be set for C05 Multi-step frequency 1 to C11 Multi-step frequency 7.

Stage No.	Operation Frequency
Stage 1	Multi-step frequency 1 (C05)
Stage 2	Multi-step frequency 2 (C06)
Stage 3	Multi-step frequency 3 (C07)
Stage 4	Multi-step frequency 4 (C08)
Stage 5	Multi-step frequency 5 (C09)
Stage 6	Multi-step frequency 6 (C10)
Stage 7	Multi-step frequency 7 (C11)

Pattern operation example
Function Value / Operation Frequency

C21	1	Selects function
C22 (stage 1)	60.0F2	Multi-step frequency 1 (C05)
C23 (stage 2)	100F1	Multi-step frequency 2 (C06)
C24 (stage 3)	65.5R4	Multi-step frequency 3 (C07)
C25 (stage 4)	55.0R3	Multi-step frequency 4 (C08)
C26 (stage 5)	50.0F2	Multi-step frequency 5 (C09)
C27 (stage 6)	72.0F4	Multi-step frequency 6 (C10)
C28 (stage 7)	35.0F2	Multi-step frequency 7 (C11)

The following diagram shows this operation.

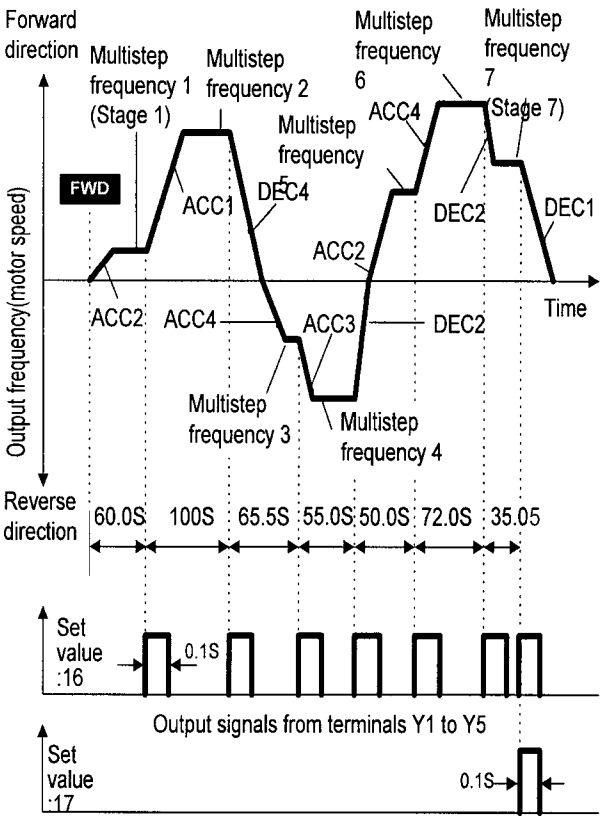

Running and stopping are controlled by pressing the STOP or FWD keys or by opening and closing the control terminals.

When using the keypad panel, the FWD key starts operation. The STOP key pauses stage advance. Pressing the FWD key again will restart operation from the stop point according to the stages. If an alarm stop occurs, press the RESET key to release the drive protective function, then press the FWD key to restart stage advance.

If operation is to restart from the first stage, **C22 Pattern operation (stage 1)**, enter a STOP command and press the RESET key.

If an alarm stop occurs, press the RESET key to release the protective function, then press the RESET key again.

Notes:

1. The direction of rotation cannot be reversed by a command issued from the REV key on the keypad panel or Terminal REV. Any reverse rotation commands entered will be canceled. Select forward or reverse rotation by the data in each stage. If the control terminals are used for operation, the self-hold function will not work. Select an alternate type switch when using control terminals.
2. At the end of a cycle, the motor decelerates to stop according to the value set in F08 Deceleration time 1.

C30 Frequency setting 2

C30 FREQ CMD 2

For the setting method, see the explanation for F01.
Notes: Setting 2, 3, and 7 are inactive. (C1 signals)

This function determines the frequency setting method.

C31 Analog input bias adjustment

The setting range is -100.0 to +100.0% (in 0.1% increments) of the maximum output frequency.

C32 Analog input gain adjustment

The gain adjustment range is 0.0 to 200%.

C31 BIAS
C32 GAIN

These functions set the gain and bias for analog input Terminals 12, in conjunction with functions F17 (freq. gain) and F18 (freq. bias).

For details, see the explanation for F17 and F18.

C33 Analog setting signal

C33 REF FILTER

Setting range: 0.00 to 5.00 seconds

Analog signals input from Terminals 12, V2 or C1 may contain noise which renders the control unstable. This function adjusts the time constant of the input filter to remove the effects of noise.

A value that is set too large delays control response although stabilizing the control. A value that is set too small speeds up control response but renders the control unstable.

If the optimum value is not known, adjust the setting if the control is unstable or response is delayed.

Note:

The set value is commonly applied to Terminals 12, V2 and C1. For input of PID feedback, the PID control feedback filter (H25) is used.

P01 Number of motor 1 poles

P 0 1 M 1 P O L E S

Setting range:: 2, 4, 6, 8, 10, 12, 14

This function sets the number of poles in Motor 1. If this setting is not made, an incorrect motor speed (synchronous speed) is displayed on the LED.

P02 Motor 1 (capacity)

P 0 2 M 1 – C A P

Set values for models with nominal motor capacity of 30Hp or less: 0.01 to 60Hp

Set values for models with nominal motor capacity of 40Hp or more: 0.01 to 800Hp

The nominal motor capacity is set at the factory. This setting should only be changed when driving a motor with a different capacity.

Set the nominal motor capacity listed in 9-1 Standard Specifications. A value in the range from two ratings lower to one rating higher than the nominal motor capacity can be set. If a value outside this range is set, accurate control cannot be guaranteed. If a value between two nominal motor capacities is set, data for the lower capacity is automatically stored for related function data.

If this function setting is changed, the following related functions are automatically set to data values for the Fuji 3-phase standard motor.

— P03 Motor 1 (rated current)

— P06 Motor 1 (no-load current)

— P07 Motor 1 (% R1)

— P08 Motor 1 (% X1)

Note:

The values for the 3-phase standard motor are 230V, 60Hz, 4 poles for the 230V series; 460V, 60Hz, 4 poles for the 460V series.

P03 Motor 1 (rated current)

P 0 3 M 1 – L R

Setting range: 0.00 to 2,000 A

This function sets the rated current value for Motor 1.

P04 Motor 1 (Tuning)

P 0 4 M 1 T U N 1

This function measures and automatically stores motor data.

Value	Operation
0	Inactive
1	Measure the motor's primary resistance (%R1) and base frequency leakage reactance (%X) when the motor is stopping and automatically store both values in P07 and P08.
2	Measure the motor's primary resistance (%R1) and base frequency leakage reactance (%X) when the motor is stopping, measure the no-load current (Io) when the motor is running, and automatically store these values in P06, P07, and P08.

Perform auto tuning if the previously stored data in P06 No-load current, P07 %R1, and P08 %X differs from the actual motor data. Some typical examples are listed below. Auto tuning improves control and calculation accuracy.

– When a motor other than the GE standard 3-phase motor is used, and accurate data is required for close control.
– When output-side impedance cannot be ignored, e.g. when the cable between the drive and the motor is too long or when a reactor is connected.
– When %R1 or %X is unknown, e.g. when a non-standard or special motor is used.

Tuning Procedure

1. Adjust the voltage and frequency according to motor data. Adjust functions F03 Maximum output frequency, F04 Base frequency, F05 Rated voltage, and F06 Maximum output voltage.
2. First enter motor constants that cannot be tuned. Set functions P02 Capacity, P03 Rated current, and P06 No-load current (no-load current setting is not required if P04=2).
3. When tuning the no-load current, beware of motor rotation.
4. Set function P04 Auto tuning = 1 (motor stop) or 2 (motor rotation). Press the FUNC/DATA key to store the set value and press the FWD key or REV key. Tuning will start.
5. Tuning may take several seconds. If P04=2, the motor accelerates up to half the base frequency according to acceleration time, is tuned for the no-load current, and decelerates according to the deceleration time. The total tuning time varies depending on the settings for acceleration and deceleration time.
6. Press the STOP key, and the procedure will end.

Note: Use function A13 Motor 2 (auto tuning) to tune Motor 2. In this case, the set values described in (1) and (2) above are for functions A01, etc. corresponding to Motor 2.

WARNING

If the auto tuning value is set to 2, the motor rotates at a maximum of half the base frequency. Beware of motor rotation as injury may result.

P05 Motor 1 (On-line Tuning)

P	0	5	M	1		T	U	N	2			

Long-time operation affects motor temperature and motor speed. On-line tuning minimizes speed changes related to these temperature changes.

Value	Operation
0	Inactive
1	Active

P06 Motor 1 (no-load current)

P	0	6	M	1	–	I	O					

Setting range: 0.00 to 2,000 A
This function sets the no-load current (exciting current) for Motor 1.

P07 Motor 1 (%R1 setting)

P08 Motor 1 (%X setting)

P	0	7	M	1		%	R	1				
P	0	8	M	1		%	X					

These functions are used to set data if using a motor other than the GE standard 3-phase motor and when the motor constant and the impedance between the drive and motor are known.

Calculate %R1 using the following formula:

$$\%R1 = \frac{R1 + CableR}{V / (\sqrt{3} \bullet I)} \times 100\ [\%]$$

R1: Primary coil resistance value of the motor [W]
Cable R: Output-side cable resistance value [W]
V: Rated voltage [V] I: Rated current [A]
Rated current

$$\%X = \frac{X1 + X2 \bullet XM / (X2 + XM) + Cable\ X}{V / (\sqrt{3} \bullet I)} \times 100\ [\%]$$

X1: Primary leakage reactance of the motor [W]
X2: Secondary leakage reactance (converted to a primary value) of the motor [W]
XM: Exciting reactance of the motor [W]
Cable X: Output-side cable reactance [W]
V: Rated voltage [V]
I: Rated current [A]
Note:

For reactance, use a value from the data stored in F04 Base frequency 1.

When connecting a reactor or filter to the output circuit, add its value. Use value 0 for cable values that can be ignored.

P09 Slip compensation control

P	0	9	S	L	I	P		C	O	M	P	1

Setting range: 0.00 to 15.00 Hz

Changes in load torque affect motor slippage, thus causing variations in motor speed. The slip compensation control adds a frequency, proportional to motor torque, to the drive output frequency. This will minimize variations in motor speed due to changes in torque.

Calculate the amount of slip compensation using the following formula:

$$= \text{Base frequency} \times \frac{\text{Slippage [r/min.]}}{\text{Synchronous speed [r/min.]}}\ [\text{Hz}]$$

Slippage = Synchronous speed - Rated speed

H03 Data initializing

H 0 3 D A T A _ I N I T

Setting rnage: 0: Disabled
1: Initializes data

This function returns all function data changed by the customer to the original factory settings (initialization).

To perform initialization, press the STOP and ^ keys together to set H03=1, then press the FUNC/DATA key. The values for all functions are initialized. The set value in H03 automatically returns to 0 following the end of initialization.

H04 Auto-reset (Times)

H05 Auto-reset (Reset interval)

H 0 4 A U T O – R E S E T

H 0 5 R E S E T _ I N T

Set the protective function release count and waiting time from its startup to release.

Setting range:
(Count) : 0, 1 to 10
(Waiting time) : 2 to 20 seconds

When a drive protective function which invokes the retry operation is activated, these functions release operation of the protective function and restarts operation without issuing an alarm or terminating output.

To disable the retry function, set H04 Retry (count) = 0.

Drive protective functions that can invoke the retry function:

OC1, OC2, OC3: Overcurrent	dBH: braking resistor overheating
OV1, OV2, OV3: Overvoltage	OL1: Motor 1 overload
OH1: Heat sink overheating	OL2: Motor 2 overload
OH3: Drive overheating internally	OLU: Drive overload

If the value of H04 Retry (count) is set from 1 to 10, a drive run command is immediately entered following the wait time set in H05 Retry (wait time) and the startup of the retry operation. If the cause of the alarm has been removed at this time, the drive starts without switching to alarm mode. If the cause of the alarm still remains, the protective function is reactivated according to the wait time set in H05 Retry (waiting time). This operation is repeated until the cause of the alarm is removed. The restart operation switches to alarm mode when the retry count exceeds the value set in H04 Retry (count). The operation of the retry function can be monitored from terminals Y1 to Y5.

WARNING

When the retry function is selected, operation will automatically restart, depending on the cause of the stop. (The machine should be designed to ensure safety during a restart.) When the retry function is selected, GE start software (F02 set 3 or 4) does not work.

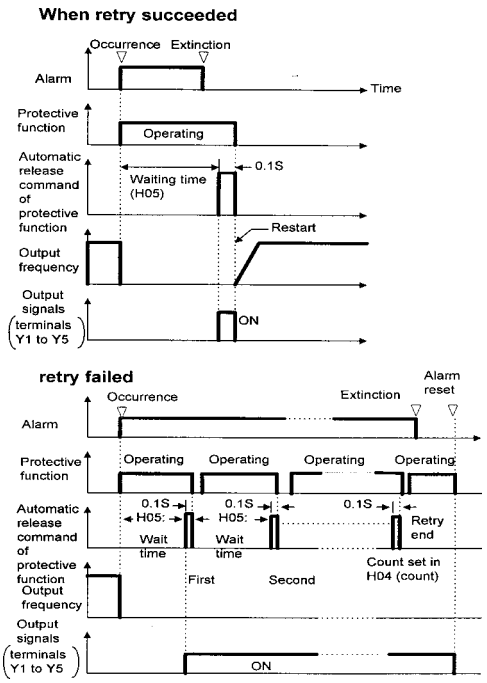

H06 Fan stop operation

H 0 6 F A N _ S T O P

Setting range: 0: ON/OFF control disabled
1: ON/OFF control enabled

This function specifies whether ON/OFF control for the cooling fan is automatic. While power is applied to the drive, the automatic fan control detects the temperature of the heatsink and turns the fan on or off. When this control is not selected, the cooling fan rotates continuously.

The cooling fan operating status can be monitored from terminals Y1 to Y5.

H07 ACC/DEC (Mode select) pattern

H 0 7 A C C _ P T N

Setting range: 0: Inactive (linear acceleration and deceleration)
1: S-shape acceleration and deceleration (mild)
2: S-shape acceleration and deceleration (sharp)
3: Curvilinear acceleration and deceleration

This function selects the acceleration and deceleration pattern.

S-shape Acceleration and Deceleration

This pattern reduces shock by mitigating output frequency changes at the beginning and end of acceleration and deceleration.

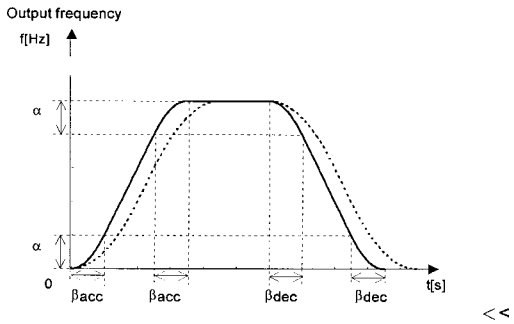

<<

Pattern constants>		
	When 1 is selcted in H07 (mid S-shape pattern)	When 2 is selcted in H07 (mid S-shape pattern)
Range of S-shaped	0.05 x maximum output frequency (Hz)	0.10 x maximum output frequency (Hz)
Time for S-shaped at acceleration	0.10 x acceleration time (s)	0.20 x acceleration time (s) *
Time for S-shaped at deceleration	0.10 x deceleration (s)	0.20 x deceleration (s)

When acceleration and deceleration times are very long or short, acceleration and deceleration are almost linear.

Curvilinear Acceleration and Deceleration

This function is used to minimize motor acceleration and deceleration times in the range that includes a constant output range.

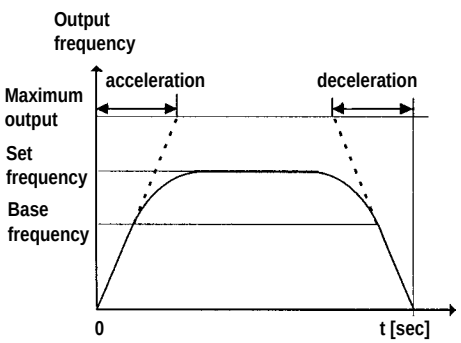

H08 Rev. phase sequence lock

H08 REV LOCK

Setting range: 0: Inactive
1: Active

If accidental reversing could result in a malfunction, this function can be set to prevent reversal.

This function prevents a reversing operation resulting from a connection between the REV and CM terminals, inadvertent activation of the REV key, or negative analog input from Terminals 12 or V1.

H09 Start mode

H09 START MODE

Setting range 0, 1, 2

This function smoothly catches a spinning motor which is coasting after a momentary power failure or after the motor has been subject to external force, without stopping the motor, i.e. windmilling fan.

At startup, this function detects the motor speed and outputs the corresponding frequency, thereby enabling a shock-free motor startup. The normal startup method is used if the coasting speed of the motor is 120 Hz or more as a drive frequency and if the value of F03 Maximum frequency exceeds the value of F15 Frequency limiter (upper limit).

Value	Normal startup	Restart after a momentary power failure	Line-to-drive switching
0	Inactive	Inactive	Inactive
1	Inactive	Active	Active
2	Active	Active	Active

Explanation

1. This function is effective if F14 Restart after momentary power failure (operation selection) is set to 3, 4, or 5. This function is also effective when operation is switched from the line to the drive. The motor is started with the same frequency as the current coasting speed (speed search).
2. In addition to restarting following a momentary power failure and switching between the line and the drive, this function detects the coasting speed of the motor and starts the motor at the same frequency as all startups (including when an ON operation command is entered).

By assigning 26 (start characteristics selection) to terminals X1 to X9, this function can be externally selected as the normal startup method whenever an ON operation command is entered.

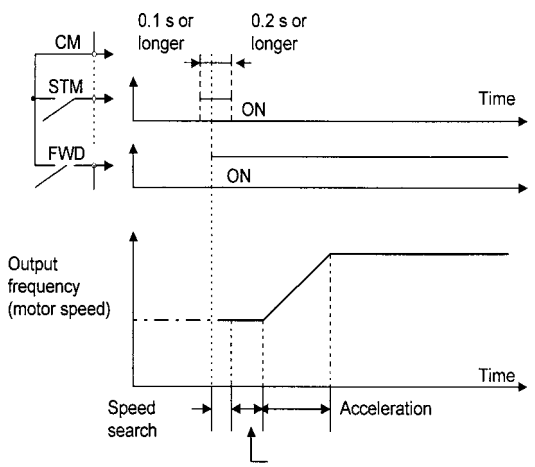

Note: The dotted-dashed line indicates motor speed.

H10 Energy-saving operation

H10 ENERGY SAV

Setting range: 0: Inactive 1: Active

With constant-speed operation at light loads (fixed output frequency), this function automatically reduces the output voltage while minimizing the product of voltage and current (power).

[Exception: If F09 Torque boost 1 = 0.0]

Notes:
Use this function for variable torque loads (e.g., fans, pumps). If used for a constant torque load or rapidly changing load, this function causes a delay in control response.

The energy-saving operation automatically stops during acceleration and deceleration or when the torque limiting function is activated.

H11 DEC mode

H11 DEC MODE

Setting range: 0: Deceleration-to-stop based on data set with H07 Non-linear acceleration and deceleration
1: Coasting-to-stop

This function determines the drive stopping method when a STOP command is entered.

Note:
This function is effective only when a STOP command is entered and, therefore, is ineffective if the motor is stopped by lowering the set frequency.

H12 Instantaneous overcurrent limiting

H12 INST CL

Setting range: 0: Inactive 1: Active

An overcurrent trip generally occurs when current flows above the drive protective level, following a rapid change in motor load. The instantaneous overcurrent limiting function controls drive output and prohibits the flow of a current exceeding the protective level, even if the load changes.

Since the operation level of the instantaneous overcurrent limiting function cannot be adjusted, the torque limiting function must be used.

Motor generation torque may be reduced when instantaneous overcurrent limiting is applied. Set this function to be inactive for equipment such as elevators, which are adversely affected by reduced motor generation torque, in which case an overcurrent trip occurs when the current flow exceeds the drive protective level. A mechanical brake should be used to ensure safety.

H13 Auto-restart (Restart time)

H13 RESTART T

Setting range: 0.1 to 10.0 seconds

Instantaneous switching to another power line (when the power of an operating motor is cut off or power failure occurs) creates a large phase difference between the line voltage and the voltage remaining in the motor, which may cause electrical or mechanical failure. To rapidly switch power lines, store the remaining voltage attenuation time to wait for the voltage remaining in the motor to attenuate. This function operates at restart after a momentary power failure.

If the momentary power failure time is shorter than the wait time value, a restart occurs following the wait time. If the power failure time is longer than the wait time value, a restart occurs when the drive is ready to operate (after about 0.2 to 0.5 seconds).

H14 Auto-restart (freq. fall rate)

H14 FALL RATE

Setting range: 0.00, 0.01 to 100.00 Hz/s

If H14 = 0.00, the frequency is reduced according to the set deceleration time.

This function determines the reduction rate of the output frequency for synchronizing the drive output frequency with the motor speed. This function is also used to reduce the frequency and thereby prevent stalling under a heavy load during normal operation.

Note:
A frequency reduction rate that is set too large may temporarily increase the regeneration energy from the load and invoke the overvoltage protective function. Conversely, a rate that is too small extends the operation time of the current limiting function and may invoke the drive overload protective function.

H15 Auto-restart (holding DC voltage)

H15 HOLD V

Setting range 230V series: 200 to 300V
460 V series: 400 to 600V

This function is used when **F14 Restart after momentary power failure (operation selection)** is set to 2 (deceleration-to-stop at power failure) or 3 (operation continuation). Either function starts a control operation if the main circuit DC voltage drops below the set operation continuation level.

If power supply voltage to the drive is high, control can be stabilized even under an excessive load by raising the operation continuation level. However, if the level is too high, this function activates during normal operation and causes unexpected motion. Please contact Saftronicsbefore changing the factory default value.

H16 Auto-restart (OPR command selfhold time)

H	1	6	S	E	L	F	H	O	L	D		T

Setting range: 0.0 to 30.0 seconds, 999

Since the power to an external operation circuit (relay sequence) and the main power to the drive is generally cut off at a power failure, the operation command issued to the drive is also cut off. This function sets the time an operation command is to be held in the drive. If a power failure lasts beyond the self-hold time, power-off is assumed, automatic restart mode is released, and the drive starts operation at normal mode when power is applied again. (This time can be considered to be the allowable power failure time.)

If H16 = 999, an operation command will be held until control power in the drive is established or until the main circuit DC voltage is about 0.

H19 Active drive

H	1	9	A	U	T		R	E	D			

Setting range: 0: Inactive
1: Active

This function automatically extends accelerating time by 60 seconds or longer to prevent an inverter trip resulting from a temperature rise in the inverter due to overcurrent.

(If the active drive function is activated, the acceleration time will be three times the selected time.)

H20 PID control (mode select)

H	2	0	P	I	D		M	O	D	E		

Setting range: 0: No operation
1: Normal operation
2: Inverse operation

PID control detects the amount of feedback from a sensor and compares it with the target value (e.g., reference temperature). If the values differ, this function produces an output to eliminate the deviation. In other words, this control matches the feedback amount with the target value.

This function can be used for flow control, pressure control, temperature control, and other process controls.

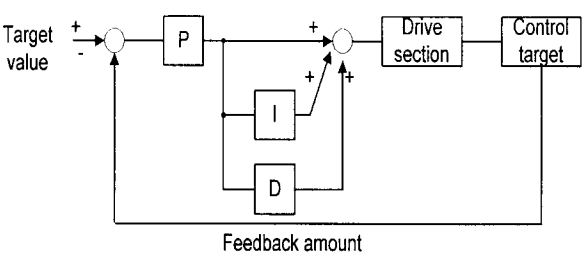

Forward or reverse operations can be selected for PID controller output. This enables motor revolutions to be faster or slower according to PID controller output.

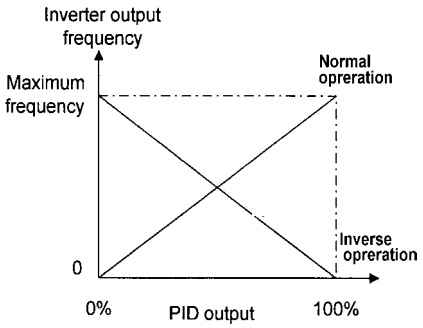

The target value can be entered using F01, Frequency setting 1, or directly from the keypad panel.

For entry from F01, Frequency setting 1, input a signal to the selected terminal. For direct entry from the keypad panel, turn on keypad operation. Select any of the digital Terminals X1 (E01) to X9 (E09) and assign a value of 11 (frequency setting switching).

NOTE: For the target value and feedback amount, the process amount can be displayed according to the values set in E40 Display coefficient A, and E41 Display coefficient B.

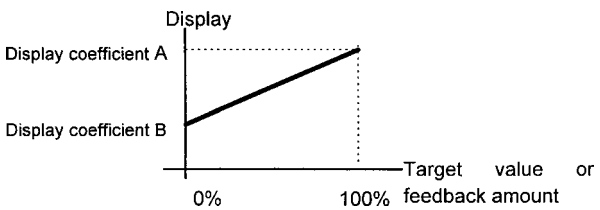

H21 PID control (feedback signal)

H	2	1	F	B		S	I	G	N	A	L	

This function selects the terminal, direction of operation, and feedback input. Select a value from the table below according to sensor specifications.

Value	Description
0	Terminal 12, forward operation, 0 to 10V voltage input
1	Terminal C1, forward operation, 4 to 20mA current input
2	Terminal 12, reverse operation, 10 to 0V voltage input
3	Terminal C1, reverse operation, 20 to 4mA current input

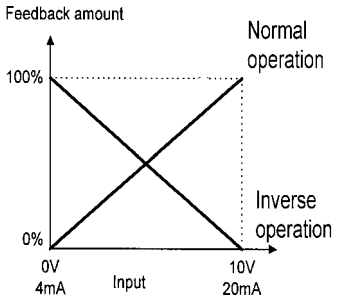

Only positive values can be input for this feedback amount of PID control. Negative values (e.g., 0 to -10V, -10 to 0V) cannot be input, thereby the function cannot be used for a reverse operation by an analog signal.

Feedback signal setting (H21) must be different from the type of setpoint value.

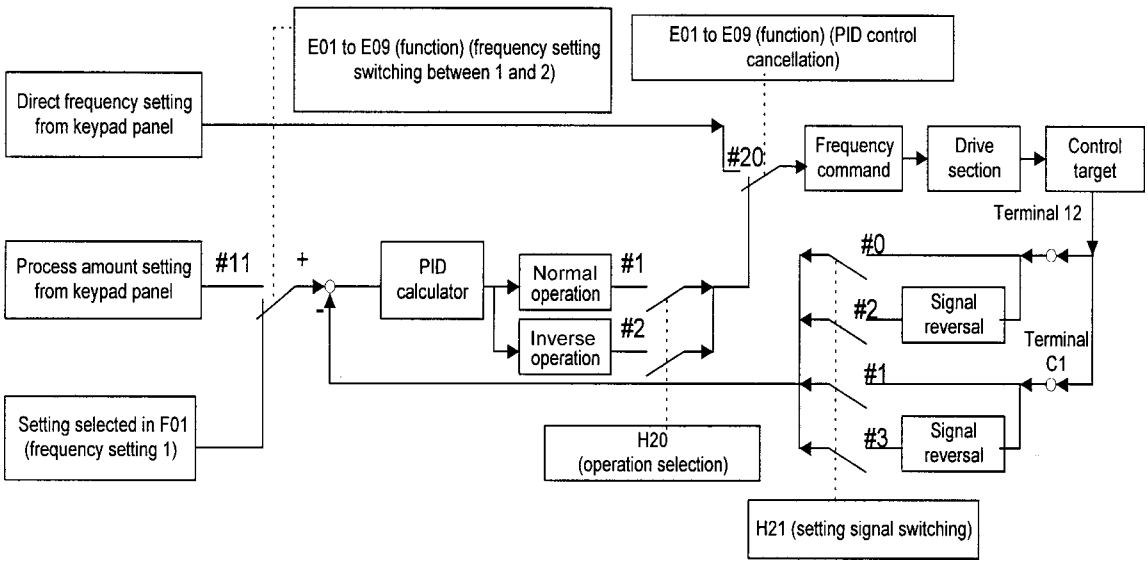

H22 PID control (P-gain)

H23 PID control (I-gain)

H24 PID control (D-gain)

These functions are not generally used alone but are combined like **P** control, **PI** control, **PD** control, and **PID** control.

P-gain operation

An operation using an output frequency proportional to deviation is called **P** operation, which outputs an operation amount proportional to deviation, though it cannot eliminate deviation alone.

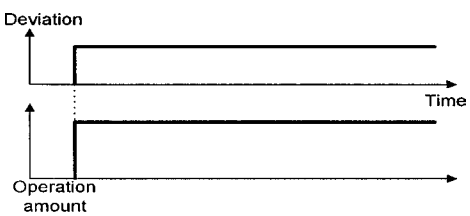

H 2 2 P – G A I N

Setting range: 0.01 to 10.0 times

P (gain) is the parameter that determines the response level for the deviation of **P** operation. Although an increase in gain speeds up response, an excessive gain causes vibration, and a decrease in gain delays response.

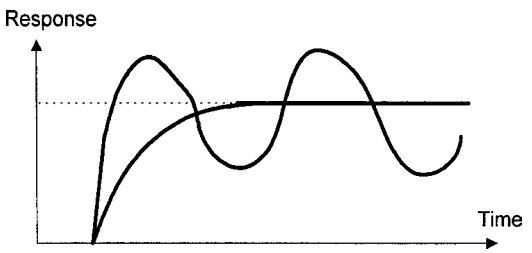

I-gain operation

An operation where the change speed of the output frequency is proportional to the deviation is called an **I** operation. An **I** operation outputs an operation amount as the integral of deviation and, therefore, has the effect of matching the feedback control amount to the target value (e.g., set frequency), though it deteriorates response for significant changes in deviation.

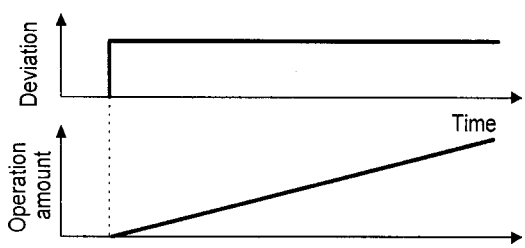

H23 I-GAIN

Setting range: 0.0 (Inactive), 0.1 to 3600 seconds

H23 I-gain is used as a parameter to determine the effect of I operation. A longer integration time delays response and weakens resistance to external elements. A shorter integration time speeds up response, but an integration time that is too short causes vibration.

D-gain operation

An operation where the output frequency is proportional to the deviation differential is called a D operation. It outputs an operation amount as the deviation differential and, therefore, is capable of responding to sudden changes.

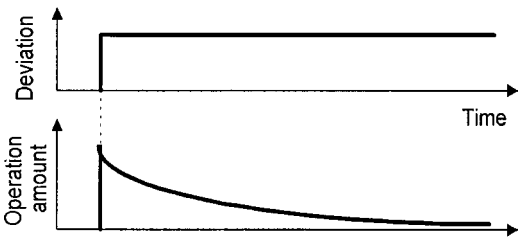

H24 D-GAIN

Setting range: 0.00 (Inactive), 0.01 to 10.0 seconds

H24 D-gain is used as a parameter to determine the effect of a D operation. A longer differentiation time causes vibration by P operation quickly attenuating at the occurrence of deviation. Excessive differentiation time could cause vibration. Shortening the differentiation time reduces attenuation at the occurrence of deviation.

PI control

P operation alone does not remove deviation completely. P + I control (where I operation is added to P operation) is normally used to remove the remaining deviation. PI control always operates to eliminate deviation, even when the target value is changed or there is a constant disturbance. When I operation is strengthened, however, the response for rapidly changing deviation deteriorates. P operation can also be used individually for loads containing an integral element.

PD control

If deviation occurs under PD control, an output frequency larger than that of D operation alone occurs rapidly and prevents the deviation from expanding. For a small deviation, P operation is restricted. When the load contains an integral element, P operation alone may allow responses to vibrate due to the effect of the integral element, in which case PD control is used to attenuate the vibration of P operation and stabilize responses. In other words, this control is applied to loads in processes without a braking function.

PID control

PID control combines the P operation, the I operation which removes deviation, and the D operation which suppresses vibration. This control achieves deviation-free, accurate, and stable responses.

Adjusting PID value

Adjust the PID value while monitoring the response waveform on an oscilloscope or other instrument, if possible. Proceed as follows:

Increase the value of H22 P-gain without generating vibration.

Decrease the value of H23 I-gain without generating vibration.

Increase the value of H24 D-gain without generating vibration.

Adjust the response waveform as follows:

To remove the overshoot, increase the value of H23 I-gain, then decrease the value of H24 D-gain.

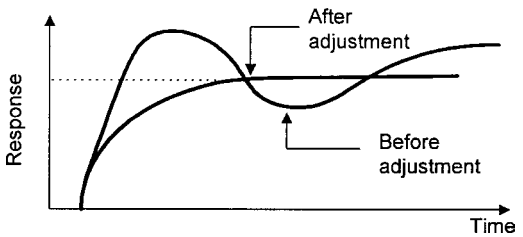

To stabilize response quickly, allowing for min. overshoot, decrease the value of H23 **I**-gain or increase the value of H24 D-gain.

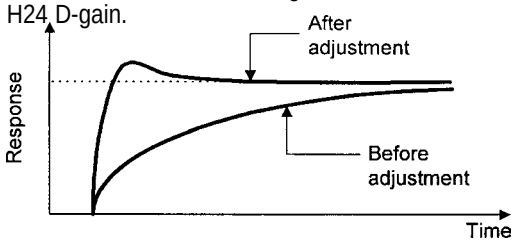

To suppress vibration with a period longer than the value of H23 I-gain, increase the value of H23.

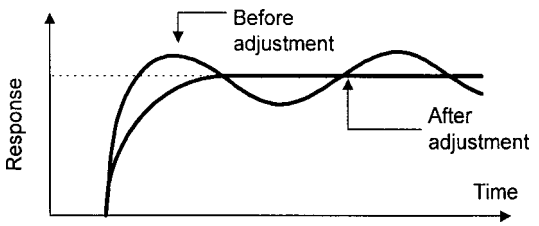

To suppress vibration with a frequency roughly equivalent to the value H24 D-gain, decrease the value of H24. If there is residual vibration with 0.0, decrease the value of H22 P-gain.

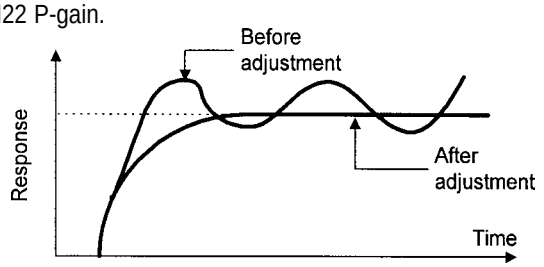

H25 PID control (Feedback filter)

H	2	5	F	B		F	I	L	T	E	R	

Setting range: 0.0 to 60.0 seconds

This filter is for feedback signal input from Terminals 12 or C1. This filter stabilizes operation of the PID control system. A set value that is too large, however, deteriorates response.

H26 PTC thermistor (mode select)

H	2	6	P	T	C		M	O	D	E		

Setting range: 0: Inactive
1: Active

Set this function active when the motor has a PTC thermistor for overheat protection

Connect the PTC thermistor as shown in the figure below. Turn on switch PTC on the control PCB. The trip mode is activated by OH2: External thermal relay tripped.

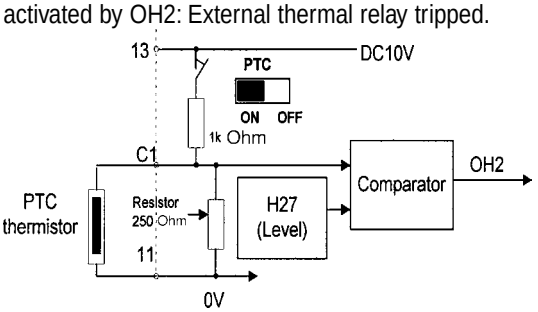

Note: Must be 0 setting when using 4-20mA reference or feedback signal and the PTC switch must be off.

H27 PTC thermistor (level select)

H	2	7	P	T	C		L	E	V	E	L	

Setting range: 0.00 to 5.00V

The voltage input to Terminal C1 is compared to the set voltage level. If the input voltage is equal to or greater than the set voltage, H26 PTC thermistor (Mode select) starts.

The PTC thermistor has its own alarm temperature. The internal resistance value of the thermistor largely changes at the alarm temperature. The operation voltage level is set using this change in the resistance value.

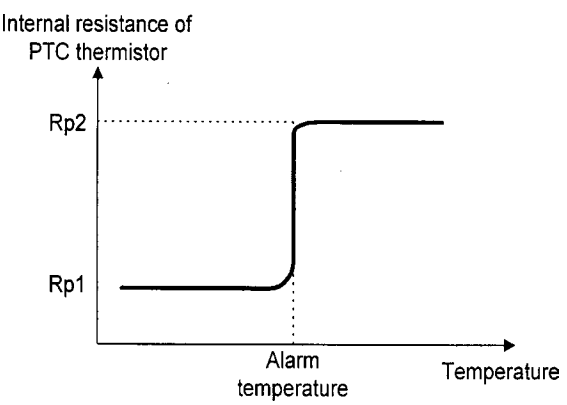

The figure above for H26 PTC thermistor (Mode select) shows that a 250W resistor and the thermistor (resistance value Rp) are connected in parallel. Hence, voltage Vc1 at Terminal C1 can be calculated using the following formula:

$$Vc_1 \frac{\frac{250 \bullet Rp}{250 + Rp}}{1000 + \frac{250 \bullet Rp}{250 + Rp}} X\ 10\ [V]$$

The operation level can be set by bringing Rp in the Vc1 calculation formula into the following range.

Rp1 < Rp < Rp2

To calculate Rp, use the following formula:

$$Rp \frac{Rp_1 + Rp_2}{2} [Ohm]$$

H28 Droop operation

H	2	8	D	R	O	O	P					

Setting range: -9.9Hz to 0.0Hz

When two or more drive motors operate a single machine, a higher load is placed on the motor that is rotating the fastest. Droop operation achieves a good load balance by applying drooping characteristics to speed against load variations.

Calculate the droop amount using the following formula:

$$\text{Droop amount} = \text{Base frequency} \times \frac{\text{Speed droop at rated torque [r/min.]}}{\text{Synchronous speed [r/min.]}} [Hz]$$

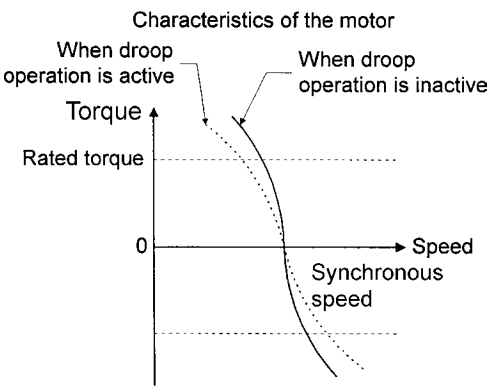

H30 Serial link (Function select)

H30 LINK FUNC

Setting range: 0 to 3

The link function (communication) provides a standard RS485 serial interface and optional fieldbus connections.

The serial link function includes:

1) Monitoring (data monitoring, function data check)
2) Frequency setting
3) Operation command (FWD, REV, and other commands for digital input)
4) Write function data

Communication can be enabled and disabled by a digital input. This function sets the serial link function when communication is enabled.

Value	Frequency Command	Operation Command
0	Disabled	Disabled
1	Enabled	Disabled
2	Disabled	Enabled
3	Enabled	Enabled

The data monitoring and write functions are always enabled. Disabling communication by a digital input produces the same results as if this function were set to 0. If the bus option is installed, this setting selects the bus function, and the RS485 interface is restricted to monitoring and writing function data. If the bus option is not installed, this setting selects the RS485 function.

H31 RS485 (Address)

H39 RS485 (Response interval)

These functions set the conditions for RS485 RTU serial communication. Set the conditions according to the host device.

H31 ADDRESS

Setting range: 1 to 247

This function sets the station address of RTU.
Maximum connected devices is 31 for an RS-485 network.

H32 MODE ON ER

Setting range: 0 to 3

These functions configure the drive behavior in the event of a communication error.

Value	Processing at Communication Error
0	Immediate Er 8 trip (forced stop)
1	Continue operation within timer time, Er 8 trip after time expires
2	Continue operation and retry within timer time, then invoke an Er 8 trip if a communication error occurs. If an error does not occur, continue operation.
3	Continue operation.

H33 TIMER

Setting range: 0 to 60.0 sec.

This function sets the error processing timer value.

H34 BAUD RATE

Setting range: 0 to 3

This function sets the baud rate.

Value	Baud Rate
0	19200 bits/s
1	9600 bits/s
2	4800 bits/s
3	2400 bits/s

H35 LENGTH

This function sets data length.

Value	Data Length
0	8 bit

.

H36 PARITY

This function sets the parity bit

Value	Parity Bit
0	None
1	Even
2	Odd

.

H37 STOP BITS

This function sets the stop bit

Value	Stop Bit
0	2 bits
1	1 bit

The stop bit is automatically configured by the value of the parity bit. For parity “NONE” the stop bit is 2 bits. For parity “EVEN” or “ODD” the stop bit is 1 bit.

H38 NO RES T

Setting range: 0 (no detection)
1 to 60 seconds

In a system where the drive is continuously polled within a specific time, this function detects that access was stopped due to an open circuit or other network fault and results in an Er 8 trip.

H39 INTERVAL

Setting range: 0.00 to 1.00 second

This function sets the time from when a request is issued from the host device to when a response is returned.

A01 Maximum frequency 2

A	0	1	M	A	X		H	z	–	2		

This function sets the maximum frequency for Motor 2 output by the drive. It operates the same as F03 Maximum frequency 1. For details, see the explanation for F03.

A02 Base frequency 2

A	0	2	B	A	S	E		H	z	–	2	

This function sets the maximum output frequency in the constant torque area for Motor 2 (i.e., output frequency at rated output voltage). It operates the same as F04 Base frequency 1. For details, see the explanation for F04.

A03 Rated Voltage 2

A	0	3	R	A	T	E	D		V	2		

This function sets the rated voltage output to Motor 2. It operates the same as F05 Rated voltage 1. For details, see the explanation for F05.

A04 Maximum Voltage 2

A	0	4	M	A	X		V	–	2			

This function sets the maximum drive output voltage for Motor 2. It operates the same as F06 Maximum voltage 1. For details, see the explanation for F06.

A05 Torque boost 2

A	0	5	T	R	Q		B	O	O	S	T	2

This function sets the torque boost function for Motor 2. It operates the same as F09 Torque boost 1. For details, see the explanation for F09.

A06 Electronic thermal relay 2 (select)

A07 Electronic thermal relay 2 (level)

A08 Electronic thermal relay 2 (Thermal time constant)

A	0	6	E	L	C	T	R	N		O	L	2
A	0	7	O	L		L	E	V	E	L	2	
A	0	8	T	I	M	E		C	N	S	T	2

These functions set the function of the electronic thermal overload relay for Motor 2. They operate the same as F10 to F12 Electronic thermal overload relay 1. For details, see the explanations for F10 to F12.

A09 Torque vector control 2

A	0	9	T	R	Q	V	E	C	T	O	R	2

This function sets the torque vector function for Motor 2. It operates the same as F42 Torque vector control 1. For details, see the explanation for F42.

A10 Number of motor-2 poles

A	1	0	M	2		P	O	L	E	S		

This function sets the number of poles to be driven by Motor 2. It operates the same as P01 Number of Motor 1 poles. For details, see the explanation for P01.

A11 Motor 2 (capacity)

A	1	1	M	2	–	C	A	P				

This function sets the capacity of Motor 2. It operates the same as P02 Motor 1 (Capacity). For details, see the explanation for P02. However, the related motor data functions change to A12 Motor 2 (Rated current), A15 Motor 2 (No-load current), A16 Motor 2 (%R1 setting), and A17 Motor 2 (%X setting).

A12 Motor 2 (Rated current)

A	1	2	M	2	–	L	R					

This function sets the rated current for Motor 2. It operates the same as P03 Motor 1 (Rated current). For details, see the explanation for P03.

A13 Motor 2 (Tuning)

A	1	3	M	2		T	U	N	1			

This function sets online tuning for Motor 2. It operates the same as for P04 Motor 1 (Tuning). For details, see the explanation for P04.

A14 Motor 2 (On-line tuning)

A	1	4	M	2		T	U	N	2			

This function sets online tuning for Motor 2. It operates the same as P05 Motor 1 (On-line tuning). For details, see the explanation for P05.

A15 Motor 2 (No-load current)

A	1	5	M	2		I	O					

This function sets the no-load current for Motor 2. It operates the same as P06 Motor 1 (No-load current). For details, see the explanation for P06.

A16 Motor 2 (%R1 setting)

A17 Motor 2 (%X setting)

A	1	6	M	2	–	%	R	1				
A	1	7	M	2	–	%	X					

These functions set %R1 and %X for Motor 2. It operates the same as P07 Motor 1 (%R1 setting) and P08 Motor 1 (%X setting). For details, see the explanations for P07 and P08.

A18 Slip compensation control 2

A	1	8	S	L	I	P		C	O	M	P	2

This function sets the amount of slip compensation for Motor 2. It operates the same as P09 Slip compensation control. For details, see the explanation for P09.

6. Protective Operations

6.1 List of Protective Functions

In the event of an abnormality in the inverter's operation, the protective function will activate immediately to trip the inverter and display the alarm name on the LED monitor while the motor coasts to a stop. A list of the alarms with their explanations is included in the table below, and troubleshooting charts in Section 7.

Table 6.1.1 List of Alarms and Causes

Alarm Name	Keypad Panel Display		Cause of Activation	
	LED	LCD		
Overcurrent	OC1	OC DURING ACC	During acceleration	If the inverter output current momentarily exceeds the overcurrent detection level, due to an overcurrent in the motor, or a short-circuit or ground fault in the output circuit, the protective function is activated during heavy load.
	OC2	OC DURING DEC	During deceleration	
	OC3	OC AT SET SPD	Running at constant speed	
Ground fault	EF	GROUND FAULT	If a ground fault in the inverter output circuit is detected, the protective function is activated (for 40 Hp or more only). If a ground fault occurs in an inverter rated at 30 Hp or less, the inverter is protected by the overcurrent protection. If protection against personal injury or property damage is required, install a separate ground-fault protective relay or ground leakage circuit breaker.	
Overvoltage	OU1	OV DURING ACC	During acceleration	If the DC link voltage in the main circuit exceeds the overvoltage detection level (230V series: 400V DC, 460V series: 800V DC), due to an increase in the regenerating current from the motor, the output is shut down. However, protection against inadvertent overvoltage (e.g., high-voltage line) may not be provided
	OU2	OV DURING DEC	During deceleration	
	OU3	OV AT SET SPD	Running at constant speed	
Undervoltage	LU	UNDERVOLTAGE	If the DC link voltage in the main circuit falls below the undervoltage detection level (230V series: 400V DC, 460V series: 800V DC) due to a lowered power supply, the output is shut down. If function F14 Restart after momentary power failure was selected, an alarm is not displayed. In addition, if the supply voltage falls to a level unable to maintain control power, an alarm may not be displayed.	
Input phase loss	Lin	PHASE LOSS	If input power L1/R, L2/S and L3/T has any phase of the 3 phase power "OPEN" or if there is a significant disparity between the phases, the retifying diodes or smoothing capacitors may be damaged. An Alarm is displayed and the protective function is activated during heavy load.	
Overheating of heat sink	OH1	FIN OVERHEAT	If the temperature of the heat sink rises due to a cooling fan failure, or the temperature of the heatsink is too low, the protective function is activated during heavy load.	
External alarm	OH2	EXT ALARM	If the external alarm contacts on the braking unit, braking resistor, or external thermal O/L relay are connected to the control circuit terminals (THR), the contacts will be actuated according to contact signals.	
Overheating internally	OH3	HIGH AMB TEMP	If the temperature inside the inverter rises due to poor ventilation, etc., the protective function is activated.	
Overheating of braking resistor	dbH	DBR OVERHEAT	If electronic thermal O/L relay (for braking resistor) function F13 is selected, the protective function is activated to prevent the resistor from burning due to overheating caused by frequent use of the braking resistor.	
Motor 1 overload	OL1	MOTOR1 OL	The protective function is activated if the motor current exceeds the preset level, provided that electronic thermal O/L relay 1 function F10 has been selected.	
Motor 2 overload	OL2	MOTOR2 OL	If the second motor current exceeds the preset level when the operation is switched to drive the second motor, the protective function is activated, provided that electronic thermal O/L relay 2 of function A04 was selected.	
Drive overload	OLU	INVERTER OL	If the output current exceeds the rated overload current, the protective function is activated to provide thermal protection against overheating of the semiconductor elements in the inverter's main circuit.	
Blown fuse	FUS	DC FUSE OPEN	If the fuse in the inverter is blown out following a short-circuit or damage to the internal circuit, the protective function is activated (for 40 Hp or more only).	
Memory error	Er1	MEMORY ERROR	If a memory error occurs, such as missing or invalid data, the protective function is activated.	
Keypad panel communication error	Er2	KEYPD COM ERR	If a communication error or interrupt between the keypad panel and control circuit is detected, the protective function is activated.	
CPU error	Er3	CPU ERROR	If a CPU error occurs due to noise, etc., the protective function is activated.	
Option error	Er4	OPTN COM ERR	Error occurred while using an optional unit.	
	Er5	OPTION ERROR		
Operating error	Er6	OPR PROCD ERR	Detects drive operating procedure error during drive startup. FWD or REV connected to terminal CM when Main power is applied to drive (F02 setting 3 or 4). Stop key on keypad is pressed in terminal operation (F02 setting 1 or 3). Detected timed alarm stop command.	
Output wiring error	Er7	TUNING ERROR	If there is an open circuit or connection error in the inverter output wiring during an auto-tuning procedure, the protective function is activated.	
Modbus RTU error	Er8	RS485 COM ERR	If an error occurs while using Modbus-RTU, the protective function is activated.	

Note: Number in fron of Alarm Code indicates multiple alarms. See page 4-15.

6.2 Alarm Reset

To release the trip status, enter the reset command by pressing the RESET key on the keypad panel or sending the appropriate signal to the RST terminal after removing the cause of the trip. Since the reset command is an edge operation, input a command sequence such as OFF-ON-OFF as shown in Fig.6-2-1.

When releasing the trip status, set the operation command to OFF. If the operation command is set to ON, inverter will start operation after resetting.

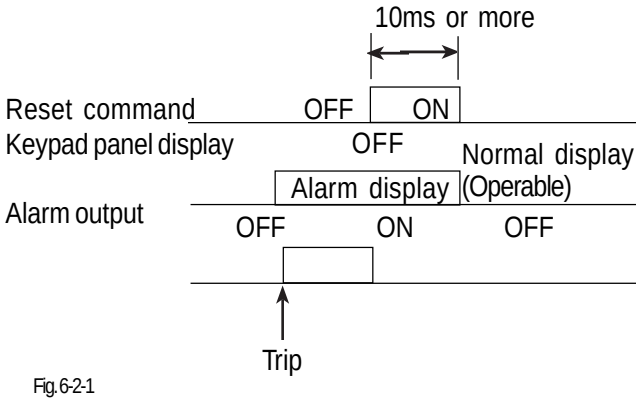

Fig.6-2-1

WARNING

If the alarm reset is activated with the operation signal ON, the inverter will restart suddenly, which may be dangerous. To ensure safety, disable the operating signal when releasing the trip status, as accident may result.

7. Troubleshooting

7.1 Activation of Protective Function

(1) Overcurrent

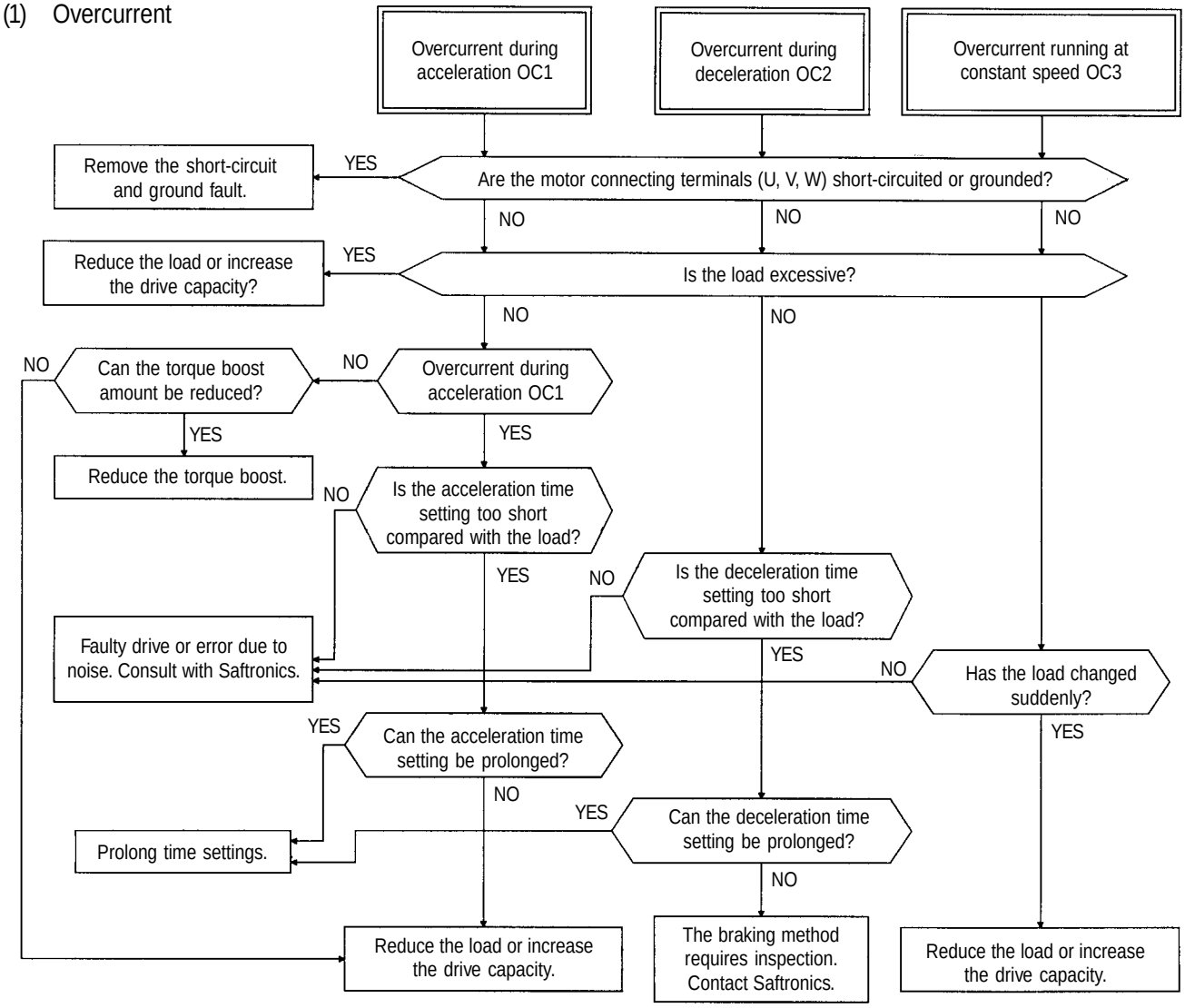

(2) Ground fault

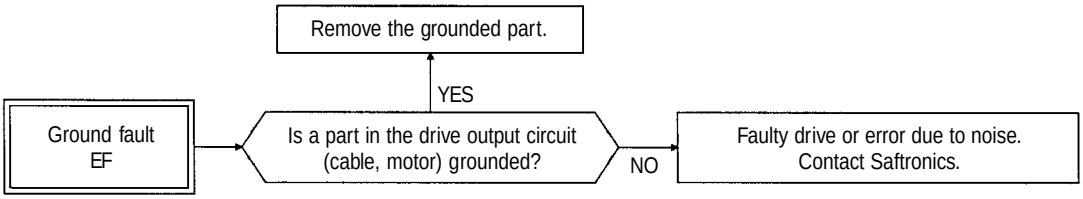

Note: The ground fault protective function is provided only for drive for nominal applied motors rated at 40 HP or more.

(3) Fuse blown

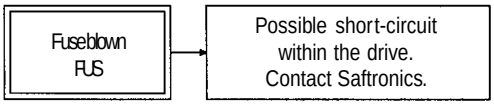

(4) Overvoltage

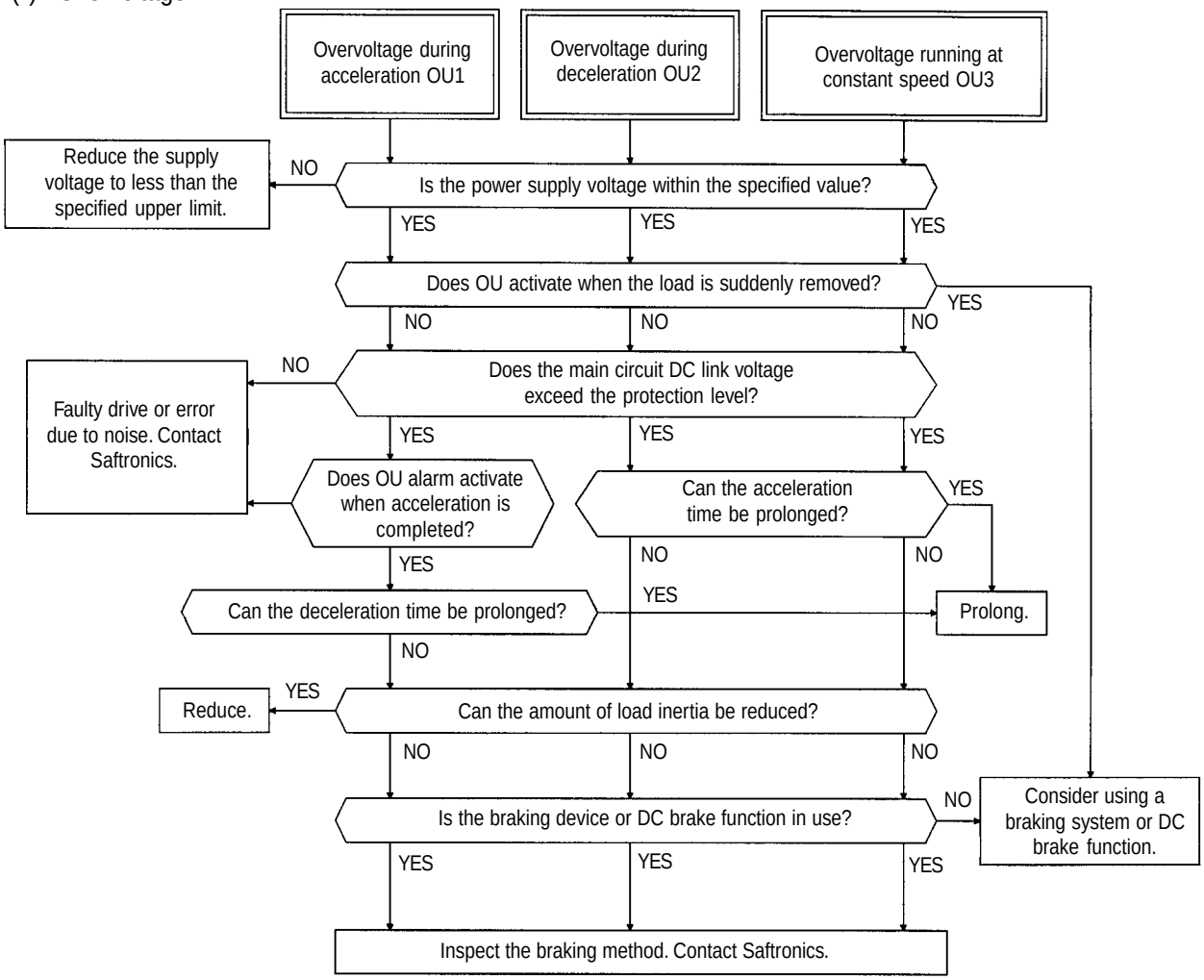

(5) Low voltage

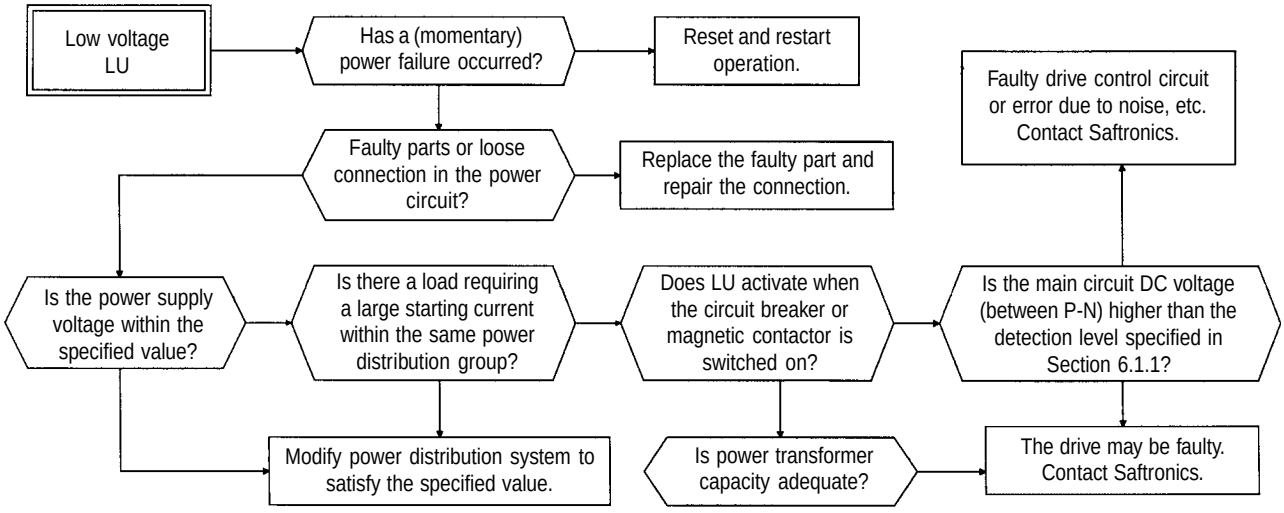

(6) Overheating internally and overheating of heat sink

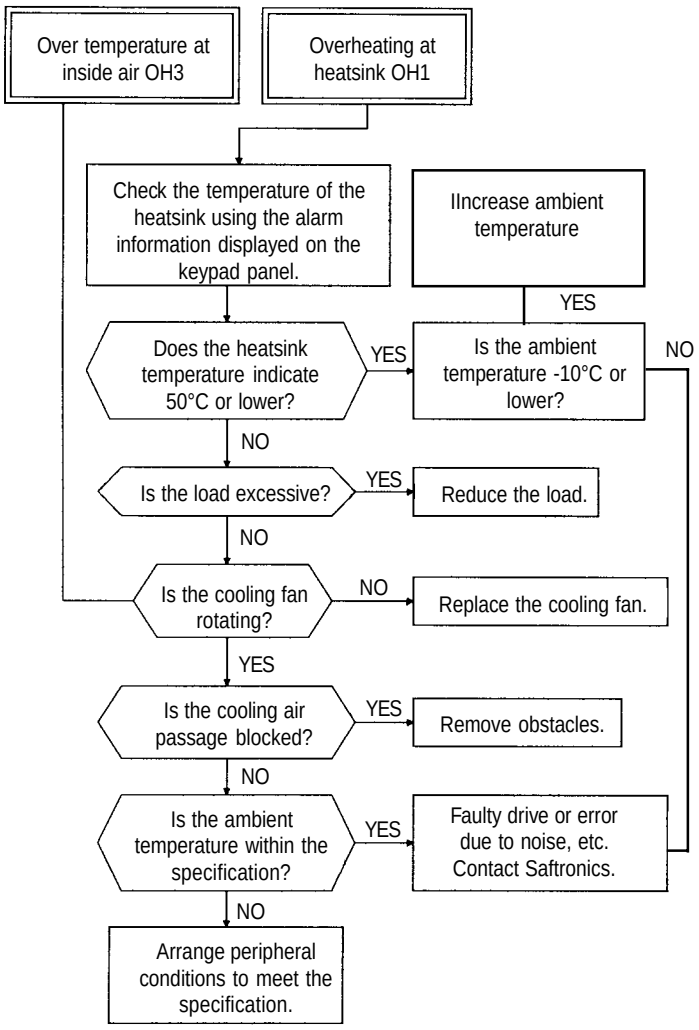

(7) External thermal relay tripped

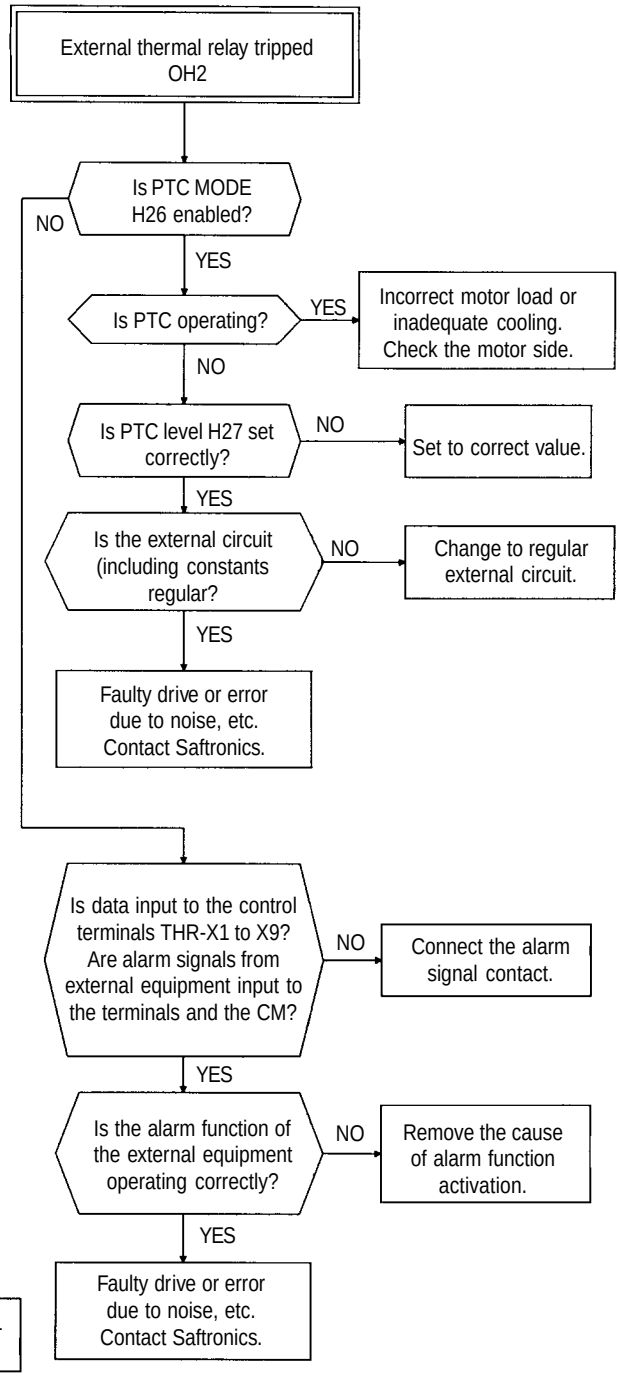

(8) Drive overload and motor overload

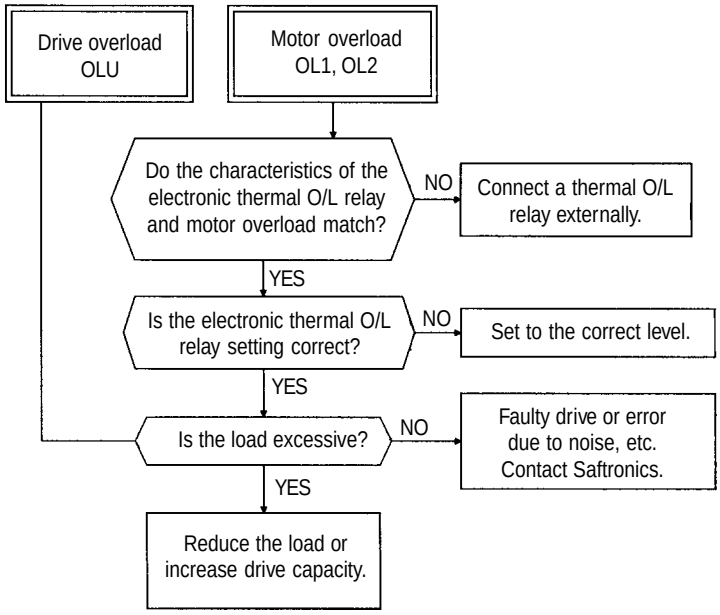

(9) Memory error Er1,
Keypad panel communication error Er2,
CPU error Er3

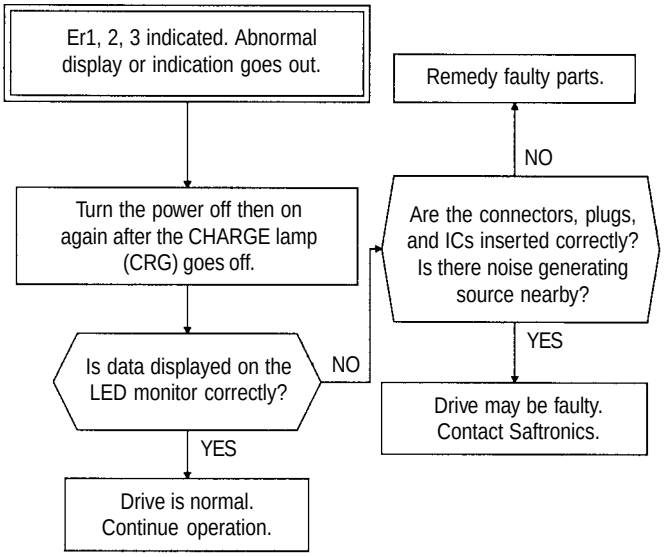

(10) Output wiring error

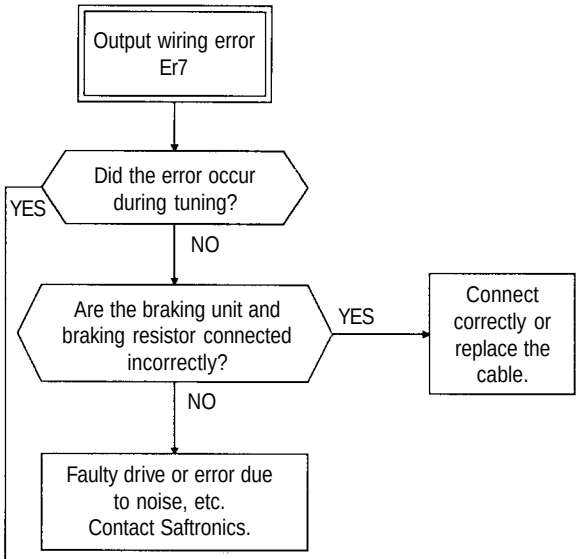

(11) Input Phase/Loss

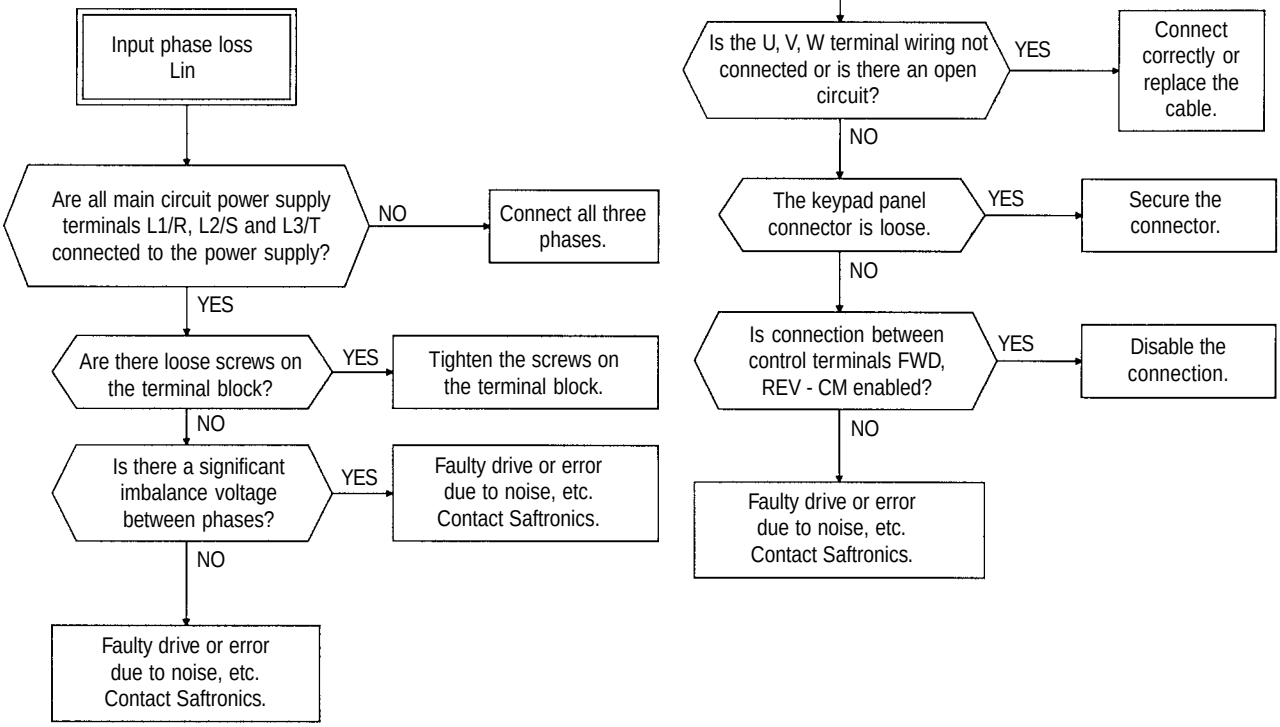

7.2 Abnormal Motor Rotation

(1) If motor does not rotate

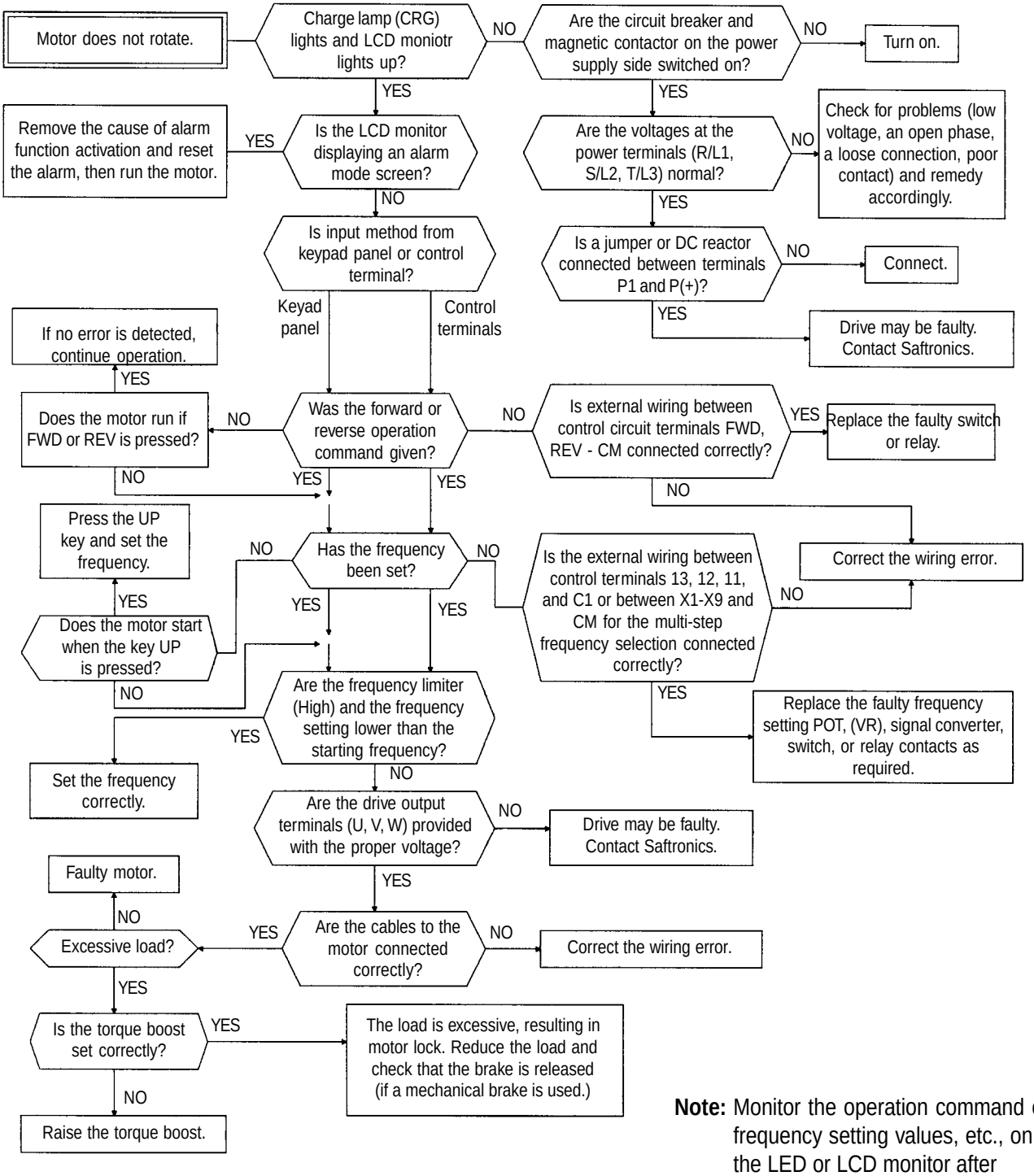

Note: Monitor the operation command or frequency setting values, etc., on the LED or LCD monitor after selecting the respective functions.

The motor does not rotate if the following commands are issued.

- An operation command is issued while the coast-to-stop or DC braking command is output.
- A reverse operation command is issued with the • H08 Rev. phase sequence lock• value set ot 1.

(2) If the motor rotates but the speed does not change

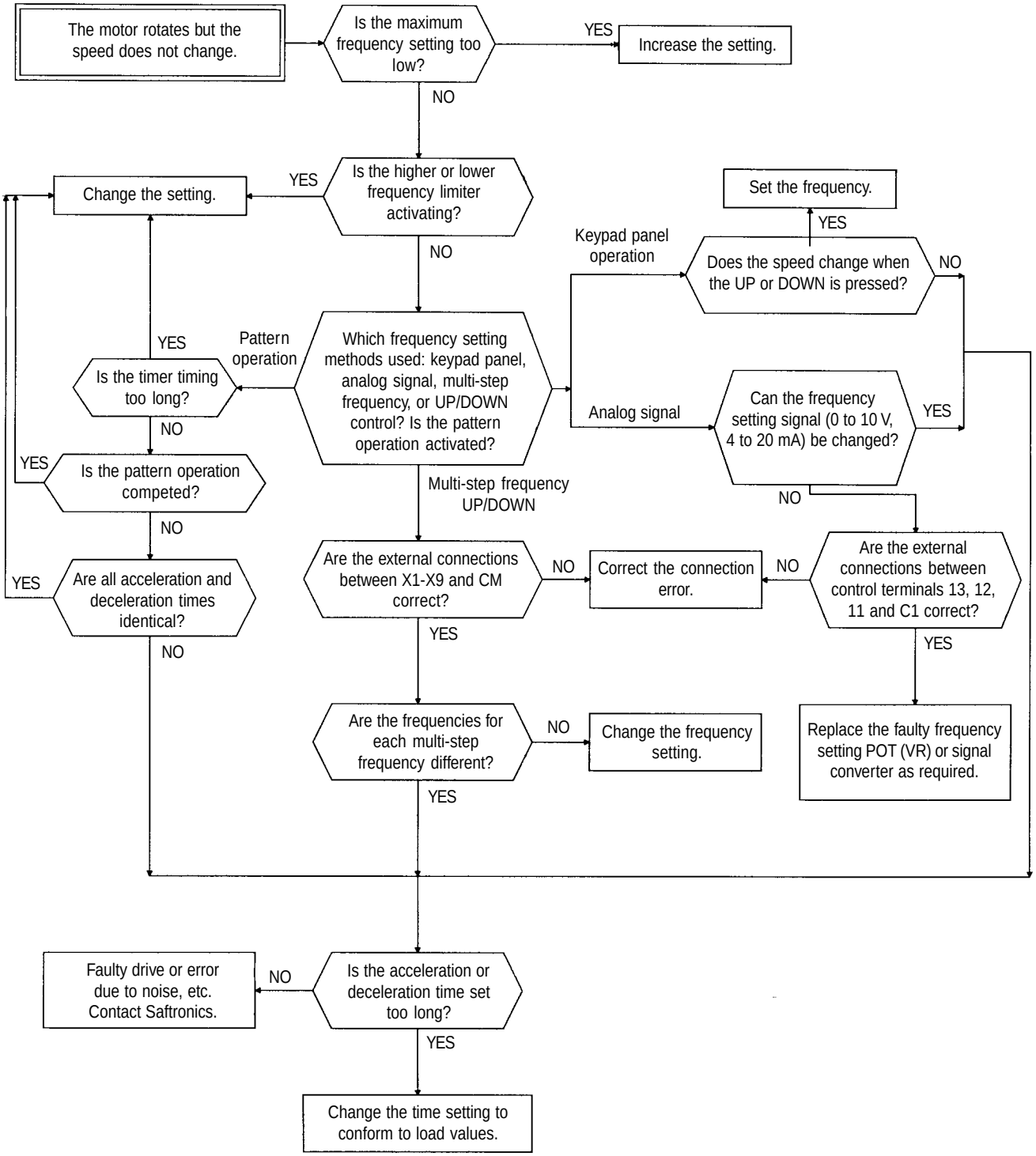

In the following cases, changing the motor speed is also restricted.

- Signals are input from control terminals both 12 and C1 when “F01 Frequency command 1” and “C30 Frequency command 2” are set to 3, and there is no significant change in the added value.
- The load is excessive, and the torque limiting and current limiting functions are activated.

(3) If the motor stalls during acceleration

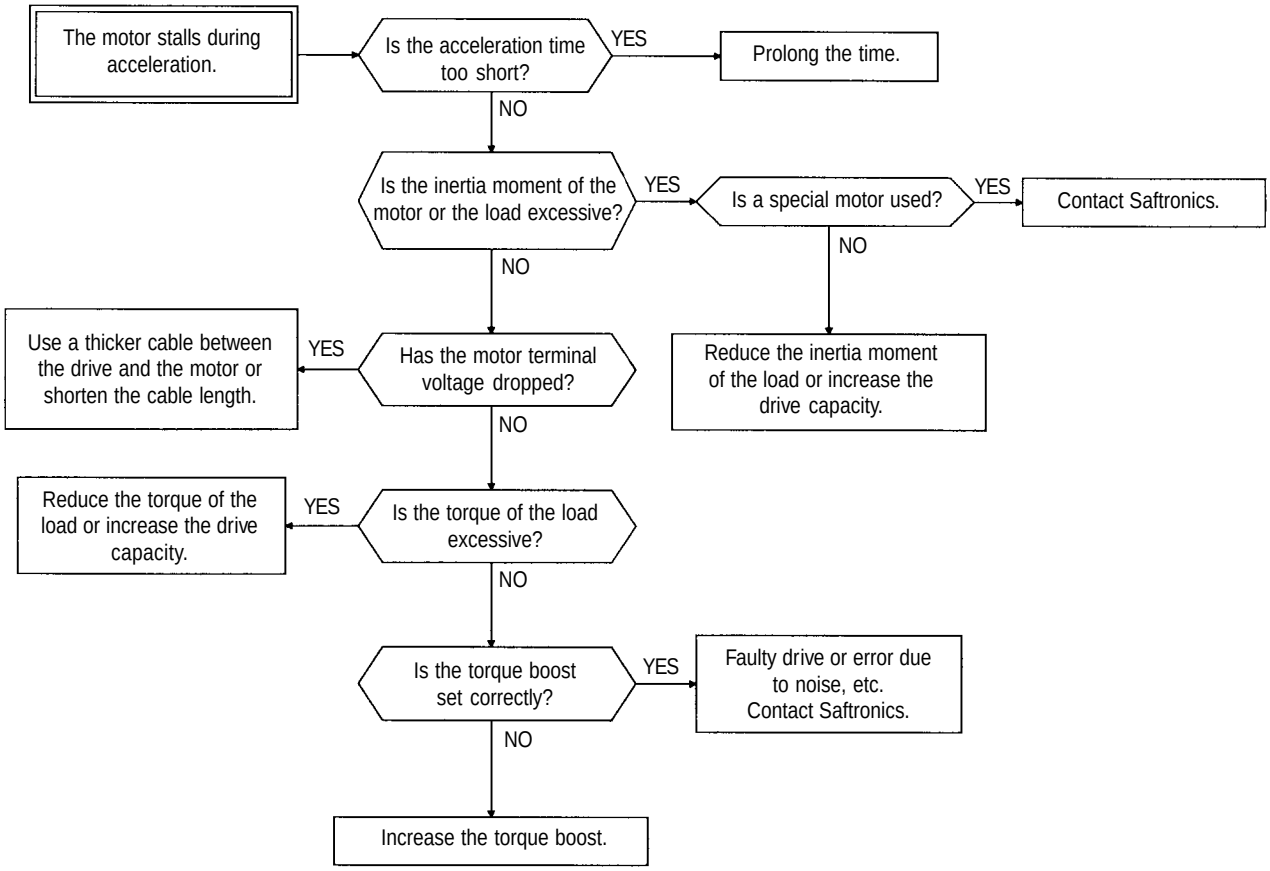

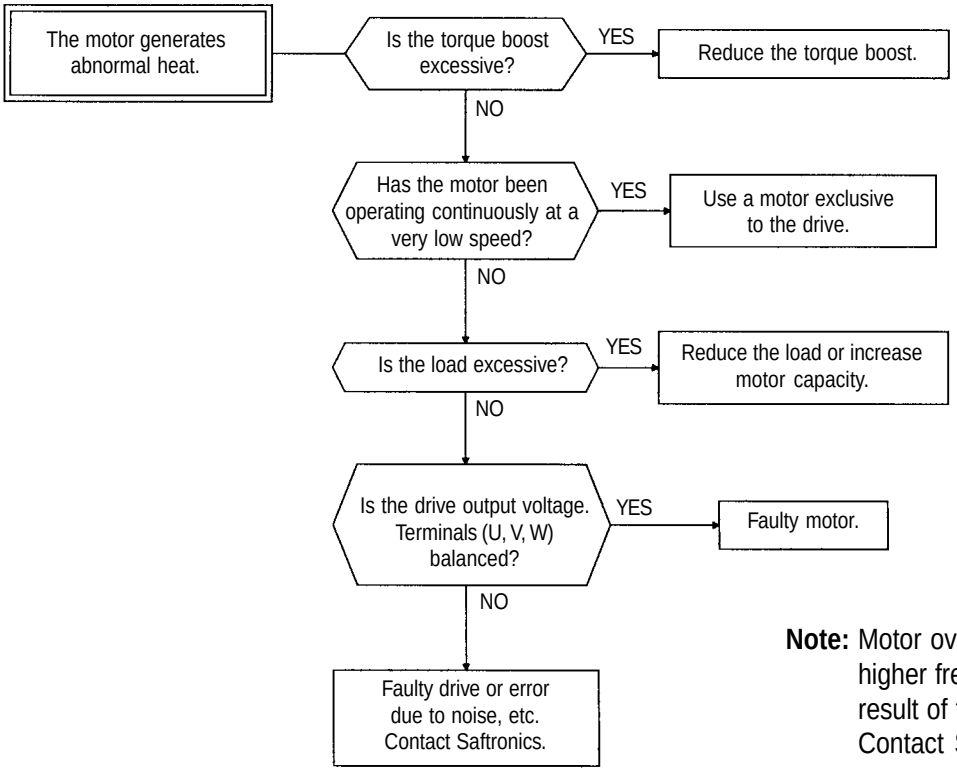

Note: Motor overheating following a higher frequency setting is likely the result of the current wave form. Contact Saftronics.

8. Maintenance and Inspection

Proceed with daily inspection and periodic inspection to prevent malfunction and ensure long-term reliability. Some tips regarding things to look for during these inspections are listed below.

8.1 Daily Inspections

During operation, a visual inspection for abnormal operation can take place externally without removing the covers.

The inspection should cover the following areas:

(1) The performance, according to standard specifications, is as expected.
(2) The environment conforms to standard specifications.
(3) The keypad panel display is normal.
(4) There are no abnormal sounds, vibrations, or odors.
(5) There are no indications of overheating or discoloration.

8.2 Periodic Inspections

Periodic inspections should be made after stopping operations, cutting off the power source, and removing the surface cover.

Note that after turning off the power, the smoothing capacitors in the DC section of the main circuit take time to discharge. To prevent electric shock, confirm with a multimeter that the voltage has dropped below the safety value (25 V DC or below) after the charge lamp (CRG) goes off.

WARNING

- Start the inspection at least five minutes after turning off the power supply for inverters rated at 30 Hp or less. Wait at least ten minutes for inverters rated at 40 Hp or more. Check that the charge lamp (CRG) went off and that the voltage is 25V DC or less between terminals P(+) and N(-). Electric shock may result.
- Only authorized personnel should perform maintenance and component replacement operations. Remove metal jewelry such as watches and rings, and always use insulated tools.
- Never modify the drive. Electric shock or injury may result.

Area to Check		Items to Check	How to inspect	Evaluation Criteria
Environment		1) Check the ambient temperature, humidity, vibration, atmosphere (dust, gas, oil mist, water drops). 2) Is the area surrounding the equipment free of foreign objects.	1) Conduct a visual inspection and use appropriate meters. 2) Visual inspection	1) Results comply with all standard specifications. 2) The area is clear.
Voltage		Are the voltages in the main circuit and the control circuit normal?	Measure with a multi-meter.	Results comply with all standard specifications.
Keypad panel		1) Is the display hard to read? 2) Are the characters complete?	1) Visual inspection 2) Visual inspection	1), 2) The display can be easily read and characters are normal.
Structure (frame or cover)		1) Is there abnormal sound or vibration? 2) Are nuts or bolts loose? 3) Is there deformation or damage? 4) Is there discoloration as a result of overheating? 5) Are there stains or dust?	1) Visual and aural inspection 2) Tighten 3), 4), 5) Visual inspection	1), 2), 3), 4), 5) No abnormalities
Main Circuit	Common	1) Are there loose or missing nuts or bolts? 2) Are there deformations, cracks, damage, or discoloration due to overheating or deterioration in the equipment and insulation? 3) Are there stains and dust?	1) Tighten. 2), 3) Visual inspection	1), 2), 3) No abnormalities Note: Discolorationof the bus bar does not indicate a problem.
	Conductors and wiring	1) Is there discoloration or distortion of a conductor due to overheating? 2) Are there cracks, crazing or discoloration of the cable sheath?	1), 2) Visual inspection	1), 2) No abnormalities
	Terminal block	Is there damage?	Visual inspection	No abnormalities
	Smoothing capacitor	1) Is there electrolyte leakage, discoloration, crazing, or swelling in the case? 2) Is the safety valve not protruding, or are valves protruding too far? 3) Measure the capacitance if necessary.	1), 2) Visual inspection 3) *Estimate life expectancy from maintenance information and from measurements using capacitance measuring equipment.	1), 2) No abnormalities 3) Capacitance is within 85% of initial value
	Resistor	1) Is there any unusual odor or damage to the insulation by overheating? 2) Is there an open circuit?	1) Visual and olfactory inspection 2) Conduct a visual inspection or use a multi-meter by removing the connection on one side.	1) No abnormalities 2) Less than about ±10% of the indicated resistance value
	Transformer and reactor	Is there abnormal buzzing or an unpleasant smell?	Aural, olfactory, and visual inspection	No abnormalities
	Magnetic conductor and relay	1) Is there a rattling noise during operation? 2) Are the contacts rough?	1) Aural inspection. 2) Visual inpection.	1), 2) No abnormalities
Control Circuit	Control PC board and connector	1) Are there any loose screws or connectors? 2) Is there an unusual odor or discoloration? 3) Are there cracks, damage, deformation, or excessive rust? 4) Is there electrolyte leakage or damage to the capacitor?	1) Aural inspection. 2) Visual and olfactory inspection 3) Visual inspection 4) *Estimate life expectancy by visual inspection and maintenace information	1), 2), 3), 4) No abnormalities
Cooling System	Cooling fan	1) Is there abnormal sound or vibration? 2) Are nuts or bolts loose? 3) Is there discoloration due to overheating?	1) Aural and visual inspection. Turn manually (confirm the poewr is off). 2) Tighten. 3) Visual inspection 4) *Estimate life expectancy by maintenance information	1) The fan must rotate smoothly. 2), 3) No abnormalities
	Ventilation	Is there foreign matter on the heat sink or intake and exhaust ports?	Visual inspection	No abnormalities

See additional notes on following page.

Note: If equipment is stained, wipe with a clean cloth. Use a vacuum to remove dust. *Estimate of life expectancy based on maintenance information.

The maintenance information is stored in the drive keypad panel. It indicates the electrostatic capacitance of the main circuit capacitors and the life expectancy of the electrolytic capacitors on the control PC board and the cooling fans. Use this data as the basis to estimate the life expectancy of parts.

1) Determining the capacitance of the main circuit capacitors

This drive is equipped with a function to automatically indicate the capacitance of the capacitors installed in the main circuit when powering up the drive after disconnecting the power according to the prescribed conditions.

The initial capacitance values are set in the drive when shipped from the factory, and the decrease ratio (%) to those values can be displayed.

Use this function as follows:

(1) Remove any option boards from the inverter. Disconnect the DC bus connections to the main circuit [Terminals P(+) and N(-)] from the braking unit or other inverters, if connected. The power factor correcting reactor (DC reactor) does not need be disconnected.

A power supply introduced to the auxiliary input [Terminals R0, T0] that provides control power should be isolated.

(2) Disable all the digital inputs (FWD, REV, X1-X9) on the control terminals. Also disconnect RS485 serial communication, if used.

Turn on the main power supply. Confirm that the cooling fan is rotating and that the inverter is not operating. (There is no problem if the "OH2 External thermal relay tripped" function is activated by the digital input terminal.)

(3) Turn the main power off.

(4) Turn on the main power again after verifying that the charge lamp is completely off.

(5) Open the maintenance information on the keypad panel and confirm the capacitance values of the built-in capacitors.

2) Life expectancy of the PC control board

The actual capacitance of a capacitor is not measured in this case. However, the integrated operating hours for the control power supply, multiplied by the life expectancy coefficient as defined by the temperature inside the inverter, will be displayed. Hence, the hours displayed may not agree with the actual operating hours, depending on the operational environment.

Since the integrated hours are counted in unit hours, power input for less than one hour will be disregarded.

3) Life expectancy of cooling fan

The integrated operating hours of the cooling fan are displayed. Since the integrated hours are counted in unit hours, power input for less than one hour will be disregarded.

The displayed value should be considered a rough estimate because the actual life of a cooling fan is influenced significantly by the temperature.

Table 8..-2 Rough estimate of life expectancy using maintenance information

Parts	Recommended Level
Capacitor in main circuit	85% or less of the initial value
Electrolytic capacitor on control PC board	61,000 hours
Cooling fan	40,000 hours (5 Hp or less), 25,000 hours (Over 7.5 Hp)*

* Estimated life expectancy of a ventilation-fan at inverter ambient temperature of 40°C

8.3 Main Circuit Measurements

The indicated values depend on the type of meter, because the harmonic component is included in the voltage and current of the main circuit power (input) and the output (motor) side of the inverter. If measuring with a meter for commercial power frequency use, use the meters shown in Table 8.3.1.

The power factor cannot be measured using power factor meters currently available on the market, which measure the phase difference between voltage and current. If power factors must be measured, measure the power, voltage, and current on the input side and output side, then calculate the power factor using the following formula:

$$\text{Power factor} = \frac{\text{Power [W]}}{\sqrt{3} \times \text{Voltage [V]} \times \text{Current [A]}} \times 100\ [\%]$$

Table 8.3-. Meters for Measuring Main Circuit

Item	Input (power supply) Side			Output (motor) Side			DC Link Circuit Voltage P(+) - N(-)
	Voltage / Current			Voltage / Current			
Meter name	Ammeter AR,S,T	Voltmeter VR,S,T	Powermeter WR,S,T	Ammeter AU,V,W	Voltmeter VU,V,W	Powermeter WU,V,W	DC Voltmeter V
Meter type	Moving iron type	Rectifier or moving-iron type	Digital power meter	Moving iron type	Rectifier type	Digital power meter	Moving coil type
Symbol							

Note: If the output voltage is measured with a rectifier type meter, an error may occur. Use a digital AC power meter to ensure accuracy.

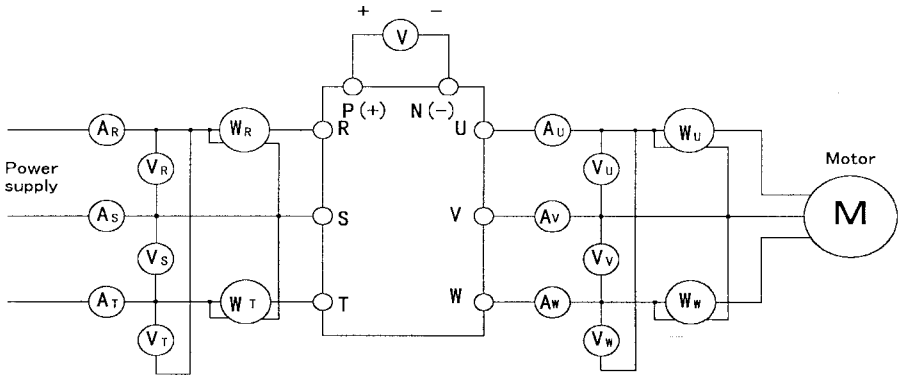

8.4 Insulation Test

Avoid megger testing on an drive since an insulation test was completed at the factory. If a megger test must be completed, proceed as described below. Incorrect testing methods may result in product damage.

If the specifications for the dielectric strength test are not followed, the drive may be damaged. If a dielectric strength test must be completed, contact your local distributor or nearest Fuji Electric sales office.

(1) Megger test for the main circuit

1. Use a 500V DC megger and isolate the main power before starting measurement.
2. If the test voltage is connected to the control circuit, remove all connection cables to the control circuit.
3. Connect the main circuit terminals using common cables, as shown in Fig. 8-4-1.
4. Perform the megger test only between the common cables connected to the main circuit and ground (Terminal ⏚).
5. A megger indicating 5M Ohm or more is normal. (This is the value measured with only the drive connected.)

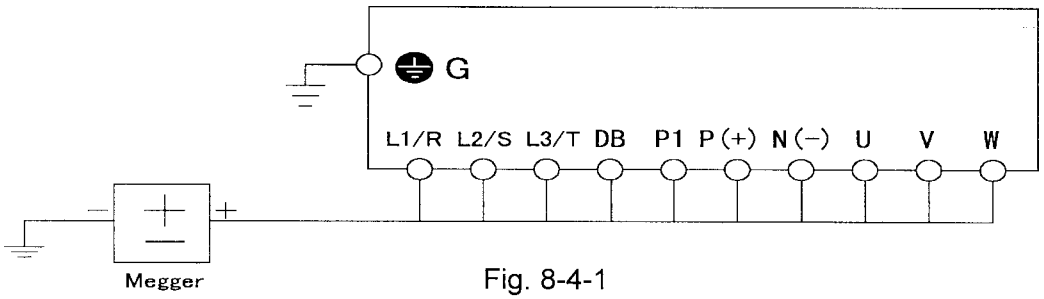

Fig. 8-4-1
Megger test

(2) Insulation test in the control circuit

Megger and dielectric strength tests are not performed on the control circuit. Use a resistance multimeter with a high resistance range to check the control circuit.

1. Remove all external cables from the control circuit terminals.
2. Conduct a continuity test between grounds. A result of 1M Ohm or more is normal.

(3) Exterior main circuit and sequence control circuit

Remove all cables from drive terminals to ensure that test voltage is not applied to the drive.

8.5 Replacement Parts

The life expectancy of a part depends on the type of part, the environment, and operating conditions. Parts should be replaced as shown in Table 8-5-1.

Table 8-5-1 Part replacement

Part name	Standard period for replacement	Comments
Cooling fan	3 years	Exchange for a new part
Smoothing capacitor	5 years	Exchange for a new part (determine after checking
Electrlytic capacitor on the PC board	7 years	Exchange for a new PC board (determine after checking)
Fuse	10 years	Exchange for a new part
Other parts	—	Determine after checking

9. Warranty Parts and Service

The purpose of this section is to provide specific instructions to the user of the standard drive referenced in this book regarding warranty administration and how to obtain assistance on both in-warranty and out-of-warranty equipment.

For all warranty procedures, refer to section 10 of this instruction manual to identify the part or assembly.

If assistance is required to determine warranty status, identify defective parts, or obtain the name of your local distributor, call:

Saftronics, Inc.

Technical Support
5580 Enterprise Parkway
Ft. Myers, FL 33905
Phone: 941-693-7200
Fax: 941-693-2431

Before calling the number at left to determine warranty status, the drive serial number will be required. This is located on the drive nameplate. If the drive is still under warranty, further information will be required per the "In-Warranty Failure Checklist" shown on page 9-2 of this instruction manual. Please complete and return the Warranty Registration Card located inside back cover.

OUT-OF WARRANTY PROCEDURES

When the defective part has been identified, contact your local authorized Saftronics drives distributor to order replacement parts.

IN-WARRANTY FAILURE CHECKLIST

To assist with warranty troubleshooting, the following information is required. This data is needed to evaluate the cause in an effort to eliminate any further failures.

Model No.: _____

Serial No.: _____

Start-Up Date: _____

Failure Date: _____

Status When Failure Occurred (check one):

Power-Up _____ Running _____ Accel _____ Decel _____

Explanation of Failure _____

Application Information (check Yes or No)

Input Transformer: Yes _____ No _____

If Yes: KVA _____

L1 Volts _____ L2 Volts _____ L3 Volts _____

Power Factor Correction Capacitors: Yes _____ No _____

If Yes: Microfarrad _____

Other Equipment on Same Power Yes _____ No _____

If Yes, what?

Line Reactor on Input Yes _____ No _____

Input Starter Yes _____ No _____

Output Starter Yes _____ No _____

Motor Overloads Yes _____ No _____

Control Terminals Used (circle if used)

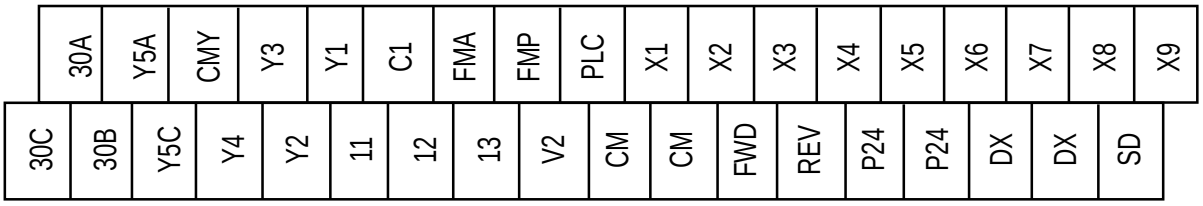

Function Codes Different From Factory Settings

Function Code	Setting	Function Code	Setting

Failure Message (see Section 4)

Latest Fault _____ Previous Faults: No Message _____

Hz _____ 1. _____

A _____ 2. _____

V _____ 3. _____

After all of the Checklist information is acquired, contact the following number for assistance: (941) 693-7200

When returning failed parts, reference the RMA# on the shipping documents that came with the replacement parts and ship failed parts to: Saftronics. Mark RMA# on carton.

10. Replacement Parts

Catalog No.	Rating	Drive HP & Quantity per drive											
		1/4	1/2	1	2	3	5	7.5	10	15	20	25	30
GP10 230VAC, 30HP and Below													
Main Control Card													
SG11CPCBB1		1	1	1	1	1	1	1	1	1	1	1	1
Gate Driver & Power Supply Card													
SG11PPCBG2002		1											
SG11PPCBG2004			1										
SG11PPCBG2008				1									
SG11PPCBG2015					1								
SG11PPCBG2022						1							
SG11PPCBG2037							1						
SG11PPCBG2055								1	1				
SG11PPCBG2075										1			
SG11PPCBG2110											1		
SG11PPCBG2150												1	
SG11PPCBG2185													1
KEYPAD PANEL (Only one type per drive)													
STPAG11S	NEMA Type1	1	1	1	1	1	1	1	1	1	1	1	1
STPAG11S4	NEMA Type4	1	1	1	1	1	1	1	1	1	1	1	1
CAPACITOR UNIT		*	*	*									
SG11CAP01	PCB				1								
SG11CAP02	PCB					1							
SG11CAP03	PCB						1						
SG11CAP09	2700μFx1							1	1		2		
SG11CAP10	3900μFx1									1		2	
SG11CAP11	4700μFx2												2
	* Located on Gate drive & Power supply Card												
FAN													
SG11FAN01					1	1	1						
SG11FAN202								1	1	1	2	2	2
POWER MODULE		*	*	*									
SPS11046	30A 600V				1	1							
SPS11047	50A 600V						1						
S6MBP75RS060	75A 600V							1	1				
S6MBP100RS060	100A 600V									1			
S6MBP150RS060	150A 600V										1	1	
S6MBP200RS060	200A 600V												1
	* Located on Gate drive & Power supply Card												
RECTIFIER MODULE		*	*	*	*	*	*						
SPVC758	75A 800V							1	1	1			
SCLK120AA80	120A 800V										1	1	
SCLK180AA80	180A 800V												1
	* Located on Gate drive & Power supply Card												
CHARGE RESISTOR		*	*	*	*	*	*						
S30W66	30W 6.6WJ							1	1	1			
S80W25	80W 2.5WJ										1	1	1
	* Located on Gate drive & Power supply Card												
FRONT COVER													
SG11UPCG008P		1	1	1									
SG11UPCG040P					1	1	1						
SG11UPCG075P								1	1	1			
SG11UPCG220P											1	1	1
INTERNAL DB RESISTOR													
SG11DBR0082	100W 40W	1	1	1									
SG11DBR0372	40W 80W				1	1	1						
SG11DBR0752								1	1				

Catalog No.	Rating	Drive HP & Quantity per drive						
		40	50	60	75	100	125	150
GP10 230 VAC, 40HP and Above								
Main Control Card								
SEP4113B1		1	1	1	1	1	1	1
Gate Driver & Power Supply Card								
SEP3956C1		1	1					
SEP3956C2				1				
SEP3956C3					1	1		
SEP3957C1							1	
SEP3957C2								1
KEYPAD PANEL								
STPAG11S4		1	1	1	1	1	1	1
DC CAPACITOR								
SLNT2G302MSMAFF	400V 3000µF	4	4					
SHCGHA2G362N3K	400V 3600µF			4				
SHCGHA2G452NE3K	400V 4500µF				4			
SHCGHA2G592N3K	400V 5900µf					4	5	6
FAN								
SFBA09A24H1B0		1	1	1	2	2	2	4
(Standard)								
S4715PS22TB30		2	2					
2750MTP15				2	2		3	4
S6250MG1	80W 7.5ohm					2		
(For NEMA12 Heatsink)								
SUHS4556MLOT1		2	2					
S2750MTP15OT1				2	2		3	4
SU6250MKG1LTPOT1						2		
IGBT MODULE								
S2MBi300NB060		3	3					
SCM400DU12H206				3				
S2MBi300NB06001					6	6	9	12
RECTIFIER MODULE								
SPD1008AC		3	3	6	6	9	9	9
CHARGE RESISTOR								
SHF5C5504		1	1	1	1	1	2	2
DC CONTACTOR								
SFC3UL	AC220VAUX2B	1	1					
SFC1UL	AC220VAUX2B			2	2	2		
SFC4UL	AC220VAUX2B						2	
SSC7NUL	AC200-240V							1
DC FUSE								
SCR2L260UL		1	1	1				
SCR2L400UL					1	1		
SA50P6004							1	1
INPUT MODULE CARD								
SEP3985C1		1	1	1	1	1		
SEP3985C3							1	1

Catalog No.	Rating	Drive HP & Quantity per drive										
		1/2	1	2	3	5	7.5	10	15	20	25	30
GP10 460 VAC, 30HP and Below												
Main Control Card												
SG11CPCBB1		1	1	1	1	1	1	1	1	1	1	1
Gate Driver & Power Supply Card												
SG11PPCBG4004		1										
SG11PPCBG4008			1									
SG11PPCBG4015				1								
SG11PPCBG4022					1							
SG11PPCBG4037						1						
SG11PPCBG4055							1	1				
SG11PPCBG4075									1			
SG11PPCBG4110										1		
SG11PPCBG4150											1	
SG11PPCBG4185												1
KEYPAD PANEL (Only one type per drive)												
STPAG11S	NEMA Type1	1	1	1	1	1	1	1	1	1	1	1
STPAG11S4	NEMA Type4	1	1	1	1	1	1	1	1	1	1	1
CAPACITOR UNIT		*	*									
SG11CAP04	PCB			1								
SG11CAP05	PCB				1							
SG11CAP06	PCB					1						
SG11CAP07	1500μFx2						2	2				
SG11CAP08	2000μFx2								2			
SG11CAP09	2700μFx2									2		
SG11CAP10	3900μFx2										2	
SG11CAP11	4700μFx2											2
	* Located on Gate drive & Power supply Card											
FAN												
SG11FAN01				1	1	1						
SG11FAN02							1	1	1	2	2	2
POWER MODULE		*	*									
SPS12046	15A 1200V			1	1							
SPS12047	25A 1200V					1						
S6MBP50RS120	50A 1200V						1	1	1			
S6MBP75RS120	75A 1200V									1	1	
S6MBP100RS120	100A 1200V											1
	* Located on Gate drive & Power supply Card											
RECTIFIER MODULE		*	*	*	*	*						
SPVC7516	75A 1600V						1	1	1			
SCLK70AA160	70A 1600V									1	1	
SCLK100AA160	100A 1600V											1
	* Located on Gate drive & Power supply Card											
CHARGE RESISTOR		*	*	*	*	*						
S30W200	30W 20WJ						1	1	1			
S80W100	80W 10WJ									1	1	1
	* Located on Gate drive & Power supply Card											
FRONT COVER												
SG11UPCG008P		1	1									
SG11UPCG040P				1	1	1						
SG11UPCG075P							1	1	1			
SG11UPCG220P										1	1	1

Catalog No.	Rating	Drive HP & Quantity per drive																
		40	50	60	75	100	125	150	200	250	300	350	400	450	500	600	700	800
GP10 460VAC, 40HP and Above																		
Main Control Card																		
SEP4113B1		1	1	1	1	1	1	1	1	1	1	1	1	1	1	1	1	1
Gate Driver & Power Supply Card																		
SEP3959C1		1	1															
SEP3959C2				1														
SEP3959C3					1	1												
SEP3959C4							1											
SEP3959C5								1	1									
SEP3957C3										1	1							
SEP3957C4												1	1	1				
SEP3957C5															1	1	1	1
GATE DRIVE AMPLIFIER CARD																		
SEP4142															3	3	3	3
KEYPAD PANEL																		
STPAG11S4		1	1	1	1	1	1	1	1	1	1	1	1	1	1	1	1	1
DC CAPACITOR																		
SLNT2G302MSMAFF	400V 3000µF	4	4															
SHCGHA2G362N3K	400V 3600µF			4														
SHCGHA2G452NE3K	400V 4500µF				4			6										
SHCGHA2G592N3K	400V 5900µf					4	4		6	8		12						
SHCGHA2G742N3K	400V 7400µF										8		12	12				
SHCGHA2G932N3KG	400V 9300µF														20	20	26	26
FAN UNIT																		
SFBA09A24H1B0		1	1	1	1	1	2	2	2	3	3	4	4	4	4	4		
SMRS18-DUL															3	3	4	4
STHB1-UHS4556M																	4	4
S(Standard)																		
S4715PS22TB30		2	2															
S2750MTP15				2	2			3	3									
S6250MG1						2	2			3	3	4	4	4				
(For NEMA12 Heatsink)																		
SUHS4556MLOT1		2	2															
S2750MTP15OT1				2	2			3	3									
SU6250MKG1LTPOT1						2	2			3	3	4	4	4				
IGBT MODULE																		
S2MBi150PC14002		3	3															
SCM200DU24H203				3														
S2MBi300P14002					3	3												
SCM200DU24H202							6											
S2MBi300P14003								6	6	9	9	12	12	12	18	18	24	24
RECTIFIER MODULE																		
SPD6016A		3	3	3						12	12							
SPD10016A					3	3	6	6	6			12	12	12	24	24	30	30

Catalog No.	Rating	Drive HP & Quantity per drive																
		40	50	60	75	100	125	150	200	250	300	350	400	450	500	600	700	800
GP10 460VAC, 40HP and Above																		
IGBT MODULE																		
S2MBi150PC14002		3	3															
SCM200DU24H203				3														
S2MBi300p14002					3	3												
SCM200DU24H202							6											
S2MBi300P14003								6	6	9	9	12	12	12	18	18	24	24
RECTIFIER MODULE																		
SPD6016A		3	3	3						12	12							
SPD10016A					3	3	6	6	6			12	12	12	24	24	30	30
CHARGE RESISTOR																		
SHF5C5504	80W 7.5ohm	1	1	1	1	1	1	2	2	2	3	3	4	4				
SGRZG400															2	2	2	2
DC CONTACTOR																		
SFC1UL	AC220VAUX2B	1	1	1	1	1	2	2	2									
SFC4UL	AC220VAUX2B									2	2							
SSC7NUL	AC200-240V											1						
SSC8NUL	AC200-240V												1	1				
SSCN8	AC200-240V														2	2	2	2
DC FUSE																		
SCR6L150UL	600V 150A	1	1	1														
SCR6L200UL	600V 200A				1													
SCR6L300UL	600V 300A					1	1											
SA70Q4004								1	1									
SA70Q5004										1								
SA70Q6004											1	1						
SA70QS8004													1	1				
SA70P16004TA															1	1		
SA70P20004																	1	1
TRANSFORMER																		
SHF5C55025512VA		1	1															
SHF5C550312524VA				1	1	1	1											
SHF5B661330016VA								1	1	1	1	1	1	1				
SHF5B395170020VA															1	1	1	1
INPUT MODULE CARD																		
SEP3985C2		1	1	1	1	1	1	1	1									
SEP3985C4										1	1	1	1	1	1	1	1	1

Three-phase 230V series - Variable Torque

Type designation GP10E1ST32_ _ _ ** (NEMA Type1) GP10E2ST32_ _ _ ** (NEMA Type12) GP10E4ST32_ _ _ ** (NEMA Type4) GP10E8ST32_ _ _ ** (Open, Type 12 Heatsink) GP10E9ST32_ _ _ ** (Open) ** Indicates product revision			F25	F50	001	002	003	005	007	010	015	020	025	030	040	050	060	075	100	125	150
Nominal 230V system applied mot		HP	/41	1/2	1	2	3	5	7.5	10	15	20	25	30	40	50	60	75	100	125	150
Output ratings	Rated Capacity *1)	kVA	0.59	1.1	1.9	3.1	4.3	6.7	8.7	11	16	21	26	31	45	57	71	85	112	137	165
	Rated Voltage *2)	V	3-phase, 200V /50Hz; 200V ,220V ,230V /60Hz																		
	Rated Current *3)	A	1.5	3.0	5.0	8.0	11	17	22	29	42	55	67	78	115	145	180	215	283	346	415
	Overload Capability		110% of rated current for 1min																		
	Rated Frequency	Hz	50, 60Hz																		
Input rating	Phases, Voltage, Frequency Voltage / frequency variations		3-phase, 200 to 230V , 50/60Hz -Voltage : +10 to -15% (Voltage unbalance *5) : 2% or less												3-phase, 200 to 220V /50Hz , 200 to 230V /60Hz -Frequency :+5 to -5%						
	Momentary voltage dip capability *6)		When the input voltage is 165V or more, the inverter can be operated continuously. If the AC Line voltage is below rated, the drive will not provide the 15ms ride-thru. The smooth recovery method is selectable.																		
Output frequency	Setting	Maximum Freq.	50 to 120Hz																		
		Base Freq.	25 to 120Hz																		
		Starting Freq.	0.1 to 60Hz , Continuous time : 0.0 to 10.0s																		
		Carrier Freq. *8)	0.75 to 15kHz The minimum carrier frequency changes depend on maximum output frequency.												0.75 to 10kHz					0.75 to 6kHz	
	Accuracy (Stability)		-Analog setting : ±0.2% of Maximum frequency (at 25 ±10 degrees C) -Digital setting : ±0.01% of Maximum frequency (at -10 to +50 degrees C)																		
	Setting resolution		-Analog setting : 1/3000 of Maximum frequency ex.) 0.02Hz at 60Hz , 0.04Hz at 120Hz -Digital setting : 0.01Hz at Maximum frequency of up to 99.99Hz (0.1Hz at Maximum frequency of 100Hz and above) -Link setting :Two methods are selectable. 1/20000 of Maximum frequency ex. 0.003Hz at 60Hz 0.01Hz (Fixed)																		
Control	Volt/Freq Characteristic		80 to 240V (with AVR control) at base and maximum frequency, adjustable																		
	Torque boost														Constant torque load					Variable torque load	
			Automatic (setting code)												0.0					-	
			Manual (setting code)												2.0 to 20.0					0.1 to 1.9	
Enclosure			NEMA Type1, Type4												NEMA Type1, Type12					Open, Open with NEMA Type 12 Heatsink, NEMA 1	
Cooling method			Natural												Fan cooling						
Standards			-UL/cUL -LOW VOLTAGE directive -EMC directive -IEC 61800-2 (Rating, specifIcations for low voltage adjustable frequency a.c. power drive systems) -IEC 61800-3 (EMC product standard including specific test methods)																		

NOTES

*1) Inverter output capacity [kVA] at 230V.

*2) Output voltage is proportional to the power supply voltage and can't exceed the power supply voltage.

*3) Current derating may be required in case of low impedance load such as high frequency motor.

*5) Reference to the IEC 61800-3(5.2.3)

$$\text{Unbalance in power supply voltage [\%]} = \frac{\text{(Maximum voltage[V] - Minimum voltage[V])}}{\text{3-phase averaging voltage[V]}} \cdot 100 \text{ [\%]}$$

*6) 85% load

*8) If carrier frequency is set at more than 10kHz and an overheat condition (detected by internal thermal sensor) occurs, drive will automatically reduce carrier frequency to 8kHz , in order to avoid trip. (Available up to 30HP unit)

Three-phase 460V series - Variable Torque

Type designation GP10E1ST34___** (NEMA Type1) GP10E2ST34___** (NEMA Type12) GP10E4ST34___** (NEMA Type 4) GP10E8ST34___** (Open, Type 12 Heatsink) GP10E9ST34___** (Open)			F50	001	002	003	005	007	010	015	020	025	030	040	050	060	075	100	125	150	200	250	300	350	400	450	500	600	700	800
Norminal 460V system applied motor		HP	1/2	1	2	3	5	7.5	10	15	20	25	30	40	50	60	75	100	125	150	200	250	300	350	400	450	500	600	700	800
	Rated Capacity *1)	kVA	1.1	1.9	2.9	4.3	7.1	9.9	13.1	18.3	23.9	29.4	35.0	47	59	72	89	119	140	167	242	242	300	330	386	414	578	590	669	765
	Rated Voltage *2)	V	3-phase, 380V , 400V , 415V /50Hz , 380V , 400V , 440V , 460V /60Hz																										
	Rated Current *3)	A	1.5	2.5	3.7	5.5	9.0	12.5	16.5	23	30	37	44	60	75	91	112	150	176	210	304	304	377	415	485	520	650	740	840	960
	Overload Capability		110% of rated current for 1min ,											110% of rated current for 1min ,															
	Rated Frequency	Hz	50, 60Hz																										
Input ratings	Phases, Voltage, Frequency		3-phase, 380 to 480V , 50/60Hz											3-phase, 380 to 440V /50Hz , 380 to 480V /60Hz * 380V/50Hz and 380 to 415V/60Hz *4)																
	Voltage / frequency variations		-Voltage : +10 to -15% (Voltage unbalance *5) : 2% or less -Frequency :+5 to -5%																										
	Momentary voltage dip capability *6)		When the input voltage is 310V or more, the inverter can be operated continuously. If the AC Line voltage is below rated, the drive will not provide the 15ms ride-thru. The smooth recovery method is selectable.																										
Output frequency	Setting	Maximum Freq.	50 to 120Hz																										
		Base Freq.	25 to 120Hz																										
		Starting Freq.	0.1 to 60Hz , Continuous time : 0.0 to 10.0s																										
		Carrier Freq. *8)	0.75 to 15kHz The minimum carrier frequency changes depend on maximum output frequency.											0.75 to 10kHz					0.75 to 6kHz										
	Accuracy (Stability)		-Analog setting : ±0.2% of Maximum frequency (at 25 ±10 degrees C) -Digital setting : ±0.01% of Maximum frequency (at -10 to +50 degrees C)																										
	Setting resolution		-Analog setting : 1/3000 of Max. frequency ex.) 0.02Hz at 60Hz , 0.04Hz at 120Hz -Digital setting : 0.01Hz at Maximum frequency of up to 99.99Hz (0.1Hz at Maximum frequency of 100Hz and above) -Link setting : Two methods are selectable. 1/20000 of Maximum frequency ex. 0.003Hz at 60Hz 0.01Hz (Fixed)																										
Control	Volt/Freq Characteristic		320 to 480V (with AVR control) at base and maximum frequency, adjustable																										
	Torque boost													Constant toruque load					Variable torque load										
			Automatic (setting code) : 0.0 -																										
			Manual (setting code) : 2.0 to 20.0 0.1 to 1.9																										
Enclosure			NEMA Type1, Type 4											NEMA Type1, Type12					Open, Open with NEMA Type 12 Heatsink, NEMA Type 1										
Cooling method			Natural											Fan cooling															
Standards			-UL/cUL -LOW VOLTAGE directive -EMC directive -IEC 61800-2 (Rating, specifications for low voltage adjustable frequency a.c. power drive systems) -IEC 61800-3 (EMC product standard including specific test methods)																										

NOTES
*1) Inverter output capacity [kVA] at 460V.
*2) Output voltage is proportional to the power supply voltage and can't exceed the power supply voltage.
*3) Current derating may be required in case of low impedance load such as high frequency motor.
*4) Change the tap of auxiliary transformer.
380V/50Hz and 380 to 415V/60Hz : Change over CN UX connector from U1 part to U2 part. (Reference to the Instruction manual)

Input voltage	CN UX connector
400 to 440V/50Hz, 440 to 480V/60Hz	U1 (Factory setting)
380V/50Hz (398V or smaller), 380 to 415V/60Hz (430V or smaller)	U2

*5) Reference to the IEC 61800-3(5.2.3)

$$\text{Unbalance in power supply voltage [\%]} = \frac{\text{(Maximum voltage[V] - Minimum voltage[V])}}{\text{3-phase averaging voltageV}} - 100 \text{ [\%]}$$

*6) 85% load
*8) If carrier frequency is set at more than 10kHz and an overheat condition (detected by internal thermal sensor) occurs, drive will automatically reduce carrier frequency to 8kHz , in order to avoid trip. (Available up to 30HP unit)

Three-phase 230V series - Constant Torque

Type designation (* * indicate product revision) GP10E1ST32_ _ _* * (NEMA Type1) GP10E2ST32_ _ _* * (NEMA Type12) GP10E4ST32_ _ _* * (NEMA Type4) GP10E8ST32_ _ _* * (Open, Type 12 Heatsink) GP10E9ST32_ _ _* * (Open)			F25	F50	001	002	003	005 007	010	015	020	025	030	040	050	060	075	100	125	150
Nominal 230V system pplied moto		HP	1/4	1/2	1	2	3	5	7.5	10	15	20	25	30	40	50	60	75	100	125
Output ratings	Rated Capacity *1)	kVA	0.59	1.1	1.9	3.1	4.3	6.7	9.9	13	18	23	29	34	45	57	71	85	112	137
	Rated Voltage *2)	V	3-phase, 200V /50Hz , 200V ,220V ,230V /60Hz																	
	Rated Current *3)	A	1.5	3.0	5.0	8.0	11	17	25	33	46	59	74	87	115	145	180	215	283	346
	Overload Capability		150% of rated current for 1min , 200% of rated current for 0.5s												150% of rated current for 1min , 180% of rated current for 0.5s					
	Rated Frequency	Hz	50, 60Hz																	
Input ratings	Phases, Voltage, Frequency		3-phase, 200 to 230V , 50/60Hz												3-phase, 200 to 220V /50Hz, 200 to 230V /60Hz * 220 to 230V /50Hz *4),					
	Voltage / frequency variations		-Voltage : +10 to -15% (Voltage unbalance *5) : 2% or less) -Frequency :+5 to -5%																	
	Momentary voltage dip capability *6)		When the input voltage is 165V or more, the inverter can be operated continuously. When the input voltage drops below 165V from rated voltage, the inverter can be operated for 15ms . (within 85% load of nominal applied motors) The smooth recovery method is selectable.																	
Output frequency	Setting	Maximum Freq.	50 to 120Hz *11)																	
		Base Freq.	25 to 120Hz *11)																	
		Starting Freq.	0.1 to 60Hz, Continuous time : 0.0 to 10.0s																	
		Carrier Freq. *8)	0.75 to 15kHz The minimum carrier frequency changes depend on maximum output frequency.												0.75 to 10kHz				0.75 to 6kHz	
	Accuracy (Stability)		-Analog setting : ±0.2% of Maximum frequency (at 25 ±10 degrees C) -Digital setting : ±0.01% of Maximum frequency (at -10 to +50 degrees C)																	
	Setting resolution		-Analog setting : 1/3000 of Maximum frequency ex.) 0.02Hz at 60Hz -Digital setting : 0.01Hz at Maximum frequency of up to 99.99Hz (0.1Hz at Maximum frequency of 100Hz and above) -Link setting : Two methods are selectable. • 1/20000 of Maximum frequency ex.) 0.003Hz at 60Hz • 0.01Hz (Fixed)																	
Control	Volt/Freq Characteristic		80 to 240V (with AVR control) at base and maximum frequency, adjustable																	
	Torque boost									Constant toruque load				Variable torque load						
			Automatic (setting code) : 0.0 -																	
			Manual (setting code) : 2.0 to 20.0 0.1 to 1.9 *9)																	
	Starting torque		200% (with Dynamic torque vector control selected)												180% (with Dynamic torque vector control selected)					
Braking	Standard	Braking torque		150%			100%					20% *10)			15 to 10% *10)					
		Time	s	10	5		5					No limit								
		Duty cycle	%	10	5	3	5	3	2	3	2	No limit								
	Options	Braking torque		150%											100%					
		Time	s	90	45	45	45	30	20			10		8	1 0					
		Duty cycle	%	37	22	18	10	7	5			5		5	10					
	DC injection braking		Starting frequency : 0.1 to 60.0Hz , Braking time : 0.0 to 30.0s , Braking level : 0 to 100% of rated current																	
Enclosure			NEMA Type1, Type4											NEMA Type1, Type12	Open, Open with NEMA Type 12 Heatsink, NEMA 1					
Cooling method			Natural								Fan cooling									
Standards			-UL/cUL -LOW VOLTAGE directive -IEC 61800-2 (Rating, specifications for low voltage adjustable frequency a.c. power drive -EMC directive -IEC 61800-3 (EMC product standard including specific test methods)																	

NOTES
*1) Inverter output capacity [kVA] at 230V.
*2) Output voltage is proportional to the power supply voltage and can't exceed the power supply voltage.
*3) Current derating may be required in case of low impedance load such as high frequency motor.
*4) 220 to 230V/50Hz : Order individually
*5) Reference to the IEC 61800-3(5.2.3)

$$\text{Unbalance in power supply voltage [\%]} = \frac{\text{(Maximum voltage[V] - Minimum voltage[V])}}{\text{3-phase averaging voltage[V]}} \times 100 \quad [\%]$$

*6) Input power : 85%
*8) If carrier frequency is set at more than 10kHz and an overheat condition (detected by internal thermal sensor) occurs,inverter will automatically reduce carrier frequency to 8kHz , in order to avoid trip.(Available up to 30HP unit)
*9) When setting into 0.1,the starting torque gets 50%
*10) With a nominal applied motor.(Average torque when the motor decelerates and stops from 60Hz. It may change according to the motor loss.)
*11) Above 120Hz application, please contact the factory.

Three-phase 460V series-Constant Torque

Type designation (* * indicate product revision) GP10E1ST34_ _ _* * (NEMA Type1) GP10E2ST34_ _ _* * (NEMA Type12) GP10E4ST34_ _ _* * (NEMA Type 4) GP10E8ST34_ _ _* * (Open, Type 12 Heatsink) GP10E9ST34_ _ _* * (Open)			F50	001	002	003	005/007	010	015	020	025	030	040	050	060	075	100	125	150	200	250	300	350	400/450	500	600	700	800
Nominal 460V system applied motor		HP	1/2	1	2	3	5	7.5	10	15	20	25	30	40	50	60	75	100	125	150	200	250	300	350	400	450	500	600
	Rated Capacity *1)	kVA	1.1	1.9	2.9	4.3	7.1	10	14	19	23	31	35	47	59	72	89	119	140	167	201	242	300	330	414	466	518	590
	Rated Voltage *2)	V	3-phase, 380V , 400V , 415V /50Hz , 380V , 400V , 440V , 460V /60Hz																									
	Rated Current *3)	A	1.5	2.5	3.7	5.5	9.0	13	18	24	30	39	45	60	75	91	112	150	176	210	253	304	377	415	520	585	650	740
	Overload Capability		110% of rated current for 1min , 200% of rated current for 0.5s											150% of rated current for 1min , 180% of rated current for 0.5s														
	Rated Frequency	Hz	50, 60Hz																									
Input ratings	Phases, Voltage, Frequency		3-phase, 380 to 480V , 50/60Hz											3-phase, 380 to 440V /50Hz , 380 to 480V /60Hz * 380V/50Hz and 380 to 415V/60Hz *4)															
	Voltage / frequency variations		-Voltage : +10 to -15% (Voltage unbalance *5) : 2% or less) -Frequency :+5 to -5%																									
	Momentary voltage dip capability *6)		When the input voltage is 310V or more, the inverter can be operated continuously. When the input voltage drops below 310V from rated voltage, the inverter can be operated for 15ms . (less than 85% load of nominal applied motors) The smooth recovery method is selectable.																									
Output frequency	Setting	Maximum Freq.	50 to 120Hz *10)																									
		Base Freq.	25 to 120Hz *10)																									
		Starting Freq.	0.1 to 60Hz , Continuous time : 0.0 to 10.0s																									
		Carrier Freq. *8)	0.75 to 15kHz The minimum carrier frequency changes depend on maximum output frequency.										0.75 - 10kHz					0.75 to 6kHz										
	Accuracy (Stability)		-Analog setting : ±0.2% of Maximum frequency (at 25 ±10 degrees C) -Digital setting : ±0.01% of Maximum frequency (at -10 to +50 degrees C)																									
	Setting resolution		-Analog setting : 1/3000 of Max. frequency ex.) 0.02Hz at 60Hz , 0.15Hz at 400Hz -Digital setting : 0.01Hz at Maximum frequency of up to 99.99Hz (0.1Hz at Maximum frequency of 100Hz and above) -Link setting : Two methods are selectable. 1/20000 of Maximum frequency ex.) 0.003Hz at 60Hzz , 0.01Hz at 400H 0.01Hz (Fixed)																									
Control	Volt/Freq Characteristic		320 to 480V (with AVR control) at base and maximum frequency, adjustable																									
	Torque boost													Constant toruque load					Variable torque load								
			Automatic (setting code)											0.0					-									
			Manual (setting code)											2.0 to 20.0					0.1 to 1.9 *9)									
	Starting torque		200% (with Dynamic torque vector control selected)																180% (with Dynamic torque vector control selected)									
Braking	Standards	Braking torque	150%				100%						20% *11)												15 to 10% *11)			
		Time s	5				5						No limit															
		Duty cycle %	5	3	5	3	2	3	2	No limit																		
	Options	Braking torque	150%																100%									
		Time s	45		45		30	20		10			8	1	0													
		Duty cycle %	22		10		7	5		5			5	10														
	DC injection braking		Starting frequency : 0.1 to 60.0Hz , Braking time : 0.0 to 30.0s, Braking level : 0 to 100% of rated current																									
Enclosure			NEMA Type1, Type 4										NEMA Type1, Type12	Open, Open with NEMA Type 12 Heatsink, NEMA Type 1														
Cooling method			Natural				Fan cooling																					
Standards			-UL/cUL -LOW VOLTAGE directive -IEC 61800-2 Rating, specifications for low voltage adjustable frequency a.c. power drive systems) -EMC directive -IEC 61800-3 (EMC product standard including specific test methods)																									

NOTES

*1) Inverter output capacity [kVA] at 460V.
*2) Output voltage is proportional to the power supply voltage and can't exceed the power supply voltage.
*3) Current derating may be required in case of low impedance load such as high frequency motor.
*4) Change the tap of auxiliary transformer.
380V/50Hz and 380 to 415V/60Hz : Change over CN UX connector from U1 part to U2 part. (Reference to the Instruction manual)

Input voltage	CN UX connector
400 to 440V/50Hz, 440 to 480V/60Hz	U1 (Factory setting)
380V/50Hz (398V or smaller), 380 to 415V/60Hz (430V or smaller)	U2

*5) Reference to the IEC 61800-3(5.2.3)

$$\text{Unbalance in power supply voltage [\%]} = \frac{\text{(Maximum voltage[V] - Minimum voltage[V])}}{\text{3-phase averaging voltageV}} \times 100 \text{ [\%]}$$

*6) Input power : 85%
*8) If carrier frequency is set at more than 10kHz and an overheat condition (detected by internal thermal sensor) occurs, inverter will automatically reduce carrier frequency to 8kHz , in order to avoid trip.(Available up to 30HP unit)
*9) When setting into 0.1, the starting torque gets 50%
*10) Above 120Hz application, please contact the factory
*11) With a nominal applied motor.(Average torque when the motor decelerates and stops from 60Hz. It may change according to the motor loss.)

11.2 Common Specifications

Item			Explanation
Control	Control Method		Sinusoidal wave PWM control (with V/F control, torque vector control.)
	Output frequency	Maximum frequency	50 to 120 Hz variable setting
		Base frequency	25 to 120 Hz variable setting
		Starting frequency	0.1 to 60 Hz variable setting Holding time: 0.0 to 10.0 s
		Carrier frequency	0.75 to 15k Hz (30 HP or less) 0.75 to 10k Hz (40-100 HP) 0.75 to 6kHz (125HP or more)
		Accuracy (stability)	Analog setting: +/- 0.2% or less of the max. frequency (at 25 +/- 10°C) Digital Setting: +/- 0.01% or less of the max frequency (-10 to +50°C)
		Setting resolution	Analog setting: 1/3000 of max. frequency (e.g. 0.02 Hz / 60 Hz, 0.05 Hz / 150 Hz) Digital setting: 0.01 Hz (99.99 Hz or less), 0.1 Hz (100.0 Hz or more)
	Voltage/frequency Characteristics		Output voltage at base frequency can be adjusted separately, such as 80 to 240V (200V series) or 320 to 480V (400V series)
	Torque Boost		Auto: Optimum control corresponding to the load torque. Manual: 0.1 to 20.0 code setting (energy savings reduced torque, constant torque (strong) etc.)
	Accelerating/decelerating time		0.01 to 3600s Four accelerating and decelerating time settings are possible independent of each other by selecting digital input signals.
			In addition to linear acceleration and deceleration, either S-shaped acceleration/deceleration (weal/strong) or curvilinear acceleration/deceleration
			Starting frequency: 0.0 to 60 Hz, braking time: 0.0 to 30.0s Braking levels: 0 to 80%
	Function equipped		Frequency upper and lower limiter, bias frequency, frequency gain, jump frequency, pick-up operation, restart after momentary power failure, switching operation from line to drive, slip compensation control, automatic energy saving operation, regeneration avoiding control, droop control, torque limiting (2-strp), torque control, PID control, second motor switching, cooling fan ON/OFF control.
Operation	Operation method		Keypad panel: Run by FWD REV keys, stop by STOP key. Terminal input: Forward/Stop command, Reverse/Stop command, Coast-to-Stop command, Alarm reset, acceleration/deceleration selection, multistep frequency
	Frequency setting		Keypad panel: setting by UP and DOWN keys External potentiometer: External freq. Setting POT (VR) (1 to 5k ohm) Analog input: 0 to +10V (0 to 5V), 4 to 20 mA, o to ± 10V (FWD/REV operation) +10 to 0 (reverse operation), 20 to 4 mA (reverse operation) UP/DOWN control: Frequency increases or decreases as long as the digital input signals are turned on Multistep frequency selection: Up to 15 steps are selectable by a combination of digital input signals (four kinds) Link operation: Operation by RS485 (standard) Program operation: Pattern operation by program Jogging operation: Jogging operation by FWD, REV key or digital input signals.
	Operation status signal		Transistor output (4 signals): Running, frequency, arrival, frequency detection, overload early warning, etc. Relay output (2 signals): Alarm output (for any fault), multi-purpose output signals Analog output (1 signal): Output frequency, output current, output voltage, output torque, power consumption, etc. Pulse output (1 signal): Output frequency, output current, output power, output torque, power consumption, etc.

11.2 Common Specifications (continued)

	Item		Explanation
Indication	Digital display LED		Output frequency, setting frequency, output current, output voltage, motor synchronous speed, line speed, load rotation speed, calculated PID value, PID command value, PID feedback value, alarm code.
	Liquid crystal display		Operation information, operational guide, functional code/name/setting data, alarm information, tester function, motor load rate measuring function (Maximum/average current (rms) during measuring period, maintenance information (integrated operation hours, capacitance measurement for main circuit capacitors, heatsink temperature, etc.
	Language		Six languages (Japanese, English, German, French, Spanish, Italian)
	Lamp display		Charging (voltage residual), operation indication
	Protective function		Overcurrent, short-circuit, ground fault, overvoltage, undervoltage, overload, overheating, blown fuse, motor overload, external alarm, input open-phase, output open0phase (when tuning), braking resistor protection, CPU and memory error, keypad panel communications error, PTC thermistor protection, surge protection, stall prevention, etc.
Environment	Installation location		Indoor, altitude less than 3300 feet (1000m), free from corrosive gas, dust and direct sunlight.
	Ambient temperature		-10 to +50°C (+14 to 122°F) (ventilating cover must be removed under conditions exceeding +40°C (+104°F) for models rated at 30 HP or less)
	Vibration		3mm peak from 2-9 Hz, 9.8 m/s^2 from 9-20 Hz, 2m/s^2 from 20-55 Hz, 1 m/s^2 from 55-200 Hz,
	Storage	Ambient temperature	-25 to 65°C (-13 to 149°F)
		Ambient humidity	5 to 95% (no condensation)

11.3 Outline Dimensions-Variable Torque, Constant Torque

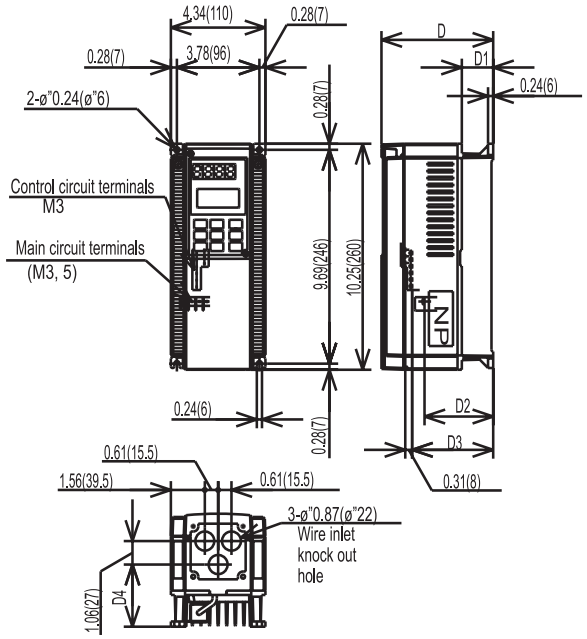

Type	D	D1	D2	D3	D4
1/4, 1/2 Hp	5.12 (130)	1.44 (26.5)	3.15 (80)	3.7 (94)	2.81 (71.5)
1 Hp	5.71 (145)	2.03 (51.5)	3.74 (95)	4.29 (109)	3.41 (86.5)

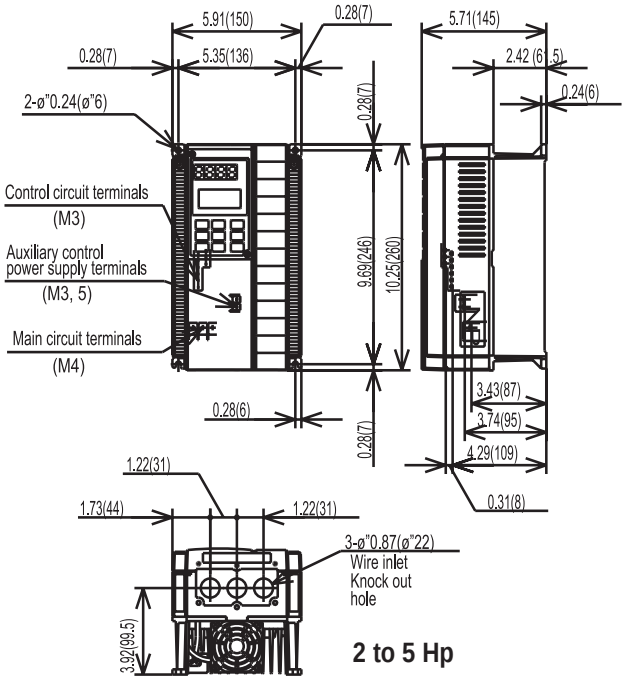

2 to 5 Hp

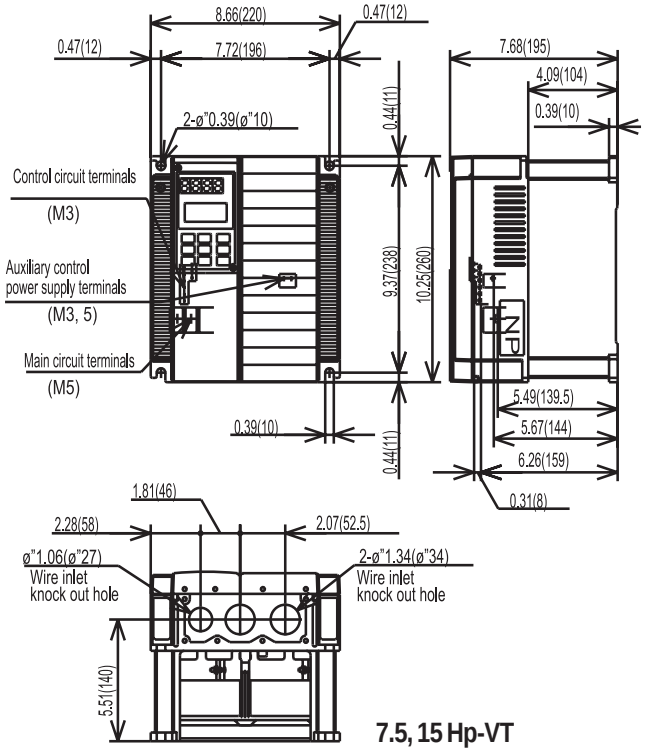

7.5, 15 Hp-VT

7.5, 10 Hp-CT

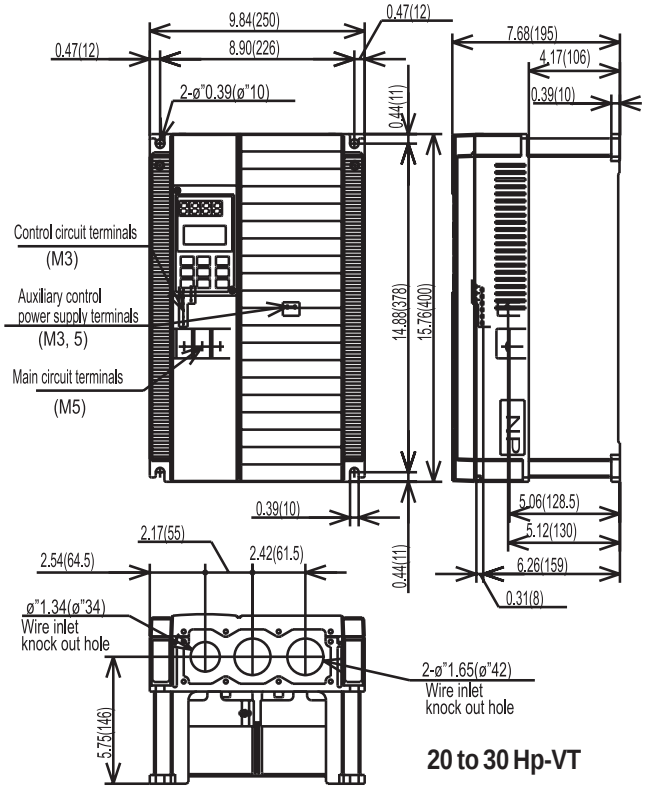

20 to 30 Hp-VT

15 to 30 Hp-CT

11.3.1 Outline Dimensions NEMA 1-Variable/Torque, Constant Torque

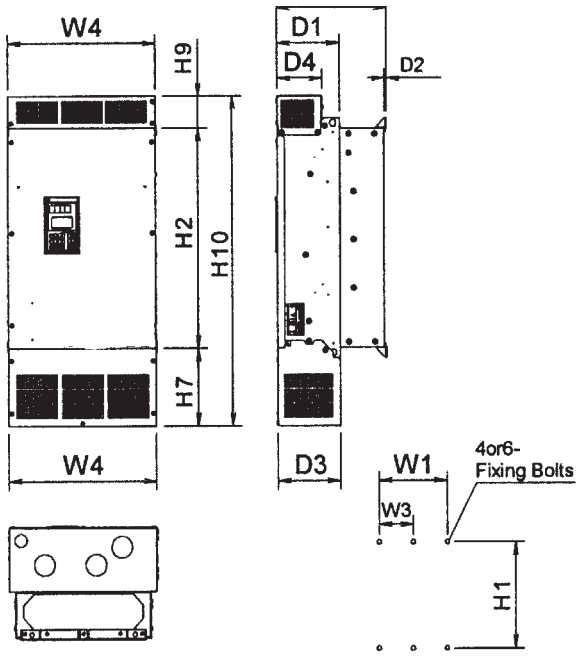

230V Series NEMA 1-Variable/Torque, Constant Torque

Hp	DIMENSIONS inches (mm)														Mtg.	Wt.
	W1	W3	W4	H1	H2	H3	H6	H7	H9	H10	D	D2	D3	D4	Bolts	Lb (kg)
40/30 50/40	9.4 (240)	–	13.5 (342)	20.9 (530)	19.7 (500)	20.2 (512)	0.4 (9)	7.1 (180)	3 (75)	29.7 (755)	10 (255)	0.2 (4)	5.7 (145)	4.1 (105)	M8	70 (32)
60/50	10.8 (275)		14.9 (377)	23.4 (595)	22.2 (565)	22.7 (577)		7.9 (200)		33.1 (840)	10.6 (270)					86 (39)
75/65				28.3 (720)	27.2 (690)	27.6 (702)				38 (965)						106 (48)
100/75																110 (50)
125/100	16.9 (430)		21 (533)		27 (685)	27.4 (695)	0.5 (13)	11.1 (283)	3.3 (83)	41.3 (1050)	11.2 (285)			3.6 (91)	M12	172 (78)
150/125	22.8 (580)	11.4 (290)	26.9 (683)	33.5 (850)	32.1 (815)	32.5 (825)		15.1 (383)		50.4 (1280)	14.2 (360)		8.7 (220)	6.5 (166)		282 (128)

460V Series NEMA 1-Variable/Torque, Constant Torque

Hp	DIMENSIONS inches (mm)														Mtg.	Wt.
	W1	W3	W4	H1	H2	H3	H6	H7	H9	H10	D	D2	D3	D4	Bolts	Lb (kg)
40/30 50/40	9.4 (240)	–	13.5 (342)	20.9 (530)	19.7 (500)	20.2 (512)	0.4 (9)	7.1 (180)	3 (75)	29.7 (755)	10 (255)	0.2 (4)	5.7 (157)	4.1 (105)	M8	70 (32)
60/50	10.8 (275)		14.9 (377)								10.6 (270)					82 (37)
75/65				25.8 (655)	24.6 (625)	25.1 (637)				34.6 (880)						95 (43)
100/75																97 (44)
125/100				28.3 (720)	27.2 (690)	27.6 (702)		7.9 (200)		38 (965)						115 (52)
150/125 200/150	16.9 (430)		21 (533)	28 (710)	26.6 (675)	27 (685)	0.5 (13)	8.2 (208)	3.3 (83)		12.4 (315)		6.9 (175)	4.7 (121)	M12	174 (79)
250/200 300/250				38 (970)	37 (935)	37 (945)		13 (333)		53.1 (1350)	14.2 (360)		8.7 (220)	7 (166)		245 (111)
350/300 400/350 450/350	22.8 (580)	11.4 (290)	26.9 (683)					15.1 (383)		55.1 (1400)						337 (153)

Surface Mount

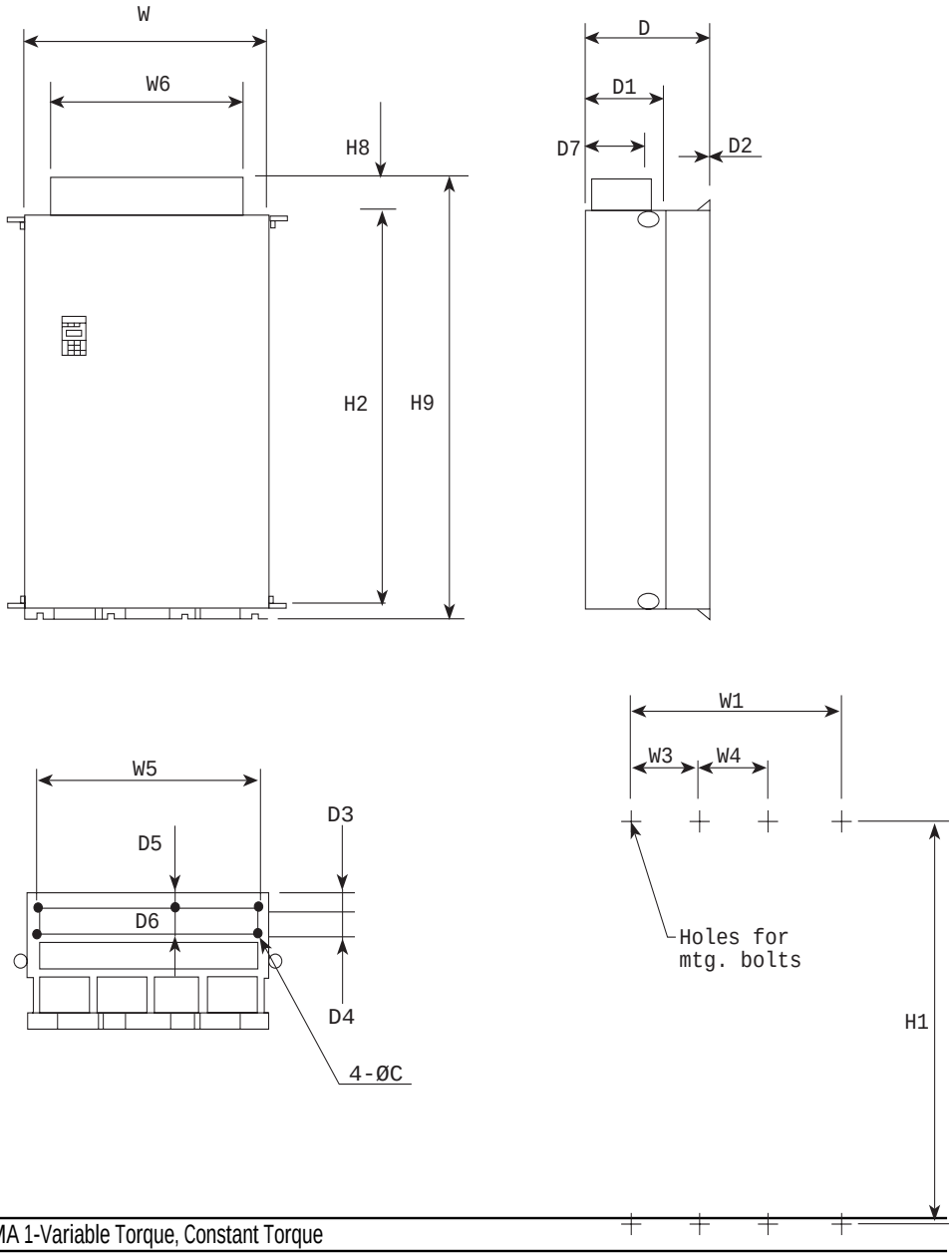

460V Series NEMA 1-Variable Torque, Constant Torque

Hp	DIMENSIONS inches (mm)												
	W	W1	W3	W4	W5	W6	H1	H2	H4	H8	H9	D	D1
500/400	26.8	22.8	11.4	–	24.0	21.9	53.9	52.4	52.6	3.3	57.1	17.7	11.2
600/450	(680)	(580)	(290)		(610)	(555)	(1370)	(1330)	(1335)	(084)	(1450)	(450)	(285)
700/500	34.6	30.7	10.2	10.2	31.9	29.7							
800/600	(880)	(780)	(260)	(260)	(810)	(755)							

Hp	DIMENSIONS inches (mm)							
							Mtg. Bolts	Wt. Lb (kg)
	D2	D3	D4	D5	D6	D7		
500/400	0.3	2.0	3.9	1.4	4.5	8.7	M12	562
600/450	(6)	(50)	(100)	(35)	(115)	(220)		(255)
700/500								804
800/600								(365)

11.3.2 Outline Dimensions Open Type-Variable Torque/ Constant Torque

Surface Mount

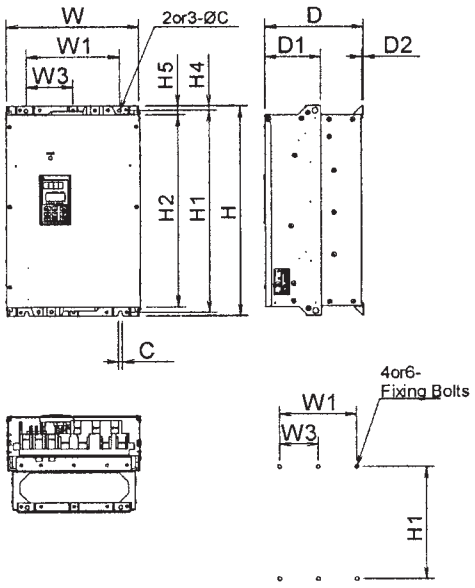

Through Panel Mount

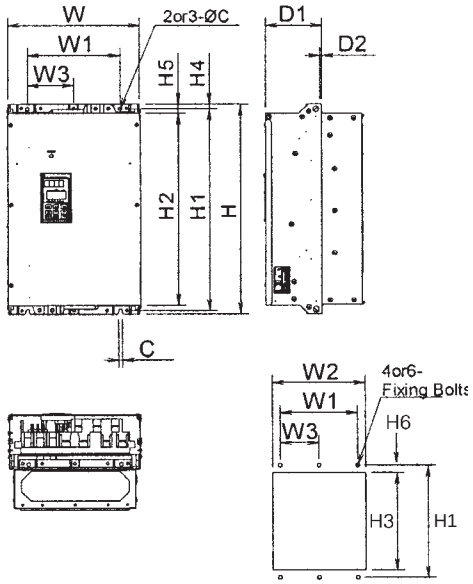

230V Series-Variable Torque, Constant Torque

Hp	DIMENSION Inch (mm)															Mtg.	Weight
230V	W	W1	W2	W3	H	H1	H2	H3	H4	H5	H6	D	D1	D2	C	Bolts	Lb (kg)
40/30	13.4	9.4	12.8		21.7	20.9	19.7	20.2	0.5	1	0.4	10	5.7	0.2	0.4	M8	64
50/40	(340)	(240)	(326)		(550)	(530)	(500)	(512)	(12)	(25)	(9)	(255)	(145)	(4)	(10)		(29)
	14.8	10.8	14.2		24.2	23.4	22.2	22.7				10.6					79
60/50	(375)	(275)	(361)		(615)	(595)	(565)	(577)				(270)					(36)
					29.1	28.3	27.2	27.6									97
75/65					(740)	(720)	(690)	(702)									(44)
																	101
100/75																	(46)
	20.9	16.9	20.1		29.5		27	27.4	0.6	1.3	0.5	11.2			0.6	M12	154
125/100	(530)	(430)	(510)		(750)		(685)	(695)	(16)	(33)	(13)	(285)			(15)		(70)
	26.8	22.8	26		34.6	33.5	32.1	32.5				14.2	8.7				253
150/125	(680)	(580)	(660)		(880)	(850)	(815)	(825)				(360)	(220)				(115)

460V Series-Variable Torque, Constant Torque

Hp	DIMENSION Inch (mm)															Mtg.	Weight
460V	W	W1	W2	W3	H	H1	H2	H3	H4	H5	H6	D	D1	D2	C	Bolts	Lb (kg)
40/30	13.4	9.4	12.8		21.7	20.9	19.7	20.2	0.5	1	0.4	10	5.7	0.2	0.4	M8	64
50/40	(340)	(240)	(326)		(550)	(530)	(500)	(512)	(12)	(25)	(9)	(255)	(145)	(4)	(10)		(29)
	14.8	10.8	14.2									10.6					75
60/50	(375)	(275)	(361)									(270)					(34)
					26.6	25.8	24.6	25.1									86
75/65					(675)	(655)	(625)	(637)									(39)
																	88
100/75																	(40)
					29.1	28.3	27.2	27.6									106
125/100					(740)	(720)	(690)	(702)									(48)
150/125	20.9	16.9	20.1			28	26.6	27	0.6	1.3	0.5	12.4	6.9		0.6	M12	154
200/150	(530)	(430)	(510)			(710)	(675)	(682)	(16)	(33)	(13)	(315)	(175)		(15)		(70)
250/200					39.4	38.2	36.8	37.2				14.2	8.7				220
300/250					(1000)	(970)	(935)	(945)				(360)	(220)				(100)
350/300	26.8	22.8	26	11.4													308
400/350	(680)	(580)	(660)	(290)													(140)
450/350																	

Surface Mount

Through Panel Mount

Alternative Through Panel Mount (bottom bracket support by customer supply.

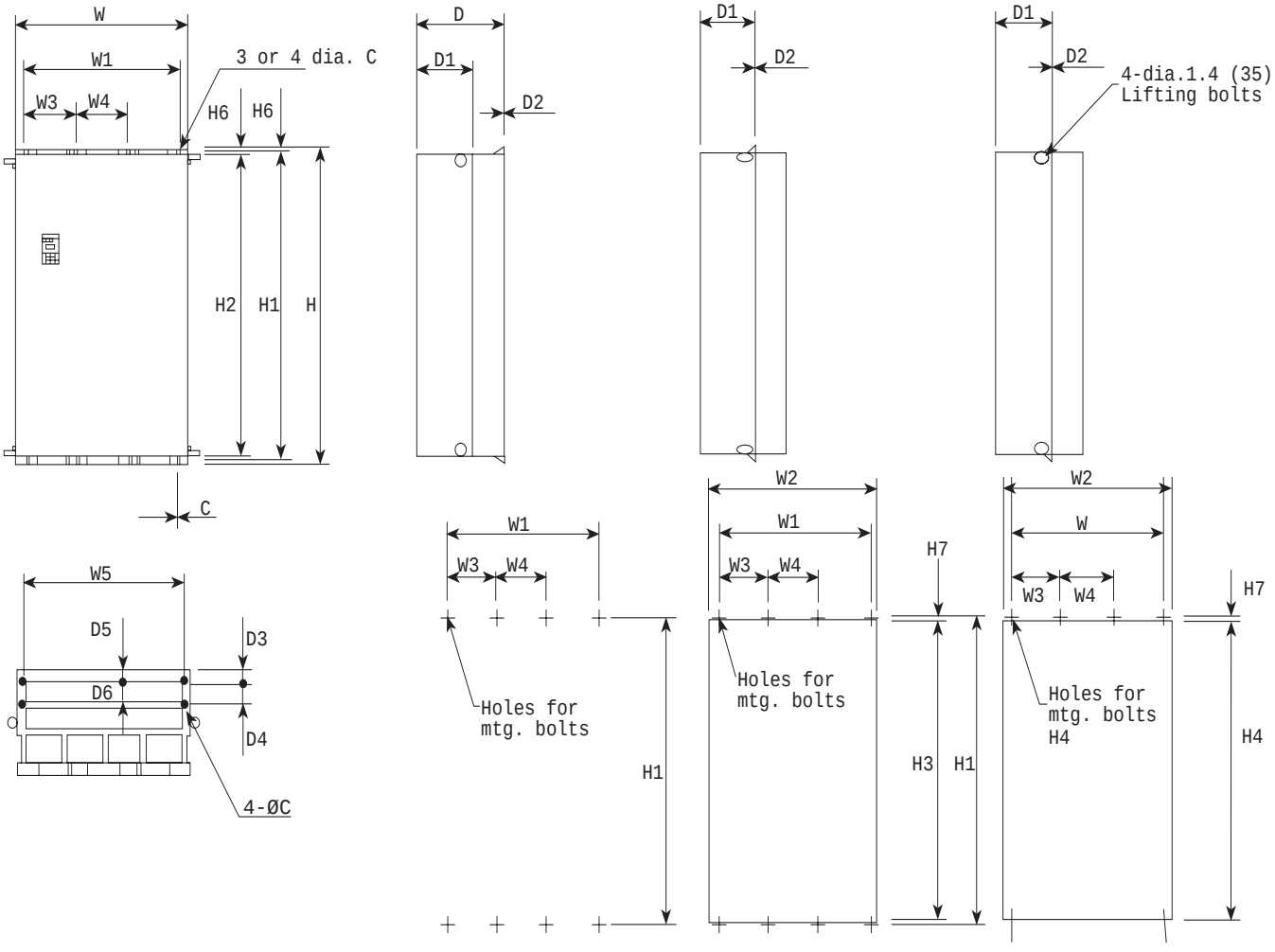

460V Series Open Type-Variable Torque, Constant Torque

Hp	DIMENSIONS inches (mm)															
	W	W1	W2	W3	W4	W5	H	H1	H2	H3	H4	H5	H6	H7	D	D1
500/400	26.8	22.8	26.0	11.4	–	24.0	55.1	53.9	52.4	52.8	52.6	0.6	1.4	0.6	17.7	11.2
600/450	(680)	(580)	(660)	(290)		(610)	(1400)	(1370)	(1330)	(1340)	(1335)	(016)	(035)	(015)	(450)	(285)
700/500	34.6	30.7	33.8	10.2	10.2	31.9										
800/600	(880)	(780)	(860)	(260)	(260)	(810)										

Hp	DIMENSIONS inches (mm)						Mtg. Bolts	Wt. Lb (kg)
	D2	D3	D4	D5	D6	C		
500/400	0.3	2	3.9	1.4	4.5	0.6	M12	551
600/450	(6)	(50)	(100)	(35)	(115)	(015)		(250)
700/500								793
800/600								(360)

11.3.3 Outline Dimensions Open Type with NEMA 12 Heatsink

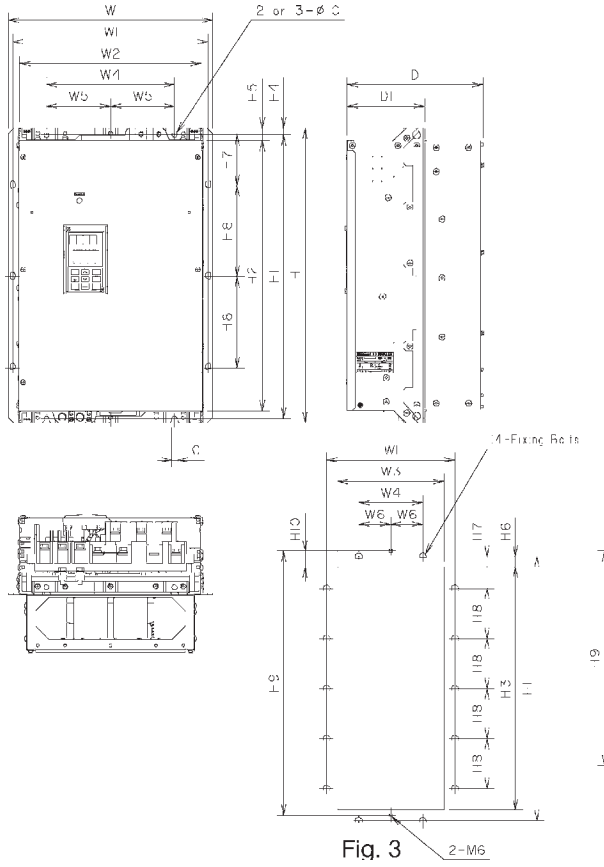

Fig. 3

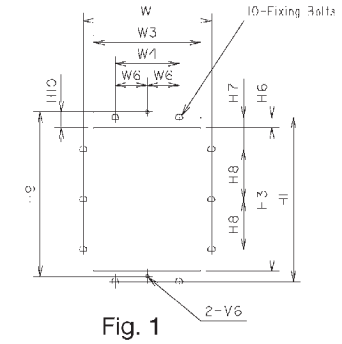

Fig. 1

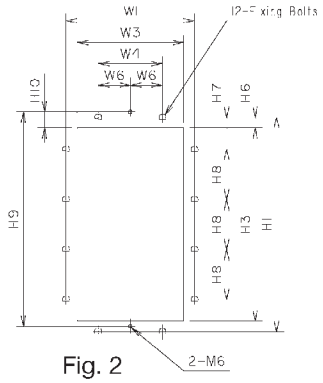

Fig. 2

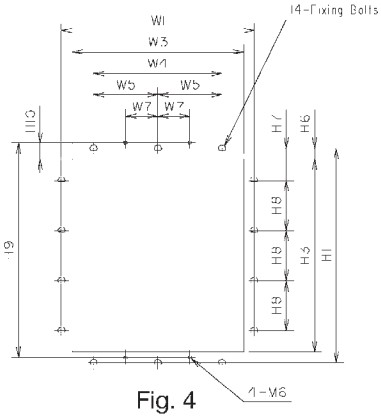

Fig. 4

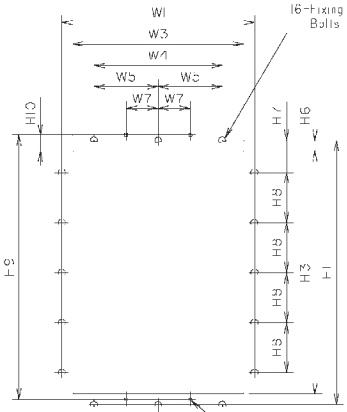

Fig. 5

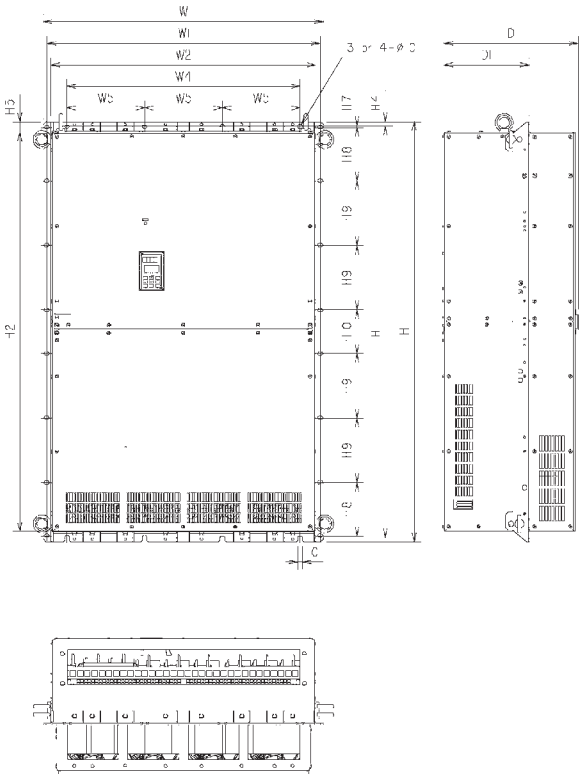

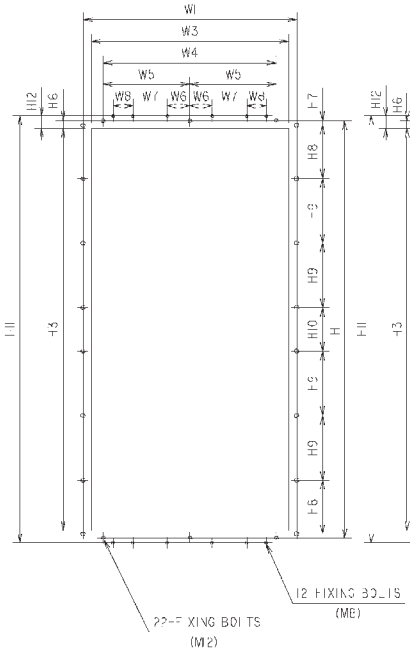

Fig. 6

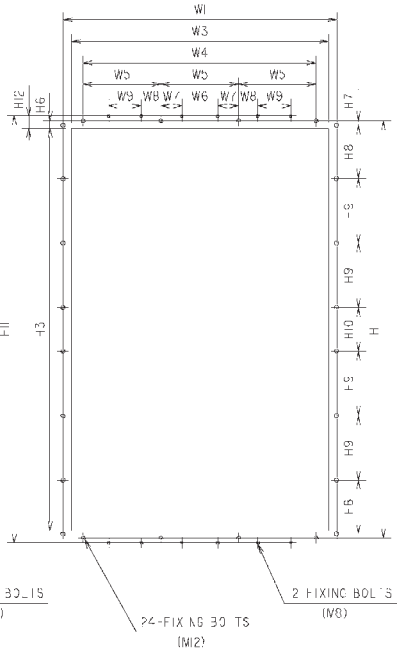

Fig. 7

GP10 230 VAC Series-Variable Torque, Constant Torque

HP	DIMENSIONS Inch(mm)																									Fixing	Wt.	Fig
	W	W1	W2	W3	W4	W5	W6	W7	W8	W9	H	H1	H2	H3	H4	H5	H6	H7	H8	H9	H10	H11	H12	C	D	D1	Bolts	Lb(kg)	
40/30	15.04	14.41	13.39	12.83	9.45		4.72				21.65	20.87	19.69	20.16				3.74		20.87					8.86			66	1
50/40	(382)	(366)	(340)	(326)	(240)		(120)				(550)	(530)	(500)	(512)				(95)		(530)					(225)			(30)	
60/50											24.21	23.43	22.24	22.72	0.47	0.98	0.35	1.67	6.69	23.43	0.43			0.4		5.71	M6	81	
	16.42	15.79	14.76	14.21	10.83		5.41				(615)	(595)	(565)	(577)	(12)	(25)	(9)	(42.5)	(170)	(595)	(11)			(10)	10.63	(145)	and	(37)	
75/60	(417)	(401)	(375)	(361)	(275)	-	(137.5)	-	-	-	29.13		27.17	27.64				4.13				-	-		(270)		M8	99	
											(740)	28.35	(690)	(702)				(105)		28.35								(45)	2
100/95												(720)								(720)								104	
																												(47)	
125/100	23.23	22.28	20.87	20.08	16.93		8.46				29.53		26.97	27.36				1.75	8.27						11.22	5.71	M6	161	
	(590)	(566)	(530)	(510)	(430)		(215)				(750)		(685)	(695)	0.61	1.28	0.49	(44.5)	(210)		0.51			0.6	(285)	(145)	and	(73)	
150/125	29.13	28.19	26.77	25.98	22.83	11.42	-	2.95			34.65	33.46	32.09	32.48	(15.5)	(32.5)	(12.5)	4.02	8.46	33.46	(13)			(15)	14.17	8.66	M12	260	4
	(740)	(716)	(680)	(660)	(580)	(290)		(75)			(880)	(850)	(815)	(825)				(102)	(215)	(850)					(360)	(220)		(118)	

GP10 460 VAC Series-Variable Torque, Constant Torque

HP	DIMENSIONS Inch(mm)																									Fixing	Wt	Fig
	W	W1	W2	W3	W4	W5	W6	W7	W8	W9	H	H1	H2	H3	H4	H5	H6	H7	H8	H9	H10	H11	H12	C	D	D1	Bolts	Lb(kg)	
40/30																									8.86			66	
50/40	15.04	14.41	13.39	12.83	9.45		4.72				21.65	20.87	19.69	20.16				3.74		20.87					(225)			(30)	1
60/50	(382)	(366)	(340)	(326)	(240)		(120)				(550)	(530)	(500)	(512)				(95)		(530)							M6	77	
															0.47	0.98	0.35		6.69		0.43			0.4		5.71	and	(35)	
75/60	16.42	15.79	14.76	14.21	10.83		5.41				26.57	25.79	24.61	25.08	(12)	(25)	(9)	2.85	(170)	25.79	(11)			(10)	10.63	(145)	M8	88	
	(417)	(401)	(375)	(361)	(275)		(137.5)				(675)	(655)	(625)	(637)				(72.5)		(655)					(270)			(40)	
100/75						-		-	-	-																		90	2
																												(41)	
125/100											29.13	28.35	27.17	27.64				4.13		28.35		-	-					108	
											(740)	(720)	(690)	(702)				(105)		(720)								(49)	
150/125											29.13	27.95	26.57	26.97				1.56	8.27	27.95					12.4	6.89		161	
200/150											(740)	(710)	(675)	(685)				(39.5)	(210)	(710)					(315)	(175)		(73)	
	23.23	22.28	20.87	20.08	16.93		8.46								0.61	1.28	0.49				0.51			0.6			M6		
250/200	(590)	(566)	(530)	(510)	(430)		(215)								(15.5)	(32.5)	(12.5)				(13)			(15)			and	229	3
300/250											39.37	38.19	36.81	37.20				2.15	8.46	38.19					14.17	8.66	M12	(104)	
350/300	29.13	28.19	26.77	25.98	22.83	11.42		2.95			(1000)	(970)	(935)	(945)				(54.5)	(215)	(970)					(360)	(220)		317	
400/350	(740)	(716)	(680)	(660)	(580)	(290)	-	(75)																				(144)	5
450/350																													
500/400	29.13	28.19	26.77	25.98	22.83	11.42	2.95	4.55	2.60																		M8	551	6
600/450	(740)	(716)	(680)	(660)	(580)	(290)	(75)	(115.5	(66)		55.12	53.94	52.36	52.76	0.61	1.38	0.57	0.18	6.99	8.46	5.71	54.37	0.81	0.59	17.72	11.22	and	(250)	
700/500	37.01	36.06	34.65	33.86	30.71	10.24	4.72	2.76	2.56	4.33	(1400)	(1370)	(1330)	(1340)	(15.5)	(35)	(14.5)	(4.5)	(177.5)	(215)	(145)	(1381)	(20.5)	(15)	(450)	(285)	M12	793	7
800/600	(940)	(916)	(880)	(860)	(780)	(260)	(120)	(70)	(65)	(110)																		(360)	

Keypad Mounting Hole (Panel Cutting)

Dimensions in inches (mm)

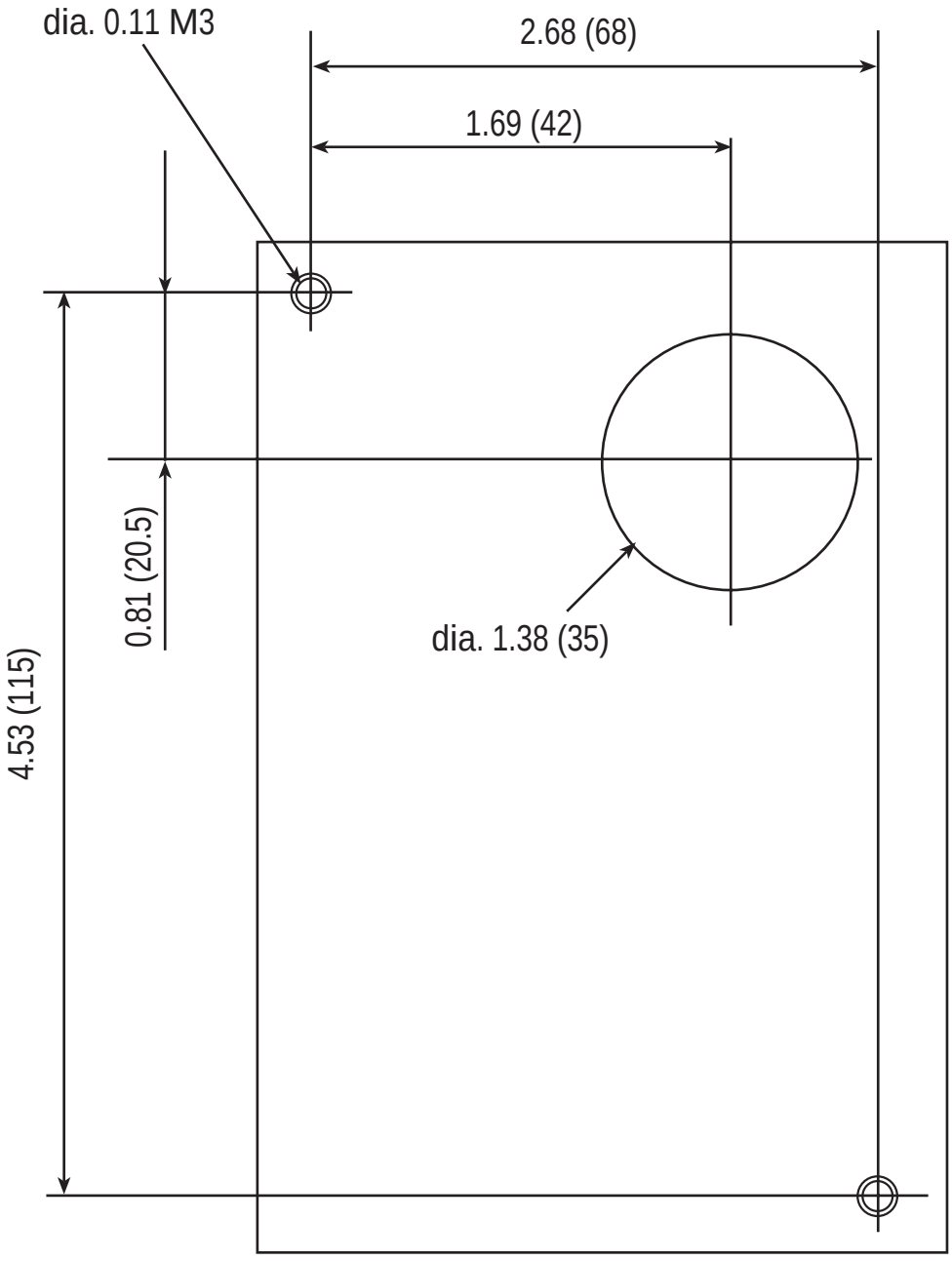

12. RS485 Modbus RTU Serial Communications

The serial interface supports operation, configuration and monitoring of drive functions through an EIA/RS485 connection. The serial interface is based on Modbus RTU protocol. This protocol allows the drive to function as an RTU slave on an industrial network.

12.1 Transmission Specification

Item	Specification
Physical level	EIA/RS485
Transmission distance	500 m max.
Number of nodes	32 total
Transmission speed	19200, 9600, 4800, 2400 [bits/s]
Transmission mode	Half duplex
Transmission protocol	Modbus RTU
Character code	Binary
Character length	8 bits
Error check	CRC

12.2 Connection

Connection method

Use shielded wire and connect to the control terminals (DX-, DX+ and SD). A termination resistor should be added between the data lines on the each end of the network. The value of the termination resistor depends on the characteristic impedance of the cable. A common value for termination resistors is 120 ohms.

Control terminals

Terminal marking	Terminal name	Function description
DX+	RS485 communication data (+)	Input/output terminals for RS485 communication.
DX-	RS485 communication data (–)	
SD	Cable shield	Electrically floating

12.3 Serial Interface Configuration

Drive function codes H30 to H39 are used to configure the serial interface parameters, such as device address, baud rate and error response.

12.4 Modbus RTU Functions

The following RTU functions are supported. The maximum number of consecutive parameters for function 03 and 16 messages is 16.

Code	Description
03	Read Holding Registers (16 registers maximum)
06	Preset Single Register
16	Preset Multiple Registers (16 registers maximum)

12.5 Drive Function Code Access

All of the drive function codes are accessible through the RS485 serial interface. Drive function codes are mapped to RTU holding registers. A drive function code RTU address is 2 bytes in length. The high byte corresponds to a code that represents the drive parameter sort (F–M). The low byte corresponds to the drive parameter number within the sort (0 - 99).

Code	Sort	Name	Code	Sort	Name
0	**F**	Basic function	**5**	**A**	Motor 2 function
1	**E**	Terminal function	**6**	**o**	Option function
2	**C**	Control function	**7**	**S**	Command/function data
3	**P**	Motor 1 function	**8**	**M**	Monitor data
4	**H**	High level function			

For example, drive function code M11, output current, is addressed as RTU parameter number 080B hexadecimal or 2059 decimal.

high byte	low byte
drive parameter sort code	drive parameter number

12.6 Command and Monitor Data Registers

The command and monitor function codes are used to control the operation of the drive and monitor the status variables through the serial interface. The command and monitor function codes are not accessible from the drive keypad interface. Drive parameter H30 and digital input signal LE must be enabled to operate the drive from the Modbus interface. If LE is not assigned to a digital input (X1-X9), the signal will default to ON.

Frequency Setting Registers

Address	Code	Name	Unit	Variable Range	Min. unit	Read/ Write	Data Format
1793	S01	Frequency command	-	-20000–20000 (max. frequency at ± 20000)	1	R/W	2
1797	S05	Frequency command	Hz	0.00–400.00	0.01	R/W	5

Note:

1) If both S01 and S05 are set, the drive will ignore the setting of S05.

2) A data setting that exceeds the setting range is possible, but the actual action will be limited by the drive configuration.

Operation command data Registers

Address	Code	Name	Unit	Variable Range	Min. unit	Read/ Write	Data Format
1798	S06	Operation command	-	Refer to the data format [14]	-	R/W	14
1799	S07	Universal Do	-	Refer to the data format [15]	-	R/W	15
1804	S12	Universal Ao	-	-20000–20000 (100% output at ± 20000)	1	R/W	2

Note:

1) Since X1–X9 are configurable input commands, it is necessary to set the functions by E01–E09.

2) The alarm reset is executed, when RST signal changes from ON to OFF even if there are no alarms.

3) Universal Do is a function that utilizes the drive's digital outputs via communication.

Function data Registers

Address	Code	Name	Unit	Variable range	Min. unit	Read/ Write	Data Format
1800	S08	Acceleration time F07	s	0.1–3600.0	0.1	R/W	3
1801	S09	Deceleration time F08	s	0.1–3600.0	0.1	R/W	3
1802	S10	Torque limit level 1 (driving) F40	%	-20.00 –200.00, 999	1	R/W	5
1803	S11	Torque limit level 2 (braking) F41	%	0.00, 20.00–200.00, 999	1	R/W	5

Note:

1) The writing of data out of range is treated as out of range error.

2) Use a value of $7FFF_H$ to enter 999 for torque limit functions.

Monitoring parameter registers

Address	Code	Description	Unit	Range	Min. unit	Read / Write	Data Format
2049	M01	Frequency command (final command)	-	- 20000–20000 (max. frequency at ± 20000)	1	R	2
2053	M05	Frequency command (final command)	Hz	0–400.00	0.01	R	5
2054	M06	Actual frequency	-	- 20000–20000 (max. frequency at ± 20000)	1	R	2
2055	M07	Actual torque value	%	- 200.00–200.00	0.01	R	6
2056	M08	Torque current	%	- 200.00–200.00	0.01	R	6
2057	M09	Output frequency	Hz	0.00–400.00	0.01	R	5
2058	M10	Motor output (input electric power)	%	0.00–200.00	0.01	R	5
2059	M11	Output current r. m. s.	%	0.00–200.00 (inverter rating at 100.00)	0.01	R	5
2060	M12	Output voltage r. m. s.	V	0.0–600.0	1	R	3
2061	M13	Operation command (final command)	-	Refer to data format [14]	-	R	14
2062	M14	Operating state	-	Refer to data format [16]	-	R	16
2063	M15	Universal output terminal data	-	Refer to data format [15]	-	R	15
2064	M16	Fault memory 0	-	Refer to data format [10]	-	R	10
2065	M17	Fault memory 1	-				10
2066	M18	Fault memory 2	-				10
2067	M19	Fault memory 3	-				10
2068	M20	Integrated operating time	h	0–65535	1	R	1
2069	M21	DC link voltage	V	0–1000	1	R	1
2071	M23	Type code	-	Refer to data format [17]	-	R	17
2072	M24	Drive capacity code	-	Refer to data format [11]	-	R	11
2073	M25	ROM version	-	0–64999	1	R	1
2074	M26	Transmission error processing code	-	Refer to data format [20]	-	R	20
2075	M27	Frequency command at alarm (final command)	-	- 20000–20000 (max. frequency at ±20000)	1	R	2
2079	M31	Frequency command at alarm (final command)	Hz	0–400.00	0.01	R	5
2080	M32	Actual frequency at alarm	-	- 20000–20000 (max. frequency a t ± 20000)	1	R	2
2081	M33	Actual torque at alarm	%	- 200.00 – 200.00	0.01	R	6
2082	M34	Torque current at alarm	%	- 200.00 – 200.00	0.01	R	6
2083	M35	Output frequency at alarm	Hz	0.00 – 400.	0.01	R	5
2084	M36	Motor output at alarm (input power)	%	0.00–200.00	0.01	R	5
2085	M37	Output current r.m.s. at alarm	%	0.00 – 200.00 (inverter rating at 100.00)	0.01	R	5
2086	M38	Output voltage effective value at alarm	V	0.0 – 600.0	1	R	3
2087	M39	Operation command at alarm	-	Refer to data format [14]	-	R	14
2088	M40	Operating state at alarm	-	Refer to data format [16]	-	R	16
2089	M41	Universal output terminal data at alarm	-	Refer to data format [15]	-	R	15
2090	M42	Integrated operation time at alarm	h	0–65535	1	R	1
2091	M43	DC link voltage at alarm	V	0–1000	1	R	1
2092	M44	Inverter internal air temp. at alarm	°C	0–120	1	R	1
2093	M45	Cooling fin temp. at alarm	°C	0–120	1	R	1
2094	M46	Life of main circuit capacitor.	%	0.0–100.0	0.1	R	3
2095	M47	Life of printed circuit board capacitor.	h	0–65535	1	R	1
2096	M48	Life of cooling fan.	h	0–65535	1	R	1

12.7 Data Format Specification

All data in the data field of communication frame shall be represented by a 16 bit length word.

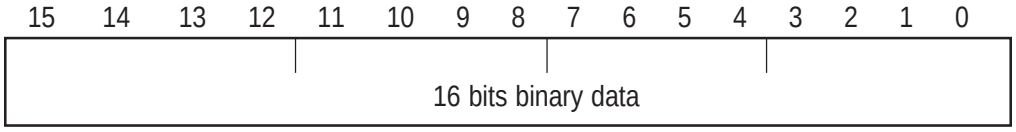

Data format [1] **Unsigned Integer data (Positive): Min. unit 1**

Example If F15 (Frequency limit, upper)= 60Hz

60 = $003C_H$

Data format [2]] **Integer data (Positive, negative): Min. unit 1**

Example data = -20

-20 = $FFEC_H$

Data format [3] **Unsigned Decimal data (Positive): Min. unit 0.1**

Example: If F17 (frequency gain setting signal) = 100.0%

100.0 X 10 = 1000 = $03E8_H$

Data format [4] **Decimal data (Positive, negative): Min. unit 0.1**

Example If: C31 (Analog input offset adjust, terminal12) = - 5.0%

- 5.0 X 10= - 50 = $FFCE_H$

Data format [5] **Unsigned Decimal data (Positive): Min. unit 0.01**

Example: If C05 (multi-step frequency 1) = 50.25Hz

50.25 X 100 = 5025 = $13A1_H$

Data format [6] **Decimal data (Positive, negative): Min. unit 0.01**

Example: If M07 (actual torque value)= - 85.38%

- 85.38 X 100= - 8538=$DEA6_H$

Data format [7] **Unsigned Decimal data (Positive): Min. unit 0.001**

Example: If o05 (follow - up side ASR 1 constant) = 0.105s

0.105 X 1000 = 105 = 0069_H

Data format [8] **Decimal data (Positive, negative): Min. unit 0.001**

Example: Data = -1.234

- 1.234 X 1000 = - 1234 = $FB2E_H$

Data format [9] **Unsigned Integer data (Positive): Min. unit 2**

Example If P01 (Motor 1 number of poles) =2pole

2 = 0002_H

Data format [10] **Alarm Code**

Code	Description		Code	Description	
0	No alarm	—-	22	Overheat, DB resistor	dbH
1	Overcurrent, during acceleration (INV output)	OC1	23	Overload, motor 1	OL1
2	Overcurrent, during deceleration (INV output)	OC2	24	Overload, motor 2	OL2
3	Overcurrent, during steady state operation (INV output)	OC3	25	Overload, drive	OLU
5	Ground fault	EF	27	Overspeed	OS
6	Overvoltage, during acceleration	OU1	28	PG wire break	Pg
7	Over voltage, during deceleration	OU2	31	Memory error	Er1
8	Overvoltage, during steady state operation	OU3	32	Keypad error	Er2
10	DC undervoltage	LU	33	CPU error	Er3
11	Power supply open phase	Lin	34	Option comm error	Er4
14	Blown DC fuse	FUS	35	Option error	Er5
16	Output wiring error	Er7	36	PL error	Er6
17	Overheat, heat sink, inverter	OH1	37	Output wiring error	Er7
18	Overheat, outside thermal	OH2	38	RS485 comm error	Er8
19	Overheat, unit inside temp	OH3			

Data format [11] Capacity code

Code	Capacity (HP)	Code	Capacity (HP)	Code	Capacity (HP)
7	0.07 (spare)	2000	20	17500	175
15	0.15 (spare)	2500	25	20000	200
25	0.25	3000	30	25000	250
50	0.5	4000	40	30000	300
100	1	5000	50	35000	350
200	2	6000	60	40000	400
300	3	7500	75	45000	450
500	5	10000	100	50000	500
750	7.5	12500	125	60600	600
1000	10	15000	150	60700	700
1500	15			60800	800

Data format [12] Index data (ACC/DEC time, display coefficient)

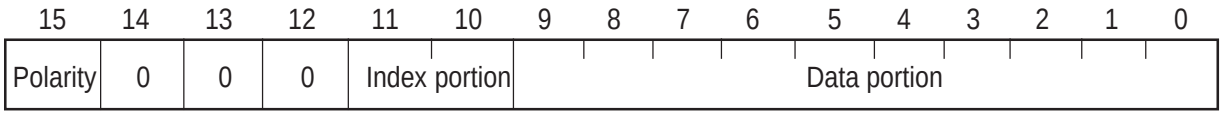

1: Negative (-)

0: Positive (+),

0: 0.01	X	001–999	(0.00–9.99)
1: 0.1	X	00–999	(10.0–99.9)
2: 1	X	100–999	(100–999)
3: 10	X	100–999	(1000–9990)

Example: If F07 (acceleration time 1) = 20.0 s

10.0 < 20< 99.9 index =1

20.0 = 0.1 X 200 $0400_H + 00C8_H = 04C8_H$

Data format [13] **Pattern operation**

15	14	13	12	11	10	9	8	7	6	5	4	3	2	1	0
Direction of rotation	0	Time		Index portion		Data portion									

0: FWD
1: REV

0: 1st ACC/DEC time	0: 0.01 X	001–999	(0.00–9.99)
1: 2nd ACC/DEC time	1: 0.1 X	100–999	(10.0–99.9)
2: 3rd ACC/DEC time	2: 1 X	100–999	(100–999)
3: 4th ACC/DEC time	3: 10 X	100–999	(1000–9990)

Example) If C22 (Stage1) = 10.0s R2 (10s, reverse rotation, acceleration time 2/deceleration time 2)
Since 10.0 = 0.1 X 100 > 9000_H + 0400_H + 0064_H = 9464_H

Data format [14] **Operation command**

15	14	13	12	11	10	9	8	7	6	5	4	3	2	1	0
RST	0	0	0	0	X9	X8	X7	X6	X5	X4	X3	X2	X1	REV	FWD

(All bit are ON by 1)
Example If S06 (operation command) = FWD, X1 and X5 = ON
0000 0000 0100 0101_b = 0045_H

Data format [15] **Universal output terminal**

15	14	13	12	11	10	9	8	7	6	5	4	3	2	1	0
0	0	0	0	0	0	0	0	0	0	0	Y5	Y4	Y3	Y2	Y1

(All bit are ON by 1)
Example) If M15 (Universal output terminal)=Y1 and Y5 = ON
0000 0000 0001 0001_b = 0011_H

Data format [16] **Operating state**

15	14	13	12	11	10	9	8	7	6	5	4	3	2	1	0
BUSY	WR		RL	ALM	DEC	ACC	IL	VL	TL	NUV	BRK	INT	EXT	REV	FWD

(All bit are ON or active by 1)

FWD:	Forward operation	IL:	Current limiting
REV:0:	Reverse operation	ACC:	Under acceleration
EXT:	DC braking active (or pre-excitation)	DEC:	Under deceleration
		ALM:	Drive fault
INT:	No Output	RL:	Transmission valid
BRK:	Braking active	WR:	Function writing privlege
NUV:	DC link voltage is established (undervoltage at 0)		0: Keypad panel 1: RS485
TL:	Torque limiting		2: Fieldbus (option)
VL:	Voltage limiting	BUSY:	Processing data write

Data format [17] **Type code**

15	14	13	12	11	10	9	8	7	6	5	4	3	2	1	0
Type				Generation				Series				Voltage series			

Code	Type	Generation	Series	Voltage series
1	-	VG10	-	-
2	VG10	-	-	-
3	GP10	-	-	230V three phase
4	-	-	-	460V three phase
5	-	-	USA	575V three phase
6	-	-	-	-

Data format [18] **Code setting (1–4 figures)**

15	14	13	12	11	10	9	8	7	6	5	4	3	2	1	0
Data 4				Data 3				Data 2				Data 1			

Data format [19] **Amperage value Decimal data (positive):**
Min. unit 0.01 inverter capacity is not more than 30HP
Min unit 0.01 for not less than 40HP

Example) If F11 (electronics thermal overload relay 1 level)107.0A (40HP)
107.0 X 10=1070=042E$_H$
If F11 (electronics thermal overload relay 1 level)=3.60A (1HP)
Since 3.60 X 100=360=0168$_H$

Data format [20] **Transmission error code**

Code	Description	Code	Description
1	FC (function code) error	71	CRC error (no response)
2	Illegal address	72	Parity error (no response)
3	Illegal address (Data range error)	73	Other errors (no response) -Framing error -Overrun error -Buffer full error
7	NAK -Priority for comm -No privilege for writing error -Forbidden writing error		

Data format [21] **Auto tuning**

15	14	13	12	11	10	9	8	7	6	5	4	3	2	1	0
0	0	0	0	0	0	REV	FWD	Data portion							

0: Without forward rotation command
1: With forward rotation command.
0: Without reverse rotation command.
1: With reverse rotation command.

Example) If P04 (motor 1 auto - tuning)=1: Forward rotation
0000 0001 0000 0001_b=0101_H

12-7 Communication Errors

Exception Response

When the drive receives a message that does not contain communication errors but the message can not be processed, the drive will return an exception response. The exception response contains an error sub-code in the data field that represents the problem.

Exception Response Errors

Sub-Code	Name	Causes
1	Illegal Function	Received RTU Function other than 03, 06 or 16
2	Illegal Data Address	• The starting parameter address is an unused drive parameter.. The starting parameter address plus the offset refers to drive • parameter greater than the last parameter in a Function Code sort. • The number of registers is greater than 16.
3	Illegal Data Value	Data contains an out of range value for a drive parameter
7	Negative Acknowledge	• Requested data cannot be changed while the drive is running. The drive parameter function is owned by the network interface • option card and cannot be changed.

Communication errors

Communication errors occur when the drive receives an invalid message. The drive will not return a response to a communication error. A code that represents the last communication error is stored in drive parameter M26. Typical communication message errors include parity, framing, and CRC errors.

13. Options

13.1 Built-in Options

The drive supports two internally mounted cards. One option card is mounted under the main cover (Location A) and the other option card is mounted in a special adapter under the keypad (Location B). Only one card can be mounted in these locations. There are two different types of option cards, Type 1 and Type 2. You cannot use two Type 1 or Two Type 2 cards but you can mix any combination of Type 1 and Type 2 provided you only have one option per mounting location. Each option card must be mounted in the designated location. The chart below lists the option card, their types, and their mounting locations.

Name	Type	Loc	2nd Option Type/Loc	Function
SOPCG11SRY (Relay output card)	1	A	2/B	• Relay output card The transistor output from the drive control output terminals Y1 and Y4 are converted to the relay output (1SPDT).
SOPCG11SDIO (Digital interface card)	2	A	None	• Frequency setting by binary code (max. 16 bits) • Monitoring (8 bits) of frequency, output current, and output voltage
SOPCG11SA0 (Analog interface card)	2	A	None	• Auxiliary input for analog frequency setting (0 to +/-10 V) • Monitoring of drive output frequency, current, and torque in analog voltage, analog output 0-10 VDC abd 4-20mA
SOPCG11SC01 (Interface card)	1	A	2/B	• 115 VAC Control input, an isolation amplifier, relay output, PG encoder, analog output 4-20mA
SOPCG11SLON (Communication card)	2	B	1/A	• Serial communication card for LonWorks
SOPCG11SPDP (Communication card)	2	B	1/A	• Serial communication card for Profibus-DP
SOPCG11SDEV (Communication card)	2	B	1/A	• Serial communication card for Device Net
SOPCG11SCOP (Communication card)	2	B	1/A	• Serial communication card for CAN
SOPCG11SMBP (Communication card)	2	B	1/A	• Serial commnication card for Modbus plus
SOPCG11SIBS (Communcation card)	2	B	1/A	• Serial communcation card for Interbus-S
SHE300GEN150 (Communication card)	2	B	1/A	• Serial communication card for Genius

Name	Digital I/O interface card	
Type	SOPCG11SDIO	
Function	4 digital inputs: Binary code input of max. 16 bits or BCD input (Sink/Source changeable) 3 digital outputs: Binary code output of max. 8 bits.	
Specifications	Input	Digital signal input (4 points) by short-circuiting terminals L1, L16 and M1 <Sink> ON operation current: 4.5mA max. OFF operation voltage: 27V max. <Source> ON operation current: 4.5mA max. OFF operation voltage: 27V max. Related function code: o19, o20
	Output	Digital signal output (3 points) by short-circuiting terminals between O1 to O6, and M2 <Sink> ON operation current: 50mA max. OFF operation voltage: 27V max. <Source> ON operation current: -50mA max. OFF operation voltage: 27V max. Related function code: o21
	Power Source	+24 VDC (3.2mA x 4 + 12.8mA)
Connection diagram	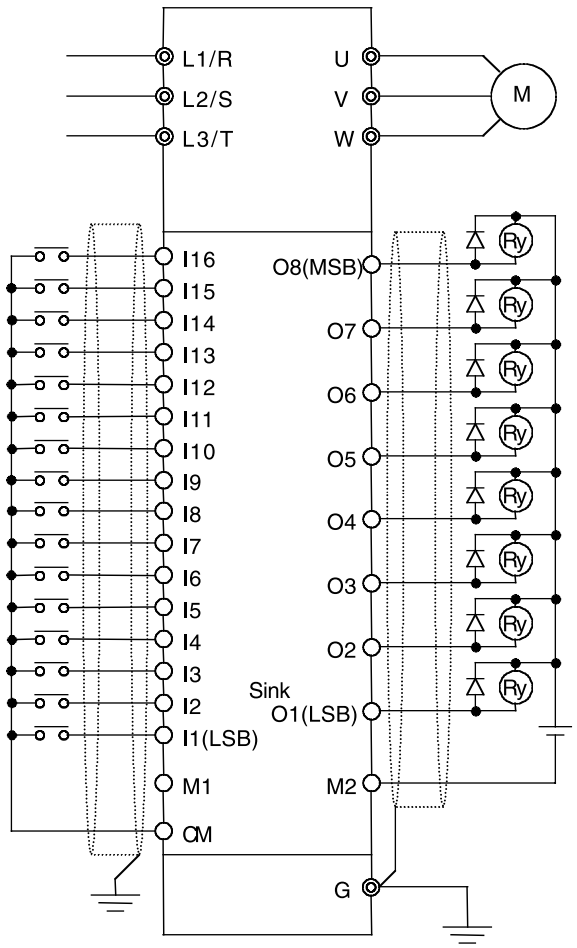	
Remarks		

Name	Analog I/O Interface Card	
Type	SOPCG11SAIO	
Function	3 analog inputs (2 voltage inputs and 1 current input): Torque limiting value (driving, braking), frquency setting, ratio setti can be input respectively. 2 analog outputs (1 voltage output and 1 current output): 11 types of data can be output.	
Specifications	Input	Analog signal input (3 points) 32 and 31, 22 and 21, C2 and 21. Terminal 32: Voltage input (both sides): 0 to ±10 VDC / 0 to ±100%, input impedance: 22k ohm. Terminal 22: Voltage input (both sides): 0 to +10 VDC / 0 to +100%, input impedance: 22k ohm. Terminal C2: Current input: 4 to + 20mADC / 0 to +100%, input impedance: 250k ohm. For voltage input, power supply terminal for variable resistor (P10) should be connected. Related function code o22
	Output	Analog signal input (2 points) between AO+ and AO-, CS+ and CS- Terminal AO+: Voltage output: 0 to ±10 VDC, for max. 2 voltmeters, input impedance: 10k ohm Terminal AO-: Voltage output common. Terminal CS+: Current output: 4 to 20mAdc, max. 500 ohm Terminal CS-: Current output common (Terminal CS- is isloated from terminal 21, 31 and AO-) Related function code o23
Connection diagram	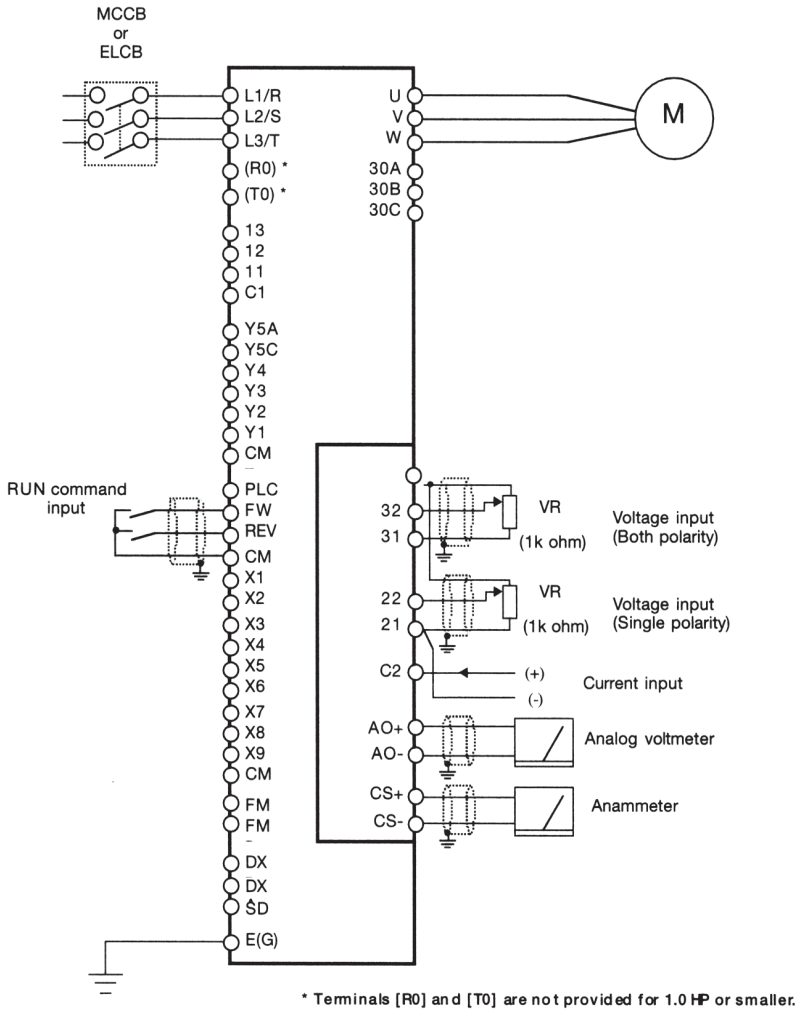	
Remarks		

Name		Relay Output Card
Type	Card type Unit type	SOPCG11SRY
Function	¥ Includes 4 relay output circuits ¥ Converts transistor output signals from drive control output terminals Y1 to Y4 to relay (1SPDT) output signals.	
Specifications	Input	None
	Output	Four-channel contact (12 terminals from Y1A to Y4C) 250 VAC, 0.3A, ocs dia. = 0.3
	Power source	The power source to drive the relay card is supplied from the drive.
Connection diagram	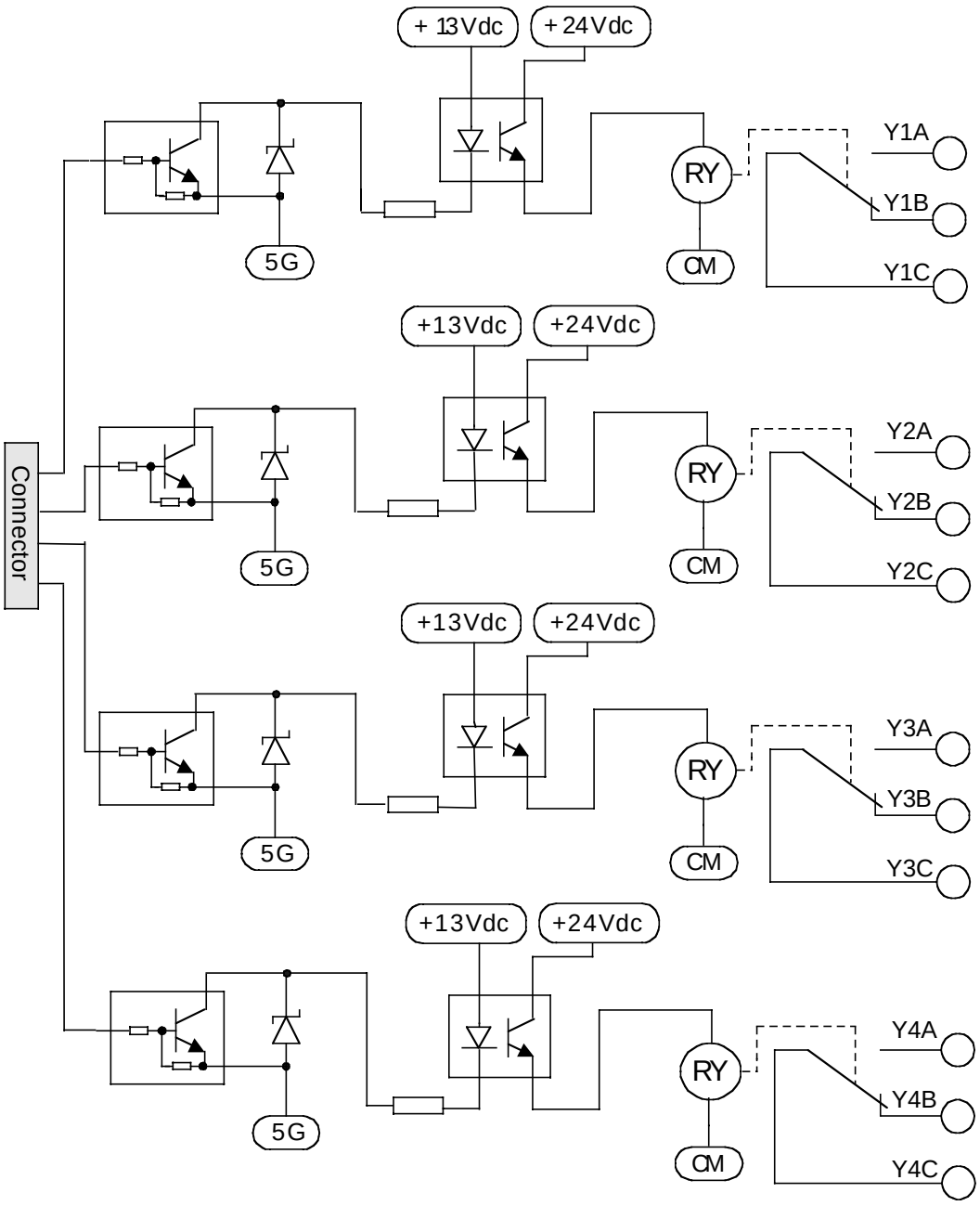	
Remarks		

14. Electromagnetic Compatibility (EMC)

14.1 General

In accordance with the provisions described in the European Commission Guidelines Document on Council Directive 89/336/EEC, these drives are classified as “Complex Components”.

Classification as a “Complex Components” allows a product to be treated as an “apparatus”, and thus permits compliance with the essential requirements of the EMC Directive to be demonstrated to both an integrator of GP10 drives and to his customer or the installer and the user.

GP10 drive is supplied ‘CE-marked’, signifying compliance with EC Directive 89/336/EEC when fitted with specified filter units installed and earthed in accordance with this sheet.

This Specification requires the following performance criteria to be met.

EMC product standard EN61800-/13/1997

Immunity: Second environment (Industrial environment)
Emision: First environment (Domestic environment)

Finally, it is the customer’s responsibility to check whether the equipment conforms to EMC directive.

14.2 Recommended Installation Instructions

It is necessary that to conform to the EMC Directive, these instructions must be followed.

Follow the usual safety procedures when working with electrical equipment. All electrical connections to the filter, Drive and motor must be made by a qualified electrical technician.

1) Use the correct filter according to Table on page 6-39.
2) Install the Drive and filter in the electrically shielded metal wiring cabinet.
3) The back panel of the wiring cabinet should be prepared for the mounting dimensions of the filter. Care should be taken to remove any paint etc. from the mounting holes and face area of the panel. This will ensure the best possible grounding of the filter.
4) Use the shield cable for the control , motor and other main wiring which are connected to the Drive. These shields should be securely grounded.
5) It is important that all wire lengths are kept as short as possible and that incoming mains and outgoing motor cables are kept well separated.

“ To minimize the conducted radio disturbance in the power distribution systems, the length of the motor-cable should be as short as possible. “

6) In the case where a ferrite ring is provided with the filter, fit the ferrite ring so the conductors pass through the center of the ferrite. Wire the cable according to Fig.6 or Fig.7 , paying attention to the applied Drive type.

Applied Drive GP10

[Hp] Max. rated voltage 3 Phase 230 VAC

G11	Filter Type (Fuji model #)	Rated Current	Tested Motor Cable Length		RFI Filter Data					Note
			EN55011 Class B	EN55011 Class A	Dimensions L x W x H (mm)	Mount. Dim. Y x X (mm)	Ferrite Ring (Qty)	Total Wt. (lb)	Watt loss [W]	
0.25 0.5 1	EFL075SP2 (EFL-0.75SP-2)	6A	—	164 ft (50m)	9.57 x3.35x3.66 (243x85x93)	8.98x2.32 (228x59)	OF1 [1]	3.3	0.4 1.4 5.1	Fig. 1 Separate Type
2 3 5	EFL370SP2 (EFL-3.7SP-2)	25A			9.17x4.13x5.35 (233x105x136)	8.46x 3.15 (215x80)	OF2 [1]	5.5	3.9 8.2 21	
7.5 10	EFL750SP2 (EFL-7.5SP-2)	50A			10.75x4.72x6.22 (273x120x158)	10x3.74 (254x95)	OF2 [1]	11.0	24 40	
15 20	EFL150SP2 (EFL-15SP-2)	100A			20.2x8.07x7.6 (513x205x193)	19.17x6.30 (487x160)	OF3 [1]	44.1	42 68	
25 30	EFL220SP2 (EFL-22SP-2)	150A							74 99	
40	RF3180F11 (RF3180-F11)	180A	—	328 Ft (100m)	19.49x7.87x6.3 (495x200x160)	18.4x6.53 (468x166)	—	48.7	60	Fig. 3 Separate Type
50 60	RF3280F11 (RF3280-F11)	280A			23.11x9.84x8.07 (587x250x205)	22.05x3.35 (560x85)	—	48.7	120	Fig. 4 Separate Type
75 100 125 150	RF3400F11 (RF3400-F11)	400A					—	110	220	
[HP] Max. rated voltage 3 Phase 480 VAC										
0.5 1	EFL075G114 (EFL-0.75G11-4)	5A	33 ft (10m)	164 ft (50m)	12.6x4.56x1.65 (320x116x42)	11.54x3.54 (293x90)	—	2.0	0.8 3.1	Fig. 2 Separate/ Integral Type
2 3 5	EFL400G114 (EFL-4.0G11-4)	12A			12.6x6.1x1.77 (320x155x45)	11.54x4.13 (293x105)	—	2.6	3.1 6.9 18	
7.5 10	EFL750G114 (EFL-7.5G11-4)	35A			13.43x8.86x1.87 (341x225x47.5)	12.24x6.57 (311x167)	—	4.0	10 17 24	
15 20	EFL150G114 (EFL-15G11-4)	50A			19.69x9.84x2.76 (500x250x70)	17.68x7.28 (449x185)	—	7.9	29 49	
25 30	EFL220G114 (EFL-22G11-4)	72A					—	8.8	47 62	
40	RF3100F11 (RF3100-F11)	100A	—	328 ft (100m)	17.13x7.87x5.19 (435x200x130)	16.06x6.54 (408x166)	—	28.6	21	Fig. 3 Separate Type
50 60 75 100 125	RF3180F11 (RF3180-F11)	180A			19.49x7.87x6.3 (495x200x160)	18.4x6.53 (468x166)	—	48.7	60	
150 200	RF3280F11 (RF3280-F11)	280A			23.11x9.84x8.07 (587x250x205)	22.05x3.35 (560x85)	—	84.8	120	Fig. 4 Separate Type
250 300 350	RF3400F11 (RF3400-F11)	400A					—	110	220	
400 450	RF3880F11 (RF3880-F11)	800A			27.09x14.33x7.09 (688x364x180)	25.51x5.91 (648x150)	—	130	180	Fig. 5 Separate Type
500 600 700 800							F200 160 [3]	142	180	

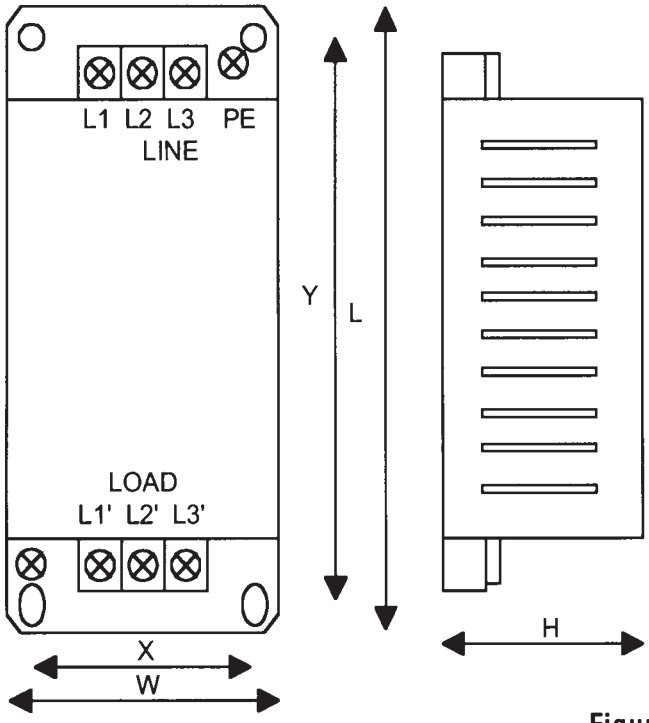

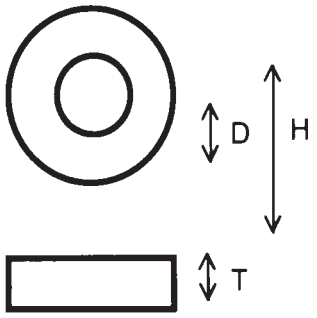

Ferrite Ring Dimensions : Inches (mm)			
Part No.	D	H	T
OF1	0.98 (25)	2.01 (51)	0.67 (17)
OF2	1.61 (41)	2.80 (71)	0.71 (18)
OF3	2.83 (72)	3.94 (100)	1.06 (27)

Figure 1

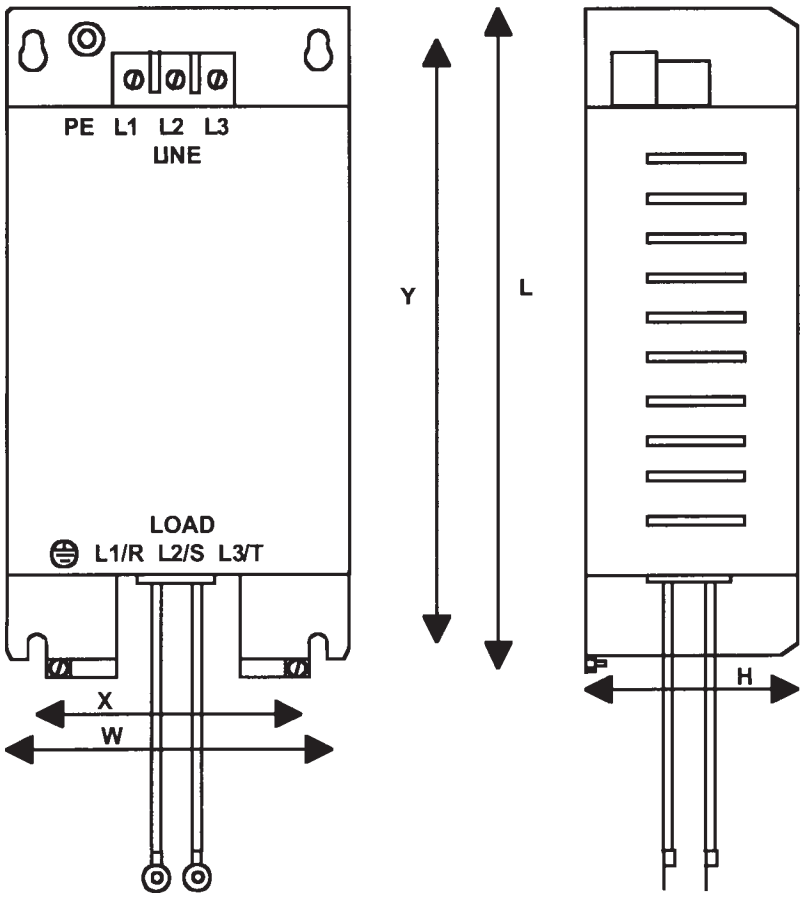

3 power cables
1 grounding cable

Figure 2

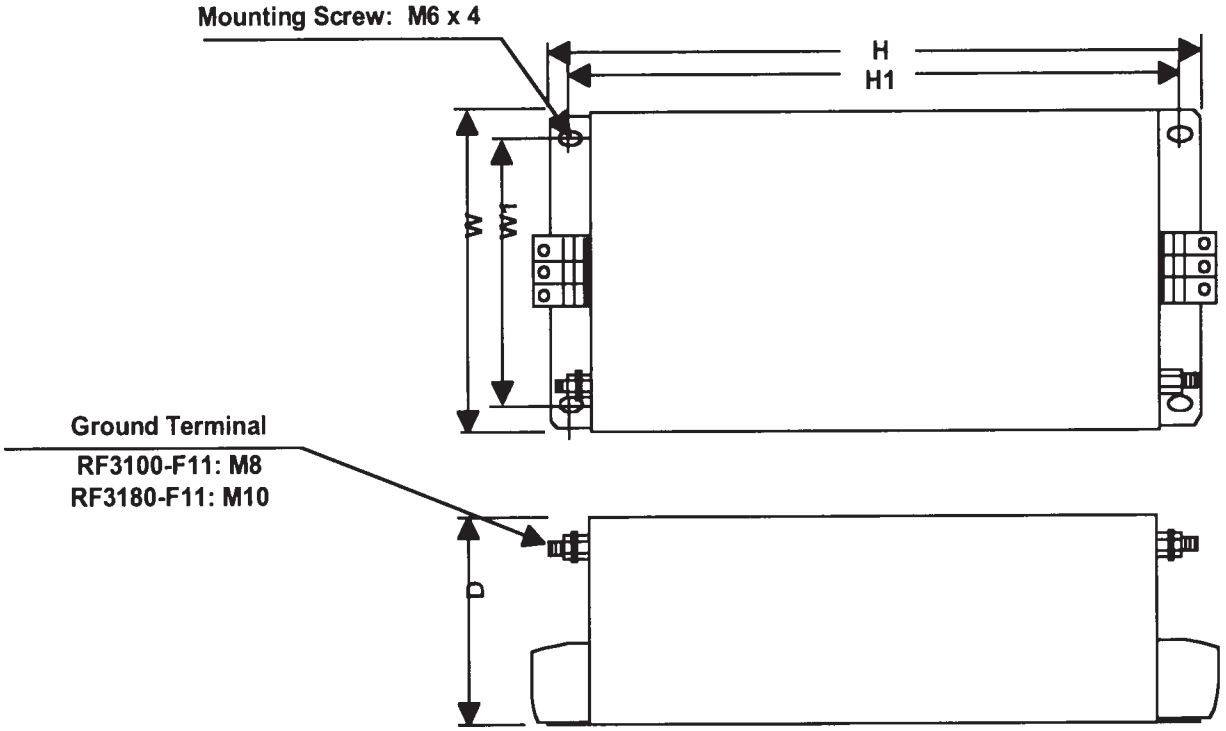

Filter Type	Dimensions : Inches (mm)				
	W	W1	H	H1	D
RF3100-F11	7.87 (200)	6.54 (166)	17.1 (435)	16.1 (408)	5.12 (130)
RF3180-F11	7.87 (200)	6.54 (166)	19.5 (495)	18.4 (468)	6.30 (160)

Figure 3 Outline Dimensions (RF3100-F11, RF3180-F11)

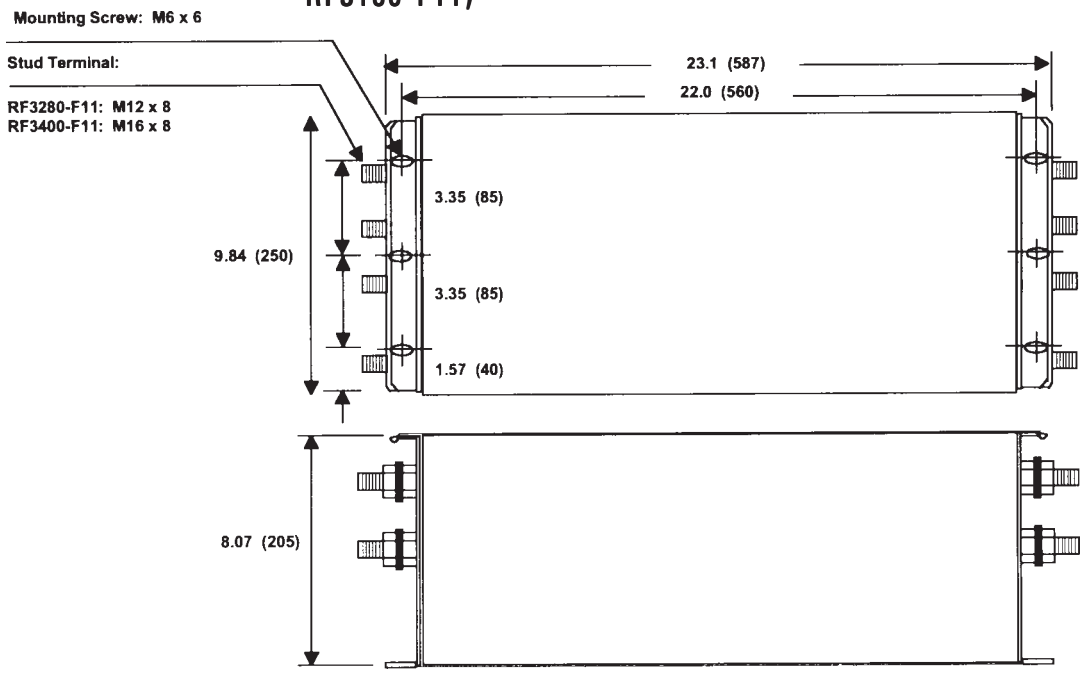

Figure 4 Outline Dimensions (RF3280-F11, RF3400-F11)

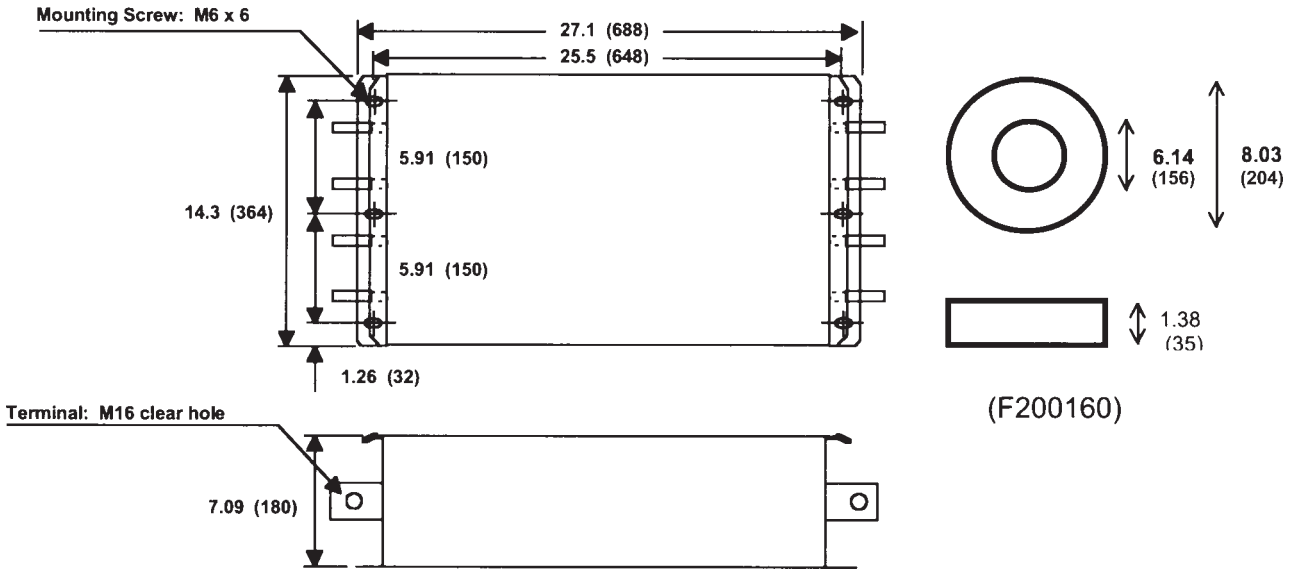

Figure 5 Outline Dimensions (RF3880-F11)

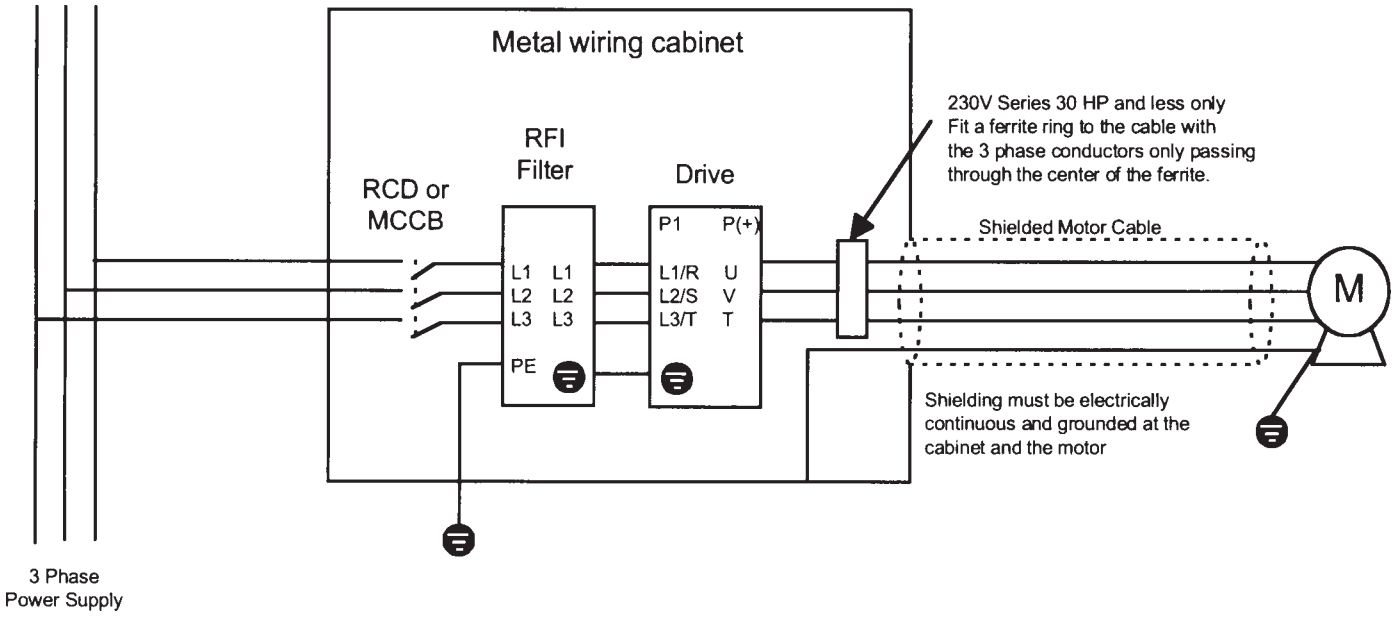

Figure 6 230V all Hp
460V less than 350 Hp

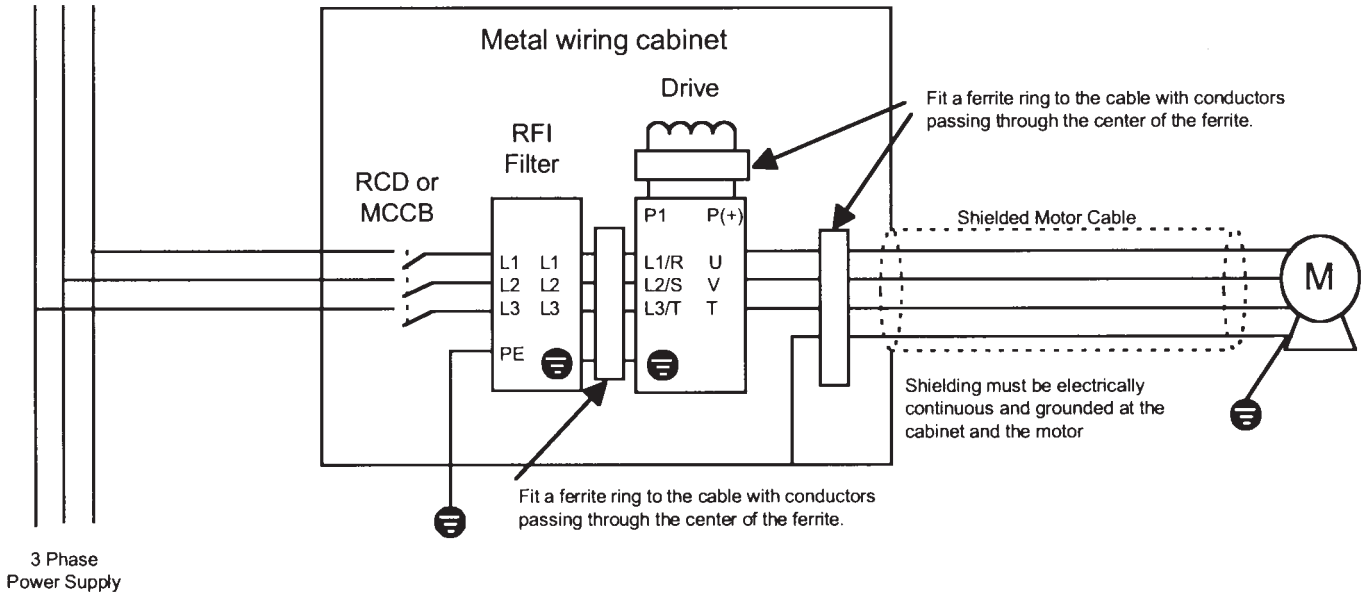

Figure 7 GP10 460V 400 Hp and higher

5580 Enterprise Parkway, Fort Myers, Florida 33905 • Telephone (941) 693-7200 • Fax (941) 693-2431

REV 1 0501
P/N 027-GP1001
©2001 Saftronics

SAFTRONICS

www.saftronics.com

GP10

General Purpose
Open Loop
Vector AC Drive

TECHNICAL MANUAL

Table of Contents

GP10 Model Number Configurator 3
Dimensions & Weights 4
Drive Ratings Efficiency and Watts Loss 7
Installation Environment and Connection 8
    Operating Environment 8
    Installation Method 8
    Connection 10
Basic Connection Diagrams 11
Connecting the Main Circuit and Ground Terminals 15
Connecting the Control Terminals 18
Terminal Configuration 22
    Main circuit terminals 22
    Control circuit terminals 23
Drive Cable Size, Tightening Torque and Circuit Protection Rating 23
DC Link Reactor 24
Function Selection 25
Protective Operations 29
    List of protective functions 29
    Alarm Reset 30
Warranty Parts and Service 31
Replacement Parts 32
Specifications 37
    Standard Specifications 37
    Common Specifications 41
Outline Dimensions - Variable Torque, Constant Torque 43
Electromagnetic Compatibility 50
    General 50
    Recommended installation instructions 50

GP10™ Model Number Configurator

Description	GP10	E1ST	3	4	010	A	1

Product Series

Enclosure

E1ST = NEMA 1
E2ST = NEMA 12
E4St = NEMA 4

Input Phases

3 = 3 Phase

Input Voltage

2 = 230V 50/60 Hz
4 = 460V 50/60 Hz

Horsepower

F50 = 1/2 Hp
010 = 10 Hp
100 = 100 Hp

Factory Use

Factory Use

GP10 Dimensions & Weights

GP10 Variable Torque/Constant Torque (VT/CT)

HP Rating (VT/CT)	NEMA Enclosure	Rated Output Current (A)	Overload (110%/150% 1min.)	GP10 Model No.	Part No.	Dimensions H x W x D (inches)	Weight (lbs)
230VAC, 3 phase, 50/60Hz Input, NEMA 1							
0.25/0.25	1	1.5/1.5	1.7/2.3	GP10E1ST32F25* *	GP102F25-1	10.24 x 4.33 x 5.12	4.8
0.5/0.5	1	3/3	3.3/4.5	GP10E1ST32F50* *	GP102F50-1	10.24 x 4.33 x 5.12	4.8
1/1	1	5/5	5.5/7.5	GP10E1ST32001* *	GP102001-1	10.24 x 4.33 x 5.71	5.5
2/2	1	8/8	8.8/12	GP10E1ST32002* *	GP102002-1	10.24 x 5.91 x 5.71	8.4
3/3	1	11/11	12/17	GP10E1ST32003* *	GP102003-1	10.24 x 5.91 x 5.71	8.4
5/5	1	17/17	19/26	GP10E1ST32005* *	GP102005-1	10.24 x 5.91 x 5.71	8.4
7.5/5	1	22/17	24/26	GP10E1ST32007* *	GP102007-1	10.24 x 8.66 x 7.68	12.6
10/7.5	1	29/25	32/38	GP10E1ST32010 * *	GP102010-1	10.24 x 8.66 x 7.68	12.6
15/10	1	42/33	46/50	GP10E1ST32015 * *	GP102015-1	10.24 x 8.66 x 7.68	12.6
20/15	1	55/45	61/69	GP10E1ST32020 * *	GP102020-1	15.75 x 9.84 x 7.68	22.0
25/20	1	68/59	75/89	GP10E1ST32025 * *	GP102025-1	15.75 x 9.84 x 7.68	22.0
30/25	1	80/74	88/110	GP10E1ST32030 * *	GP102030-1	15.75 x 9.84 x 7.68	23.1
40/30	1	115/87	127/131	GP10E1ST32040 * *	GP102040-1	29.7 x 13.5 x 10.0	70
50/40	1	145/115	160/173	GP10E1ST32050 * *	GP102050-1	29.7 x 13.5 x 10.0	70
60/50	1	180/145	198/218	GP10E1ST32060 * *	GP102060-1	33.1 x 14.9 x 10.6	86
75/60	1	215/180	215/180	GP10E1ST32075 * *	GP102075-1	38.0 x 14.9 x 10.6	106
100/75	1	283/215	283/215	GP10E1ST32100 * *	GP102100-1	38.0 x 14.9 x 10.6	110
125/100	1	346/283	346/283	GP10E1ST32125 * *	GP102125-1	41.3 x 21.0 x 11.2	172
150/125	1	415/346	415/346	GP10E1ST32150 * *	GP102150-1	50.4 x 26.9 x 14.2	282
230VAC, 3 phase, 50/60Hz Input, NEMA 4							
0.25/0.25	4	1.5/1.5	1.7/2.3	GP10E4ST32F25 * *	GP102F25-4	10.24 x 4.33 x 5.12	4.8
0.5/0.5	4	3/3	3.3/4.5	GP10E4ST32F50 * *	GP102F50-4	10.24 x 4.33 x 5.12	4.8
1/1	4	5/5	5.5/7.5	GP10E4ST32001 * *	GP102001-4	10.24 x 4.33 x 5.71	5.5
2/2	4	8/8	8.8/12	GP10E4ST32002 * *	GP102002-4	10.24 x 5.91 x 5.71	8.4
3/3	4	11/11	12/17	GP10E4ST32003 * *	GP102003-4	10.24 x 5.91 x 5.71	8.4
5/5	4	17/17	19/26	GP10E4ST32005 * *	GP102005-4	10.24 x 5.91 x 5.71	8.4
7.5/5	4	22/17	24/26	GP10E4ST32007 * *	GP102007-4	10.24 x 8.66 x 7.68	12.6
10/7.5	4	29/25	32/38	GP10E4ST32010 * *	GP102010-4	10.24 x 8.66 x 7.68	12.6
15/10	4	42/33	46/50	GP10E4ST32015 * *	GP102015-4	10.24 x 8.66 x 7.68	12.6
230VAC, 3 phase, 50/60Hz Input, NEMA 12							
20/15	12	55/45	61/69	GP10E2ST32020 * *	GP102020-2	15.75 x 9.84 x 7.68	22.0
25/20	12	68/59	75/89	GP10E2ST32025 * *	GP102025-2	15.75 x 9.84 x 7.68	22.0
30/25	12	80/74	88/110	GP10E2ST32030 * *	GP102030-2	15.75 x 9.84 x 7.68	23.1
230VAC, 3 phase, 50/60Hz Input, Open							
40/30	Open	115/87	127/131	GP10E9ST32040 * *	GP102040-9	21.7 x 13.4 x 10.0	64
50/40	Open	145/115	160/173	GP10E9ST32050 * *	GP102050-9	21.7 x 13.4 x 10.0	64
60/50	Open	180/145	198/218	GP10E9ST32060 * *	GP102060-9	24.2 x 14.8 x 10.6	79
75/60	Open	215/180	237/270	GP10E9ST32075 * *	GP102075-9	29.1 x 14.8 x 10.6	97
100/75	Open	283/215	311/323	GP10E9ST32100 * *	GP102100-9	29.1 x 14.8 x 10.6	101
125/100	Open	346/283	381/425	GP10E9ST32125 * *	GP102125-9	29.5 x 20.9 x 11.2	154
150/125	Open	415/346	457/519	GP10E9ST32150 * *	GP102150-9	34.6 x 26.8 x 14.2	253

* *Indicates factory use.

Note: Hp rating is shown for 230V and 460V nominal systems.

When applying at lower voltage, select the drive by rated current and not Hp rating.

GP10 Dimensions & Weights

GP10 Variable Torque/Constant Torque (VT/CT)

HP Rating (VT/CT)	NEMA Enclosure	Rated Output Current (A)	Overload (110%/150% 1min.)	GP10 Model No.	Part No.	Dimensions H x W x D (inches)	Weight (lbs)
230VAC, 3 phase, 50/60Hz Input, Open with NEMA 12 Heatsink							
40/30	Open	115/87	127/131	GP10E8ST32040 * *	GP102040-8	21.7 x 13.4 x 10.0	64
50/40	Open	145/115	160/173	GP10E8ST32050 * *	GP102050-8	21.7 x 13.4 x 10.0	64
60/50	Open	180/145	198/218	GP10E8ST32060 * *	GP102060-8	24.2 x 14.8 x 10.6	79
75/60	Open	215/180	237/270	GP10E8ST32075 * *	GP102075-8	29.1 x 14.8 x 10.6	97
100/75	Open	283/215	311/323	GP10E8ST32100 * *	GP102100-8	29.1 x 14.8 x 10.6	101
125/100	Open	346/283	381/425	GP10E8ST32125 * *	GP102125-8	29.5 x 20.9 x 11.2	154
150/125	Open	415/346	457/519	GP10E8ST32150 * *	GP102150-8	34.6 x 26.8 x 14.2	253
460VAC, 3 phase, 50/60Hz Input, NEMA 1							
0.5/0.5	1	1.5/1.5	1.7/2.3	GP10E1ST34F50 * *	GP104F50-1	10.24 x 4.33 x 5.12	4.8
1/1	1	2.5/2.5	2.8/3.8	GP10E1ST34001 * *	GP104001-1	10.24 x 4.33 x 5.71	5.5
2/2	1	3.7/3.7	4.1/5.6	GP10E1ST34002 * *	GP104002-1	10.24 x 5.91 x 5.71	8.4
3/3	1	5.5/5.5	6.1/8.3	GP10E1ST34003 * *	GP104003-1	10.24 x 5.91 x 5.71	8.4
5/5	1	9/9	9.9/14	GP10E1ST34005 * *	GP104005-1	10.24 x 5.91 x 5.71	8.4
7.5/5	1	12.5/9	14/14	GP10E1ST34007 * *	GP104007-1	10.24 x 8.66 x 7.68	13.4
10/7.5	1	16.5/13	18/20	GP10E1ST34010 * *	GP104010-1	10.24 x 8.66 x 7.68	13.4
15/10	1	23/18	25/27	GP10E1ST34015 * *	GP104015-1	10.24 x 8.66 x 7.68	13.4
20/15	1	30/24	33/36	GP10E1ST34020 * *	GP104020-1	15.75 x 9.84 x 7.68	22.0
25/20	1	37/30	41/45	GP10E1ST34025 * *	GP104025-1	15.75 x 9.84 x 7.68	22.0
30/25	1	44/39	48/59	GP10E1ST34030 * *	GP104030-1	15.75 x 9.84 x 7.68	23.1
40/30	1	60/45	66/68	GP10E1ST34040 * *	GP104040-1	29.7 x 13.5 x 10.0	70
50/40	1	75/60	83/90	GP10E1ST34050 * *	GP104050-1	29.7 x 13.5 x 10.0	70
60/50	1	91/75	100/113	GP10E1ST34060 * *	GP104060-1	29.7 x 14.9 x 10.6	82
75/60	1	112/91	123/137	GP10E1ST34075 * *	GP104075-1	34.6 x 14.9 x 10.6	95
100/75	1	150/112	165/168	GP10E1ST34100 * *	GP104100-1	34.6 x 14.9 x 10.6	97
125/100	1	176/150	194/225	GP10E1ST34125 * *	GP104125-1	38.0 x 14.9 x 10.6	115
150/125	1	210/176	231/264	GP10E1ST34150 * *	GP104150-1	38.0 x 21.0 x 12.4	174
200/150	1	253/210	278/315	GP10E1ST34200 * *	GP104200-1	38.0 x 21.0 x 12.4	174
250/200	1	304/253	334/380	GP10E1ST34250 * *	GP104250-1	53.1 x 21.0 x 14.2	245
300/250	1	377/304	415/456	GP10E1ST34300 * *	GP104300-1	53.1 x 21.0 x 14.2	245
350/300	1	415/377	457/566	GP10E1ST34350 * *	GP104350-1	55.1 x 26.9 x 14.2	337
400/350	1	485/415	534/623	GP10E1ST34400 * *	GP104400-1	55.1 x 26.9 x 14.2	337
450/350	1	520/415	572/623	GP10E1ST34450 * *	GP104450-1	55.1 x 26.9 x 14.2	337
500/400	1	650/520	715/780	GP10E1ST34500 * *	GP104500-1	57.1 x 26.8 x 17.7	562
600/450	1	740/585	814/878	GP10E1ST34600 * *	GP104600-1	57.1 x 26.8 x 17.7	562
700/500	1	840/650	924/975	GP10E1ST34700 * *	GP104700-1	57.1 x 34.6 x 17.7	804
800/600	1	960/740	1056/1110	GP10E1ST34800 * *	GP104800-1	57.1 x 34.6 x 17.7	804
460VAC, 3 phase, 50/60Hz Input, NEMA 4							
0.5/0.5	4	1.5/1.5	1.7/2.3	GP10E4ST34F50##	GP104F50-4	10.24 x 4.33 x 5.12	4.8
1/1	4	2.5/2.5	2.8/3.8	GP10E4ST34001##	GP104001-4	10.24 x 4.33 x 5.71	5.5
2/2	4	3.7/3.7	4.1/5.6	GP10E4ST34002##	GP104002-4	10.24 x 5.91 x 5.71	8.4
3/3	4	5.5/5.5	6.1/8.3	GP10E4ST34003##	GP104003-4	10.24 x 5.91 x 5.71	8.4
5/5	4	9/9	9.9/14	GP10E4ST34005##	GP104005-4	10.24 x 5.91 x 5.71	8.4
7.5/5	4	12.5/9	14/14	GP10E4ST34007##	GP104007-4	10.24 x 8.66 x 7.68	13.4
10/7.5	4	16.5/13	18/20	GP10E4ST34010##	GP104010-4	10.24 x 8.66 x 7.68	13.4
15/10	4	23/18	25/27	GP10E4ST34015##	GP104015-4	10.24 x 8.66 x 7.68	13.4

**Indicates factory use.

Note: Hp rating is shown for 230V and 460V nominal systems.

When applying at lower voltage, select the drive by rated current and not Hp rating.

GP10 Dimensions & Weights

GP10 Variable Torque/Constant Torque (VT/CT)

HP Rating (VT/CT)	NEMA Enclosure	Rated Output Current (A)	Overload (110%/150% 1min.)	GP10 Model No.	Part No.	Dimensions H x W x D (inches)	Weight (lbs)
460VAC, 3 phase, 50/60Hz Input, NEMA 12							
20/15	12	30/24	33/36	GP10E2ST34020 * *	GP104020-2	15.75 x 9.84 x 7.68	22.0
25/20	12	37/30	41/45	GP10E2ST34025 * *	GP104025-2	15.75 x 9.84 x 7.68	22.0
30/25	12	44/39	48/59	GP10E2ST34030 * *	GP104030-2	15.75 x 9.84 x 7.68	23.1
460VAC, 3 phase, 50/60Hz Input, Open							
40/30	Open	60/45	66/68	GP10E9ST34040 * *	GP104040-9	21.7 x 13.4 x 10.0	64
50/40	Open	75/60	83/90	GP10E9ST34050 * *	GP104050-9	21.7 x 13.4 x 10.0	64
60/50	Open	91/75	100/113	GP10E9ST34060 * *	GP104060-9	21.7 x 14.8 x 10.6	75
75/60	Open	112/91	123/137	GP10E9ST34075 * *	GP104075-9	26.6 x 14.8 x 10.6	86
100/75	Open	150/112	165/168	GP10E9ST34100 * *	GP104100-9	26.6 x 14.8 x 10.6	88
125/100	Open	176/150	194/225	GP10E9ST34125 * *	GP104125-9	29.1 x 14.8 x 10.6	106
150/125	Open	210/176	231/264	GP10E9ST34150 * *	GP104150-9	29.1 x 20.9 x 12.4	154
200/150	Open	253/210	278/315	GP10E9ST34200 * *	GP104200-9	29.1 x 20.9 x 12.4	154
250/200	Open	304/253	334/380	GP10E9ST34250 * *	GP104250-9	39.4 x 20.9 x 14.2	220
300/250	Open	377/304	415/456	GP10E9ST34300 * *	GP104300-9	39.4 x 20.9 x 14.2	220
350/300	Open	415/377	457/566	GP10E9ST34350 * *	GP104350-9	39.4 x 26.8 x 14.2	308
400/350	Open	485/415	534/623	GP10E9ST34400 * *	GP104400-9	39.4 x 26.8 x 14.2	308
450/350	Open	520/415	572/623	GP10E9ST34450 * *	GP104450-9	39.4 x 26.8 x 14.2	308
500/400	Open	650/520	715/780	GP10E9ST34500 * *	GP104500-9	55.1 x 26.8 x 17.7	551
600/450	Open	740/585	814/878	GP10E9ST34600 * *	GP104600-9	55.1 x 26.8 x 17.7	551
700/500	Open	840/650	924/975	GP10E9ST34700 * *	GP104700-9	55.1 x 35.6 x 17.7	793
800/600	Open	960/740	1056/1110	GP10E9ST34800 * *	GP104800-9	55.1 x 35.6 x 17.7	793
460VAC, 3 phase, 50/60Hz Input, Open with NEMA 12 Heatsink							
40/30	Open	60/45	66/68	GP10E8ST34040 * *	GP104040-8	21.7 x 13.4 x 10.0	64
50/40	Open	75/60	83/90	GP10E8ST34050 * *	GP104050-8	21.7 x 13.4 x 10.0	64
60/50	Open	91/75	100/113	GP10E8ST34060 * *	GP104060-8	21.7 x 14.8 x 10.6	75
75/60	Open	112/91	123/137	GP10E8ST34075 * *	GP104075-8	26.6 x 14.8 x 10.6	86
100/75	Open	150/112	165/168	GP10E8ST34100 * *	GP104100-8	26.6 x 14.8 x 10.6	88
125/100	Open	176/150	194/225	GP10E8ST34125 * *	GP104125-8	29.1 x 14.8 x 10.6	106
150/125	Open	210/176	231/264	GP10E8ST34150 * *	GP104150-8	29.1 x 20.9 x 12.4	154
200/150	Open	253/210	278/315	GP10E8ST34200 * *	GP104200-8	29.1 x 20.9 x 12.4	154
200/150	Open	304/253	334/380	GP10E8ST34250 * *	GP104250-8	39.4 x 20.9 x 14.2	220
250/200	Open	377/304	415/456	GP10E8ST34300 * *	GP104300-8	39.4 x 20.9 x 14.2	220
300/250	Open	415/377	457/566	GP10E8ST34350 * *	GP104350-8	39.4 x 26.8 x 14.2	308
350/300	Open	485/415	534/623	GP10E8ST34400 * *	GP104400-8	39.4 x 26.8 x 14.2	308
400/350	Open	520/415	572/623	GP10E8ST34450 * *	GP104450-8	39.4 x 26.8 x 14.2	308
500/400	Open	650/520	715/780	GP10E8ST34500 * *	GP104500-8	55.1 x 26.8 x 17.7	551
600/450	Open	740/585	814/878	GP10E8ST34600 * *	GP104600-8	55.1 x 26.8 x 17.7	551
700/500	Open	840/650	924/975	GP10E8ST34700 * *	GP104700-8	55.1 x 35.6 x 17.7	793
800/600	Open	960/740	1056/1110	GP10E8ST34800 * *	GP104800-8	55.1 x 35.6 x 17.7	793

** Indicates factory use.

Note: Hp rating is shown for 230V and 460V nominal systems.

When applying at lower voltage, select the drive by rated current and not Hp rating.

GP10 Drive Ratings Efficiency and Watts Loss

HP Rating	Rated Output Current (A)	Rated Output Power (KVA)	Efficiency at 2KHz (%)	Efficiency at 15KHz (%)	Watts Loss at 2KHz (W)	Watts Loss at 15KHz (W)	Internal DB (W)
230VAC							
0.25	1.5	0.59	92.0	90.5	25	30	N/A
0.5	3	1.1	93.5	91.7	35	45	N/A
1	5	1.9	94.9	94.0	50	60	N/A
2	8	3.1	95.7	94.1	80	110	N/A
3	11	4.3	95.9	94.9	110	140	N/A
5	17	6.7	96.2	95.4	170	210	N/A
7.5	22	8.7	96.2	95.2	210	280	N/A
10	29	11	96.5	95.3	290	370	N/A
15	42	16	96.4	95.2	410	550	N/A
20	55	21	96.9	95.9	500	670	N/A
25	67	26	96.8	95.8	630	840	N/A
30	78	31	96.5	95.5	770	1030	N/A
			2KHz (%)	10KHz (%)	2KHz (W)	10KHz (W)	
40	115	45	97.2	96.8	950	1100	N/A
50	145	57	97.0	96.7	1250	1400	N/A
60	180	71	97.1	96.6	1500	1750	N/A
75	215	85	97.3	96.6	1700	1950	N/A
100	283	112	97.4	97.0	2200	2500	N/A
			2KHz (%)	6KHz (%)	2KHz (W)	6KHz (W)	
125	346	137	97.4	97.2	2650	2800	N/A
150	415	165	97.4	97.3	3200	3350	N/A
460VAC							
0.5	1.5	1.1	93.5	89.3	35	60	N/A
1	2.5	1.9	95.4	91.7	45	85	N/A
2	3.7	2.9	96.7	94.1	60	110	N/A
3	5.5	4.3	97.0	94.5	80	150	N/A
5	9	7.1	97.1	95.0	130	230	N/A
7.5	12.5	9.9	97.3	95.3	160	290	N/A
10	16.5	13.1	97.3	95.4	210	370	N/A
15	23	18.3	97.6	95.9	300	520	N/A
20	30	23.9	97.9	96.5	360	610	N/A
25	37	29.4	97.8	96.4	460	770	N/A
30	44	35	97.8	96.4	530	870	N/A
			2KHz (%)	10KHz (%)	2KHz (W)	10KHz (W)	
40	60	47	97.8	96.9	750	1050	N/A
50	75	59	97.7	96.9	950	1300	N/A
60	91	72	97.8	97.0	1100	1550	N/A
75	112	89	97.8	97.0	1350	1900	N/A
100	150	119	97.8	97.1	1800	2450	N/A
			2KHz (%)	6KHz (%)	2KHz (W)	6KHz (W)	
125	176	140	98.1	97.8	1850	2200	N/A
150	210	167	98.0	97.8	2400	2750	N/A
200	253	202	98.0	97.7	2900	3350	N/A
250	304	242	98.1	97.8	3250	3800	N/A
300	377	300	98.1	97.8	4250	4900	N/A
350	415	330	98.2	97.9	4350	5100	N/A
400	485	386	98.1	97.8	5100	5900	N/A
450	520	414	98.1	97.8	5700	6650	N/A
500	650	518	98.2	97.9	6900	8050	N/A
600	740	590	98.1	97.8	8050	9350	N/A
700	840	669	98.2	97.9	8900	10400	N/A
800	960	765	98.1	97.8	10300	12100	N/A

Installation Environment and Connection

1. Operating Environment

Install this product in a location that meets the conditions listed in Table below.

Table: Operating Environment

Item	Specifications
Location	Indoors
Ambient Temperature	-10° to +50°C (+14° to +122°F) - for products of 30 HP or less, the ventilating covers must be removed if ambient temperature exceeds +40°C (104°F), NEMA Type 4 & 12 Unit -10° to +40°C (+14° to +104°F)
Relative Humidity	5 to 95% (No condensation).
Atmosphere	The product must not be exposed to dust, direct sunlight, corrosive gas, oil mist, vapor, or water. There must be a minimum salt content in the atmosphere. Do not store where condensation may occur as a result of sudden changes in temperature.
Altitude	1000 m (3300 feet) or lower - For altitude above 1000 m (3300 feet), see Table 2-1-2.
Vibration	3mm peak from 2 to 9Hz, 9.8m/s2 from 9 to 20Hz, 2m/s2 from 20-55Hz, 1m/s2 from 55 to 200Hzs.

2. Installation Method

1. Securely fasten the product in an upright position on a solid structure with the logo facing the front. Do not turn the product upside down or install in a horizontal position. Fig. 2-2-1
2. Since heat is generated during drive operation, the spaces shown in Fig. 2-2-1 are required to ensure sufficient cooling. Do not install the product beneath a device sensitive to heat as heat radiates upward.
3. The heat sink may reach a temperature of 90°C (+194°F) during drive operation. Ensure that the material surrounding the product can withstand this temperature.

WARNING

Install this product on nonflammable material such as metal.

4. When installing this product in a control panel, consider ventilation to prevent the drive's ambient temperature from exceeding the specified value. Do not install the product in an area from which heat cannot be sufficiently released.
5. If two or more drives must be installed in the same device or control panel, arrange the units horizontally to minimize the effect of heat. If two or more drives must be installed vertically, place an insulated plate between the drives to minimize the effect of heat.
6. When shipped from the factory, drives provide internal cooling inside the panel. A drive of 30HP or less can be converted to external cooling simply by adding an optional mounting adapter.

CAUTION

Ensure that the drive and heat sink surfaces are kept free of foreign matter such as lint, paper dust, small chips of wood or metal, and dust. **Fire or accident may result.**

Table 2-1-2 Output current reduction rate based on altitude

Altitude	Output current reduction rate
3300 feet (1000m or lower)	1
3300-4950 feet (1000-1500m)	0.97
4950-6600 feet (1500-2000m)	0.95
6600-8250 feet (2000-2500m)	0.91
8250-9900 feet (2500-3000m)	0.88

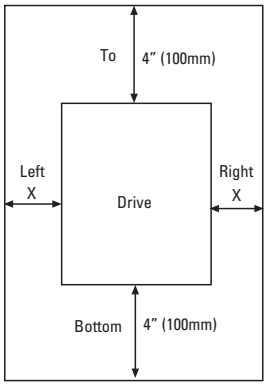

Fig. 2-2-1 30 HP or less: Gap X can be 0. (side-by-side installation) 40HP or more: Gap X >= 2.0" (50mm)

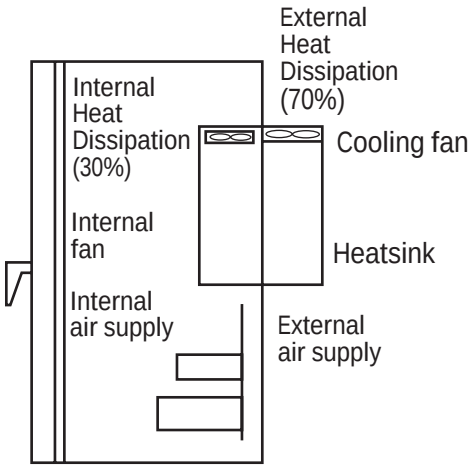

Fig. 2-2-2 Through Panel Mount

A drive of 40HP or more can be converted to external cooling simply by moving the upper and lower mounting brackets as shown in Fig. 2-2-3. Remove the M6 bracket screws, move the brackets, then secure the brackets using the M5 case mounting screws. (The bracket screws are no longer required after changing the bracket mounting position.)

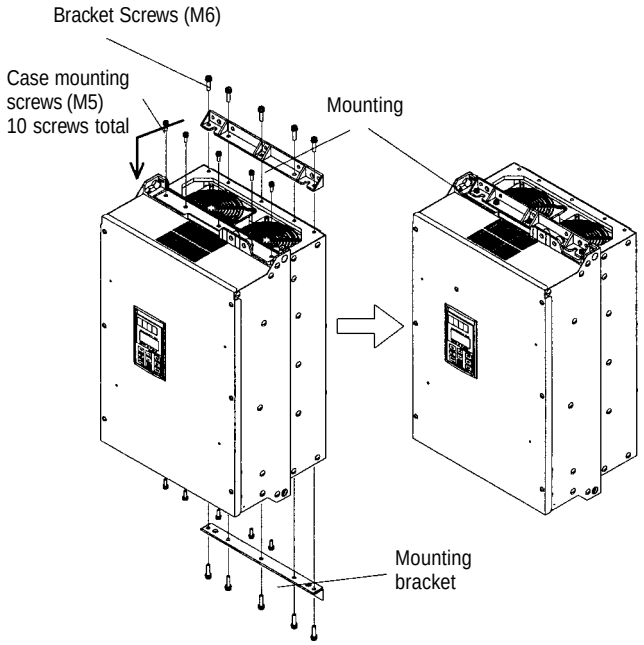

Fig. 2-2-3

In an external cooling system, a heat sink radiating about 70% of total drive heat (total loss) can be placed outside the device or control panel, as shown in Fig. 2-2-2.

7. For drives of 30HP or less, remove the ventilating covers if ambient temperature exceeds +40°C (104°F).

1. Removing the Ventilating Covers

One ventilating cover is mounted on top of the drive and two or three are mounted at the bottom. Remove the main cover and then remove ventilating covers by popping out the cover inserts as shown in Fig. 2-2-4.

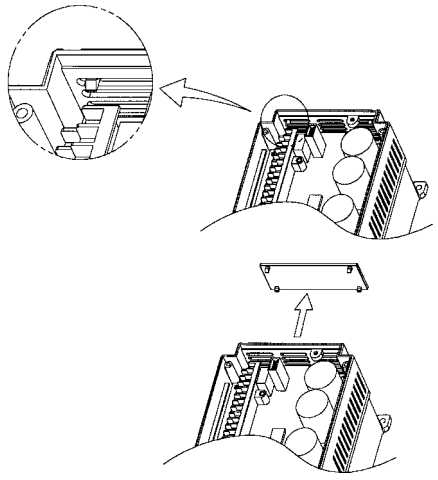

Fig. 2-2-4 Removing the ventilating cover

Installation of Open Type with NEMA 12 Heatsink Drive (40 Hp and above)

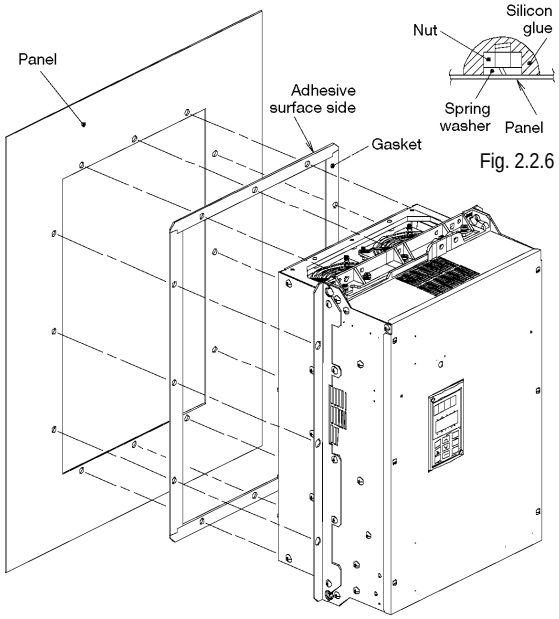

Fig. 2.2.6

Fig.2.2.5

1. Remove adhesive protection strip from gasket and then mount gasket to panel/enclosure, carefully aligning cutout and mounting holes.
2. Install the drive unit and tighten the mounting bolt and nut. (Tightening torque: 119 lbs-inch [M8], 425 lbs-inch [M12]). Mounting hardware to be supplied by customer. (refer to figure 2.2.5)
3. After proper torque has been applied to all mounting hardware, seal the outside end of the hardware with silicon glue. Silicon glue to be supplied by the customer. (Refer to Fig. 2.2.6)

3. Connection

Remove the main cover before connecting the terminal blocks as follows.

Basic Connection

1. Always connect power to the L1/R, L2/S, and L3/T main circuit power terminals on the drive. Connecting power to another terminal will damage the drive. Check that the input voltage is within the maximum allowable voltage marked on the nameplate, etc.
2. Always wire the ground terminal to ground to prevent problems such as fire or electric shock and to minimize noise.
3. Use a reliable crimp terminal for connection between a power terminal and a power wire.
4. After terminating the wiring connection, confirm the following:
   a. Confirm that the connection is correct.
   b. Confirm that all necessary connections have been made.
   c. Confirm that there is no short-circuit or ground fault between the terminals and wire.
5. Connection modification after power-on.
   The smoothing capacitor in the direct current portion of the main circuit cannot be discharged immediately after the power is turned off. To insure safety, use a multimeter to check that the direct current (DC) voltage is lowered to the safety range (25V DC or less) after the charge lamp goes off. Also, confirm that the voltage is zero before short-circuiting. The residual voltage (electric charge) may cause sparks.

> WARNING
>
> Always connect a ground wire. Electric shock or fire may result. Ensure that a trained specialist performs all wiring. Confirm that the power is turned off (open) before beginning any wiring operations. Electrical shock may result.

Basic Connection Diagram (Sink Logic)

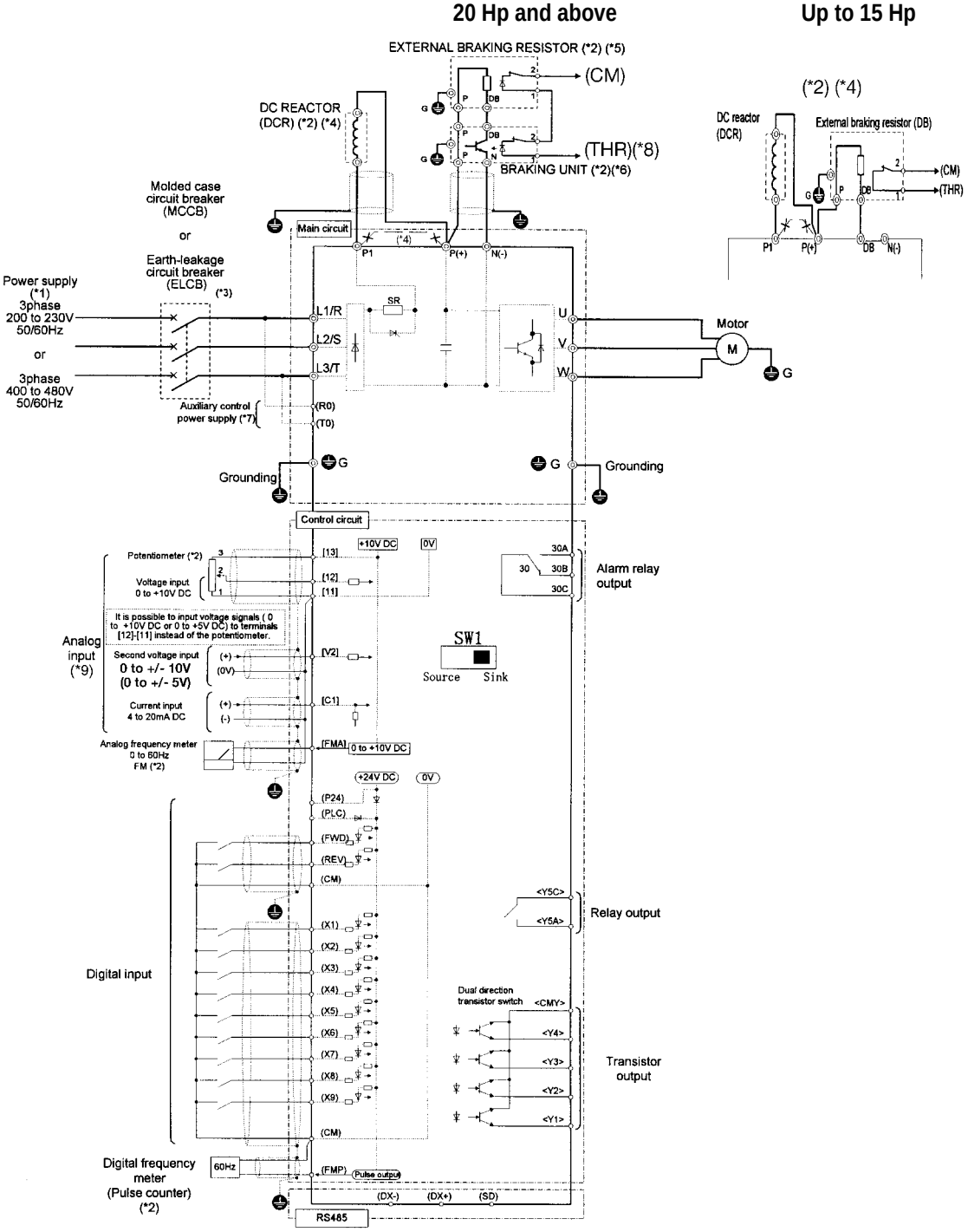

Note: The control circuit common terminals [11], (CM) and <CMY> are isolated

(*1) Use a drive with rated voltage matching the power supply voltage.
(*2) Use as required.
(*3) Use this peripheral device when necessary.
(*4) Remove the jumper wire between P1 and P(+) before connecting a DC REACTOR.
(*5) Be sure to use the braking unit (option) when connecting the external braking resistor (option)
(*6) Connect the braking unit to P(+) ans N(-). The auxiliary terminals [1] and [2] have polarity.
Connect them as shown in the figure above.
(*7) The drive can be operated without connecting the auxiliary control power supply.
(*8) Terminal (X1) to (X9) can be set to 9 (THR) - Braking unit thermal trip input.
(*9) If using V2 or C1, as a reference signal, they must be used exclusively.
(*10) It is possible to input voltage signals (0 to +10 VDC or 0 to +5 VDC) to terminals [12] [11] instead of the potentiometer.

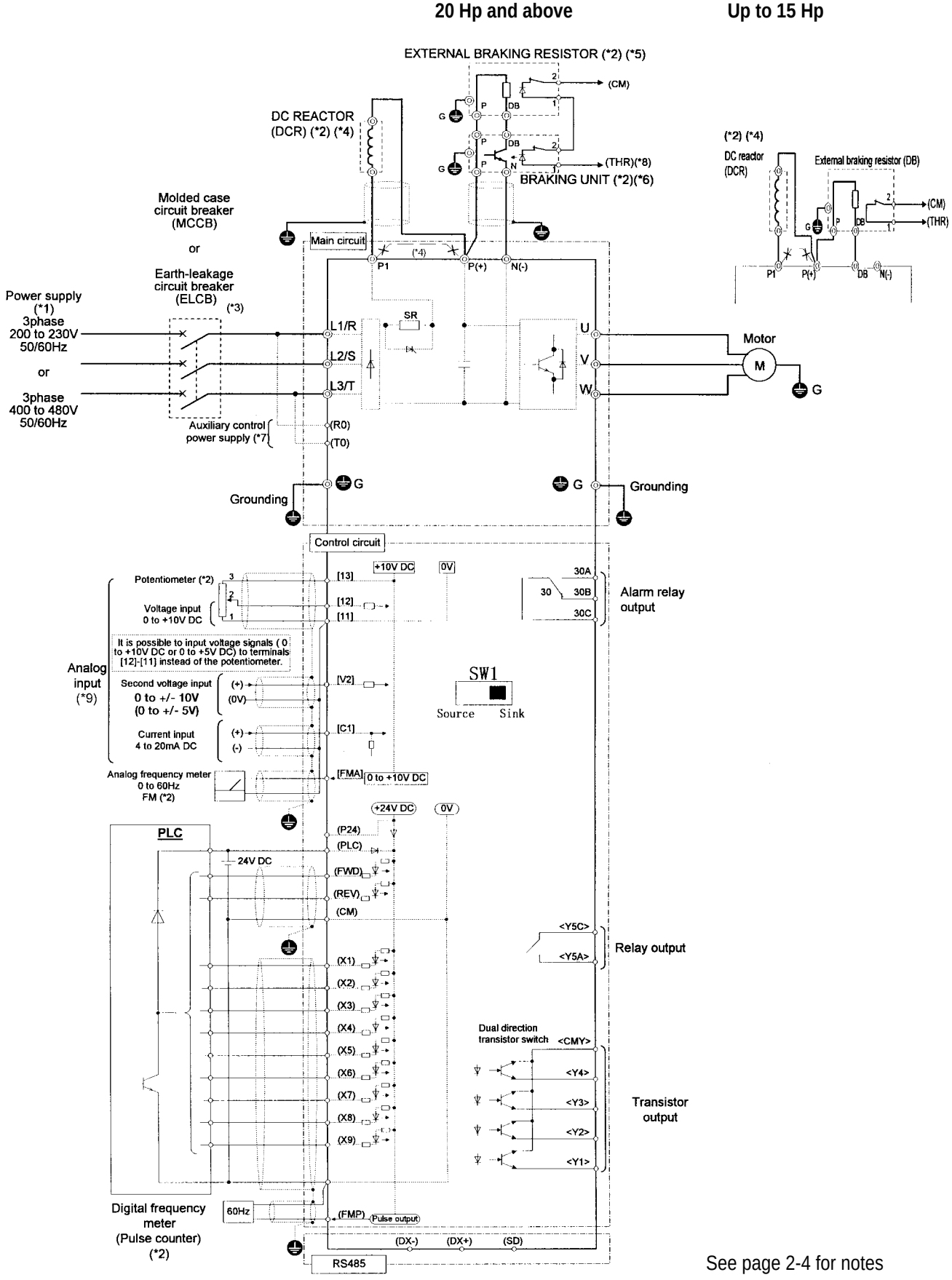

See page 2-4 for notes

Basic Connection Diagram (Source Logic, Typically used in Europe)

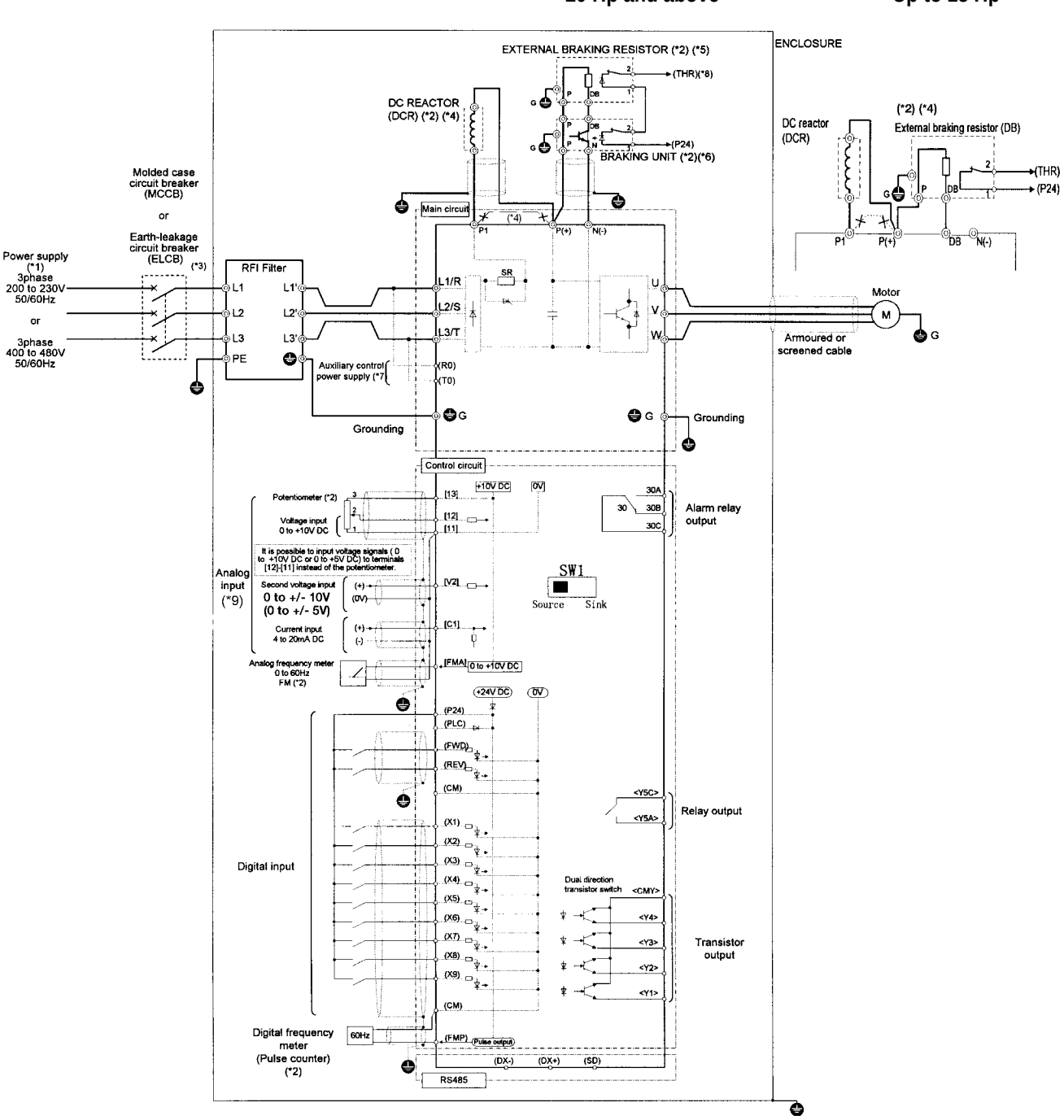

Note: The control circuit common terminals [11], (CM) and <CMY> are isolated

(*1) Use a drive with rated voltage matching the power supply voltage.
(*2) Use as required.
(*3) Use this peripheral device when necessary.
(*4) Remove the jumper wire between P1 and P(+) before connecting a DC REACTOR.
(*5) Be sure to use the braking unit (option) when connecting the external braking resistor (option).
(*6) Connect the braking unit to P(+) ans N(-). The auxiliary terminals [1] and [2] have polarity.
Connect them as shown in the figure above.
(*7) The drive can be operated without connecting the auxiliary control power supply.
(*8) Terminal (X1) to (X9) can be set to 9 (THR) - Braking unit thermal trip input.
(*9) If using V2 or C1, as a reference signal, they must be used exclusively.
(*10) It is possible to input voltage signals (0 to +10 VDC or 0 to +5 VDC) to terminals [12] [11] instead of the potentiometer.

20 Hp and above **Up to 15 Hp**

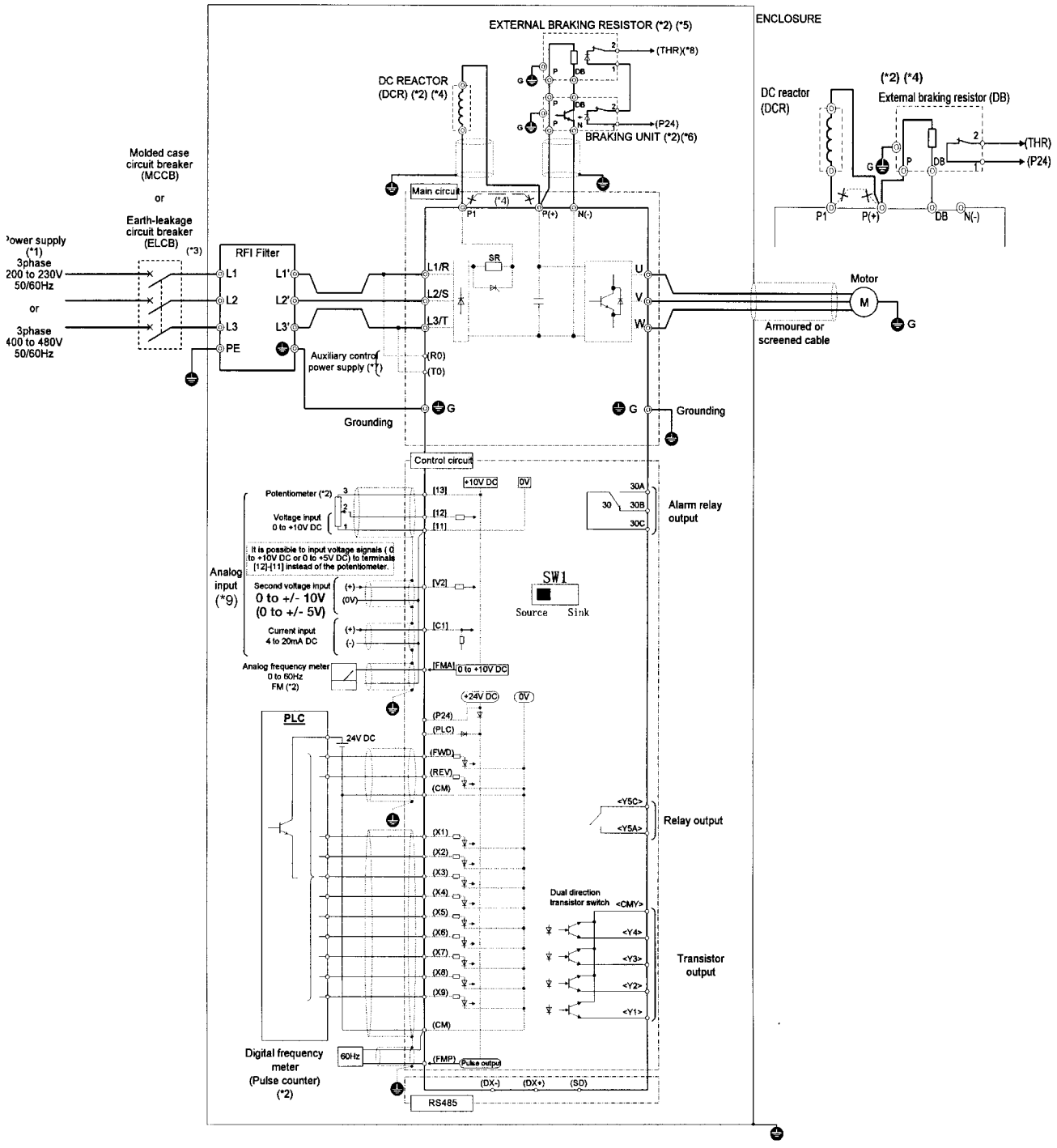

See page 2-6 for notes

Table: Functions of main circuit terminals and ground termnals

Symbol	Terminal Name	Description
L1/R,L2/S,L3/T	Main circuit power terminals	Connects a 3-phase power supply
U,V,W	Inverter output terminals	Connects a 3-phase motor
R0,T0	Input terminals for auxiliary control power	Connects a backup AC power supply to the control circuit (not supported for drives of 1 Hp or less)
P1,P(+)	DC reactor terminals	Connects the optional power correcting DC reactor
P(+),DB	Terminals for external braking resistor	Connects the optional external braking resistor (for drives of 15 Hp or less)
P(+),N(-)	Terminals for DC link circuit	Supplies DC link circuit voltage to the external braking unit (option) or power regeneration unit (option).
G	Ground terminal	Connects the drive chassis (case) to ground.

(1) Main circuit power terminals (L1/R, L2/S, L3/T)

1. Connect these terminals to the power supply via a molded-case circuit breaker or ground-leakage circuit breaker for circuit protection. Phase-sequence matching is unnecessary.
2. To insure safety, a magnetic contactor should be used to disconnect the drive from the power supply when the drive protective function activates.
3. Use control circuit terminal FWD/REV or the RUN/STOP key on the keypad panel to start or stop the drive. The main circuit power should be used to start or stop the drive only if absolutely necessary and then should not be used more than once every hour.
4. If you need to connect these terminals to a single-phase power supply, please contact the factory.

(2) Drive output terminals (U, V, W)

1. Connect these terminals to a 3-phase motor in the correct phase sequence. If the direction of motor rotation is incorrect, exchange any two of the U, V, and W phases.
2. Do not connect a power factor correction capacitor or surge absorber to the drive output.
3. If the cable from the drive to the motor is very long, a high-frequency current may be generated by stray capacitance between the cables and result in an overcurrent trip of the drive, an increase in leakage current, or a reduction in current indication precision.

When a motor is driven by a PWM-type drive, the motor terminals may be subject to surge voltage generated by drive element switching. If the motor cable (with 460V series motors, in particular) is particularly long, surge voltage will deteriorate motor insulation. To prevent this, use the following guidelines:

Drives 7.5 HP and larger			
Motor Insulation Level	1000V	1300V	1600V
460 VAC Input Voltage	66 ft (20 m)	328 ft (100 m)	1312 ft (400 m) *
230 VAC Input Voltage	1312 ft (400 m) *	1312 ft (400 m) *	1312 ft (400 m) *

Drives 5 HP and smaller			
Motor Insulation Level	1000V	1300V	1600V
460 VAC Input Voltage	66 ft (20 m)	165 ft (50 m) *	165 ft (50 m) *
230 VAC Input Voltage	328 ft (100 m) *	328 ft (100 m) *	328 ft (100 m) *
* For this case the cable length is determined by secondary effects and not voltage spiking.			

Note: When a motor protective thermal O/L relay is inserted between the drive and the motor, the thermal O/L relay may malfunction (particularly in the 460V series), even when the cable length is 165 feet (50m) or less. To correct, insert a filter or reduce the carrier frequency. (Use function code “F26 Motor sound”.)

(3) Input terminals for auxiliary control power (R0 and T0)

The drive operates even if power is not provided to these terminals. If a protective circuit operates, and the magnetic contactor on the drive's power is opened (off), the inverter control circuit power, the alarm output (30A, B, and C), and the keypad panel display goes off. To prevent this, the main circuit AC power must also be supplied as auxiliary control power to the auxiliary control power input terminals (R0 and T0).

1. To ensure effective noise reduction when using a radio noise filter, the output power from the filter must go to the auxiliary control power input terminals. If these terminals are connected to the input side of the filter, the noise reduction effect deteriorates.

(4) DC reactor terminals (P1 and P(+))

1. Before connecting a power factor correcting DC reactor (optional) to these terminals, remove the factory-installed jumper.
2. If a DC reactor is not used, do not remove the jumper.

Note: For drives of 100 Hp or more, the DC reactor is provided as a separate standard component and should always be connected to the terminals. DC reactor is provided as open type, enclosure to be provided by other.

> CAUTION
>
> A DC reactor does not come with drives rated less than 100 Hp, however, use a DC reactor or AC reactor under the following conditions otherwise the drive may be damaged or malfunction.

1) Used when the capacity of the power supply transformer exceeds 500k VA and exceeds the rated capacity of the drive tenfold.
2. Used when a thyrister converter is connected as a common load on the same transformer.
3. Used to prevent a drive OV trip from occuring when the power factor capacitor in the power line is switched on and off.
4. Used when the voltage imbalance exceds 3%.

$$\text{Imbalance rate between phase [\%]} = \frac{\text{(Max. voltage [V] - Min. voltage [V]}}{\text{3-phase average voltage [V]}} \times 100\%$$

(5) Terminals for external braking resistor (P(+) and DB) (15 Hp or less)

The GP10 drive 15 Hp or less, does not contain a braking resistor. To improve braking performance, an external braking resistor must be installed.

1. Connect terminals P(+) and DB on the external braking resistor to terminals P(+) and DB on the drive.
2. The wiring length (twisted pair cables, etc.) should not exceed 16.5 feet (5m).

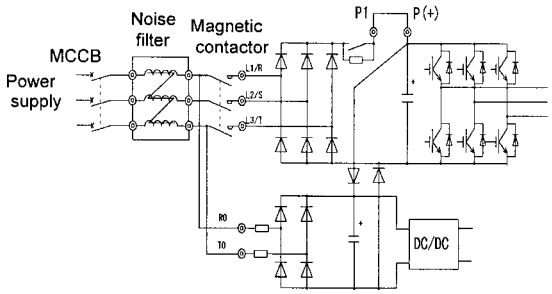

Fig. 2-3-2 Connection the auxiliary control-power input terminals

(6) Terminals for DC link circuit (P(+) and N(-))

The GP10 drive of 20 Hp or more, does not contain a drive circuit for the braking resistor. To improve braking performance, an external braking unit (option) and an external braking resistor (option) must be installed.

1. Connect terminals P(+) and N(-) on the braking unit to terminals P(+) and N(-) on the drive. The wiring length (twisted pair cables, etc.) should not exceed 16.5 feet (5m).
2. Connect terminals P(+) and DB on the braking resistor to terminals P(+) and DB on the braking unit. The wiring length (twisted pair cables, etc.) should not exceed 33 feet (10m). If terminals P(+) and N(-) on the drive are not used, leave the terminals open. If P(+) is connected to N(-), or the braking resistor is connected directly, the resistor will burn up.
3. Auxiliary contacts 1 and 2 of the braking unit have polarity.
4. Refer to DB unit instruction book for paralleled resistors.

Note: Braking units and resistors are rated on degree of braking, duration and system frequency of braking cycle. Verify units meet application requirements.

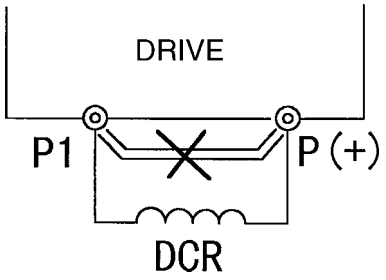

Fig. 2-3-3

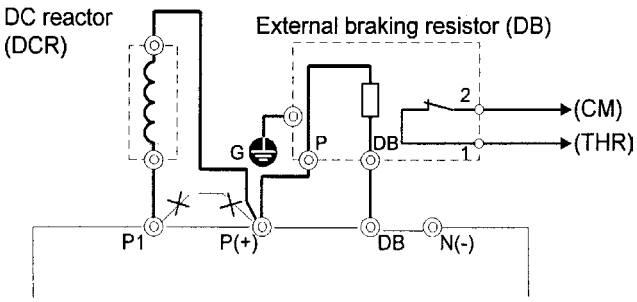

Fig. 2-3-4 Connection (15 Hp or less)

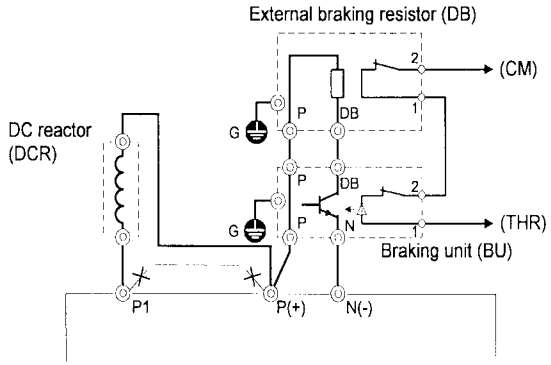

Fig. 2-3-5 Connection 20 Hp or more, 100 Hp or more parallel resistors, 200 Hp or more parallel braking units.

(7) Ground terminal

The grounding connector should be sized in accordance with the NEC or Canadian Electrical Code. The connection should be made by a UL listed or CSA certified closed-loop terminal connector sized for the wire gauge involved. The connector is to be fixed using the crimp tool specified by the connector manufacturer.

(8) Auxiliary power switching connector (CN UX) (for drives of 40 Hp or more)

When a drive of 40 Hp or more requires main circuit power voltage as listed in Table 2-3-3, disconnect the auxiliary power switching connector CN UX from U1 and connect to U2. For the switching method, see Fig. 2-3-7.

Table 2-3-3 Main Voltage Requiring Auxiliary Power Switching Connector

Frequency [Hz]	Power Voltage Range [VAC]
50	380 - 398
60	380 - 430

CAUTION

- Check that the number of phases and rated voltage match those of the AC power supply.
- Do not connect the AC power supply to the output terminals (U, V, W). Injury may result.
- Do not directly connect a braking resistor to the DC terminals (P[+] and N[-]). Fire may result.

The switching connectors are mounted on the power PCB above the control PCB as shown on the right.

Note: To remove a connector, unlock the connector (using the locking mechanism) and pull. To install, firmly push the connector until it clicks into place.

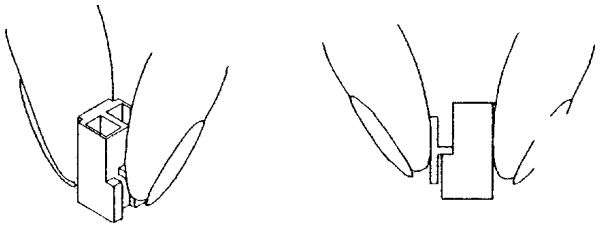

CN UX

<Enlarged view of part A>

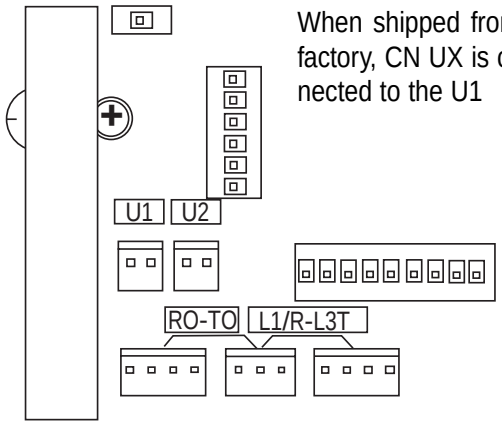

When shipped from the factory, CN UX is connected to the U1 side.

<3D view of part A>

Factory Shipment Status Connector CN UX: U1

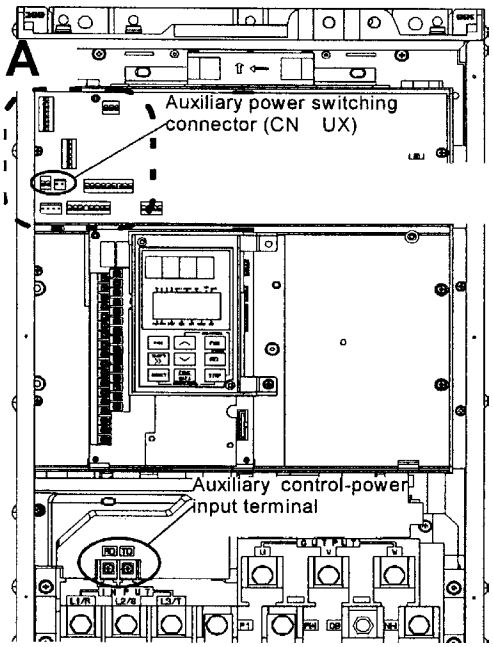

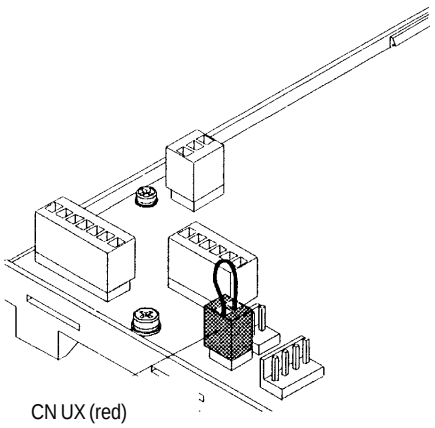

CN UX (red)

Connecting the Control Terminals

The table below lists the functions of the control circuit terminals. A control circuit terminal should be connected according to its function setting.

Classification	Terminal Symbol	Terminal Name	Function
Analog input	13	Potentiometer power supply	Used for +10V DC power supply for frequency setting POT (resistance of 1 to 5k Ohms)
	12	Voltage input	1. Frequency is set according to the analog input voltage supplied from an external circuit. - 0 to +10V DC / 0 to 100% - Reversible operation using positive and negative signals: 0 to +/- 10V DC / 0 to 100% - Reverse operation: +10 to 0V DC / 0 to 100% 2. Input feedback signal for PID control is input. 3. The analog input value from the external circuit is used for torque control * Input resistance: 22 k Ohms
	V2	Voltage input supplied from an external circuit.	¨ Frequency is set according to the analog input voltage - 0 to +10V DC/0 to 100% - Reverse operation: +10 to 0V DC/0 to 100% * Use only one terminal - V2 or C1 Exclusively * Input resistance: 22 k Ohms
	C1	Current input	1. Frequency is set according to the analog input current supplied from an external circuit. - 4 to 20mA DC / 0 to 100% - Reverse operation: 20 to 4mA DC / 0 to 100% 2. The feedback signal for PID control is input. 3. PTC thermistor input 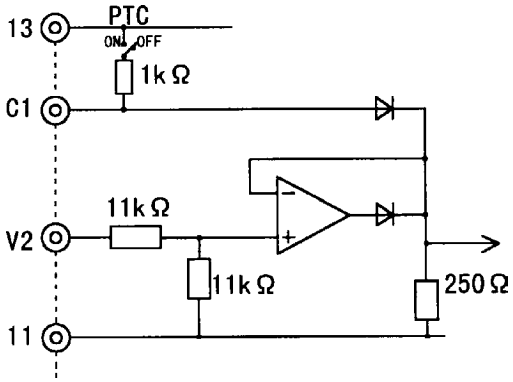 * Use only one terminal - V2 or C1 Exclusively * Input resistance: 250 Ohms * PTC switch is off when PTC function is not used
	11	Analog input common	Common terminal for analog input signals

<table>
<tr><td rowspan="12">Digital input</td><td>FWD</td><td>Forward operation / Stop command</td><td>Used for forward operation (when FWD-CM is on) or deceleration and stop (when FWD-CM is opened)</td></tr>
<tr><td>REV</td><td>Reverse operation / Stop command</td><td>Used for reverse operation (when REV-CM is on) or deceleration and stop (when REV-CM is opened)</td></tr>
<tr><td>X1</td><td>Digital input 1</td><td rowspan="10">The coast-to-stop command, external alarm, alarm reset, multi-step frequency selection, and other functions (from an external circuit) can be assigned to terminals X1 to X9. For details, see "Setting the Terminal Functions E01 to E09" in Section 5.2 Function Explanation.
<Specifications of digital input circuit>
<table><tr><td>Item</td><td></td><td>min.</td><td>typ.</td><td>max.</td></tr><tr><td>Operating voltage</td><td>ON</td><td>0V</td><td>–</td><td>2V</td></tr><tr><td></td><td>OFF</td><td>22V</td><td>24V</td><td>27V</td></tr><tr><td>Maximum load current</td><td>ON</td><td>–</td><td>3.2mA</td><td>4.5 mA</td></tr><tr><td>Leakage current</td><td>OFF</td><td>–</td><td>–</td><td>0.5 mA</td></tr></table>
 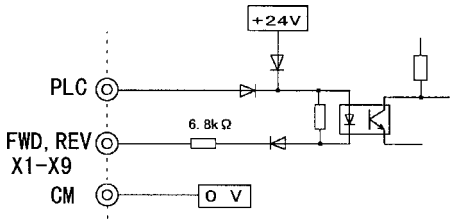 </td></tr>
<tr><td>X2</td><td>Digital input 2</td></tr>
<tr><td>X3</td><td>Digital input 3</td></tr>
<tr><td>X4</td><td>Digital input 4</td></tr>
<tr><td>X5</td><td>Digital input 5</td></tr>
<tr><td>X6</td><td>Digital input 6</td></tr>
<tr><td>X7</td><td>Digital input 7</td></tr>
<tr><td>X8</td><td>Digital input 8</td></tr>
<tr><td>X9</td><td>Digital input 9</td></tr>
<tr><td></td><td></td></tr>
<tr><td>P24</td><td>Control Unit power Supply</td><td>+24VDC power supply for control input. Maximum output current 100mA</td></tr>
<tr><td>PLC</td><td>PLC signal power</td><td>Used to connect PLC power supply for output signals; rated nominal voltage = 24 VDC (22 to 27 V DC range) at sink logic operation.</td></tr>
<tr><td>CM</td><td>Digital input common</td><td>Common terminal for digital input signals and P24</td></tr>
<tr><td>Analog output</td><td>FMA

(11: common terminal)</td><td>Analog monitor</td><td>Outputs monitor signal using analog DC voltage 0 to +10V DC.
The signal indicates one of the following:
- Output frequency (before slip compensation)
- Load factor
- Output frequency (after slip compensation)
- Power consumption
- Output current
- PID feedback value
- Output voltage
- PG feedback value
- Output torque
- DC link circuit voltage
* Connectable impedance: min. 5k ohms</td></tr>
<tr><td>Pulse output</td><td>FMP
(CM: common terminal)</td><td>Frequency monitor
(pulse waveform output)</td><td>Outputs a monitor signal using the pulse waveform.
This signal has the same function as the FMA signal.</td></tr>
</table>

<table>
<tr><td rowspan="5">Transistor</td><td>Y1</td><td>Transistor output 1</td><td rowspan="5">A running signal, frequency equivalence signal, overload early warning output signal, and other signals from the drive are output (as transistor output) to arbitrary ports. For details, see "Setting the Terminal Functions E20 to E23" in Section 5.2 Function Explanation.
* <Specifications of transistor output circuit>
<table><tr><td>Item</td><td></td><td>min.</td><td>typ.</td><td>max.</td></tr><tr><td>Operating voltage</td><td>ON</td><td>–</td><td>1V</td><td>2V</td></tr><tr><td></td><td>OFF</td><td>–</td><td>24V</td><td>27V</td></tr><tr><td>Maximum load current</td><td>ON</td><td>–</td><td>–</td><td>50 mA</td></tr><tr><td>Leakage current</td><td>OFF</td><td>–</td><td>–</td><td>0.1 mA</td></tr></table>
 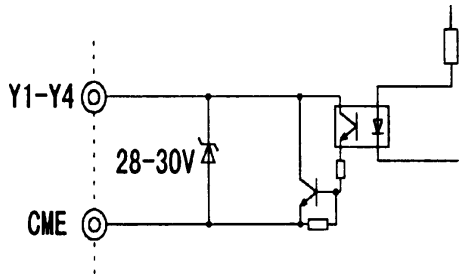 </td></tr>
<tr><td>Y2</td><td>Transistor output 2</td></tr>
<tr><td>Y3</td><td>Transistor output 3</td></tr>
<tr><td>Y4</td><td>Transistor output 4</td></tr>
<tr><td></td><td></td></tr>
<tr><td></td><td>CME</td><td>Transistor output common</td><td>Common terminal for transistor output signals. This terminal is insulated from terminals (CM) and [11].</td></tr>
<tr><td>Relay output</td><td>30A,30B,30C</td><td>Alarm outputs for any fault.</td><td>If the drive is stopped by an alarm (protective function), the alarm signal is output from the relay contact output terminal (1SPDT). Contact rating: 250 VAC, 0.3A,cosØ = 0.3, 48 VDC, 0.5A for CE Marking
An excitation mode (excitation at alarm occurrence or at normal operation) can be selected.</td></tr>
<tr><td></td><td>Y5A,Y5C</td><td>Multi-purpose signal</td><td>These signals can be output similar to the Y1 to Y4 signals above. The contact rating is the same as that of the alarm output above.</td></tr>
<tr><td>Communic-ation</td><td>DX+,DX–</td><td>RTU communication</td><td>Input / output signal terminals for RTU communication input / output Up to 31 inverters can be connected using the daisy chain method.</td></tr>
<tr><td></td><td>SD</td><td>Communication cable shield connection terminal</td><td>Terminal for connecting the cable shield. The terminal is electrically floating.-</td></tr>
</table>

(1) Analog input terminals (13, 12, C1, and 11)

1. These terminals receive low level analog signals that may be affected by external noise. The cables must be as short as possible (20 meters or less), must be shielded, and the shields must be grounded. If the cables are affected by external induction noise, the shielding effect may be improved by connecting the shield to terminal [11].

2. If contacts must be connected to these circuits, twin (bifurcated) contacts for handling low level signals must be used. A contact must not be connected to terminal [11].

3. If an external analog signal output device is connected to these terminals, it may malfunction as a result of drive noise. To prevent malfunction, connect a ferrite core or capacitor to the external analog signal output device.

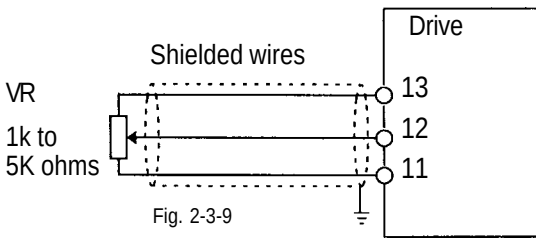

Fig. 2-3-9

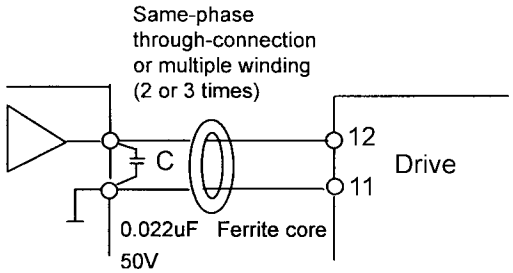

Fig. 2-3-10 Example of Noise Prevention

(2) Digital input terminals (FWD, REV, X1 to X9, PLC, and CM)

1. Digital input terminals (e.g., FWD, REV, X1 to X9) are generally turned on or off by connecting or disconnecting the line to or from the CM terminal.

   If digital input terminals are turned on or off by switching the PLC's open collector output using an external power supply, a resulting bypass circuit may cause the drive to malfunction. To prevent a malfunction, connect the PLC terminal as shown in Fig. 2-3-11.

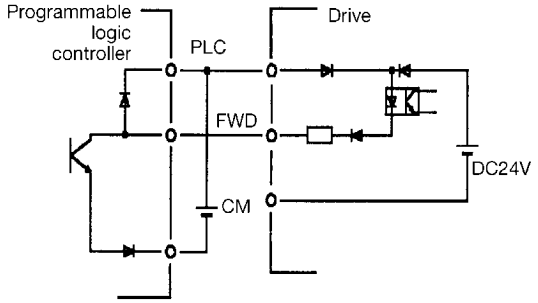

Fig. 2-3-11 Prevention of Bypass Current by External Power

2. When using a contact input, a high-quality relay with reliable contacts must be used.

(3) Transistor output terminals (Y1 to Y4, CME)

1. These terminals have a circuit configuration as shown in Table 2-3-3, "Transistor Output". Confirm the polarity of the external power supply.
2. To connect a control relay, connect a surge absorbing diode to both ends of its exciting coil.

(4) Sink or Source Logic Selection.

1. Set SWI for Sink or Source Connection to the PLC. The factory default setting is Sink and this instruction manual explains Sink logic function only.
2. When you need to connect source type logic, refer to Basic Connection Diagram Fig. 2-3-3 and Fig. 2-3-4 and Technical Information Manual. (Sink Logic is commonly used in the USA and Source Logic is commonly used in Europe.)

(5) Others

1. To prevent a malfunction as a result of noise, control terminal cables must be placed as far as possible from the main circuit cables.
2. The control cables inside the inverter must be secured to prevent direct contact with the main circuit (e.g., main circuit terminal block).

WARNING

Control lines generally do not have enhanced insulation. If the insulation of a control line is damaged, the control signals may be exposed to high voltage in the main circuit. The Low Voltage Directive in Europe also restricts the exposure to high voltage. Electric shock may result

CAUTION

The inverter, motor, and cables generate noise. Check that the ambient sensors and devices do not malfunction. Accident may result.

(6) Wiring of control circuit (inverter of 40 Hp or more)

1. Pull out the control circuit wiring along the left panel as shown in Fig. 2-3-12.
2. Secure the cable to cable binding hole A (on the left wall of the main circuit terminal block) using a cable-tie
   (e.g., Insulock). The cable-tie must not exceed 0.14" (3.5mm) in width and 0.06" (1.5mm) in thickness.
3. When the optional PC board is mounted, the signal lines must be secured to cable binding hole B.

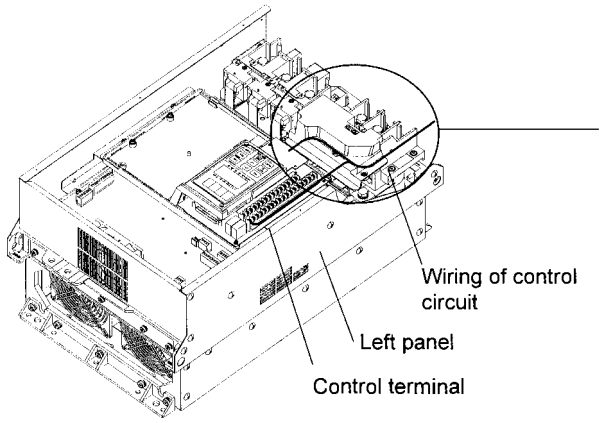

Fig. 2-3-12 The Control Wiring Route

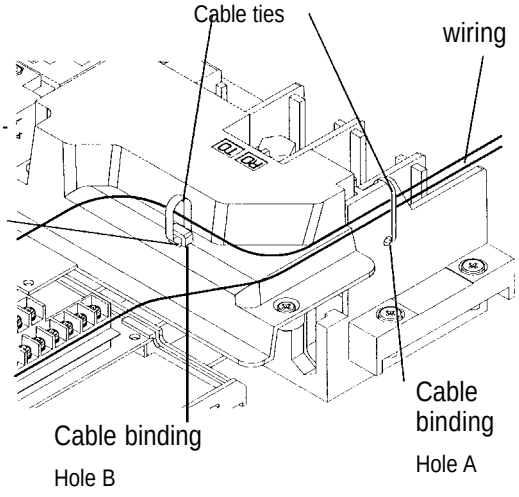

Fig. 2-3-13 Securing Positions for Inverter Control Circuit Wiring (40 HP or more)

Terminal Configuration

1. Main circuit terminals

1/4 to 1 Hp 230 VAC
1/2 to 1 Hp 460 VAC

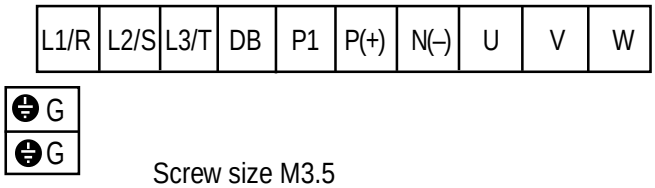

Screw size M3.5

60 To 100 Hp 230 VAC
125 to 200 Hp 460 VAC

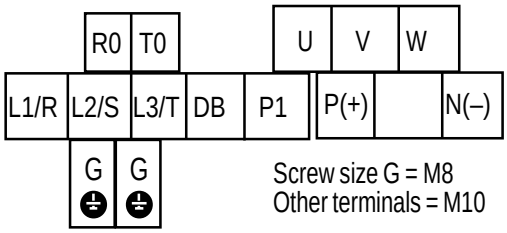

Screw size G = M8
Other terminals = M10

2 to 5 Hp 230 VAC
2 to 5 Hp 460 VAC

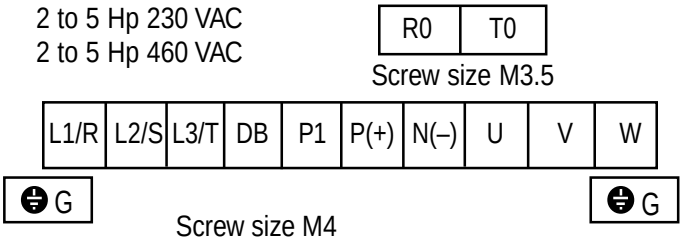

Screw size M3.5
Screw size M4

125 Hp 230 VAC

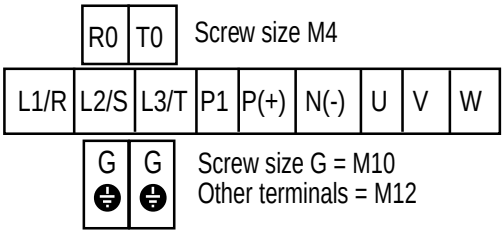

Screw size M4
Screw size G = M10
Other terminals = M12

7.5 to 15 Hp 230 VAC
7.5 to 15 Hp 460 VAC

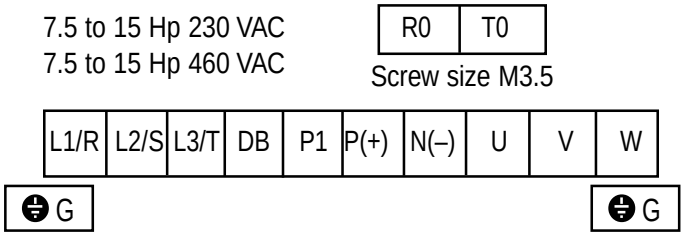

Screw size M3.5
Screw size M5

150 Hp 230 VAC
250 to 450 Hp 460 VAC

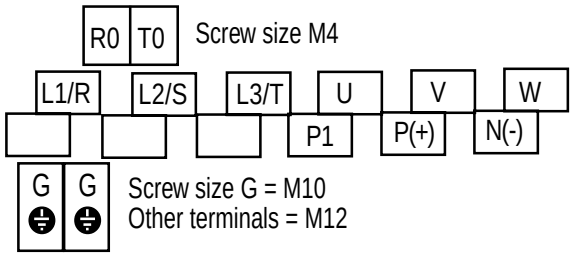

Screw size M4
Screw size G = M10
Other terminals = M12

20 to 30 Hp 230 VAC
20 to 30 Hp 460 VAC

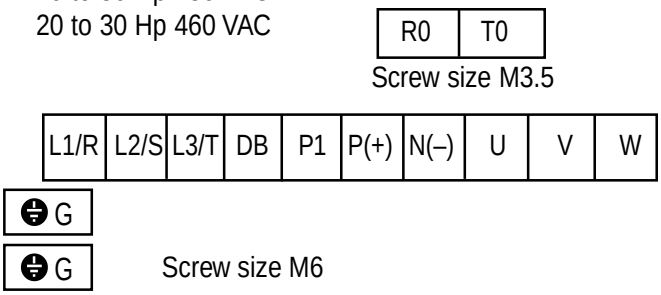

Screw size M3.5
Screw size M6

500, 600 Hp 460 VAC

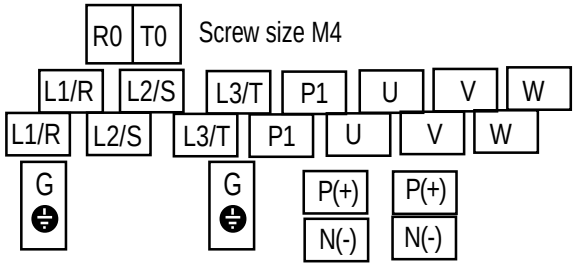

Screw size M4
Screw size G = M10
Other terminals = M12

40 to 50 Hp 230 VAC
40 to 100 Hp 460 VAC
Screw size M4

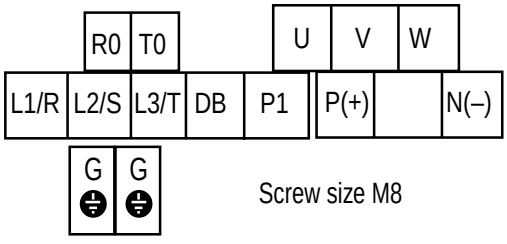

Screw size M8

700, 800 Hp 460 VAC

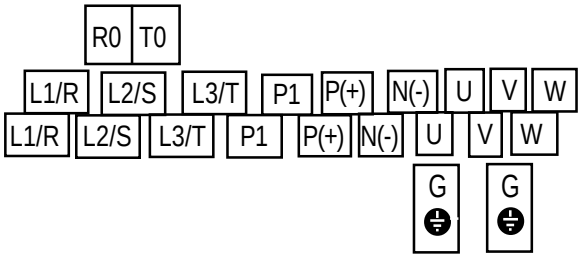

Screw size RO,TO = M4 G = M10
Other terminals = M12

2. Control circuit terminals

	30A	Y5A	CMY	Y3	Y1	C1	FMA	FMP	PLC	X1	X2	X3	X4	X5	X6	X7	X8	X9
30C	30B	Y5C	Y4	Y2	11	12	13	V2	CM	CM	FWD	REV	P24	P24	DX-	DX+	SD	

GP10 Drive Cable Size, Tightening Torque and Circuit Protection Rating

2-3-5 GP10-Variable Torque, Constant Torque Drive Cable Size, Tightening Torque and Circuit Protection Rating

	Incoming Device				Tightening Torque lb-Inch (Nm)					Cable size AWG				
	Input Fuse													
HP	L1/R, L2/S, L3/T (Nominal)	L1/R, L2/S, L3/T (Maximum) (*1)	Auxiliary Input R0, T0	Input Circuit Breaker (*1)	L1/R, L2/S, L3/T, U, V, W, P1, P(+)	E(G)	DB circuit (*2) P(+), N(-), DB	R0, T0	Control	L1/R, L2/S, L3/T	U, V, W	DC Reactor P1, P(+)	DB circuit (*2) P(+), N(-), DB	R0, T0
230VAC Input														
0.25/0.25	3	3	3	15	10.6 (1.2)		10.6	-	6.2 (0.7)				16	-
0.5/0.5	5	6	3	15			(1.2)	-			16			-
1/1	10	15	3	20				-						-
2/2	15	20	3	30	20.8 (2.36)		20.8	10.6 (1.2)						14
3/3	20	30	3	40			(2.36)				14		14	
5/5	35	50	3	60							10			
7.5/5	60	80	3	100	31.0 (3.5)		31.0				8			
10/9.5	70	125	3	125			(3.5)				6			
15/10	100	150	3	175	51.3 (5.8)						4			
20/15	125	200	3	225							3			
25/20	150	225	3	250							2			
30/25	175	250	3	300							1			
40/30	200	-	5	200						4/0	1/0	2/0		10
50/40	225	-	5	225	119(13.5)									
60/50	300	-	5	300	239(27)	119(13.5)	119			Qty2 - 1	3/0	4/0	10	
75/60	350	-	5	350			(13.5)			Qty2 - 2/0	4/0	Qty2 - 1		
100/75	300	-	5	300						Qty2 - 3/0	Qty2 - 1/0	Qty2 - 2/0	8	
125/100	400	-	5	400	425(48)	239(27)				Qty 2 - 2/0	Qty2 - 3/0	Qty2 - 4/0	6	
150/125	450	-	5	450						Qty2 - 4/0	Qty2 - 4/0	Qty2 - 250	4	
460VAC Input														
0.5/0.5	3	3	3	15	10.6 (1.2)		10.6	-	6.2 (0.7)				16	-
1/1	5	6	3	15			(1.2)	-			16			-
2/2	10	10	3	15	20.8 (2.36)		20.8	10.6 (1.2)						14
3/3	15	15	3	20			(2.36)							
5/5	20	25	3	35							14		14	
7.5/5	30	45	3	50	31.0 (3.5)		31.0				12			
10/7.5	40	60	3	70			(3.5)				10			
15/10	50	90	3	90	51.3 (5.8)									
20/15	70	110	3	110							8			
25/20	80	125	3	150							6			
30/25	100	125	3	175							4			
40/30	100	-	10	100	119(13.5)					2	3	3		10
50/40	125	-	10	125						1	2	2		
60/50	175	-	10	175			51.3			2/0	2	1		
75/60	150	-	10	150			(5.8)			3/0	1/0	2/0		
100/75	175	-	10	175	239(27)	119(13.5)				2/0	3/0	4/0		
125/100	200	-	10	200		239(27)				3/0	4/0	Qty2 - 1	10	
150/125	225	-	10	225			119			Qty2 - 1/0	Qty2 - 1/0	Qty2 - 1/0	8	
200/150	300	-	10	300			(13.5)			Qty2 - 1/0	Qty2 - 2/0	Qty2 - 3/0		
250/200	400	-	10	400	425(48)		239			Qty2 - 3/0	Qty2 - 3/0	Qty2 - 4/0	6	
300/250	450	-	10	450			(27)			Qty2 - 4/0	Qty2 - 250	Qty2 - 300	4	
350/300	500	-	10	500						Qty2 - 250	Qty2 - 300	Qty2 - 350		
400/350	600	-	10	600			(*3)			Qty2 - 350	Qty2 - 400	Qty2 - 500	(*3)	
450/350	700	-	10	700						Qty2 - 500	Qty2 - 500	Qty2 - 700		
500/400	700	-	10	700						Qty2 - 350	Qty2 - 400	Qty2 - 500		
600/450	1000	-	10	1000						Qty2 - 500	Qty2 - 500	Qty2 - 70		
700/500	1000	-	10	1000						Qty2 - 600	Qty2 - 600	Qty2 - 80		
800/600	1200	-	10	1200						Qty2 - 700	Qty2 - 750	Qty2 - 1000		

(*1)Class J Fuse or Circuit Breaker reted 600V with the maximum current rating as shown in the above table shall be connected to the drive for 30HP and less.
(*2)Based on GE Fuji standard DB unit and DB resistor designs. Other rating require careful review.
(*3) Consult factory
Device ratings such as system coordination, short-circuit rating and type must be carefully reviewed by the user.
Wire size from NEC tables 310-16. Copper wire rated 60 Deg. C for 100amps or less, 75 Deg. C for over 100 amps in 30 Deg. C ambient and 1.25 times Drive rated amps.

DC Link Reactor

Dimensions in inches

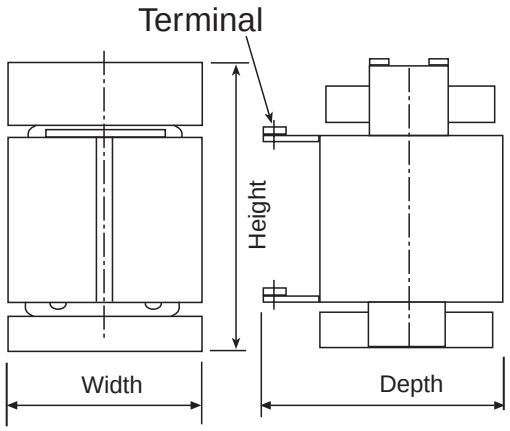

Hp	Model No.	Width	Depth	Height	Weight	Loss [W]
230V GP10-Variable Torque/Constant Torque						
100/75	DCR2-75B	7.87	10.63	7.09	37	55
125/100	DCR2-90B	7.09	11.02	8.46	37	57
150/125	DCR2-110B	7.48	12.99	9.05	46	67
460V GP10-Variable Torque/Constant Torque						
100/75	DCR4-75B	7.48	10.63	6.89	35	58
125/100	DCR4-90B	7.48	11.02	7.87	44	64
150/125	DCR4-110B	7.48	11.02	7.87	46	73
200/150	DCR4-132B	7.87	11.02	8.07	55	84
250/200	DCR4-160B	8.27	12.6	8.07	68	90
300/250	DCR4-200B	8.27	12.99	9.06	75	126
350/300	DCR4-220B	8.66	13.78	9.06	81	131
400/350	DCR4-280B	8.66	14.57	9.65	95	133
450/350	DCR4-280B	8.66	14.57	9.65	95	150
500/400	DCR4-355B	9.84	12.99	8.78	99	205
600/450	DCR4-400B	9.84	13.78	9.17	106	215
700/500	DCR4-450B	10.63	13.78	10.35	121	272
800/600	DCR4-500B	11.1	14.17	10.35	143	292

Note:

- GP10 Drives rated 100 Hp and above are furnished with a DC link reactor. This reactor must be installed between terminal P1 and P+ prior to commissioning of the Drive.
- The weight of the DC Link Reactor is not included with that of the Drive.
- DC Link Reactor is provided as open type and is separately mounted. Enclosure to be provided by others.

Function Selection

Function Selection List

F: Fundamental Functions

Pg.	Func. No.	Name	LCD Display	Setting Range	Unit	Min.	Factory Setting 30 HP	Factory Setting 40 HP	Data Formst	Change during op
	F00	Data protection	F00 DATA PRTC	0, 1	-	-	0		1	N
5-7	F01	Frequency command 1	F01 FREQ CMD 1	0 to 11	-	-	0		1	N
	F02	Operation method	F02 OPR METHOD	0 to 4	-	-	0		1	N
	F03	Maximum frequency 1	F03 MAX Hz-1	50 to 120Hz	Hz	1	60		1	N
	F04	Base frequency 1	F04 BASE Hz-1	25 to 120Hz	Hz	1	60		1	N
5-10	F05	Rated voltage 1 (at Base frequency 1)	F05 RATED V-1	0V: (Output voltage proportional to source voltage) 230V class: 80 to 240V 460V class: 320 to 480V	V	1	230: (230V class) 460: (460V class)		1	N
	F06	Maximum voltage 1 (at Maximum frequency 1)	F06 MAX V-1	230V class: 80 to 240V 460V class: 320 to 480V	V	1	230: (230V class) 460: (460V class)		1	N
	F07	Acceleration time 1	F07 ACC TIME1	0.01 to 3600 s	s	0.01	6.0	20.0	12	Y
	F08	Deceleration time 1	F08 DEC TIME1							
	F09	Torque boost 1	F09 TRQ BOOST1	0.0, 0.1 to 20.0	-	0.1	2.0		12	Y
	F10	Electronic (Select)	F10 ELCTRN OL1	0, 1, 2	-	-	1		3	Y
	F11	Thermal 1 (level)	F11 OL LEVEL1	20 to 135% of drive rated current	A	0.01	Motor rated current		1	Y
5-11	F12	(time constant)	F12 TIME CNST1	0.5 to 75.0 min	min	0.1	5.0	10.0	19	Y
	F13	Electronic thermal overload relay (for braking resistor)	F13 DBR OL	[Up to 15 HP] 0, 1, 2	-	-	1		3	Y
				[20 HP and above] 0			0			
5-12	F14	Restart mode after momentary power failure	F14 RESTART	0 to 5	-	-	0		1	N
	F15	Frequency (high)	F15 H LIMITER	0 to 120 Hz	Hz	1	70		1	Y
	F16	Limiter (low)	F16 L LIMITER				0		1	N
	F17	Gain (for frequency set signal)	F17 FREQ GAIN	0.0 to 200.0%	%	0.1	100.0		1	Y
5-14	F18	Bias frequency	F18 FREQ BIAS	-120.0 to +120.0 Hz	Hz	0.1	0.0		1	Y
	F20	DC brake (starting frequency)	F20 DC BRK Hz	0.0 to 60.0 Hz	Hz	0.1	0.0		3	Y
	F21	(braking level)	F21 DC BRK LVL	0 to 80%	%	1	0		1	
	F22	(braking time)	F22 DC BRK t	0.0s (inactive)	s	0.1	0.0		3	
	F23	Starting frequency	F23 START Hz	0.1 to 60.0 Hz	Hz	0.1	0.5		3	N
	F24	(holding time)	F24 HOLDING t	0.0 to 10.0 s	s	0.1	0.0		3	
	F25	Stop frequency	F25 STOP Hz	0.1 to 6.0 Hz	Hz	0.1	0.2		1	
5-15	F26	Motor sound (carrier freq.)	F26 MTR SOUND	0.75 to 15 kHz (6kHz)	kHz	1	2		1	Y
	F27	(sound tone)	F27 SOUND TONE	0 to 3	-	-	0		1	Y
	F30	FMA (voltage adjust)	F30 FMA V-ADJ	0 to 200%	%	1	100		1	Y
	F31	(function)	F31 FMA FUNC	0 to 10	-	-	0		1	Y
	F33	FMP (pulse rate)	F33 FMP PULSES	300 to 6000 p/s (full scale)	p/s	1	1440		1	Y
	F34	(voltage adjust)	F34 FMP V-ADJ	0%, 1 to 200%	%	1	0		1	Y
5-16	F35	(function)	F35 FMP FUNC	0 to 10	-	-	0		1	Y
	F36	30RY operation mode	F36 30RY MODE	0, 1	-	-	0		1	Y
	F40	Torque limiter1 (driving)	F40 DRV TRQ 1	20 to 150%, 999	%	1	999		1	Y
	F41	(braking)	F41 BRK TRQ 1	0%, 20 to 150%, 999			999		1	
5-17	F42	Torque vector control 1	F42 TRQVECTOR1	0, 1	-	-	0		1	N

E: Terminal Extensions Functions

Pg.	Func. No.	Name	LCD Display	Setting Range	Unit	Min.	Factory Setting 30 HP	Factory Setting 40 HP	Data Format	Change During op
5-18/21	E01	X1 terminal function	E01 X1 FUNC	0 to 32	-	-	0		1	N
	E02	X2 terminal function	E02 X2 FUNC				1		1	N
	E03	X3 terminal function	E03 X3 FUNC				2		1	N
	E04	X4 terminal function	E04 X4 FUNC				3		1	N
	E05	X5 terminal function	E05 X5 FUNC				4		1	N
	E06	X6 terminal function	E06 X6 FUNC				5		1	N
	E07	X7 terminal function	E07 X7 FUNC				6		1	N
	E08	X8 terminal function	E08 X8 FUNC				7		1	N
	E09	X9 terminal function	E09 X9 FUNC				8		1	N
5-22	E10	Acceleration time 2	E10 ACC TIME2	0.01 to 3600 s	s	0.01	6.00	20.00	12	Y
	E11	Deceleration time 2	E11 DEC TIME2				6.00	20.00	12	Y
	E12	Acceleration time 3	E12 ACC TIME3				6.00	20.00	12	Y
	E13	Deceleration time 3	E13 DEC TIME3				6.00	20.00	12	Y
	E14	Acceleration time 4	E14 ACC TIME4				6.00	20.00	12	Y
	E15	Deceleration time 4	E15 DEC TIME4				6.00	20.00	12	Y
	E16	Torque limiter 2 (driving)	E16 DRV TRQ 2	20 to 150%, 999	%	1	999		1	Y
	E17	(braking)	E17 BRK TRQ 2	0%, 20 to 150%, 999	%	1	999		1	Y
5-22/24	E20	Y1 terminal function	E20 Y1 FUNC	0 to 33	-	-	0		1	N
	E21	Y2 terminal function	E21 Y2 FUNC				1		1	N
	E22	Y3 terminal function	E22 Y3 FUNC				2		1	N
	E23	Y4 terminal function	E23 Y4 FUNC				7		1	N
	E24	Y5A, Y5C terminal function	E24 Y5 FUNC				10		1	N
5-24	E25	Y5 RY operation mode	E25 Y5RY MODE	0,1	-	1	0		1	N
5-25	E30	FAR function (Hysteresis)	E30 FAR HYSTR	0.0 to 10.0 Hz	Hz	0.1	2.5		3	Y
	E31	FDT function (level)	E31 FDT1 LEVEL	0 to120 Hz	Hz	1	60		1	Y
	E32	signal (Hysteresis)	E32 FDT1 HYSTR	0.0 to 30.0 Hz	Hz	0.1	1.0		3	
	E33	OL function (mode select)	E33 OL1 WARNING	0: Thermal calculation 1: Output current	-	-	0		1	Y
	E34	signal (l (level)	E34 OL1 LEVEL	5 to 150% of rated drive current	A	0.01	motor rated current		19	
	E35	(timer)	E35 OL1 TIMER	0.1 to 60.0 s	s	0.1	10.0		3	
	E36	FDT2 function (level)	E36 FDT2 LEVEL	0 to 120 Hz	Hz	1	60		1	Y
	E37	OL2 function (level)	E37 OL2 LEVEL	5 to 150% of rated drive current	A	0.01	motor rated current		19	
5-26	E40	Display coefficient A	E40 COEF A	-999.00 to 999.00	-	0.01	0.01		12	
	E41	Display coefficient B	E41 COEF B	-999.00 to 999.00	-	0.01	0.00		12	Y
	E42	LED Display filter	E42 DISPLAY FL	0.0 to 5.0 s	s	0.1	0.5		3	Y
	E43	LED Monitor (function)	E43 LED MNTR	0 to 12	-	-	0		1	Y
	E44	(display in STOP mode)	E44 LED MNTR2	0, 1	-	-	0		1	Y
5-27	E45	LCD Monitor (function)	E45 LCD MNTR	0, 1	-	-	0		1	Y
	E46	(language)	E46 LANGUAGE	0 to 5	-	-	1		1	Y
	E47	(contrast)	E47 CONTRAST	0(soft) to 10(hard)	-	-	5		1	Y

C:Frequency Control Functions

5-28	C01	Jump (Jump freq. 1)	C01 JUMP Hz 1	0 to 120 Hz	Hz	1	0		1	Y
	C02	frequency (Jump freq. 2)	C02 JUMP Hz 2				0		1	
	C03	(Jump freq. 3)	C03 JUMP Hz 3				0		1	
	C04	(Hysteresis)	C04 JUMP HYSTR	0 to 30 Hz	Hz	1	3		1	
	C05	Multistep (Freq. 1)	C05 MULTI Hz-1	0.00 to 120.00 Hz	Hz	0.01	0.00		5	Y
	C06	frequency (Freq. 2)	C06 MULTI Hz-2				0.00		5	
	C07	setting (Freq. 3)	C07 MULTI Hz-3				0.00		5	
	C08	(Freq. 4)	C08 MULTI Hz-4				0.00		5	
	C09	(Freq. 5)	C09 MULTI Hz-5				0.00		5	
	C10	(Freq. 6)	C10 MULTI Hz-6				0.00		5	
	C11	(Freq. 7)	C11 MULTI Hz-7				0.00		5	
	C12	(Freq. 8)	C12 MULTI Hz-8				0.00		5	
	C13	(Freq. 9)	C13 MULTI Hz-9				0.00		5	
	C14	(Freq. 10)	C14 MULTI Hz-10				0.00		5	
	C15	(Freq. 11)	C15 MULTI Hz-11				0.00		5	
	C16	(Freq. 12)	C16 MULTI Hz-12				0.00		5	
	C17	(Freq. 13)	C17 MULTI Hz-13				0.00		5	
	C18	(Freq. 14)	C18 MULTI Hz-14				0.00		5	
	C19	(Freq. 15)	C19 MULTI Hz-15				0.00		5	

Pg.	Func. No.	Name	LCD Display		Setting Range	Unit	Min.	Factory Setting 30 HP	Factory Setting 40 HP	Data Format	Change during op
	C20	JOG frequency	C20	JOG Hz	0.00 to 120.00 Hz	Hz	0.01	5.00		5	Y
5-29	C21	PATTERN (mode select) operation	C21	PATTERN	0,1,2	-	-	0		1	N
	C22	(Stage 1)	C22	STAGE 1	Operation time: 0.00 to 6000 s	s	0.01	0.00 F1		13	
	C23	(Stage 2)	C23	STAGE 2	F1 to F4 and R1 to R4			0.00 F1		13	
	C24	(Stage 3)	C24	STAGE 3				0.00 F1		13	
5-29/30	C25	(Stage 4)	C25	STAGE 4				0.00 F1		13	Y
	C26	(Stage 5)	C26	STAGE 5				0.00 F1		13	
	C27	(Stage 6)	C27	STAGE 6				0.00 F1		13	
	C28	(Stage 7)	C28	STAGE 7				0.00 F1		13	
	C30	Frequency command 2	C30	FREQ CMD 2	0 to 11	-	-	2		1	N
5-30	C31	Offset adjust (terminal [12])	C31	BIAS 12	-100.0 to +100.0%	%	0.1	0.0		4	Y
	C32	(terminal [C1])	C32	GAIN 12	0.0 to +200.0%	%	0.1	100.0		3	Y
5-31	C33	Analog setting signal filter	C33	REF FILTER	0.00 to 5.00s	s	0.01	0.05		5	Y
P:Motor Parameters											
	P01	Number of motor 1 poles	P01	M1 POLES	2 to 14	-	2	4		9	N
5-32	P02	Motor 1 (capacity)	P02	M1-CAP	Up to 30 HP: 0.01 to 60 HP 40 HP and above: 0.01 to 600 HP	Hp	0.01	motor capacity		5	N
	P03	(rated current)	P03	M1-Ir	0.00 to 2000 A	A	0.01	motor rated current		19	N
	P04	(tuning)	P04	M1 TUN1	0, 1, 2	-	-	0		21	N
	P05	(on-line tuning)	P05	M1 TUN2	0, 1	-	-	0		1	N
	P06	(no-load current)	P06	M1-Io	0.00 to 2000 A	A	0.01	standard rated value		19	N
5-33	P07	(%R1 setting)	P07	M1-%R1	0.00 to 50.00%	%	0.01	standard rated value		5	Y
	P08	(%X setting)	P08	M1-%X	0.00 to 50.00%	%	0.01	standard rated value		5	Y
	P09	Slip compensation control	P09	SLIP COMP1	0.00 to 15.00 Hz	Hz	0.01	0.00		5	Y
H:High Performance Functions											
	H03	Data initializing	H03	DATA INIT	0, 1	-	-	0		1	N
	H04	Auto-reset (times)	H04	AUTO-RESET	0, 1 to 10 times	-	1	0		1	Y
5-34	H05	(reset interval)	H05	RESET INT	2 to 20 s	s	1	5		1	Y
	H06	Fan stop operation	H06	FAN STOP	0, 1	-	-	0		1	Y
	H07	ACC/DEC pattern (mode select)	H07	ACC PTN	0,1,2,3	-	-	0		1	N
5-35	H08	Rev. phase sequence lock	H08	REV LOCK	0, 1	-	-	0		1	N
	H09	Start mode	H09	START MODE	0, 1, 2	-	--	0		1	N
	H10	Energy-saving operation	H10	ENERGY SAV	0, 1	-	-	1		1	Y
	H11	DEC mode	H11	DEC MODE	0, 1	-	-	0		1	Y
	H12	Instantaneous OC limiting	H12	INST CL	0, 1	-	-	1		1	N
5-36	H13	Auto-restart (restart time)	H13	RESTART t	0.1 to 10.0 s	s	0.1	0.1	0.5	3	N
	H14	(freq. fall rate)	H14	FALL RATE	0.00 to 100.00 Hz/s	Hz/s	0.01	10.00		5	
	H15	(holding DC voltage)	H15	HOLD V	3-phase, 230V class: 200 to 300V 3-phase, 460V class: 400 to 600V	V	1	200V class: 235V 400V class: 470V		1	Y
	H16	(OPR command self hold time)	H16	SELFHOLD t	0.0 to 30.0 s, 999	s	0.1	999		3	N
5-37	H19	Active drive	H19	AUT RED	0, 1	-	-	0		1	Y
	H20	PID control (mode select)	H20	PID MODE	0, 1, 2	--	-	0		1	N
5-38	H21	(feedback signal)	H21	FB SIGNAL	0, 1, 2, 3	-	-	1		1	N
	H22	(P-gain)	H22	P-GAIN	0.01 to 10.00 times	-	0.01	0.1		5	Y
5-39/40	H23	(I-gain)	H23	I-GAIN	0.0, 0.1 to 3600 s	s	0.1	0.0		3	Y
	H24	(D-gain)	H24	D-GAIN	0.00 s , 0.01 to 10.0 s	s	0.01	0.00		5	Y
	H25	(feedback filter)	H25	FB FILTER	0.0 to 60.0 s	s	0.1	0.5		3	Y
5-41	H26	PTC thermistor (mode select)	H26	PTC MODE	0, 1			0		1	Y
	H27	(level)	H27	PTC LEVEL	0.00 to 5.00V	V	0.01	1.60		5	Y
	H30	Serial link (function select)	H30	LINK FUNC	0, 1, 2, 3	-	-	0		1	Y
	H31	Modbus-RTU (address)	H31	ADDRESS	0 (broadcast), 1 to 247	-	1	1		1	N
	H32	(mode select on no response error)	H32	MODE ON ER	0, 1, 2, 3	-	-	0		1	Y
5-42	H33	(timer)	H33	TIMER	0.0 to 60.0 s	s	-	2.0		3	Y
	H34	(baud rate)	H34	BAUD RATE	0, 1, 2, 3	-	-	1		1	Y
	H35	(data length)	H35	LENGTH	0 (8-bit fixed)	-	-	0		1	Y
	H36	(parity check)	H36	PARITY	0, 1, 2	-	-	0		1	Y
	H37	(stop bits)	H37	STOP BITS	0 (2-bit), 1(1-bit)	-	-	0		1	Y
5-43	H38	(no response error detection time)	H38	NO RES t	0 (no detection), 1 to 60 s	s	1	0		1	Y
	H39	(response interval)	H39	INTERVAL	0.00 to 1.00 s	s	0.01	0.01		5	Y

A: Alternative Motor Parameters

Pg.	Func. No.	Name	LCD Display		Setting Range	Unit	Factory Setting Min.	Factory Setting 30 HP	Factory Setting 40 HP	Data Format	Change During op
5-44	A01	Maximum frequency 2	A01	MAX Hz-2	50 to 120 Hz	Hz	1	60		1	N
	A02	Base frequency 2	A02	BASE Hz-2	25 to 120 Hz	Hz	1	60		1	N
	A03	Rated voltage 2 (at Base frequency 2)	A03	RATED V-2	0 230V class: 80 to 240V 460V class: 320 to 480V	V	1	230V class: 230 460V class: 460		1	N
	A04	Maximum voltage 2	A04	MAX V-2	230V class: 80 to 240V 460V class: 320 to 480V	V	1	230V class: 230 460V class: 460		1	N
	A05	Torque boost 2	A05	TRQ BOOST2	0.0, 0.1 to 20.0	-	-	2.0		3	Y
	A06	Electronic (select)	A06	ELCTRN OL2	0, 1, 2	-	-	1		1	Y
	A07	thermal 2 (level)	A07	OL LEVEL2	20% to 135% if INV rated current	A	0.01	motor rated current		19	Y
	A08	(thermal time constant)	A08	TIME CNST2	0.5 to 75.0 min	min	0.1	5.0	10.0	3	Y
	A09	Torque vector control 2	A09	TRQVECTOR2	0, 1	-	-	0		1	N
	A10	Number of motor 2 poles	A10	M2 POLES	2 to 14 poles	pole	2	4		9	N
	A11	Motor 2 (capacity)	A11	M2-CAP	Up to 30 HP: 0.01 to 60 HP 40 HP and above: 0.01 to 600 HP	HP	0.01	motor capacity		5	N
	A12	(rated current)	A12	M2-Ir	0.00 to 2000 A	A	0.01	motor rated current		19	N
5-45	A13	(tuning)	A13	M2 TUN1	0, 1, 2	-	-	0		21	N
	A14	(on-line tuning)	A14	M2 TUN2	0, 1	-	-	0		1	N
	A15	(no-load current)	A15	M2-Io	0.00 to 2000 A	A	0.01	standard rated value		19	N
	A16	(%R1 setting)	A16	M2-%R1	0.00 to 50.00%	%	0.01	standard rated value		5	Y
	A17	(%X setting)	A17	M2-%X	0.00 to 50.00%	%	0.01	standard rated value		5	Y
	A18	(slip compensation control 2)	A18	SLIP COMP2	0.00 to 15.00 Hz	Hz	0.01	0.00		5	Y

Protective Operations

List of Protective Functions

In the event of an abnormality in the inverter's operation, the protective function will activate immediately to trip the inverter and display the alarm name on the LED monitor while the motor coasts to a stop. A list of the alarms with their explanations is included in the table below, and troubleshooting charts in Section 7.

Table 6.1.1 List of Alarms and Causes

Alarm Name	Keypad Panel Display		Cause of Activation	
	LED	LCD		
Overcurrent	OC1	OC DURING ACC	During acceleration	If the inverter output current momentarily exceeds the overcurrent detection level, due to an overcurrent in the motor, or a short-circuit or ground fault in the output circuit, the protective function is activated during heavy load.
	OC2	OC DURING DEC	During deceleration	
	OC3	OC AT SET SPD	Running at constant speed	
Ground fault	EF	GROUND FAULT	If a ground fault in the inverter output circuit is detected, the protective function is activated (for 40 Hp or more only). If a ground fault occurs in an inverter rated at 30 Hp or less, the inverter is protected by the overcurrent protection. If protection against personal injury or property damage is required, install a separate ground-fault protective relay or ground leakage circuit breaker.	
Overvoltage	OU1	OV DURING ACC	During acceleration	If the DC link voltage in the main circuit exceeds the overvoltage detection level (230V series: 400V DC, 460V series: 800V DC), due to an increase in the regenerating current from the motor, the output is shut down. However, protection against inadvertent overvoltage (e.g., high-voltage line) may not be provided
	OU2	OV DURING DEC	During deceleration	
	OU3	OV AT SET SPD	Running at constant speed	
Undervoltage	LU	UNDERVOLTAGE	If the DC link voltage in the main circuit falls below the undervoltage detection level (230V series: 400V DC, 460V series: 800V DC) due to a lowered power supply, the output is shut down. If function F14 Restart after momentary power failure was selected, an alarm is not displayed. In addition, if the supply voltage falls to a level unable to maintain control power, an alarm may not be displayed.	
Input phase loss	Lin	PHASE LOSS	If input power L1/R, L2/S and L3/T has any phase of the 3 phase power "OPEN" or if there is a significant disparity between the phases, the retifying diodes or smoothing capacitors may be damaged. An Alarm is displayed and the protective function is activated during heavy load.	
Overheating of heat sink	OH1	FIN OVERHEAT	If the temperature of the heat sink rises due to a cooling fan failure, or the temperature of the heatsink is too low, the protective function is activated during heavy load.	
External alarm	OH2	EXT ALARM	If the external alarm contacts on the braking unit, braking resistor, or external thermal O/L relay are connected to the control circuit terminals (THR), the contacts will be actuated according to contact signals.	
Overheating internally	OH3	HIGH AMB TEMP	If the temperature inside the inverter rises due to poor ventilation, etc., the protective function is activated.	
Overheating of braking resistor	dbH	DBR OVERHEAT	If electronic thermal O/L relay (for braking resistor) function F13 is selected, the protective function is activated to prevent the resistor from burning due to overheating caused by frequent use of the braking resistor.	
Motor 1 overload	OL1	MOTOR1 OL	The protective function is activated if the motor current exceeds the preset level, provided that electronic thermal O/L relay 1 function F10 has been selected.	
Motor 2 overload	OL2	MOTOR2 OL	If the second motor current exceeds the preset level when the operation is switched to drive the second motor, the protective function is activated, provided that electronic thermal O/L relay 2 of function A04 was selected.	
Drive overload	OLU	INVERTER OL	If the output current exceeds the rated overload current, the protective function is activated to provide thermal protection against overheating of the semiconductor elements in the inverter's main circuit.	
Blown fuse	FUS	DC FUSE OPEN	If the fuse in the inverter is blown out following a short-circuit or damage to the internal circuit, the protective function is activated (for 40 Hp or more only).	
Memory error	Er1	MEMORY ERROR	If a memory error occurs, such as missing or invalid data, the protective function is activated.	
Keypad panel communication error	Er2	KEYPD COM ERR	If a communication error or interrupt between the keypad panel and control circuit is detected, the protective function is activated.	
CPU error	Er3	CPU ERROR	If a CPU error occurs due to noise, etc., the protective function is activated.	
Option error	Er4	OPTN COM ERR	Error occurred while using an optional unit.	
	Er5	OPTION ERROR		
Operating error	Er6	OPR PROCD ERR	Detects drive operating procedure error during drive startup. FWD or REV connected to terminal CM when Main power is applied to drive (F02 setting 3 or 4). Stop key on keypad is pressed in terminal operation (F02 setting 1 or 3). Detected timed alarm stop command.	
Output wiring error	Er7	TUNING ERROR	If there is an open circuit or connection error in the inverter output wiring during an auto-tuning procedure, the protective function is activated.	
Modbus RTU error	Er8	RS485 COM ERR	If an error occurs while using Modbus-RTU, the protective function is activated.	

Note: Number in fron of Alarm Code indicates multiple alarms. See page 4-15.

Alarm Reset

To release the trip status, enter the reset command by pressing the RESET key on the keypad panel or sending the appropriate signal to the RST terminal after removing the cause of the trip. Since the reset command is an edge operation, input a command sequence such as OFF-ON-OFF as shown in Fig.6-2-1.

When releasing the trip status, set the operation command to OFF. If the operation command is set to ON, inverter will start operation after resetting.

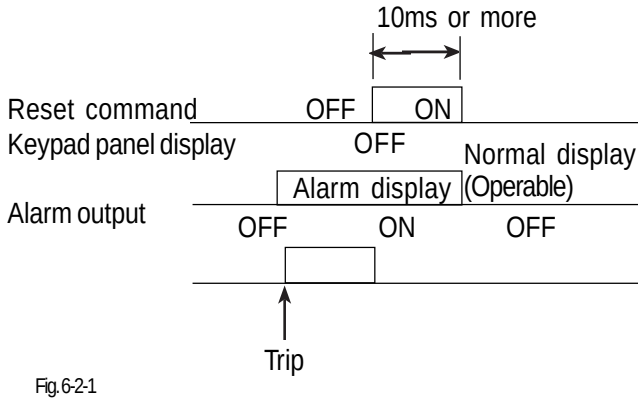

Fig.6-2-1

WARNING

If the alarm reset is activated with the operation signal ON, the inverter will restart suddenly, which may be dangerous. To ensure safety, disable the operating signal when releasing the trip status, as accident may result.

Warranty Parts and Service

The purpose of this section is to provide specific instructions to the user of the standard drive referenced in this book regarding warranty administration and how to obtain assistance on both in-warranty and out-of-warranty equipment.

For all warranty procedures, refer to section 10 of this instruction manual to identify the part or assembly.

If assistance is required to determine warranty status, identify defective parts, or obtain the name of your local distributor, call:

Saftronics, Inc.

Technical Support
5580 Enterprise Parkway
Ft. Myers, FL 33905
Phone: 941-693-7200
Fax: 941-693-2431

Before calling the number at left to determine warranty status, the drive serial number will be required. This is located on the drive nameplate. If the drive is still under warranty, further information will be required per the "In-Warranty Failure Checklist" shown on page 9-2 of this instruction manual. Please complete and return the Warranty Registration Card located inside back cover.

OUT-OF WARRANTY PROCEDURES

When the defective part has been identified, contact your local authorized Saftronics drives distributor to order replacement parts.

Replacement Parts

Catalog No.	Rating	Drive HP & Quantity per drive											
		1/4	1/2	1	2	3	5	7.5	10	15	20	25	30
GP10 230VAC, 30HP and Below													
Main Control Card													
SG11CPCBB1		1	1	1	1	1	1	1	1	1	1	1	1
Gate Driver & Power Supply Card													
SG11PPCBG2002		1											
SG11PPCBG2004			1										
SG11PPCBG2008				1									
SG11PPCBG2015					1								
SG11PPCBG2022						1							
SG11PPCBG2037							1						
SG11PPCBG2055								1	1				
SG11PPCBG2075										1			
SG11PPCBG2110											1		
SG11PPCBG2150												1	
SG11PPCBG2185													1
KEYPAD PANEL (Only one type per drive)													
STPAG11S	NEMA Type1	1	1	1	1	1	1	1	1	1	1	1	1
STPAG11S4	NEMA Type4	1	1	1	1	1	1	1	1	1	1	1	1
CAPACITOR UNIT		*	*	*									
SG11CAP01	PCB				1								
SG11CAP02	PCB					1							
SG11CAP03	PCB						1						
SG11CAP09	2700µFx1							1	1		2		
SG11CAP10	3900µFx1									1		2	
SG11CAP11	4700µFx2												2
	* Located on Gate drive & Power supply Card												
FAN													
SG11FAN01					1	1	1						
SG11FAN202								1	1	1	2	2	2
POWER MODULE		*	*	*									
SPS11046	30A 600V				1	1							
SPS11047	50A 600V						1						
S6MBP75RS060	75A 600V							1	1				
S6MBP100RS060	100A 600V									1			
S6MBP150RS060	150A 600V										1	1	
S6MBP200RS060	200A 600V												1
	* Located on Gate drive & Power supply Card												
RECTIFIER MODULE		*	*	*	*	*	*						
SPVC758	75A 800V							1	1	1			
SCLK120AA80	120A 800V										1	1	
SCLK180AA80	180A 800V												1
	* Located on Gate drive & Power supply Card												
CHARGE RESISTOR		*	*	*	*	*	*						
S30W66	30W 6.6WJ							1	1	1			
S80W25	80W 2.5WJ										1	1	1
	* Located on Gate drive & Power supply Card												
FRONT COVER													
SG11UPCG008P		1	1	1									
SG11UPCG040P					1	1	1						
SG11UPCG075P								1	1	1			
SG11UPCG220P											1	1	1
INTERNAL DB RESISTOR													
SG11DBR0082	100W 40W	1	1	1									
SG11DBR0372	40W 80W				1	1	1						
SG11DBR0752								1	1				

Catalog No.	Rating	Drive HP & Quantity per drive						
		40	50	60	75	100	125	150
GP10 230 VAC, 40HP and Above								
Main Control Card								
SEP4113B1		1	1	1	1	1	1	1
Gate Driver & Power Supply Card								
SEP3956C1		1	1					
SEP3956C2				1				
SEP3956C3					1	1		
SEP3957C1							1	
SEP3957C2								1
KEYPAD PANEL								
STPAG11S4		1	1	1	1	1	1	1
DC CAPACITOR								
SLNT2G302MSMAFF	400V 3000µF	4	4					
SHCGHA2G362N3K	400V 3600µF			4				
SHCGHA2G452NE3K	400V 4500µF				4			
SHCGHA2G592N3K	400V 5900µf					4	5	6
FAN								
SFBA09A24H1B0		1	1	1	2	2	2	4
(Standard)								
S4715PS22TB30		2	2					
2750MTP15				2	2		3	4
S6250MG1	80W 7.5ohm					2		
(For NEMA12 Heatsink)								
SUHS4556MLOT1		2	2					
S2750MTP15OT1				2	2		3	4
SU6250MKG1LTPOT1						2		
IGBT MODULE								
S2MBi300NB060		3	3					
SCM400DU12H206				3				
S2MBi300NB06001					6	6	9	12
RECTIFIER MODULE								
SPD1008AC		3	3	6	6	9	9	9
CHARGE RESISTOR								
SHF5C5504		1	1	1	1	1	2	2
DC CONTACTOR								
SFC3UL	AC220VAUX2B	1	1					
SFC1UL	AC220VAUX2B			2	2	2		
SFC4UL	AC220VAUX2B						2	
SSC7NUL	AC200-240V							1
DC FUSE								
SCR2L260UL		1	1	1				
SCR2L400UL					1	1		
SA50P6004							1	1
INPUT MODULE CARD								
SEP3985C1		1	1	1	1	1		
SEP3985C3							1	1

Catalog No.	Rating	Drive HP & Quantity per drive										
		1/2	1	2	3	5	7.5	10	15	20	25	30
GP10 460 VAC, 30HP and Below												
Main Control Card												
SG11CPCBB1		1	1	1	1	1	1	1	1	1	1	1
Gate Driver & Power Supply Card												
SG11PPCBG4004		1										
SG11PPCBG4008			1									
SG11PPCBG4015				1								
SG11PPCBG4022					1							
SG11PPCBG4037						1						
SG11PPCBG4055							1	1				
SG11PPCBG4075									1			
SG11PPCBG4110										1		
SG11PPCBG4150											1	
SG11PPCBG4185												1
KEYPAD PANEL (Only one type per drive)												
STPAG11S	NEMA Type1	1	1	1	1	1	1	1	1	1	1	1
STPAG11S4	NEMA Type4	1	1	1	1	1	1	1	1	1	1	1
CAPACITOR UNIT		*	*									
SG11CAP04	PCB			1								
SG11CAP05	PCB				1							
SG11CAP06	PCB					1						
SG11CAP07	1500μFx2						2	2				
SG11CAP08	2000μFx2								2			
SG11CAP09	2700μFx2									2		
SG11CAP10	3900μFx2										2	
SG11CAP11	4700μFx2											2
	* Located on Gate drive & Power supply Card											
FAN												
SG11FAN01				1	1	1						
SG11FAN02							1	1	1	2	2	2
POWER MODULE		*	*									
SPS12046	15A 1200V			1	1							
SPS12047	25A 1200V					1						
S6MBP50RS120	50A 1200V						1	1	1			
S6MBP75RS120	75A 1200V									1	1	
S6MBP100RS120	100A 1200V											1
	* Located on Gate drive & Power supply Card											
RECTIFIER MODULE		*	*	*	*	*						
SPVC7516	75A 1600V						1	1	1			
SCLK70AA160	70A 1600V									1	1	
SCLK100AA160	100A 1600V											1
	* Located on Gate drive & Power supply Card											
CHARGE RESISTOR		*	*	*	*	*						
S30W200	30W 20WJ						1	1	1			
S80W100	80W 10WJ									1	1	1
	* Located on Gate drive & Power supply Card											
FRONT COVER												
SG11UPCG008P		1	1									
SG11UPCG040P				1	1	1						
SG11UPCG075P							1	1	1			
SG11UPCG220P										1	1	1

Catalog No.	Rating	Drive HP & Quantity per drive																
		40	50	60	75	100	125	150	200	250	300	350	400	450	500	600	700	800
GP10 460VAC, 40HP and Above																		
Main Control Card																		
SEP4113B1		1	1	1	1	1	1	1	1	1	1	1	1	1	1	1	1	1
Gate Driver & Power Supply Card																		
SEP3959C1		1	1															
SEP3959C2				1														
SEP3959C3					1	1												
SEP3959C4							1											
SEP3959C5								1	1									
SEP3957C3										1	1							
SEP3957C4												1	1	1				
SEP3957C5															1	1	1	1
GATE DRIVE AMPLIFIER CARD																		
SEP4142															3	3	3	3
KEYPAD PANEL																		
STPAG11S4		1	1	1	1	1	1	1	1	1	1	1	1	1	1	1	1	1
DC CAPACITOR																		
SLNT2G302MSMAFF	400V 3000µF	4	4															
SHCGHA2G362N3K	400V 3600µF			4														
SHCGHA2G452NE3K	400V 4500µF				4			6										
SHCGHA2G592N3K	400V 5900µf					4	4		6	8		12						
SHCGHA2G742N3K	400V 7400µF										8		12	12				
SHCGHA2G932N3KG	400V 9300µF														20	20	26	26
FAN UNIT																		
SFBA09A24H1B0		1	1	1	1	1	2	2	2	3	3	4	4	4	4	4		
SMRS18-DUL															3	3	4	4
STHB1-UHS4556M																	4	4
S(Standard)																		
S4715PS22TB30		2	2															
S2750MTP15				2	2			3	3									
S6250MG1						2	2			3	3	4	4	4				
(For NEMA12 Heatsink)																		
SUHS4556MLOT1		2	2															
S2750MTP15OT1				2	2			3	3									
SU6250MKG1LTPOT1						2	2			3	3	4	4	4				
IGBT MODULE																		
S2MBi150PC14002		3	3															
SCM200DU24H203				3														
S2MBi300P14002					3	3												
SCM200DU24H202							6											
S2MBi300P14003								6	6	9	9	12	12	12	18	18	24	24
RECTIFIER MODULE																		
SPD6016A		3	3	3						12	12							
SPD10016A					3	3	6	6	6			12	12	12	24	24	30	30

Catalog No.	Rating	Drive HP & Quantity per drive																
		40	50	60	75	100	125	150	200	250	300	350	400	450	500	600	700	800
GP10 460VAC, 40HP and Above																		
IGBT MODULE																		
S2MBi150PC14002		3	3															
SCM200DU24H203				3														
S2MBi300p14002					3	3												
SCM200DU24H202							6											
S2MBi300P14003								6	6	9	9	12	12	12	18	18	24	24
RECTIFIER MODULE																		
SPD6016A		3	3	3						12	12							
SPD10016A					3	3	6	6	6			12	12	12	24	24	30	30
CHARGE RESISTOR																		
SHF5C5504	80W 7.5ohm	1	1	1	1	1	1	2	2	2	3	3	4	4				
SGRZG400															2	2	2	2
DC CONTACTOR																		
SFC1UL	AC220VAUX2B	1	1	1	1	1	2	2	2									
SFC4UL	AC220VAUX2B									2	2							
SSC7NUL	AC200-240V											1						
SSC8NUL	AC200-240V												1	1				
SSCN8	AC200-240V														2	2	2	2
DC FUSE																		
SCR6L150UL	600V 150A	1	1	1														
SCR6L200UL	600V 200A				1													
SCR6L300UL	600V 300A					1	1											
SA70Q4004								1	1									
SA70Q5004										1								
SA70Q6004											1	1						
SA70QS8004													1	1				
SA70P16004TA															1	1		
SA70P20004																	1	1
TRANSFORMER																		
SHF5C55025512VA		1	1															
SHF5C550312524VA				1	1	1	1											
SHF5B661330016VA								1	1	1	1	1	1	1				
SHF5B395170020VA															1	1	1	1
INPUT MODULE CARD																		
SEP3985C2		1	1	1	1	1	1	1	1									
SEP3985C4										1	1	1	1	1	1	1	1	1

Three-phase 230V series - Variable Torque

Type designation GP10E1ST32_ _ _ ** (NEMA Type1) GP10E2ST32_ _ _ ** (NEMA Type12) GP10E4ST32_ _ _ ** (NEMA Type4) GP10E8ST32_ _ _ ** (Open, Type 12 Heatsink) GP10E9ST32_ _ _ ** (Open) ** Indicates product revision			F25	F50	001	002	003	005	007	010	015	020	025	030	040	050	060	075	100	125	150
Nominal 230V system applied mot		HP	/41	1/2	1	2	3	5	7.5	10	15	20	25	30	40	50	60	75	100	125	150
Output ratings	Rated Capacity *1)	kVA	0.59	1.1	1.9	3.1	4.3	6.7	8.7	11	16	21	26	31	45	57	71	85	112	137	165
	Rated Voltage *2)	V	3-phase, 200V /50Hz; 200V ,220V ,230V /60Hz																		
	Rated Current *3)	A	1.5	3.0	5.0	8.0	11	17	22	29	42	55	67	78	115	145	180	215	283	346	415
	Overload Capability		110% of rated current for 1min																		
	Rated Frequency	Hz	50, 60Hz																		
Input rating	Phases, Voltage, Frequency Voltage / frequency variations		3-phase, 200 to 230V , 50/60Hz -Voltage : +10 to -15% (Voltage unbalance *5) : 2% or less												3-phase, 200 to 220V /50Hz , 200 to 230V /60Hz -Frequency :+5 to -5%						
	Momentary voltage dip capability *6)		When the input voltage is 165V or more, the inverter can be operated continuously. If the AC Line voltage is below rated, the drive will not provide the 15ms ride-thru. The smooth recovery method is selectable.																		
Output frequency	Setting	Maximum Freq.	50 to 120Hz																		
		Base Freq.	25 to 120Hz																		
		Starting Freq.	0.1 to 60Hz , Continuous time : 0.0 to 10.0s																		
		Carrier Freq. *8)	0.75 to 15kHz The minimum carrier frequency changes depend on maximum output frequency.												0.75 to 10kHz					0.75 to 6kHz	
	Accuracy (Stability)		-Analog setting : ±0.2% of Maximum frequency (at 25 ±10 degrees C) -Digital setting : ±0.01% of Maximum frequency (at -10 to +50 degrees C)																		
	Setting resolution		-Analog setting : 1/3000 of Maximum frequency ex.) 0.02Hz at 60Hz , 0.04Hz at 120Hz -Digital setting : 0.01Hz at Maximum frequency of up to 99.99Hz (0.1Hz at Maximum frequency of 100Hz and above) -Link setting :Two methods are selectable. 1/20000 of Maximum frequency ex. 0.003Hz at 60Hz 0.01Hz (Fixed)																		
Control	Volt/Freq Characteristic		80 to 240V (with AVR control) at base and maximum frequency, adjustable																		
	Torque boost														Constant torque load					Variable torque load	
			Automatic (setting code)												0.0					-	
			Manual (setting code)												2.0 to 20.0					0.1 to 1.9	
Enclosure			NEMA Type1, Type4												NEMA Type1, Type12					Open, Open with NEMA Type 12 Heatsink, NEMA 1	
Cooling method			Natural												Fan cooling						
Standards			-UL/cUL -LOW VOLTAGE directive -EMC directive -IEC 61800-2 (Rating, specifIcations for low voltage adjustable frequency a.c. power drive systems) -IEC 61800-3 (EMC product standard including specific test methods)																		

NOTES

*1) Inverter output capacity [kVA] at 230V.

*2) Output voltage is proportional to the power supply voltage and can't exceed the power supply voltage.

*3) Current derating may be required in case of low impedance load such as high frequency motor.

*5) Reference to the IEC 61800-3(5.2.3)

$$\text{Unbalance in power supply voltage [\%]} = \frac{\text{(Maximum voltage[V] - Minimum voltage[V])}}{\text{3-phase averaging voltage[V]}} \cdot 100 \text{ [\%]}$$

*6) 85% load

*8) If carrier frequency is set at more than 10kHz and an overheat condition (detected by internal thermal sensor) occurs, drive will automatically reduce carrier frequency to 8kHz , in order to avoid trip. (Available up to 30HP unit)

Three-phase 460V series - Variable Torque

Type designation GP10E1ST34___** (NEMA Type1) GP10E2ST34___** (NEMA Type12) GP10E4ST34___** (NEMA Type 4) GP10E8ST34___** (Open, Type 12 Heatsink) GP10E9ST34___** (Open)			F50	001	002	003	005	007	010	015	020	025	030	040	050	060	075	100	125	150	200	250	300	350	400	450	500	600	700	800
Norminal 460V system applied motor		HP	1/2	1	2	3	5	7.5	10	15	20	25	30	40	50	60	75	100	125	150	200	250	300	350	400	450	500	600	700	800
	Rated Capacity *1)	kVA	1.1	1.9	2.9	4.3	7.1	9.9	13.1	18.3	23.9	29.4	35.0	47	59	72	89	119	140	167	242	242	300	330	386	414	578	590	669	765
	Rated Voltage *2)	V	3-phase, 380V , 400V , 415V /50Hz , 380V , 400V , 440V , 460V /60Hz																										
	Rated Current *3)	A	1.5	2.5	3.7	5.5	9.0	12.5	16.5	23	30	37	44	60	75	91	112	150	176	210	304	304	377	415	485	520	650	740	840	960
	Overload Capability		110% of rated current for 1min ,											110% of rated current for 1min ,															
	Rated Frequency	Hz	50, 60Hz																										
Input ratings	Phases, Voltage, Frequency		3-phase, 380 to 480V , 50/60Hz											3-phase, 380 to 440V /50Hz , 380 to 480V /60Hz * 380V/50Hz and 380 to 415V/60Hz *4)																
	Voltage / frequency variations		-Voltage : +10 to -15% (Voltage unbalance *5) : 2% or less -Frequency :+5 to -5%																										
	Momentary voltage dip capability *6)		When the input voltage is 310V or more, the inverter can be operated continuously. If the AC Line voltage is below rated, the drive will not provide the 15ms ride-thru. The smooth recovery method is selectable.																										
Output frequency	Setting	Maximum Freq.	50 to 120Hz																										
		Base Freq.	25 to 120Hz																										
		Starting Freq.	0.1 to 60Hz , Continuous time : 0.0 to 10.0s																										
		Carrier Freq. *8)	0.75 to 15kHz The minimum carrier frequency changes depend on maximum output frequency.											0.75 to 10kHz					0.75 to 6kHz										
	Accuracy (Stability)		-Analog setting : ±0.2% of Maximum frequency (at 25 ±10 degrees C) -Digital setting : ±0.01% of Maximum frequency (at -10 to +50 degrees C)																										
	Setting resolution		-Analog setting : 1/3000 of Max. frequency ex.) 0.02Hz at 60Hz , 0.04Hz at 120Hz -Digital setting : 0.01Hz at Maximum frequency of up to 99.99Hz (0.1Hz at Maximum frequency of 100Hz and above) -Link setting : Two methods are selectable. 1/20000 of Maximum frequency ex. 0.003Hz at 60Hz 0.01Hz (Fixed)																										
Control	Volt/Freq Characteristic		320 to 480V (with AVR control) at base and maximum frequency, adjustable																										
	Torque boost													Constant toruque load						Variable torque load									
			Automatic (setting code) : 0.0 -																										
			Manual (setting code) : 2.0 to 20.0 0.1 to 1.9																										
Enclosure			NEMA Type1, Type 4											NEMA Type1, Type12						Open, Open with NEMA Type 12 Heatsink, NEMA Type 1									
Cooling method			Natural											Fan cooling															
Standards			-UL/cUL -LOW VOLTAGE directive -EMC directive -IEC 61800-2 (Rating, specifications for low voltage adjustable frequency a.c. power drive systems) -IEC 61800-3 (EMC product standard including specific test methods)																										

NOTES

*1) Inverter output capacity [kVA] at 460V.

*2) Output voltage is proportional to the power supply voltage and can't exceed the power supply voltage.

*3) Current derating may be required in case of low impedance load such as high frequency motor.

*4) Change the tap of auxiliary transformer.

380V/50Hz and 380 to 415V/60Hz : Change over CN UX connector from U1 part to U2 part. (Reference to the Instruction manual)

Input voltage	CN UX connector
400 to 440V/50Hz, 440 to 480V/60Hz	U1 (Factory setting)
380V/50Hz (398V or smaller), 380 to 415V/60Hz (430V or smaller)	U2

*5) Reference to the IEC 61800-3(5.2.3)

$$\text{Unbalance in power supply voltage [\%]} = \frac{\text{(Maximum voltage[V] - Minimum voltage[V])}}{\text{3-phase averaging voltageV}} \text{ - 100 [\%]}$$

*6) 85% load

*8) If carrier frequency is set at more than 10kHz and an overheat condition (detected by internal thermal sensor) occurs, drive will automatically reduce carrier frequency to 8kHz , in order to avoid trip. (Available up to 30HP unit)

Three-phase 230V series - Constant Torque

Type designation (* * indicate product revision) GP10E1ST32_ _ _* * (NEMA Type1) GP10E2ST32_ _ _* * (NEMA Type12) GP10E4ST32_ _ _* * (NEMA Type4) GP10E8ST32_ _ _* * (Open, Type 12 Heatsink) GP10E9ST32_ _ _* * (Open)			F25	F50	001	002	003	005 007	010	015	020	025	030	040	050	060	075	100	125	150
Nominal 230V system pplied moto		HP	1/4	1/2	1	2	3	5	7.5	10	15	20	25	30	40	50	60	75	100	125
Output ratings	Rated Capacity *1)	kVA	0.59	1.1	1.9	3.1	4.3	6.7	9.9	13	18	23	29	34	45	57	71	85	112	137
	Rated Voltage *2)	V	3-phase, 200V /50Hz , 200V ,220V ,230V /60Hz																	
	Rated Current *3)	A	1.5	3.0	5.0	8.0	11	17	25	33	46	59	74	87	115	145	180	215	283	346
	Overload Capability		150% of rated current for 1min , 200% of rated current for 0.5s												150% of rated current for 1min , 180% of rated current for 0.5s					
	Rated Frequency	Hz	50, 60Hz																	
Input ratings	Phases, Voltage, Frequency		3-phase, 200 to 230V , 50/60Hz												3-phase, 200 to 220V /50Hz, 200 to 230V /60Hz * 220 to 230V /50Hz *4),					
	Voltage / frequency variations		-Voltage : +10 to -15% (Voltage unbalance *5) : 2% or less) -Frequency :+5 to -5%																	
	Momentary voltage dip capability *6)		When the input voltage is 165V or more, the inverter can be operated continuously. When the input voltage drops below 165V from rated voltage, the inverter can be operated for 15ms . (within 85% load of nominal applied motors) The smooth recovery method is selectable.																	
Output frequency	Setting	Maximum Freq.	50 to 120Hz *11)																	
		Base Freq.	25 to 120Hz *11)																	
		Starting Freq.	0.1 to 60Hz, Continuous time : 0.0 to 10.0s																	
		Carrier Freq. *8)	0.75 to 15kHz The minimum carrier frequency changes depend on maximum output frequency.												0.75 to 10kHz				0.75 to 6kHz	
	Accuracy (Stability)		-Analog setting : +/- 0.2% of Maximum frequency (at 25 10 degrees C) -Digital setting : +/- 0.01% of Maximum frequency (at -10 to +50 degrees C)																	
	Setting resolution		-Analog setting : 1/3000 of Maximum frequency ex.) 0.02Hz at 60Hz -Digital setting : 0.01Hz at Maximum frequency of up to 99.99Hz (0.1Hz at Maximum frequency of 100Hz and above) -Link setting : Two methods are selectable. · 1/20000 of Maximum frequency ex.) 0.003Hz at 60Hz · 0.01Hz (Fixed)																	
Control	Volt/Freq Characteristic		80 to 240V (with AVR control) at base and maximum frequency, adjustable																	
	Torque boost								Constant toruque load						Variable torque load					
			Automatic (setting code) : 0.0 -																	
			Manual (setting code) : 2.0 to 20.0 0 .1 to 1.9 *9)																	
	Starting torque		200% (with Dynamic torque vector control selected)												180% (with Dynamic torque vector control selected)					
Braking	Standard	Braking torque	150%			100%					20% *10)				15 to 10% *10)					
		Time	s	10	5		5				No limit									
		Duty cycle	%	10	5	3	5	3	2	3	2	No limit								
	Options	Braking torque		150%											100%					
		Time	s	90	45	45	45	30	20			10		8	1 0					
		Duty cycle	%	37	22	18	10	7	5			5		5	10					
	DC injection braking		Starting frequency : 0.1 to 60.0Hz , Braking time : 0.0 to 30.0s , Braking level : 0 to 100% of rated current																	
Enclosure			NEMA Type1, Type4											NEMA Type1, Type12	Open, Open with NEMA Type 12 Heatsink, NEMA 1					
Cooling method			Natural			Fan cooling														
Standards			-UL/cUL -LOW VOLTAGE directive -IEC 61800-2 (Rating, specifications for low voltage adjustable frequency a.c. power drive -EMC directive -IEC 61800-3 (EMC product standard including specific test methods)																	

NOTES

*1) Inverter output capacity [kVA] at 230V.

*2) Output voltage is proportional to the power supply voltage and can't exceed the power supply voltage.

*3) Current derating may be required in case of low impedance load such as high frequency motor.

*4) 220 to 230V/50Hz : Order individually

*5) Reference to the IEC 61800-3(5.2.3)

$$\text{Unbalance in power supply voltage [\%]} = \frac{\text{(Maximum voltage[V] - Minimum voltage[V])}}{\text{3-phase averaging voltage[V]}} \times 100 \quad [\%]$$

*6) Input power : 85%

*8) If carrier frequency is set at more than 10kHz and an overheat condition (detected by internal thermal sensor) occurs,inverter will automatically reduce carrier frequency to 8kHz , in order to avoid trip.(Available up to 30HP unit)

*9) When setting into 0.1,the starting torque gets 50%

*10) With a nominal applied motor.(Average torque when the motor decelerates and stops from 60Hz. It may change according to the motor loss.)

*11) Above 120Hz application, please contact the factory.

Three-phase 460V series-Constant Torque

Type designation (* * indicate product revision) GP10E1ST34_ _ _* * (NEMA Type1) GP10E2ST34_ _ _* * (NEMA Type12) GP10E4ST34_ _ _* * (NEMA Type 4) GP10E8ST34_ _ _* * (Open, Type 12 Heatsink) GP10E9ST34_ _ _* * (Open)			F50	001	002	003	005/007	010	015	020	025	030	040	050	060	075	100	125	150	200	250	300	350	400/450	500	600	700	800
Nominal 460V system applied motor		HP	1/2	1	2	3	5	7.5	10	15	20	25	30	40	50	60	75	100	125	150	200	250	300	350	400	450	500	600
	Rated Capacity *1)	kVA	1.1	1.9	2.9	4.3	7.1	10	14	19	23	31	35	47	59	72	89	119	140	167	201	242	300	330	414	466	518	590
	Rated Voltage *2)	V	3-phase, 380V , 400V , 415V /50Hz , 380V , 400V , 440V , 460V /60Hz																									
	Rated Current *3)	A	1.5	2.5	3.7	5.5	9.0	13	18	24	30	39	45	60	75	91	112	150	176	210	253	304	377	415	520	585	650	740
	Overload Capability		110% of rated current for 1min , 200% of rated current for 0.5s										150% of rated current for 1min , 180% of rated current for 0.5s															
	Rated Frequency	Hz	50, 60Hz																									
Input ratings	Phases, Voltage, Frequency		3-phase, 380 to 480V , 50/60Hz										3-phase, 380 to 440V /50Hz , 380 to 480V /60Hz * 380V/50Hz and 380 to 415V/60Hz *4)															
	Voltage / frequency variations		-Voltage : +10 to -15% (Voltage unbalance *5) : 2% or less) -Frequency :+5 to -5%																									
	Momentary voltage dip capability *6)		When the input voltage is 310V or more, the inverter can be operated continuously. When the input voltage drops below 310V from rated voltage, the inverter can be operated for 15ms . (less than 85% load of nominal applied motors) The smooth recovery method is selectable.																									
Output frequency	Setting	Maximum Freq.	50 to 120Hz *10)																									
		Base Freq.	25 to 120Hz *10)																									
		Starting Freq.	0.1 to 60Hz , Continuous time : 0.0 to 10.0s																									
		Carrier Freq. *8)	0.75 to 15kHz The minimum carrier frequency changes depend on maximum output frequency.										0.75 - 10kHz					0.75 to 6kHz										
	Accuracy (Stability)		-Analog setting : ±0.2% of Maximum frequency (at 25 ±10 degrees C) -Digital setting : ±0.01% of Maximum frequency (at -10 to +50 degrees C)																									
	Setting resolution		-Analog setting : 1/3000 of Max. frequency ex.) 0.02Hz at 60Hz , 0.15Hz at 400Hz -Digital setting : 0.01Hz at Maximum frequency of up to 99.99Hz (0.1Hz at Maximum frequency of 100Hz and above) -Link setting : Two methods are selectable. 1/20000 of Maximum frequency ex.) 0.003Hz at 60Hz , 0.01Hz at 400Hz 0.01Hz (Fixed)																									
Control	Volt/Freq Characteristic		320 to 480V (with AVR control) at base and maximum frequency, adjustable																									
	Torque boost												Constant torque load Automatic (setting code) 0.0 Manual (setting code) 2.0 to 20.0					Variable torque load - 0.1 to 1.9 *9)									
	Starting torque		200% (with Dynamic torque vector control selected)															180% (with Dynamic torque vector control selected)										
Braking	Standards	Braking torque	150%				100%						20% *11)															15 to 10% *11)
		Time s	5				5						No limit															
		Duty cycle %	5	3	5	3	2	3	2	No limit																		
	Options	Braking torque	150%											100%														
		Time s	45		45		30	20			10		8	1	0													
		Duty cycle %	22		10		7	5			5		5	10														
	DC injection braking		Starting frequency : 0.1 to 60.0Hz , Braking time : 0.0 to 30.0s, Braking level : 0 to 100% of rated current																									
Enclosure			NEMA Type1, Type 4										NEMA Type1, Type12	Open, Open with NEMA Type 12 Heatsink, NEMA Type 1														
Cooling method			Natural	Fan cooling																								
Standards			-UL/cUL -LOW VOLTAGE directive -IEC 61800-2 Rating, specifications for low voltage adjustable frequency a.c. power drive systems) -EMC directive -IEC 61800-3 (EMC product standard including specific test methods)																									

NOTES

*1) Inverter output capacity [kVA] at 460V.

*2) Output voltage is proportional to the power supply voltage and can't exceed the power supply voltage.

*3) Current derating may be required in case of low impedance load such as high frequency motor.

*4) Change the tap of auxiliary transformer.

380V/50Hz and 380 to 415V/60Hz : Change over CN UX connector from U1 part to U2 part. (Reference to the Instruction manual)

Input voltage	CN UX connector
400 to 440V/50Hz, 440 to 480V/60Hz	U1 (Factory setting)
380V/50Hz (398V or smaller), 380 to 415V/60Hz (430V or smaller)	U2

*5) Reference to the IEC 61800-3(5.2.3)

$$\text{Unbalance in power supply voltage [\%]} = \frac{\text{(Maximum voltage[V] - Minimum voltage[V])}}{\text{3-phase averaging voltageV}} \times 100 \text{ [\%]}$$

*6) Input power : 85%

*8) If carrier frequency is set at more than 10kHz and an overheat condition (detected by internal thermal sensor) occurs, inverter will automatically reduce carrier frequency to 8kHz , in order to avoid trip.(Available up to 30HP unit)

*9) When setting into 0.1, the starting torque gets 50%

*10) Above 120Hz application, please contact the factory

*11) With a nominal applied motor (Average torque when the motor decelerates and stops from 60Hz. It may change according to the motor loss.)

2. Common Specifications

Item			Explanation
Control	Control Method		Sinusoidal wave PWM control (with V/F control, torque vector control.)
	Output frequency	Maximum frequency	50 to 120 Hz variable setting
		Base frequency	25 to 120 Hz variable setting
		Starting frequency	0.1 to 60 Hz variable setting Holding time: 0.0 to 10.0 s
		Carrier frequency	0.75 to 15k Hz (30 HP or less) 0.75 to 10k Hz (40-100 HP) 0.75 to 6kHz (125HP or more)
		Accuracy (stability)	Analog setting: +/- 0.2% or less of the max. frequency (at 25 +/- 10°C) Digital Setting: +/- 0.01% or less of the max frequency (-10 to +50°C)
		Setting resolution	Analog setting: 1/3000 of max. frequency (e.g. 0.02 Hz / 60 Hz, 0.05 Hz / 150 Hz) Digital setting: 0.01 Hz (99.99 Hz or less), 0.1 Hz (100.0 Hz or more)
	Voltage/frequency Characteristics		Output voltage at base frequency can be adjusted separately, such as 80 to 240V (200V series) or 320 to 480V (400V series)
	Torque Boost		Auto: Optimum control corresponding to the load torque. Manual: 0.1 to 20.0 code setting (energy savings reduced torque, constant torque (strong) etc.)
	Accelerating/decelerating time		0.01 to 3600s Four accelerating and decelerating time settings are possible independent of each other by selecting digital input signals.
			In addition to linear acceleration and deceleration, either S-shaped acceleration/deceleration (weal/strong) or curvilinear acceleration/deceleration
			Starting frequency: 0.0 to 60 Hz, braking time: 0.0 to 30.0s Braking levels: 0 to 80%
	Function equipped		Frequency upper and lower limiter, bias frequency, frequency gain, jump frequency, pick-up operation, restart after momentary power failure, switching operation from line to drive, slip compensation control, automatic energy saving operation, regeneration avoiding control, droop control, torque limiting (2-strp), torque control, PID control, second motor switching, cooling fan ON/OFF control.
Operation	Operation method		Keypad panel: Run by FWD REV keys, stop by STOP key. Terminal input: Forward/Stop command, Reverse/Stop command, Coast-to-Stop command, Alarm reset, acceleration/deceleration selection, multistep frequency
	Frequency setting		Keypad panel: setting by UP and DOWN keys External potentiometer: External freq. Setting POT (VR) (1 to 5k ohm) Analog input: 0 to +10V (0 to 5V), 4 to 20 mA, o to ± 10V (FWD/REV operation) +10 to 0 (reverse operation), 20 to 4 mA (reverse operation) UP/DOWN control: Frequency increases or decreases as long as the digital input signals are turned on Multistep frequency selection: Up to 15 steps are selectable by a combination of digital input signals (four kinds) Link operation: Operation by RS485 (standard) Program operation: Pattern operation by program Jogging operation: Jogging operation by FWD, REV key or digital input signals.
	Operation status signal		Transistor output (4 signals): Running, frequency, arrival, frequency detection, overload early warning, etc. Relay output (2 signals): Alarm output (for any fault), multi-purpose output signals Analog output (1 signal): Output frequency, output current, output voltage, output torque, power consumption, etc. Pulse output (1 signal): Output frequency, output current, output power, output torque, power consumption, etc.

Common Specifications (continued)

	Item		Explanation
Indication	Digital display LED		Output frequency, setting frequency, output current, output voltage, motor synchronous speed, line speed, load rotation speed, calculated PID value, PID command value, PID feedback value, alarm code.
	Liquid crystal display		Operation information, operational guide, functional code/name/setting data, alarm information, tester function, motor load rate measuring function (Maximum/average current (rms) during measuring period, maintenance information (integrated operation hours, capacitance measurement for main circuit capacitors, heatsink temperature, etc.
	Language		Six languages (Japanese, English, German, French, Spanish, Italian)
	Lamp display		Charging (voltage residual), operation indication
	Protective function		Overcurrent, short-circuit, ground fault, overvoltage, undervoltage, overload, overheating, blown fuse, motor overload, external alarm, input open-phase, output open0phase (when tuning), braking resistor protection, CPU and memory error, keypad panel communications error, PTC thermistor protection, surge protection, stall prevention, etc.
Environment	Installation location		Indoor, altitude less than 3300 feet (1000m), free from corrosive gas, dust and direct sunlight.
	Ambient temperature		-10 to +50°C (+14 to 122°F) (ventilating cover must be removed under conditions exceeding +40°C (+104°F) for models rated at 30 HP or less)
	Vibration		3mm peak from 2-9 Hz, 9.8 m/s^2 from 9-20 Hz, 2m/s^2 from 20-55 Hz, 1 m/s^2 from 55-200 Hz,
	Storage	Ambient temperature	-25 to 65°C (-13 to 149°F)
		Ambient humidity	5 to 95% (no condensation)

Outline Dimensions-Variable Torque, Constant Torque

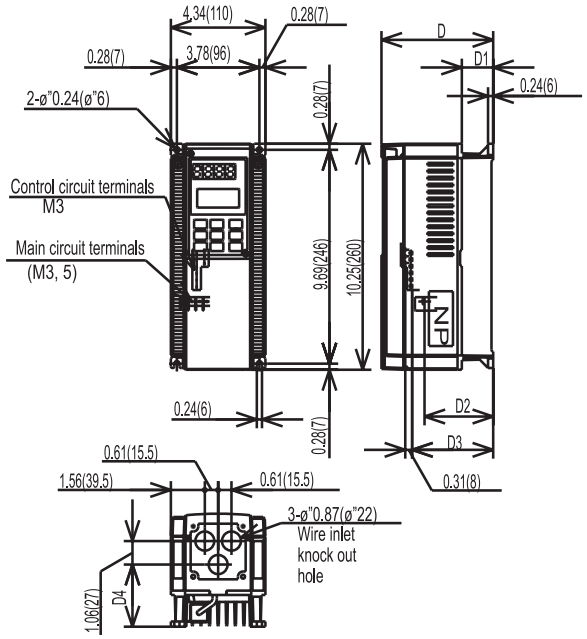

Type	D	D1	D2	D3	D4
1/4, 1/2 Hp	5.12 (130)	1.44 (26.5)	3.15 (80)	3.7 (94)	2.81 (71.5)
1 Hp	5.71 (145)	2.03 (51.5)	3.74 (95)	4.29 (109)	3.41 (86.5)

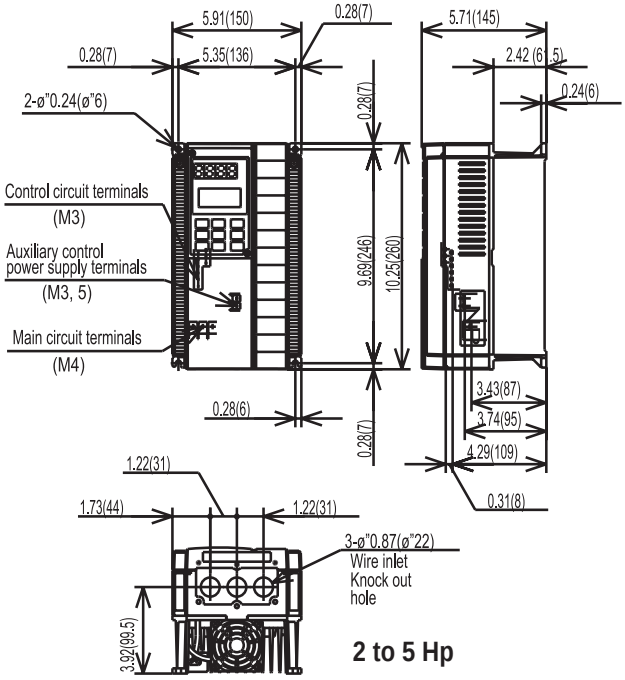

2 to 5 Hp

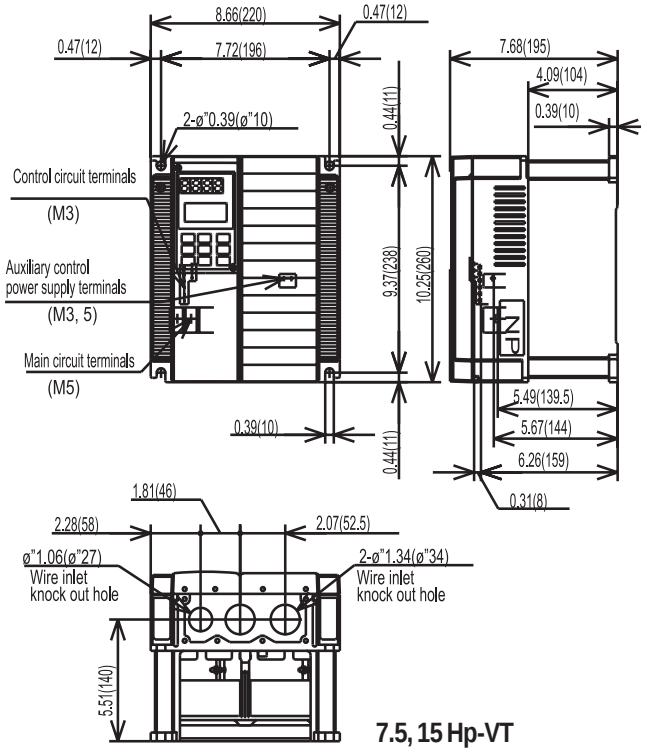

7.5, 15 Hp-VT

7.5, 10 Hp-CT

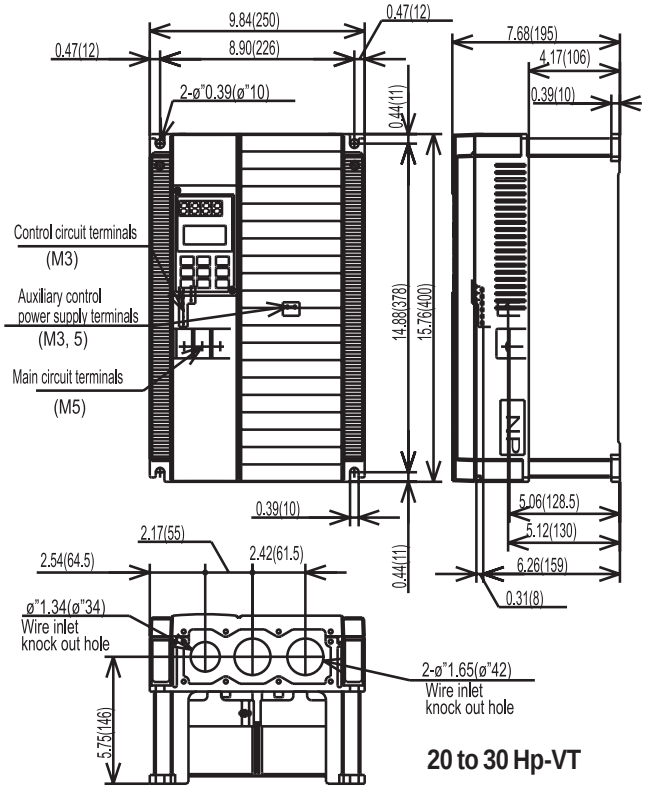

20 to 30 Hp-VT

15 to 30 Hp-CT

Outline Dimensions NEMA 1-Variable/Torque, Constant Torque

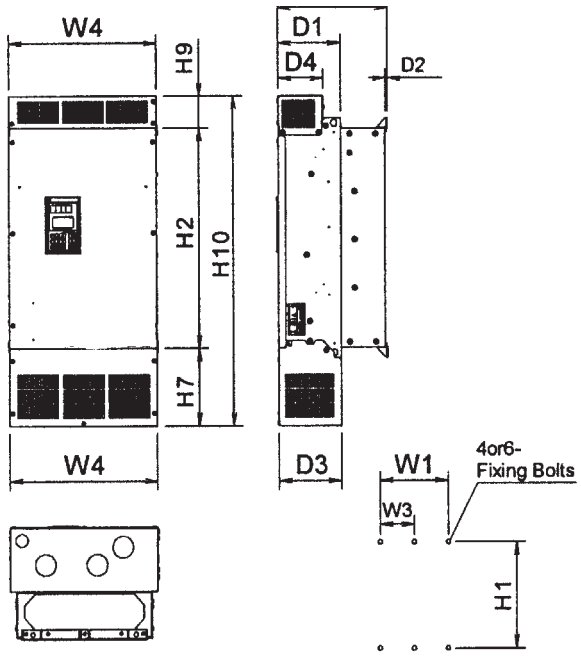

230V Series NEMA 1-Variable/Torque, Constant Torque

Hp	DIMENSIONS inches (mm)														Mtg.	Wt.
	W1	W3	W4	H1	H2	H3	H6	H7	H9	H10	D	D2	D3	D4	Bolts	Lb (kg)
40/30	9.4	–	13.5	20.9	19.7	20.2	0.4	7.1	3	29.7	10	0.2	5.7	4.1	M8	70
50/40	(240)		(342)	(530)	(500)	(512)	(9)	(180)	(75)	(755)	(255)	(4)	(145)	(105)		(32)
60/50	10.8		14.9	23.4	22.2	22.7		7.9		33.1	10.6					86
	(275)		(377)	(595)	(565)	(577)		(200)		(840)	(270)					(39)
75/65				28.3	27.2	27.6				38						106
				(720)	(690)	(702)				(965)						(48)
100/75																110
																(50)
125/100	16.9		21		27	27.4	0.5	11.1	3.3	41.3	11.2			3.6	M12	172
	(430)		(533)		(685)	(695)	(13)	(283)	(83)	(1050)	(285)			(91)		(78)
150/125	22.8	11.4	26.9	33.5	32.1	32.5		15.1		50.4	14.2		8.7	6.5		282
	(580)	(290)	(683)	(850)	(815)	(825)		(383)		(1280)	(360)		(220)	(166)		(128)

460V Series NEMA 1-Variable/Torque, Constant Torque

Hp	DIMENSIONS inches (mm)														Mtg.	Wt.
	W1	W3	W4	H1	H2	H3	H6	H7	H9	H10	D	D2	D3	D4	Bolts	Lb (kg)
40/30	9.4	–	13.5	20.9	19.7	20.2	0.4	7.1	3	29.7	10	0.2	5.7	4.1	M8	70
50/40	(240)		(342)	(530)	(500)	(512)	(9)	(180)	(75)	(755)	(255)	(4)	(157)	(105)		(32)
60/50	10.8		14.9								10.6					82
	(275)		(377)								(270)					(37)
75/65				25.8	24.6	25.1				34.6						95
				(655)	(625)	(637)				(880)						(43)
100/75																97
																(44)
125/100				28.3	27.2	27.6		7.9		38						115
				(720)	(690)	(702)		(200)		(965)						(52)
150/125	16.9		21	28	26.6	27	0.5	8.2	3.3		12.4		6.9	4.7	M12	174
200/150	(430)		(533)	(710)	(675)	(685)	(13)	(208)	(83)		(315)		(175)	(121)		(79)
250/200				38	37	37		13		53.1	14.2		8.7	7		245
300/250				(970)	(935)	(945)		(333)		(1350)	(360)		(220)	(166)		(111)
350/300	22.8	11.4	26.9					15.1		55.1						337
400/350	(580)	(290)	(683)					(383)		(1400)						(153)
450/350																

Surface Mount

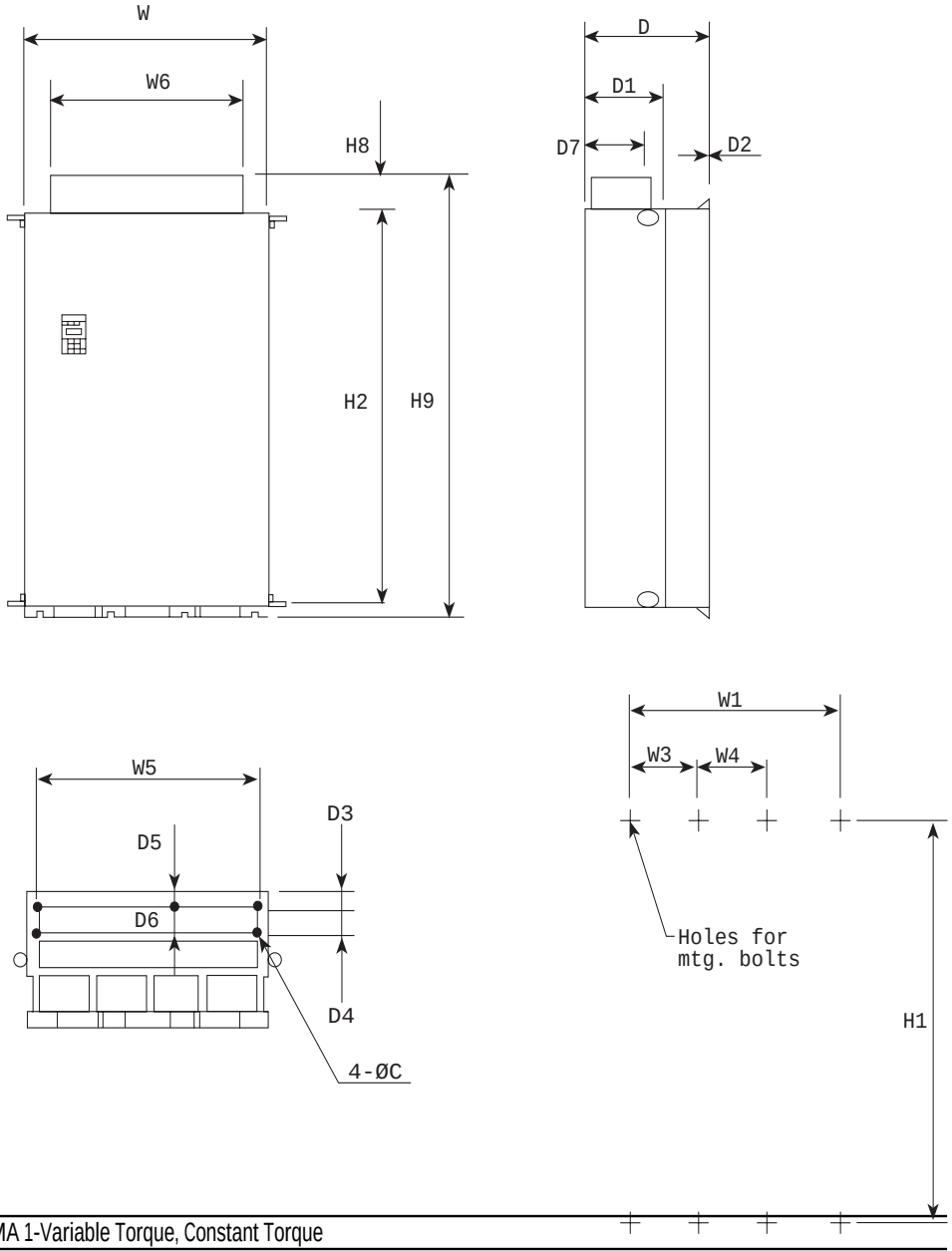

460V Series NEMA 1-Variable Torque, Constant Torque

Hp	DIMENSIONS inches (mm)												
	W	W1	W3	W4	W5	W6	H1	H2	H4	H8	H9	D	D1
500/400	26.8	22.8	11.4	–	24.0	21.9	53.9	52.4	52.6	3.3	57.1	17.7	11.2
600/450	(680)	(580)	(290)		(610)	(555)	(1370)	(1330)	(1335)	(084)	(1450)	(450)	(285)
700/500	34.6	30.7	10.2	10.2	31.9	29.7							
800/600	(880)	(780)	(260)	(260)	(810)	(755)							

Hp	DIMENSIONS inches (mm)							
							Mtg. Bolts	Wt. Lb (kg)
	D2	D3	D4	D5	D6	D7		
500/400	0.3	2.0	3.9	1.4	4.5	8.7	M12	562
600/450	(6)	(50)	(100)	(35)	(115)	(220)		(255)
700/500								804
800/600								(365)

Outline Dimensions Open Type-Variable Torque/ Constant Torque

Surface Mount

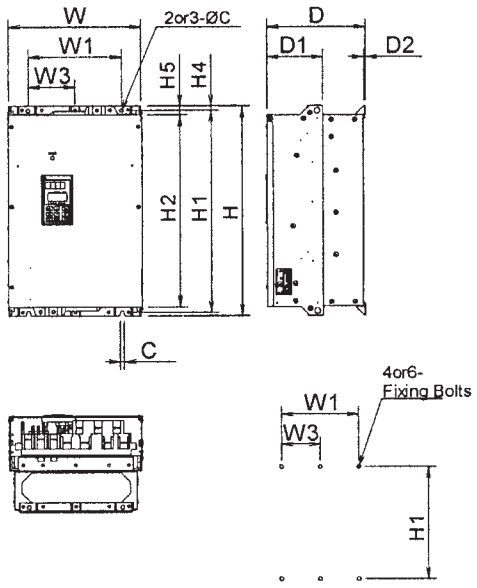

Through Panel Mount

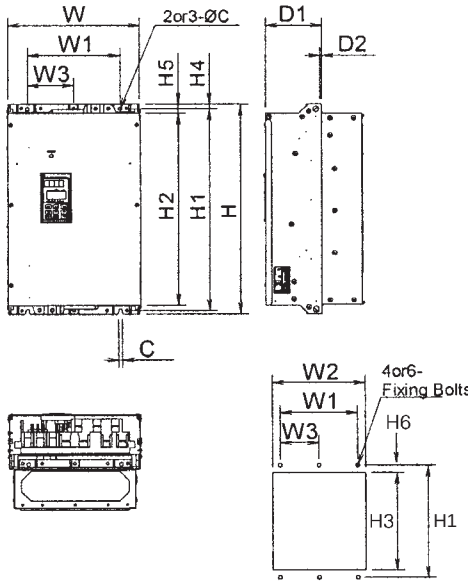

230V Series-Variable Torque, Constant Torque

Hp	DIMENSION Inch (mm)															Mtg.	Weight
230V	W	W1	W2	W3	H	H1	H2	H3	H4	H5	H6	D	D1	D2	C	Bolts	Lb (kg)
40/30	13.4	9.4	12.8		21.7	20.9	19.7	20.2	0.5	1	0.4	10	5.7	0.2	0.4	M8	64
50/40	(340)	(240)	(326)		(550)	(530)	(500)	(512)	(12)	(25)	(9)	(255)	(145)	(4)	(10)		(29)
	14.8	10.8	14.2		24.2	23.4	22.2	22.7				10.6					79
60/50	(375)	(275)	(361)		(615)	(595)	(565)	(577)				(270)					(36)
					29.1	28.3	27.2	27.6									97
75/65					(740)	(720)	(690)	(702)									(44)
																	101
100/75																	(46)
	20.9	16.9	20.1		29.5		27	27.4	0.6	1.3	0.5	11.2			0.6	M12	154
125/100	(530)	(430)	(510)		(750)		(685)	(695)	(16)	(33)	(13)	(285)			(15)		(70)
	26.8	22.8	26		34.6	33.5	32.1	32.5				14.2	8.7				253
150/125	(680)	(580)	(660)		(880)	(850)	(815)	(825)				(360)	(220)				(115)

460V Series-Variable Torque, Constant Torque

Hp	DIMENSION Inch (mm)															Mtg.	Weight
460V	W	W1	W2	W3	H	H1	H2	H3	H4	H5	H6	D	D1	D2	C	Bolts	Lb (kg)
40/30	13.4	9.4	12.8		21.7	20.9	19.7	20.2	0.5	1	0.4	10	5.7	0.2	0.4	M8	64
50/40	(340)	(240)	(326)		(550)	(530)	(500)	(512)	(12)	(25)	(9)	(255)	(145)	(4)	(10)		(29)
	14.8	10.8	14.2									10.6					75
60/50	(375)	(275)	(361)									(270)					(34)
					26.6	25.8	24.6	25.1									86
75/65					(675)	(655)	(625)	(637)									(39)
																	88
100/75																	(40)
					29.1	28.3	27.2	27.6									106
125/100					(740)	(720)	(690)	(702)									(48)
150/125	20.9	16.9	20.1			28	26.6	27	0.6	1.3	0.5	12.4	6.9		0.6	M12	154
200/150	(530)	(430)	(510)			(710)	(675)	(682)	(16)	(33)	(13)	(315)	(175)		(15)		(70)
250/200					39.4	38.2	36.8	37.2				14.2	8.7				220
300/250					(1000)	(970)	(935)	(945)				(360)	(220)				(100)
350/300	26.8	22.8	26	11.4													308
400/350	(680)	(580)	(660)	(290)													(140)
450/350																	

Surface Mount

Through Panel Mount

Alternative Through Panel Mount (bottom bracket support by customer supply.

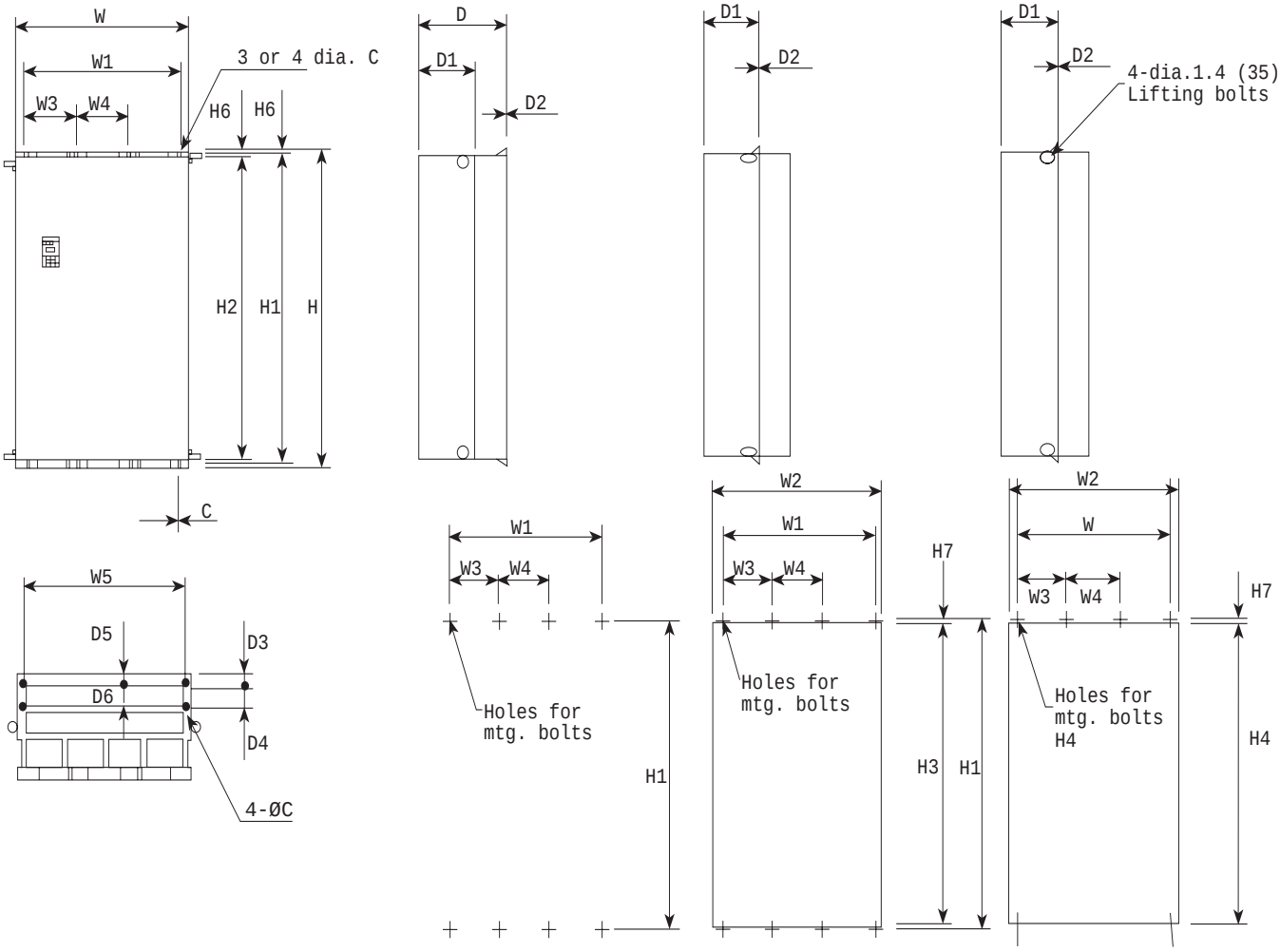

460V Series Open Type-Variable Torque, Constant Torque

Hp	DIMENSIONS inches (mm)															
	W	W1	W2	W3	W4	W5	H	H1	H2	H3	H4	H5	H6	H7	D	D1
500/400	26.8	22.8	26.0	11.4	–	24.0	55.1	53.9	52.4	52.8	52.6	0.6	1.4	0.6	17.7	11.2
600/450	(680)	(580)	(660)	(290)		(610)	(1400)	(1370)	(1330)	(1340)	(1335)	(016)	(035)	(015)	(450)	(285)
700/500	34.6	30.7	33.8	10.2	10.2	31.9										
800/600	(880)	(780)	(860)	(260)	(260)	(810)										

Hp	DIMENSIONS inches (mm)						Mtg. Bolts	Wt. Lb (kg)
	D2	D3	D4	D5	D6	C		
500/400	0.3	2	3.9	1.4	4.5	0.6	M12	551
600/450	(6)	(50)	(100)	(35)	(115)	(015)		(250)
700/500								793
800/600								(360)

Outline Dimensions Open Type with NEMA 12 Heatsink

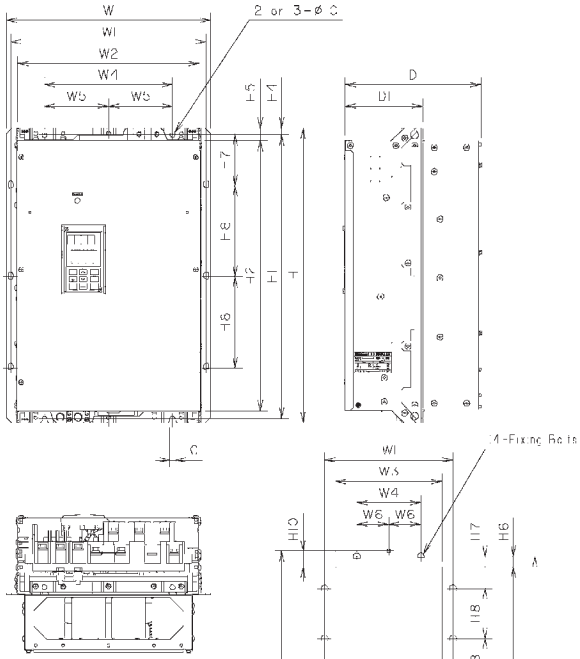

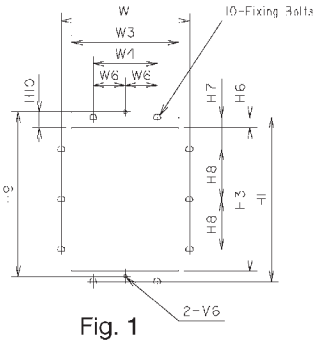

Fig. 1

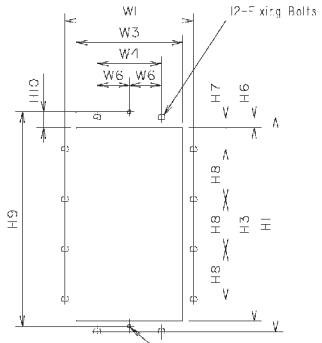

Fig. 2

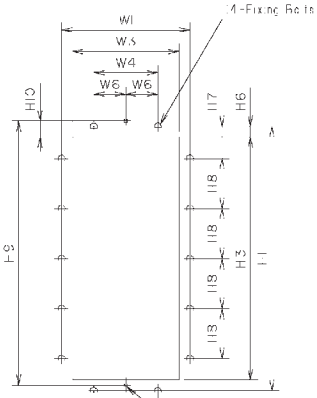

Fig. 3

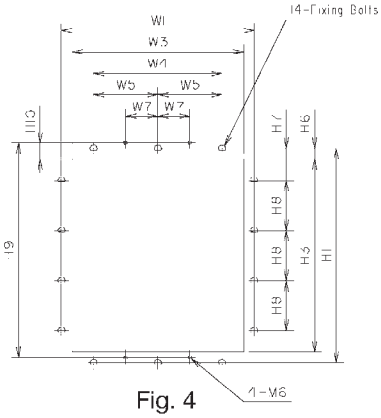

Fig. 4

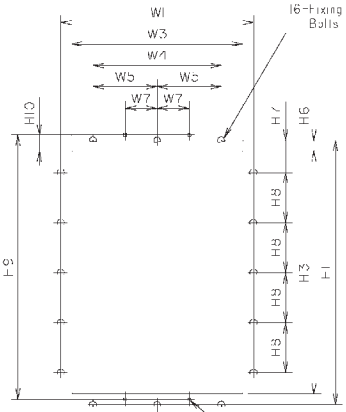

Fig. 5

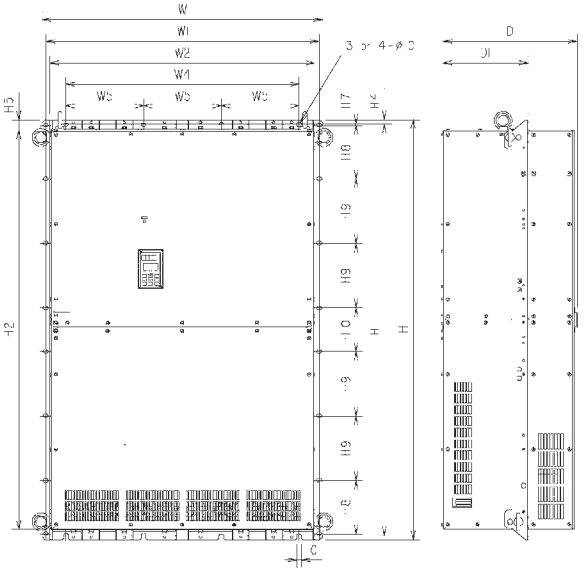

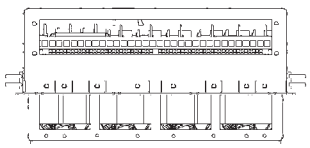

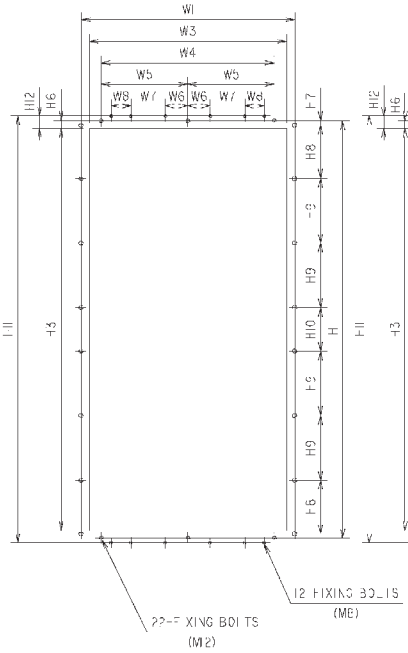

Fig. 6

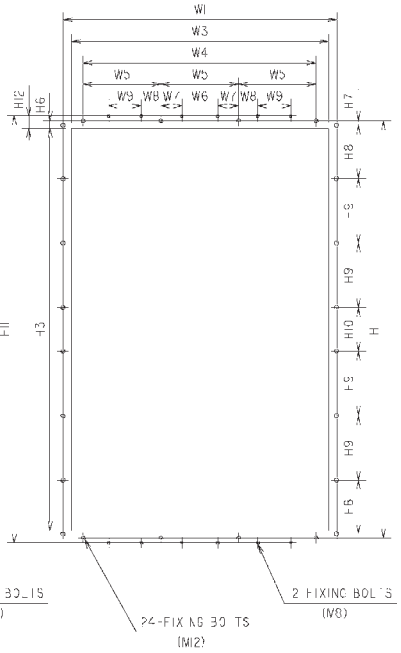

Fig. 7

GP10 230 VAC Series-Variable Torque, Constant Torque

HP	DIMENSIONS Inch(mm)																									Fixing	Wt.	Fig
	W	W1	W2	W3	W4	W5	W6	W7	W8	W9	H	H1	H2	H3	H4	H5	H6	H7	H8	H9	H10	H11	H12	C	D	D1	Bolts	Lb(kg)	
40/30	15.04	14.41	13.39	12.83	9.45		4.72				21.65	20.87	19.69	20.16				3.74		20.87					8.86			66	1
50/40	(382)	(366)	(340)	(326)	(240)		(120)				(550)	(530)	(500)	(512)				(95)		(530)					(225)			(30)	
60/50											24.21	23.43	22.24	22.72	0.47	0.98	0.35	1.67	6.69	23.43	0.43			0.4		5.71	M6	81	
	16.42	15.79	14.76	14.21	10.83		5.41				(615)	(595)	(565)	(577)	(12)	(25)	(9)	(42.5)	(170)	(595)	(11)			(10)	10.63	(145)	and	(37)	
75/60	(417)	(401)	(375)	(361)	(275)	-	(137.5)	-	-	-	29.13		27.17	27.64				4.13				-	-		(270)		M8	99	
											(740)	28.35	(690)	(702)				(105)		28.35								(45)	2
100/95												(720)								(720)								104	
																												(47)	
125/100	23.23	22.28	20.87	20.08	16.93		8.46				29.53		26.97	27.36				1.75	8.27						11.22	5.71	M6	161	
	(590)	(566)	(530)	(510)	(430)		(215)				(750)		(685)	(695)	0.61	1.28	0.49	(44.5)	(210)		0.51			0.6	(285)	(145)	and	(73)	
150/125	29.13	28.19	26.77	25.98	22.83	11.42	-	2.95			34.65	33.46	32.09	32.48	(15.5)	(32.5)	(12.5)	4.02	8.46	33.46	(13)			(15)	14.17	8.66	M12	260	4
	(740)	(716)	(680)	(660)	(580)	(290)		(75)			(880)	(850)	(815)	(825)				(102)	(215)	(850)					(360)	(220)		(118)	

GP10 460 VAC Series-Variable Torque, Constant Torque

HP	DIMENSIONS Inch(mm)																									Fixing	Wt	Fig
	W	W1	W2	W3	W4	W5	W6	W7	W8	W9	H	H1	H2	H3	H4	H5	H6	H7	H8	H9	H10	H11	H12	C	D	D1	Bolts	Lb(kg)	
40/30																									8.86			66	
50/40	15.04	14.41	13.39	12.83	9.45		4.72				21.65	20.87	19.69	20.16				3.74		20.87					(225)			(30)	1
60/50	(382)	(366)	(340)	(326)	(240)		(120)				(550)	(530)	(500)	(512)				(95)		(530)							M6	77	
															0.47	0.98	0.35		6.69		0.43			0.4		5.71	and	(35)	
75/60	16.42	15.79	14.76	14.21	10.83		5.41				26.57	25.79	24.61	25.08	(12)	(25)	(9)	2.85	(170)	25.79	(11)			(10)	10.63	(145)	M8	88	
	(417)	(401)	(375)	(361)	(275)		(137.5)				(675)	(655)	(625)	(637)				(72.5)		(655)					(270)			(40)	
100/75						-		-	-	-																		90	2
																												(41)	
125/100											29.13	28.35	27.17	27.64				4.13		28.35		-	-					108	
											(740)	(720)	(690)	(702)				(105)		(720)								(49)	
150/125											29.13	27.95	26.57	26.97				1.56	8.27	27.95					12.4	6.89		161	
200/150											(740)	(710)	(675)	(685)				(39.5)	(210)	(710)					(315)	(175)		(73)	
	23.23	22.28	20.87	20.08	16.93		8.46								0.61	1.28	0.49				0.51			0.6			M6		
250/200	(590)	(566)	(530)	(510)	(430)		(215)								(15.5)	(32.5)	(12.5)				(13)			(15)			and	229	3
300/250											39.37	38.19	36.81	37.20				2.15	8.46	38.19					14.17	8.66	M12	(104)	
350/300	29.13	28.19	26.77	25.98	22.83	11.42		2.95			(1000)	(970)	(935)	(945)				(54.5)	(215)	(970)					(360)	(220)		317	
400/350	(740)	(716)	(680)	(660)	(580)	(290)	-	(75)																				(144)	5
450/350																													
500/400	29.13	28.19	26.77	25.98	22.83	11.42	2.95	4.55	2.60																		M8	551	6
600/450	(740)	(716)	(680)	(660)	(580)	(290)	(75)	(115.5	(66)		55.12	53.94	52.36	52.76	0.61	1.38	0.57	0.18	6.99	8.46	5.71	54.37	0.81	0.59	17.72	11.22	and	(250)	
700/500	37.01	36.06	34.65	33.86	30.71	10.24	4.72	2.76	2.56	4.33	(1400)	(1370)	(1330)	(1340)	(15.5)	(35)	(14.5)	(4.5)	(177.5)	(215)	(145)	(1381)	(20.5)	(15)	(450)	(285)	M12	793	7
800/600	(940)	(916)	(880)	(860)	(780)	(260)	(120)	(70)	(65)	(110)																		(360)	

Electromagnetic Compatibility (EMC)

1. General

In accordance with the provisions described in the European Commission Guidelines Document on Council Directive 89/336/EEC, these drives are classified as “Complex Components”.

Classification as a “Complex Components” allows a product to be treated as an “apparatus”, and thus permits compliance with the essential requirements of the EMC Directive to be demonstrated to both an integrator of GP10 drives and to his customer or the installer and the user.

GP10 drive is supplied ‘CE-marked’, signifying compliance with EC Directive 89/336/EEC when fitted with specified filter units installed and earthed in accordance with this sheet.

This Specification requires the following performance criteria to be met.

EMC product standard EN61800-/13/1997

Immunity: Second environment (Industrial environment)
Emision: First environment (Domestic environment)

Finally, it is the customer’s responsibility to check whether the equipment conforms to EMC directive.

2. Recommended Installation Instructions

It is necessary that to conform to the EMC Directive, these instructions must be followed.

Follow the usual safety procedures when working with electrical equipment. All electrical connections to the filter, Drive and motor must be made by a qualified electrical technician.

1) Use the correct filter according to Table on page 6-39.
2) Install the Drive and filter in the electrically shielded metal wiring cabinet.
3) The back panel of the wiring cabinet should be prepared for the mounting dimensions of the filter. Care should be taken to remove any paint etc. from the mounting holes and face area of the panel. This will ensure the best possible grounding of the filter.
4) Use the shield cable for the control , motor and other main wiring which are connected to the Drive. These shields should be securely grounded.
5) It is important that all wire lengths are kept as short as possible and that incoming mains and outgoing motor cables are kept well separated.

“ To minimize the conducted radio disturbance in the power distribution systems, the length of the motor-cable should be as short as possible. “

6) In the case where a ferrite ring is provided with the filter, fit the ferrite ring so the conductors pass through the center of the ferrite. Wire the cable according to Fig.6 or Fig.7 , paying attention to the applied Drive type.

Applied Drive GP10

[Hp] Max. rated voltage 3 Phase 230 VAC

G11	Filter Type (Fuji model #)	Rated Current	Tested Motor Cable Length		RFI Filter Data					Note
			EN55011 Class B	EN55011 Class A	Dimensions L x W x H (mm)	Mount. Dim. Y x X (mm)	Ferrite Ring (Qty)	Total Wt. (lb)	Watt loss [W]	
0.25 0.5 1	EFL075SP2 (EFL-0.75SP-2)	6A	—	164 ft (50m)	9.57 x3.35x3.66 (243x85x93)	8.98x2.32 (228x59)	OF1 [1]	3.3	0.4 1.4 5.1	Fig. 1 Separate Type
2 3 5	EFL370SP2 (EFL-3.7SP-2)	25A			9.17x4.13x5.35 (233x105x136)	8.46x 3.15 (215x80)	OF2 [1]	5.5	3.9 8.2 21	
7.5 10	EFL750SP2 (EFL-7.5SP-2)	50A			10.75x4.72x6.22 (273x120x158)	10x3.74 (254x95)	OF2 [1]	11.0	24 40	
15 20	EFL150SP2 (EFL-15SP-2)	100A			20.2x8.07x7.6 (513x205x193)	19.17x6.30 (487x160)	OF3 [1]	44.1	42 68	
25 30	EFL220SP2 (EFL-22SP-2)	150A							74 99	
40	RF3180F11 (RF3180-F11)	180A	—	328 Ft (100m)	19.49x7.87x6.3 (495x200x160)	18.4x6.53 (468x166)	—	48.7	60	Fig. 3 Separate Type
50 60	RF3280F11 (RF3280-F11)	280A			23.11x9.84x8.07 (587x250x205)	22.05x3.35 (560x85)	—	48.7	120	Fig. 4 Separate Type
75 100 125 150	RF3400F11 (RF3400-F11)	400A					—	110	220	
[HP] Max. rated voltage 3 Phase 480 VAC										
0.5 1	EFL075G114 (EFL-0.75G11-4)	5A	33 ft (10m)	164 ft (50m)	12.6x4.56x1.65 (320x116x42)	11.54x3.54 (293x90)	—	2.0	0.8 3.1	Fig. 2 Separate/ Integral Type
2 3 5	EFL400G114 (EFL-4.0G11-4)	12A			12.6x6.1x1.77 (320x155x45)	11.54x4.13 (293x105)	—	2.6	3.1 6.9 18	
7.5 10	EFL750G114 (EFL-7.5G11-4)	35A			13.43x8.86x1.87 (341x225x47.5)	12.24x6.57 (311x167)	—	4.0	10 17 24	
15 20	EFL150G114 (EFL-15G11-4)	50A			19.69x9.84x2.76 (500x250x70)	17.68x7.28 (449x185)	—	7.9	29 49	
25 30	EFL220G114 (EFL-22G11-4)	72A					—	8.8	47 62	
40	RF3100F11 (RF3100-F11)	100A	—	328 ft (100m)	17.13x7.87x5.19 (435x200x130)	16.06x6.54 (408x166)	—	28.6	21	Fig. 3 Separate Type
50 60 75 100 125	RF3180F11 (RF3180-F11)	180A			19.49x7.87x6.3 (495x200x160)	18.4x6.53 (468x166)	—	48.7	60	
150 200	RF3280F11 (RF3280-F11)	280A			23.11x9.84x8.07 (587x250x205)	22.05x3.35 (560x85)	—	84.8	120	Fig. 4 Separate Type
250 300 350	RF3400F11 (RF3400-F11)	400A					—	110	220	
400 450	RF3880F11 (RF3880-F11)	800A			27.09x14.33x7.09 (688x364x180)	25.51x5.91 (648x150)	—	130	180	Fig. 5 Separate Type
500 600 700 800							F200 160 [3]	142	180	

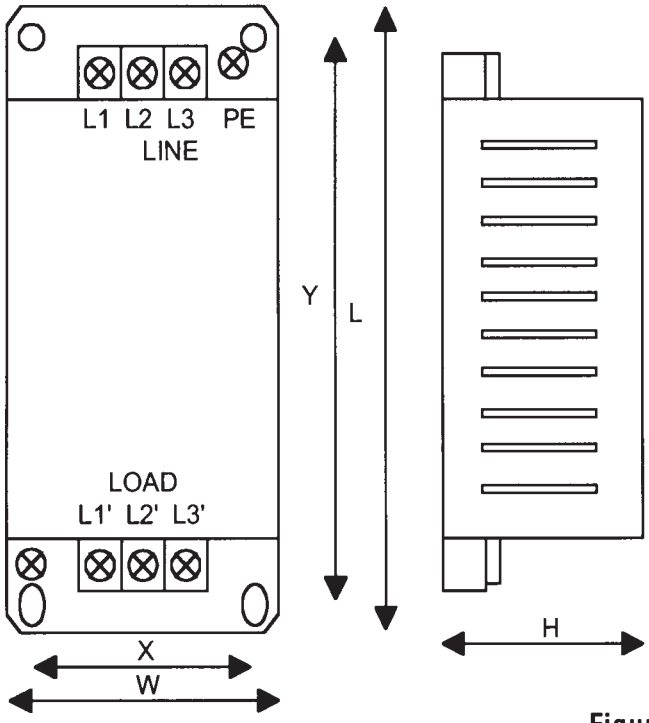

Figure 1

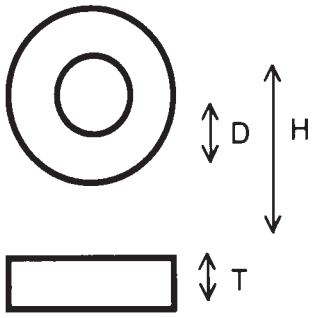

Ferrite Ring Dimensions : Inches (mm)			
Part No.	D	H	T
OF1	0.98 (25)	2.01 (51)	0.67 (17)
OF2	1.61 (41)	2.80 (71)	0.71 (18)
OF3	2.83 (72)	3.94 (100)	1.06 (27)

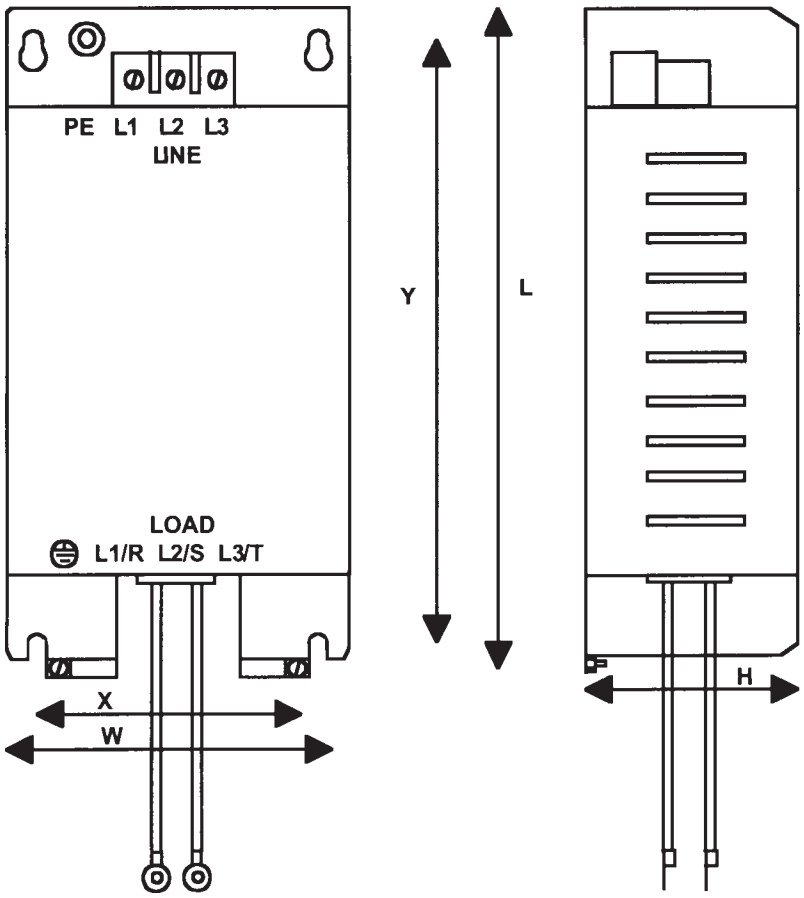

3 power cables
1 grounding cable

Figure 2

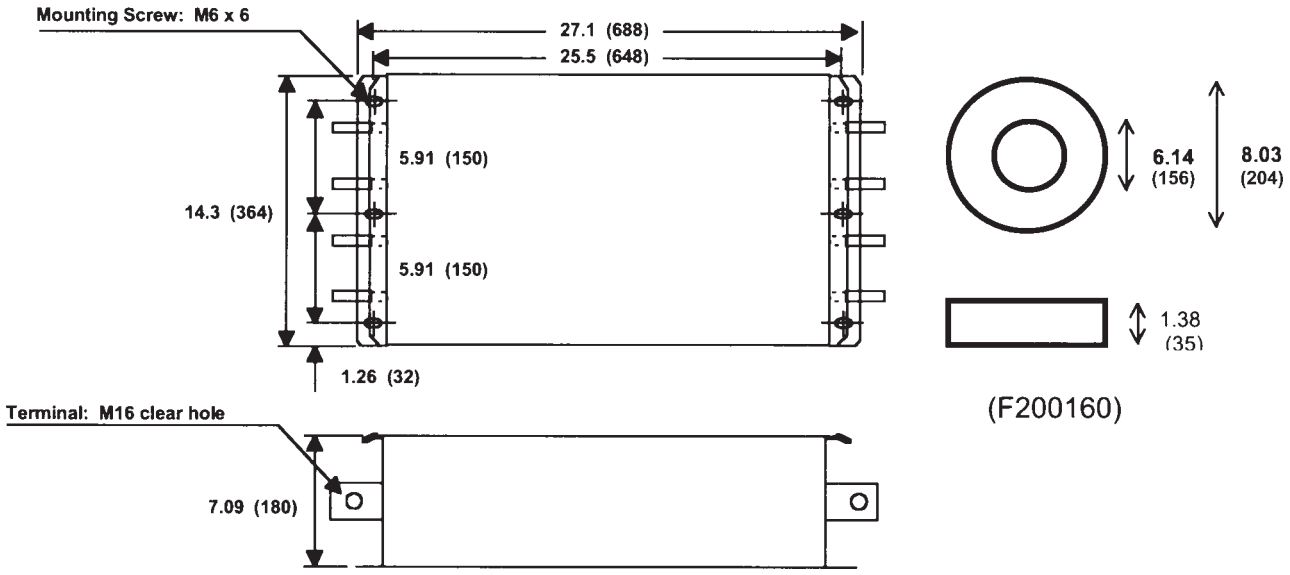

Figure 5 Outline Dimensions (RF3880-F11)

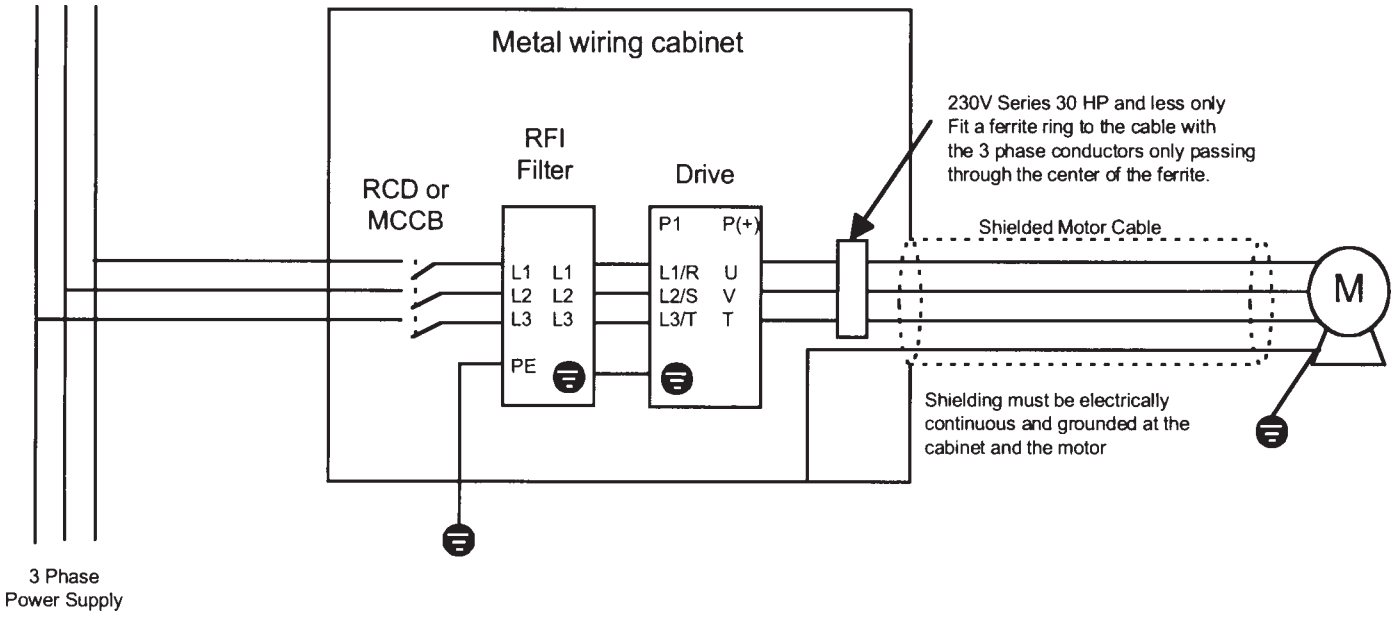

Figure 6 230V all Hp
460V less than 350 Hp

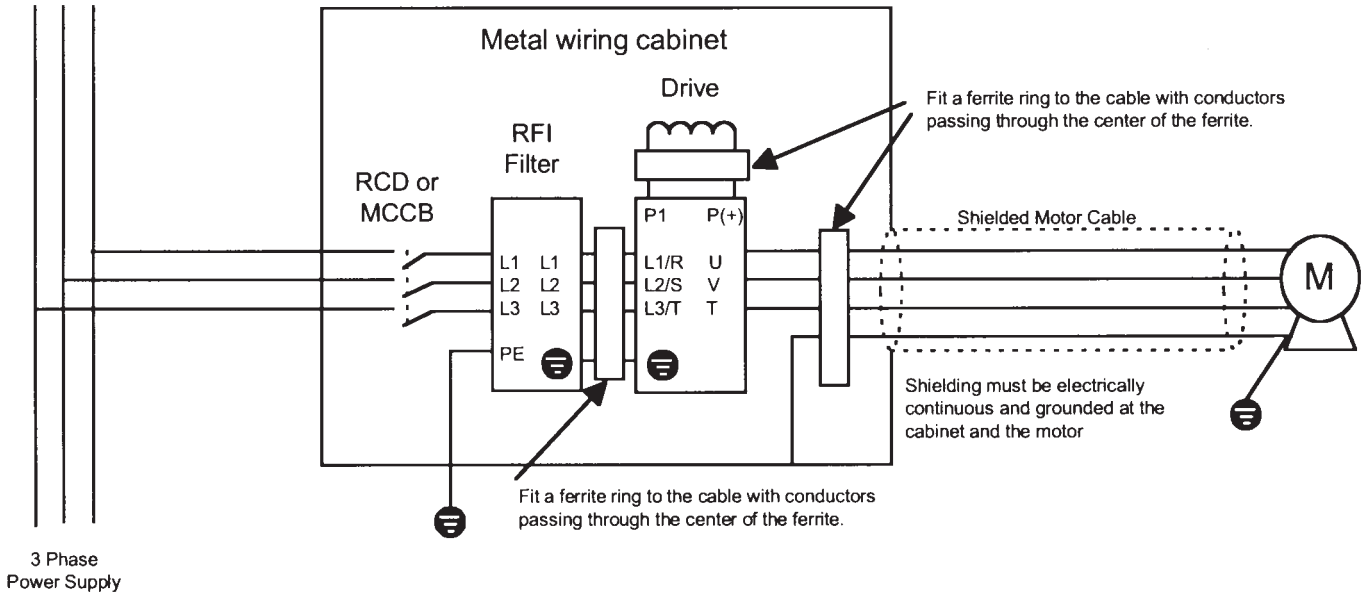

Figure 7 GP10 460V 400 Hp and higher

5580 Enterprise Parkway, Fort Myers, Florida 33905 • Telephone (941) 693-7200 • Fax (941) 693-2431

P/N: 027-GP1001TM
© 2002 Saftronics

GV2P21 Manual Starter + GV2GH7 Protector + LC1D Contactor

[+] Zoom in

GV2P21 Manual Starter + GV2GH7 Protector + LC1D Contactor, 20 HP max at 575 Vac, Thermal Setting 17 - 23 Amp, Magnetic Trip Current 327 Amp.

Options:

Image Info

Type	Photo
ID	0900892680179ad4
Characteristics	0 x 0 @ 300dpi,
Hi-res File Size	255.3 KB
Category	Product
Part Numbers	, GV2GH7, GV2P21, LC1D
Keywords	Starter, , Manual Starter, GV2, TeSys
Brands	, Telemecanique, Square D
Standards	UL, , CSA, CE, IEC
Created	04-29-2009 01:04:41
Modified	09-17-2010 11:09:11

This image is located under the following categories:

- Motor Control / Contactors and Starters-IEC Style / Manual Starters and Protectors-TeSys GV / GV2
- Motor Control / Contactors and Starters-IEC Style / Non-Reversing Contactors-TeSys D-Line / LC1D

> Terms of Use > Privacy Policy

GV2ME08 Manual Starters with LC1D Contactors

[+] Zoom in

GV2ME08 manual starters with LC1D12 and LC1D18 contactors. Fed by GV2G445 busbar and GV1G09 top feed terminal block. GV2ME08 rated for 2.5 - 4 amps motor FLA, GV2G445 rated for 63 amps maximum. LC1D12 rated for 12 amps FLA /7.5 Hp at 460v, LC1D18 rated for 18 amps FLA/10Hp at 460v.

Options:

Image Info

Type	Photo
ID	09008926801c7a36
Characteristics	0 x 0 @ 300dpi,
Hi-res File Size	66.8 KB
Category	Product Family
Part Numbers	
Keywords	bus bar, comb bus,
Brands	Square D, Telemecanique,
Standards	CE, IEC, UL,
Created	07-01-2005 01:07:16
Modified	07-31-2010 01:07:58

This image is located under the following categories:

- Motor Control / Contactors and Starters-IEC Style / Manual Starters and Protectors-TeSys GV / GV1
- Motor Control / Contactors and Starters-IEC Style / Non-Reversing Contactors-TeSys D-Line / LC1D

> Terms of Use > Privacy Policy

VARIABLE FREQUENCY DRIVE

ABB

MODEL # ACS550-U1-097A-4

ACS550

User's Manual
ACS550-01 Drives (0.75...132 kW)
ACS550-U1 Drives (1...200 hp)

ACS550 Drive Manuals

GENERAL MANUALS

ACS550-01/U1 User's Manual (0.75…132 kW) / (1…200 hp)
3AFE64804588 (3AUA0000001418) (English)

ACS550-02/U2 User's Manual (160…355 kW) / (200…550 hp)
3AFE64804626 (English)

- Safety
- Installation
- Start-up, control with I/O and ID Run
- Control panels
- Application macros
- Parameters
- Embedded fieldbus
- Fieldbus adapter
- Diagnostics
- Maintenance
- Technical data

ACS550 Technical Reference Manual
(available in electronic format only)

- Detailed Product Description
  - Technical product description including dimensional drawings
  - Cabinet mounting information including power losses
  - Software and control including complete parameter descriptions
  - User interfaces and control connections
  - Complete options descriptions
  - Spare parts
  - Etc.
- Practical Engineering Guides
  - PID & PFC engineering guides
  - Dimensioning and sizing guidelines
  - Diagnostics and maintenance information
  - Etc.

OPTION MANUALS

(delivered with optional equipment)

MFDT-01 FlashDrop User's Manual
3AFE68591074 (English)

OHDI-01 115/230 V Digital Input Module User's Manual
3AUA0000003101 (English)

OREL-01 Relay Output Extension Module User's Manual
3AUA0000001935 (English)

OTAC-01 User's Manual Pulse Encoder Interface Module User's Manual
3AUA0000001938 (English).

RCAN-01 CANopen Adapter User's Manual
3AFE64504231 (English)

RCNA-01 ControlNet Adapter User's Manual
3AFE64506005 (English)

RDNA-01 DeviceNet Adapter User's Manual
3AFE64504223 (English)

RETA-01 Ethernet Adapter User's Manual
3AFE64539736 (English)

RLON-01 LonWorks Adapter Module User's Manual
3AFE64798693 (English)

RPBA-01 PROFIBUS-DP Adapter User's Manual
3AFE64504215 (English)

Typical contents

- Safety
- Installation
- Programming/Start-up
- Diagnostics
- Technical data

MAINTENANCE MANUALS

Guide for Capacitor Reforming in ACS50/150/350/550
3AFE68735190 (EN)

The Industrial^{IT} wordmark and Product names in the form Drive^{IT} are registered or pending trademarks of ABB.

CANopen is a registered trademark of CAN in Automation e.V.

ControlNet is a registered trademark of ControlNet International.

DeviceNet is a registered trademark of Open DeviceNet Vendor Association.

DRIVECOM is a registered trademark of DRIVECOM User Organization.

Interbus is a registered trademark of Interbus Club.

LonWorks is a registered trademark of Echelon Corp.

Metasys is a registered trademark of Johnson Controls Inc.

Modbus and Modbus Plus are registered trademarks of Schneider Automation Inc.

PROFIBUS is a registered trademark of Profibus Trade Org.

PROFIBUS-DP is a registered trademark of Siemens AG.

ACS550-01/U1 Drives
0.75…132 kW
1…200 hp

User's Manual

3AFE64804588 (3AUA0000001418) Rev F
EN
EFFECTIVE: 16.04.2007
SUPERSEDES: 3AFE64804588 Rev D 24.06.2004
SUPERSEDES: 3AUA0000001418 Rev E 06.12.2004

© 2007 ABB Oy. All Rights Reserved.

Safety

Use of warnings and notes

There are two types of safety instructions throughout this manual:

- Notes draw attention to a particular condition or fact, or give information on a subject.
- Warnings caution you about conditions which can result in serious injury or death and/or damage to the equipment. They also tell you how to avoid the danger. The warning symbols are used as follows:

Dangerous voltage warning warns of high voltage which can cause physical injury and/or damage to the equipment.

General warning warns about conditions, other than those caused by electricity, which can result in physical injury and/or damage to the equipment.

WARNING! The ACS550 adjustable speed AC drive should ONLY be installed by a qualified electrician.

WARNING! Even when the motor is stopped, dangerous voltage is present at the power circuit terminals U1, V1, W1 and U2, V2, W2 and, depending on the frame size, UDC+ and UDC-, or BRK+ and BRK-.

WARNING! Dangerous voltage is present when input power is connected. After disconnecting the supply, wait at least 5 minutes (to let the intermediate circuit capacitors discharge) before removing the cover.

WARNING! Even when power is switched off from the input terminals of the ACS550, there may be dangerous voltage (from external sources) on the terminals of the relay outputs RO1...RO3.

WARNING! When the control terminals of two or more drives are connected in parallel, the auxiliary voltage for these control connections must be taken from a single source which can either be one of the drives or an external supply.

WARNING! If a drive whose internal EMC filter is not disconnected is installed on an IT system [an ungrounded power system or a high resistance-grounded (over 30 ohm) power system], the system will be connected to earth potential through the EMC filter capacitors of the drive. This may cause danger or damage the drive.

If a drive whose internal EMC filter is not disconnected is installed on a corner grounded TN system, the drive will be damaged.

Disconnect the internal EMC filter by removing EM1 and EM3 screws (frame size R1...R4, see the diagram in section *Power connection diagrams* on page *20*) or F1 and F2 screws (frame size R5 or R6, see the diagram on page *21*). Also see sections *IT systems* on page *268* and *Corner grounded TN systems* on page *267*.

WARNING! Do not attempt to install or remove EM1, EM3, F1 or F2 screws while power is applied to the drive's input terminals**.**

WARNING! Do not control the motor with the disconnecting device (disconnecting means); instead, use the control panel start and stop keys and , or commands via the I/O board of the drive. The maximum allowed number of charging cycles of the DC capacitors (i.e. power-ups by applying power) is six in ten minutes.

WARNING! The ACS550-01/U1 is not field repairable. Never attempt to repair a malfunctioning drive; contact the factory or your local Authorized Service Center for replacement.

WARNING! The ACS550 will start up automatically after an input voltage interruption if the external run command is on.

WARNING! The heat sink may reach a high temperature. See chapter *Technical data* on page *259*.

Note: For more technical information, contact the factory or your local ABB representative.

Table of contents

Safety
Use of warnings and notes 5

Table of contents

Installation
Installation flow chart 11
Preparing for installation 12
Installing the drive 16

Start-up, control with I/O and ID Run
How to start up the drive 31
How to control the drive through the I/O interface 38
How to perform the ID Run 39

Control panels
About control panels 41
Compatibility 41
Assistant Control Panel 42
Basic Control Panel 62

Application macros
ABB Standard macro 72
3-wire macro 73
Alternate macro 74
Motor Potentiometer macro 75
Hand-Auto macro 76
PID Control macro 77
PFC macro 78
Torque Control macro 79
Connection example of a two-wire sensor 80
User parameter sets 81
Macro default values for parameters 82

Parameters
Complete parameter list 85
Complete parameter descriptions 98

Embedded fieldbus
Overview 189
Planning 190
Mechanical and electrical installation – EFB 190
Communication set-up – EFB 191
Activate drive control functions – EFB 193

Feedback from the drive – EFB 197
Diagnostics – EFB 198
Modbus protocol technical data 201
ABB control profiles technical data 209

Fieldbus adapter

Overview 221
Planning 223
Mechanical and electrical installation – FBA 224
Communication set-up – FBA 225
Activate drive control functions – FBA 225
Feedback from the drive – FBA 228
Diagnostics – FBA 229
ABB Drives profile technical data 232
Generic profile technical data 240

Diagnostics

Diagnostic displays 243
Correcting faults 244
Correcting alarms 250

Maintenance

Maintenance intervals 255
Heatsink 255
Main fan replacement 256
Internal enclosure fan replacement 257
Capacitors 258
Control panel 258

Technical data

Ratings 259
Input power connections 263
Motor connections 271
Brake components 277
Control connections 281
Efficiency 282
Cooling 283
Dimensions and weights 286
Degrees of protection 289
Ambient conditions 289
Materials 290
Applicable standards 291
CE marking 291
C-Tick marking 291
UL/CSA markings 292
IEC/EN 61800-3 (2004) Definitions 292
Compliance with the IEC/EN 61800-3 (2004) 293
Liability limits 294
Product protection in the USA 295

Index

Contact ABB

Product and service inquiries 309
Product training 309
Providing feedback on ABB Drives manuals 309

Installation

Study these installation instructions carefully before proceeding. **Failure to observe the warnings and instructions may cause a malfunction or personal hazard.**

WARNING! Before you begin read chapter *Safety* on page *5*.

Note: The installation must always be designed and made according to applicable local laws and regulations. ABB does not assume any liability whatsoever for any installation which breaches the local laws and/or other regulations. Furthermore, if the recommendations given by ABB are not followed, the drive may experience problems that the warranty does not cover.

Installation flow chart

The installation of the ACS550 adjustable speed AC drive follows the outline below. The steps must be carried out in the order shown. At the right of each step are references to the detailed information needed for the correct installation of the drive.

Task	See
PREPARE for installation	*Preparing for installation* on page *12*
PREPARE the mounting location	*Prepare the mounting location* on page *16*
REMOVE the front cover	*Remove the front cover* on page *16*
MOUNT the drive	*Mount the drive* on page *17*
INSTALL wiring	*Wiring overview* on page *18* and *Install the wiring* on page *24*
CHECK installation	*Check installation* on page *29*
REINSTALL the cover	*Reinstall the cover* on page *30*
START-UP	*How to start up the drive* on page *31*

Preparing for installation

Lifting the drive

Lift the drive only by the metal chassis.

Unpacking the drive

1. Unpack the drive.
2. Check for any damage and notify the shipper immediately if damaged components are found.
3. Check the contents against the order and the shipping label to verify that all parts have been received.

Drive identification

Drive labels

To determine the type of drive you are installing, refer to either:

- serial number label attached on upper part of the chokeplate between the mounting holes, or

- type code label attached on the heat sink – on the right side of the drive cover. Two examples of the type code label are given below.

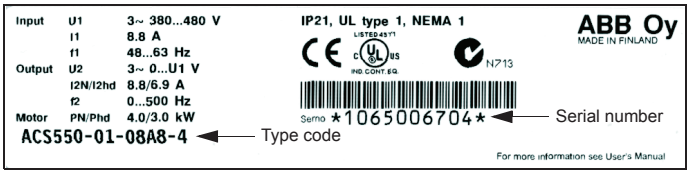

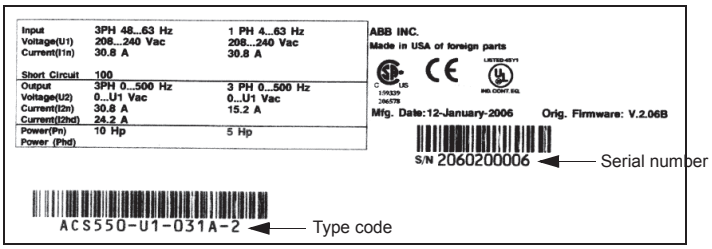

Type code

Use the following chart to interpret the type code found on both the type code and the serial number label.

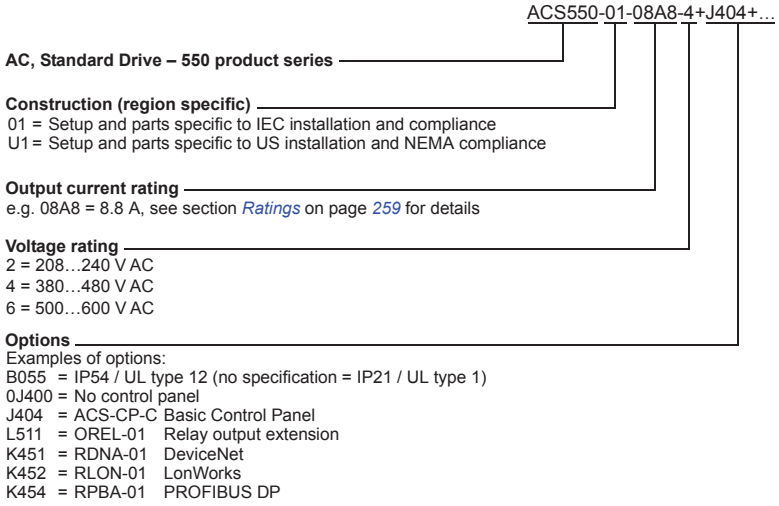

Ratings and frame size

The chart in section *Ratings* on page *259* lists technical specifications and identifies the drive's frame size – significant, since some instructions in this document vary, depending on the drive's frame size. To read the ratings table, you need the "Output current rating" entry from the type code. Also, when using the ratings table, note that the table is broken into sections based on the drive's "Voltage rating".

Serial number

The format of the drive serial number shown on the labels is described below.

Serial number is of format CYYWWXXXXX, where

C:	Country of manufacture
YY:	Year of manufacture
WW:	Week of manufacture; 01, 02, 03, … for week 1, week 2, week 3, …
XXXXX:	Integer starting every week from 0001.

Motor compatibility

The motor, drive and supply power must be compatible:

Motor specification	Verify	Reference
Motor type	3-phase induction motor	–
Nominal current	Motor value is within this range: 0.2…2.0 · I_{2hd} (I_{2hd} = drive heavy duty current)	• Type code label on drive, entry for Output I_{2hd}, or • Type code on drive and rating table in chapter *Technical data* on page *259*.
Nominal frequency	10…500 Hz	–
Voltage range	Motor is compatible with the ACS550 voltage range.	208…240 V (for ACS550-X1-XXXX-2) or 380…480 V (for ACS550-X1-XXXX-4) or 500…600 V (for ACS550-U1-XXXX-6)
Insulation	500…600 V drives: Either the motor complies with NEMA MG1 Part 31, or a du/dt filter is used between the motor and drive.	For ACS550-U1-XXXX-6

Tools required

To install the ACS550 you need the following:

- screwdrivers (as appropriate for the mounting hardware used)
- wire stripper
- tape measure
- drill
- for installations involving ACS550-U1, frame sizes R5 or R6 and IP54 / UL type 12 enclosures: punch for creating conduit mounting holes
- for installations involving ACS550-U1, frame size R6: appropriate crimping tool for power cable lugs. See section *Power terminal considerations – R6 frame size* on page *269*.
- mounting hardware: screws or nuts and bolts, four each. The type of hardware depends on the mounting surface and the frame size:

Frame size	Mounting hardware	
R1…R4	M5	#10
R5	M6	1/4 in
R6	M8	5/16 in

Suitable environment and enclosure

Confirm that the site meets the environmental requirements. To prevent damage prior to installation, store and transport the drive according to the environmental requirements specified for storage and transportation. See section *Ambient conditions* on page *289*.

Confirm that the enclosure is appropriate, based on the site contamination level:

- IP21 / UL type 1 enclosure: The site must be free of airborne dust, corrosive gases or liquids, and conductive contaminants such as dripping water, condensation, carbon dust and metallic particles.
- IP54 / UL type 12 enclosure: This enclosure provides protection from airborne dust and light sprays or splashing water from all directions.
- If, for some reason, an IP21 drive needs to be installed without the conduit box or cover, or an IP54 drive without the conduit plate or hood, see the note in chapter *Technical data*, page *292*.

Suitable mounting location

Confirm that the mounting location meets the following constraints:

- The drive must be mounted vertically on a smooth, solid surface, and in a suitable environment as defined above.
- The minimum space requirements for the drive are the outside dimensions (see section *Outside dimensions* on page *287*), plus air flow space around the drive (see section *Cooling* on page *283*).
- The distance between the motor and the drive is limited by the maximum motor cable length. See section *Motor connection specifications* on page *271*.
- The mounting site must support the drive's modest weight. See section *Weight* on page *288*.

Installing the drive

WARNING! Before installing the ACS550, ensure the input power supply to the drive is off.

Prepare the mounting location

The ACS550 should only be mounted where all of the requirements defined in section *Preparing for installation* on page *12* are met.

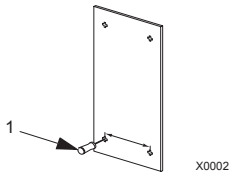

1. Mark the position of the mounting holes with the help of the mounting template provided with the drive.
2. Drill the holes.

Note: Frame sizes R3 and R4 have four holes along the top. Use only two. If possible, use the two outside holes (to allow room to remove the fan for maintenance).

Note: ACS400 drives can be replaced using the original mounting holes. For R1 and R2 frame sizes, the mounting holes are identical. For R3 and R4 frame sizes, the inside mounting holes on the top of ACS550 drives match ACS400 mounts.

Remove the front cover

IP21 / UL type 1

1. Remove the control panel, if attached.
2. Loosen the captive screw at the top.
3. Pull near the top to remove the cover.

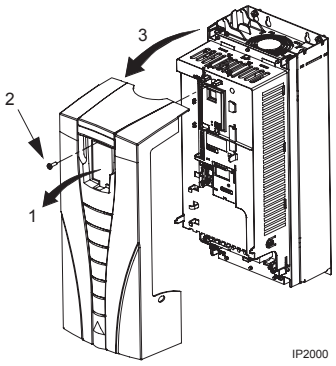

IP54 / UL type 12

1. If hood is present: Remove screws (2) holding hood in place.
2. If hood is present: Slide hood up and off of the cover.
3. Loosen the captive screws around the edge of the cover.
4. Remove the cover.

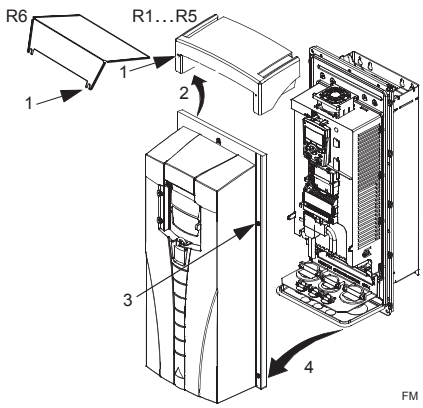

Mount the drive

IP21 / UL type 1

1. Position the ACS550 onto the mounting screws or bolts and securely tighten in all four corners.

   Note: Lift the ACS550 by its metal chassis (frame size R6 by the lifting holes on both sides at the top).

2. Non-English speaking locations: Add a warning sticker in the appropriate language over the existing warning on the top of the module.

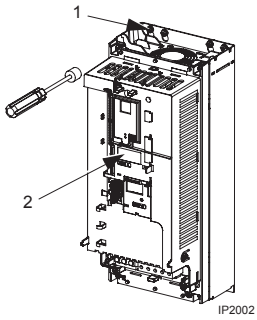

IP54 / UL type 12

For the IP54 / UL type 12 enclosures, rubber plugs are required in the holes provided for access to the drive mounting slots.

1. As required for access, remove the rubber plugs. Push plugs out from the back of the drive.
2. R5 & R6: Align the sheet metal hood (not shown) in front of the drive's top mounting holes. (Attach as part of next step.)
3. Position the ACS550 onto the mounting screws or bolts and securely tighten in all four corners.

   Note: Lift the ACS550 by its metal chassis (frame size R6 by the lifting holes on both sides at the top).

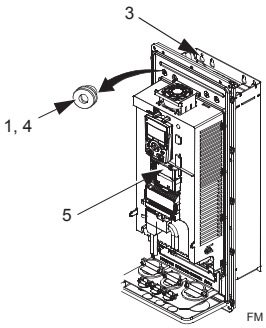

4. Reinstall the rubber plugs.
5. Non-English speaking locations: Add a warning sticker in the appropriate language over the existing warning on the top of the module.

Wiring overview

Conduit/Gland kit

Wiring drives with the IP21 / UL type 1 enclosure requires a conduit/gland kit with the following items:

- conduit/gland box
- five (5) cable clamps (ACS550-01 only)
- screws
- cover.

The kit is included with IP21 / UL type 1 enclosures.

Wiring requirements

WARNING! Ensure the motor is compatible for use with the ACS550. The drive must be installed by a competent person in accordance with the considerations defined in section *Preparing for installation* on page *12*. If in doubt, contact your local ABB sales or service office.

As you install the wiring, observe the following:

- There are four sets of wiring instructions – one set for each combination of drive enclosure type (IP21 / UL type and IP54 / UL type 12) and wiring type (conduit or cable). Be sure to select the appropriate procedure.
- Determine electro-magnetic compliance (EMC) requirements per local codes. See section *Motor cable requirements for CE & C-Tick compliance* on page *274*. In general:
  - Follow local codes for cable size.
  - Keep these four classes of wiring separated: input power wiring, motor wiring, control/communications wiring and braking unit wiring.
- When installing input power and motor wiring, refer to the following, as appropriate:

Terminal	Description	Specifications and notes
U1, V1, W1[1]	3-phase power supply input	*Input power connections* on page *263*
PE	Protective Ground	*Ground connections* on page *266*
U2, V2, W2	Power output to motor	*Motor connections* on page *271*

[1] The ACS550 -x1-xxxx-2 (208…240 V series) can be used with a single phase supply, if output current is derated by 50%. For single phase supply voltage, connect power at U1 and W1.

- To locate input power and motor connection terminals, see section *Power connection diagrams* on page *20*. For specifications on power terminals, see section *Drive's power connection terminals* on page *268*.
- For corner grounded TN systems, see section *Corner grounded TN systems* on page *267*.
- For IT systems, see section *IT systems* on page *268*.

- For frame size R6, see section *Power terminal considerations – R6 frame size* on page *269* to install the appropriate cable lugs.
- For drives using braking (optional), refer to the following, as appropriate:

Frame size	Terminal	Description	Braking accessory
R1, R2	BRK+, BRK-	Braking resistor	Braking resistor. See section *Brake components* on page *277*.
R3, R4, R5, R6	UDC+, UDC-	DC bus	Contact your ABB representative to order either: • braking unit or • chopper and resistor

- When installing control wiring, refer to the following chapters or sections, as appropriate:
  - *Control terminals table* on page *22*
  - *Control connections* on page *281*
  - *Application macros* on page *71*
  - *Complete parameter descriptions* on page *98*
  - *Embedded fieldbus* on page *189*
  - *Fieldbus adapter* on page *221*.

Power connection diagrams

The following diagram shows the terminal layout for frame size R3, which, in general, applies to frame sizes R1...R6, except for the R5/R6 power and ground terminals.

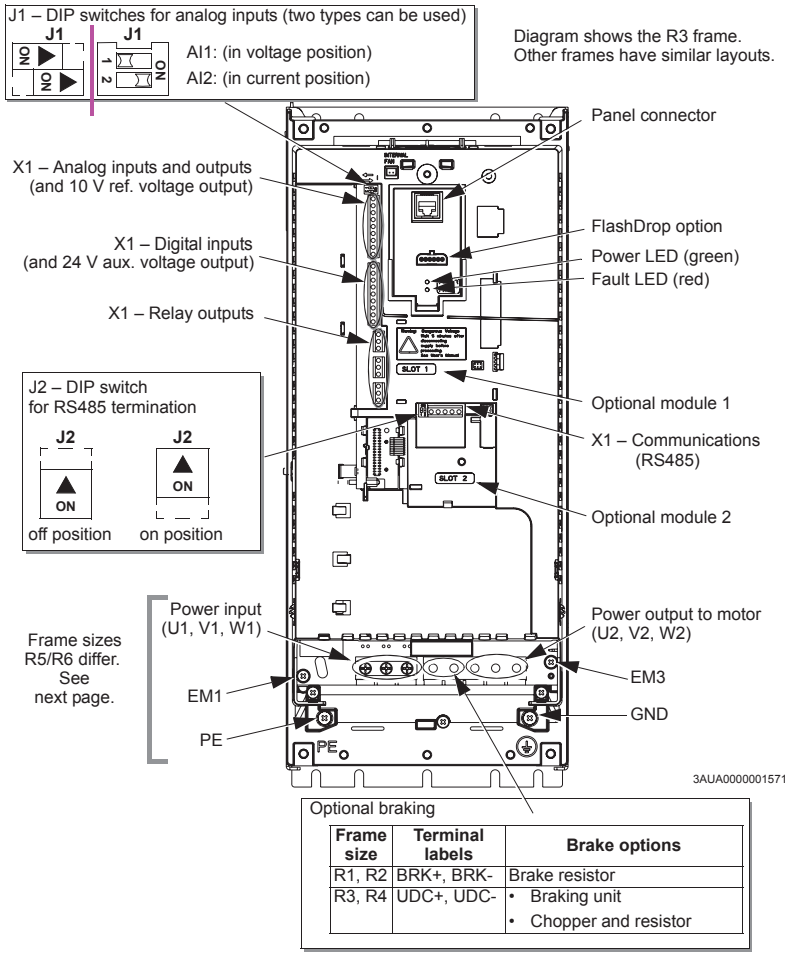

WARNING! For IT systems and corner grounded TN systems, disconnect the internal EMC filter by removing:
- On ACS550-01: screws EM1 and EM3
- On ACS550-U1: screw EM1 (drive is shipped with EM3 already removed).

See *IT systems* on page *268* and *Corner grounded TN systems* on page *267*.

The following diagram shows the power and ground terminal layout for frame sizes R5 and R6

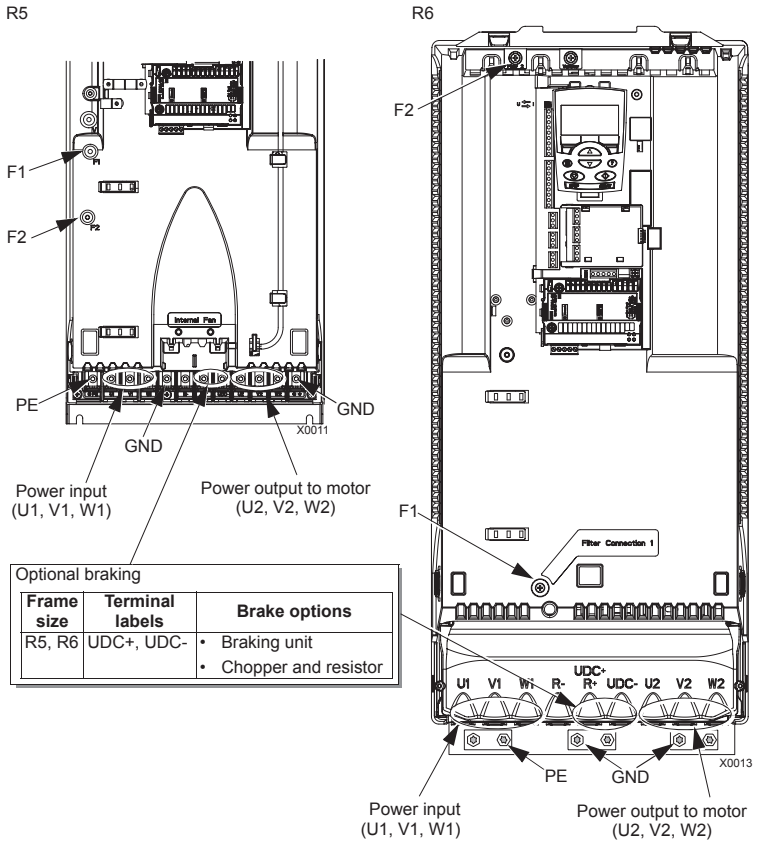

Optional braking

Frame size	Terminal labels	Brake options
R5, R6	UDC+, UDC-	• Braking unit • Chopper and resistor

WARNING! For IT systems and corner grounded TN systems, disconnect the internal EMC filter by removing screws F1 and F2.
See *IT systems* on page *268* and *Corner grounded TN systems* on page *267*.

Control terminals table

The following provides information for connecting control wiring at X1 on the drive.

	X1		Hardware description
Analog I/O	1	SCR	Terminal for signal cable screen. (Connected internally to chassis ground.)
	2	AI1	Analog input channel 1, programmable. Default[2] = frequency reference. Resolution 0.1%, accuracy ±1%.
			Two different DIP switch types can be used.
			J1: AI1 OFF: 0…10 V (R_i = 312 kohm) 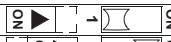
			J1: AI1 ON: 0…20 mA (R_i = 100 ohm) 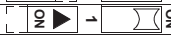
	3	AGND	Analog input circuit common (connected internally to chassis gnd. through 1 Mohm).
	4	+10 V	Potentiometer reference source: 10 V ±2%, max. 10 mA (1 kohm ≤ R ≤ 10 kohm).
	5	AI2	Analog input channel 2, programmable. Default[2] = not used. Resolution 0.1%, accuracy ±1%.
			Two different DIP switch types can be used.
			J1: AI2 OFF: 0…10 V (R_i = 312 kohm) 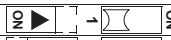
			J1: AI2 ON: 0…20 mA (R_i = 100 ohm) 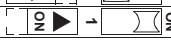
	6	AGND	Analog input circuit common (connected internally to chassis gnd. through 1 Mohm).
	7	AO1	Analog output, programmable. Default[2] = frequency. 0…20 mA (load < 500 ohm). Accuracy ±3%.
	8	AO2	Analog output, programmable. Default[2] = current. 0…20 mA (load < 500 ohm). Accuracy ±3%.
	9	AGND	Analog output circuit common (connected internally to chassis gnd. through 1 Mohm).
Digital inputs[1]	10	+24V	Auxiliary voltage output 24 V DC / 250 mA (reference to GND), short circuit protected.
	11	GND	Auxiliary voltage output common (connected internally as floating).
	12	DCOM	Digital input common. To activate a digital input, there must be ≥ +10 V (or ≤ -10 V) between that input and DCOM. The 24 V may be provided by the ACS550 (X1-10) or by an external 12…24 V source of either polarity.
	13	DI1	Digital input 1, programmable. Default[2] = start/stop.
	14	DI2	Digital input 2, programmable. Default[2] = fwd/rev.
	15	DI3	Digital input 3, programmable. Default[2] = constant speed sel (code).
	16	DI4	Digital input 4, programmable. Default[2] = constant speed sel (code).
	17	DI5	Digital input 5, programmable. Default[2] = ramp pair selection (code).
	18	DI6	Digital input 6, programmable. Default[2] = not used.

	X1		Hardware description
Relay outputs	19	RO1C	Relay output 1, programmable. Default[2] = Ready Maximum: 250 V AC / 30 V DC, 2 A Minimum: 500 mW (12 V, 10 mA)
	20	RO1A	
	21	RO1B	
	22	RO2C	Relay output 2, programmable. Default[2] = Running Maximum: 250 V AC / 30 V DC, 2 A Minimum: 500 mW (12 V, 10 mA)
	23	RO2A	
	24	RO2B	
	25	RO3C	Relay output 3, programmable. Default[2] = Fault (-1) Maximum: 250 V AC / 30 V DC, 2 A Minimum: 500 mW (12 V, 10 mA)
	26	RO3A	
	27	RO3B	

[1] Digital input impedance 1.5 kohm Maximum voltage for digital inputs is 30 V.

[2] Default values depend on the macro used. Values specified are for the default macro. See chapter *Application macros* on page *71*.

Note: Terminals 3, 6 and 9 are at the same potential.

Note: For safety reasons the fault relay signals a "fault" when the ACS550 is powered down.

WARNING! All ELV (Extra Low Voltage) circuits connected to the drive must be used within a zone of equipotential bonding, i.e. within a zone where all simultaneously accessible conductive parts are electrically connected to prevent hazardous voltages appearing between them. This is accomplished by a proper factory grounding.

The terminals on the control board as well as on the optional modules attachable to the board fulfil the Protective Extra Low Voltage (PELV) requirements stated in EN 50178, provided that the external circuits connected to the terminals also fulfil the requirements and the installation site is below 2000 m (6562 ft)

You can wire the digital input terminals in either a PNP or NPN configuration.

PNP connection (source)

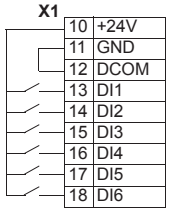

NPN connection (sink)

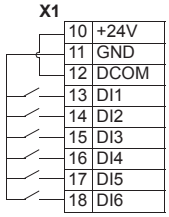

Install the wiring

Checking motor and motor cable insulation

WARNING! Check the motor and motor cable insulation before connecting the drive to input power. For this test, make sure that motor cables are NOT connected to the drive.

1. Complete motor cable connections to the motor, but NOT to the drive output terminals (U2, V2, W2).
2. At the drive end of the motor cable, measure the insulation resistance between each motor cable phase and Protective Earth (PE): Apply a voltage of 1 kV DC and verify that resistance is greater than 1 Mohm.

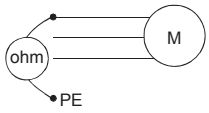

*Wiring **IP21** / UL type 1 enclosure with **cables***

1. Open the appropriate knockouts in the conduit/gland box. (See section *Conduit/Gland kit* on page *18*.)
2. Install the cable clamps for the power/motor cables.

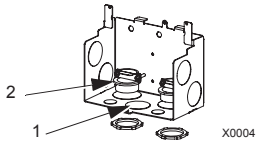

3. On the input power cable, strip the sheathing back far enough to route individual wires.
4. On the motor cable, strip the sheathing back far enough to expose the copper wire screen so that the screen can be twisted into a pig-tail. Keep the pig-tail short to minimize noise radiation.

   360° grounding under the clamp is recommended for the motor cable to minimize noise radiation. In this case, remove the sheathing at the cable clamp.

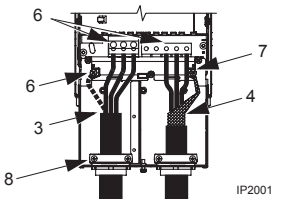

5. Route both cables through the clamps.
6. Strip and connect the power/motor wires and the power ground wire to the drive terminals.

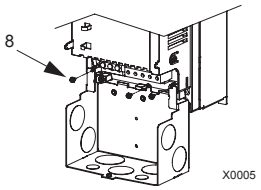

Note: For R5 frame size, the minimum power cable size is 25 mm^2 (4 AWG).
For R6 frame size, refer to section *Power terminal considerations – R6 frame size* on page *269*.

7. Connect the pig-tail created from the motor cable screen to the GND terminal.
8. Install conduit/gland box and tighten the cable clamps.
9. Install the cable clamp(s) for the control cable(s). (Power/motor cables and clamps not shown in the figure.)

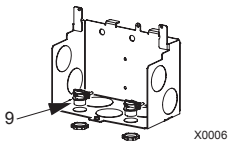

10. Strip control cable sheathing and twist the copper screen into a pig-tail.
11. Route control cable(s) through clamp(s) and tighten clamp(s).
12. Connect the ground screen pig-tail for digital and analog I/O cables at X1-1. (Ground only at drive end.)
13. Connect the ground screen pig-tail for RS485 cables at X1-28 or X1-32. (Ground only at drive end.)
14. Strip and connect the individual control wires to the drive terminals. See section *Control terminals table* on page *22*.
15. Install the conduit/gland box cover (1 screw).

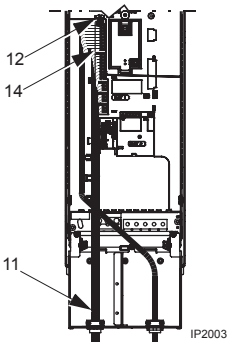

*Wiring **IP21** / UL type 1 enclosure with **conduit***

1. Open the appropriate knockouts in the conduit/gland box. (See section *Conduit/Gland kit* on page *18*.)
2. Install thin-wall conduit clamps (not supplied).

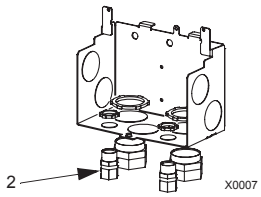

3. Install conduit/gland box.
4. Connect conduit runs to box.

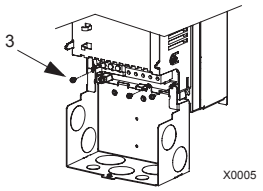

5. Route input power and motor wiring through conduits (must be separate conduit runs).
6. Strip wires.
7. Connect power, motor and ground wires to the drive terminals.

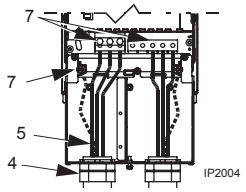

Note: For R5 frame size, the minimum power cable size is 25 mm^2 (4 AWG).
For R6 frame size, refer to section *Power terminal considerations – R6 frame size* on page *269*.

8. Route the control cable through the conduit (must be separate from input power and motor conduit runs).
9. Strip the control cable sheathing and twist the copper screen into a pig-tail.
10. Connect the ground screen pig-tail for digital and analog I/O cables at X1-1. (Ground only at drive end.)
11. Connect the ground screen pig-tail for RS485 cables at X1-28 or X1-32. (Ground only at drive end.)
12. Strip and connect the individual control wires to the drive terminals. See section *Control terminals table* on page *22*.
13. Install the conduit/gland box cover (1 screw).

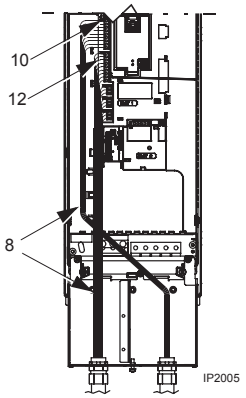

*Wiring **IP54** / UL type 12 enclosure with **cables***

1. Cut the cable seals as needed for the power, motor and control cables. (The cable seals are cone-shaped, rubber seals on the bottom of the drive.)

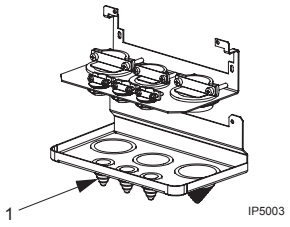

2. On the input power cable, strip the sheathing back far enough to route individual wires.
3. On the motor cable, strip the sheathing back far enough to expose the copper wire screen so that the screen can be twisted into a pig-tail. Keep the pig-tail short to minimize noise radiation.

   360° grounding under the clamp is recommended for the motor cable to minimize noise radiation. In this case, remove the sheathing at the cable clamp.

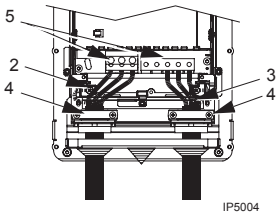

4. Route both cables through the clamps and tighten the clamps.
5. Strip and connect the power/motor wires and the power ground wire to the drive terminals.

Note: For R5 frame size, the minimum power cable size is 25 mm^2 (4 AWG). For R6 frame size, refer to section *Power terminal considerations – R6 frame size* on page *269*.

---

6. Connect the pig-tail created from the motor cable screen to the GND terminal.
7. Strip control cable sheathing and twist the copper screen into a pig-tail.
8. Route control cable(s) through clamp(s) and tighten clamp(s).
9. Connect the ground screen pig-tail for digital and analog I/O cables at X1-1. (Ground only at drive end.)
10. Connect the ground screen pig-tail for RS485 cables at X1-28 or X1-32. (Ground only at drive end.)
11. Strip and connect the individual control wires to the drive terminals. See section *Control terminals table* on page *22*.

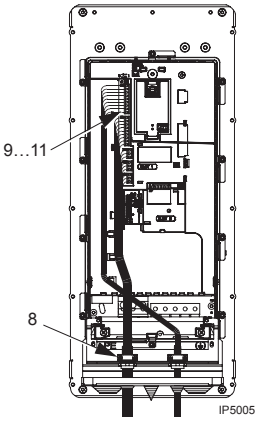

*Wiring **IP54** / UL type 12 enclosure with **conduit***

1. Depends on frame size:
   - R1…R4: Remove and discard the cable seals where conduit will be installed. (The cable seals are cone-shaped, rubber seals on the bottom of the drive.)
   - R5 and R6: Use punch to create holes for conduit connections as needed.

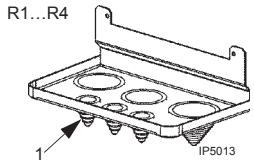

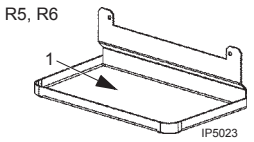

2. For each conduit run, install water tight conduit connectors (not supplied).

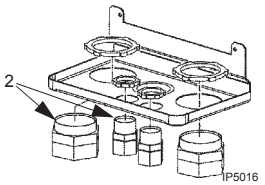

3. Route the power wiring through the conduit.
4. Route the motor wiring through the conduit.
5. Strip the wires.
6. Connect the power, motor and ground wires to the drive terminals.

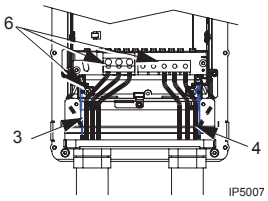

Note: For R5 frame size, the minimum power cable size is 25 mm^2 (4 AWG).
For R6 frame size, refer to section *Power terminal considerations – R6 frame size* on page *269*.

7. Route the control cable through the conduit.
8. Strip the control cable sheathing and twist the copper screen into a pig-tail.
9. Connect the ground screen pig-tail for digital and analog I/O cables at X1-1. (Ground only at drive end.)
10. Connect the ground screen pig-tail for RS485 cables at X1-28 or X1-32. (Ground only at drive end.)
11. Strip and connect the individual control wires to the drive terminals. See section *Control terminals table* on page *22*.

Check installation

Before applying power, perform the following checks.

✓	Check
	Installation environment conforms to the drive's specifications for ambient conditions.
	The drive is mounted securely.
	Space around the drive meets the drive's specifications for cooling.
	The motor and driven equipment are ready for start.
	For IT systems and corner grounded TN systems: The internal EMC filter is disconnected (screws EM1 & EM3 or F1 & F2 removed).
	The drive is properly grounded.
	The input power (mains) voltage matches the drive nominal input voltage.
	The input power (mains) connections at U1, V1 and W1 are connected and tightened as specified.
	The input power (mains) fuses are installed.
	The motor connections at U2, V2 and W2 are connected and tightened as specified.
	The motor cable is routed away from other cables.
	NO power factor compensation capacitors are in the motor cable.
	The control connections are connected and tightened as specified.
	NO tools or foreign objects (such as drill shavings) are inside the drive.
	NO alternate power source for the motor (such as a bypass connection) is connected – no voltage is applied to the output of the drive.

Reinstall the cover

IP21 / UL type 1

1. Align the cover and slide it on.
2. Tighten the captive screw.
3. Reinstall the control panel.
4. Continue with start-up. See chapter *Start-up, control with I/O and ID Run* on page *31*.

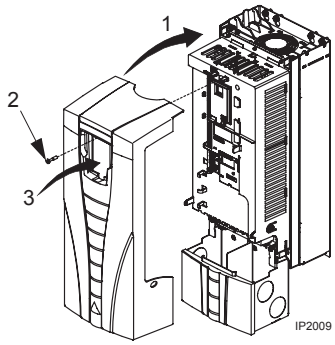

IP54 / UL type 12

1. Align the cover and slide it on.
2. Tighten the captive screws around the edge of the cover.
3. Slide the hood down over the top of the cover. (Only needed for UL type 12 installations.)
4. Install the two screws that attach the hood. (Only needed for UL type 12 installations.)
5. Install the control panel.

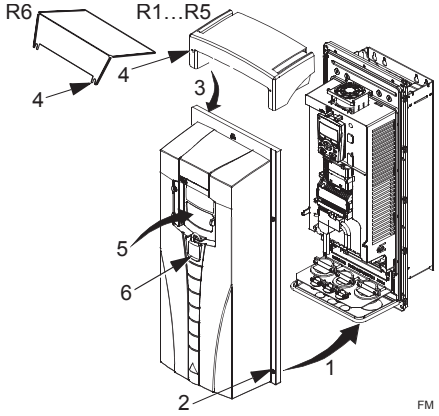

Note: The control panel window must be closed to comply with IP54 / UL type 12.

6. Optional: Add a lock (not supplied) to secure the control panel window.
7. Continue with start-up. See chapter *Start-up, control with I/O and ID Run* on page *31*.

Start-up, control with I/O and ID Run

The chapter instructs how to:

- perform the start-up
- start, stop, change the direction of rotation and adjust the speed of the motor through the I/O interface
- perform an Identification Run for the drive.

Using the control panel to do these tasks is explained briefly in this chapter. For details on how to use the control panel, refer to chapter *Control panels* starting on page *41*.

How to start up the drive

How you start up the drive depends on the control panel you have.

- **If you have an Assistant Control Panel**, you can either run the Start-up Assistant (see section *How to perform the guided start-up* on page *36*) or perform a limited start-up (see section *How to perform the limited start-up* on page *31*).

  The Start-up Assistant, which is included in the Assistant Control Panel only, guides you through all essential settings to be done. In the limited start-up, the drive gives no guidance; you go through the very basic settings by following the instructions given in the manual.
- **If you have a Basic Control Panel**, follow the instructions given in section *How to perform the limited start-up* on page *31*.

How to perform the limited start-up

For the limited start-up, you can use the Basic Control Panel or the Assistant Control Panel. The instructions below are valid for both control panels, but the displays shown are the Basic Control Panel displays, unless the instruction applies to the Assistant Control Panel only.

Before you start, ensure that you have the motor nameplate data on hand.

SAFETY

The start-up may only be carried out by a qualified electrician.

The safety instructions given in chapter *Safety* must be followed during the start-up procedure.

The drive will start up automatically at power up, if the external run command is on.

☐ Check the installation. See the checklist in chapter *Installation*, page *29*.

☐ Check that the starting of the motor does not cause any danger.
De-couple the driven machine if:
- there is a risk of damage in case of incorrect direction of rotation, or
- an ID Run needs to be performed during the drive start-up. ID Run is essential only in applications that require the ultimate in motor control accuracy.

POWER-UP

☐ Apply input power.
The Basic Control Panel powers up into the Output mode.

The Assistant Control Panel asks if you want to run the Start-up Assistant. If you press EXIT, the Start-up Assistant is not run, and you can continue with manual start-up in a similar manner as described below for the Basic Control Panel.

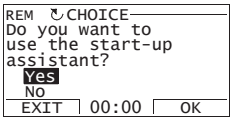

MANUAL ENTRY OF START-UP DATA (*Group 99: START-UP DATA*)

☐ If you have an Assistant Control Panel, select the language (the Basic Control Panel does not support languages). See parameter *9901* for the values of the available language alternatives. You find parameter descriptions in section *Complete parameter descriptions* starting on page *98*.

The general parameter setting procedure is described below for the Basic Control Panel. You find more detailed instructions for the Basic Control Panel on page *67*. Instructions for the Assistant Control Panel are on page *49*.

The general parameter setting procedure:

1. To go to the Main menu, press if the bottom line shows OUTPUT; otherwise press repeatedly until you see MENU at the bottom.

2. Press keys ▲/▼ until you see "PAr" and press .

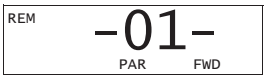

3. Find the appropriate parameter group with keys ▲/▼ and press .

4. Find the appropriate parameter in the group with keys ▲/▼.

5. Press and hold for about two seconds until the parameter value is shown with SET under the value.

6. Change the value with keys ▲/▼. The value changes faster while you keep the key pressed down.

7. Save the parameter value by pressing .

☐ Select the application macro (parameter *9902*). The general parameter setting procedure is given above.

The default value 1 (ABB STANDARD) is suitable in most cases.

REM 9902 PAR FWD

☐ Select the motor control mode (parameter *9904*).

1 (VECTOR:SPEED) is suitable in most cases. 2 (VECTOR:TORQ) is suitable for torque control applications. 3 (SCALAR:FREQ) is recommended

- for multimotor drives when the number of the motors connected to the drive is variable
- when the nominal current of the motor is less than 20% of the nominal current of the drive
- when the drive is used for test purposes with no motor connected.

REM 9904 PAR FWD

☐ Enter the motor data from the motor nameplate:

ABB Motors CE

3 ~ motor	M2AA 200 MLA 4						
	IEC 200 M/L 55						
			No				
			Ins.cl. F			IP 55	
V	Hz	kW	r/min	A	cos φ	IA/IN	t E/s
690 Y	50	30	1475	32.5	0.83		
400 D	50	30	1475	56	0.83		
660 Y	50	30	1470	34	0.83		
380 D	50	30	1470	59	0.83		
415 D	50	30	1475	54	0.83		
440 D	60	35	1770	59	0.83		
Cat. no	3GAA 202 001 - ADA						
6312/C3			6210/C3			180 kg	
			IEC 34-1				

380 V supply voltage

Note: Set the motor data to exactly the same value as on the motor nameplate. For example, if the motor nominal speed is 1470 rpm on the nameplate, setting the value of parameter *9908* MOTOR NOM SPEED to 1500 rpm results in the wrong operation of the drive.

- motor nominal voltage (parameter *9905*)

REM 9905 PAR FWD

- motor nominal current (parameter *9906*)

  Allowed range: 0.2…2.0 · I_{2hd} A

REM 9906 PAR FWD

- motor nominal frequency (parameter *9907*)

REM 9907 PAR FWD

- motor nominal speed (parameter *9908*)

REM 9908 PAR FWD

- motor nominal power (parameter *9909*)

REM 9909 PAR FWD

☐ Select the motor identification method (parameter *9910*).

The default value 0 (OFF/IDMAGN) using the identification magnetization is suitable for most applications. It is applied in this basic start-up procedure. Note however that this requires that:

- parameter *9904* is set to 1 (VECTOR:SPEED) or 2 (VECTOR:TORQ), or
- parameter *9904* is set to 3 (SCALAR:FREQ) and parameter *2101* is set to 3 (SCALAR FLYST) or 5 (FLY + BOOST).

If your selection is 0 (OFF/IDMAGN), move to the next step.

Value 1 (ON), which performs a separate ID Run, should be selected if:

- vector control mode is used [parameter *9904* = 1 (VECTOR:SPEED) or 2 (VECTOR:TORQ)], and/or
- the operation point is near zero speed, and/or
- operation at torque range above the motor nominal torque over a wide speed range and without any measured speed feedback is required.

If you decide to do the ID Run [value 1 (ON)], continue by following the separate instructions given on page *39* in section *How to perform the ID Run* and then return to step *DIRECTION OF THE MOTOR ROTATION* on page *34*.

IDENTIFICATION MAGNETIZATION WITH ID RUN SELECTION 0 (OFF/IDMAGN)

☐ As stated above, the identification magnetization is performed only if:

- parameter *9904* is set to 1 (VECTOR:SPEED) or 2 (VECTOR:TORQ), or
- parameter *9904* is set to 3 (SCALAR:FREQ) and parameter *2101* is set to 3 (SCALAR FLYST) or 5 (FLY + BOOST).

Press key LOC/REM to switch to local control (LOC shown on the left).

Press ◇ to start the drive. The motor model is now calculated by magnetizing the motor for 10 to 15 s at zero speed (motor not rotating).

DIRECTION OF THE MOTOR ROTATION

☐ Check the direction of the motor rotation.

- If the drive is in remote control (REM shown on the left), switch to local control by pressing LOC/REM.
- To go to the Main menu, press ◸ if the bottom line shows OUTPUT; otherwise press ◸ repeatedly until you see MENU at the bottom.
- Press keys ▲/▼ until you see "rEF" and press ◸.
- Increase the frequency reference from zero to a small value with key ▲.
- Press ◇ to start the motor.
- Check that the actual direction of the motor is the same as indicated on the display (FWD means forward and REV reverse).
- Press ▽ to stop the motor.

	To change the direction of the motor rotation: • Disconnect input power from the drive, and wait 5 minutes for the intermediate circuit capacitors to discharge. Measure the voltage between each input terminal (U1, V1 and W1) and earth with a multimeter to ensure that the drive is discharged. • Exchange the position of two motor cable phase conductors at the drive output terminals or at the motor connection box. • Verify your work by applying input power and repeating the check as described above.	forward direction reverse direction
	SPEED LIMITS AND ACCELERATION/DECELERATION TIMES	
☐	Set the minimum speed (parameter *2001*).	LOC 2001 PAR FWD
☐	Set the maximum speed (parameter *2002*).	LOC 2002 PAR FWD
☐	Set the acceleration time 1 (parameter *2202*). **Note:** Check also acceleration time 2 (parameter *2205*) if two acceleration times will be used in the application.	LOC 2202 PAR FWD
☐	Set the deceleration time 1 (parameter *2203*). **Note:** Set also deceleration time 2 (parameter *2206*) if two deceleration times will be used in the application.	LOC 2203 PAR FWD
	SAVING A USER PARAMETER SET AND FINAL CHECK	
☐	The start-up is now completed. However, it might be useful at this stage to set the parameters required by your application and save the settings as a user parameter set as instructed in section *User parameter sets* on page *81*.	LOC 9902 PAR FWD
☐	Check that the drive state is OK. Basic Control Panel: Check that there are no faults or alarms shown on the display. If you want to check the LEDs on the front of the drive, switch first to remote control (otherwise a fault is generated) before removing the panel and verifying that the red LED is not lit and the green LED is lit but not blinking. Assistant Control Panel: Check that there are no faults or alarms shown on the display and that the panel LED is green and does not blink.	
	The drive is now ready for use.	

How to perform the guided start-up

To be able to perform the guided start-up, you need the Assistant Control Panel.

Before you start, ensure that you have the motor nameplate data on hand.

SAFETY

The start-up may only be carried out by a qualified electrician.

The safety instructions given in chapter *Safety* must be followed during the start-up procedure.

The drive will start up automatically at power up, if the external run command is on.

☐ Check the installation. See the checklist in chapter *Installation*, page *29*.

☐ Check that the starting of the motor does not cause any danger.
De-couple the driven machine if:
- there is a risk of damage in case of incorrect direction of rotation, or
- an ID Run needs to be performed during the drive start-up. ID Run is essential only in applications that require the ultimate in motor control accuracy.

POWER-UP

☐ Apply input power. The control panel first asks if you want to use the Start-up Assistant.
- Press OK (when Yes is highlighted) to run the Start-up Assistant.
- Press EXIT if you do not want to run the Start-up Assistant.
- Press key ▼ to highlight No and then press OK if you want to make the panel ask (or not ask) the question about running the Start-up Assistant again the next time you switch on the power to the drive.

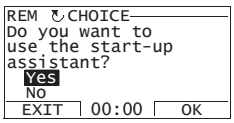

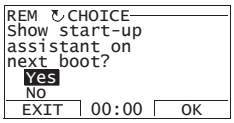

SELECTING THE LANGUAGE

☐ If you decided to run the Start-up Assistant, the display then asks you to select the language. Scroll to the desired language with keys ▲/▼ and press SAVE to accept.
If you press EXIT, the Start-up Assistant is stopped.

STARTING THE GUIDED SET-UP

☐ The Start-up Assistant now guides you through the set-up tasks, starting with the motor set-up. Set the motor data to exactly the same value as on the motor nameplate.
Scroll to the desired parameter value with keys ▲/▼ and press SAVE to accept and continue with the Start-up Assistant.
Note: At any time, if you press EXIT, the Start-up Assistant is stopped and the display goes to the Output mode.

☐	After completing a set-up task, the Start-up Assistant suggests the next one. • Press OK (when Continue is highlighted) to continue with the suggested task. • Press key ▼ to highlight Skip and then press OK to move to the following task without doing the suggested task. • Press EXIT to stop the Start-up Assistant.	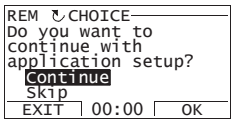
SAVING A USER PARAMETER SET AND FINAL CHECK		
☐	The start-up is now completed. However, it might be useful at this stage to set the parameters required by your application and save the settings as a user parameter set as instructed in section *User parameter sets* on page *81*.	
☐	After the whole set-up is completed, check there are no faults or alarms shown on the display and the panel LED is green and does not blink.	
The drive is now ready for use.		

How to control the drive through the I/O interface

The table below instructs how to operate the drive through the digital and analog inputs when:

- the motor start-up is performed, and
- the default (standard) parameter settings are valid.

Displays of the Basic Control Panel are shown as an example.

PRELIMINARY SETTINGS	
If you need to change the direction of rotation, check that parameter *1003* is set to 3 (REQUEST).	
Ensure that the control connections are wired according to the connection diagram given for the ABB Standard macro.	See section *ABB Standard macro* on page *72*.
Ensure that the drive is in remote control. Press key LOC REM to switch between remote and local control.	In remote control, the panel display shows text REM.
STARTING AND CONTROLLING THE SPEED OF THE MOTOR	
Start by switching digital input DI1 on. Assistant Control Panel: The arrow starts rotating. It is dotted until the setpoint is reached. Basic Control Panel: Text FWD starts flashing fast and stops after the setpoint is reached	
Regulate the drive output frequency (motor speed) by adjusting the voltage of analog input AI1.	
CHANGING THE DIRECTION OF ROTATION OF THE MOTOR	
Reverse direction: Switch digital input DI2 on.	
Forward direction: Switch digital input DI2 off.	
STOPPING THE MOTOR	
Switch digital input DI1 off. The motor stops. Assistant Control Panel: The arrow stops rotating. Basic Control Panel: Text FWD starts flashing slowly.	

How to perform the ID Run

The drive estimates motor characteristics automatically using identification magnetization when the drive is started for the first time and after any motor parameter (*Group 99: START-UP DATA*) is changed. This is valid when parameter *9910* ID RUN has value 0 (OFF/IDMAGN), and

- parameter *9904* = 1 (VECTOR:SPEED) or 2 (VECTOR:TORQ), or
- parameter *9904* = 3 (SCALAR:FREQ) and parameter *2101* = 3 (SCALAR FLYST) or 5 (FLY + BOOST).

In most applications there is no need to perform a separate ID Run [*9910* ID RUN = 1 (ON)]. The ID Run should be selected if:

- vector control mode is used [parameter *9904* = 1 (VECTOR:SPEED) or 2 (VECTOR:TORQ)], and/or
- the operation point is near zero speed, and/or
- operation at torque range above the motor nominal torque over a wide speed range and without any measured speed feedback is required.

Note: If motor parameters (*Group 99: START-UP DATA*) are changed after the ID Run, it must be repeated.

ID Run procedure

The general parameter setting procedure is not repeated here. For Assistant Control Panel see page *49* and for Basic Control Panel page *67* in chapter *Control panels*.

PRE-CHECK

WARNING! The motor will run at up to approximately 50…80% of the nominal speed during the ID Run. The motor will rotate in the forward direction. **Ensure that it is safe to run the motor before performing the ID Run!**

- ☐ De-couple the motor from the driven equipment.
- ☐ Check that the values of the motor data parameters *9905*…*9909* are equivalent to those on the motor nameplate, as shown in the steps on page *33*.
- ☐ If parameter values (*Group 01: OPERATING DATA* to *Group 98: OPTIONS*) are changed before the ID Run, check that the new settings meet the following conditions:
  - ☐ *2001* MINIMUM SPEED $\leq$ 0 rpm
  - ☐ *2002* MAXIMUM SPEED > 80% of the motor rated speed
  - ☐ *2003* MAXIMUM CURRENT $\geq I_{2hd}$
  - ☐ *2017* MAX TORQUE 1 > 50% or *2018* MAX TORQUE 2 > 50%, depending on which limit is in use according to parameter *2014* MAX TORQUE SEL.
- ☐ Check that the Run Enable signal is on (parameter *1601*).
- ☐ Ensure that the panel is in local control (LOC shown on the left / at the top). Press key LOC/REM to switch between local and remote control.

ID RUN WITH THE ASSISTANT CONTROL PANEL		
☐	Change parameter *9910* ID RUN to 1 (ON). Save the new setting by pressing SAVE.	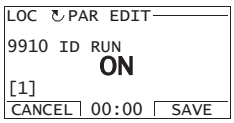
☐	If you want to monitor actual values during the ID Run, go to the Output mode by pressing EXIT repeatedly until you get there.	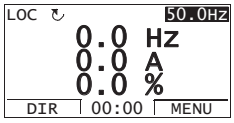
☐	Press ◈ to start the ID Run. The panel keeps switching between the display that was shown when you started the ID Run and the alarm display presented on the right. In general, it is recommended not to press any control panel keys during the ID Run. However, you can stop the ID Run at any time by pressing ⊗.	
	After the ID Run is completed, the alarm display is not shown any more. If the ID Run fails, the fault display presented on the right is shown.	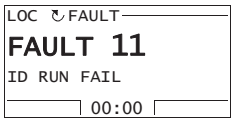
ID RUN WITH THE BASIC CONTROL PANEL		
☐	Change parameter *9910* ID RUN to 1 (ON). Save the new setting by pressing ⊙.	
☐	If you want to monitor actual values during the ID Run, go to the Output mode by pressing 7 repeatedly until you get there.	
☐	Press ◈ to start the ID Run. The panel keeps switching between the display that was shown when you started the ID Run and the alarm display presented on the right. In general, it is recommended not to press any control panel keys during the ID Run. However, you can stop the ID Run at any time by pressing ⊗.	
	After the ID Run is completed, the alarm display is not shown any more. If the ID Run fails, the fault display presented on the right is shown.	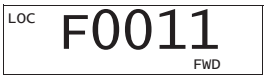

Control panels

About control panels

Use a control panel to control the drive, read status data and adjust parameters. The drive works with either of two different control panel types:

- Basic Control Panel – This panel (described in section *Basic Control Panel* on page *62*) provides basic tools for manual entry of parameter values.
- Assistant Control Panel – This panel (described below) includes pre-programmed assistants to automate the most common parameter setups. The panel provides language support. It is available with different language sets.

Compatibility

The manual is compatible with the following panel versions:

- Basic Control Panel: ACS-CP-C Rev. K
- Assistant Control Panel (Area 1): ACS-CP-A Rev. Y
- Assistant Control Panel (Area 2): ACS-CP-L Rev. E
- Assistant Control Panel (Asia): ACS-CP-D Rev. M

See page *45* for how to find out the version of your Assistant Control Panel. See parameter *9901* LANGUAGE to see the languages supported by the different Assistant Control Panels.

Assistant Control Panel

Features

The Assistant Control Panel features:

- alphanumeric control panel with an LCD display
- language selection for the display
- Start-up Assistant to ease drive commissioning
- copy function – parameters can be copied to the control panel memory for later transfer to other drives or for backup of a particular system.
- context sensitive help
- real time clock.

Overview

The following table summarizes the key functions and displays on the Assistant Control Panel.

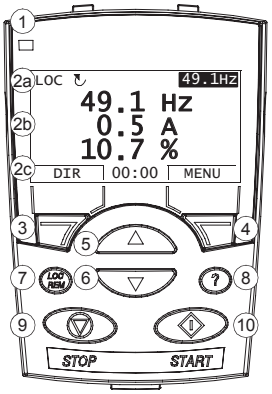

No.	Use
1	Status LED – Green for normal operation. If LED is flashing, or red, see section *Diagnostic displays* on page *243*.
2	LCD display – Divided into three main areas: a. Status line – variable, depending on the mode of operation, see section *Status line* on page *43*. b. Center – variable; in general, shows signal and parameter values, menus or lists. Shows also faults and alarms. c. Bottom line – shows current functions of the two soft keys and, if enabled, the clock display.
3	Soft key 1 – Function depends on the context. The text in the lower left corner of the LCD display indicates the function.
4	Soft key 2 – Function depends on the context. The text in the lower right corner of the LCD display indicates the function.
5	Up – • Scrolls up through a menu or list displayed in the center of the LCD display. • Increments a value if a parameter is selected. • Increments the reference value if the upper right corner is highlighted. Holding the key down changes the value faster.
6	Down – • Scrolls down through a menu or list displayed in the center of the LCD display. • Decrements a value if a parameter is selected. • Decrements the reference value if the upper right corner is highlighted. Holding the key down changes the value faster.
7	LOC/REM – Changes between local and remote control of the drive.
8	Help – Displays context sensitive information when the key is pressed. The information displayed describes the item currently highlighted in the center of the display.
9	STOP – Stops the drive in local control.
10	START – Starts the drive in local control.

Status line

The top line of the LCD display shows the basic status information of the drive.

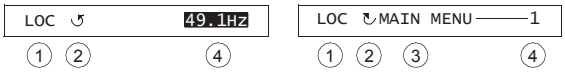

No.	Field	Alternatives	Significance
1	Control location	LOC	Drive control is local, that is, from the control panel.
		REM	Drive control is remote, such as the drive I/O or fieldbus.
2	State	↻	Forward shaft direction
		↺	Reverse shaft direction
		Rotating arrow	Drive is running at setpoint.
		Dotted rotating arrow	Drive is running but not at setpoint.
		Stationary arrow	Drive is stopped.
		Dotted stationary arrow	Start command is present, but the motor is not running, e.g. because start enable is missing.
3	Panel operation mode		• Name of the current mode • Name of the list or menu shown • Name of the operation state, e.g. PAR EDIT.
4	Reference value or number of the selected item		• Reference value in the Output mode • Number of the highlighted item, e.g mode, parameter group or fault.

Operation

You operate the control panel with menus and keys. The keys include two context-sensitive soft keys, whose current function is indicated by the text shown in the display above each key.

You select an option, e.g. operation mode or parameter, by scrolling the ▲ and ▼ arrow keys until the option is highlighted (in reverse video) and then pressing the relevant soft key. With the right soft key you usually enter a mode, accept an option or save the changes. The left soft key is used to cancel the made changes and return to the previous operation level.

The Assistant Control Panel has nine panel modes: Output, Parameters, Assistants, Changed Parameters, Fault Logger, Clock Set, Parameter Backup, I/O Settings and Fault. The operation in the first eight modes is described in this chapter. When a fault or alarm occurs, the panel goes automatically to the Fault mode showing the fault or alarm. You can reset it in the Output or Fault mode (see chapter *Diagnostics*).

Initially, the panel is in the Output mode, where you can start, stop, change the direction, switch between local and remote control, modify the reference value and monitor up to three actual values. To do other tasks, go first to the Main menu and select the appropriate mode on the menu. The status line (see section *Status line* on page *43*) shows the name of the current menu, mode, item or state.

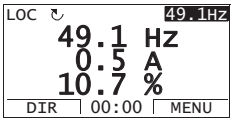

How to do common tasks

The table below lists common tasks, the mode in which you can perform them and the page number where the steps to do the task are described in detail.

Task	Mode	Page
How to get help	Any	*45*
How to find out the panel version	At power up	*45*
How to adjust the display contrast	Output	*48*
How to switch between local and remote control	Any	*46*
How to start and stop the drive	Any	*46*
How to change the direction of the motor rotation	Output	*47*
How to set the speed, frequency or torque reference	Output	*48*
How to change the value of a parameter	Parameters	*49*
How to select the monitored signals	Parameters	*50*
How to do guided tasks (specification of related parameter sets) with assistants	Assistants	*51*
How to view and edit changed parameters	Changed Parameters	*54*
How to view faults	Fault Logger	*55*
How to reset faults and alarms	Output, Fault	*249*
How to show/hide the clock, change date and time formats, set the clock and enable/disable automatic clock transitions according to the daylight saving changes	Clock Set	*56*
How to copy parameters from the drive to the control panel	Parameter Backup	*59*
How to restore parameters from the control panel to the drive	Parameter Backup	*59*
How to view backup information	Parameter Backup	*60*
How to edit and change parameter settings related to I/O terminals	I/O Settings	*61*

How to get help

Step	Action	Display
1.	Press (?) to read the context-sensitive help text for the item that is highlighted.	LOC ↻PAR GROUPS——10 01 OPERATING DATA 03 FB ACTUAL SIGNALS 04 FAULT HISTORY 10 START/STOP/DIR 11 REFERENCE SELECT EXIT | 00:00 | SEL
	If help text exists for the item, it is shown on the display.	LOC ↻HELP—————— This group defines external sources (EXT1 and EXT2) for commands that enable start, stop and EXIT | 00:00 |
2.	If the whole text is not visible, scroll the lines with keys ▲ and ▼.	LOC ↻HELP—————— external sources (EXT1 and EXT2) for commands that enable start, stop and direction changes. EXIT | 00:00 |
3.	After reading the text, return to the previous display by pressing EXIT.	LOC ↻PAR GROUPS——10 01 OPERATING DATA 03 FB ACTUAL SIGNALS 04 FAULT HISTORY 10 START/STOP/DIR 11 REFERENCE SELECT EXIT | 00:00 | SEL

How to find out the panel version

Step	Action	Display
1.	If the power is switched on, switch it off.	
2.	Keep key (?) pressed down while you switch on the power and read the information. The display shows the following panel information: Panel FW: panel firmware version ROM CRC: panel ROM check sum Flash Rev: flash content version Flash content comment. When you release the (?) key, the panel goes to the Output mode.	PANEL VERSION INFO Panel FW: x.xx ROM CRC: xxxxxxxxxx Flash Rev: x.xx xxxxxxxxxxxxxxxxxxxx

How to start, stop and switch between local and remote control

You can start, stop and switch between local and remote control in any mode. To be able to start or stop the drive, the drive must be in local control.

Step	Action	Display
1.	• To switch between remote control (REM shown on the status line) and local control (LOC shown on the status line), press LOC/REM. **Note:** Switching to local control can be disabled with parameter *1606* LOCAL LOCK. The very first time the drive is powered up, it is in remote control (REM) and controlled through the drive I/O terminals. To switch to local control (LOC) and control the drive using the control panel, press LOC/REM. The result depends on how long you press the key: • If you release the key immediately (the display flashes "Switching to the local control mode"), the drive stops. Set the local control reference as instructed on page *48*. • If you press the key for about two seconds, the drive continues as before. The drive copies the current remote values for the run/stop status and the reference, and uses them as the initial local control settings.	LOC ↻ MESSAGE Switching to the local control mode. 00:00
	• To stop the drive in local control, press STOP.	The arrow (↻ or ↺) on the status line stops rotating.
	• To start the drive in local control, press START.	The arrow (↻ or ↺) on the status line starts rotating. It is dotted until the drive reaches the setpoint.

Output mode

In the Output mode, you can:

- monitor actual values of up to three signals in *Group 01: OPERATING DATA*
- change the direction of the motor rotation
- set the speed, frequency or torque reference
- adjust the display contrast
- start, stop, change the direction and switch between local and remote control.

You get to the Output mode by pressing EXIT repeatedly.

The top right corner of the display shows the reference value. The center can be configured to show up to three signal values or bar graphs; see page *50* for instructions on selecting and modifying the monitored signals.

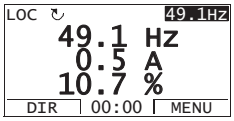

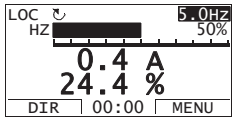

How to change the direction of the motor rotation

Step	Action	Display
1.	If you are not in the Output mode, press EXIT repeatedly until you get there.	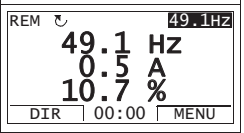
2.	If the drive is in remote control (REM shown on the status line), switch to local control by pressing LOC/REM. The display briefly shows a message about changing the mode and then returns to the Output mode.	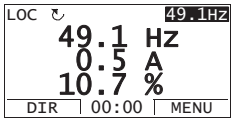
3.	To change the direction from forward (↻ shown on the status line) to reverse (↺ shown on the status line), or vice versa, press DIR. **Note**: Parameter *1003* DIRECTION must be set to 3 (REQUEST).	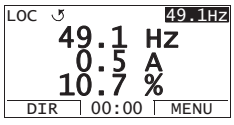

How to set the speed, frequency or torque reference

Step	Action	Display
1.	If you are not in the Output mode, press EXIT repeatedly until you get there.	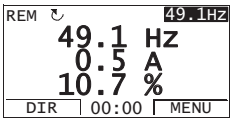
2.	If the drive is in remote control (REM shown on the status line), switch to local control by pressing LOC/REM. The display briefly shows a message about changing the mode and then returns to the Output mode. **Note**: With *Group 11: REFERENCE SELECT*, you can allow the reference modification in remote control.	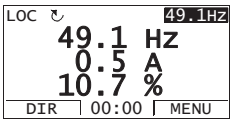
3.	• To increase the highlighted reference value shown in the top right corner of the display, press ▲. The value changes immediately. It is stored in the drive permanent memory and restored automatically after power switch-off. • To decrease the value, press ▼.	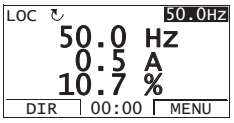

How to adjust the display contrast

Step	Action	Display
1.	If you are not in the Output mode, press EXIT repeatedly until you get there.	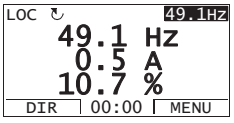
2.	• To increase the contrast, press keys MENU and ▲ simultaneously. • To decrease the contrast, press keys MENU and ▼ simultaneously.	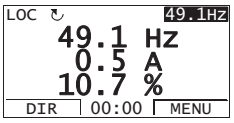

Parameters mode

In the Parameters mode, you can:

- view and change parameter values
- start, stop, change the direction and switch between local and remote control.

How to select a parameter and change its value

Step	Action	Display
1.	Go to the Main menu by pressing MENU if you are in the Output mode, otherwise by pressing EXIT repeatedly until you get to the Main menu.	LOC ↻MAIN MENU 1 **PARAMETERS** ASSISTANTS CHANGED PAR EXIT | 00:00 | ENTER
2.	Go to the Parameters mode by selecting PARAMETERS on the menu with keys ▲ and ▼, and pressing ENTER.	LOC ↻PAR GROUPS 01 01 OPERATING DATA 03 FB ACTUAL SIGNALS 04 FAULT HISTORY 10 START/STOP/DIR 11 REFERENCE SELECT EXIT | 00:00 | SEL
3.	Select the appropriate parameter group with keys ▲ and ▼. Press SEL.	LOC ↻PAR GROUPS 99 99 START-UP DATA 01 OPERATING DATA 03 FB ACTUAL SIGNALS 04 FAULT HISTORY 10 START/STOP/DIR EXIT | 00:00 | SEL LOC ↻PARAMETERS 9901 LANGUAGE ENGLISH 9902 APPLIC MACRO 9904 MOTOR CTRL MODE 9905 MOTOR NOM VOLT EXIT | 00:00 | EDIT
4.	Select the appropriate parameter with keys ▲ and ▼. The current value of the parameter is shown below the selected parameter. Press EDIT.	LOC ↻PARAMETERS 9901 LANGUAGE 9902 APPLIC MACRO ABB STANDARD 9904 MOTOR CTRL MODE 9905 MOTOR NOM VOLT EXIT | 00:00 | EDIT LOC ↻PAR EDIT 9902 APPLIC MACRO **ABB STANDARD** [1] CANCEL | 00:00 | SAVE
5.	Specify a new value for the parameter with keys ▲ and ▼. Pressing the key once increments or decrements the value. Holding the key down changes the value faster. Pressing the keys simultaneously replaces the displayed value with the default value.	LOC ↻PAR EDIT 9902 APPLIC MACRO **3-WIRE** [2] CANCEL | 00:00 | SAVE
6.	• To save the new value, press SAVE. • To cancel the new value and keep the original, press CANCEL.	LOC ↻PARAMETERS 9901 LANGUAGE 9902 APPLIC MACRO 3-WIRE 9904 MOTOR CTRL MODE 9905 MOTOR NOM VOLT EXIT | 00:00 | EDIT

How to select the monitored signals

Step	Action	Display
1.	You can select which signals are monitored in the Output mode and how they are displayed with *Group 34: PANEL DISPLAY* parameters. See page *49* for detailed instructions on changing parameter values. By default, the display shows three signals. The particular default signals depend on the value of parameter *9902* APPLIC MACRO: For macros whose default value of parameter *9904* MOTOR CTRL MODE is 1 (VECTOR:SPEED), the default for signal 1 is *0102* SPEED, otherwise *0103* OUTPUT FREQ. The defaults for signals 2 and 3 are always *0104* CURRENT and *0105* TORQUE, respectively. To change the default signals, select up to three signals from *Group 01: OPERATING DATA* to be shown. Signal 1: Change the value of parameter *3401* SIGNAL1 PARAM to the index of the signal parameter in *Group 01: OPERATING DATA* (= number of the parameter without the leading zero), e.g. 105 means parameter *0105* TORQUE. Value 100 means that no signal is displayed. Repeat for signals 2 (*3408* SIGNAL2 PARAM) and 3 (*3415* SIGNAL3 PARAM).	LOC ↻PAR EDIT 3401 SIGNAL1 PARAM OUTPUT FREQ [103] CANCEL 00:00 SAVE LOC ↻PAR EDIT 3408 SIGNAL2 PARAM CURRENT [104] CANCEL 00:00 SAVE LOC ↻PAR EDIT 3415 SIGNAL3 PARAM TORQUE [105] CANCEL 00:00 SAVE
2.	Select how you want the signals to be displayed: as a decimal number or a bar graph. For decimal numbers, you can specify the decimal point location, or use the decimal point location and unit of the source signal [setting (9 (DIRECT)]. For details, see parameter *3404*. Signal 1: parameter *3404* OUTPUT1 DSP FORM Signal 2: parameter *3411* OUTPUT2 DSP FORM Signal 3: parameter *3418* OUTPUT3 DSP FORM.	LOC ↻PAR EDIT 3404 OUTPUT1 DSP FORM DIRECT [9] CANCEL 00:00 SAVE
3.	Select the units to be displayed for the signals. This has no effect if parameter *3404*/*3411*/*3418* is set to 9 (DIRECT). For details, see parameter *3405*. Signal 1: parameter *3405* OUTPUT1 UNIT Signal 2: parameter *3412* OUTPUT2 UNIT Signal 3: parameter *3419* OUTPUT3 UNIT.	LOC ↻PAR EDIT 3405 OUTPUT1 UNIT Hz [3] CANCEL 00:00 SAVE
4.	Select the scalings for the signals by specifying the minimum and maximum display values. This has no effect if parameter *3404*/*3411*/*3418* is set to 9 (DIRECT). For details, see parameters *3406* and *3407*. Signal 1: parameters *3406* OUTPUT1 MIN and *3407* OUTPUT1 MAX Signal 2: parameters *3413* OUTPUT2 MIN and *3414* OUTPUT2 MAX Signal 3: parameters *3420* OUTPUT3 MIN and *3421* OUTPUT3 MAX.	LOC ↻PAR EDIT 3406 OUTPUT1 MIN 0.0 Hz CANCEL 00:00 SAVE LOC ↻PAR EDIT 3407 OUTPUT1 MAX 500.0 Hz CANCEL 00:00 SAVE

Assistants mode

When the drive is first powered up, the Start-up Assistant guides you through the setup of the basic parameters. The Start-up Assistant is divided into assistants, each of which guides you through the task of specifying a related parameter set, for example Motor Set-up or PID Control. You can activate the assistants one after the other as the Start-up Assistant suggests, or independently. The tasks of the assistants are listed in the table on page 52.

In the Assistants mode, you can:

- use assistants to guide you through the specification of a set of basic parameters
- start, stop, change the direction and switch between local and remote control.

How to use an assistant

The table below shows the basic operation sequence which leads you through assistants. The Motor Set-up Assistant is used as an example.

Step	Action	Display
1.	Go to the Main menu by pressing MENU if you are in the Output mode, otherwise by pressing EXIT repeatedly until you get to the Main menu.	LOC ↻MAIN MENU 1 PARAMETERS ASSISTANTS CHANGED PAR EXIT | 00:00 | ENTER
2.	Go to the Assistants mode by selecting ASSISTANTS on the menu with keys ▲ and ▼, and pressing ENTER.	LOC ↻ASSISTANTS 1 Start-up assistant Motor Set-up Application Speed control EXT1 Speed control EXT2 EXIT | 00:00 | SEL
3.	Select the assistant with keys ▲ and ▼, and press SEL. If you select any other assistant than the Start-up Assistant, it guides you through the task of specification of its parameter set as shown in steps 4. and 5. below. After that you can select another assistant on the Assistants menu or exit the Assistants mode. The Motor Set-up Assistant is used here as an example. If you select the Start-up Assistant, it activates the first assistant, which guides you through the task of specification of its parameter set as shown in steps 4. and 5. below. The Start-up Assistant then asks if you want to continue with the next assistant or skip it – select the appropriate answer with keys ▲ and ▼, and press SEL. If you choose to skip, the Start-up Assistant asks the same question about the next assistant, and so on.	LOC ↻PAR EDIT 9905 MOTOR NOM VOLT 220 V EXIT | 00:00 | SAVE LOC ↻CHOICE Do you want to continue with application setup? Continue Skip EXIT | 00:00 | OK
4.	• To specify a new value, press keys ▲ and ▼. • To ask for information on the requested parameter, press key ?. Scroll the help text with keys ▲ and ▼. Close the help by pressing EXIT.	LOC ↻PAR EDIT 9905 MOTOR NOM VOLT 240 V EXIT | 00:00 | SAVE LOC ↻HELP Set as given on the motor nameplate. Voltage value must correspond to motor D/Y connection. EXIT | 00:00 |

Step	Action	Display
5.	• To accept the new value and continue to the setting of the next parameter, press SAVE. • To stop the assistant, press EXIT.	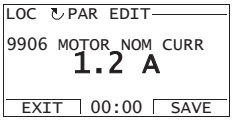

The table below lists the tasks of the assistants and the relevant drive parameters. Depending on the selection made in the Application task (parameter *9902* APPLIC MACRO), the Start-up Assistant decides, which consequent tasks it suggests.

Name	Description	Set parameters
Language select	Selecting the language	*9901*
Motor set-up	Setting the motor data Performing the motor identification. (If the speed limits are not in the allowed range: Setting the limits.)	*9904…9909* *9910*
Application	Selecting the application macro	*9902*, parameters associated to the macro
Option modules	Activating the option modules	*Group 35: MOTOR TEMP MEAS* *Group 52: PANEL COMM* *9802*
Speed control EXT1	Selecting the source for the speed reference	*1103*
	(If AI1 is used: Setting analog input AI1 limits, scale, inversion)	(*1301…1303*, *3001*)
	Setting the reference limits	*1104*, *1105*
	Setting the speed (frequency) limits	*2001*, *2002*, (*2007*, *2008*)
	Setting the acceleration and deceleration times	*2202*, *2203*
Speed control EXT2	Selecting the source for the speed reference	*1106*
	(If AI1 is used: Setting analog input AI1 limits, scale, inversion)	(*1301…1303*, *3001*)
	Setting the reference limits	*1107*, *1108*
Torque control	Selecting the source for the torque reference	*1106*
	(If AI1 is used: Setting analog input AI1 limits, scale, inversion)	(*1301…1303*, *3001*)
	Setting the reference limits	*1107*, *1108*
	Setting the torque ramp up and ramp down times	*2401*, *2402*
PID control	Selecting the source for the process reference	*1106*
	(If AI1 is used: Setting analog input AI1 limits, scale, inversion)	(*1301…1303*, *3001*)
	Setting the reference limits	*1107*, *1108*
	Setting the speed (reference) limits	*2001*, *2002*, (*2007*, *2008*)
	Setting the source and limits for the process actual value	*4016*, *4018*, *4019*
Start/Stop control	Selecting the source for start and stop signals of the two external control locations, EXT1 and EXT2	*1001*, *1002*
	Selecting between EXT1 and EXT2	*1102*
	Defining the direction control	*1003*
	Defining the start and stop modes	*2101…2103*
	Selecting the use of Run Enable signal	*1601*
Timed functions	Setting the timed functions	*Group 36: TIMED FUNCTIONS*
	Selecting the timed start/stop control for external control locations EXT1 and EXT2	*1001*, *1002*
	Selecting timed EXT1/EXT2 control	*1102*
	Activation of timed constant speed 1	*1201*

Name	Description	Set parameters
	Selecting timed function status indicated through relay output RO	*1401*
	Selecting timed PID1 parameter set 1/2 control	*4027*
Protections	Setting the current and torque limits	*2003*, *2017*
Output signals	Selecting the signals indicated through relay output RO	*Group 14: RELAY OUTPUTS*
	Selecting the signals indicated through analog output AO	*Group 15: ANALOG OUTPUTS*
	Setting the minimum, maximum, scaling and inversion	

Changed Parameters mode

In the Changed Parameters mode, you can:

- view a list of all parameters that have been changed from the macro default values
- change these parameters
- start, stop, change the direction and switch between local and remote control.

How to view and edit changed parameters

Step	Action	Display
1.	Go to the Main menu by pressing MENU if you are in the Output mode, otherwise by pressing EXIT repeatedly until you get to the Main menu.	LOC ↻MAIN MENU 1 PARAMETERS ASSISTANTS CHANGED PAR EXIT 00:00 ENTER
2.	Go to the Changed Parameters mode by selecting CHANGED PAR on the menu with keys ▲ and ▼, and pressing ENTER.	LOC ↻CHANGED PAR 1202 CONST SPEED 1 10.0 Hz 1203 CONST SPEED 2 1204 CONST SPEED 3 9902 APPLIC MACRO EXIT 00:00 EDIT
3.	Select the changed parameter on the list with keys ▲ and ▼. The value of the selected parameter is shown below it. Press EDIT to modify the value.	LOC ↻PAR EDIT 1202 CONST SPEED 1 10.0 Hz CANCEL 00:00 SAVE
4.	Specify a new value for the parameter with keys ▲ and ▼. Pressing the key once increments or decrements the value. Holding the key down changes the value faster. Pressing the keys simultaneously replaces the displayed value with the default value.	LOC ↻PAR EDIT 1202 CONST SPEED 1 15.0 Hz CANCEL 00:00 SAVE
5.	• To accept the new value, press SAVE. If the new value is the default value, the parameter is removed from the list of changed parameters. • To cancel the new value and keep the original, press CANCEL.	LOC ↻CHANGED PAR 1202 CONST SPEED 1 15.0 Hz 1203 CONST SPEED 2 1204 CONST SPEED 3 9902 APPLIC MACRO EXIT 00:00 EDIT

Fault Logger mode

In the Fault Logger mode, you can:

- view the drive fault history of maximum ten faults (after a power off, only the three latest faults are kept in the memory)
- see the details of the three latest faults (after a power off, the details of only the most recent fault is kept in the memory)
- read the help text for the fault
- start, stop, change the direction and switch between local and remote control.

How to view faults

Step	Action	Display
1.	Go to the Main menu by pressing MENU if you are in the Output mode, otherwise by pressing EXIT repeatedly until you get to the Main menu.	LOC ↻MAIN MENU 1 **PARAMETERS** ASSISTANTS CHANGED PAR EXIT 00:00 ENTER
2.	Go to the Fault Logger mode by selecting FAULT LOGGER on the menu with keys ▲ and ▼, and pressing ENTER. The display shows the fault log starting with the latest fault. The number on the row is the fault code according to which the causes and corrective actions are listed in chapter *Diagnostics*.	LOC ↻FAULT LOG 10: PANEL LOSS 19.03.05 13:04:57 6: DC UNDERVOLT 6: AI1 LOSS EXIT 00:00 DETAIL
3.	To see the details of a fault, select it with keys ▲ and ▼, and press DETAIL.	LOC ↻PANEL LOSS FAULT 10 FAULT TIME 1 13:04:57 FAULT TIME 2 EXIT 00:00 DIAG
4.	To show the help text, press DIAG. Scroll the help text with keys ▲ and ▼. After reading the help, press OK to return to the previous display.	LOC ↻DIAGNOSTICS Check: Comm lines and connections, parameter 3002, parameters in groups 10 and 11. EXIT 00:00 OK

Clock Set mode

In the Clock Set mode, you can:

- show or hide the clock
- change date and time display formats
- set the date and time
- enable or disable automatic clock transitions according to the daylight saving changes
- start, stop, change the direction and switch between local and remote control.

The Assistant Control Panel contains a battery to ensure the function of the clock when the panel is not powered by the drive.

How to show or hide the clock, change display formats, set the date and time and enable or disable clock transitions due to daylight saving changes

Step	Action	Display
1.	Go to the Main menu by pressing MENU if you are in the Output mode, otherwise by pressing EXIT repeatedly until you get to the Main menu.	LOC ↻MAIN MENU 1 PARAMETERS ASSISTANTS CHANGED PAR EXIT 00:00 ENTER
2.	Go to the Clock Set mode by selecting CLOCK SET on the menu with keys ▲ and ▼, and pressing ENTER.	LOC ↻TIME & DATE 1 CLOCK VISIBILITY TIME FORMAT DATE FORMAT SET TIME SET DATE EXIT 00:00 SEL
3.	• To show (hide) the clock, select CLOCK VISIBLILITY on the menu, press SEL, select Show clock (Hide clock) and press SEL, or, if you want to return to the previous display without making changes, press EXIT.	LOC ↻CLOCK VISIB 1 Show clock Hide clock EXIT 00:00 SEL
	• To specify the date format, select DATE FORMAT on the menu, press SEL and select a suitable format. Press OK to save or CANCEL to cancel your changes.	LOC ↻DATE FORMAT 1 dd.mm.yy mm/dd/yy dd.mm.yyyy mm/dd/yyyy CANCEL 00:00 OK
	• To specify the time format, select TIME FORMAT on the menu, press SEL and select a suitable format. Press OK to save or CANCEL to cancel your changes.	LOC ↻TIME FORMAT 1 24-hour 12-hour CANCEL 00:00 OK
	• To set the time, select SET TIME on the menu and press SEL. Specify the hours with keys ▲ and ▼, and press OK. Then specify the minutes. Press OK to save or CANCEL to cancel your changes.	LOC ↻SET TIME 15:41 CANCEL 00:00 OK

Step	Action	Display
	• To set the date, select SET DATE on the menu and press SEL. Specify the first part of the date (day or month depending on the selected date format) with keys ▲ and ▼, and press OK. Repeat for the second part. After specifying the year, press OK. To cancel your changes, press CANCEL. • To enable or disable the automatic clock transitions according to the daylight saving changes, select DAYLIGHT SAVING on the menu and press SEL. Pressing ? opens the help that shows the beginning and end dates of the period during which daylight saving time is used in each country or area whose daylight saving changes you can select to be followed. • To disable automatic clock transitions according to the daylight saving changes, select Off and press SEL. • To enable automatic clock transitions, select the country or area whose daylight saving changes are followed and press SEL. • To return to the previous display without making changes, press EXIT.	LOC ↻SET DATE 19.03.05 CANCEL 00:00 OK LOC DAYLIGHT SAV 1 Off EU US Australia1:NSW,Vict.. Australia2:Tasmania.. EXIT 00:00 SEL LOC HELP EU: On: Mar last Sunday Off: Oct last Sunday US: EXIT 00:00

Parameter Backup mode

The Parameter Backup mode is used to export parameters from one drive to another or to make a backup of the drive parameters. Uploading to the panel stores all drive parameters, including up to two user sets, to the Assistant Control Panel. The full set, partial parameter set (application) and user sets can then be downloaded from the control panel to another drive or the same drive.

The control panel memory is non-volatile and does not depend on the panel battery.

In the Parameter Backup mode, you can:

- copy all parameters from the drive to the control panel (UPLOAD TO PANEL). This includes all defined user sets of parameters and internal (not adjustable by the user) parameters such as those created by the ID Run.
- view the information about the backup stored to the control panel with UPLOAD TO PANEL (BACKUP INFO). This includes e.g. the type and rating of the drive where the backup was made. It is useful to check this information when you are going to copy the parameters to another drive with DOWNLOAD FULL SET to ensure that the drives match.
- restore the full parameter set from the control panel to the drive (DOWNLOAD FULL SET). This writes all parameters, including the internal non-user-adjustable motor parameters, to the drive. It does not include the user sets of parameters.

  Note: Only use this function to restore a drive from a backup or to transfer parameters to systems that are identical to the original system.
- copy a partial parameter set (part of the full set) from the control panel to a drive (DOWNLOAD APPLICATION). The partial set does not include user sets, internal motor parameters, parameters *9905*…*9909*, *1605*, *1607*, *5201*, nor any *Group 51: EXT COMM MODULE* and *Group 53: EFB PROTOCOL* parameters.

  The source and target drives and their motor sizes do not need to be the same.
- copy USER S1 parameters from the control panel to the drive (DOWNLOAD USER SET1). A user set includes *Group 99: START-UP DATA* parameters and the internal motor parameters.

  The function is only shown on the menu when User Set 1 has been first saved using parameter *9902* APPLIC MACRO (see section *User parameter sets* on page *81*) and then uploaded to the control panel with UPLOAD TO PANEL.
- copy USER S2 parameters from the control panel to the drive (DOWNLOAD USER SET2). As DOWNLOAD USER SET1 above.
- start, stop, change the direction and switch between local and remote control.

How to upload and download parameters

For the upload and download functions available, see above.

Step	Action	Display
1.	Go to the Main menu by pressing MENU if you are in the Output mode, otherwise by pressing EXIT repeatedly until you get to the Main menu.	LOC ↻MAIN MENU 1 PARAMETERS ASSISTANTS CHANGED PAR EXIT 00:00 ENTER
2.	Go to the Par Backup mode by selecting PAR BACKUP on the menu with keys ▲ and ▼, and pressing ENTER.	LOC ↻COPY MENU 1 UPLOAD TO PANEL BACKUP INFO DOWNLOAD FULL SET DOWNLOAD APPLICATION DOWNLOAD USER SET1 EXIT 00:00 SEL
3.	• To copy all parameters (including user sets and internal parameters) from the drive to the control panel, select UPLOAD TO PANEL on the Copy menu with keys ▲ and ▼, and press SEL. During the transfer, the display shows the transfer status as a percentage of completion. Press ABORT if you want to stop the operation.	LOC ↻PAR BACKUP Copying parameters 50% ABORT 00:00
	After the upload is completed, the display shows a message about the completion. Press OK to return to the Copy menu.	LOC ↻MESSAGE Parameter upload successful. OK 00:00
	• To perform downloads, select the appropriate operation (here DOWNLOAD FULL SET is used as an example) on the Copy menu with keys ▲ and ▼, and press SEL. The display shows the transfer status as a percentage of completion. Press ABORT if you want stop the operation.	LOC ↻PAR BACKUP Downloading parameters (full set) 50% ABORT 00:00
	After the download is completed, the display shows a message about the completion. Press OK to return to the Copy menu.	LOC ↻MESSAGE Parameter download successfully completed. OK 00:00

How to view information about the backup

Step	Action	Display
1.	Go to the Main menu by pressing MENU if you are in the Output mode, otherwise by pressing EXIT repeatedly until you get to the Main menu.	LOC ↻MAIN MENU 1 PARAMETERS ASSISTANTS CHANGED PAR EXIT 00:00 ENTER
2.	Go to the Par Backup mode by selecting PAR BACKUP on the menu with keys ▲ and ▼, and pressing ENTER.	LOC ↻COPY MENU 1 UPLOAD TO PANEL BACKUP INFO DOWNLOAD FULL SET DOWNLOAD APPLICATION DOWNLOAD USER SET1 EXIT 00:00 SEL
3.	Select BACKUP INFO on the Copy menu with keys ▲ and ▼, and press SEL. The display shows the following information about the drive where the backup was made: DRIVE TYPE: type of the drive DRIVE RATING: rating of the drive in format XXXYZ, where XXX: nominal current rating. If present, an "A" indicates a decimal point, e.g. 4A6 means 4.6 A. Y: 2 = 200 V 4 = 400 V 6 = 600 V Z: i = European loading package n = US loading package FIRMWARE: firmware version of the drive. You can scroll the information with keys ▲ and ▼.	LOC ↻BACKUP INFO DRIVE TYPE ACS550 3304 DRIVE RATING 4A62i 3301 FIRMWARE EXIT 00:00 LOC ↻BACKUP INFO ACS550 3304 DRIVE RATING 4A62i 3301 FIRMWARE 300F hex EXIT 00:00
4.	Press EXIT to return to the Copy menu.	LOC ↻COPY MENU 1 UPLOAD TO PANEL BACKUP INFO DOWNLOAD FULL SET DOWNLOAD APPLICATION DOWNLOAD USER SET1 EXIT 00:00 SEL

I/O Settings mode

In the I/O Settings mode, you can:

- check the parameter settings related to any I/O terminal
- edit the parameter setting. For example, if "1103: REF1" is listed under Ain1 (Analog input 1), that is, parameter *1103* REF1 SELECT has value AI1, you can change its value to e.g. AI2. You cannot, however, set the value of parameter *1106* REF2 SELECT to AI1.
- start, stop, change the direction and switch between local and remote control.

How to edit and change parameter settings related to I/O terminals

Step	Action	Display
1.	Go to the Main menu by pressing MENU if you are in the Output mode, otherwise by pressing EXIT repeatedly until you get to the Main menu.	LOC ↻MAIN MENU 1 **PARAMETERS** ASSISTANTS CHANGED PAR EXIT 00:00 ENTER
2.	Go the I/O Settings mode by selecting I/O SETTINGS on the menu with keys ▲ and ▼, and pressing ENTER.	LOC ↻I/O SETTINGS 1 DIGITAL INPUTS (DI) ANALOG INPUTS (AI) RELAY OUTPUTS (ROUT) ANALOG OUTPUTS (AOUT) PANEL EXIT 00:00 SEL
3.	Select the I/O group, e.g. DIGITAL INPUTS, with keys ▲ and ▼, and press SEL. After a brief pause, the display shows the current settings for the selection.	LOC ↻SHOW I/O 1 –DI1– 1001:START/STOP (E1) –DI2– –DI3– EXIT 00:00
4.	Select the setting (line with a parameter number) with keys ▲ and ▼, and press EDIT.	LOC ↻PAR EDIT 1001 EXT1 COMMANDS **DI1** [1] CANCEL 00:00 SAVE
5.	Specify a new value for the setting with keys ▲ and ▼. Pressing the key once increments or decrements the value. Holding the key down changes the value faster. Pressing the keys simultaneously replaces the displayed value with the default value.	LOC ↻PAR EDIT 1001 EXT1 COMMANDS **DI1,2** [2] CANCEL 00:00 SAVE
6.	• To save the new value, press SAVE. • To cancel the new value and keep the original, press CANCEL.	LOC ↻SHOW I/O 1 –DI1– 1001:START/STOP (E1) –DI2– 1001:DIR (E1) –DI3– EXIT 00:00

Basic Control Panel

Features

The Basic Control Panel features:

- numeric control panel with an LCD display
- copy function – parameters can be copied to the control panel memory for later transfer to other drives or for backup of a particular system.

Overview

The following table summarizes the key functions and displays on the Basic Control Panel.

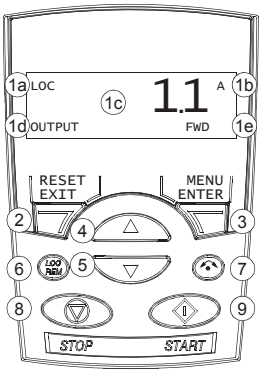

No.	Use
1	LCD display – Divided into five areas: a. Upper left – Control location: LOC: drive control is local, that is, from the control panel REM: drive control is remote, such as the drive I/O or fieldbus. b. Upper right – Unit of the displayed value. c. Center – Variable; in general, shows parameter and signal values, menus or lists. Shows also fault and alarm codes. d. Lower left and center – Panel operation state: OUTPUT: Output mode PAR: Parameter mode MENU: Main menu FAULT: Fault mode. e. Lower right – Indicators: FWD (forward) / REV (reverse): direction of the motor rotation Flashing slowly: stopped Flashing rapidly: running, not at setpoint Steady: running, at setpoint SET: Displayed value can be modified (in the Parameter and Reference modes).
2	RESET/EXIT – Exits to the next higher menu level without saving changed values. Resets faults in the Output and Fault modes.
3	MENU/ENTER – Enters deeper into menu level. In the Parameter mode, saves the displayed value as the new setting.
4	Up – • Scrolls up through a menu or list. • Increases a value if a parameter is selected. • Increases the reference value in the Reference mode. Holding the key down changes the value faster.
5	Down – • Scrolls down through a menu or list. • Decreases a value if a parameter is selected. • Decreases the reference value in the Reference mode. Holding the key down changes the value faster.
6	LOC/REM – Changes between local and remote control of the drive.
7	DIR – Changes the direction of the motor rotation.
8	STOP – Stops the drive in local control.
9	START – Starts the drive in local control.

Operation

You operate the control panel with menus and keys. You select an option, e.g. operation mode or parameter, by scrolling the ▲ and ▼ arrow keys until the option is visible in the display and then pressing the ☐ key.

With the ☐ key, you return to the previous operation level without saving the made changes.

The Basic Control Panel has five panel modes: Output, Reference, Parameter, Copy and Fault. The operation in the first four modes is described in this chapter. When a fault or alarm occurs, the panel goes automatically to the Fault mode showing the fault or alarm code. You can reset the fault or alarm in the Output or Fault mode (see chapter *Diagnostics*).

After the power is switched on, the panel is in the Output mode, where you can start, stop, change the direction, switch between local and remote control and monitor up to three actual values (one at a time). To do other tasks, go first to the Main menu and select the appropriate mode.

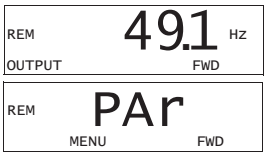

How to do common tasks

The table below lists common tasks, the mode in which you can perform them and the page number where the steps to do the task are described in detail.

Task	Mode	Page
How to switch between local and remote control	Any	*64*
How to start and stop the drive	Any	*64*
How to change the direction of the motor rotation	Any	*64*
How to browse the monitored signals	Output	*65*
How to set the speed, frequency or torque reference	Reference	*66*
How to change the value of a parameter	Parameter	*67*
How to select the monitored signals	Parameter	*68*
How to reset faults and alarms	Output, Fault	*249*
How to copy parameters from the drive to the control panel	Copy	*70*
How to restore parameters from the control panel to the drive	Copy	*70*

How to start, stop and switch between local and remote control

You can start, stop and switch between local and remote control in any mode. To be able to start or stop the drive, the drive must be in local control.

Step	Action	Display
1.	• To switch between remote control (REM shown on the left) and local control (LOC shown on the left), press (LOC/REM). **Note:** Switching to local control can be disabled with parameter *1606* LOCAL LOCK.	LOC 49.1 Hz OUTPUT FWD
	After pressing the key, the display briefly shows message "LoC" or "rE", as appropriate, before returning to the previous display.	LOC LoC FWD
	The very first time the drive is powered up, it is in remote control (REM) and controlled through the drive I/O terminals. To switch to local control (LOC) and control the drive using the control panel, press (LOC/REM). The result depends on how long you press the key: • If you release the key immediately (the display flashes "LoC"), the drive stops. Set the local control reference as instructed on page *66*. • If you press the key for about two seconds (release when the display changes from "LoC" to "LoC r"), the drive continues as before. The drive copies the current remote values for the run/stop status and the reference, and uses them as the initial local control settings.	
	• To stop the drive in local control, press (Stop).	Text FWD or REV on the bottom line starts flashing slowly.
	• To start the drive in local control, press (Start).	Text FWD or REV on the bottom line starts flashing rapidly. It stops flashing when the drive reaches the setpoint.

How to change the direction of the motor rotation

You can change the direction of the motor rotation in any mode.

Step	Action	Display
1.	If the drive is in remote control (REM shown on the left), switch to local control by pressing (LOC/REM). The display briefly shows message "LoC" before returning to the previous display.	LOC 49.1 Hz OUTPUT FWD
2.	To change the direction from forward (FWD shown at the bottom) to reverse (REV shown at the bottom), or vice versa, press (Dir). **Note**: Parameter *1003* DIRECTION must be set to 3 (REQUEST).	LOC 49.1 Hz OUTPUT REV

Output mode

In the Output mode, you can:

- monitor actual values of up to three *Group 01: OPERATING DATA* signals, one signal at a time
- start, stop, change the direction and switch between local and remote control.

You get to the Output mode by pressing ☞ until the display shows text OUTPUT at the bottom.

The display shows the value of one *Group 01: OPERATING DATA* signal. The unit is shown on the right. Page *68* tells how to select up to three signals to be monitored in the Output mode. The table below shows how to view them one at a time.

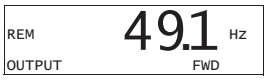

How to browse the monitored signals

Step	Action	Display
1.	If more than one signals have been selected to be monitored (see page *68*), you can browse them in the Output mode. To browse the signals forward, press key ▲ repeatedly. To browse them backward, press key ▼ repeatedly.	REM 49.1 Hz OUTPUT FWD REM 0.5 A OUTPUT FWD REM 10.7 % OUTPUT FWD

Reference mode

In the Reference mode, you can:

- set the speed, frequency or torque reference
- start, stop, change the direction and switch between local and remote control.

How to set the speed, frequency or torque reference

Step	Action	Display
1.	Go to the Main menu by pressing if you are in the Output mode, otherwise by pressing repeatedly until you see MENU at the bottom.	REM PAr MENU FWD
2.	If the drive is in remote control (REM shown on the left), switch to local control by pressing . The display briefly shows "LoC" before switching to local control. **Note**: With *Group 11: REFERENCE SELECT*, you can allow the reference modification in remote control (REM).	LOC PAr MENU FWD
3.	If the panel is not in the Reference mode ("rEF" not visible), press key or until you see "rEF" and then press . Now the display shows the current reference value with SET under the value.	LOC rEF MENU FWD LOC 49.1 Hz SET FWD
4.	• To increase the reference value, press . • To decrease the reference value, press . The value changes immediately when you press the key. It is stored in the drive permanent memory and restored automatically after power switch-off.	LOC 50.0 Hz SET FWD

Parameter mode

In the Parameter mode, you can:

- view and change parameter values
- select and modify the signals shown in the Output mode
- start, stop, change the direction and switch between local and remote control.

How to select a parameter and change its value

Step	Action	Display
1.	Go to the Main menu by pressing MENU if you are in the Output mode, otherwise by pressing MENU repeatedly until you see MENU at the bottom.	LOC rEF MENU FWD
2.	If the panel is not in the Parameter mode ("PAr" not visible), press key ▲ or ▼ until you see "PAr" and then press MENU. The display shows the number of one of the parameter groups.	LOC PAr MENU FWD LOC -01- PAR FWD
3.	Use keys ▲ and ▼ to find the desired parameter group.	LOC -11- PAR FWD
4.	Press MENU. The display shows one of the parameters in the selected group.	LOC 1101 PAR FWD
5.	Use keys ▲ and ▼ to find the desired parameter.	LOC 1103 PAR FWD
6.	Press and hold MENU for about two seconds until the display shows the value of the parameter with SET underneath indicating that changing of the value is now possible. **Note:** When SET is visible, pressing keys ▲ and ▼ simultaneously changes the displayed value to the default value of the parameter.	LOC 1 PAR SET FWD
7.	Use keys ▲ and ▼ to select the parameter value. When you have changed the parameter value, SET starts flashing. • To save the displayed parameter value, press MENU. • To cancel the new value and keep the original, press EXIT.	LOC 2 PAR SET FWD LOC 1103 PAR FWD

How to select the monitored signals

Step	Action	Display
1.	You can select which signals are monitored in the Output mode and how they are displayed with *Group 34: PANEL DISPLAY* parameters. See page *49* for detailed instructions on changing parameter values. By default, you can monitor three signals by browsing (see page *65*). The particular default signals depend on the value of parameter *9902* APPLIC MACRO: For macros whose default value of parameter *9904* MOTOR CTRL MODE is 1 (VECTOR:SPEED), the default for signal 1 is *0102* SPEED, otherwise *0103* OUTPUT FREQ. The defaults for signals 2 and 3 are always *0104* CURRENT and *0105* TORQUE, respectively. To change the default signals, select from *Group 01: OPERATING DATA* up to three signals to be browsed. Signal 1: Change the value of parameter *3401* SIGNAL1 PARAM to the index of the signal parameter in *Group 01: OPERATING DATA* (= number of the parameter without the leading zero), e.g. 105 means parameter *0105* TORQUE. Value 100 means that no signal is displayed. Repeat for signals 2 (*3408* SIGNAL2 PARAM) and 3 (*3415* SIGNAL3 PARAM). For example, if *3401* = 0 and *3415* = 0, browsing is disabled and only the signal specified by *3408* appears in the display. If all three parameters are set to 0, i.e. no signals are selected for monitoring, the panel displays text "n.A".	LOC 103 PAR SET FWD LOC 104 PAR SET FWD LOC 105 PAR SET FWD
2.	Specify the decimal point location, or use the decimal point location and unit of the source signal [setting (9 (DIRECT)]. Bar graphs are not available for Basic Operation Panel. For details, see parameter *3404*. Signal 1: parameter *3404* OUTPUT1 DSP FORM Signal 2: parameter *3411* OUTPUT2 DSP FORM Signal 3: parameter *3418* OUTPUT3 DSP FORM.	LOC 9 PAR SET FWD
3.	Select the units to be displayed for the signals. This has no effect if parameter *3404*/*3411*/*3418* is set to 9 (DIRECT). For details, see parameter *3405*. Signal 1: parameter *3405* OUTPUT1 UNIT Signal 2: parameter *3412* OUTPUT2 UNIT Signal 3: parameter *3419* OUTPUT3 UNIT.	LOC 3 PAR SET FWD
4.	Select the scalings for the signals by specifying the minimum and maximum display values. This has no effect if parameter *3404*/*3411*/*3418* is set to 9 (DIRECT). For details, see parameters *3406* and *3407*. Signal 1: parameters *3406* OUTPUT1 MIN and *3407* OUTPUT1 MAX Signal 2: parameters *3413* OUTPUT2 MIN and *3414* OUTPUT2 MAX Signal 3: parameters *3420* OUTPUT3 MIN and *3421* OUTPUT3 MAX.	LOC 0.0 Hz PAR SET FWD LOC 500.0 Hz PAR SET FWD

Copy mode

The Basic Control Panel can store a full set of drive parameters and up to two user sets of drive parameters to the control panel. The control panel memory is non-volatile.

In the Copy mode, you can:

- copy all parameters from the drive to the control panel (uL – Upload). This includes all defined user sets of parameters and internal (not adjustable by the user) parameters such as those created by the ID Run.
- restore the full parameter set from the control panel to the drive (dL A – Download All). This writes all parameters, including the internal non-user-adjustable motor parameters, to the drive. It does not include the user sets of parameters.

  Note: Only use this function to restore a drive, or to transfer parameters to systems that are identical to the original system.
- copy a partial parameter set from the control panel to a drive (dL P – Download Partial). The partial set does not include user sets, internal motor parameters, parameters *9905*…*9909*, *1605*, *1607*, *5201*, nor any *Group 51: EXT COMM MODULE* and *Group 53: EFB PROTOCOL* parameters.

  The source and target drives and their motor sizes do not need to be the same.
- copy USER S1 parameters from the control panel to the drive (dL u1 – Download User Set 1). A user set includes *Group 99: START-UP DATA* parameters and the internal motor parameters.

  The function is only shown on the menu when User Set 1 has been first saved using parameter *9902* APPLIC MACRO (see section *User parameter sets* on page *81*) and then uploaded to panel.
- copy USER S2 parameters from the control panel to the drive (dL u2 – Download User Set 2). As dL u1 – Download User Set 1 above.
- start, stop, change the direction and switch between local and remote control.

How to upload and download parameters

For the upload and download functions available, see above.

Step	Action	Display
1.	Go to the Main menu by pressing if you are in the Output mode, otherwise by pressing repeatedly until you see MENU at the bottom.	LOC PAr MENU FWD
2.	If the panel is not in the Copy mode ("CoPY" not visible), press key or until you see "CoPY".	LOC CoPY MENU FWD
	Press .	LOC dL u1 MENU FWD
3.	• To upload all parameters (including user sets) from the drive to the control panel, step to "uL" with keys and .	LOC uL MENU FWD
	Press . During the transfer, the display shows the transfer status as a percentage of completion.	LOC uL 50 % FWD
	• To perform downloads, step to the appropriate operation (here "dL A", Download All, is used as an example) with keys and .	LOC dL A MENU FWD
	Press . During the transfer, the display shows the transfer status as a percentage of completion.	LOC dL 50 % FWD

Basic Control Panel alarm codes

In addition to the faults and alarms generated by the drive (see chapter *Diagnostics*), the Basic Control Panel indicates control panel alarms with a code of form A5xxx. See section *Alarm codes (Basic Control Panel)* on page *253* for a list of the alarm codes and descriptions.

Application macros

Macros change a group of parameters to new, predefined values. Use macros to minimize the need for manual editing of parameters. Selecting a macro sets all other parameters to their default values, except:

- *Group 99: START-UP DATA* parameters (except parameter *9904*)
- *1602* PARAMETER LOCK
- *1607* PARAM SAVE
- *3018* COMM FAULT FUNC and *3019* COMM FAULT TIME
- *9802* COMM PROT SEL
- *Group 50: ENCODER* … *Group 53: EFB PROTOCOL* parameters
- *Group 29: MAINTENANCE TRIG* parameters.

After selecting a macro, you can make additional parameter changes manually with the control panel.

You enable application macros by setting the value for parameter *9902* APPLIC MACRO. By default, 1, ABB STANDARD, is the enabled macro.

The following sections describe each of the application macros and provide a connection example for each macro.

The last section in this chapter, *Macro default values for parameters*, lists the parameters that the macros change and the default values established by each macro.

ABB Standard macro

This is the default macro. It provides a general purpose, 2-wire I/O configuration, with three (3) constant speeds. Parameter values are the default values defined in section *Complete parameter list* on page *85*.

Connection example:

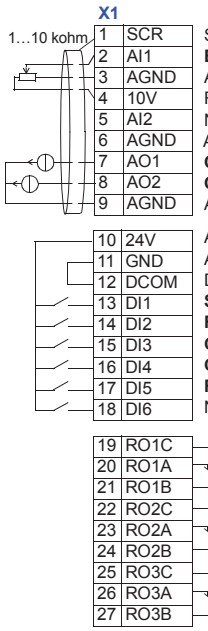

Signal cable shield (screen)
External frequency reference 1: 0…10 V[1]
Analog input circuit common
Reference voltage 10 V DC
Not used
Analog input circuit common
Output frequency: 0…20 mA
Output current: 0…20 mA
Analog output circuit common

Auxiliary voltage output +24 V DC
Auxiliary voltage output common
Digital input common for all
Start/Stop: Activate to start
Fwd/Rev: Activate to reverse rotation direction
Constant speed selection[2]
Constant speed selection[2]
Ramp pair selection: Activate to select 2nd acc/dec ramp pair
Not used

Relay output 1, programmable
Default operation:
Ready =>19 connected to 21

Relay output 2, programmable
Default operation:
Running =>22 connected to 24

Relay output 3, programmable
Default operation:
Fault (-1) =>25 connected to 27
(Fault => 25 connected to 26)

Note 1. The external reference is used as a speed reference if a vector mode is selected.

Note 2. Code:
0 = open, 1 = connected

DI3	DI4	Output
0	0	Reference through AI1
1	0	CONST SPEED 1 (1202)
0	1	CONST SPEED 2 (1203)
1	1	CONST SPEED 3 (1204)

Input signals
- Analog reference (AI1)
- Start, stop and direction (DI1,2)
- Constant speed selection (DI3,4)
- Ramp pair (1 of 2) selection (DI5)

Output signals
- Analog output AO1: Frequency
- Analog output AO2: Current
- Relay output 1: Ready
- Relay output 2: Running
- Relay output 3: Fault (-1)

Jumper setting

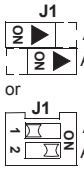

AI1: 0…10 V
AI2: 0(4)…20 mA
or
AI1: 0…10 V
AI2: 0(4)…20 mA

3-wire macro

This macro is used when the drive is controlled using momentary push-buttons. It provides three (3) constant speeds. To enable, set the value of parameter 9902 to 2 (3-WIRE).

Note: When the stop input (DI2) is deactivated (no input), the control panel start/stop buttons are disabled.

Connection example:

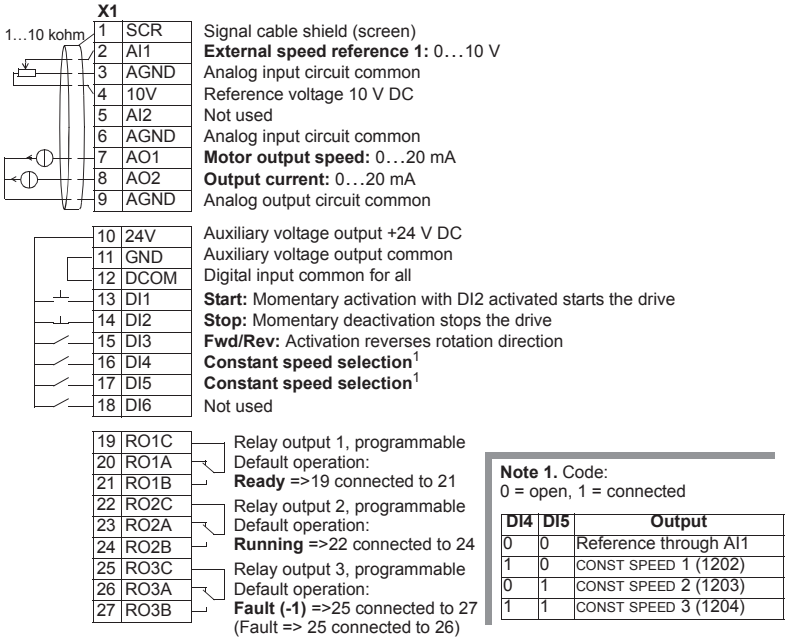

Note 1. Code:
0 = open, 1 = connected

DI4	DI5	Output
0	0	Reference through AI1
1	0	CONST SPEED 1 (1202)
0	1	CONST SPEED 2 (1203)
1	1	CONST SPEED 3 (1204)

Input signals

- Analog reference (AI1)
- Start, stop and direction (DI1,2,3)
- Constant speed selection (DI4,5)

Output signals

- Analog output AO1: Speed
- Analog output AO2: Current
- Relay output 1: Ready
- Relay output 2: Running
- Relay output 3: Fault (-1)

Jumper setting

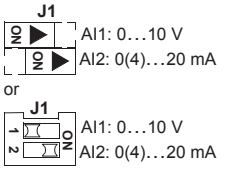

Alternate macro

This macro provides an I/O configuration adopted to a sequence of DI control signals used when alternating the rotation direction of the motor. To enable, set the value of parameter 9902 to 3 (ALTERNATE).

Connection example:

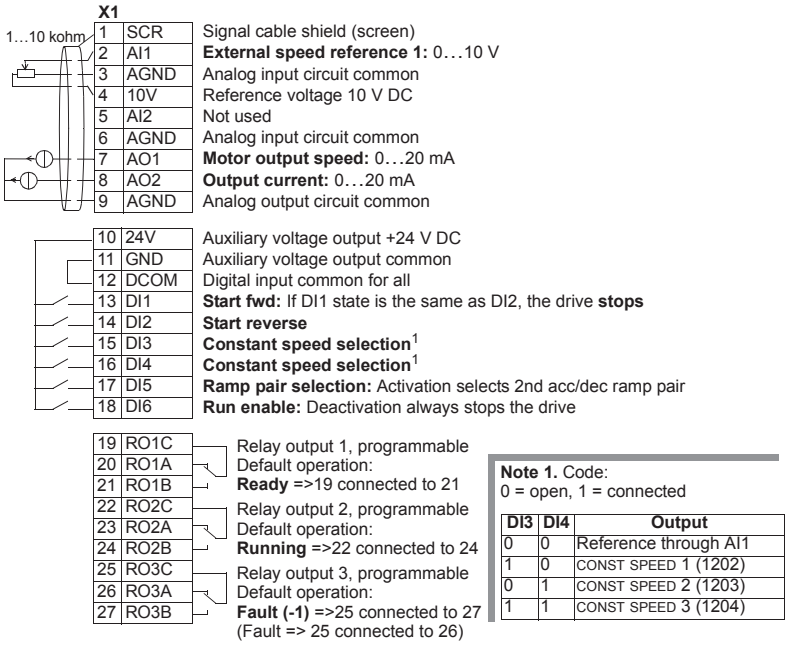

Note 1. Code:
0 = open, 1 = connected

DI3	DI4	Output
0	0	Reference through AI1
1	0	CONST SPEED 1 (1202)
0	1	CONST SPEED 2 (1203)
1	1	CONST SPEED 3 (1204)

Input signals

- Analog reference (AI1)
- Start, stop and direction (DI1,2)
- Constant speed selection (DI3,4)
- Ramp pair 1/2 selection (DI5)
- Run enable (DI6)

Output signals

- Analog output AO1: Speed
- Analog output AO2: Current
- Relay output 1: Ready
- Relay output 2: Running
- Relay output 3: Fault (-1)

Jumper setting

AI1: 0…10 V
AI2: 0(4)…20 mA

or

AI1: 0…10 V
AI2: 0(4)…20 mA

Motor Potentiometer macro

This macro provides a cost-effective interface for PLCs that vary the speed of the motor using only digital signals. To enable, set the value of parameter 9902 to 4 (MOTOR POT).

Connection example:

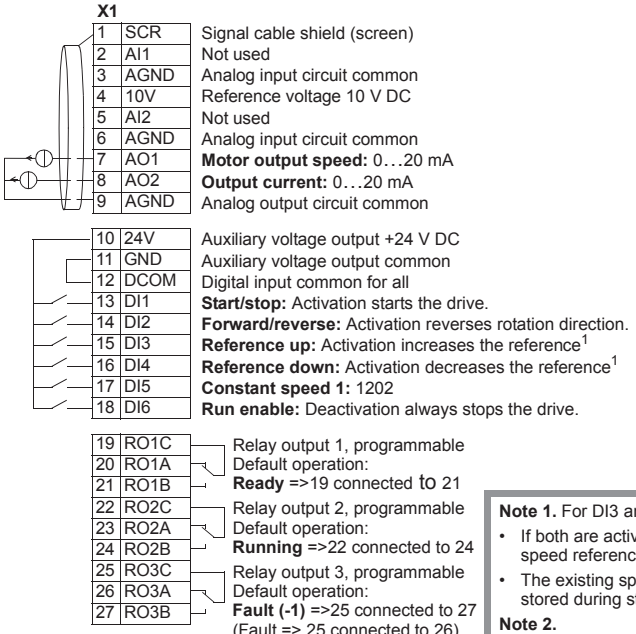

Note 1. For DI3 and DI4:

- If both are active or inactive the speed reference is unchanged.
- The existing speed reference is stored during stop or power down.

Note 2.

- Settings of the ramp times with acceleration and deceleration time 2 (parameters 2205 and 2206).

Input signals

- Start, stop and direction (DI1,2)
- Reference up/down (DI3,4)
- Constant speed selection (DI5)
- Run enable (DI6)

Output signals

- Analog output AO1: Speed
- Analog output AO2: Current
- Relay output 1: Ready
- Relay output 2: Running
- Relay output 3: Fault (-1)

Jumper setting

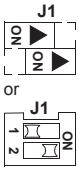

AI1: 0…10 V
AI2: 0(4)…20 mA

or

AI1: 0…10 V
AI2: 0(4)…20 mA

Hand-Auto macro

This macro provides an I/O configuration that is typically used in HVAC applications. To enable, set the value of parameter 9902 to 5 (HAND/AUTO).

Note: Parameter 2108 START INHIBIT must remain in the default setting, 0 (OFF).

Connection example:

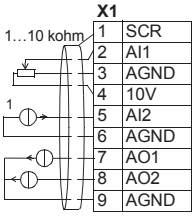

Signal cable shield (screen)
External reference 1: 0…10 V **(Hand Control)**
Analog input circuit common
Reference voltage 10 V DC
External reference 2: 0…20 mA **(Auto Control)**
Analog input circuit common
Motor output speed: 0…20 mA
Output current: 0…20 mA
Analog output circuit common

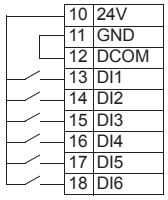

Auxiliary voltage output +24 V DC
Auxiliary voltage output common
Digital input common for all
Start/Stop (Hand): Activation starts the drive
Forward/Reverse (Hand): Activation reverses rotation direction
EXT1/EXT2 Selection: Activation selects auto control
Run enable: Deactivation always stops the drive
Forward/Reverse (Auto): Activation reverses rotation direction
Start/Stop (Auto): Activation starts the drive

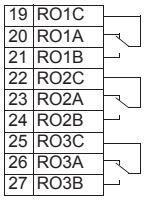

Relay output 1, programmable
Default operation:
Ready =>19 connected to 21
Relay output 2, programmable
Default operation:
Running =>22 connected to 24
Relay output 3, programmable
Default operation:
Fault (-1) =>25 connected to 27
(Fault => 25 connected to 26)

Note 1.
The sensor needs to be powered. See the manufacturer's instructions. A connection example of a two-wire sensor is shown on page *80*.

Input signals
- Two analog references (AI1, 2)
- Start/stop – hand/auto (DI1, 6)
- Direction – hand/auto (DI2, 5)
- Control location selection (DI3)
- Run enable (DI4)

Output signals
- Analog output AO1: Speed
- Analog output AO2: Current
- Relay output 1: Ready
- Relay output 2: Running
- Relay output 3: Fault (-1)

Jumper setting

AI1: 0…10 V
AI2: 0(4)…20 mA

or

AI1: 0…10 V
AI2: 0(4)…20 mA

PID Control macro

This macro provides parameter settings for closed-loop control systems such as pressure control, flow control, etc. To enable, set the value of parameter 9902 to 6 (PID CONTROL).

Note: Parameter 2108 START INHIBIT must remain in the default setting, 0 (OFF).

Connection example:

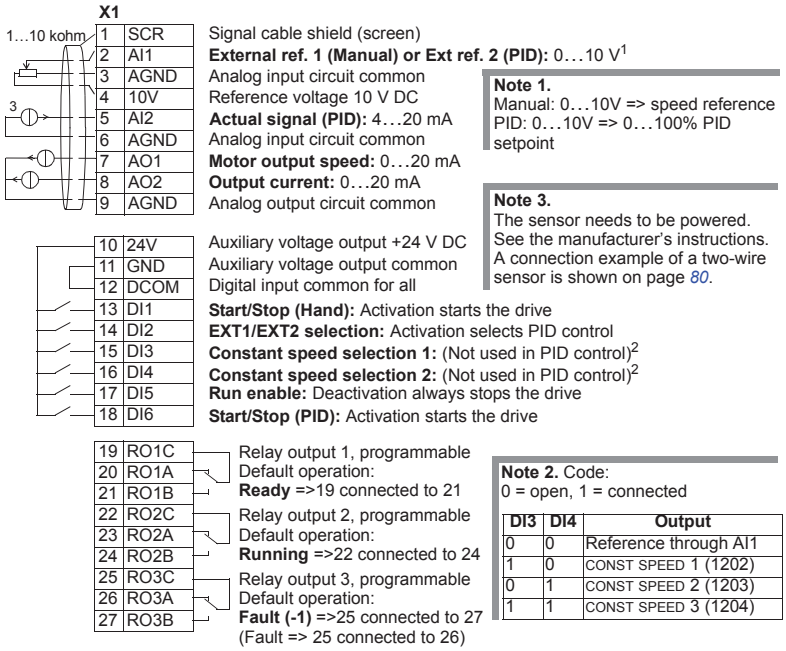

Note 1.
Manual: 0…10V => speed reference
PID: 0…10V => 0…100% PID setpoint

Note 3.
The sensor needs to be powered. See the manufacturer's instructions. A connection example of a two-wire sensor is shown on page *80*.

Note 2. Code:
0 = open, 1 = connected

DI3	DI4	Output
0	0	Reference through AI1
1	0	CONST SPEED 1 (1202)
0	1	CONST SPEED 2 (1203)
1	1	CONST SPEED 3 (1204)

Input signals

- Analog reference (AI1)
- Actual value (AI2)
- Start/stop – hand/PID (DI1, 6)
- EXT1/EXT2 selection (DI2)
- Constant speed selection (DI3, 4)
- Run enable (DI5)

Output signals

- Analog output AO1: Speed
- Analog output AO2: Current
- Relay output 1: Ready
- Relay output 2: Running
- Relay output 3: Fault (-1)

Jumper setting

AI1: 0…10 V
AI2: 0(4)…20 mA

or

AI1: 0…10 V
AI2: 0(4)…20 mA

Note: Use the following switch-on order:

1. EXT1/EXT2
2. Run Enable
3. Start.

PFC macro

This macro provides parameter settings for pump and fan control (PFC) applications. To enable, set the value of parameter 9902 to 7 (PFC CONTROL).

Note: Parameter 2108 START INHIBIT must remain in the default setting, 0 (OFF).

Connection example:

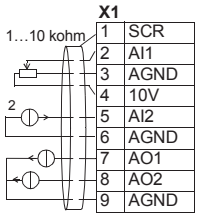

Signal cable shield (screen)
External ref. 1 (Manual) or Ext ref. 2 (PID/PFC): 0…10 V[1]
Analog input circuit common
Reference voltage 10 V DC
Actual signal (PID): 4…20 mA
Analog input circuit common
Output frequency: 0…20 mA
Actual 1 (PI controller actual value): 0(4)…20 mA
Analog output circuit common

Note 1.
Manual: 0…10V => 0…50 Hz
PID/PFC: 0…10V => 0…100%
PID setpoint

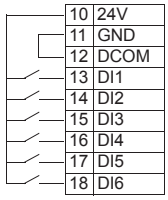

Auxiliary voltage output +24 V DC
Auxiliary voltage output common
Digital input common for all
Start/Stop (Manual): Activation starts the drive
Run enable: Deactivation always stops the drive
EXT1/EXT2 selection: Activation selects PFC control
Interlock: Deactivation always stops the drive
Interlock: Deactivation stops constant speed motor
Start/Stop (PFC): Activation starts the drive

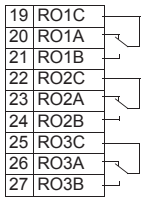

Relay output 1, programmable
Default operation:
Running =>19 connected to 21
Relay output 2, programmable
Default operation:
Fault (-1) =>22 connected to 24 (Fault => 22 connected to 23)
Relay output 3, programmable
Default operation:
Auxiliary motor switched on=>25 connected to 27

Note 2.
The sensor needs to be powered. See the manufacturer's instructions. A connection example of a two-wire sensor is shown on page *80*.

Input signals
- Analog ref. and actual (AI1, 2)
- Start/stop – manual/PFC (DI1, 6)
- Run enable (DI2)
- EXT1/EXT2 selection (DI3)
- Interlock (DI4, 5)

Output signals
- Analog output AO1: Frequency
- Analog output AO2: Actual 1
- Relay output 1: Running
- Relay output 2: Fault (-1)
- Relay output 3: Aux. motor ON

Jumper setting

AI1: 0…10 V
AI2: 0(4)…20 mA

or

AI1: 0…10 V
AI2: 0(4)…20 mA

Note: Use the following switch-on order:
1. EXT1/EXT2
2. Run Enable
3. Start.

Torque Control macro

This macro provides parameter settings for applications that require torque control of the motor. Control can also be switched to speed control. To enable, set the value of parameter 9902 to 8 (TORQUE CTRL).

Connection example:

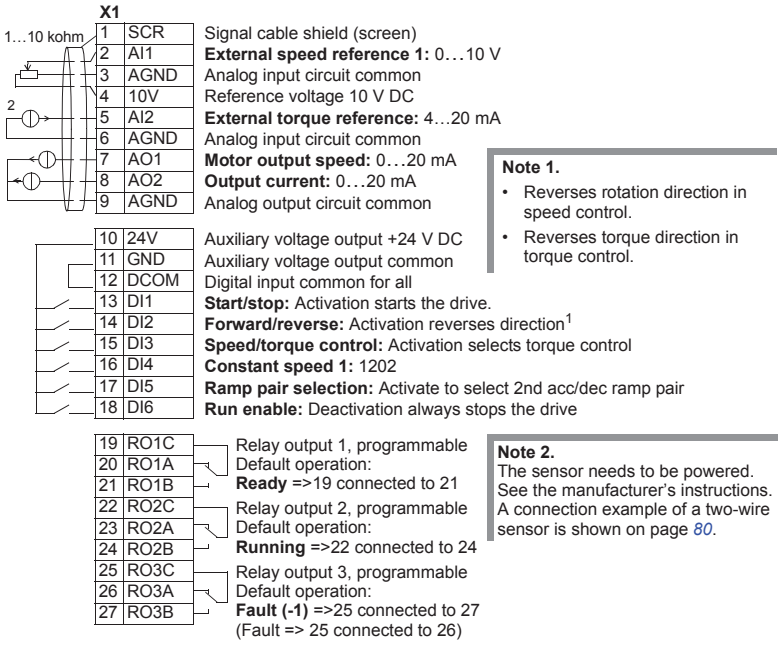

Note 1.

- Reverses rotation direction in speed control.
- Reverses torque direction in torque control.

Note 2.
The sensor needs to be powered. See the manufacturer's instructions. A connection example of a two-wire sensor is shown on page *80*.

Input signals

- Two analog references (AI1, 2)
- Start/stop and direction (DI1, 2)
- Speed/torque control (DI3)
- Constant speed selection (DI4)
- Ramp pair 1/2 selection (DI5)
- Run enable (DI6)

Output signals

- Analog output AO1: Speed
- Analog output AO2: Current
- Relay output 1: Ready
- Relay output 2: Running
- Relay output 3: Fault (-1)

Jumper setting

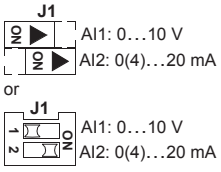

Connection example of a two-wire sensor

Many applications use process PI(D) and need a feedback signal from the process. The feedback signal is typically connected to analog input 2 (AI2). The macro wiring diagrams in this chapter show the connection when a separately powered sensor is used. The figure below gives an example of a connection using a two-wire sensor.

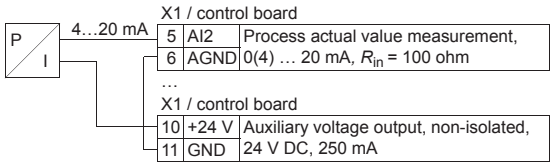

Note: The sensor is supplied through its current output. Thus the output signal must be 4…20 mA, not 0…20 m A.

User parameter sets

In addition to the standard application macros, it is possible to save two user parameter sets into the permanent memory and load them at a later time. A user parameter set consists of the user parameter settings, including *Group 99: START-UP DATA*, and the results of the motor identification. The panel reference is also saved if the user parameter set is saved and loaded in local control. The remote control setting is saved into the user parameter set, but the local control setting is not.

The steps below show how to save and load User Parameter Set 1. The procedure for User Parameter Set 2 is identical, only the parameter *9902* values are different.

To save User Parameter Set 1:

- Adjust the parameters. Perform the motor identification if it is needed in the application but it is not done yet.
- Save the parameter settings and the results of the motor identification to the permanent memory by changing parameter *9902* to -1 (USER S1 SAVE).
- Press SAVE (Assistant Control Panel) or MENU ENTER (Basic Control Panel).

To load User Parameter Set 1:

- Change parameter *9902* to 0 (USER S1 LOAD).
- Press SAVE (Assistant Control Panel) or MENU ENTER (Basic Control Panel) to load.

The user parameter set can also be switched through digital inputs (see parameter *1605*).

Note: Loading the user parameter set restores the parameter settings including *Group 99: START-UP DATA* and the results of the motor identification. Check that the settings correspond to the motor used.

Hint: The user can for example switch the drive between two motors without having to adjust the motor parameters and to repeat the motor identification every time the motor is changed. The user needs only to adjust the settings and perform the motor identification once for each motor and then to save the data as two user parameter sets. When the motor is changed, only the corresponding user parameter set needs to be loaded, and the drive is ready to operate.

Macro default values for parameters

Parameter default values are listed in section *Complete parameter list* on page *85*. Changing from the default macro (ABB Standard), that is, editing the value of parameter 9902, changes the parameter default values as defined in the following tables.

Note: There are two sets of values because the defaults are configured for 50 Hz/ IEC compliance (ACS550-01) and 60 Hz/NEMA compliance (ACS550-U1).

ACS550-01

Parameter		ABB Standard	3-wire	Alternate	Motor Potentiometer	Hand-auto	PID Control	PFC Control	Torque Control
9902	APPLIC MACRO	1	2	3	4	5	6	7	8
9904	MOTOR CTRL MODE	3	1	1	1	1	1	3	2
1001	EXT1 COMMANDS	2	4	9	2	2	1	1	2
1002	EXT2 COMMANDS	0	0	0	0	7	6	6	2
1003	DIRECTION	3	3	3	3	3	1	1	3
1102	EXT1/EXT2 SEL	0	0	0	0	3	2	3	3
1103	REF1 SELECT	1	1	1	12	1	1	1	1
1106	REF2 SELECT	2	2	2	2	2	19	19	2
1201	CONST SPEED SEL	9	10	9	5	0	9	0	4
1304	MINIMUM AI2	0	0	0	0	20	20	20	20
1401	RELAY OUTPUT 1	1	1	1	1	1	1	2	1
1402	RELAY OUTPUT 2	2	2	2	2	2	2	3	2
1403	RELAY OUTPUT 3	3	3	3	3	3	3	31	3
1501	AO1 CONTENT SEL	103	102	102	102	102	102	103	102
1503	AO1 CONTENT MAX	50	50	50	50	50	50	52	50
1507	AO2 CONTENT SEL	104	104	104	104	104	104	130	104
1510	MINIMUM AO2	0	0	0	0	0	0	4	0
1601	RUN ENABLE	0	0	6	6	4	5	2	6
2008	MAXIMUM FREQ	50	50	50	50	50	50	52	50
2201	ACC/DEC 1/2 SEL	5	0	5	0	0	0	0	5
3201	SUPERV 1 PARAM	103	102	102	102	102	102	103	102
3401	SIGNAL1 PARAM	103	102	102	102	102	102	103	102
4001	GAIN	10	10	10	10	10	10	25	10
4002	INTEGRATION TIME	60	60	60	60	60	60	3	60
4101	GAIN	1	1	1	1	1	1	2,5	1
4102	INTEGRATION TIME	60	60	60	60	60	60	3	60
8123	PFC ENABLE	0	0	0	0	0	0	1	0

ACS550-U1

Parameter		ABB Standard	3-wire	Alternate	Motor Potentiometer	Hand-auto	PID Control	PFC Control	Torque Control
9902	APPLIC MACRO	1	2	3	4	5	6	7	8
9904	MOTOR CTRL MODE	3	1	1	1	1	1	3	2
1001	EXT1 COMMANDS	2	4	9	2	2	1	1	2
1002	EXT2 COMMANDS	0	0	0	0	7	6	6	2
1003	DIRECTION	3	3	3	3	3	1	1	3
1102	EXT1/EXT2 SEL	0	0	0	0	3	2	3	3
1103	REF1 SELECT	1	1	1	12	1	1	1	1
1106	REF2 SELECT	2	2	2	2	2	19	19	2
1201	CONST SPEED SEL	9	10	9	5	0	9	0	4
1304	MINIMUM AI2	0	0	0	0	20	20	20	20
1401	RELAY OUTPUT 1	1	1	1	1	1	1	2	1
1402	RELAY OUTPUT 2	2	2	2	2	2	2	3	2
1403	RELAY OUTPUT 3	3	3	3	3	3	3	31	3
1501	AO1 CONTENT SEL	103	102	102	102	102	102	103	102
1503	AO1 CONTENT MAX	60	60	60	60	60	60	62	60
1507	AO2 CONTENT SEL	104	104	104	104	104	104	130	104
1510	MINIMUM AO2	0	0	0	0	0	0	4	0
1601	RUN ENABLE	0	0	6	6	4	5	2	6
2008	MAXIMUM FREQ	60	60	60	60	60	60	62	60
2201	ACC/DEC 1/2 SEL	5	0	5	0	0	0	0	5
3201	SUPERV 1 PARAM	103	102	102	102	102	102	103	102
3401	SIGNAL1 PARAM	103	102	102	102	102	102	103	102
4001	GAIN	10	10	10	10	10	10	25	10
4002	INTEGRATION TIME	60	60	60	60	60	60	3	60
4101	GAIN	1	1	1	1	1	1	2,5	1
4102	INTEGRATION TIME	60	60	60	60	60	60	3	60
8123	PFC ENABLE	0	0	0	0	0	0	1	0

Parameters

Complete parameter list

The following table lists all parameters. Table header abbreviations are:

- S = Parameters can be modified only when the drive is stopped.
- User = Space to enter desired parameter values.

Some values depend on the "construction" as indicated in the table by "01:" or "U1:". Refer to the type code on the drive, for example ACS550-**01**..

Code	Name	Range	Resolution	Default	User	S
Group 99: START-UP DATA						
9901	LANGUAGE	0…15 / 0…3	1	0 (ENGLISH)		
9902	APPLIC MACRO	-3…8, 31	1	1 (ABB STANDARD)		✓
9904	MOTOR CTRL MODE	1 = VECTOR:SPEED, 2 = VECTOR:TORQUE, 3 = SCALAR:FREQ	1	3 (SCALAR:FREQ)		✓
9905	MOTOR NOM VOLT	115…345 V	1 V	230 V		✓
		01: 200…600 V / U1: 230…690 V	1 V	01: 400 V / U1: 460 V		✓
		U1: 288…862 V	1 V	U1: 575 V		✓
9906	MOTOR NOM CURR	0.2 · I_{2hd} … 2.0 · I_{2hd}	0.1 A	1.0 · I_{2hd}		✓
9907	MOTOR NOM FREQ	10.0.0…500.0 Hz	0.1 Hz	01: 50.0 Hz / U1: 60.0 Hz		✓
9908	MOTOR NOM SPEED	50…30000 rpm	1 rpm	Size dependent		✓
9909	MOTOR NOM POWER	0.2…3.0 · P_{hd}	01: 0.1 kW / U1: 0.1 hp	1.0 · P_{hd}		✓
9910	ID RUN	0 = OFF/IDMAGN, 1 = ON	1	0 (OFF/IDMAGN)		✓
Group 01: OPERATING DATA						
0101	SPEED & DIR	-30000…30000 rpm	1 rpm	-		
0102	SPEED	0…30000 rpm	1 rpm	-		
0103	OUTPUT FREQ	0.0…500.0 Hz	0.1 Hz	-		
0104	CURRENT	0.0…2.0 · I_{2hd}	0.1 A	-		
0105	TORQUE	-200.0…200.0%	0.1%	-		
0106	POWER	-2.0…2.0 · P_{hd}	0.1 kW	-		
0107	DC BUS VOLTAGE	0…2.5 · V_{dN}	1 V	-		
0109	OUTPUT VOLTAGE	0…2.0 · V_{dN}	1 V	-		
0110	DRIVE TEMP	0.0…150.0 °C	0.1 °C	-		
0111	EXTERNAL REF 1	0…30000 rpm / 0.0…500.0 Hz	1 rpm / 0.1 Hz	-		
0112	EXTERNAL REF 2	0.0…100.0% (0.0…600.0% for torque)	0.1%	-		
0113	CTRL LOCATION	0 = LOCAL, 1 = EXT1, 2 = EXT2	1	-		
0114	RUN TIME (R)	0…9999 h	1 h	0 h		
0115	KWH COUNTER (R)	0…9999 kWh	1 kWh	-		
0116	APPL BLK OUTPUT	0.0…100.0% (0.0…600.0% for torque)	0.1%	-		
0118	DI 1-3 STATUS	000…111 (0…7 decimal)	1	-		

Code	Name	Range	Resolution	Default	User	S
0119	DI 4-6 STATUS	000…111 (0…7 decimal)	1	-		
0120	AI 1	0.0…100.0%	0.1%	-		
0121	AI 2	0.0…100.0%	0.1%	-		
0122	RO 1-3 STATUS	000…111 (0…7 decimal)	1	-		
0123	RO 4-6 STATUS	000…111 (0…7 decimal)	1	-		
0124	AO 1	0.0…20.0 mA	0.1 mA	-		
0125	AO 2	0.0…20.0 mA	0.1 mA	-		
0126	PID 1 OUTPUT	-1000.0…1000.0%	0.1%	-		
0127	PID 2 OUTPUT	-100.0…100.0%	0.1%	-		
0128	PID 1 SETPNT	Unit and scale defined by par. 4006/ 4106 and 4007/4107	-	-		
0129	PID 2 SETPNT	Unit and scale defined by par. 4206 and 4207		-		
0130	PID 1 FBK	Unit and scale defined by par. 4006/ 4106 and 4007/4107	-	-		
0131	PID 2 FBK	Unit and scale defined by par. 4206 and 4207	-	-		
0132	PID 1 DEVIATION	Unit and scale defined by par. 4006/ 4106 and 4007/4107	-	-		
0133	PID 2 DEVIATION	Unit and scale defined by par. 4206 and 4207	-	-		
0134	COMM RO WORD	0…65535	1	0		
0135	COMM VALUE 1	-32768…+32767	1	0		
0136	COMM VALUE 2	-32768…+32767	1	0		
0137	PROCESS VAR 1	-	1			
0138	PROCESS VAR 2	-	1			
0139	PROCESS VAR 3	-	1			
0140	RUN TIME	0.00…499.99 kh	0.01 kh	0.00 kh		
0141	MWH COUNTER	0…9999 MWh	1 MWh	-		
0142	REVOLUTION CNTR	0…65535 Mrev	1 Mrev	0		
0143	DRIVE ON TIME HI	0…65535 days	1 day	0		
0144	DRIVE ON TIME LO	00:00:00…23:59:58	1 = 2 s	0		
0145	MOTOR TEMP	Par. 3501 = 1…3: -10…200 °C Par. 3501 = 4: 0…5000 ohm Par. 3501 = 5…6: 0…1	1	-		
0146	MECH ANGLE	0…32768	1	-		
0147	MECH REVS	-32768 …+32767	1	-		
0148	Z PLS DETECTED	0 = NOT DETECTED, 1 = DETECTED	1 (DETECTED)	-		
0150	CB TEMP	-20.0…150.0 °C	1.0 °C	-		
0151	INPUT KWH (R)	0.0…999.9 kWh	1.0 kWh	-		
0152	INPUT MWH	0…9999 MWh	1 MWh	-		
0158	PID COMM VALUE 1	-32768 …+32767	1	-		
0159	PID COMM VALUE 2	-32768 …+32767	1	-		
Group 03: FB ACTUAL SIGNALS						
0301	FB CMD WORD 1	-	-	-		
0302	FB CMD WORD 2	-	-	-		
0303	FB STS WORD 1	-	-	-		

Code	Name	Range	Resolution	Default	User	S
0304	FB STS WORD 2	-	1	0		
0305	FAULT WORD 1	-	1	0		
0306	FAULT WORD 2	-	1	0		
0307	FAULT WORD 3	-	1	0		
0308	ALARM WORD 1	-	1	0		
0309	ALARM WORD 2	-	1	0		
Group 04: FAULT HISTORY						
0401	LAST FAULT	Fault codes (panel displays as text)	1	0		
0402	FAULT TIME 1	Date dd.mm.yy / power-on time in days	1 day	0		
0403	FAULT TIME 2	Time hh.mm.ss	2 s	0		
0404	SPEED AT FLT	-32768…+32767	1 rpm	0		
0405	FREQ AT FLT	-3276.8…+3276.7	0.1 Hz	0		
0406	VOLTAGE AT FLT	0.0…6553.5	0.1 V	0		
0407	CURRENT AT FLT	0.0…6553.5	0.1 A	0		
0408	TORQUE AT FLT	-3276.8…+3276.7	0.1%	0		
0409	STATUS AT FLT	0…0xFFFF (hex)	1	0		
0410	DI 1-3 AT FLT	000…111 (0…7 decimal)	1	0		
0411	DI 4-6 AT FLT	000…111 (0…7 decimal)	1	0		
0412	PREVIOUS FAULT 1	As par. 0401	1	0		
0413	PREVIOUS FAULT 2	As par. 0401	1	0		
Group 10: START/STOP/DIR						
1001	EXT1 COMMANDS	0…14	1	2 (DI1,2)		✓
1002	EXT2 COMMANDS	0…14	1	0 (NOT SEL)		✓
1003	DIRECTION	1 = FORWARD, 2 = REVERSE, 3 = REQUEST	1	3 (REQUEST)		✓
1004	JOGGING SEL	-6…6	1	0 (NOT SEL)		✓
Group 11: REFERENCE SELECT						
1101	KEYPAD REF SEL	1 = REF1(Hz/rpm), 2 = REF2(%)	1	1 [REF1(Hz/rpm)]		
1102	EXT1/EXT2 SEL	-6…12	1	0 (EXT1)		✓
1103	REF1 SELECT	0…17, 20…21	1	1 (KEYPAD)		✓
1104	REF1 MIN	0.0…500.0 Hz / 0…30000 rpm	0.1 Hz / 1 rpm	0.0 Hz / 0 rpm		
1105	REF1 MAX	0.0…500.0 Hz / 0…30000 rpm	0.1 Hz / 1 rpm	01: 50.0 Hz / 1500 rpm U1: 60.0 Hz / 1800 rpm		
1106	REF2 SELECT	0…17, 19…21	1	2 (AI2)		✓
1107	REF2 MIN	0.0…100.0% (0.0…600.0% for torque)	0.1%	0.0%		
1108	REF2 MAX	0.0…100.0% (0.0…600.0% for torque)	0.1%	100.0%		
Group 12: CONSTANT SPEEDS						
1201	CONST SPEED SEL	-14 …19	1	9 (DI3,4)		✓
1202	CONST SPEED 1	0…30000 rpm / 0.0…500.0 Hz	1 rpm / 0.1 Hz	01: 300 rpm / 5.0 Hz U1: 360 rpm / 6.0 Hz		
1203	CONST SPEED 2	0…30000 rpm / 0.0…500.0 Hz	1 rpm / 0.1 Hz	01: 600 rpm / 10.0 Hz U1: 720 rpm / 12.0 Hz		
1204	CONST SPEED 3	0…30000 rpm / 0.0…500.0 Hz	1 rpm / 0.1 Hz	01: 900 rpm / 15.0 Hz U1: 1080 rpm / 18.0 Hz		
1205	CONST SPEED 4	0…30000 rpm / 0.0…500.0 Hz	1 rpm / 0.1 Hz	01: 1200 rpm / 20.0 Hz U1: 1440 rpm / 24.0 Hz		

Code	Name	Range	Resolution	Default	User	S
1206	CONST SPEED 5	0…30000 rpm / 0.0…500.0 Hz	1 rpm / 0.1 Hz	01: 1500 rpm / 25.0 Hz U1: 1800 rpm / 30.0 Hz		
1207	CONST SPEED 6	0…30000 rpm / 0.0…500.0 Hz	1 rpm / 0.1 Hz	01: 2400 rpm / 40.0 Hz U1: 2880 rpm / 48.0 Hz		
1208	CONST SPEED 7	0…30000 rpm / 0.0…500.0 Hz	1 rpm / 0.1 Hz	01: 3000 rpm / 50.0 Hz U1: 3600 rpm / 60.0 Hz		
1209	TIMED MODE SEL	1 = EXT/CS1/2/3, 2 = CS1/2/3/4	1	2 (CS1/2/3/4)		✓
Group 13: ANALOG INPUTS						
1301	MINIMUM AI1	0.0…100.0%	0.1%	0.0%		
1302	MAXIMUM AI1	0.0…100.0%	0.1%	100.0%		
1303	FILTER AI1	0.0…10.0 s	0.1 s	0.1 s		
1304	MINIMUM AI2	0.0…100.0%	0.1%	0.0%		
1305	MAXIMUM AI2	0.0…100.0%	0.1%	100.0%		
1306	FILTER AI2	0.0…10.0 s	0.1 s	0.1 s		
Group 14: RELAY OUTPUTS						
1401	RELAY OUTPUT 1	0…47, 52	1	1 (READY)		
1402	RELAY OUTPUT 2	0…47, 52	1	2 (RUN)		
1403	RELAY OUTPUT 3	0…47, 52	1	3 [FAULT(-1)]		
1404	RO 1 ON DELAY	0.0…3600.0 s	0.1 s	0.0 s		
1405	RO 1 OFF DELAY	0.0…3600.0 s	0.1 s	0.0 s		
1406	RO 2 ON DELAY	0.0…3600.0 s	0.1 s	0.0 s		
1407	RO 2 OFF DELAY	0.0…3600.0 s	0.1 s	0.0 s		
1408	RO 3 ON DELAY	0.0…3600.0 s	0.1 s	0.0 s		
1409	RO 3 OFF DELAY	0.0…3600.0 s	0.1 s	0.0 s		
1410	RELAY OUTPUT 4	0…46, 52	1	0 (NOT SEL)		
1411	RELAY OUTPUT 5	0…46, 52	1	0 (NOT SEL)		
1412	RELAY OUTPUT 6	0…46, 52	1	0 (NOT SEL)		
1413	RO 4 ON DELAY	0.0…3600.0 s	0.1 s	0.0 s		
1414	RO 4 OFF DELAY	0.0…3600.0 s	0.1 s	0.0 s		
1415	RO 5 ON DELAY	0.0…3600.0 s	0.1 s	0.0 s		
1416	RO 5 OFF DELAY	0.0…3600.0 s	0.1 s	0.0 s		
1417	RO 6 ON DELAY	0.0…3600.0 s	0.1 s	0.0 s		
1418	RO 6 OFF DELAY	0.0…3600.0 s	0.1 s	0.0 s		
Group 15: ANALOG OUTPUTS						
1501	AO1 CONTENT SEL	99…159	1	103 (parameter 0103 OUTPUT FREQ)		
1502	AO1 CONTENT MIN	-	-	Defined by par. 0103		
1503	AO1 CONTENT MAX	-	-	Defined by par. 0103		
1504	MINIMUM AO1	0.0…20.0 mA	0.1 mA	0.0 mA		
1505	MAXIMUM AO1	0.0…20.0 mA	0.1 mA	20.0 mA		
1506	FILTER AO1	0.0…10.0 s	0.1 s	0.1 s		
1507	AO2 CONTENT SEL	99…159	1	104 (parameter 0104 CURRENT)		
1508	AO2 CONTENT MIN	-	-	Defined by par. 0104		
1509	AO2 CONTENT MAX	-	-	Defined by par. 0104		
1510	MINIMUM AO2	0.0…20.0 mA	0.1 mA	0.0 mA		

Code	Name	Range	Resolution	Default	User	S
1511	MAXIMUM AO2	0.0…20.0 mA	0.1 mA	20.0 mA		
1512	FILTER AO2	0.0…10.0 s	0.1 s	0.1 s		
Group 16: SYSTEM CONTROLS						
1601	RUN ENABLE	-6…7	1	0 (NOT SEL)		✓
1602	PARAMETER LOCK	0 = LOCKED, 1 = OPEN, 2 = NOT SAVED	1	1 (OPEN)		
1603	PASS CODE	0…65535	1	0		
1604	FAULT RESET SEL	-6…8	1	0 (KEYPAD)		
1605	USER PAR SET CHG	-6…6	1	0 (NOT SEL)		
1606	LOCAL LOCK	-6…8	1	0 (NOT SEL)		
1607	PARAM SAVE	0 = DONE, 1 = SAVE…	1	0 (DONE)		
1608	START ENABLE 1	-6…7	1	0 (NOT SEL)		✓
1609	START ENABLE 2	-6…7	1	0 (NOT SEL)		✓
1610	DISPLAY ALARMS	0 = NO, 1 = YES	1	0 (NO)		
1611	PARAMETER VIEW	0 = DEFAULT, 1 = FLASHDROP	1	0 (DEFAULT)		
Group 20: LIMITS						
2001	MINIMUM SPEED	-30000…30000 rpm	1 rpm	0 rpm		✓
2002	MAXIMUM SPEED	0…30000 rpm	1 rpm	01: 1500 rpm / U1: 1800 rpm		✓
2003	MAX CURRENT	0… 1.8 · I_{2hd}	0.1 A	1.8 · I_{2hd}		✓
2005	OVERVOLT CTRL	0 = DISABLE, 1 = ENABLE	1	1 (ENABLE)		
2006	UNDERVOLT CTRL	0 = DISABLE, 1 = ENABLE(TIME), 2 = ENABLE	1	1 [ENABLE(TIME)]		
2007	MINIMUM FREQ	-500.0…500.0 Hz	0.1 Hz	0.0 Hz		✓
2008	MAXIMUM FREQ	0.0…500.0 Hz	0.1 Hz	01: 50.0 Hz / U1: 60.0 Hz		✓
2013	MIN TORQUE SEL	-6…7	1	0 (MIN TORQUE 1)		
2014	MAX TORQUE SEL	-6…7	1	0 (MAX TORQUE 1)		
2015	MIN TORQUE 1	-600.0…0.0%	0.1%	-300.0%		
2016	MIN TORQUE 2	-600.0…0.0%	0.1%	-300.0%		
2017	MAX TORQUE 1	0.0…600.0%	0.1%	300.0%		
2018	MAX TORQUE 2	0.0…600.0%	0.1%	300.0%		
Group 21: START/STOP						
2101	START FUNCTION	Vector control modes: 1, 2, 8 Scalar control mode: 1…5, 8	1	8 (RAMP)		✓
2102	STOP FUNCTION	1 = COAST, 2 = RAMP	1	1 (COAST)		
2103	DC MAGN TIME	0.00…10.00 s	0.01 s	0.30 s		
2104	DC HOLD CTL	0 = NOT SEL, 1 = DC HOLD, 2 = DC BRAKING	1	0 (NOT SEL)		✓
2105	DC HOLD SPEED	0…360 rpm	1 rpm	5 rpm		
2106	DC CURR REF	0…100%	1%	30%		
2107	DC BRAKE TIME	0.0…250.0 s	0.1 s	0.0 s		
2108	START INHIBIT	0 = OFF, 1 = ON	1	0 (OFF)		
2109	EMERG STOP SEL	-6…6	1	0 (NOT SEL)		
2110	TORQ BOOST CURR	15…300%	1%	100%		
2112	ZERO SPEED DELAY	0.0 = NOT SEL, 0.1…60.0 s	0.1 s	0.0 s (NOT SEL)		
2113	START DELAY	0.00…60.00 s	0.01 s	0.00 s		

Code	Name	Range	Resolution	Default	User	S
Group 22: ACCEL/DECEL						
2201	ACC/DEC 1/2 SEL	-6…7	1	5 (DI5)		
2202	ACCELER TIME 1	0.0…1800.0 s	0.1 s	5.0 s		
2203	DECELER TIME 1	0.0…1800.0 s	0.1 s	5.0 s		
2204	RAMP SHAPE 1	0.0 = LINEAR, 0.1…1000.0 s	0.1 s	0.0 s		
2205	ACCELER TIME 2	0.0…1800.0 s	0.1 s	60.0 s		
2206	DECELER TIME 2	0.0…1800.0 s	0.1 s	60.0 s		
2207	RAMP SHAPE 2	0.0 = LINEAR, 0.1…1000.0 s	0.1 s	0.0 s		
2208	EMERG DEC TIME	0.0…1800.0 s	0.1 s	1.0 s		
2209	RAMP INPUT 0	-6…7	1	0 (NOT SEL)		
Group 23: SPEED CONTROL						
2301	PROP GAIN	0.00…200.00	0.01	10.00		
2302	INTEGRATION TIME	0.00…600.00 s	0.01 s	2.50 s		
2303	DERIVATION TIME	0…10000 ms	1 ms	0 ms		
2304	ACC COMPENSATION	0.00…600.00 s	0.01 s	0.00 s		
2305	AUTOTUNE RUN	0 = OFF, 1 = ON	1	0 (OFF)		
Group 24: TORQUE CONTROL						
2401	TORQ RAMP UP	0.00…120.00 s	0.01 s	0.00 s		
2402	TORQ RAMP DOWN	0.00…120.00 s	0.01 s	0.00 s		
Group 25: CRITICAL SPEEDS						
2501	CRIT SPEED SEL	0 = OFF, 1 = ON	1	0 (OFF)		
2502	CRIT SPEED 1 LO	0…30000 rpm / 0.0…500.0 Hz	1 rpm / 0.1 Hz	0 rpm / 0.0 Hz		
2503	CRIT SPEED 1 HI	0…30000 rpm / 0.0…500.0 Hz	1 rpm / 0.1 Hz	0 rpm / 0.0 Hz		
2504	CRIT SPEED 2 LO	0…30000 rpm / 0.0…500.0 Hz	1 rpm / 0.1 Hz	0 rpm / 0.0 Hz		
2505	CRIT SPEED 2 HI	0…30000 rpm / 0.0…500.0 Hz	1 rpm / 0.1 Hz	0 rpm / 0.0 Hz		
2506	CRIT SPEED 3 LO	0…30000 rpm / 0.0…500.0 Hz	1 rpm / 0.1 Hz	0 rpm / 0.0 Hz		
2507	CRIT SPEED 3 HI	0…30000 rpm / 0.0…500.0 Hz	1 rpm / 0.1 Hz	0 rpm / 0.0 Hz		
Group 26: MOTOR CONTROL						
2601	FLUX OPT ENABLE	0 = OFF, 1 = ON	1	0 (OFF)		
2602	FLUX BRAKING	0 = OFF, 1 = ON	1	0 (OFF)		
2603	IR COMP VOLT	0.0…100.0 V	0.1 V	Size dependent		
2604	IR COMP FREQ	0…100%	1%	80%		
2605	U/F RATIO	1 = LINEAR, 2 = SQUARED	1	1 (LINEAR)		
2606	SWITCHING FREQ	1, 4, 8, 12 kHz	-	4 kHz		
2607	SWITCH FREQ CTRL	0 = OFF, 1 = ON	1	1 (ON)		
2608	SLIP COMP RATIO	0…200%	1%	0		
2609	NOISE SMOOTHING	0 = DISABLE, 1 = ENABLE	1	0 (DISABLE)		
2619	DC STABILIZER	0 = DISABLE, 1 = ENABLE	1	0 (DISABLE)		
Group 29: MAINTENANCE TRIG						
2901	COOLING FAN TRIG	0.0…6553.5 kh, 0.0 disables	0.1 kh	0.0 kh		
2902	COOLING FAN ACT	0.0…6553.5 kh	0.1 kh	0.0 kh		
2903	REVOLUTION TRIG	0…65535 Mrev, 0 disables	1 Mrev	0 Mrev		
2904	REVOLUTION ACT	0…65535 Mrev	1 Mrev	0 Mrev		
2905	RUN TIME TRIG	0.0…6553.5 kh, 0.0 disables	0.1 kh	0.0 kh		
2906	RUN TIME ACT	0.0…6553.5 kh	0.1 kh	0.0 kh		

Code	Name	Range	Resolution	Default	User	S
2907	USER MWh TRIG	0.0…6553.5 MWh, 0.0 disables	0.1 MWh	0.0 MWh		
2908	USER MWh ACT	0.0…6553.5 MWh	0.1 MWh	0.0 MWh		
Group 30: FAULT FUNCTIONS						
3001	AI<MIN FUNCTION	0…3	1	0 (NOT SEL)		
3002	PANEL COMM ERR	1…3	1	1 (FAULT)		
3003	EXTERNAL FAULT 1	-6…6	1	0 (NOT SEL)		
3004	EXTERNAL FAULT 2	-6…6	1	0 (NOT SEL)		
3005	MOT THERM PROT	0 = NOT SEL, 1 = FAULT, 2 = ALARM	1	1 (FAULT)		
3006	MOT THERM TIME	256…9999 s	1	500 s		
3007	MOT LOAD CURVE	50…150%	1	100%		
3008	ZERO SPEED LOAD	25…150%	1	70%		
3009	BREAK POINT FREQ	1…250 Hz	1	35 Hz		
3010	STALL FUNCTION	0 = NOT SEL, 1 = FAULT, 2 = ALARM	1	0 (NOT SEL)		
3011	STALL FREQUENCY	0.5…50 Hz	0.1 Hz	20 Hz		
3012	STALL TIME	10…400 s	1 s	20 s		
3017	EARTH FAULT	0 = DISABLE, 1 = ENABLE	1	1 (ENABLE)		✓
3018	COMM FAULT FUNC	0 = NOT SEL, 1 = FAULT, 2 = CONST SP 7, 3 = LAST SPEED	1	0 (NOT SEL)		
3019	COMM FAULT TIME	0…60.0 s	0.1 s	3.0 s		
3021	AI1 FAULT LIMIT	0…100%	0.1%	0%		
3022	AI2 FAULT LIMIT	0…100%	0.1%	0%		
3023	WIRING FAULT	0 = DISABLE, 1 = ENABLE	1	1 (ENABLE)		✓
3024	CB TEMP FAULT	0 = DISABLE, 1 = ENABLE	1	1 (ENABLE)		
Group 31: AUTOMATIC RESET						
3101	NUMBER OF TRIALS	0…5	1	0		
3102	TRIAL TIME	1.0…600.0 s	0.1 s	30 s		
3103	DELAY TIME	0.0…120.0 s	0.1 s	0 s		
3104	AR OVERCURRENT	0 = DISABLE, 1 = ENABLE	1	0 (DISABLE)		
3105	AR OVERVOLTAGE	0 = DISABLE, 1 = ENABLE	1	0 (DISABLE)		
3106	AR UNDERVOLTAGE	0 = DISABLE, 1 = ENABLE	1	0 (DISABLE)		
3107	AR AI<MIN	0 = DISABLE, 1 = ENABLE	1	0 (DISABLE)		
3108	AR EXTERNAL FLT	0 = DISABLE, 1 = ENABLE	1	0 (DISABLE)		
Group 32: SUPERVISION						
3201	SUPERV 1 PARAM	100 = NOT SELECTED, 101…159	1	103 (parameter 0103 OUTPUT FREQ)		
3202	SUPERV 1 LIM LO	-	-	0		
3203	SUPERV 1 LIM HI	-	-	0		
3204	SUPERV 2 PARAM	100 = NOT SELECTED, 101…159	1	104 (parameter 0104 CURRENT)		
3205	SUPERV 2 LIM LO	-	-	0		
3206	SUPERV 2 LIM HI	-	-	0		
3207	SUPERV 3 PARAM	100 = NOT SELECTED, 101…159	1	105 (parameter 0105 TORQUE)		
3208	SUPERV 3 LIM LO	-	-	0		
3209	SUPERV 3 LIM HI	-	-	0		

Code	Name	Range	Resolution	Default	User	S
Group 33: INFORMATION						
3301	FIRMWARE	0000…FFFF hex	1	Firmware version		
3302	LOADING PACKAGE	0000…FFFF hex	1	0		
3303	TEST DATE	yy.ww	1	0		
3304	DRIVE RATING	-	-	-		
3305	PARAMETER TABLE	0000…FFFF hex	1	Par. table version		
Group 34: PANEL DISPLAY						
3401	SIGNAL1 PARAM	100 = NOT SELECTED, 101…159	1	103 (parameter 0103 OUTPUT FREQ)		
3402	SIGNAL1 MIN	-	1	-		
3403	SIGNAL1 MAX	-	1	-		
3404	OUTPUT1 DSP FORM	0…9	1	9 (DIRECT)		
3405	OUTPUT1 UNIT	0…127	1	-		
3406	OUTPUT1 MIN	-	1	-		
3407	OUTPUT1 MAX	-	1	-		
3408	SIGNAL2 PARAM	100 = NOT SELECTED, 101…159	1	104 (parameter 0104 CURRENT)		
3409	SIGNAL2 MIN	-	1	-		
3410	SIGNAL2 MAX	-	1	-		
3411	OUTPUT2 DSP FORM	0…9	1	9 (DIRECT)		
3412	OUTPUT2 UNIT	0…127	1	-		
3413	OUTPUT2 MIN	-	1	-		
3414	OUTPUT2 MAX	-	1	-		
3415	SIGNAL3 PARAM	100 = NOT SELECTED, 101…159	1	105 (parameter 0105 TORQUE)		
3416	SIGNAL3 MIN	-	1	-		
3417	SIGNAL3 MAX	-	1	-		
3418	OUTPUT3 DSP FORM	0…9	1	9 (DIRECT)		
3419	OUTPUT3 UNIT	0…127	1	-		
3420	OUTPUT3 MIN	-	1	-		
3421	OUTPUT3 MAX	-	1	-		
Group 35: MOTOR TEMP MEAS						
3501	SENSOR TYPE	0…6	1	0 (NONE)		
3502	INPUT SELECTION	1…8	1	1 (AI1)		
3503	ALARM LIMIT	Par. 3501 = 1…3: -10…200 °C Par. 3501 = 4: 0…5000 ohm Par. 3501 = 5…6: 0…1	1	110 °C / 1500 ohm / 0		
3504	FAULT LIMIT	Par. 3501 = 1…3: -10…200 °C Par. 3501 = 4: 0…5000 ohm Par. 3501 = 5…6: 0…1	1	130 °C / 4000 ohm / 0		
Group 36: TIMED FUNCTIONS						
3601	TIMERS ENABLE	-6…7	1	0 (NOT SEL)		
3602	START TIME 1	00:00:00…23:59:58	2 s	00:00:00		
3603	STOP TIME 1	00:00:00…23:59:58	2 s	00:00:00		
3604	START DAY 1	1…7	1	1 (MONDAY)		
3605	STOP DAY 1	1…7	1	1 (MONDAY)		
3606	START TIME 2	00:00:00…23:59:58	2 s	00:00:00		

Code	Name	Range	Resolution	Default	User	S
3607	STOP TIME 2	00:00:00…23:59:58	2 s	00:00:00		
3608	START DAY 2	1…7	1	1 (MONDAY)		
3609	STOP DAY 2	1…7	1	1 (MONDAY)		
3610	START TIME 3	00:00:00…23:59:58	2 s	00:00:00		
3611	STOP TIME 3	00:00:00…23:59:58	2 s	00:00:00		
3612	START DAY 3	1…7	1	1 (MONDAY)		
3613	STOP DAY 3	1…7	1	1 (MONDAY)		
3614	START TIME 4	00:00:00…23:59:58	2 s	00:00:00		
3615	STOP TIME 4	00:00:00…23:59:58	2 s	00:00:00		
3616	START DAY 4	1…7	1	1 (MONDAY)		
3617	STOP DAY 4	1…7	1	1 (MONDAY)		
3622	BOOSTER SEL	-6…6	1	0 (NOT SEL)		
3623	BOOSTER TIME	00:00:00…23:59:58	2 s	00:00:00		
3626 … 3629	TIMED FUNC 1…4 SRC	0…31	1	0 (NOT SEL)		
Group 37: USER LOAD CURVE						
3701	USER LOAD C MODE	0…3	1	0 (NOT SEL)		
3702	USER LOAD C FUNC	1 = FAULT, 2 = ALARM	1	1 (FAULT)		
3703	USER LOAD C TIME	10…400 s	1 s	20 s		
3704	LOAD FREQ 1	0…500 Hz	1 Hz	5 Hz		
3705	LOAD TORQ LOW 1	0…600%	1%	10%		
3706	LOAD TORQ HIGH 1	0…600%	1%	300%		
3707	LOAD FREQ 2	0…500 Hz	1 Hz	25 Hz		
3708	LOAD TORQ LOW 2	0…600%	1%	15%		
3709	LOAD TORQ HIGH 2	0…600%	1%	300%		
3710	LOAD FREQ 3	0…500 Hz	1 Hz	43 Hz		
3711	LOAD TORQ LOW 3	0…600%	1%	25%		
3712	LOAD TORQ HIGH 3	0…600%	1%	300%		
3713	LOAD FREQ 4	0…500 Hz	1 Hz	50 Hz		
3714	LOAD TORQ LOW 4	0…600%	1%	30%		
3715	LOAD TORQ HIGH 4	0…600%	1%	300%		
3716	LOAD FREQ 5	0…500 Hz	1 Hz	500 Hz		
3717	LOAD TORQ LOW 5	0…600%	1%	30%		
3718	LOAD TORQ HIGH 5	0…600%	1%	300%		
Group 40: PROCESS PID SET 1						
4001	GAIN	0.1…100.0	0.1	1.0		
4002	INTEGRATION TIME	0.0 = NOT SEL, 0.1…3600.0 s	0.1 s	60.0 s		
4003	DERIVATION TIME	0.0…10.0 s	0.1 s	0.0 s		
4004	PID DERIV FILTER	0.0…10.0 s	0.1 s	1.0 s		
4005	ERROR VALUE INV	0 = NO, 1 = YES	1	0 (NO)		
4006	UNITS	0…127	1	4 (%)		
4007	UNIT SCALE	0…4	1	1		
4008	0% VALUE	Unit and scale defined by par. 4006 and 4007	-	0.0%		

Code	Name	Range	Resolution	Default	User	S
4009	100% VALUE	Unit and scale defined by par. 4006 and 4007	-	100.0%		
4010	SET POINT SEL	0…2, 8…17, 19…20	1	1 (AI1)		✓
4011	INTERNAL SETPNT	Unit and scale defined by par. 4006 and 4007	-	40.0%		
4012	SETPOINT MIN	-500.0…500.0%	0.1%	0.0%		
4013	SETPOINT MAX	-500.0…500.0%	0.1%	100.0%		
4014	FBK SEL	1…13	1	1 (ACT1)		
4015	FBK MULTIPLIER	0.000 = NOT SEL, -32.768…32.767	0.001	0.000 (NOT SEL)		
4016	ACT1 INPUT	1…7	1	2 (AI2)		✓
4017	ACT2 INPUT	1…7	1	2 (AI2)		✓
4018	ACT1 MINIMUM	-1000…1000%	1%	0%		
4019	ACT1 MAXIMUM	-1000…1000%	1%	100%		
4020	ACT2 MINIMUM	-1000…1000%	1%	0%		
4021	ACT2 MAXIMUM	-1000…1000%	1%	100%		
4022	SLEEP SELECTION	-6…7	1	0 (NOT SEL)		
4023	PID SLEEP LEVEL	0…30000 rpm / 0.0…500.0 Hz	1 rpm / 0.1 Hz	0 rpm / 0.0 Hz		
4024	PID SLEEP DELAY	0.0…3600.0 s	0.1 s	60.0 s		
4025	WAKE-UP DEV	Unit and scale defined by par. 4006 and 4007	-	0.0%		
4026	WAKE-UP DELAY	0.00…60.00 s	0.01 s	0.50 s		
4027	PID 1 PARAM SET	-6…14	1	0 (SET 1)		
Group 41: PROCESS PID SET 2						
4101	GAIN	0.1…100.0	0.1	1.0		
4102	INTEGRATION TIME	0.0 = NOT SEL, 0.1…3600.0 s	0.1 s	60.0 s		
4103	DERIVATION TIME	0.0…10.0 s	0.1 s	0.0 s		
4104	PID DERIV FILTER	0.0…10.0 s	0.1 s	1.0 s		
4105	ERROR VALUE INV	0 = NO, 1 = YES	1	0 (NO)		
4106	UNITS	0…127	1	4 (%)		
4107	UNIT SCALE	0…4	1	1		
4108	0% VALUE	Unit and scale defined by par. 4106 and 4107	-	0.0%		
4109	100% VALUE	Unit and scale defined by par. 4106 and 4107	-	100.0%		
4110	SET POINT SEL	0…2, 8…17, 19…20	1	1 (AI1)		✓
4111	INTERNAL SETPNT	Unit and scale defined by par. 4106 and 4107	-	40.0%		
4112	SETPOINT MIN	-500.0…500.0%	0.1%	0.0%		
4113	SETPOINT MAX	-500.0…500.0%	0.1%	100.0%		
4114	FBK SEL	1…13	1	1 (ACT1)		
4115	FBK MULTIPLIER	0.000 = NOT SEL, -32.768…32.767	0.001	0.000 (NOT SEL)		
4116	ACT1 INPUT	1…7	1	2 (AI2)		✓
4117	ACT2 INPUT	1…7	1	2 (AI2)		✓
4118	ACT1 MINIMUM	-1000…1000%	1%	0%		
4119	ACT1 MAXIMUM	-1000…1000%	1%	100%		
4120	ACT2 MINIMUM	-1000…1000%	1%	0%		
4121	ACT2 MAXIMUM	-1000…1000%	1%	100%		

Code	Name	Range	Resolution	Default	User	S
4122	SLEEP SELECTION	-6…7	1	0 (NOT SEL)		
4123	PID SLEEP LEVEL	0…30000 rpm / 0.0…500.0 Hz	1 rpm / 0.1 Hz	0 rpm / 0.0 Hz		
4124	PID SLEEP DELAY	0.0…3600.0 s	0.1 s	60.0 s		
4125	WAKE-UP DEV	Unit and scale defined by par. 4106 and 4107	-	0.0%		
4126	WAKE-UP DELAY	0.00…60.00 s	0.01 s	0.50 s		
Group 42: EXT / TRIM PID						
4201	GAIN	0.1…100.0	0.1	1.0		
4202	INTEGRATION TIME	0.0 = NOT SEL, 0.1…3600.0 s	0.1 s	60 s		
4203	DERIVATION TIME	0.0…10.0 s	0.1 s	0.0 s		
4204	PID DERIV FILTER	0.0…10.0 s	0.1 s	1.0 s		
4205	ERROR VALUE INV	0 = NO, 1 = YES	1	0 (NO)		
4206	UNITS	0…127	1	4 (%)		
4207	UNIT SCALE	0…4	1	1		
4208	0% VALUE	Unit and scale defined by par. 4206 and 4207	-	0.0%		
4209	100% VALUE	Unit and scale defined by par. 4206 and 4207	-	100.0%		
4210	SET POINT SEL	0…2, 8…17, 19…20	1	1 (AI1)		✓
4211	INTERNAL SETPNT	Unit and scale defined by par. 4206 and 4207	-	40.0%		
4212	SETPOINT MIN	-500.0…500.0%	0.1%	0.0%		
4213	SETPOINT MAX	-500.0…500.0%	0.1%	100.0%		
4214	FBK SEL	1…13	1	1 (ACT1)		
4215	FBK MULTIPLIER	0.000 = NOT SEL, -32.768…32.767	0.001	0.000 (NOT SEL)		
4216	ACT1 INPUT	1…7	1	2 (AI2)		✓
4217	ACT2 INPUT	1…7	1	2 (AI2)		✓
4218	ACT1 MINIMUM	-1000…1000%	1%	0%		
4219	ACT1 MAXIMUM	-1000…1000%	1%	100%		
4220	ACT2 MINIMUM	-1000…1000%	1%	0%		
4221	ACT2 MAXIMUM	-1000…1000%	1%	100%		
4228	ACTIVATE	-6…12	1	0 (NOT SEL)		
4229	OFFSET	0.0…100.0%	0.1%	0.0%		
4230	TRIM MODE	0 = NOT SEL, 1 = PROPORTIONAL, 3 = DIRECT	1	0 (NOT SEL)		
4231	TRIM SCALE	-100.0…100.0%	0.1%	0.0%		
4232	CORRECTION SRC	1 = PID2REF, 2 = PID2OUTPUT	1	1 (PID2REF)		
Group 50: ENCODER						
5001	PULSE NR	50…16384	1	1024		✓
5002	ENCODER ENABLE	0 = DISABLE, 1 = ENABLE	1	0 (DISABLE)		✓
5003	ENCODER FAULT	1 = FAULT, 2 = ALARM	1	1 (FAULT)		✓
5010	Z PLS ENABLE	0 = DISABLE, 1 = ENABLE	1	0 (DISABLE)		✓
5011	POSITION RESET	0 = DISABLE, 1 = ENABLE	1	0 (DISABLE)		
Group 51: EXT COMM MODULE						
5101	FBA TYPE	-	-	0 (NOT DEFINED)		
5102… 5126	FB PAR 2…26	0…65535	1	0		

Code	Name	Range	Resolution	Default	User	S
5127	FBA PAR REFRESH	0 = DONE, 1 = REFRESH	1	0 (DONE)		✓
5128	FILE CPI FW REV	0…0xFFFF (hex)	1	0		
5129	FILE CONFIG ID	0…0xFFFF (hex)	1	0		
5130	FILE CONFIG REV	0…0xFFFF (hex)	1	0		
5131	FBA STATUS	0…6	1	0 (IDLE)		
5132	FBA CPI FW REV	0…0xFFFF (hex)	1	0		
5133	FBA APPL FW REV	0…0xFFFF (hex)	1	0		
Group 52: PANEL COMM						
5201	STATION ID	1…247	1	1		
5202	BAUD RATE	9.6, 19.2, 38.4, 57.6, 115.2 kbits/s	-	9.6 kbits/s		
5203	PARITY	0 = 8 NONE 1, 1 = 8 NONE 2, 2 = 8 EVEN 1, 3 = 8 ODD 1	1	0 (8 NONE 1)		
5204	OK MESSAGES	0…65535	1	-		
5205	PARITY ERRORS	0…65535	1	-		
5206	FRAME ERRORS	0…65535	1	-		
5207	BUFFER OVERRUNS	0…65535	1	-		
5208	CRC ERRORS	0…65535	1	-		
Group 53: EFB PROTOCOL						
5301	EFB PROTOCOL ID	0…0xFFFF	1	0		
5302	EFB STATION ID	0…65535	1	1		✓
5303	EFB BAUD RATE	1.2, 2.4, 4.8, 9.6, 19.2, 38.4, 57.6, 76.8 kbits/s	-	9.6 kbits/s		
5304	EFB PARITY	0 = 8 NONE 1, 1 = 8 NONE 2, 2 = 8 EVEN 1, 3 = 8 ODD 1		0 (8 NONE 1)		
5305	EFB CTRL PROFILE	0 = ABB DRV LIM, 1 = DCU PROFILE, 2 = ABB DRV FULL	1	0 (ABB DRV LIM)		
5306	EFB OK MESSAGES	0…65535	1	0		
5307	EFB CRC ERRORS	0…65535	1	0		
5308	EFB UART ERRORS	0…65535	1	0		
5309	EFB STATUS	0…7	1	0 (IDLE)		
5310	EFB PAR 10	0…65535	1	0 (NOT SEL)		
5311	EFB PAR 11	0…65535	1	0 (NOT SEL)		
5312	EFB PAR 12	0…65535	1	0 (NOT SEL)		
5313	EFB PAR 13	0…65535	1	0 (NOT SEL)		
5314	EFB PAR 14	0…65535	1	0 (NOT SEL)		
5315	EFB PAR 15	0…65535	1	0 (NOT SEL)		
5316	EFB PAR 16	0…65535	1	0 (NOT SEL)		
5317	EFB PAR 17	0…65535	1	0 (NOT SEL)		
5318	EFB PAR 18	0…65535	1	0		
5319	EFB PAR 19	0…0xFFFF (hex)	1	0		
5320	EFB PAR 20	0…0xFFFF (hex)	1	0		
Group 81: PFC CONTROL						
8103	REFERENCE STEP 1	0.0…100.0%	0.1%	0.0%		
8104	REFERENCE STEP 2	0.0…100.0%	0.1%	0.0%		
8105	REFERENCE STEP 3	0.0…100.0%	0.1%	0.0%		

Code	Name	Range	Resolution	Default	User	S
8109	START FREQ 1	0.0…500.0 Hz	0.1 Hz	01: 50.0 Hz / U1: 0.0 Hz		
8110	START FREQ 2	0.0…500.0 Hz	0.1 Hz	01: 50.0 Hz / U1: 0.0 Hz		
8111	START FREQ 3	0.0…500.0 Hz	0.1 Hz	01: 50.0 Hz / U1: 0.0 Hz		
8112	LOW FREQ 1	0.0…500.0 Hz	0.1 Hz	01: 25.0 Hz / U1: 30.0 Hz		
8113	LOW FREQ 2	0.0…500.0 Hz	0.1 Hz	01: 25.0 Hz / U1: 30.0 Hz		
8114	LOW FREQ 3	0.0…500.0 Hz	0.1 Hz	01: 25.0 Hz / U1: 30.0 Hz		
8115	AUX MOT START D	0.0…3600.0 s	0.1 s	5.0 s		
8116	AUX MOT STOP D	0.0…3600.0 s	0.1 s	3.0 s		
8117	NR OF AUX MOT	0…4	1	1		✓
8118	AUTOCHNG INTERV	-0.1 = TEST MODE, 0.0 = NOT SEL, 0.1…336 h	0.1 h	0.0 h (NOT SEL)		✓
8119	AUTOCHNG LEVEL	0.0…100.0%	0.1%	50%		
8120	INTERLOCKS	0…6	1	4 (DI4)		✓
8121	REG BYPASS CTRL	0 = NO, 1 = YES	1	0 (NO)		
8122	PFC START DELAY	0.00…10.00 s	0.01 s	0.50 s		
8123	PFC ENABLE	0 = NOT SEL, 1 = ACTIVE	1	0 (NOT SEL)		✓
8124	ACC IN AUX STOP	0.0 = NOT SEL, 0.1…1800.0 s	0.1 s	0.0 s (NOT SEL)		
8125	DEC IN AUX START	0.0 = NOT SEL, 0.1…1800.0 s	0.1 s	0.0 s (NOT SEL)		
8126	TMED AUTOCHNG	0…4	1	0 (NOT SEL)		
8127	MOTORS	1…7	1	2		✓
8128	AUX START ORDER	1 = EVEN RUNTIME, 2 = RELAY ORDER	1	1 (EVEN RUNTIME)		✓
Group 98: OPTIONS						
9802	COMM PROT SEL	0 = NOT SEL, 1 = STD MODBUS, 4 = EXT FBA	1	0 (NOT SEL)		✓

Complete parameter descriptions

This section describes the actual signals and parameters for ACS550.

Group 99: START-UP DATA

This group defines special start-up data required to:

- set up the drive
- enter motor information.

Code	Description
9901	**LANGUAGE** Selects the display language. There are two different Assistant Control Panels, each supporting a different language set. (Panel ACS-CP-L supporting languages 0, 2, 11…15 will be integrated into ACS-CP-A.) Assistant Control Panel ACS-CP-A: 0 = ENGLISH 1 = ENGLISH (AM) 2 = DEUTSCH 3 = ITALIANO 4 = ESPAÑOL 5 = PORTUGUES 6 = NEDERLANDS 7 = FRANÇAIS 8 = DANSK 9 = SUOMI 10 = SVENSKA 11 = RUSSKI 12 = POLSKI 13 = TÜRKÇE 14 = CZECH 15 = MAGYAR Assistant Control Panel ACS-CP-D (Asia): 0 = ENGLISH 1 = CHINESE 2 = KOREAN 3 = JAPANESE
9902	**APPLIC MACRO** Selects an application macro. Application macros automatically edit parameters to configure the ACS550 for a particular application. 1 = ABB STANDARD 2 = 3-WIRE 3 = ALTERNATE 4 = MOTOR POT 5 = HAND/AUTO 6 = PID CONTROL 7 = PFC CONTROL 8 = TORQUE CTRL 31 = LOAD FD SET 0 = USER S1 LOAD -1 = USER S1 SAVE -2 = USER S2 LOAD -3 = USER S2 SAVE 31 = LOAD FD SET – FlashDrop parameter values as defined by the FlashDrop file. Parameter view is selected by parameter 1611 PARAMETER VIEW. • FlashDrop is an optional device for fast copying of parameters to unpowered drives. FlashDrop allows easy customization of the parameter list, e.g. selected parameters can be hidden. For more information, see *MFDT-01 FlashDrop User's Manual* [3AFE68591074 (English)]. -1 = USER S1 SAVE, -3 = USER S2 SAVE – With these it is possible to save two different user parameter sets into the drive permanent memory for later use. Each set contains parameter settings, including *Group 99: START-UP DATA*, and the results of the motor identification run. 0 = USER S1 LOAD, -2 = USER S2 LOAD – With these the user parameter sets can be taken back in use.
9904	**MOTOR CTRL MODE** Selects the motor control mode. 1 = VECTOR:SPEED – sensorless vector control mode. • Reference 1 is speed reference in rpm. • Reference 2 is speed reference in % (100% is absolute maximum speed, equal to the value of parameter 2002 MAXIMUM SPEED, or 2001 MINIMUM SPEED if the absolute value of the minimum speed is greater than the maximum speed). 2 = VECTOR:TORQ. • Reference 1 is speed reference in rpm. • Reference 2 is torque reference in % (100% is nominal torque.) 3 = SCALAR:FREQ – scalar control mode. • Reference 1 is frequency reference in Hz. • Reference 2 is frequency reference in % (100% is absolute maximum frequency, equal to the value of parameter 2008 MAXIMUM FREQ, or 2007 MINIMUM FREQ if the absolute value of the minimum speed is greater than the maximum speed).
9905	**MOTOR NOM VOLT** Defines the nominal motor voltage. • Must equal the value on the motor rating plate. • The ACS550 cannot supply the motor with a voltage greater than the input power (mains) voltage.

Code	Description
9906	**MOTOR NOM CURR** Defines the nominal motor current. • Must equal the value on the motor rating plate. • Range allowed: 0.2…2.0 · I_{2hd} (where I_{2hd} is drive current).
9907	**MOTOR NOM FREQ** Defines the nominal motor frequency. • Range: 10…500 Hz (typically 50 or 60 Hz) • Sets the frequency at which output voltage equals the MOTOR NOM VOLT. • Field weakening point = Nom Freq · Supply Volt / Mot Nom Volt
9908	**MOTOR NOM SPEED** Defines the nominal motor speed. • Must equal the value on the motor rating plate.
9909	**MOTOR NOM POWER** Defines the nominal motor power. • Must equal the value on the motor rating plate.
9910	**ID RUN** This parameter controls a self-calibration process called the Motor ID Run. During this process, the drive operates the motor (motor rotating) and makes measurements in order to identify motor characteristics and create a model used for internal calculations. An ID Run is especially effective when: • vector control mode is used [parameter *9904* = 1 (VECTOR:SPEED) or 2 (VECTOR:TORQ)], and/or • operation point is near zero speed, and/or • operation requires a torque range above the motor nominal torque, over a wide speed range, and without any measured speed feedback (i.e. without a pulse encoder). 0 = OFF/IDMAGN – The Motor ID Run process is not run. Identification magnetization is performed, depending on parameter 9904 and 2101 settings. In identification magnetization, the motor model is calculated at first start by magnetizing the motor for 10 to 15 s at zero speed (motor not rotating). The model is recalculated always at start after motor parameter changes. • Parameter *9904* = 1 (VECTOR:SPEED) or 2 (VECTOR:TORQ): Identification magnetization is performed. • Parameter *9904* = 3 (SCALAR:FREQ) and parameter *2101* = 3 (SCALAR FLYST) or 5 (FLY + BOOST): Identification magnetization is performed. • Parameter *9904* = 3 (SCALAR:FREQ) and parameter *2101* has other value than 3 (SCALAR FLYST) or 5 (FLY + BOOST): Identification magnetization is not performed. 1 = ON – Enables the Motor ID Run, during which the motor is rotating, at the next start command. After run completion, this value automatically changes to 0. **Note:** The motor must be de-coupled from the driven equipment. **Note:** If motor parameters are changed after ID Run, repeat the ID Run. ⚠ **WARNING!** The motor will run at up to approximately 50…80% of the nominal speed during the ID Run. The motor will rotate in the forward direction. **Ensure that it is safe to run the motor before performing the ID Run!** See also section *How to perform the ID Run* on page *39*.

Group 01: OPERATING DATA

This group contains drive operating data, including actual signals. The drive sets the values for actual signals, based on measurements or calculations. You cannot set these values.

Code	Description
0101	**SPEED & DIR** The calculated signed speed of the motor (rpm). The absolute value of 0101 SPEED & DIR is the same as the value of 0102 SPEED. • The value of 0101 SPEED & DIR is positive if the motor runs in the forward direction. • The value of 0101 SPEED & DIR is negative if the motor runs in the reverse direction.
0102	**SPEED** The calculated speed of the motor (rpm). (Parameter 0102 or 0103 is shown by default in the control panel Output mode.)
0103	**OUTPUT FREQ** The frequency (Hz) applied to the motor. (Parameter 0102 or 0103 is shown by default in the control panel Output mode.)
0104	**CURRENT** The motor current, as measured by the ACS550. (Shown by default in the control panel Output mode.)
0105	**TORQUE** Output torque. Calculated value of torque on motor shaft in % of motor nominal torque. (Shown by default in the control panel Output mode.)
0106	**POWER** The measured motor power in kW.
0107	**DC BUS VOLTAGE** The DC bus voltage in V DC, as measured by the ACS550.
0109	**OUTPUT VOLTAGE** The voltage applied to the motor.
0110	**DRIVE TEMP** The temperature of the drive power transistors in degrees Celsius.
0111	**EXTERNAL REF 1** External reference, REF1, in rpm or Hz – units determined by parameter 9904.
0112	**EXTERNAL REF 2** External reference, REF2, in %.
0113	**CTRL LOCATION** Active control location. Alternatives are: 0 = LOCAL 1 = EXT1 2 = EXT2
0114	**RUN TIME (R)** The drive's accumulated running time in hours (h). • Can be **reset** by pressing UP and DOWN keys simultaneously when the control panel is in the Parameters mode.
0115	**KWH COUNTER (R)** The drive's accumulated power consumption in kilowatt hours. • Can be **reset** by pressing UP and DOWN keys simultaneously when the control panel is in the Parameters mode.
0116	**APPL BLK OUTPUT** Application block output signal. Value is from either: • PFC control, if PFC Control is active, or • Parameter 0112 EXTERNAL REF 2.

Code	Description
0118	**DI 1-3 STATUS** Status of the three digital inputs. • Status is displayed as a binary number. • 1 indicates that the input is activated. • 0 indicates that the input is deactivated.
0119	**DI 4-6 STATUS** Status of the three digital inputs. • See parameter 0118 DI 1-3 STATUS.
0120	**AI 1** The relative value of analog input 1 in %.
0121	**AI 2** The relative value of analog input 2 in %.
0122	**RO 1-3 STATUS** Status of the three relay outputs. • 1 indicates that the relay is energized. • 0 indicates that the relay is de-energized.
0123	**RO 4-6 STATUS** Status of the three relay outputs. • See parameter 0122.
0124	**AO 1** The analog output 1 value in milliamperes.
0125	**AO 2** The analog output 2 value in milliamperes.
0126	**PID 1 OUTPUT** The PID controller 1 output value in %.
0127	**PID 2 OUTPUT** The PID controller 2 output value in %.
0128	**PID 1 SETPNT** The PID 1 controller setpoint signal. • Units and scale defined by PID parameters.
0129	**PID 2 SETPNT** The PID 2 controller setpoint signal. • Units and scale defined by PID parameters.
0130	**PID 1 FBK** The PID 1 controller feedback signal. • Units and scale defined by PID parameters.
0131	**PID 2 FBK** The PID 2 controller feedback signal. • Units and scale defined by PID parameters.
0132	**PID 1 DEVIATION** The difference between the PID 1 controller reference value and actual value. • Units and scale defined by PID parameters.
0133	**PID 2 DEVIATION** The difference between the PID 2 controller reference value and actual value. • Units and scale defined by PID parameters.
0134	**COMM RO WORD** Free data location that can be written from serial link. • Used for relay output control. • See parameter 1401.
0135	**COMM VALUE 1** Free data location that can be written from serial link.

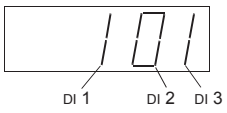

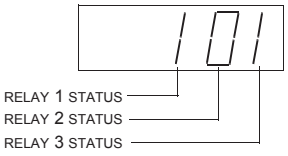

Code	Description
0136	**COMM VALUE 2** Free data location that can be written from serial link.
0137	**PROCESS VAR 1** Process variable 1 • Defined by parameters in *Group 34: PANEL DISPLAY*.
0138	**PROCESS VAR 2** Process variable 2 • Defined by parameters in *Group 34: PANEL DISPLAY*.
0139	**PROCESS VAR 3** Process variable 3 • Defined by parameters in *Group 34: PANEL DISPLAY*.
0140	**RUN TIME** The drive's accumulated running time in thousands of hours (kh). • Cannot be reset.
0141	**MWH COUNTER** The drive's accumulated power consumption in megawatt hours. • Cannot be reset.
0142	**REVOLUTION CNTR** The motor's accumulated revolutions in millions of revolutions. • Can be reset by pressing UP and DOWN keys simultaneously when the control panel is in the Parameters mode.
0143	**DRIVE ON TIME HI** The drive's accumulated power-on time in days. • Cannot be reset.
0144	**DRIVE ON TIME LO** The drive's accumulated power-on time in 2 second ticks (30 ticks = 60 seconds). • Shown in format hh.mm.ss. • Cannot be reset.
0145	**MOTOR TEMP** Motor temperature in degrees Celsius / PTC resistance in ohms. • Applies only if motor temperature sensor is set up. • See parameter 3501.
0146	**MECH ANGLE** Defines the motor shaft's angular position to about 0.01° (32,768 divisions for 360°). The position is defined as 0 at power up. During operation the zero position can be set by: • a Z-pulse input, if parameter 5010 Z PLS ENABLE = 1 (ENABLE) • parameter 5011 POSITION RESET, if parameter 5010 Z PLS ENABLE = 2 (DISABLE) • any status change of parameter 5002 ENCODER ENABLE.
0147	**MECH REVS** A signed integer that counts full revolutions of the motor shaft. The value: • increments when parameter 0146 MECH ANGLE changes from 32767 to 0 • decrements when parameter 0146 MECH ANGLE changes from 0 to 32767.
0148	**Z PLS DETECTED** Encoder zero pulse detector. When a Z-pulse defines the zero position, the shaft must pass through the zero position to trigger a Z-pulse. Until then, the shaft position is unknown (the drive uses the shaft position at power up as zero). This parameter signals when parameter 0146 MECH ANGLE is valid. The parameter starts at 0 = NOT DETECTED on power-up and changes to 1 = DETECTED only if: • parameter 5010 Z PLS ENABLE = 1 (ENABLE) and • an encoder Z-pulse has been detected.
0150	**CB TEMP** Temperature of the drive control board in degrees Celsius. **Note:** Some drives have a control board (OMIO) that does not support this feature. These drives always show the constant value of 25.0 °C.

Code	Description
0151	**INPUT KWH (R)** Calculated actual intake energy in kWh.
0152	**INPUT MWH** Calculated actual intake energy in MWh.
0158	**PID COMM VALUE 1** Data received from fieldbus for PID control (PID1 and PID2).
0159	**PID COMM VALUE 2** Data received from fieldbus for PID control (PID1 and PID2).

Group 03: FB ACTUAL SIGNALS

This group monitors fieldbus communications.

Code	Description
0301	**FB CMD WORD 1** Read-only copy of the Fieldbus Command Word 1. • The fieldbus command is the principal means for controlling the drive from a fieldbus controller. The command consists of two Command Words. Bit-coded instructions in the Command Words switch the drive between states. • To control the drive, using the Command Words, an external location (EXT1 or EXT2) must be active and set to COMM. (See parameters 1001 and 1002.) • The control panel displays the word in hex. For example, all zeros and a 1 in Bit 0 displays as 0001. All zeros and a 1 in Bit 15 displays as 8000.
0302	**FB CMD WORD 2** Read-only copy of the Fieldbus Command Word 2. • See parameter 0301.

Bit #	0301, FB CMD WORD 1	0302, FB CMD WORD 2
0	STOP	FBLOCAL_CTL
1	START	FBLOCAL_REF
2	REVERSE	START_DISABLE1
3	LOCAL	START_DISABLE2
4	RESET	Reserved
5	EXT2	Reserved
6	RUN_DISABLE	Reserved
7	STPMODE_R	Reserved
8	STPMODE_EM	Reserved
9	STPMODE_C	Reserved
10	RAMP_2	Reserved
11	RAMP_OUT_0	REF_CONST
12	RAMP_HOLD	REF_AVE
13	RAMP_IN_0	LINK_ON
14	RREQ_LOCALLOC	REQ_STARTINH
15	TORQLIM2	OFF_INTERLOCK

Code	Description
0303	**FB STS WORD 1** Read-only copy of the Status Word 1. • The drive sends status information to the fieldbus controller. The status consists of two Status Words. • The control panel displays the word in hex. For example, all zeros and a 1 in Bit 0 displays as 0001. All zeros and a 1 in Bit 15 displays as 8000.
0304	**FB STS WORD 2** Read-only copy of the Status Word 2. • See parameter 0303.

Bit #	0303, FB STS WORD 1	0304, FB STS WORD 2
0	READY	ALARM
1	ENABLED	NOTICE
2	STARTED	DIRLOCK
3	RUNNING	LOCALLOCK
4	ZERO_SPEED	CTL_MODE
5	ACCELERATE	Reserved
6	DECELERATE	Reserved
7	AT_SETPOINT	CPY_CTL
8	LIMIT	CPY_REF1
9	SUPERVISION	CPY_REF2
10	REV_REF	REQ_CTL
11	REV_ACT	REQ_REF1
12	PANEL_LOCAL	REQ_REF2
13	FIELDBUS_LOCAL	REQ_REF2EXT
14	EXT2_ACT	ACK_STARTINH
15	FAULT	ACK_OFF_ILCK

Code	Description
0305	**FAULT WORD 1** Read-only copy of the Fault Word 1. • When a fault is active, the corresponding bit for the active fault is set in the Fault Words. • Each fault has a dedicated bit allocated within Fault Words. • See section *Fault listing* on page *244* for a description of the faults. • The control panel displays the word in hex. For example, all zeros and a 1 in Bit 0 displays as 0001. All zeros and a 1 in Bit 15 displays as 8000.
0306	**FAULT WORD 2** Read-only copy of the Fault Word 2. • See parameter 0305.
0307	**FAULT WORD 3** Read-only copy of the Fault Word 3. • See parameter 0305.

Bit #	0305, FAULT WORD 1	0306, FAULT WORD 2	0307, FAULT WORD 3
0	OVERCURRENT	Obsolete	EFB 1
1	DC OVERVOLT	THERM FAIL	EFB 2
2	DEV OVERTEMP	OPEX LINK	EFB 3
3	SHORT CIRC	OPEX PWR	INCOMPATIBLE SW
4	Reserved	CURR MEAS	USER LOAD CURVE
5	DC UNDERVOLT	SUPPLY PHASE	Reserved
6	AI1 LOSS	ENCODER ERR	Reserved
7	AI2 LOSS	OVERSPEED	Reserved
8	MOT OVERTEMP	Reserved	Reserved
9	PANEL LOSS	DRIVE ID	Reserved
10	ID RUN FAIL	CONFIG FILE	System error
11	MOTOR STALL	SERIAL 1 ERR	System error
12	CB OVERTEMP	EFB CON FILE	System error
13	EXT FAULT 1	FORCE TRIP	System error
14	EXT FAULT 2	MOTOR PHASE	System error
15	EARTH FAULT	OUTP WIRING	Param. setting fault

Code	Description
0308	**ALARM WORD 1** • When an alarm is active, the corresponding bit for the active alarm is set in the Alarm Words. • Each alarm has a dedicated bit allocated within Alarm Words. • Bits remain set until the whole alarm word is reset. (Reset by writing zero to the word.) • The control panel displays the word in hex. For example, all zeros and a 1 in Bit 0 displays as 0001. All zeros and a 1 in Bit 15 displays as 8000.
0309	**ALARM WORD 2** See parameter 0308.

Bit #	0308, ALARM WORD 1	0309, ALARM WORD 2
0	OVERCURRENT	OFF BUTTON
1	OVERVOLTAGE	PID SLEEP
2	UNDERVOLTAGE	ID RUN
3	DIRLOCK	Reserved
4	COMM LOSS	START ENABLE 1
5	AI1 LOSS	START ENABLE 2
6	AI2 LOSS	EMERGENCY STOP
7	PANEL LOSS	ENCODER ERROR
8	DEVICE OVERTEMP	FIRST START
9	MOTOR TEMP	Reserved
10	Reserved	USER LOAD CURVE
11	MOTOR STALL	START DELAY
12	AUTORESET	Reserved
13	PFC AUTOCHANGE	Reserved
14	PFC ILOCK	Reserved
15	Reserved	Reserved

Group 04: FAULT HISTORY

This group stores a recent history of the faults reported by the drive.

Code	Description
0401	**LAST FAULT** 0 – Clear the fault history (on panel = NO RECORD). n – Fault code of the last recorded fault. The fault code is displayed as a name. See section *Fault listing* on page *244* for the fault codes and names. The fault name shown for this parameter may be shorter than the corresponding name in the fault listing, which shows the names as they are shown in the fault display.
0402	**FAULT TIME 1** The day on which the last fault occurred. Either as: • A date – if real time clock is operating. • The number of days after power on – if real time clock is not used, or was not set.
0403	**FAULT TIME 2** The time at which the last fault occurred. Either as: • Real time, in format hh:mm:ss – if real time clock is operating. • The time since power on (minus the whole days reported in 0402), in format hh:mm:ss – if real time clock is not used, or was not set. • Format on the Basic Control Panel: The time since power on in 2-second ticks (minus the whole days reported in 0402). 30 ticks = 60 seconds. E.g. Value 514 equals 17 minutes and 8 seconds (= 514/30).
0404	**SPEED AT FLT** The motor speed (rpm) at the time the last fault occurred.
0405	**FREQ AT FLT** The frequency (Hz) at the time the last fault occurred.
0406	**VOLTAGE AT FLT** The DC bus voltage (V) at the time the last fault occurred.
0407	**CURRENT AT FLT** The motor current (A) at the time the last fault occurred.
0408	**TORQUE AT FLT** The motor torque (%) at the time the last fault occurred.
0409	**STATUS AT FLT** The drive status (hex code word) at the time the last fault occurred.
0410	**DI 1-3 AT FLT** The status of digital inputs 1…3 at the time the last fault occurred.
0411	**DI 4-6 AT FLT** The status of digital inputs 4…6 at the time the last fault occurred.
0412	**PREVIOUS FAULT 1** Fault code of the second last fault. Read-only.
0413	**PREVIOUS FAULT 2** Fault code of the third last fault. Read-only.

Group 10: START/STOP/DIR

This group:

- defines external sources (EXT1 and EXT2) for commands that enable start, stop and direction changes
- locks direction or enables direction control.

To select between the two external locations use the next group (parameter 1102).

Code	Description
1001	**EXT1 COMMANDS** Defines external control location 1 (EXT1) – the configuration of start, stop and direction commands. 0 = NOT SEL – No external start, stop and direction command source. 1 = DI1 – Two-wire Start/Stop. • Start/Stop is through digital input DI1 (DI1 activated = Start; DI1 de-activated = Stop). • Parameter 1003 defines the direction. Selecting 1003 = 3 (REQUEST) is the same as 1003 = 1 (FORWARD). 2 = DI1,2 – Two-wire Start/Stop, Direction. • Start/Stop is through digital input DI1 (DI1 activated = Start; DI1 de-activated = Stop). • Direction control [requires parameter 1003 = 3 (REQUEST)] is through digital input DI2 (DI2 activated = Reverse; de-activated = Forward). 3 = DI1P,2P – Three-wire Start/Stop. • Start/Stop commands are through momentary push-buttons (the P stands for "pulse"). • Start is through a normally open push-button connected to digital input DI1. In order to start the drive, the digital input DI2 must be activated prior to the pulse in DI1. • Connect multiple Start push-buttons in parallel. • Stop is through a normally closed push-button connected to digital input DI2. • Connect multiple Stop push-buttons in series. • Parameter 1003 defines the direction. Selecting 1003 = 3 (REQUEST) is the same as 1003 = 1 (FORWARD). 4 = DI1P,2P,3 – Three-wire Start/Stop, Direction. • Start/Stop commands are through momentary push-buttons, as described for DI1P,2P. • Direction control [requires parameter 1003 = 3 (REQUEST)] is through digital input DI3 (DI3 activated = Reverse; de-activated = Forward). 5 = DI1P,2P,3P – Start Forward, Start Reverse and Stop. • Start and Direction commands are given simultaneously with two separate momentary push-buttons (the P stands for "pulse"). • Start Forward command is through a normally open push-button connected to digital input DI1. In order to start the drive, the digital input DI3 must be activated prior to the pulse in DI1. • Start Reverse command is through a normally open push-button connected to digital input DI2. In order to start the drive, the digital input DI3 must be activated during the pulse in DI2. • Connect multiple Start push-buttons in parallel. • Stop is through a normally closed push-button connected to digital input DI3. • Connect multiple Stop push-buttons in series. • Requires parameter 1003 = 3 (REQUEST). 6 = DI6 – Two-wire Start/Stop. • Start/Stop is through digital input DI6 (DI6 activated = Start; DI6 de-activated = Stop). • Parameter 1003 defines the direction. Selecting 1003 = 3 (REQUEST) is the same as 1003 = 1 (FORWARD). 7 = DI6,5 – Two-wire Start/Stop/Direction. • Start/Stop is through digital input DI6 (DI6 activated = Start; DI6 de-activated = Stop). • Direction control [requires parameter 1003 = 3 (REQUEST)] is through digital input DI5. (DI5 activated = Reverse; de-activated = Forward). 8 = KEYPAD – Control Panel. • Start/Stop and Direction commands are through the control panel when EXT1 is active. • Direction control requires parameter 1003 = 3 (REQUEST). 9 = DI1F,2R – Start/Stop/Direction commands through DI1 and DI2 combinations. • Start forward = DI1 activated and DI2 de-activated. • Start reverse = DI1 de-activated and DI2 activated. • Stop = both DI1 and DI2 activated, or both de-activated. • Requires parameter 1003 = 3 (REQUEST). 10 = COMM – Assigns the fieldbus Command Word as the source for the start/stop and direction commands. • Bits 0,1, 2 of Command Word 1 (parameter 0301) activates the start/stop and direction commands. • See Fieldbus user's manual for detailed instructions.

Code	Description
	11 = TIMED FUNC 1. – Assigns Start/Stop control to Timed Function 1 (Timed Function activated = START; Timed Function de-activated = STOP). See *Group 36: TIMED FUNCTIONS*. 12…14 = TIMED FUNC 2…4 – Assigns Start/Stop control to Timed Function 2…4. See TIMED FUNC 1 above.
1002	**EXT2 COMMANDS** Defines external control location 2 (EXT2) – the configuration of start, stop and direction commands. • See parameter 1001 EXT1 COMMANDS above.
1003	**DIRECTION** Defines the control of motor rotation direction. 1 = FORWARD – Rotation is fixed in the forward direction. 2 = REVERSE – Rotation is fixed in the reverse direction. 3 = REQUEST – Rotation direction can be changed on command.
1004	**JOGGING SEL** Defines the signal that activates the jogging function. Jogging uses Constant Speed 7 (parameter 1208) for speed reference and ramp pair 2 (parameters 2205 and 2206) for accelerating and decelerating. When the jogging activation signal is lost, the drive uses ramp stop to decelerate to zero speed, even if coast stop is used in normal operation (parameter 2102). The jogging status can be parameterized to relay outputs (parameter 1401). The jogging status is also seen in DCU Profile status bit 21. 0 = NOT SEL – Disables the jogging function. 1 = DI1 – Activates/de-activates jogging based on the state of DI1 (DI1 activated = jogging active; DI1 de-activated = jogging inactive). 2…6 = DI2…DI6 – Activates jogging based on the state of the selected digital input. See DI1 above. -1 = DI1(INV) – Activates jogging based on the state of DI1 (DI1 activated = jogging inactive; DI1 de-activated = jogging active). -2…-6 = DI2(INV)…DI6(INV) – Activates jogging based on the state of the selected digital input. See DI1(INV) above.

Group 11: REFERENCE SELECT

This group defines:

- how the drive selects between command sources
- characteristics and sources for REF1 and REF2.

Code	Description
1101	**KEYPAD REF SEL** Selects the reference controlled in local control mode. 1 = REF1(Hz/rpm) – Reference type depends on parameter 9904 MOTOR CTRL MODE. • Speed reference (rpm) if 9904 = 1 (VECTOR:SPEED) or 2 (VECTOR:TORQ). • Frequency reference (Hz) if 9904 = 3 (SCALAR:FREQ). 2 = REF2(%)
1102	**EXT1/EXT2 SEL** Defines the source for selecting between the two external control locations EXT1 or EXT2. Thus, defines the source for Start/Stop/Direction commands and reference signals. 0 = EXT1 – Selects external control location 1 (EXT1). • See parameter 1001 EXT1 COMMANDS for EXT1's Start/Stop/Dir definitions. • See parameter 1103 REF1 SELECT for EXT1's reference definitions. 1 = DI1 – Assigns control to EXT1 or EXT2 based on the state of DI1 (DI1 activated = EXT2; DI1 de-activated = EXT1). 2…6 = DI2…DI6 – Assigns control to EXT1 or EXT2 based on the state of the selected digital input. See DI1 above. 7 = EXT2 – Selects external control location 2 (EXT2). • See parameter 1002 EXT2 COMMANDS for EXT2's Start/Stop/Dir definitions. • See parameter 1106 REF2 SELECT for EXT2's reference definitions. 8 = COMM – Assigns control of the drive via external control location EXT1 or EXT2 based on the fieldbus control word. • Bit 5 of the Command Word 1 (parameter 0301) defines the active external control location (EXT1 or EXT2). • See Fieldbus user's manual for detailed instructions. 9 = TIMED FUNC 1 – Assigns control to EXT1 or EXT2 based on the state of the Timed Function (Timed Function activated = EXT2; Timed Function de-activated = EXT1). See *Group 36: TIMED FUNCTIONS*. 10…12 = TIMED FUNC 2…4 – Assigns control to EXT1 or EXT2 based on the state of the Timed Function. See TIMED FUNC 1 above. -1 = DI1(INV) – Assigns control to EXT1 or EXT2 based on the state of DI1 (DI1 activated = EXT1; DI1 de-activated = EXT2). -2…-6 = DI2(INV)…DI6(INV) – Assigns control to EXT1 or EXT2 based on the state of the selected digital input. See DI1(INV) above.
1103	**REF1 SELECT** Selects the signal source for external reference REF1. 0 = KEYPAD – Defines the control panel as the reference source. 1 = AI1 – Defines analog input 1 (AI1) as the reference source. 2 = AI2 – Defines analog input 2 (AI2) as the reference source. 3 = AI1/JOYST – Defines analog input 1 (AI1), configured for joystick operation, as the reference source. • The minimum input signal runs the drive at the maximum reference in the reverse direction. Define the minimum using parameter 1104. • The maximum input signal runs the drive at maximum reference in the forward direction. Define the maximum using parameter 1105. • Requires parameter 1003 = 3 (REQUEST). 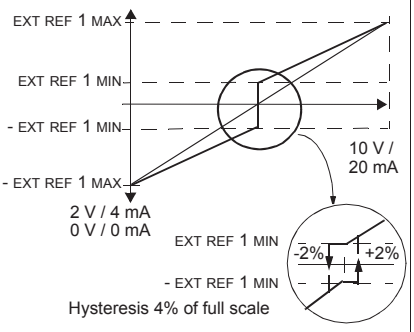 **WARNING!** Because the low end of the reference range commands full reverse operation, do not use 0 V as the lower end of the reference range. Doing so means that if the control signal is lost (which is a 0 V input) the result is full reverse operation. Instead, use the following set-up so that loss of the analog input triggers a fault, stopping the drive: • Set parameter 1301 MINIMUM AI1 (1304 MINIMUM AI2) at 20% (2 V or 4 mA). • Set parameter 3021 AI1 FAULT LIMIT to a value 5% or higher. • Set parameter 3001 AI<MIN FUNCTION to 1 (FAULT). 4 = AI2/JOYST – Defines analog input 2 (AI2), configured for joystick operation, as the reference source. • See above (AI1/JOYST) description.

Code	Description
	5 = DI3U,4D(R) – Defines digital inputs as the speed reference source (motor potentiometer control). • Digital input DI3 increases the speed (the U stands for "up"). • Digital input DI4 decreases the speed (the D stands for "down"). • A Stop command resets the reference to zero (the R stands for "reset"). • Parameter 2205 ACCELER TIME 2 controls the reference signal's rate of change. 6 = DI3U,4D – Same as above (DI3U,4D(R)), except: • A Stop command does not reset the reference to zero. The reference is stored. • When the drive restarts, the motor ramps up (at the selected acceleration rate) to the stored reference. 7 = DI5U,6D – Same as above (DI3U,4D), except that DI5 and DI6 are the digital inputs used. 8 = COMM – Defines the fieldbus as the reference source. 9 = COMM+AI1 – Defines a fieldbus and analog input 1 (AI1) combination as the reference source. See Analog input reference correction below. 10 = COMM*AI1 – Defines a fieldbus and analog input 1 (AI1) combination as the reference source. See Analog input reference correction below. 11 = DI3U,4D(RNC) – Same as DI3U,4D(R) above, except that: • Changing the control source (EXT1 to EXT2, EXT2 to EXT1, LOC to REM) does not copy the reference. 12 = DI3U,4D(NC) – Same as DI3U,4D above, except that: • Changing the control source (EXT1 to EXT2, EXT2 to EXT1, LOC to REM) does not copy the reference. 13 = DI5U,6D(NC) – Same as DI5U,6D above, except that: • Changing the control source (EXT1 to EXT2, EXT2 to EXT1, LOC to REM) does not copy the reference. 14 = AI1+AI2 – Defines an analog input 1 (AI1) and analog input 2 (AI2) combination as the reference source. See Analog input reference correction below. 15 = AI1*AI2 – Defines an analog input 1 (AI1) and analog input 2 (AI2) combination as the reference source. See Analog input reference correction below. 16 = AI1-AI2 – Defines an analog input 1 (AI1) and analog input 2 (AI2) combination as the reference source. See Analog input reference correction below. 17 = AI1/AI2 – Defines an analog input 1 (AI1) and analog input 2 (AI2) combination as the reference source. See Analog input reference correction below. 20 = KEYPAD(RNC) – Defines the control panel as the reference source. • A Stop command resets the reference to zero (the R stands for reset.). • Changing the control source (EXT1 to EXT2, EXT2 to EXT1) does not copy the reference. 21 = KEYPAD(NC) – Defines the control panel as the reference source. • A Stop command does not reset the reference to zero. The reference is stored. • Changing the control source (EXT1 to EXT2, EXT2 to EXT1) does not copy the reference.
	Analog input reference correction Parameter values 9, 10 and 14…17 use the formula in the following table. **Value setting** / **Calculation of the AI reference** C + B: C value + (B value - 50% of reference value) C * B: C value · (B value / 50% of reference value) C - B: (C value + 50% of reference value) - B value C / B: (C value · 50% of reference value) / B value Where: • C = Main reference value (= COMM for values 9, 10 and = AI1 for values 14…17). • B = Correcting reference (= AI1 for values 9, 10 and = AI2 for values 14…17). **Example:** The figure shows the reference source curves for value settings 9, 10 and 14…17, where: • C = 25%. • P 4012 SETPOINT MIN = 0. • P 4013 SETPOINT MAX = 0. • B varies along the horizontal axis. 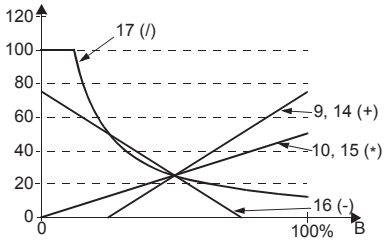

Code	Description
1104	**REF1 MIN** Sets the minimum for external reference 1. • The minimum analog input signal (as a percent of the full signal in volts or amperes) corresponds to REF1 MIN in Hz/rpm. • Parameter 1301 MINIMUM AI1 or 1304 MINIMUM AI2 sets the minimum analog input signal. • These parameters (reference and analog min. and max. settings) provide scale and offset adjustment for the reference.
1105	**REF1 MAX** Sets the maximum for external reference 1. • The maximum analog input signal (as a percent of full the signal in volts or amperes) corresponds to REF1 MAX in Hz/rpm. • Parameter 1302 MAXIMUM AI1 or 1305 MAXIMUM AI2 sets the maximum analog input signal.

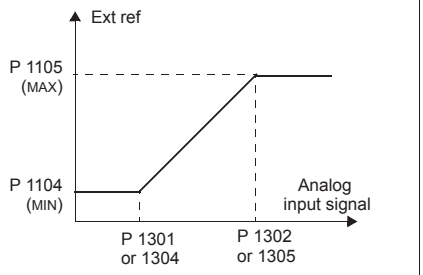

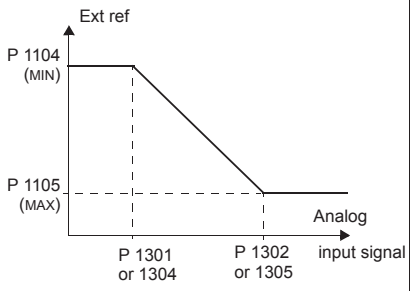

1106	**REF2 SELECT** Selects the signal source for external reference REF2. 0…17 – Same as for parameter 1103 REF1 SELECT. 19 = PID1OUT – The reference is taken from the PID1 output. See *Group 40: PROCESS PID SET 1* and *Group 41: PROCESS PID SET 2*. 20…21 – Same as for parameter 1103 REF1 SELECT.

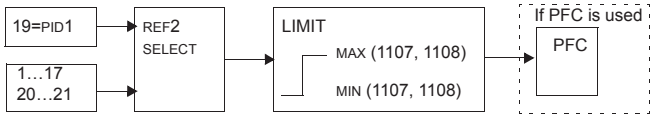

1107	**REF2 MIN** Sets the minimum for external reference 2. • The minimum analog input signal (in volts or amperes) corresponds to REF2 MIN in %. • Parameter 1301 MINIMUM AI1 or 1304 MINIMUM AI2 sets the minimum analog input signal. • This parameter sets the minimum frequency reference. • The value is a percentage of the: – maximum frequency or speed – maximum process reference – nominal torque.
1108	**REF2 MAX** Sets the maximum for external reference 2. • The maximum analog input signal (in volts or amperes) corresponds to REF2 MAX in %. • Parameter 1302 MAXIMUM AI1 or 1305 MAXIMUM AI2 sets the maximum analog input signal. • This parameter sets the maximum frequency reference. • The value is a percentage of the: – maximum frequency or speed – maximum process reference – nominal torque.

Group 12: CONSTANT SPEEDS

This group defines a set of constant speeds. In general:

- You can program up to 7 constant speeds, ranging from 0...500 Hz or 0...30000 rpm.
- Values must be positive (No negative speed values for constant speeds).
- Constant speed selections are ignored if:
  - the torque control is active, or
  - the process PID reference is followed, or
  - the drive is in local control mode, or
  - PFC (Pump-Fan Control) is active.

Note: Parameter 1208 CONST SPEED 7 acts also as a so-called fault speed which may be activated if the control signal is lost. For example, see parameters 3001 AI<MIN FUNCTION, 3002 PANEL COMM ERR and 3018 COMM FAULT FUNC.

Code | **Description**

1201 **CONST SPEED SEL**

Defines the digital inputs used to select Constant Speeds. See general comments in introduction.

0 = NOT SEL – Disables the constant speed function.

1 = DI1 – Selects Constant Speed 1 with digital input DI1.
- Digital input activated = Constant Speed 1 activated.

2…6 = DI2…DI6 – Selects Constant Speed 1 with digital input DI2…DI6. See above.

7 = DI1,2 – Selects one of three Constant Speeds (1…3) using DI1 and DI2.
- Uses two digital inputs, as defined below (0 = DI de-activated, 1 = DI activated):

DI1	DI2	Function
0	0	No constant speed
1	0	Constant speed 1 (1202)
0	1	Constant speed 2 (1203)
1	1	Constant speed 3 (1204)

- Can be set up as a so-called fault speed, which is activated if the control signal is lost. Refer to parameter 3001 AI<MIN function and parameter 3002 PANEL COMM ERR.

8 = DI2,3 – Selects one of three Constant Speeds (1…3) using DI2 and DI3.
- See above (DI1,2) for code.

9 = DI3,4 – Selects one of three Constant Speeds (1…3) using DI3 and DI4.
- See above (DI1,2) for code.

10 = DI4,5 – Selects one of three Constant Speeds (1…3) using DI4 and DI5.
- See above (DI1,2) for code.

11 = DI5,6 – Selects one of three Constant Speeds (1…3) using DI5 and DI6.
- See above (DI1,2) for code.

12 = DI1,2,3 – Selects one of seven Constant Speeds (1…7) using DI1, DI2 and DI3.
- Uses three digital inputs, as defined below (0 = DI de-activated, 1 = DI activated):

DI1	DI2	DI3	Function
0	0	0	No constant speed
1	0	0	Constant speed 1 (1202)
0	1	0	Constant speed 2 (1203)
1	1	0	Constant speed 3 (1204)
0	0	1	Constant speed 4 (1205)
1	0	1	Constant speed 5 (1206)
0	1	1	Constant speed 6 (1207)
1	1	1	Constant speed 7 (1208)

<table>
<tr><th>Code</th><th>Description</th></tr>
<tr><td></td><td>13 = DI3,4,5 – Selects one of seven Constant Speeds (1…7) using DI3, DI4 and DI5.
• See above (DI1,2,3) for code.
14 = DI4,5,6 – Selects one of seven Constant Speeds (1…7) using DI4, DI5 and DI6.
• See above (DI1,2,3) for code.
15…18 = TIMED FUNC 1…4 – Selects Constant Speed 1 when Timed Function is active. See Group 36: TIMED FUNCTIONS.
19 = TIMED FUN1&2 – Selects a constant speed depending on the state of Timed Functions 1 & 2. See parameter 1209.
-1 = DI1(INV) – Selects Constant Speed 1 with digital input DI1.
• Inverse operation: Digital input de-activated = Constant Speed 1 activated.
-2…- 6 = DI2(INV)…DI6(INV) – Selects Constant Speed 1 with digital input. See above.
-7 = DI1,2(INV) – Selects one of three Constant Speeds (1…3) using DI1 and DI2.
• Inverse operation uses two digital inputs, as defined below (0 = DI de-activated, 1 = DI activated):
<table>
<tr><th>DI1</th><th>DI2</th><th>Function</th></tr>
<tr><td>1</td><td>1</td><td>No constant speed</td></tr>
<tr><td>0</td><td>1</td><td>Constant speed 1 (1202)</td></tr>
<tr><td>1</td><td>0</td><td>Constant speed 2 (1203)</td></tr>
<tr><td>0</td><td>0</td><td>Constant speed 3 (1204)</td></tr>
</table>
-8 = DI2,3(INV) – Selects one of three Constant Speeds (1…3) using DI2 and DI3.
• See above (DI1,2(INV)) for code.
-9 = DI3,4(INV) – Selects one of three Constant Speeds (1…3) using DI3 and DI4.
• See above (DI1,2(INV)) for code.
-10 = DI4,5(INV) – Selects one of three Constant Speeds (1…3) using DI4 and DI5.
• See above (DI1,2(INV)) for code.
-11 = DI5,6(INV) – Selects one of three Constant Speeds (1…3) using DI5 and DI6.
• See above (DI1,2(INV)) for code.
-12 = DI1,2,3(INV) – Selects one of seven Constant Speeds (1…7) using DI1, DI2 and DI3.
• Inverse operation uses three digital inputs, as defined below (0 = DI de-activated, 1 = DI activated):
<table>
<tr><th>DI1</th><th>DI2</th><th>DI3</th><th>Function</th></tr>
<tr><td>1</td><td>1</td><td>1</td><td>No constant speed</td></tr>
<tr><td>0</td><td>1</td><td>1</td><td>Constant speed 1 (1202)</td></tr>
<tr><td>1</td><td>0</td><td>1</td><td>Constant speed 2 (1203)</td></tr>
<tr><td>0</td><td>0</td><td>1</td><td>Constant speed 3 (1204)</td></tr>
<tr><td>1</td><td>1</td><td>0</td><td>Constant speed 4 (1205)</td></tr>
<tr><td>0</td><td>1</td><td>0</td><td>Constant speed 5 (1206)</td></tr>
<tr><td>1</td><td>0</td><td>0</td><td>Constant speed 6 (1207)</td></tr>
<tr><td>0</td><td>0</td><td>0</td><td>Constant speed 7 (1208)</td></tr>
</table>
-13 = DI3,4,5(INV) – Selects one of seven Constant Speeds (1…7) using DI3, DI4 and DI5.
• See above (DI1,2,3(INV)) for code.
-14 = DI4,5,6(INV) – Selects one of seven Constant Speeds (1…7) using DI4, DI5 and DI6.
• See above (DI1,2,3(INV)) for code.</td></tr>
<tr><td>1202</td><td>CONST SPEED 1
Sets value for Constant Speed 1.
• The range and units depend on parameter 9904 MOTOR CTRL MODE.
• Range: 0…30000 rpm when 9904 = 1 (VECTOR:SPEED) or 2 (VECTOR:TORQ).
• Range: 0…500 Hz when 9904 = 3 (SCALAR:FREQ).</td></tr>
<tr><td>1203
…
1208</td><td>CONST SPEED 2…CONST SPEED 7
Each sets a value for a Constant Speed. See CONST SPEED 1 above.
Constant Speed 7 is used also as jogging speed. See parameter 1004 JOGGING SEL.</td></tr>
</table>

<table>
<tr><th>Code</th><th>Description</th></tr>
<tr><td>1209</td><td>TIMED MODE SEL
Defines timed function activated, constant speed mode. Timed function can be used to change between external reference and a maximum of three constant speeds, or to change between a maximum of 4 selectable speeds, i.e. constant speeds 1, 2, 3 and 4.
1 = EXT/CS1/2/3 – Selects an external speed when no timed function is active, selects Constant speed 1 when only Timed function 1 is active, Selects Constant speed 2 when only Timed function 2 is active and selects Constant speed 3 when both Timed functions 1 and 2 are active.
<table>
<tr><th>TIMER1</th><th>TIMER2</th><th>Function</th></tr>
<tr><td>0</td><td>0</td><td>External reference</td></tr>
<tr><td>1</td><td>0</td><td>Constant speed 1 (1202)</td></tr>
<tr><td>0</td><td>1</td><td>Constant speed 2 (1203)</td></tr>
<tr><td>1</td><td>1</td><td>Constant speed 3 (1204)</td></tr>
</table>
2 = CS1/2/3/4 – Selects Constant speed 1 when no timer is active, selects Constant speed 2 when only Timed function 1 is active, selects Constant speed 3 when only Timed function 2 is active, selects Constant speed 4 when both Timed functions are active.
<table>
<tr><th>TIMER1</th><th>TIMER2</th><th>Function</th></tr>
<tr><td>0</td><td>0</td><td>Constant speed 1 (1202)</td></tr>
<tr><td>1</td><td>0</td><td>Constant speed 2 (1203)</td></tr>
<tr><td>0</td><td>1</td><td>Constant speed 3 (1204)</td></tr>
<tr><td>1</td><td>1</td><td>Constant speed 4 (1205)</td></tr>
</table></td></tr>
</table>

Group 13: ANALOG INPUTS

This group defines the limits and the filtering for analog inputs.

Code	Description
1301	**MINIMUM AI1** Defines the minimum value of the analog input. • Define value as a percent of the full analog signal range. See example below. • The minimum analog input signal corresponds to 1104 REF1 MIN or 1107 REF2 MIN. • MINIMUM AI cannot be greater than MAXIMUM AI. • These parameters (reference and analog min. and max. settings) provide scale and offset adjustment for the reference. • See the figure at parameter 1104. **Example.** To set the minimum analog input value to 4 mA: • Configure the analog input for 0…20 mA current signal. • Calculate the minimum (4 mA) as a percent of full range (20 mA) = 4 mA / 20 mA · 100% = 20%
1302	**MAXIMUM AI1** Defines the maximum value of the analog input. • Define value as a percent of the full analog signal range. • The maximum analog input signal corresponds to 1105 REF1 MAX or 1108 REF2 MAX. • See the figure at parameter 1104.
1303	**FILTER AI1** Defines the filter time constant for analog input 1 (AI1). • The filtered signal reaches 63% of a step change within the time specified. 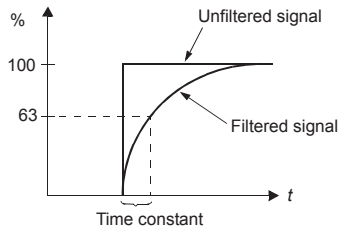
1304	**MINIMUM AI2** Defines the minimum value of the analog input. • See MINIMUM AI1 above.
1305	**MAXIMUM AI2** Defines the maximum value of the analog input. • See MAXIMUM AI1 above.
1306	**FILTER AI2** Defines the filter time constant for analog input 2 (AI2). • See FILTER AI1 above.

Group 14: RELAY OUTPUTS

This group defines the condition that activates each of the relay outputs.

Code	Description
1401	**RELAY OUTPUT 1** Defines the event or condition that activates relay 1 – what relay output 1 means. 0 = NOT SEL – Relay is not used and is de-energized. 1 = READY – Energize relay when drive is ready to function. Requires: • Run enable signal present. • No faults exist. • Supply voltage is within range. • Emergency Stop command is not on. 2 = RUN – Energize relay when the drive is running. 3 = FAULT(-1) – Energize relay when power is applied. De-energizes when a fault occurs. 4 = FAULT – Energize relay when a fault is active. 5 = ALARM – Energize relay when an alarm is active. 6 = REVERSED – Energize relay when motor rotates in reverse direction. 7 = STARTED – Energize relay when drive receives a start command (even if Run Enable signal is not present). De-energized relay when drive receives a stop command or a fault occurs. 8= SUPRV1 OVER – Energize relay when first supervised parameter (3201) exceeds the limit (3203). • See *Group 32: SUPERVISION* starting on page *144*. 9 = SUPRV1 UNDER – Energize relay when first supervised parameter (3201) drops below the limit (3202). • See *Group 32: SUPERVISION* starting on page *144*. 10 = SUPRV2 OVER – Energize relay when second supervised parameter (3204) exceeds the limit (3206). • See *Group 32: SUPERVISION* starting on page *144*. 11 = SUPRV2 UNDER – Energize relay when second supervised parameter (3204) drops below the limit (3205). • See *Group 32: SUPERVISION* starting on page *144*. 12 = SUPRV3 OVER – Energize relay when third supervised parameter (3207) exceeds the limit (3209). • See *Group 32: SUPERVISION* starting on page *144*. 13 = SUPRV3 UNDER – Energize relay when third supervised parameter (3207) drops below the limit (3208). • See *Group 32: SUPERVISION* starting on page *144*. 14 = AT SET POINT – Energize relay when the output frequency is equal to the reference frequency. 15 = FAULT(RST) – Energize relay when the drive is in a fault condition and will reset after the programmed auto-reset delay. • See parameter 3103 DELAY TIME. 16 = FLT/ALARM – Energize relay when fault or alarm occurs. 17 = EXT CTRL – Energize relay when external control is selected. 18 = REF 2 SEL – Energize relay when EXT2 is selected. 19 = CONST FREQ – Energize relay when a constant speed is selected. 20 = REF LOSS – Energize relay when reference or active control place is lost. 21 = OVERCURRENT – Energize relay when an overcurrent alarm or fault occurs. 22 = OVERVOLTAGE – Energize relay when an overvoltage alarm or fault occurs. 23 = DRIVE TEMP – Energize relay when a drive or control board overtemperature alarm or fault occurs. 24 = UNDERVOLTAGE – Energize relay when an undervoltage alarm or fault occurs. 25 = AI1 LOSS – Energize relay when AI1 signal is lost. 26 = AI2 LOSS – Energize relay when AI2 signal is lost. 27 = MOTOR TEMP – Energize relay when a motor overtemperature alarm or fault occurs. 28 = STALL – Energize relay when a stall alarm or fault exists. 30 = PID SLEEP – Energize relay when the PID sleep function is active. 31 = PFC – Use relay to start/stop motor in PFC control (See *Group 81: PFC CONTROL*). • Use this option only when PFC control is used. • Selection activated / deactivated when drive is not running. 32 = AUTOCHANGE – Energize relay when PFC autochange operation is performed. • Use this option only when PFC control is used. 33 = FLUX READY – Energize relay when the motor is magnetized and able to supply nominal torque (motor has reached nominal magnetizing). 34 = USER MACRO 2 – Energize relay when User Parameter Set 2 is active.

<table>
<tr><th>Code</th><th>Description</th></tr>
<tr><td></td><td>35 = COMM – Energize relay based on input from fieldbus communication.
• Fieldbus writes binary code in parameter 0134 that can energize relay 1…relay 6 according to the following:
<table><tr><th>Par. 0134</th><th>Binary</th><th>RO6</th><th>RO5</th><th>RO4</th><th>RO3</th><th>RO2</th><th>RO1</th></tr><tr><td>0</td><td>000000</td><td>0</td><td>0</td><td>0</td><td>0</td><td>0</td><td>0</td></tr><tr><td>1</td><td>000001</td><td>0</td><td>0</td><td>0</td><td>0</td><td>0</td><td>1</td></tr><tr><td>2</td><td>000010</td><td>0</td><td>0</td><td>0</td><td>0</td><td>1</td><td>0</td></tr><tr><td>3</td><td>000011</td><td>0</td><td>0</td><td>0</td><td>0</td><td>1</td><td>1</td></tr><tr><td>4</td><td>000100</td><td>0</td><td>0</td><td>0</td><td>1</td><td>0</td><td>0</td></tr><tr><td>5…62</td><td>…</td><td>…</td><td>…</td><td>…</td><td>…</td><td>…</td><td>…</td></tr><tr><td>63</td><td>111111</td><td>1</td><td>1</td><td>1</td><td>1</td><td>1</td><td>1</td></tr></table>• 0 = De-energize relay, 1 = Energize relay.
36 = COMM(-1) – Energize relay based on input from fieldbus communication.
• Fieldbus writes binary code in parameter 0134 that can energize relay 1…relay 6 according to the following:
<table><tr><th>Par. 0134</th><th>Binary</th><th>RO6</th><th>RO5</th><th>RO4</th><th>RO3</th><th>RO2</th><th>RO1</th></tr><tr><td>0</td><td>000000</td><td>1</td><td>1</td><td>1</td><td>1</td><td>1</td><td>1</td></tr><tr><td>1</td><td>000001</td><td>1</td><td>1</td><td>1</td><td>1</td><td>1</td><td>0</td></tr><tr><td>2</td><td>000010</td><td>1</td><td>1</td><td>1</td><td>1</td><td>0</td><td>1</td></tr><tr><td>3</td><td>000011</td><td>1</td><td>1</td><td>1</td><td>1</td><td>0</td><td>0</td></tr><tr><td>4</td><td>000100</td><td>1</td><td>1</td><td>1</td><td>0</td><td>1</td><td>1</td></tr><tr><td>5…62</td><td>…</td><td>…</td><td>…</td><td>…</td><td>…</td><td>…</td><td>…</td></tr><tr><td>63</td><td>111111</td><td>0</td><td>0</td><td>0</td><td>0</td><td>0</td><td>0</td></tr></table>• 0 = De-energize relay, 1 = Energize relay.
37 = TIMED FUNC 1 – Energize relay when Timed Function 1 is active. See Group 36: TIMED FUNCTIONS.
38…40 = TIMED FUNC 2…4 – Energize relay when Timed Function 2…4 is active. See TIMED FUNC 1 above.
41 = MNT TRIG FAN – Energize relay when cooling fan counter is triggered. See Group 29: MAINTENANCE TRIG.
42 = MNT TRIG REV – Energize relay when revolutions counter is triggered. See Group 29: MAINTENANCE TRIG.
43 = MNT TRIG RUN – Energize relay when run time counter is triggered. See Group 29: MAINTENANCE TRIG.
44 = MNT TRIG MWH – Energize relay when MWh counter is triggered. See Group 29: MAINTENANCE TRIG.
46 = START DELAY – Energize relay when a start delay is active.
47 = USER LOAD C – Energize relay when a user load curve fault or alarm occurs.
52 = JOG ACTIVE – Energize relay when the jogging function is active.</td></tr>
<tr><td>1402</td><td>RELAY OUTPUT 2
Defines the event or condition that activates relay 2 – what relay output 2 means.
• See 1401 RELAY OUTPUT 1.</td></tr>
<tr><td>1403</td><td>RELAY OUTPUT 3
Defines the event or condition that activates relay 3 – what relay output 3 means.
• See 1401 RELAY OUTPUT 1.</td></tr>
<tr><td>1404</td><td>RO 1 ON DELAY
Defines the switch-on delay for relay 1.
• On / off delays are ignored when relay output 1401 is set to PFC.</td></tr>
<tr><td>1405</td><td>RO 1 OFF DELAY
Defines the switch-off delay for relay 1.
• On / off delays are ignored when relay output 1401 is set to PFC.</td></tr>
<tr><td></td><td> 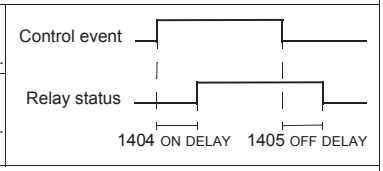
</td></tr>
<tr><td>1406</td><td>RO 2 ON DELAY
Defines the switch-on delay for relay 2.
• See RO 1 ON DELAY.</td></tr>
<tr><td>1407</td><td>RO 2 OFF DELAY
Defines the switch-off delay for relay 2.
• See RO 1 OFF DELAY.</td></tr>
<tr><td>1408</td><td>RO 3 ON DELAY
Defines the switch-on delay for relay 3.
• See RO 1 ON DELAY.</td></tr>
</table>

Code	Description
1409	**RO 3 OFF DELAY** Switch-off delay for relay 3. • See RO 1 OFF DELAY.
1410 … 1412	**RELAY OUTPUT 4…6** Defines the event or condition that activates relay 4…6 – what relay output 4…6 means. • See 1401 RELAY OUTPUT 1.
1413	**RO 4 ON DELAY** Defines the switch-on delay for relay 4. • See RO 1 ON DELAY.
1414	**RO 4 OFF DELAY** Defines the switch-off delay for relay 4. • See RO 1 OFF DELAY.
1415	**RO 5 ON DELAY** Defines the switch-on delay for relay 5. • See RO 1 ON DELAY.
1416	**RO 5 OFF DELAY** Defines the switch-off delay for relay 5. • See RO 1 OFF DELAY.
1417	**RO 6 ON DELAY** Defines the switch-on delay for relay 6. • See RO 1 ON DELAY.
1418	**RO 6 OFF DELAY** Defines the switch-off delay for relay 6. • See RO 1 OFF DELAY.

Group 15: ANALOG OUTPUTS

This group defines the drive's analog (current signal) outputs. The drive's analog outputs can be:

- any parameter in *Group 01: OPERATING DATA*
- limited to programmable minimum and maximum values of output current
- scaled (and/or inverted) by defining the minimum and maximum values of the source parameter (or content). Defining an maximum value (parameter 1503 or 1509) that is less than the content minimum value (parameter 1502 or 1508) results in an inverted output.
- filtered.

Code	Description
1501	**AO1 CONTENT SEL** Defines the content for analog output AO1. 99 = EXCITE PTC – Provides a current source for sensor type PTC. Output = 1.6 mA. See *Group 35: MOTOR TEMP MEAS*. 100 = EXCITE PT100 – Provides a current source for sensor type PT100. Output = 9.1 mA. See *Group 35: MOTOR TEMP MEAS*. 101…159 – Output corresponds to a parameter in *Group 01: OPERATING DATA*. • Parameter defined by value (value 102 = parameter 0102)
1502	**AO1 CONTENT MIN** Sets the minimum content value. • Content is the parameter selected by parameter 1501. • Minimum value refers to the minimum content value that will be converted to an analog output. • These parameters (content and current min. and max. settings) provide scale and offset adjustment for the output. See the figure.
1503	**AO1 CONTENT MAX** Sets the maximum content value • Content is the parameter selected by parameter 1501. • Maximum value refers to the maximum content value that will be converted to an analog output.
1504	**MINIMUM AO1** Sets the minimum output current.
1505	**MAXIMUM AO1** Sets the maximum output current.
1506	**FILTER AO1** Defines the filter time constant for AO1. • The filtered signal reaches 63% of a step change within the time specified. • See the figure in parameter 1303.
1507	**AO2 CONTENT SEL** Defines the content for analog output AO2. See AO1 CONTENT SEL above.
1508	**AO2 CONTENT MIN** Sets the minimum content value. See AO1 CONTENT MIN above.
1509	**AO2 CONTENT MAX** Sets the maximum content value. See AO1 CONTENT MAX above.
1510	**MINIMUM AO2** Sets the minimum output current. See MINIMUM AO1 above.

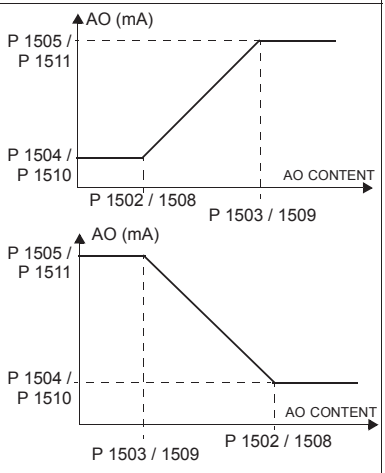

Code	Description
1511	**MAXIMUM AO2** Sets the maximum output current. See MAXIMUM AO1 above.
1512	**FILTER AO2** Defines the filter time constant for AO2. See FILTER AO1 above.

Group 16: SYSTEM CONTROLS

This group defines a variety of system level locks, resets and enables.

Code	Description
1601	**RUN ENABLE** Selects the source of the run enable signal. 0 = NOT SEL – Allows the drive to start without an external run enable signal. 1 = DI1 – Defines digital input DI1 as the run enable signal. • This digital input must be activated for run enable. • If the voltage drops and de-activates this digital input, the drive will coast to stop and not start until the run enable signal resumes. 2…6 = DI2…DI6 – Defines digital input DI2…DI6 as the run enable signal. • See DI1 above. 7 = COMM – Assigns the fieldbus Command Word as the source for the run enable signal. • Bit 6 of the Command Word 1 (parameter 0301) activates the run disable signal. • See fieldbus user's manual for detailed instructions. -1 = DI1(INV) – Defines an inverted digital input DI1 as the run enable signal. • This digital input must be de-activated for run enable. • If this digital input activates, the drive will coast to stop and not start until the run enable signal resumes. -2…-6 = DI2(INV)…DI6(INV) – Defines an inverted digital input DI2…DI6 as the run enable signal. • See DI1(INV) above.
1602	**PARAMETER LOCK** Determines if the control panel can change parameter values. • This lock does not limit parameter changes made by macros. • This lock does not limit parameter changes written by fieldbus inputs. • This parameter value can be changed only if the correct pass code is entered. See parameter 1603 PASS CODE. 0 = LOCKED – You cannot use the control panel to change parameter values. • The lock can be opened by entering the valid pass code to parameter 1603. 1 = OPEN – You can use the control panel to change parameter values. 2 = NOT SAVED – You can use the control panel to change parameter values, but they are not stored in permanent memory. • Set parameter 1607 PARAM SAVE to 1 (SAVE) to store changed parameter values to memory.
1603	**PASS CODE** Entering the correct pass code allows you to change the parameter lock. • See parameter 1602 above. • The code 358 allows you to change the value of the parameter 1602 once. • This entry reverts back to 0 automatically.
1604	**FAULT RESET SEL** Selects the source for the fault reset signal. The signal resets the drive after a fault trip if the cause of the fault no longer exists. 0 = KEYPAD – Defines the control panel as the only fault reset source. • Fault reset is always possible with control panel. 1 = DI1 – Defines digital input DI1 as a fault reset source. • Activating the digital input resets the drive. 2…6 = DI2…DI6 – Defines digital input DI2…DI6 as a fault reset source. • See DI1 above. 7 = START/STOP – Defines the Stop command as a fault reset source. • Do not use this option when fielbus communication provides the start, stop and direction commands. 8 = COMM – Defines the fieldbus as a fault reset source. • The Command Word is supplied through fieldbus communication. • The bit 4 of the Command Word 1 (parameter 0301) resets the drive. -1 = DI1(INV) – Defines an inverted digital input DI1 as a fault reset source. • De-activating the digital input resets the drive. -2…-6 = DI2(INV)…DI6(INV) – Defines an inverted digital input DI2…DI6 as a fault reset source. • See DI1(INV) above.

Code	Description
1605	**USER PAR SET CHG** Defines control for changing the user parameter set. • See parameter 9902 APPLIC MACRO. • The drive must be stopped to change User Parameter Sets. • During a change, the drive will not start. **Note:** Always save the User Parameter Set after changing any parameter settings, or performing a motor identification. • Whenever the power is cycled, or parameter 9902 APPLIC MACRO is changed, the drive loads the last settings saved. Any unsaved changes to a user parameter set are lost. **Note:** The value of this parameter (1605) is not included in the User Parameter Sets, and it does not change if User Parameter Sets change. **Note:** You can use a relay output to supervise the selection of User Parameter Set 2. • See parameter 1401. 0 = NOT SEL – Defines the control panel (using parameter 9902) as the only control for changing User Parameter Sets. 1 = DI1 – Defines digital input DI1 as a control for changing User Parameter Sets. • The drive loads User Parameter Set 1 on the falling edge of the digital input. • The drive loads User Parameter Set 2 on the rising edge of the digital input. • The User Parameter Set changes only when the drive is stopped. 2…6 = DI2…DI6 – Defines digital input DI2…DI6 as a control for changing User Parameter Sets. • See DI1 above. -1 = DI1(INV) – Defines an inverted digital input DI1 as a control for changing User Parameter Sets. • The drive loads User Parameter Set 1 on the rising edge of the digital input. • The drive loads User Parameter Set 2 on the falling edge of the digital input. • The User Parameter Set changes only when the drive is stopped. -2…-6 = DI2(INV)…DI6(INV) – Defines an inverted digital input DI2…DI6 as a control for changing User Parameter Sets. • See DI1(INV) above.
1606	**LOCAL LOCK** Defines control for the use of the LOC mode. The LOC mode allows drive control from the control panel. • When LOCAL LOCK is active, the control panel cannot change to LOC mode. 0 = NOT SEL – Disables the lock. The control panel can select LOC and control the drive. 1 = DI1 – Defines digital input DI1 as the control for setting the local lock. • Activating the digital input locks out local control. • De-activating the digital input enable the LOC selection. 2…6 = DI2…DI6 – Defines digital input DI2…DI6 as the control for setting the local lock. • See DI1 above. 7 = ON – Sets the lock. The control panel cannot select LOC and cannot control the drive. 8 = COMM – Defines bit 14 of the Command Word 1 as the control for setting the local lock. • The Command Word is supplied through fieldbus communication. • The Command Word is 0301. -1 = DI1(INV) – Defines an inverted digital input DI1 as the control for setting the local lock. • De-activating the digital input locks out local control. • Activating the digital input enable the LOC selection. -2…-6 = DI2(INV)…DI6(INV) – Defines an inverted digital input DI2…DI6 as the control for setting the local lock. • See DI1(INV) above.
1607	**PARAM SAVE** Saves all altered parameters to permanent memory. • Parameters altered through a fieldbus are not automatically saved to permanent memory. To save, you must use this parameter. • If 1602 PARAMETER LOCK = 2 (NOT SAVED), parameters altered from the control panel are not saved. To save, you must use this parameter. • If 1602 PARAMETER LOCK = 1 (OPEN), parameters altered from the control panel are stored immediately to permanent memory. 0 = DONE – Value changes automatically when all parameters are saved. 1 = SAVE… – Saves altered parameters to permanent memory.

Code	Description
1608	**START ENABLE 1** Selects the source of the start enable 1 signal. **Note:** Start enable functionality differs from the run enable functionality. 0 = NOT SEL – Allows the drive to start without an external start enable signal. 1 = DI1 – Defines digital input DI1 as the start enable 1 signal. • This digital input must be activated for start enable 1 signal. • If the voltage drops and de-activates this digital input, the drive will coast to stop and show alarm 2021 on the panel display. The drive will not start until start enable 1 signal resumes. 2…6 = DI2…DI6 – Defines digital input DI2…DI6 as the start enable 1 signal. • See DI1 above. 7 = COMM – Assigns the fieldbus Command Word as the source for the start enable 1 signal. • Bit 2 of the Command word 2 (parameter 0302) activates the start disable 1 signal. • See fieldbus user's manual for detailed instructions. -1 = DI1(INV) – Defines an inverted digital input DI1 as the start enable 1 signal. -2…-6 = DI2 (INV)…DI6(INV) – Defines an inverted digital input DI2…DI6 as the start enable 1 signal. • See DI1 (INV) above. 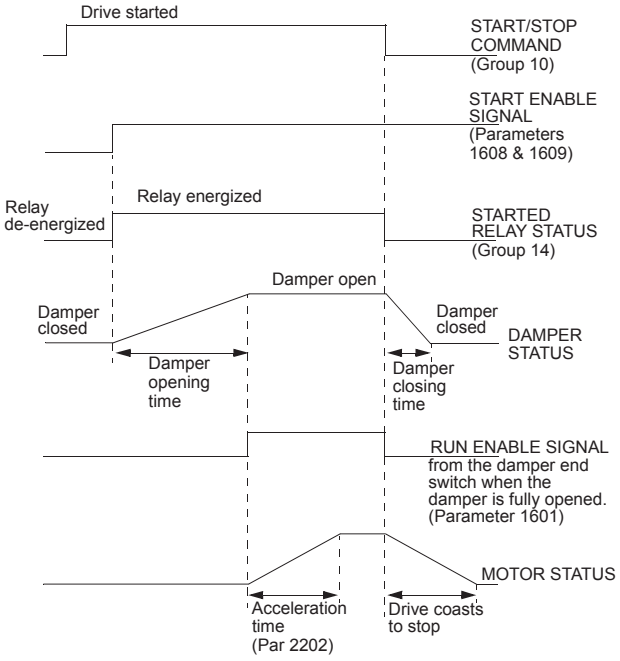

Code	Description
1609	**START ENABLE 2** Selects the source of the start enable 2 signal. **Note:** Start enable functionality differs from the run enable functionality. 0 = NOT SEL – Allows the drive to start without an external start enable signal. 1 = DI1 – Defines digital input DI1 as the start enable 2 signal. • This digital input must be activated for start enable 2 signal. • If the voltage drops and de-activates this digital input, the drive will coast to stop and show alarm 2022 on panel display. The drive will not start until start enable 2 signal resumes. 2…6 = DI2…DI6 – Defines digital input DI2…DI6 as the start enable 2 signal. • See DI1 above. 7 = COMM – Assigns the fieldbus Command Word as the source for the start enable 2 signal. Bit 3 of the Command word 2 (parameter 0302) activates the start disable 2 signal. • See fieldbus user's manual for detailed instructions. -1 = DI1(INV) – Defines an inverted digital input DI1 as the start enable 2 signal. -2…-6 = DI2(INV)…DI6(INV) – Defines an inverted digital input DI2…DI6 as the start enable 2 signal. • See DI1 (INV) above.
1610	**DISPLAY ALARMS** Controls the visibility of the following alarms: • 2001, Overcurrent alarm • 2002, Overvoltage alarm • 2003, Undervoltage alarm • 2009, Device overtemperature alarm. For more information, see section *Alarm listing* on page *250*. 0 = NO – The above alarms are suppressed. 1 = YES – All of the above alarms are enabled.
1611	**PARAMETER VIEW** Selects the parameter view, i.e. which parameters are shown. **Note:** This parameter is visible only when it is activated by the optional FlashDrop device. FlashDrop is designed for fast copying of parameters to unpowered drives. It allows easy customization of the parameter list, e.g. selected parameters can be hidden. For more information, see *MFDT-01 FlashDrop User's Manual* [3AFE68591074 (English)]. FlashDrop parameter values are activated by setting parameter 9902 to 31 (LOAD FD SET). 0 = DEFAULT – Complete long and short parameter lists are shown. 1 = FLASHDROP – FlashDrop parameter list is shown. Does not include short parameter list. Parameters that are hidden by the FlashDrop device are not visible.

Group 20: LIMITS

This group defines minimum and maximum limits to follow in driving the motor – speed, frequency, current, torque, etc.

Code	Description
2001	**MINIMUM SPEED** Defines the minimum speed (rpm) allowed. • A positive (or zero) minimum speed value defines two ranges, one positive and one negative. • A negative minimum speed value defines one speed range. • See the figure. 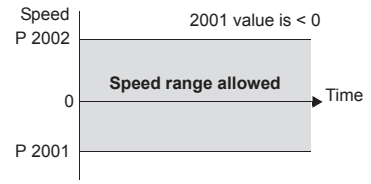
2002	**MAXIMUM SPEED** Defines the maximum speed (rpm) allowed. 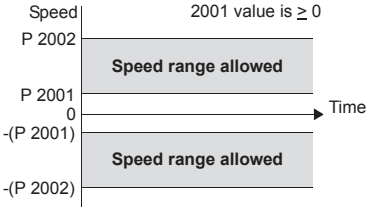
2003	**MAX CURRENT** Defines the maximum output current (A) supplied by the drive to the motor.
2005	**OVERVOLT CTRL** Sets the DC overvoltage controller on or off. • Fast braking of a high inertia load causes the DC bus voltage to rise to the overvoltage control limit. To prevent the DC voltage from exceeding the trip limit, the overvoltage controller automatically decreases the braking torque by increasing output frequency. 0 = DISABLE – Disables controller. 1 = ENABLE – Enables controller **Note:** If a braking chopper or a braking resistor is connected to the drive, this parameter value must be set to 0 (DISABLE) to ensure proper operation of the chopper.
2006	**UNDERVOLT CTRL** Sets the DC undervoltage controller on or off. When on: • If the DC bus voltage drops due to loss of input power, the undervoltage controller decreases the motor speed in order to keep the DC bus voltage above the lower limit. • When the motor speed decreases, the inertia of the load causes regeneration back into the drive, keeping the DC bus charged and preventing an undervoltage trip. • The DC undervoltage controller increases power loss ride-through on systems with a high inertia, such as a centrifuge or a fan. 0 = DISABLE – Disables controller. 1 = ENABLE(TIME) – Enables controller with 500 ms time limit for operation. 2 = ENABLE – Enables controller without maximum time limit for operation.

Code	Description
2007	**MINIMUM FREQ** Defines the minimum limit for the drive output frequency. • A positive or zero minimum frequency value defines two ranges, one positive and one negative. • A negative minimum frequency value defines one speed range. See the figure. **Note:** Keep MINIMUM FREQ ≤ MAXIMUM FREQ.
2008	**MAXIMUM FREQ** Defines the maximum limit for the drive output frequency.
	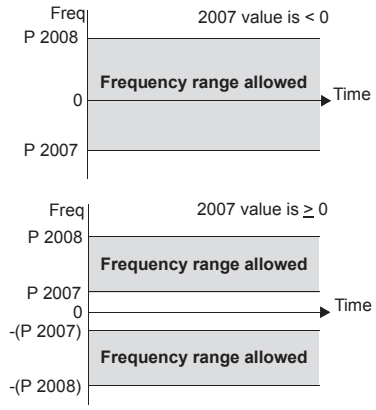
2013	**MIN TORQUE SEL** Defines control of the selection between two minimum torque limits (2015 MIN TORQUE 1 and 2016 MIN TORQUE 2). 0 = MIN TORQUE 1 – Selects 2015 MIN TORQUE 1 as the minimum limit used. 1 = DI1 – Defines digital input DI1 as the control for selecting the minimum limit used. • Activating the digital input selects MIN TORQUE 2 value. • De-activating the digital input selects MIN TORQUE 1 value. 2…6 = DI2…DI6 – Defines digital input DI2…DI6 as the control for selecting the minimum limit used. • See DI1 above. 7 = COMM – Defines bit 15 of the Command Word 1 as the control for selecting the minimum limit used. • The Command Word is supplied through fieldbus communication. • The Command Word is parameter 0301. -1 = DI1(INV) – Defines an inverted digital input DI1 as the control for selecting the minimum limit used. • Activating the digital input selects MIN TORQUE 1 value. • De-activating the digital input selects MIN TORQUE 2 value. -2…-6 = DI2(INV)…DI6(INV) – Defines an inverted digital input DI2…DI6 as the control for selecting the minimum limit used. • See DI1(INV) above.
2014	**MAX TORQUE SEL** Defines control of the selection between two maximum torque limits (2017 MAX TORQUE 1 and 2018 MAX TORQUE 2). 0 = MAX TORQUE 1 – Selects 2017 MAX TORQUE 1 as the maximum limit used. 1 = DI1 – Defines digital input DI1 as the control for selecting the maximum limit used. • Activating the digital input selects MAX TORQUE 2 value. • De-activating the digital input selects MAX TORQUE 1 value. 2…6 = DI2…DI6 – Defines digital input DI2…DI6 as the control for selecting the maximum limit used. • See DI1 above. 7 = COMM – Defines bit 15 of the Command Word 1 as the control for selecting the maximum limit used. • The Command Word is supplied through fieldbus communication. • The Command Word is parameter 0301. -1 = DI1(INV) – Defines an inverted digital input di1 as the control for selecting the maximum limit used. • Activating the digital input selects MAX TORQUE 1 value. • De-activating the digital input selects MAX TORQUE 2 value. -2…-6 = DI2(INV)…DI6(INV) – Defines an inverted digital input DI2…DI6 as the control for selecting the maximum limit used. • See DI1(INV) above.
2015	**MIN TORQUE 1** Sets the first minimum limit for torque (%). Value is a percent of the motor nominal torque.
2016	**MIN TORQUE 2** Sets the second minimum limit for torque (%). Value is a percent of the motor nominal torque.

Code	Description
2017	**MAX TORQUE 1** Sets the first maximum limit for torque (%). Value is a percent of the motor nominal torque.
2018	**MAX TORQUE 2** Sets the second maximum limit for torque (%). Value is a percent of the motor nominal torque.

Group 21: START/STOP

This group defines how the motor starts and stops. The ACS550 supports several start and stop modes.

Code	Description
2101	**START FUNCTION** Selects the motor start method. The valid options depend on the value of parameter 9904 MOTOR CTRL MODE. 1 = AUTO – Selects the automatic start mode. • Vector control modes: Optimal start in most cases. The drive automatically selects the correct output frequency to start a rotating motor. • SCALAR:FREQ mode: Immediate start from zero frequency. 2 = DC MAGN – Selects the DC Magnetizing start mode. **Note:** The DC Magnetizing start mode cannot start a rotating motor. **Note:** The drive starts when the set pre-magnetizing time (parameter 2103 DC MAGN TIME) has passed, even if motor magnetization is not complete. • Vector control modes: Magnetizes the motor within the time determined by the parameter 2103 DC MAGN TIME using DC current. The normal control is released exactly after the magnetizing time. This selection guarantees the highest possible break-away torque. • SCALAR:FREQ mode: Magnetizes the motor within the time determined by the parameter 2103 DC MAGN TIME using DC current. The normal control is released exactly after the magnetizing time. 3 = SCALAR FLYST – Selects the flying start mode. • Vector control modes: Not applicable. • SCALAR:FREQ mode: The drive automatically selects the correct output frequency to start a rotating motor – useful if the motor is already rotating and if the drive will start smoothly at the current frequency. 4 = TORQ BOOST – Selects the automatic torque boost mode (SCALAR:FREQ mode only). • May be necessary in drives with high starting torque. • Torque boost is only applied at start, ending when output frequency exceeds 20 Hz or when output frequency is equal to reference. • In the beginning the motor magnetizes within the time determined by the parameter 2103 DC MAGN TIME using DC current. • See parameter 2110 TORQ BOOST CURR. 5 = FLY + BOOST – Selects both the flying start and the torque boost mode (SCALAR:FREQ mode only). • Flying start routine is performed first and the motor is magnetized. If the speed is found to be zero, the torque boost is done. 8 = RAMP – Immediate start from zero frequency.
2102	**STOP FUNCTION** Selects the motor stop method. 1 = COAST – Selects cutting off the motor power as the stop method. The motor coasts to stop. 2 = RAMP – Selects using a deceleration ramp. • Deceleration ramp is defined by 2203 DECELER TIME 1 or 2206 DECELER TIME 2 (whichever is active).
2103	**DC MAGN TIME** Defines the pre-magnetizing time for the DC Magnetizing start mode. • Use parameter 2101 to select the start mode. • After the start command, the drive pre-magnetizes the motor for the time defined here and then starts the motor. • Set the pre-magnetizing time just long enough to allow full motor magnetization. Too long a time heats the motor excessively.
2104	**DC HOLD CTL** Selects whether DC current is used for braking or DC Hold. 0 = NOT SEL – Disables the DC current operation. 1 = DC HOLD – Enables the DC Hold function. See the diagram. • Requires parameter 9904 MOTOR CTRL MODE = 1 (VECTOR:SPEED) • Stops generating sinusoidal current and injects DC into the motor when both the reference and the motor speed drop below the value of parameter 2105. • When the reference rises above the level of parameter 2105 the drive resumes normal operation. 2 = DC BRAKING – Enables the DC Injection Braking after modulation has stopped. • If parameter 2102 STOP FUNCTION is 1 (COAST), braking is applied after start is removed. • If parameter 2102 STOP FUNCTION is 2 (RAMP), braking is applied after ramp. 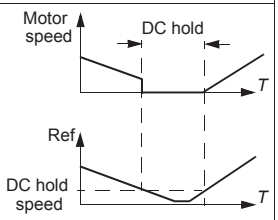

Code	Description
2105	**DC HOLD SPEED** Sets the speed for DC Hold. Requires that parameter 2104 DC HOLD CTL = 1 (DC HOLD).
2106	**DC CURR REF** Defines the DC current control reference as a percentage of parameter 9906 MOTOR NOM CURR.
2107	**DC BRAKE TIME** Defines the DC brake time after modulation has stopped, if parameter 2104 is 2 (DC BRAKING).
2108	**START INHIBIT** Sets the Start inhibit function on or off. The Start inhibit function ignores a pending start command in any of the following situations (a new start command is required): • A fault is reset. • Run Enable (parameter 1601) activates while start command is active. • Mode changes from local to remote. • Control switches from EXT1 to EXT2. • Control switches from EXT2 to EXT1. 0 = OFF – Disables the Start inhibit function. 1 = ON – Enables the Start inhibit function.
2109	**EMERG STOP SEL** Defines control of the Emergency stop command. When activated: • Emergency stop decelerates the motor using the emergency stop ramp (parameter 2208 EMERG DEC TIME). • Requires an external stop command and removal of the emergency stop command before drive can restart. 0 = NOT SEL – Disables the Emergency stop function through digital inputs. 1 = DI1 – Defines digital input DI1 as the control for Emergency stop command. • Activating the digital input issues an Emergency stop command. • De-activating the digital input removes the Emergency stop command. 2…6 = DI2…DI6 – Defines digital input DI2…DI6 as the control for Emergency stop command. • See DI1 above. -1 = DI1(INV) – Defines an inverted digital input DI1 as the control for Emergency stop command. • De-activating the digital input issues an Emergency stop command. • Activating the digital input removes the Emergency stop command. -2…-6 = DI2(INV)…DI6(INV) – Defines an inverted digital input DI2…DI6 as the control for Emergency stop command. • See DI1(INV) above.
2110	**TORQ BOOST CURR** Sets the maximum supplied current during torque boost. • See parameter 2101 START FUNCTION.

Code	Description
2112	**ZERO SPEED DELAY** Defines the delay for the Zero Speed Delay function. If parameter value is set to zero, the Zero Speed Delay function is disabled. The function is useful in applications where a smooth and quick restarting is essential. During the delay the drive knows accurately the rotor position. **No Zero Speed Delay** **With Zero Speed Delay** 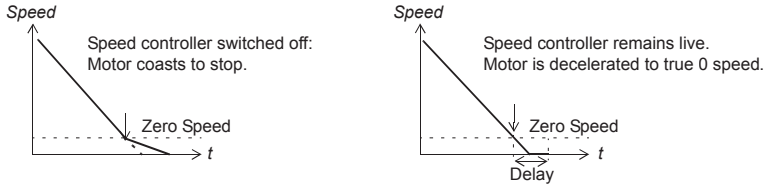 Zero speed delay can be used e.g. with jogging function or mechanical brake. **No Zero Speed Delay** The drive receives a stop command and decelerates along a ramp. When the motor actual speed falls below an internal limit (called Zero Speed), the speed controller is switched off. The drive modulation is stopped and the motor coasts to standstill. **With Zero Speed Delay** The drive receives a stop command and decelerates along a ramp. When the motor actual speed falls below an internal limit (called Zero Speed), the zero speed delay function activates. During the delay the functions keeps the speed controller live: The drive modulates, motor is magnetized and drive is ready for a quick restart. **Note:** Parameter 2102 STOP FUNCTION must be 2 = RAMP for zero speed delay to operate. 0.0 = NOT SEL – Disables the Zero Speed Delay function.
2113	**START DELAY** Defines the Start delay. After the conditions for start have been fulfilled, the drive waits until the delay has elapsed and then starts the motor. Start delay can be used with all start modes. • If START DELAY = zero, the delay is disabled. • During the Start delay, alarm 2028 START DELAY is shown.

Group 22: ACCEL/DECEL

This group defines ramps that control the rate of acceleration and deceleration. You define these ramps as a pair, one for acceleration and one for deceleration. You can define two pairs of ramps and use a digital input to select one or the other pair.

Code	Description
2201	**ACC/DEC 1/2 SEL** Defines control for selection of acceleration/deceleration ramps. • Ramps are defined in pairs, one each for acceleration and deceleration. • See below for the ramp definition parameters. 0 = NOT SEL – Disables selection, the first ramp pair is used. 1 = DI1 – Defines digital input DI1 as the control for ramp pair selection. • Activating the digital input selects ramp pair 2. • De-activating the digital input selects ramp pair 1. 2…6 = DI2…DI6 – Defines digital input DI2…DI6 as the control for ramp pair selection. • See DI1 above. 7 = COMM – Defines bit 10 of the Command Word 1 as the control for ramp pair selection. • The Command Word is supplied through fieldbus communication. • The Command Word is parameter 0301. -1 = DI1(INV) – Defines an inverted digital input DI1 as the control for ramp pair selection. • De-activating the digital input selects ramp pair 2 • Activating the digital input selects ramp pair 1. -2…-6 = DI2(INV)…DI6(INV) – Defines an inverted digital input DI2…DI6 as the control for ramp pair selection. • See DI1(INV) above.
2202	**ACCELER TIME 1** Sets the acceleration time for zero to maximum frequency for ramp pair 1. See A in the figure. • Actual acceleration time also depends on 2204 RAMP SHAPE 1. • See 2008 MAXIMUM FREQ.
2203	**DECELER TIME 1** Sets the deceleration time for maximum frequency to zero for ramp pair 1. • Actual deceleration time also depends on 2204 RAMP SHAPE 1. • See 2008 MAXIMUM FREQ.
2204	**RAMP SHAPE 1** Selects the shape of the acceleration/deceleration ramp for ramp pair 1. See B in the figure. • Shape is defined as a ramp, unless additional time is specified here to reach the maximum frequency. A longer time provides a softer transition at each end of the slope. The shape becomes an s-curve. • Rule of thumb: 1/5 is a suitable relation between the ramp shape time and the acceleration ramp time. 0.0 = LINEAR – Specifies linear acceleration/deceleration ramps for ramp pair 1. 0.1…1000.0 = S-CURVE – Specifies s-curve acceleration/deceleration ramps for ramp pair 1.
	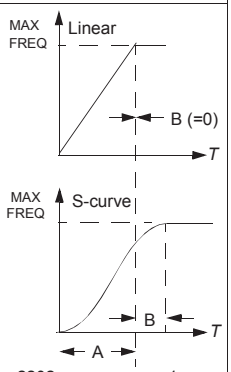 A = 2202 ACCELER TIME 1 B = 2204 RAMP SHAPE 1
2205	**ACCELER TIME 2** Sets the acceleration time for zero to maximum frequency for ramp pair 2. • See 2202 ACCELER TIME 1. • Used also as jogging acceleration time. See 1004 JOGGING SEL.
2206	**DECELER TIME 2** Sets the deceleration time for maximum frequency to zero for ramp pair 2. • See 2203 DECELER TIME 1. • Used also as jogging deceleration time. See 1004 JOGGING SEL.
2207	**RAMP SHAPE 2** Selects the shape of the acceleration/deceleration ramp for ramp pair 2. • See 2204 RAMP SHAPE 1.

Code	Description
2208	**EMERG DEC TIME** Sets the deceleration time for maximum frequency to zero for an emergency. • See parameter 2109 EMERG STOP SEL. • Ramp is linear.
2209	**RAMP INPUT 0** Defines control for forcing the ramp input to 0. 0 = NOT SEL – Not selected. 1 = DI1 – Defines digital input DI1 as the control for forcing the ramp input to 0. • Activating the digital input forces ramp input to 0. Ramp output will ramp to 0 according to the currently used ramp time, after which it will stay at 0. • De-activating the digital input: ramp resumes normal operation. 2…6 = DI2…DI6 – Defines digital input DI2…DI6 as the control for forcing the ramp input to 0. • See DI1 above. 7 = COMM – Defines bit 13 of the Command Word 1 as the control for forcing the ramp input to 0. • The Command Word is supplied through fieldbus communication. • The Command Word is parameter 0301. -1 = DI1(INV) – Defines an inverted digital input DI1 as the control for forcing the ramp input to 0. • De-activating the digital input forces ramp input to 0. • Activating the digital input: ramp resumes normal operation. -2…-6 = DI2(INV)…DI6(INV) – Defines an inverted digital input DI2…DI6 as the control for forcing the ramp function generator input to 0. • See DI1(INV) above.

Group 23: SPEED CONTROL

This group defines variables used for speed control operation.

Code	Description
2301	**PROP GAIN** Sets the relative gain for the speed controller. • Larger values may cause speed oscillation. • The figure shows the speed controller output after an error step (error remains constant). **Note:** You can use parameter 2305 AUTOTUNE RUN to automatically set the proportional gain. 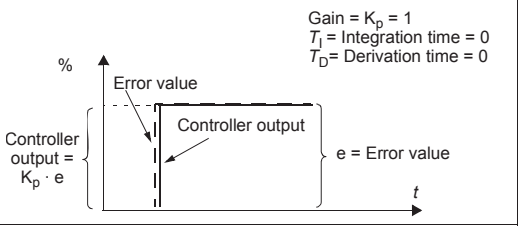
2302	**INTEGRATION TIME** Sets the integration time for the speed controller. • The integration time defines the rate at which the controller output changes for a constant error value. • Shorter integration times correct continuous errors faster. • Control becomes unstable if the integration time is too short. • The figure shows the speed controller output after an error step (error remains constant). **Note:** You can use parameter 2305 AUTOTUNE RUN to automatically set the integration time. 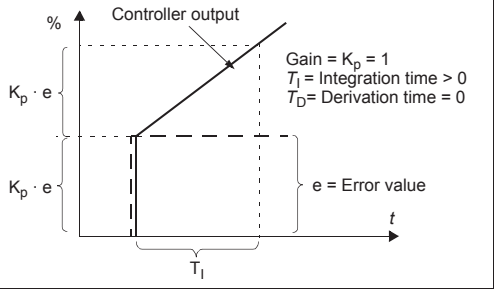
2303	**DERIVATION TIME** Sets the derivation time for the speed controller. • Derivative action makes the control more responsive to error value changes. • The longer the derivation time, the more the speed controller output is boosted during the change. • If the derivation time is set to zero, the controller works as a PI controller, otherwise as a PID controller. The figure below shows the speed controller output after an error step when the error remains constant. 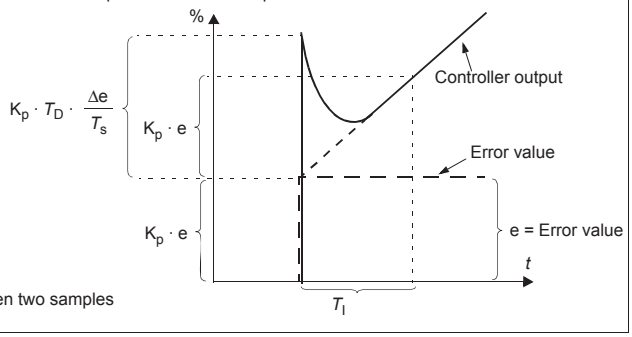 Gain = K_p = 1 T_I = Integration time > 0 T_D= Derivation time > 0 T_s= Sample time period = 2 ms Δe = Error value change between two samples

Code	Description
2304	**ACC COMPENSATION** Sets the derivation time for acceleration compensation. • Adding a derivative of the reference to the output of the speed controller compensates for inertia during acceleration. • 2303 DERIVATION TIME describes the principle of derivative action. • Rule of thumb: Set this parameter between 50 and 100% of the sum of the mechanical time constants for the motor and the driven machine. • The figure shows the speed responses when a high inertia load is accelerated along a ramp. * **No acceleration compensation** **Acceleration compensation** 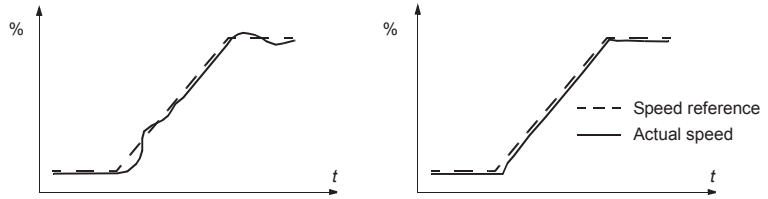 ***Note:** You can use parameter 2305 AUTOTUNE RUN to automatically set acceleration compensation.
2305	**AUTOTUNE RUN** Starts automatic tuning of the speed controller. 0 = OFF – Disables the Autotune creation process. (Does not disable the operation of Autotune settings.) 1 = ON – Activates speed controller autotuning. Automatically reverts to OFF. Procedure: **Note:** The motor load must be connected. • Run the motor at a constant speed of 20 to 40% of the rated speed. • Change the autotuning parameter 2305 to ON. The drive: • Accelerates the motor. • Calculates values for proportional gain, integration time and acceleration compensation. • Changes parameters 2301, 2302 and 2304 to these values. • Resets 2305 to OFF.

Group 24: TORQUE CONTROL

This group defines variables used for torque control operation.

Code	Description
2401	**TORQ RAMP UP** Defines the torque reference ramp up time – The minimum time for the reference to increase from zero to the nominal motor torque.
2402	**TORQ RAMP DOWN** Defines the torque reference ramp down time – The minimum time for the reference to decrease from the nominal motor torque to zero.

Group 25: CRITICAL SPEEDS

This group defines up to three critical speeds or ranges of speeds that are to be avoided due, for example, to mechanical resonance problems at certain speeds.

Code	Description
2501	**CRIT SPEED SEL** Sets the critical speeds function on or off. The critical speed function avoids specific speed ranges. 0 = OFF – Disables the critical speeds function. 1 = ON – Enables the critical speeds function. **Example**: To avoid speeds at which a fan system vibrates badly: • Determine problem speed ranges. Assume they are found to be: 18…23 Hz and 46…52 Hz. • Set 2501 CRIT SPEED SEL = 1. • Set 2502 CRIT SPEED 1 LO = 18 Hz. • Set 2503 CRIT SPEED 1 HI = 23 Hz. • Set 2504 CRIT SPEED 2 LO = 46 Hz. • Set 2505 CRIT SPEED 2 HI = 52 Hz. 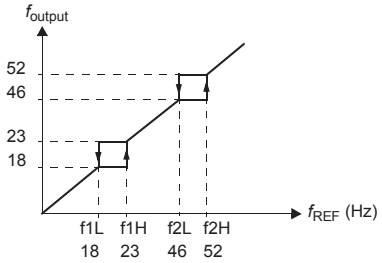
2502	**CRIT SPEED 1 LO** Sets the minimum limit for critical speed range 1. • The value must be less than or equal to 2503 CRIT SPEED 1 HI. • Units are rpm, unless 9904 MOTOR CTRL MODE = 3 (SCALAR:FREQ), then units are Hz.
2503	**CRIT SPEED 1 HI** Sets the maximum limit for critical speed range 1. • The value must be greater than or equal to 2502 CRIT SPEED 1 LO. • Units are rpm, unless 9904 MOTOR CTRL MODE = 3 (SCALAR:FREQ), then units are Hz.
2504	**CRIT SPEED 2 LO** Sets the minimum limit for critical speed range 2. • See parameter 2502.
2505	**CRIT SPEED 2 HI** Sets the maximum limit for critical speed range 2. • See parameter 2503.
2506	**CRIT SPEED 3 LO** Sets the minimum limit for critical speed range 3. • See parameter 2502.
2507	**CRIT SPEED 3 HI** Sets the maximum limit for critical speed range 3. • See parameter 2503.

Group 26: MOTOR CONTROL

This group defines variables used for motor control.

<table>
<tr><th>Code</th><th>Description</th></tr>
<tr><td>2601</td><td colspan="2">FLUX OPT ENABLE
Changes the magnitude of the flux depending on the actual load. Flux Optimization can reduce the total energy consumption and noise, and it should be enabled for drives that usually operate below nominal load.
0 = OFF – Disables the feature.
1 = ON – Enables the feature.</td></tr>
<tr><td>2602</td><td>FLUX BRAKING
Provides faster deceleration by raising the level of magnetization in the motor when needed, instead of limiting the deceleration ramp. By increasing the flux in the motor, the energy of the mechanical system is changed to thermal energy in the motor.
• Requires parameter 9904 MOTOR CTRL MODE = 1 (VECTOR:SPEED) OR 2 (VECTOR:TORQ).
0 = OFF – Disables the feature.
1 = ON – Enables the feature.</td><td> 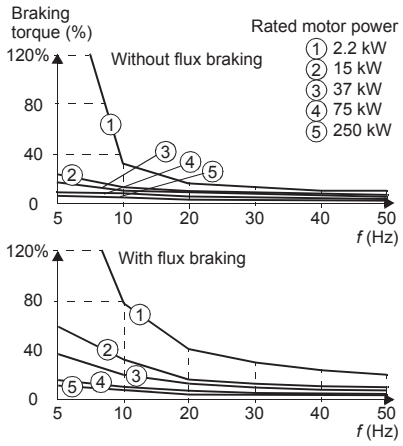
</td></tr>
<tr><td>2603</td><td>IR COMP VOLT
Sets the IR compensation voltage used for 0 Hz.
• Requires parameter 9904 MOTOR CTRL MODE = 3 (SCALAR:FREQ).
• Keep IR compensation as low as possible to prevent overheating.
• Typical IR compensation values are:
<table><tr><th colspan="6">380…480 V drives</th></tr><tr><td>P_N (kW)</td><td>3</td><td>7.5</td><td>15</td><td>37</td><td>132</td></tr><tr><td>IR comp (V)</td><td>18</td><td>15</td><td>12</td><td>8</td><td>3</td></tr></table></td><td rowspan="2">IR compensation
• When enabled, IR compensation provides an extra voltage boost to the motor at low speeds. Use IR compensation, for example, in applications that require a high breakaway torque.
 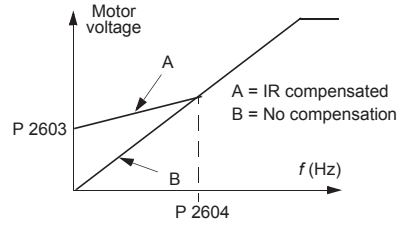
</td></tr>
<tr><td>2604</td><td>IR COMP FREQ
Sets the frequency at which IR compensation is 0 V (in % of motor frequency).</td></tr>
<tr><td>2605</td><td colspan="2">U/F RATIO
Selects the form for the U/f (voltage to frequency) ratio below field weakening point.
1 = LINEAR – Preferred for constant torque applications.
2 = SQUARED – Preferred for centrifugal pump and fan applications. (Square is more silent for most operating frequencies.)</td></tr>
</table>

Code	Description
2606	**SWITCHING FREQ** Sets the switching frequency for the drive. Also see parameter 2607 SWITCH FREQ CTRL and section *Switching frequency derating* on page *262*. • Higher switching frequencies mean less noise. • The 1, 4 and 8 kHz switching frequencies are available for all types, except for ACS550-01-246A-4 only 1 and 4 kHz are available. • The 12 kHz switching frequency is available only if parameter 9904 MOTOR CTRL MODE = 3 (SCALAR:FREQ). • The 12 kHz switching frequency is available for 200 V and 400 V frame sizes R1…R4 (except for the R4 types ACS550-01-087A-4 and ACS550-U1-097A-4) and for 600 V frame sizes R2…R4.
2607	**SWITCH FREQ CTRL** The switching frequency may be reduced if the ACS550 internal temperature rises above a limit. See the figure. This function allows the highest possible switching frequency to be used based on operating conditions. Higher switching frequency results in lower acoustic noise. 0 = OFF – The function is disabled. 1 = ON – The switching frequency is limited according to the figure. 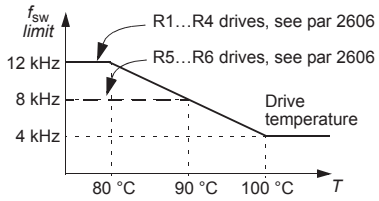
2608	**SLIP COMP RATIO** Sets gain for slip compensation (in %). • A squirrel-cage motor slips under load. Increasing the frequency as the motor torque increases compensates for the slip. • Requires parameter 9904 MOTOR CTRL MODE = 3 (SCALAR:FREQ). 0 – No slip compensation. 1…200 – Increasing slip compensation. 100% means full slip compensation.
2609	**NOISE SMOOTHING** This parameter introduces a random component to the switching frequency. Noise smoothing distributes the acoustic motor noise over a range of frequencies instead of a single tonal frequency resulting in lower peak noise intensity. The random component has an average of 0 Hz. It is added to the switching frequency set by parameter 2606 SWITCHING FREQ. This parameter has no effect if parameter 2606 = 12 kHz. 0 = DISABLE 1 = ENABLE.
2619	**DC STABILIZER** Enables or disables the DC voltage stabilizer. The DC stabilizer is used in scalar control mode to prevent possible voltage oscillations in the drive DC bus caused by motor load or weak supply network. In case of voltage variation the drive tunes the frequency reference to stabilize the DC bus voltage and therefore the load torque oscillation. 0 = DISABLE – Disables DC stabilizer. 1 = ENABLE – Enables DC stabilizer.

Group 29: MAINTENANCE TRIG

This group contains usage levels and trigger points. When usage reaches the set trigger point, a notice displayed on the control panel signals that maintenance is due.

Code	Description
2901	**COOLING FAN TRIG** Sets the trigger point for the drive's cooling fan counter. • Value is compared to parameter 2902 value. 0.0 – Disables the trigger.
2902	**COOLING FAN ACT** Defines the actual value of the drive's cooling fan counter. • When parameter 2901 has been set to a non-zero value, the counter starts. • When the actual value of the counter exceeds the value defined by parameter 2901, a maintenance notice is displayed on the panel. 0.0 – Resets the parameter.
2903	**REVOLUTION TRIG** Sets the trigger point for the motor's accumulated revolutions counter. • Value is compared to parameter 2904 value. 0 – Disables the trigger.
2904	**REVOLUTION ACT** Defines the actual value of the motor's accumulated revolutions counter. • When parameter 2903 has been set to a non-zero value, the counter starts. • When the actual value of the counter exceeds the value defined by parameter 2903, a maintenance notice is displayed on the panel. 0 – Resets the parameter.
2905	**RUN TIME TRIG** Sets the trigger point for the drive's run time counter. • Value is compared to parameter 2906 value. 0.0 – Disables the trigger.
2906	**RUN TIME ACT** Defines the actual value of the drive's run time counter. • When parameter 2905 has been set to a non-zero value, the counter starts. • When the actual value of the counter exceeds the value defined by parameter 2905, a maintenance notice is displayed on the panel. 0.0 – Resets the parameter.
2907	**USER MWh TRIG** Sets the trigger point for the drive's accumulated power consumption (in megawatt hours) counter. • Value is compared to parameter 2908 value. 0.0 – Disables the trigger.
2908	**USER MWh ACT** Defines the actual value of the drive's accumulated power consumption (in megawatt hours) counter. • When parameter 2907 has been set to a non-zero value, the counter starts. • When the actual value of the counter exceeds the value defined by parameter 2907, a maintenance notice is displayed on the panel. 0.0 – Resets the parameter.

Group 30: FAULT FUNCTIONS

This group defines situations that the drive should recognize as potential faults and defines how the drive should respond if the fault is detected.

Code	Description
3001	**AI<MIN FUNCTION** Defines the drive response if the analog input (AI) signal drops below the fault limits and AI is used in reference chain. • 3021 AI1 FAULT LIMIT and 3022 AI2 FAULT LIMIT set the fault limits 0 = NOT SEL – No response. 1 = FAULT – Displays a fault (7, AI1 LOSS or 8, AI2 LOSS) and the drive coasts to stop. 2 = CONST SP 7 – Displays an alarm (2006, AI1 LOSS or 2007, AI2 LOSS) and sets speed using 1208 CONST SPEED 7. 3 = LAST SPEED – Displays an alarm (2006, AI1 LOSS or 2007, AI2 LOSS) and sets speed using the last operating level. This value is the average speed over the last 10 seconds. ⚠ **WARNING!** If you select CONST SP 7 or LAST SPEED, make sure that continued operation is safe when the analog input signal is lost.
3002	**PANEL COMM ERR** Defines the drive response to a control panel communication error. 1 = FAULT – Displays a fault (10, PANEL LOSS) and the drive coasts to stop. 2 = CONST SP 7 – Displays an alarm (2008, PANEL LOSS) and sets speed using 1208 CONST SPEED 7. 3 = LAST SPEED – Displays an alarm (2008, PANEL LOSS) and sets speed using the last operating level. This value is the average speed over the last 10 seconds. ⚠ **WARNING!** If you select CONST SP 7 or LAST SPEED, make sure that continued operation is safe when the control panel communication is lost.
3003	**EXTERNAL FAULT 1** Defines the External Fault 1 signal input and the drive response to an external fault. 0 = NOT SEL – External fault signal is not used. 1 = DI1 – Defines digital input DI1 as the external fault input. • Activating the digital input indicates a fault. The drive displays a fault (14, EXT FAULT 1) and the drive coasts to stop. 2…6 = DI2…DI6 – Defines digital input DI2…DI6 as the external fault input. • See DI1 above. -1 = DI1(INV) – Defines an inverted digital input DI1 as the external fault input. • De-activating the digital input indicates a fault. The drive displays a fault (14, EXT FAULT 1) and the drive coasts to stop. -2…-6 = DI2(INV)…DI6(INV) – Defines an inverted digital input DI2…DI6 as the external fault input. • See DI1(INV) above.
3004	**EXTERNAL FAULT 2** Defines the External Fault 2 signal input and the drive response to an external fault. • See parameter 3003 above.
3005	**MOT THERM PROT** Defines the drive response to motor overheating. 0 = NOT SEL – No response and/or motor thermal protection not set up. 1 = FAULT – When the calculated motor temperature exceeds 90 °C, displays an alarm (2010, MOTOR TEMP). When the calculated motor temperature exceeds 110 °C, displays a fault (9, MOT OVERTEMP) and the drive coasts to stop. 2 = ALARM – When the calculated motor temperature exceeds 90 °C, displays an alarm (2010, MOTOR TEMP).
3006	**MOT THERM TIME** Sets the motor thermal time constant for the motor temperature model. • This is the time required for the motor to reach 63% of the final temperature with steady load. • For thermal protection according to UL requirements for NEMA class motors, use the rule of thumb: MOTOR THERM TIME equals 35 times t6, where t6 (in seconds) is specified by the motor manufacturer as the time that the motor can safely operate at six times its rated current. • The thermal time for a Class 10 trip curve is 350 s, for a Class 20 trip curve 700 s, and for a Class 30 trip curve 1050 s. 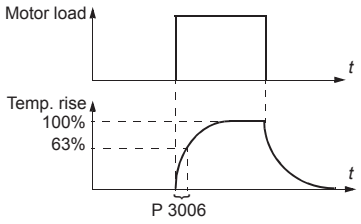

Code	Description
3007	**MOT LOAD CURVE** Sets the maximum allowable operating load of the motor. • When set to 100%, the maximum allowable load is equal to the value of parameter 9906 MOTOR NOM CURR. • Adjust the load curve level if the ambient temperature differs from nominal.
3008	**ZERO SPEED LOAD** Sets the maximum allowable current at zero speed. • Value is relative to 9906 MOTOR NOM CURR.
3009	**BREAK POINT FREQ** Sets the break point frequency for the motor load curve.

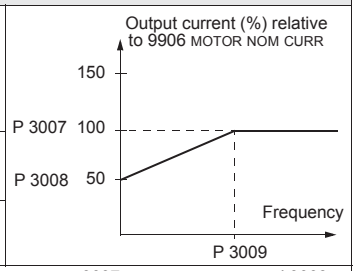

Example: Thermal protection trip times when parameters 3006 MOT THERM TIME, 3007 MOT LOAD CURVE and 3008 ZERO SPEED LOAD have default values.

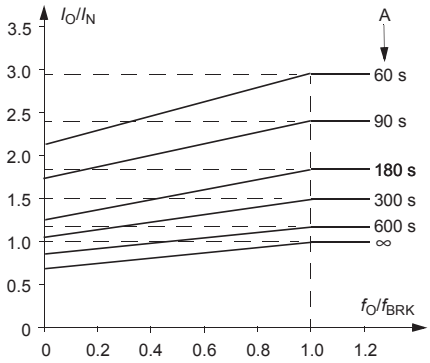

I_O = Output current
I_N = Nominal motor current
f_O = Output frequency
f_{BRK} = Break point frequency
A = Trip time

Code	Description
3010	**STALL FUNCTION** This parameter defines the operation of the Stall function. This protection is active if the drive operates in the stall region (see the figure) for the time defined by 3012 STALL TIME. The "User Limit" is defined in *Group 20: LIMITS* by 2017 MAX TORQUE 1, 2018 MAX TORQUE 2, or the limit on the COMM input. 0 = NOT SEL – Stall protection is not used. 1 = FAULT – When the drive operates in the stall region for the time set by 3012 STALL TIME: • The drive coasts to stop. • A fault indication is displayed. 2 = ALARM – When the drive operates in the stall region for the time set by 3012 STALL TIME: • An alarm indication is displayed. • The alarm disappears when the drive is out of the stall region for half the time set by parameter 3012 STALL TIME.
3011	**STALL FREQUENCY** This parameter sets the frequency value for the Stall function. Refer to the figure.
3012	**STALL TIME** This parameter sets the time value for the Stall function.

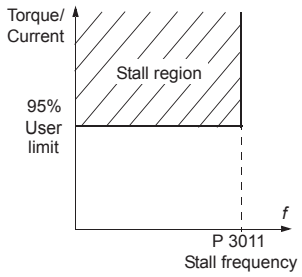

Code	Description
3017	**EARTH FAULT** Defines the drive response if the drive detects a ground fault in the motor or motor cables. The drive monitors for ground faults while the drive is running, and while the drive is not running. Also see parameter 3023 WIRING FAULT. 0 = DISABLE – No drive response to ground faults. 1 = ENABLE – Ground faults display fault 16 (EARTH FAULT), and (if running) the drive coasts to stop.

Code	Description
3018	**COMM FAULT FUNC** Defines the drive response if the fieldbus communication is lost. 0 = NOT SEL – No response. 1 = FAULT – Displays a fault (28, SERIAL 1 ERR) and the drive coasts to stop. 2 = CONST SP 7 – Displays an alarm (2005, I/O COMM) and sets speed using 1208 CONST SPEED 7. This "alarm speed" remains active until the fieldbus writes a new reference value. 3 = LAST SPEED – Displays an alarm (2005, I/O COMM) and sets speed using the last operating level. This value is the average speed over the last 10 seconds. This "alarm speed" remains active until the fieldbus writes a new reference value. ⚠ **WARNING!** If you select CONST SP 7, or LAST SPEED, make sure that continued operation is safe when fieldbus communication is lost.
3019	**COMM FAULT TIME** Sets the communication fault time used with 3018 COMM FAULT FUNC. • Brief interruptions in the fieldbus communication are not treated as faults if they are less than the COMM FAULT TIME value.
3021	**AI1 FAULT LIMIT** Sets a fault level for analog input 1. • See 3001 AI<MIN FUNCTION.
3022	**AI2 FAULT LIMIT** Sets a fault level for analog input 2. • See 3001 AI<MIN FUNCTION.
3023	**WIRING FAULT** Defines the drive response to cross wiring faults and to ground faults detected when the drive is NOT running. When the drive is not running it monitors for: • Improper connections of input power to the drive output (the drive can display fault 35, OUTPUT WIRING if improper connections are detected). • Ground faults (the drive can display fault 16, EARTH FAULT if a ground fault is detected). Also, see parameter 3017 EARTH FAULT. 0 = DISABLE – No drive response to either of the above monitoring results. 1 = ENABLE – The drive displays faults when this monitoring detects problems.
3024	**CB TEMP FAULT** Defines the drive response to control board overheating. Not for drives with an OMIO control board. 0 = DISABLE – No response. 1 = ENABLE – Displays fault 37 (CB OVERTEMP) and the drive coasts to stop.

Group 31: AUTOMATIC RESET

This group defines conditions for automatic resets. An automatic reset occurs after a particular fault is detected. The drive holds for a set delay time, then automatically restarts. You can limit the number of resets in a specified time period and set up automatic resets for a variety of faults.

<table>
<tr><th>Code</th><th>Description</th></tr>
<tr><td>3101</td><td>NUMBER OF TRIALS
Sets the number of allowed automatic resets within a trial period defined by 3102 TRIAL TIME.
• If the number of automatic resets exceeds this limit (within the trial time), the drive prevents additional automatic resets and remains stopped.
• Starting then requires a successful reset performed from the control panel or from a source selected by 1604 FAULT RESET SEL.</td><td rowspan="2">Example: Three faults have occurred in the trial time. The last is reset only if the value for 3101 NUMBER OF TRIALS is 3 or more.
 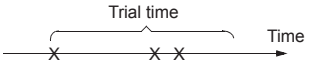

x = Automatic reset</td></tr>
<tr><td>3102</td><td>TRIAL TIME
Sets the time period used for counting and limiting the number of resets.
• See 3101 NUMBER OF TRIALS.</td></tr>
<tr><td>3103</td><td colspan="2">DELAY TIME
Sets the delay time between a fault detection and attempted drive restart.
• If DELAY TIME = zero, the drive resets immediately.</td></tr>
<tr><td>3104</td><td colspan="2">AR OVERCURRENT
Sets the automatic reset for the overcurrent function on or off.
0 = DISABLE – Disables automatic reset.
1 = ENABLE – Enables automatic reset.
• Automatically resets the fault (OVERCURRENT) after the delay set by 3103 DELAY TIME, and the drive resumes normal operation.</td></tr>
<tr><td>3105</td><td colspan="2">AR OVERVOLTAGE
Sets the automatic reset for the overvoltage function on or off.
0 = DISABLE – Disables automatic reset.
1 = ENABLE – Enables automatic reset.
• Automatically resets the fault (DC OVERVOLT) after the delay set by 3103 DELAY TIME, and the drive resumes normal operation.</td></tr>
<tr><td>3106</td><td colspan="2">AR UNDERVOLTAGE
Sets the automatic reset for the undervoltage function on or off.
0 = DISABLE – Disables automatic reset.
1 = ENABLE – Enables automatic reset.
• Automatically resets the fault (DC UNDERVOLT) after the delay set by 3103 DELAY TIME, and the drive resumes normal operation.</td></tr>
<tr><td>3107</td><td colspan="2">AR AI<MIN
Sets the automatic reset for the analog input less than minimum value function on or off.
0 = DISABLE – Disables automatic reset.
1 = ENABLE – Enables automatic reset.
• Automatically resets the fault (AI<MIN) after the delay set by 3103 DELAY TIME, and the drive resumes normal operation.
WARNING! When the analog input signal is restored, the drive may restart, even after a long stop. Make sure that automatic, long delayed starts will not cause physical injury and/or damage equipment.</td></tr>
<tr><td>3108</td><td colspan="2">AR EXTERNAL FLT
Sets the automatic reset for external faults function on or off.
0 = DISABLE – Disables automatic reset.
1 = ENABLE – Enables automatic reset.
• Automatically resets the fault (EXT FAULT 1 or EXT FAULT 2) after the delay set by 3103 DELAY TIME, and the drive resumes normal operation.</td></tr>
</table>

Group 32: SUPERVISION

This group defines supervision for up to three signals from *Group 01: OPERATING DATA*. Supervision monitors a specified parameter and energizes a relay output if the parameter passes a defined limit. Use *Group 14: RELAY OUTPUTS* to define the relay and whether the relay activates when the signal is too low or too high.

Code	Description
3201	**SUPERV 1 PARAM** Selects the first supervised parameter. • Must be a parameter number from *Group 01: OPERATING DATA*. • 100 = NOT SELECTED – No parameter selected. • 101…159 – Selects parameter 0101…0159. • If the supervised parameter passes a limit, a relay output is energized. • The supervision limits are defined in this group. • The relay outputs are defined in *Group 14: RELAY OUTPUTS* (definition also specifies which supervision limit is monitored). **LO ≤ HI** Operating data supervision using relay outputs, when LO≤HI. • Case A = Parameter 1401 RELAY OUTPUT 1 (or 1402 RELAY OUTPUT 2, etc.) value is SUPRV1 OVER or SUPRV2 OVER. Use for monitoring when/if the supervised signal exceeds a given limit. The relay remains active until the supervised value drops below the low limit. • Case B = Parameter 1401 RELAY OUTPUT 1 (or 1402 RELAY OUTPUT 2, etc.) value is SUPRV1 UNDER or SUPRV2 UNDER. Use for monitoring when/if the supervised signal falls below a given limit. The relay remains active until the supervised value rises above the high limit. **LO > HI** Operating data supervision using relay outputs, when LO>HI. The lowest limit (HI 3203) is active initially and remains active until the supervised parameter goes above the highest limit (LO 3202), making that limit the active limit. That limit remains active until the supervised parameter goes below the lowest limit (HI 3203), making that limit active. • Case A = Parameter 1401 RELAY OUTPUT 1 (or 1402 RELAY OUTPUT 2, etc.) value is SUPRV1 OVER or SUPRV2 OVER. Initially the relay is de-energized. It is energized whenever the supervised parameter goes above the active limit. • Case B = Parameter 1401 RELAY OUTPUT 1 (or 1402 RELAY OUTPUT 2, etc.) value is SUPRV1 UNDER or SUPRV2 UNDER. Initially the relay is energized. It is de-energized whenever the supervised parameter goes below the active limit. **LO ≤ HI** **Note:** Case LO ≤ HI represents a normal hysteresis. 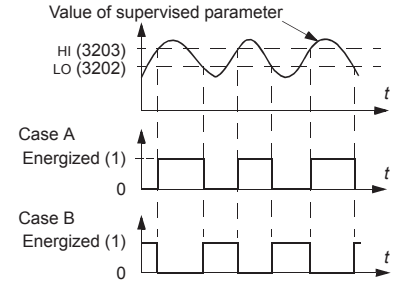 **LO > HI** **Note:** Case LO>HI represents a special hysteresis with two separate supervision limits. 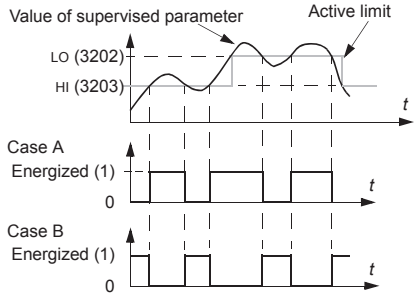
3202	**SUPERV 1 LIM LO** Sets the low limit for the first supervised parameter. See 3201 SUPERV 1 PARAM above.
3203	**SUPERV 1 LIM HI** Sets the high limit for the first supervised parameter. See 3201 SUPERV 1 PARAM above.
3204	**SUPERV 2 PARAM** Selects the second supervised parameter. See 3201 SUPERV 1 PARAM above.
3205	**SUPERV 2 LIM LO** Sets the low limit for the second supervised parameter. See 3204 SUPERV 2 PARAM above.
3206	**SUPERV 2 LIM HI** Sets the high limit for the second supervised parameter. See 3204 SUPERV 2 PARAM above.

Code	Description
3207	**SUPERV 3 PARAM** Selects the third supervised parameter. See 3201 SUPERV 1 PARAM above.
3208	**SUPERV 3 LIM LO** Sets the low limit for the third supervised parameter. See 3207 SUPERV 3 PARAM above.
3209	**SUPERV 3 LIM HI** Sets the high limit for the third supervised parameter. See 3207 SUPERV 3 PARAM above.

Group 33: INFORMATION

This group provides access to information about the drive's current programs: versions and test date.

Code	Description
3301	**FIRMWARE** Contains the version of the drive's firmware.
3302	**LOADING PACKAGE** Contains the version of the loading package.
3303	**TEST DATE** Contains the test date (yy.ww).
3304	**DRIVE RATING** Indicates the drive's current and voltage rating. The format is XXXY, where: • XXX = The nominal current rating of the drive in amperes. If present, an "A" indicates a decimal point in the rating for the current. For example XXX = 8A8 indicates a nominal current rating of 8.8 A. • Y = The voltage rating of the drive, where Y = : • 2 indicates a 208…240 V rating. • 4 indicates a 380…480 V rating. • 6 indicates a 500…600 V rating.
3305	**PARAMETER TABLE** Contains the version of the parameter table used in the drive.

Group 34: PANEL DISPLAY

This group defines the content for control panel display (middle area), when the control panel is in the Output mode.

Code	Description
3401	**SIGNAL1 PARAM** Selects the first parameter (by number) displayed on the control panel. • Definitions in this group define display content when the control panel is in the control mode. • Any parameter number in *Group 01: OPERATING DATA* can be selected. • Using the following parameters, the display value can be scaled, converted to convenient units and/or displayed as a bar graph. • The figure identifies selections made by parameters in this group. 100 = NOT SELECTED – First parameter not displayed. 101…159 – Displays parameter 0101…0159. If parameter does not exist, the display shows "n.a."
3402	**SIGNAL1 MIN** Defines the minimum expected value for the first display parameter. Use parameters 3402, 3403, 3406 and 3407, for example to convert a *Group 01: OPERATING DATA* parameter, such as 0102 SPEED (in rpm) to the speed of a conveyor driven by the motor (in ft/min). For such a conversion, the source values in the figure are the min. and max. motor speed, and the display values are the corresponding min. and max. conveyor speed. Use parameter 3405 to select the proper units for the display. **Note:** Selecting units does not convert values. Parameter is not effective if parameter 3404 OUTPUT1 DSP FORM = 9 (DIRECT).
3403	**SIGNAL1 MAX** Defines the maximum expected value for the first display parameter. **Note:** Parameter is not effective if parameter 3404 OUTPUT1 DSP FORM = 9 (DIRECT).
3404	**OUTPUT1 DSP FORM** Defines the decimal point location for the first display parameter. 0…7 – Defines the decimal point location. • Enter the number of digits desired to the right of the decimal point. • See the table for an example using pi (3.14159). 8 = BAR METER – Specifies a bar meter display. 9 = DIRECT – Decimal point location and units of measure are identical to the source signal. See *Group 01: OPERATING DATA* parameter listing in section *Complete parameter list* on page *85* for resolution (which indicates the decimal point location) and the units of measure.

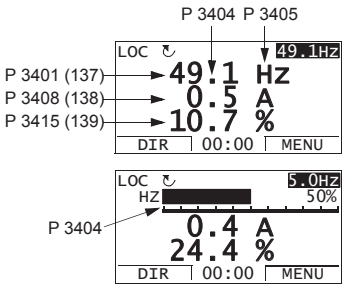

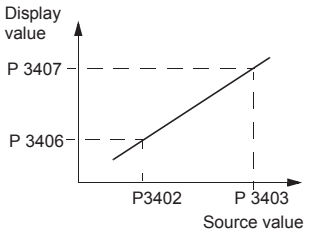

3404 value	Display	Range
0	± 3	-32768…+32767 (Signed)
1	± 3.1	
2	± 3.14	
3	± 3.142	
4	3	0…65535 (Unsigned)
5	3.1	
6	3.14	
7	3.142	
8	Bar meter displayed.	
9	Decimal point location and units as for the source signal.	

Code	Description
3405	**OUTPUT1 UNIT** Selects the units used with the first display parameter. **Note:** Parameter is not effective if parameter 3404 OUTPUT1 DSP FORM = 9 (DIRECT). 0 = NO UNIT, 9 = °C, 18 = MWh, 27 = ft, 36 = l/s, 45 = Pa, 54 = lb/m, 63 = Mrev 1 = A, 10 = lb ft, 19 = m/s, 28 = MGD, 37 = l/min, 46 = GPS, 55 = lb/h, 64 = d 2 = V, 11 = mA, 20 = m^3/h, 29 = inHg, 38 = l/h, 47 = gal/s, 56 = FPS, 65 = inWC 3 = Hz, 12 = mV, 21 = dm^3/s, 30 = FPM, 39 = m^3/s, 48 = gal/m, 57 = ft/s, 66 = m/min 4 = %, 13 = kW, 22 = bar, 31 = kb/s, 40 = m^3/m, 49 = gal/h, 58 = inH_2O, 67 = Nm 5 = s, 14 = W, 23 = kPa, 32 = kHz, 41 = kg/s, 50 = ft^3/s, 59 = in wg 6 = h, 15 = kWh, 24 = GPM, 33 = ohm, 42 = kg/m, 51 = ft^3/m, 60 = ft wg 7 = rpm, 16 = °F, 25 = PSI, 34 = ppm, 43 = kg/h, 52 = ft^3/h, 61 = lbsi 8 = kh, 17 = hp, 26 = CFM, 35 = pps, 44 = mbar, 53 = lb/s, 62 = ms The following units are useful for the bar display. 117 = %ref, 119 = %dev, 121 = % SP, 123 = Iout, 125 = Fout, 127 = Vdc 118 = %act, 120 = % LD, 122 = %FBK, 124 = Vout, 126 = Tout
3406	**OUTPUT1 MIN** Sets the minimum value displayed for the first display parameter. **Note:** Parameter is not effective if parameter 3404 OUTPUT1 DSP FORM = 9 (DIRECT).
3407	**OUTPUT1 MAX** Sets the maximum value displayed for the first display parameter. **Note:** Parameter is not effective if parameter 3404 OUTPUT1 DSP FORM = 9 (DIRECT).
3408	**SIGNAL2 PARAM** Selects the second parameter (by number) displayed on the control panel. See parameter 3401.
3409	**SIGNAL2 MIN** Defines the minimum expected value for the second display parameter. See parameter 3402.
3410	**SIGNAL2 MAX** Defines the maximum expected value for the second display parameter. See parameter 3403.
3411	**OUTPUT2 DSP FORM** Defines the decimal point location for the second display parameter. See parameter 3404.
3412	**OUTPUT2 UNIT** Selects the units used with the second display parameter. See parameter 3405.
3413	**OUTPUT2 MIN** Sets the minimum value displayed for the second display parameter. See parameter 3406.
3414	**OUTPUT2 MAX** Sets the maximum value displayed for the second display parameter. See parameter 3407.
3415	**SIGNAL3 PARAM** Selects the third parameter (by number) displayed on the control panel. See parameter 3401.
3416	**SIGNAL3 MIN** Defines the minimum expected value for the third display parameter. See parameter 3402.
3417	**SIGNAL3 MAX** Defines the maximum expected value for the third display parameter. See parameter 3403.
3418	**OUTPUT3 DSP FORM** Defines the decimal point location for the third display parameter. See parameter 3404.
3419	**OUTPUT3 UNIT** Selects the units used with the third display parameter. See parameter 3405.
3420	**OUTPUT3 MIN** Sets the minimum value displayed for the third display parameter. See parameter 3406.

Code	Description
3421	**OUTPUT3 MAX** Sets the maximum value displayed for the third display parameter. See parameter 3407.

Group 35: MOTOR TEMP MEAS

This group defines the detection and reporting for a particular potential fault – motor overheating, as detected by a temperature sensor. Typical connections are defined below.

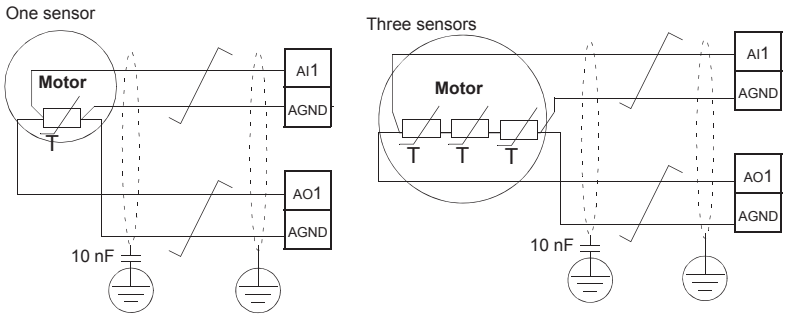

WARNING! IEC 60664 requires double or reinforced insulation between live parts and the surface of accessible parts of electrical equipment which are either non-conductive or conductive but not connected to the protective earth.

To fulfil this requirement, connect a thermistor (and other similar components) to the drive's control terminals using any of these alternatives:

- Separate the thermistor from live parts of the motor with double reinforced insulation.
- Protect all circuits connected to the drive's digital and analog inputs. Protect against contact, and insulate from other low voltage circuits with basic insulation (rated for the same voltage level as the drive's main circuit).
- Use an external thermistor relay. The relay insulation must be rated for the same voltage level as the drive's main circuit.

The figure below shows alternate thermistor connections. At the motor end the cable shield should be earthed through a 10 nF capacitor. If this is not possible, leave the shield unconnected.

Thermistor relay: THERM(0) or THERM(1)

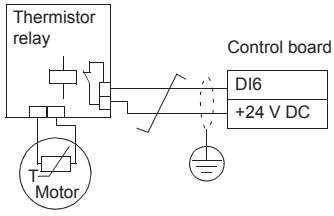

THERM(0)

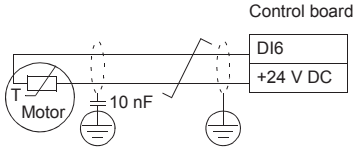

For other faults, or for anticipating motor overheating using a model, see *Group 30: FAULT FUNCTIONS*.

Code	Description
3501	**SENSOR TYPE** Identifies the type of motor temperature sensor used, PT100 (°C), PTC (ohm) or thermistor. See parameters 1501 AO1 CONTENT SEL and 1507 AO2 CONTENT SEL. 0 = NONE 1 = 1 x PT100 – Sensor configuration uses one PT 100 sensor. • Analog output AO1 or AO2 feeds constant current through the sensor. • The sensor resistance increases as the motor temperature rises, as does the voltage over the sensor. • The temperature measurement function reads the voltage through analog input AI1 or AI2 and converts it to degrees Celsius. 2 = 2 x PT100 – Sensor configuration uses two PT100 sensors. • Operation is the same as for above 1 x PT100. 3 = 3 x PT100 – Sensor configuration uses three PT100 sensors. • Operation is the same as for above 1 x PT100. 4 = PTC – Sensor configuration uses PTC. • The analog output feeds a constant current through the sensor. • The resistance of the sensor increases sharply as the motor temperature rises over the PTC reference temperature (T_{ref}), as does the voltage over the resistor. The temperature measurement function reads the voltage through analog input AI1 and converts it into ohms. • The figure shows typical PTC sensor resistance values as a function of the motor operating temperature. 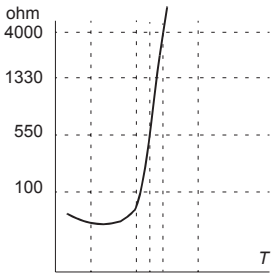 Temperature / Resistance: Normal < 3 kohm; Excessive > 28 kohm 5 = THERM(0) – Sensor configuration uses a thermistor. • Motor thermal protection is activated through a digital input. Connect either a PTC sensor or a normally closed thermistor relay to a digital input. The drive reads the digital input states as shown in the above table. • When the digital input is '0' the motor is overheated. • See the figures in the introduction to this group. 6 = THERM(1) – Sensor configuration uses a thermistor. • Motor thermal protection is activated through a digital input. Connect a normally open thermistor relay to a digital input. The drive reads the digital input states as shown in the table above. • When the digital input is '1' the motor is overheated. • See the figures in the introduction to this group.
3502	**INPUT SELECTION** Defines the input used for the temperature sensor. 1 = AI1 – PT100 and PTC. 2 = AI2 – PT100 and PTC. 3…8 = DI1…DI6 – Thermistor
3503	**ALARM LIMIT** Defines the alarm limit for motor temperature measurement. • At motor temperatures above this limit, the drive displays an alarm (2010, MOTOR TEMP) For thermistors: 0 – de-activated 1 – activated
3504	**FAULT LIMIT** Defines the fault limit for motor temperature measurement. • At motor temperatures above this limit, the drive displays a fault (9, MOT OVERTEMP) and stops the drive. For thermistors: 0 – de-activated 1 – activated

Group 36: TIMED FUNCTIONS

This group defines the timed functions. The timed functions include:

- four daily start and stop times
- four weekly start, stop and boost times
- four timers for collecting selected periods together.

A timer can be connected to multiple time periods and a time period can be in multiple timers.

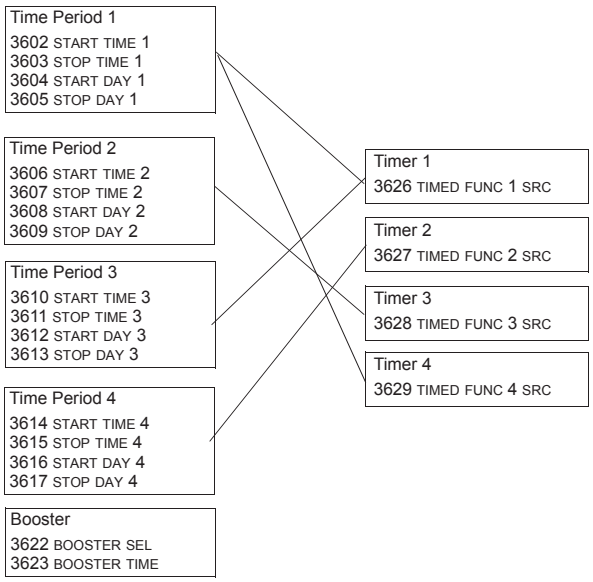

A parameter can be connected to only one timer.

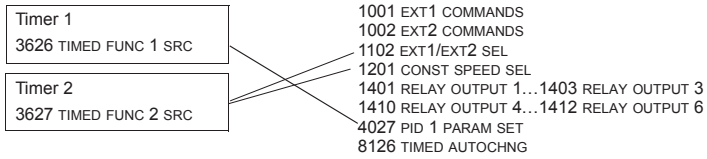

Code	Description
3601	**TIMERS ENABLE** Selects the source for the timer enable signal. 0 = NOT SEL – Timed functions are disabled. 1 = DI1 – Defines digital input DI1 as the timed function enable signal. • The digital input must be activated to enable the timed function. 2…6 = DI2…DI6 – Defines digital input DI2…DI6 as the timed function enable signal. 7 = ACTIVE – Timed functions are enabled. -1 = DI1(INV) – Defines an inverted digital input DI1 as the timed function enable signal. • This digital input must be de-activated to enable the timed function. • -2…-6 = DI2(INV)…DI6(INV) – Defines an inverted digital input DI2…DI6 as the timed function enable signal.
3602	**START TIME 1** Defines the daily start time. • The time can be changed in steps of 2 seconds. • If parameter value is 07:00:00, the timer is activated at 7 a.m. • The figure shows multiple timers on different weekdays. 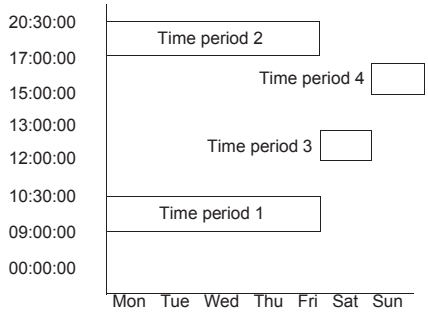
3603	**STOP TIME 1** Defines the daily stop time. • The time can be changed in steps of 2 seconds. • If the parameter value is 09:00:00, the timer is deactivated at 9 a.m.
3604	**START DAY 1** Defines the weekly start day. 1 = MONDAY…7 = SUNDAY • If parameter value is 1, timer 1 weekly is active from Monday midnight (00:00:00).
3605	**STOP DAY 1** Defines weekly stop day. 1 = MONDAY…7 = SUNDAY • If parameter value is 5, timer 1 weekly is deactivated on Friday midnight (23:59:58).
3606	**START TIME 2** Defines timer2 daily start time. • See parameter 3602.
3607	**STOP TIME 2** Defines timer 2 daily stop time. • See parameter 3603.
3608	**START DAY 2** Defines timer 2 weekly start day. • See parameter 3604.
3609	**STOP DAY 2** Defines timer 2 weekly stop day. • See parameter 3605.
3610	**START TIME 3** Defines timer 3 daily start time. • See parameter 3602.
3611	**STOP TIME 3** Defines timer 3 daily stop time. • See parameter 3603.

Code	Description
3612	**START DAY 3** Defines timer 3 weekly start day. • See parameter 3604.
3613	**STOP DAY 3** Defines timer 3 weekly stop day. • See parameter 3605.
3614	**START TIME 4** Defines timer 4 daily start time. • See parameter 3602.
3615	**STOP TIME 4** Defines timer 4 daily stop time. • See parameter 3603.
3616	**START DAY 4** Defines timer 4 weekly start day. • See parameter 3604.
3617	**STOP DAY 4** Defines timer 4 weekly stop day. • See parameter 3605.
3622	**BOOSTER SEL** Selects the source for the booster signal. 0 = NOT SEL – Booster signal is disabled. 1 = DI1 – Defines DI1 as the booster signal. 2…6 = DI2…DI6 – Defines DI2…DI6 as the booster signal. -1 = DI1(INV) – Defines an inverted digital input DI1 as the booster signal. -2…-6 = DI2(INV)…DI6(INV) – Defines an inverted digital input DI2…DI6 as the booster signal.
3623	**BOOSTER TIME** Defines the booster ON time. Time is started when booster sel signal is released. If parameter value is 01:30:00, booster is active for 1 hour and 30 minutes after activation DI is released. 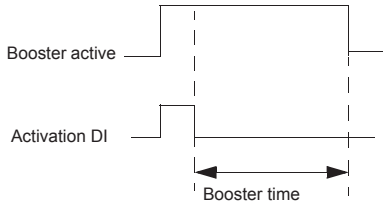
3626	**TIMED FUNC 1 SRC** Defines the time periods used by the timer. 0 = NOT SEL – No time periods have been selected. 1 = T1 – Time Period 1 selected in the timer. 2 = T2 – Time Period 2 selected in the timer. 3 = T1+T2 – Time Periods 1 and 2 selected in the timer. 4 = T3 – Time Period 3 selected in the timer. 5 = T1+T3 – Time Periods 1 and 3 selected in the timer. 6 = T2+T3 – Time Periods 2 and 3 selected in the timer. 7 = T1+T2+T3 – Time Periods 1, 2 and 3 selected in the timer. 8 = T4 – Time Period 4 selected in the timer. 9 = T1+T4 – Time Periods 1 and 4 selected in the timer. 10 = T2+T4 – Time Periods 2 and 4 selected in the timer. 11 = T1+T2+T4 – Time Periods 1, 2 and 4 selected in the timer. 12 = T3+T4 – Time Periods 3 and 4 selected in the timer. 13 = T1+T3+T4 – Time Periods 1, 3 and 4 selected in the timer. 14 = T2+T3+T4 – Time Periods 2, 3 and 4 selected in the timer. 15 = T1+T2+T3+T4 – Time Periods 1, 2, 3 and 4 selected in the timer. 16 = BOOSTER – Booster selected in the timer. 17 = T1+B – Booster and Time Period 1 selected in the timer. 18 = T2+B – Booster and Time Period 2 selected in the timer. 19 = T1+T2+B – Booster and Time Periods 1 and 2 selected in the timer. 20 = T3+B – Booster and Time Period 3 selected in the timer.

Code	Description
	21 = T1+T3+B – Booster and Time Periods 1 and 3 selected in the timer. 22 = T2+T3+B – Booster and Time Periods 2 and 3 selected in the timer. 23 = T1+T2+T3+B – Booster and Time Periods 1, 2 and 3 selected in the timer. 24 = T4+B – Booster and Time Period 4 selected in the timer. 25 = T1+T4+B – Booster and Time Periods 1 and 4 selected in the timer. 26 = T2+T4+B – Booster and Time Periods 2 and 4 selected in the timer. 27 = T1+T2+T4+B – Booster and Time Periods 1, 2 and 4 selected in the timer. 28 = T3+T4+B – Booster and Time Periods 3 and 4 selected in the timer. 29 = T1+T3+T4+B – Booster and Time Periods 1, 3 and 4 selected in the timer. 30 = T2+T3+T4+B – Booster and Time Periods 2, 3 and 4 selected in the timer. 31 = T1+2+3+4+B – Booster and Time Periods 1, 2, 3 and 4 selected in the timer.
3627	**TIMED FUNC 2 SRC** • See parameter 3626.
3628	**TIMED FUNC 3 SRC** • See parameter 3626.
3629	**TIMED FUNC 4 SRC** • See parameter 3626.

Group 37: USER LOAD CURVE

This group defines supervision of user adjustable load curves (motor torque as a function of frequency). The curve is defined by five points.

Code	Description
3701	**USER LOAD C MODE** Supervision mode for the user adjustable load curves. This functionality replaces the former underload supervision in *Group 30: FAULT FUNCTIONS*. To emulate it, see section *Correspondence with the obsolete underload supervision* on page *157*. 0 = NOT SEL – Supervision is not active. 1 = UNDERLOAD – Supervision for the torque dropping below the underload curve. 2 = OVERLOAD – Supervision for the torque exceeding the overload curve. 3 = BOTH – Supervision for the torque dropping below the underload curve or exceeding the overload curve. 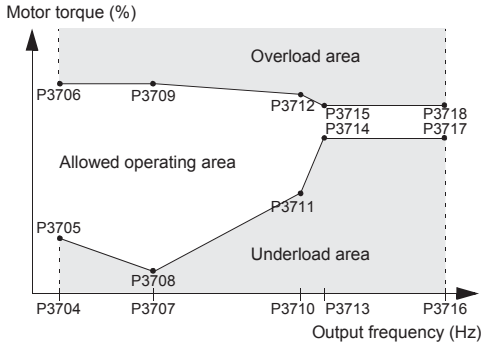
3702	**USER LOAD C FUNC** Action wanted during load supervision. 1 = FAULT – A fault is generated when the condition defined by 3701 USER LOAD C MODE has been valid longer than the time set by 3703 USER LOAD C TIME. 2 = ALARM – An alarm is generated when the condition defined by 3701 USER LOAD C MODE has been valid longer than half of the time defined by 3703 USER LOAD C TIME.
3703	**USER LOAD C TIME** Defines the time limit for generating a fault. • Half of this time is used as the limit for generating an alarm.
3704	**LOAD FREQ 1** Defines the frequency value of the first load curve definition point. • Must be smaller than 3707 LOAD FREQ 2.
3705	**LOAD TORQ LOW 1** Defines the torque value of the first underload curve definition point. • Must be smaller than 3706 LOAD TORQ HIGH 1.
3706	**LOAD TORQ HIGH 1** Defines the torque value of the first overload curve definition point.
3707	**LOAD FREQ 2** Defines the frequency value of the second load curve definition point. • Must be smaller than 3710 LOAD FREQ 3.
3708	**LOAD TORQ LOW 2** Defines the torque value of the second underload curve definition point. • Must be smaller than 3709 LOAD TORQ HIGH 2.
3709	**LOAD TORQ HIGH 2** Defines the torque value of the second overload curve definition point.
3710	**LOAD FREQ 3** Defines the frequency value of the third load curve definition point. • Must be smaller than 3713 LOAD FREQ 4.
3711	**LOAD TORQ LOW 3** Defines the torque value of the third underload curve definition point. • Must be smaller than 3712 LOAD TORQ HIGH 3.
3712	**LOAD TORQ HIGH 3** Defines the torque value of the third overload curve definition point.

Code	Description
3713	**LOAD FREQ 4** Defines the frequency value of the fourth load curve definition point. • Must be smaller than 3716 LOAD FREQ 5
3714	**LOAD TORQ LOW 4** Defines the torque value of the fourth underload curve definition point. • Must be smaller than 3715 LOAD TORQ HIGH 4.
3715	**LOAD TORQ HIGH 4** Defines the torque value of the fourth overload curve definition point.
3716	**LOAD FREQ 5** Defines the frequency value of fifth load curve definition point.
3717	**LOAD TORQ LOW 5** Defines the torque value of the fifth underload curve definition point. • Must be smaller than 3718 LOAD TORQ HIGH 5.
3718	**LOAD TORQ HIGH 5** Defines the torque value of the fifth overload curve definition point.

Correspondence with the obsolete underload supervision

The now obsolete parameter 3015 UNDERLOAD CURVE provided five selectable curves shown in the figure. The parameter characteristics were as described below.

- If the load drops below the set curve for longer than the time set by parameter 3014 UNDERLOAD TIME (obsolete), the underload protection is activated.
- Curves 1…3 reach maximum at the motor rated frequency set by parameter 9907 MOTOR NOM FREQ.
- T_M = nominal torque of the motor.
- f_N = nominal frequency of the motor.

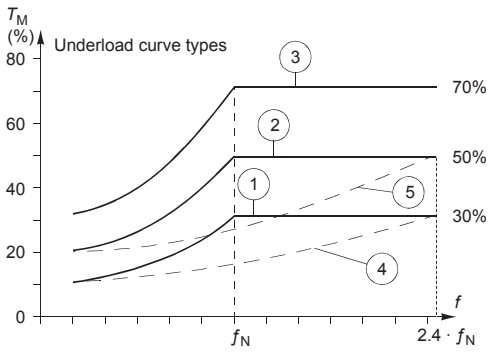

If you want to emulate the behavior of an old underload curve with parameters as in the shaded columns, set the new parameters as in the white columns in the two tables below:

Underload supervision with parameters 3013…3015 (obsolete)	Obsolete parameters		New parameters		
	3013 UNDERLOAD FUNCTION	3014 UNDERLOAD TIME	3701 USER LOAD C MODE	3702 USER LOAD C FUNC	3703 USER LOAD C TIME
No underload functionality	0	-	0	-	-
Underload curve, fault generated	1	t	1	1	t
Underload curve, alarm generated	2	t	1	2	2 · t

Obs. par.	New parameters														
3015 UNDER LOAD CURVE	3704 LOAD FREQ 1 (Hz)		3705 LOAD TORQ LOW 1 (%)	3707 LOAD FREQ 2 (Hz)		3708 LOAD TORQ LOW 2 (%)	3710 LOAD FREQ 3 (Hz)		3711 LOAD TORQ LOW 3 (%)	3713 LOAD FREQ 4 (Hz)		3714 LOAD TORQ LOW 4 (%)	3716 LOAD FREQ 5 (Hz)		3717 LOAD TORQ LOW 5 (%)
	EU	US		EU	US		EU	US		EU	US		EU	US	
1	5	6	10	32	38	17	41	50	23	50	60	30	500	500	30
2	5	6	20	31	37	30	42	50	40	50	60	50	500	500	50
3	5	6	30	31	37	43	42	50	57	50	60	70	500	500	70
4	5	6	10	73	88	17	98	117	23	120	144	30	500	500	30
5	5	6	20	71	86	30	99	119	40	120	144	50	500	500	50

Group 40: PROCESS PID SET 1

This group defines a set of parameters used with the Process PID (PID1) controller.

Typically only parameters in this group are needed.

PID controller – Basic set-up

In PID control mode, the drive compares a reference signal (setpoint) to an actual signal (feedback) and automatically adjusts the speed of the drive to match the two signals. The difference between the two signals is the error value.

Typically PID control mode is used, when the speed of a motor needs to be controlled based on pressure, flow or temperature. In most cases – when there is only 1 transducer signal wired to the ACS550 – only parameter group 40 is needed.

The following is a schematic of setpoint/feedback signal flow using parameter group 40.

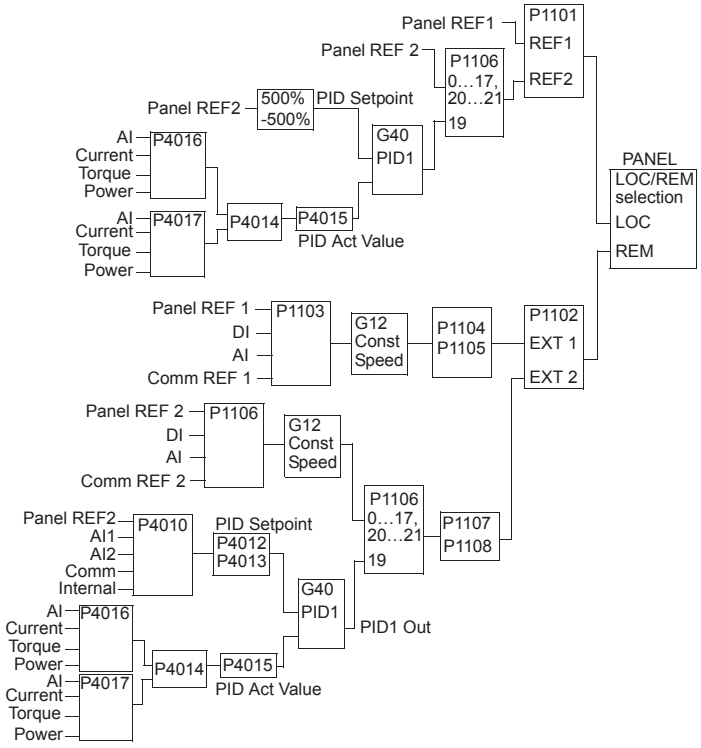

Note: In order to activate and use the PID controller, parameter 1106 must be set to value 19.

PID controller – Advanced

The ACS550 has two separate PID controllers:

- Process PID (PID1) and
- External PID (PID2)

Process PID (PID1) has 2 separate sets of parameters:

- Process PID (PID1) SET1, defined in *Group 40: PROCESS PID SET 1* and
- Process PID (PID1) SET2, defined in *Group 41: PROCESS PID SET 2*

You can select between the two different sets by using parameter 4027.

Typically two different PID controller sets are used when the load of the motor changes considerably from one situation to another.

You can use External PID (PID2), defined in *Group 42: EXT / TRIM PID*, in two different ways:

- Instead of using additional PID controller hardware, you can set outputs of the ACS550 to control a field instrument like a damper or a valve. In this case, set parameter 4230 to value 0. (0 is the default value.)
- You can use External PID (PID2) to trim or fine-tune the speed of the ACS550.

Code	Description
4001	**GAIN** Defines the PID controller's gain. • The setting range is 0.1… 100. • At 0.1, the PID controller output changes one-tenth as much as the error value. • At 100, the PID controller output changes one hundred times as much as the error value. Use the proportional gain and integration time values to adjust the responsiveness of the system. • A low value for proportional gain and a high value for integral time ensures stable operation, but provides sluggish response. If the proportional gain value is too large or the integral time too short, the system can become unstable. Procedure: • Initially, set: • 4001 GAIN = 0.1. • 4002 INTEGRATION TIME = 20 seconds. • Start the system and see if it reaches the setpoint quickly while maintaining stable operation. If not, increase GAIN (4001) until the actual signal (or drive speed) oscillates constantly. It may be necessary to start and stop the drive to induce this oscillation. • Reduce GAIN (4001) until the oscillation stops. • Set GAIN (4001) to 0.4 to 0.6 times the above value. • Decrease the INTEGRATION TIME (4002) until the feedback signal (or drive speed) oscillates constantly. It may be necessary to start and stop the drive to induce this oscillation. • Increase INTEGRATION TIME (4002) until the oscillation stops. • Set INTEGRATION TIME (4002) to 1.15 to 1.5 times the above value. • If the feedback signal contains high frequency noise, increase the value of parameter 1303 FILTER AI1 or 1306 FILTER AI2 until the noise is filtered from the signal.

Code	Description
4002	**INTEGRATION TIME** Defines the PID controller's integration time. Integration time is, by definition, the time required to increase the output by the error value: • Error value is constant and 100%. • Gain = 1. • Integration time of 1 second denotes that a 100% change is achieved in 1 second. 0.0 = NOT SEL – Disables integration (I-part of controller). 0.1…3600.0 – Integration time (seconds). • See 4001 for adjustment procedure. 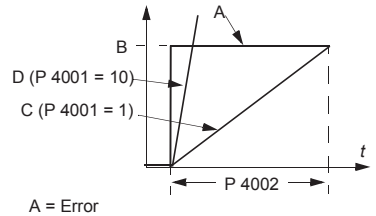 A = Error B = Error value step C = Controller output with Gain = 1 D = Controller output with Gain = 10
4003	**DERIVATION TIME** Defines the PID controller's derivation time. • You can add the derivative of the error to the PID controller output. The derivative is the error value's rate of change. For example, if the process error value changes linearly, the derivative is a constant added to the PID controller output. • The error-derivative is filtered with a 1-pole filter. The time constant of the filter is defined by parameter 4004 PID DERIV FILTER. 0.0…10.0 – Derivation time (seconds). 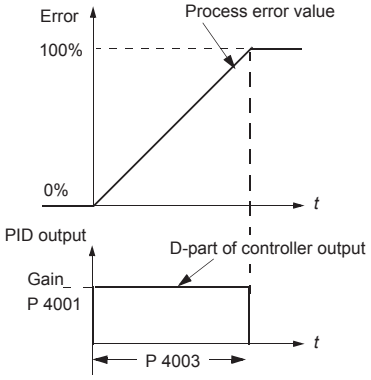
4004	**PID DERIV FILTER** Defines the filter time constant for the error-derivative part of the PID controller output. • Before being added to the PID controller output, the error-derivative is filtered with a 1-pole filter. • Increasing the filter time smooths the error-derivative, reducing noise. 0.0…10.0 – Filter time constant (seconds).
4005	**ERROR VALUE INV** Selects either a normal or inverted relationship between the feedback signal and the drive speed. 0 = NO – Normal, a decrease in feedback signal increases drive speed. Error = Ref - Fbk 1 = YES – Inverted, a decrease in feedback signal decreases drive speed. Error = Fbk - Ref
4006	**UNITS** Selects the unit for the PID controller actual values. (PID1 parameters 0128, 0130 and 0132). • See parameter 3405 for list of available units.
4007	**UNIT SCALE** Defines the decimal point location in PID controller actual values. • Enter the decimal point location counting in from the right of the entry. • See the table for example using pi (3.14159).

4007 value	Entry	Display
0	0003	3
1	0031	3.1
2	0314	3.14
3	3142	3.142

Code	Description
4008	**0% VALUE** Defines (together with the next parameter) the scaling applied to the PID controller's actual values (PID1 parameters 0128, 0130 and 0132). • Units and scale are defined by parameters 4006 and 4007.
4009	**100% VALUE** Defines (together with the previous parameter) the scaling applied to the PID controller's actual values. • Units and scale are defined by parameters 4006 and 4007.

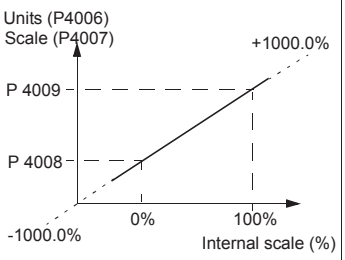

Code	Description
4010	**SET POINT SEL** Defines the reference signal source for the PID controller. • Parameter has no significance when the PID regulator is by-passed (see 8121 REG BYPASS CTRL). 0 = KEYPAD – Control panel provides reference. 1 = AI1 – Analog input 1 provides reference. 2 = AI2 – Analog input 2 provides reference. 8 = COMM – Fieldbus provides reference. 9 = COMM+AI1 – Defines a fieldbus and analog input 1 (AI1) combination as the reference source. See Analog input reference correction below. 10 = COMM*AI1 – Defines a fieldbus and analog input 1 (AI1) combination as the reference source. See Analog input reference correction below. 11 = DI3U,4D(RNC) – Digital inputs, acting as a motor potentiometer control, provide reference. • DI3 increases the speed (the U stands for "up") • DI4 decreases the reference (the D stands for "down"). • Parameter 2205 ACCELER TIME 2 controls the reference signal's rate of change. • R = Stop command resets the reference to zero. • NC = Reference value is not copied. 12 = DI3U,4D(NC) – Same as DI3,4D(RNC) above, except: • Stop command does not reset reference to zero. At restart the motor ramps up, at the selected acceleration rate, to the stored reference. 13 = DI5U,6D(NC) – Same as DI3U,4D(NC) above, except: • Uses digital inputs DI5 and DI6. 14 = AI1+AI2 – Defines an analog input 1 (AI1) and analog input 2 (AI2) combination as the reference source. See Analog input reference correction below. 15 = AI1*AI2 – Defines an analog input 1 (AI1) and analog input 2 (AI2) combination as the reference source. See Analog input reference correction below. 16 = AI1-AI2 – Defines an analog input 1 (AI1) and analog input 2 (AI2) combination as the reference source. See Analog input reference correction below. 17 = AI1/AI2 – Defines an analog input 1 (AI1) and analog input 2 (AI2) combination as the reference source. See Analog input reference correction below. 19 = INTERNAL – A constant value set using parameter 4011 provides reference. 20 = PID2OUT – Defines PID controller 2 output (parameter 0127 PID 2 OUTPUT) as the reference source.

<table>
<tr><th>Code</th><th>Description</th></tr>
<tr><td></td><td>Analog input reference correction
Parameter values 9, 10 and 14…17 use the formula in the following table.
<table><tr><th>Value setting</th><th>Calculation of the AI reference</th></tr><tr><td>C + B</td><td>C value + (B value - 50% of reference value)</td></tr><tr><td>C * B</td><td>C value · (B value / 50% of reference value)</td></tr><tr><td>C - B</td><td>(C value + 50% of reference value) - B value</td></tr><tr><td>C / B</td><td>(C value · 50% of reference value) / B value</td></tr></table>Where:
• C = Main reference value (= COMM for values 9, 10 and = AI1 for values 14…17)
• B = Correcting reference (= AI1 for values 9, 10 and = AI2 for values 14…17).
Example:
The figure shows the reference source curves for value settings 9, 10 and 14…17, where:
• C = 25%.
• P 4012 SETPOINT MIN = 0.
• P 4013 SETPOINT MAX = 0.
• B varies along the horizontal axis.
 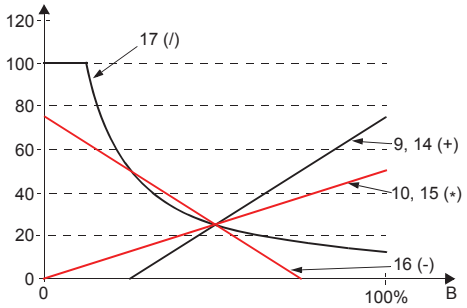
</td></tr>
<tr><td>4011</td><td>INTERNAL SETPNT
Sets a constant value used for the process reference.
• Units and scale are defined by parameters 4006 and 4007.</td></tr>
<tr><td>4012</td><td>SETPOINT MIN
Sets the minimum value for the reference signal source.
• See parameter 4010.</td></tr>
<tr><td>4013</td><td>SETPOINT MAX
Sets the maximum value for the reference signal source.
• See parameter 4010.</td></tr>
<tr><td>4014</td><td>FBK SEL
Defines the PID controller feedback (actual signal).
• You can define a combination of two actual values (ACT1 and ACT2) as the feedback signal.
• Use parameter 4016 to define the source for actual value 1 (ACT1).
• Use parameter 4017 to define the source for actual value 2 (ACT2).
1 = ACT1 – Actual value 1 (ACT1) provides the feedback signal.
2 = ACT1-ACT2 – ACT1 minus ACT2 provides the feedback signal.
3 = ACT1+ACT2 – ACT1 plus ACT2 provides the feedback signal.
4 = ACT1*ACT2 – ACT1 times ACT2 provides the feedback signal.
5 = ACT1/ACT2 – ACT1 divided by ACT2 provides the feedback signal.
6 = MIN(ACT1,2) – The smaller of ACT1 or ACT2 provides the feedback signal.
7 = MAX(ACT1,2) – The greater of ACT1 or ACT2 provides the feedback signal.
8 = sqrt(ACT1-2) – Square root of the value for ACT1 minus ACT2 provides the feedback signal.
9 = sqA1+sqA2 – Square root of ACT1 plus the square root of ACT2 provides the feedback signal.
10 = sqrt(ACT1) – Square root of ACT1 provides the feedback signal.
11 = COMM FBK 1 – Signal 0158 PID COMM VALUE 1 provides the feedback signal.
12 = COMM FBK 2 – Signal 0159 PID COMM VALUE 2 provides the feedback signal.
13 = AVE(ACT1,2) – The average of ACT1 and ACT2 provides the feedback signal.</td></tr>
<tr><td>4015</td><td>FBK MULTIPLIER
Defines an extra multiplier for the PID feedback value FBK defined by parameter 4014.
• Used mainly in applications where the flow is calculated from the pressure difference.
0.000 = NOT SEL – The parameter has no effect (1.000 used as the multiplier).
-32.768…32.767 – Multiplier applied to the signal defined by parameter 4014 FBK SEL.

Example: FBK = Multiplier $\times \sqrt{A1 - A2}$</td></tr>
</table>

4016 ACT1 INPUT

Defines the source for actual value 1 (ACT1). See also parameter 4018 ACT1 MINIMUM.
1 = AI1 – Uses analog input 1 for ACT1.
2 = AI2 – Uses analog input 2 for ACT1.
3 = CURRENT – Uses current for ACT1.
4 = TORQUE – Uses torque for ACT1.
5 = POWER – Uses power for ACT1.
6 = COMM ACT 1 – Uses value of signal 0158 PID COMM VALUE 1 for ACT1.
7 = COMM ACT 2 – Uses value of signal 0159 PID COMM VALUE 2 for ACT1.

4017 ACT2 INPUT

Defines the source for actual value 2 (ACT2). See also parameter 4020 ACT2 MINIMUM.
1 = AI1 – Uses analog input 1 for ACT2.
2 = AI2 – Uses analog input 2 for ACT2.
3 = CURRENT – Uses current for ACT2.
4 = TORQUE – Uses torque for ACT2.
5 = POWER – Uses power for ACT2.
6 = COMM ACT 1 – Uses value of signal 0158 PID COMM VALUE 1 for ACT2.
7 = COMM ACT 2 – Uses value of signal 0159 PID COMM VALUE 2 for ACT2.

4018 ACT1 MINIMUM

Sets the minimum value for ACT1.
- Scales the source signal used as the actual value ACT1 (defined by parameter 4016 ACT1 INPUT). For parameter 4016 values 6 (COMM ACT 1) and 7 (COMM ACT 2) scaling is not done.

Par 4016	Source	Source min.	Source max.
1	Analog input 1	1301 MINIMUM AI1	1302 MAXIMUM AI1
2	Analog input 2	1304 MINIMUM AI2	1305 MAXIMUM AI2
3	Current	0	2 · nominal current
4	Torque	-2 · nominal torque	2 · nominal torque
5	Power	-2 · nominal power	2 · nominal power

- See the figure: A= Normal; B = Inversion (ACT1 MINIMUM > ACT1 MAXIMUM)

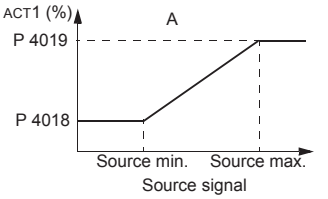

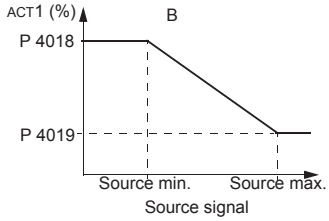

4019 ACT1 MAXIMUM

Sets the maximum value for ACT1.
- See 4018 ACT1 MINIMUM.

4020 ACT2 MINIMUM

Sets the minimum value for ACT2.
- See 4018 ACT1 MINIMUM.

4021 ACT2 MAXIMUM

Sets the maximum value for ACT2.
- See 4018 ACT1 MINIMUM.

4022 SLEEP SELECTION

Defines the control for the PID sleep function.
0 = NOT SEL– Disables the PID sleep control function.
1 = DI1 – Defines digital input DI1 as the control for the PID sleep function.
- Activating the digital input activates the sleep function.
- De-activating the digital input restores PID control.

2…6 = DI2…DI6 – Defines digital input DI2…DI6 as the control for the PID sleep function.
- See DI1 above.

7 = INTERNAL – Defines the output rpm/frequency, process reference and process actual value as the control for the PID sleep function. Refer to parameters 4025 WAKE-UP DEV and 4023 PID SLEEP LEVEL.
-1 = DI1(INV) – Defines an inverted digital input DI1 as the control for the PID sleep function.
- De-activating the digital input activates the sleep function.
- Activating the digital input restores PID control.

-2…-6 = DI2(INV)…DI6(INV) – Defines an inverted digital input DI2…DI6 as the control for the PID sleep function.
- See DI1(INV) above.

Code	Description	
4023	**PID SLEEP LEVEL** Sets the motor speed / frequency that enables the PID sleep function – a motor speed / frequency below this level, for at least the time period 4024 PID SLEEP DELAY enables the PID sleep function (stopping the drive). • Requires 4022 = 7 (INTERNAL). • See the figure: A = PID output level; B = PID process feedback.	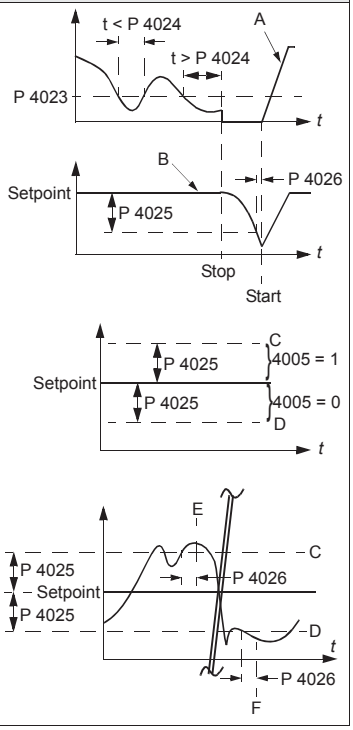
4024	**PID SLEEP DELAY** Sets the time delay for the PID sleep function – a motor speed / frequency below 4023 PID SLEEP LEVEL for at least this time period enables the PID sleep function (stopping the drive). • See 4023 PID SLEEP LEVEL above.	
4025	**WAKE-UP DEV** Defines the wake-up deviation – a deviation from the setpoint greater than this value, for at least the time period 4026 WAKE-UP DELAY, re-starts the PID controller. • Parameters 4006 and 4007 define the units and scale. • Parameter 4005 = 0, Wake-up level = Setpoint - Wake-up deviation. • Parameter 4005 = 1, Wake-up level = Setpoint + Wake-up deviation. • Wake-up level can be above or below setpoint. See the figures: • C = Wake-up level when parameter 4005 = 1 • D = Wake-up level when parameter 4005 = 0 • E = Feedback is above wake-up level and lasts longer than 4026 WAKE-UP DELAY – PID function wakes up. • F = Feedback is below wake-up level and lasts longer than 4026 WAKE-UP DELAY – PID function wakes up.	
4026	**WAKE-UP DELAY** Defines the wake-up delay – a deviation from the setpoint greater than 4025 WAKE-UP DEV, for at least this time period, re-starts the PID controller.	

Code	Description
4027	**PID 1 PARAM SET** Process PID (PID1) has two separate sets of parameters, PID set 1 and PID set 2. • PID set 1 uses parameters 4001…4026. • PID set 2 uses parameters 4101…4126. PID 1 PARAM SET defines which set is selected. 0 = SET 1 – PID Set 1 (parameters 4001…4026) is active. 1 = DI1 – Defines digital input DI1 as the control for PID Set selection. • Activating the digital input selects PID Set 2. • De-activating the digital input selects PID Set 1. 2…6 = DI2…DI6 – Defines digital input DI2…DI6 as the control for PID Set selection. • See DI1 above. 7 = SET 2 – PID Set 2 (parameters 4101…4126) is active. 8…11 = TIMED FUNC 1…4 – Defines the Timed function as the control for the PID Set selection (Timed function de-activated = PID Set 1; Timed function activated = PID Set 2) • See *Group 36: TIMED FUNCTIONS*. 12 = 2-ZONE MIN – The drive calculates the difference between setpoint 1 and feedback 1 as well as setpoint 2 and feedback 2. The drive will control the zone (and select the set) that has a larger difference. • A positive difference (a setpoint higher than the feedback) is always larger than a negative difference. This keeps feedback values at or above the setpoint. • Controller does not react to the situation of feedback above setpoint if another zone's feedback is closer to its setpoint. 13 = 2-ZONE MAX – The drive calculates the difference between setpoint 1 and feedback 1 as well as setpoint 2 and feedback 2. The drive will control the zone (and select the set) that has a smaller difference. • A negative difference (a setpoint lower than the feedback) is always smaller than a positive difference. This keeps feedback values at or below the setpoint. • Controller does not react to the situation of feedback below setpoint if another zone's feedback is closer to its setpoint. 14 = 2-ZONE AVE – The drive calculates the difference between setpoint 1 and feedback 1 as well as setpoint 2 and feedback 2. In addition, it calculates the average of the deviations and uses it to control zone 1. Therefore one feedback is kept above its setpoint and another is kept as much below its setpoint. -1 = DI1(INV) – Defines an inverted digital input DI1 as the control for PID Set selection. • Activating the digital input selects PID Set 1. • De-activating the digital input selects PID Set 2. -2…-6 = DI2(INV)…DI6(INV) – Defines an inverted digital input DI2…DI6 as the control for PID Set selection. • See DI1(INV) above.

Group 41: PROCESS PID SET 2

Parameters of this group belong to PID parameter set 2. The operation of parameters 4101…4126 is analogous with set 1 parameters 4001…4026.

PID parameter set 2 can be selected by parameter 4027 PID 1 PARAM SET.

Code	Description
4101 … 4126	See 4001 …4026

Group 42: EXT / TRIM PID

This group defines the parameters used for the second PID controller (PID2), which is used for the External / Trimming PID.

The operation of parameters 4201...4221 is analogous with Process PID set 1 (PID1) parameters 4001…4021.

Code	Description
4201 … 4221	See 4001 …4021
4228	**ACTIVATE** Defines the source for enabling the external PID function. • Requires 4230 TRIM MODE = 0 (NOT SEL). 0 = NOT SEL – Disables external PID control. 1 = DI1 – Defines digital input DI1 as the control for enabling external PID control. • Activating the digital input enables external PID control. • De-activating the digital input disables external PID control. 2…6 = DI2…DI6 – Defines digital input DI2…DI6 as the control for enabling external PID control. • See DI1 above. 7 = DRIVE RUN – Defines the start command as the control for enabling external PID control. • Activating the start command (drive is running) enables external PID control. 8 = ON – Defines the power-on as the control for enabling external PID control. • Activating power to the drive enables external PID control. 9…12 = TIMED FUNC 1…4 – Defines the Timed function as the control for enabling external PID control (Timed function active enables external PID control). • See *Group 36: TIMED FUNCTIONS*. -1 = DI1(INV) – Defines an inverted digital input DI1 as the control for enabling external PID control. • Activating the digital input disables external PID control. • De-activating the digital input enables external PID control. -2…-6 = DI2(INV)…DI6(INV) – Defines an inverted digital input DI2…DI6 as the control for enabling external PID control. • See DI1(INV) above.
4229	**OFFSET** Defines the offset for the PID output. • When PID is activated, output starts from this value. • When PID is deactivated, output resets to this value. • Parameter is active when 4230 TRIM MODE = 0 (trim mode is not active).
4230	**TRIM MODE** Selects the type of trim, if any. Using the trim it is possible to combine a corrective factor to the drive reference. 0 = NOT SEL – Disables the trim function. 1 = PROPORTIONAL – Adds a trim factor that is proportional to the rpm/Hz reference. 2 = DIRECT – Adds a trim factor based on the control loop's maximum limit.
4231	**TRIM SCALE** Defines the multiplier (as a percent, plus or minus) used in the trim mode.

Code	Description
4232	**CORRECTION SRC** Defines the trimming reference for the correction source. 1 = PID2REF – Uses appropriate REF MAX (SWITCH A OR B): • 1105 REF1 MAX when REF1 is active (A). • 1108 REF2 MAX when REF2 is active (B). 2 = PID2OUTPUT – Uses the absolute maximum speed or frequency (Switch C): • 2002 MAXIMUM SPEED if 9904 MOTOR CTRL MODE = 1 (VECTOR:SPEED) or 2 (VECTOR:TORQ). • 2008 MAXIMUM FREQ if 9904 MOTOR CTRL MODE = 3 (SCALAR:FREQ). 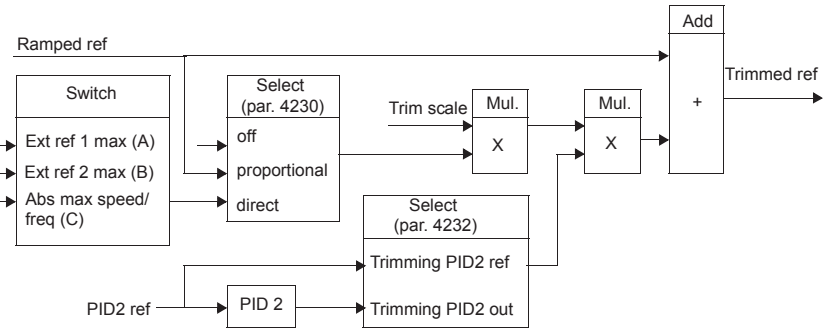

Group 50: ENCODER

This group defines the setup for encoder use:

- Sets the number of encoder pulses per shaft revolution.
- Enables the encoder operation.
- Defines how mechanical angle and revolution data is reset.

See also *User's Manual for Pulse Encoder Interface Module OTAC-01* [3AUA0000001938 (English)].

Code	Description
5001	**PULSE NR** Sets the number of pulses provided by an optional encoder for each full motor shaft revolution (ppr).
5002	**ENCODER ENABLE** Enables/disables an optional encoder. 0 = DISABLE – Drive uses speed feedback derived from the internal motor model (applies for any setting of parameter 9904 MOTOR CTRL MODE). 1 = ENABLE – Drive uses feedback from an optional encoder. This function requires the Pulse Encoder Interface Module (OTAC-01) and an encoder. Operation depends on the setting of parameter 9904 MOTOR CTRL MODE: • 9904 = 1 (VECTOR:SPEED): The encoder provides improved speed feedback and improved low speed torque accuracy. • 9904 = 2 (VECTOR:TORQ): The encoder provides improved speed feedback and improved low speed torque accuracy. • 9904 = 3 (SCALAR:SPEED): The encoder provides speed feedback. (This is not closed loop speed regulation. However, using parameter 2608 SLIP COMP RATIO and an encoder improves steady state speed accuracy.)
5003	**ENCODER FAULT** Defines the drive operation if a failure is detected in communication between the encoder and the encoder interface module, or between the module and the drive. 1 = FAULT – The drive generates fault ENCODER ERR, and the motor coasts to a stop. 2 = ALARM – The drive generates alarm ENCODER ERR and operates as if parameter 5002 ENCODER ENABLE = 0 (DISABLE), that is, speed feedback is derived from the internal motor model.
5010	**Z PLS ENABLE** Enables/disables the use of an encoder's Z-pulse to define the motor shaft's zero position. When enabled, a Z-pulse input resets parameter 0146 MECH ANGLE to zero to define the shaft's zero position. This function requires an encoder that provides Z-pulse signals. 0 = DISABLE – Z-pulse input is not present or ignored if present. 1 = ENABLE – A Z-pulse input resets parameter 0146 MECH ANGLE to zero.
5011	**POSITION RESET** Resets the encoder's position feedback. This parameter is self-clearing. 0 = DISABLE – Inactive. 1 = ENABLE – Resets the encoder position feedback. Parameters reset depends on the state of parameter 5010 Z PLS ENABLE: • 5010 = 0 (DISABLE) – Reset applies to parameters 0147 MECH REVS and 0146 MECH ANGLE. • 5010 = 1 (ENABLE) – Reset applies only to parameter 0147 MECH REVS.

Group 51: EXT COMM MODULE

This group defines set-up variables for a fieldbus adapter (FBA) communication module. For more information on these parameters, refer to the user's manual supplied with the FBA module.

Code	Description
5101	**FBA TYPE** Displays the type of the connected fieldbus adapter module. 0 = NOT DEFINED – Module not found, or not properly connected, or parameter 9802 is not set to 4 (EXT FBA). 1 = PROFIBUS-DP 16 = INTERBUS 21 = LONWORKS 32 = CANopen 37 = DEVICENET 64 = MODBUS PLUS 101 = CONTROLNET 128 = ETHERNET
5102 … 5126	**FB PAR 2…FB PAR 26** Refer to communication module documentation for more information on these parameters.
5127	**FBA PAR REFRESH** Validates any changed fieldbus parameter settings. 0 = DONE – Refreshing done. 1 = REFRESH – Refreshing. • After refreshing, the value reverts automatically to DONE.
5128	**FILE CPI FW REV** Displays the CPI firmware revision of the drive's fieldbus adapter configuration file. Format is xyz where: • x = major revision number • y = minor revision number • z = correction number **Example:** 107 = revision 1.07
5129	**FILE CONFIG ID** Displays the revision of the drive's fieldbus adapter module's configuration file identification. • File configuration information is drive application program-dependent.
5130	**FILE CONFIG REV** Contains the revision of the drive's fieldbus adapter module configuration file. **Example:** 1 = revision 1
5131	**FBA STATUS** Contains the status of the adapter module. 0 = IDLE – Adapter not configured. 1 = EXECUT INIT – Adapter is initializing. 2 = TIME OUT – A timeout has occurred in the communication between the adapter and the drive. 3 = CONFIG ERROR – Adapter configuration error. • The revision code of the adapter's CPI firmware revision is older than required CPI firmware version defined in the drive's configuration file (parameter 5132 < 5128). 4 = OFF-LINE – Adapter is off-line. 5 = ON-LINE – Adapter is on-line. 6 = RESET – Adapter is performing a hardware reset.
5132	**FBA CPI FW REV** Contains the revision of the module's CPI program. Format is xyz where: • x = major revision number • y = minor revision number • z = correction number **Example:** 107 = revision 1.07
5133	**FBA APPL FW REV** Contains the revision of the module's application program. Format is xyz (see parametrer 5132).

Group 52: PANEL COMM

This group defines the communication settings for the control panel port on the drive. Normally, when using the supplied control panel, there is no need to change settings in this group.

In this group, parameter modifications take effect on the next power-up.

Code	Description
5201	**STATION ID** Defines the address of the drive. • Two units with the same address are not allowed on-line. • Range: 1…247
5202	**BAUD RATE** Defines the communication speed of the drive in kbits per second (kb/s). 9.6 kb/s 19.2 kb/s 38.4 kb/s 57.6 kb/s 115.2 kb/s
5203	**PARITY** Sets the character format to be used with the panel communication. 0 = 8 NONE 1 – No parity, one stop bit. 1 = 8 NONE 2 – No parity, two stop bits. 2 = 8 EVEN 1 – Even parity, one stop bit. 3 = 8 ODD 1 – Odd parity, one stop bit.
5204	**OK MESSAGES** Contains a count of valid Modbus messages received by the drive. • During normal operation, this counter is increasing constantly.
5205	**PARITY ERRORS** Contains a count of the characters with a parity error that is received from the bus. For high counts, check: • Parity settings of devices connected on the bus – they must not differ. • Ambient electro-magnetic noise levels – high noise levels generate errors.
5206	**FRAME ERRORS** Contains a count of the characters with a framing error that the bus receives. For high counts, check: • Communication speed settings of devices connected on the bus – they must not differ. • Ambient electro-magnetic noise levels – high noise levels generate errors.
5207	**BUFFER OVERRUNS** Contains a count of the characters received that cannot be placed in the buffer. • Longest possible message length for the drive is 128 bytes. • Received messages exceeding 128 bytes overflow the buffer. The excess characters are counted.
5208	**CRC ERRORS** Contains a count of the messages with a CRC error that the drive receives. For high counts, check: • Ambient electro-magnetic noise levels – high noise levels generate errors. • CRC calculations for possible errors.

Group 53: EFB PROTOCOL

This group defines set-up variables used for an embedded fieldbus (EFB) communication protocol. The standard EFB protocol in the ACS550 is Modbus. See chapter *Embedded fieldbus* page *189*.

Code	Description
5301	**EFB PROTOCOL ID** Contains the identification and program revision of the protocol. • Format: XXYY, where xx = protocol ID, and YY = program revision.
5302	**EFB STATION ID** Defines the node address of the RS485 link. • The node address on each unit must be unique.
5303	**EFB BAUD RATE** Defines the communication speed of the RS485 link in kbits per second (kb/s). 1.2 kb/s 2.4 kb/s 4.8 kb/s 9.6 kb/s 19.2 kb/s 38.4 kb/s 57.6 kb/s 76.8 kb/s
5304	**EFB PARITY** Defines the data length, parity and stop bits to be used with the RS485 link communication. • The same settings must be used in all on-line stations. 0 = 8 NONE 1 – 8 data bits, no parity, one stop bit. 1 = 8 NONE 2 – 8 data bits, no parity, two stop bits. 2 = 8 EVEN 1 – 8 data bits, even parity, one stop bit. 3 = 8 ODD 1 – 8 data bits, odd parity, one stop bit.
5305	**EFB CTRL PROFILE** Selects the communication profile used by the EFB protocol. 0 = ABB DRV LIM – Operation of Control/Status Words conforms to ABB Drives Profile, as used in ACS400. 1 = DCU PROFILE – Operation of Control/Status Words conforms to 32-bit DCU Profile. 2 = ABB DRV FULL – Operation of Control/Status Words conforms to ABB Drives Profile, as used in ACS600/800.
5306	**EFB OK MESSAGES** Contains a count of valid messages received by the drive. • During normal operation, this counter is increasing constantly.
5307	**EFB CRC ERRORS** Contains a count of the messages with a CRC error received by the drive. For high counts, check: • Ambient electro-magnetic noise levels – high noise levels generate errors. • CRC calculations for possible errors.
5308	**EFB UART ERRORS** Contains a count of the messages with a character error received by the drive.
5309	**EFB STATUS** Contains the status of the EFB protocol. 0 = IDLE – EFB protocol is configured, but not receiving any messages. 1 = EXECUT INIT – EFB protocol is initializing. 2 = TIME OUT – A timeout has occurred in the communication between the network master and the EFB protocol. 3 = CONFIG ERROR – EFB protocol has a configuration error. 4 = OFF-LINE – EFB protocol is receiving messages that are NOT addressed to this drive. 5 = ON-LINE – EFB protocol is receiving messages that are addressed to this drive. 6 = RESET – EFB protocol is performing a hardware reset. 7 = LISTEN ONLY – EFB protocol is in listen-only mode.
5310	**EFB PAR 10** Specifies the parameter mapped to Modbus Register 40005.

Code	Description
5311	**EFB PAR 11** Specifies the parameter mapped to Modbus Register 40006.
5312	**EFB PAR 12** Specifies the parameter mapped to Modbus Register 40007.
5313	**EFB PAR 13** Specifies the parameter mapped to Modbus Register 40008.
5314	**EFB PAR 14** Specifies the parameter mapped to Modbus Register 40009.
5315	**EFB PAR 15** Specifies the parameter mapped to Modbus Register 40010.
5316	**EFB PAR 16** Specifies the parameter mapped to Modbus Register 40011.
5317	**EFB PAR 17** Specifies the parameter mapped to Modbus Register 40012.
5318	**EFB PAR 18** For Modbus: Sets additional delay in milliseconds before the ACS550 begins transmitting response to the master request.
5319	**EFB PAR 19** ABB Drives profile (ABB DRV LIM or ABB DRV FULL) Control Word. Read only copy of the Fieldbus Control Word.
5320	**EFB PAR 20** ABB Drives profile (ABB DRV LIM or ABB DRV FULL) Status Word. Read only copy of the Fieldbus Status Word.

Group 81: PFC CONTROL

This group defines a Pump-Fan Control (PFC) mode of operation. The major features of PFC control are:

- The ACS550 controls the motor of pump no. 1, varying the motor speed to control the pump capacity. This motor is the speed regulated motor.
- Direct line connections power the motor of pump no. 2 and pump no.3, etc. The ACS550 switches pump no. 2 (and then pump no. 3, etc.) on and off as needed. These motors are auxiliary motors.
- The ACS550 PID control uses two signals: a process reference and an actual value feedback. The PID controller adjusts the speed (frequency) of the first pump such that the actual value follows the process reference.
- When demand (defined by the process reference) exceeds the first motor's capacity (user defined as a frequency limit), the PFC control automatically starts an auxiliary pump. The PFC also reduces the speed of the first pump to account for the auxiliary pump's addition to total output. Then, as before, the PID controller adjusts the speed (frequency) of the first pump such that the actual value follows the process reference. If demand continues to increase, PFC adds additional auxiliary pumps, using the same process.
- When demand drops, such that the first pump speed falls below a minimum limit (user defined by a frequency limit), the PFC control automatically stops an auxiliary pump. The PFC also increases the speed of the first pump to account for the auxiliary pump's missing output.
- An Interlock function (when enabled) identifies off-line (out of service) motors, and the PFC control skips to the next available motor in the sequence.
- An Autochange function (when enabled and with the appropriate switchgear) equalizes duty time between the pump motors. Autochange periodically increments the position of each motor in the rotation – the speed regulated motor becomes the last auxiliary motor, the first auxiliary motor becomes the speed regulated motor, etc.

Code	Description
8103	**REFERENCE STEP 1** Sets a percentage value that is added to the process reference. • Applies only when at least one auxiliary (constant speed) motor is running. • Default value is 0%. **Example:** An ACS550 operates three parallel pumps that maintain water pressure in a pipe. • 4011 INTERNAL SETPNT sets a constant pressure reference that controls the pressure in the pipe. • The speed regulated pump operates alone at low water consumption levels. • As water consumption increases, first one constant speed pump operates, then, the second. • As flow increases, the pressure at the output end of the pipe drops relative to the pressure measured at the input end. As auxiliary motors step in to increase the flow, the adjustments below correct the reference to more closely match the output pressure. • When the first auxiliary pump operates, increase the reference with parameter 8103 REFERENCE STEP 1. • When two auxiliary pumps operate, increase the reference with parameter 8103 REFERENCE STEP 1 + parameter 8104 REFERENCE STEP 2. • When three auxiliary pumps operate, increase the reference with parameter 8103 REFERENCE STEP 1 + parameter 8104 REFERENCE STEP 2 + parameter 8105 REFERENCE STEP 3.

Code	Description
8104	**REFERENCE STEP 2** Sets a percentage value that is added to the process reference. • Applies only when at least two auxiliary (constant speed) motors are running. • See parameter 8103 REFERENCE STEP 1.
8105	**REFERENCE STEP 3** Sets a percentage value that is added to the process reference. • Applies only when at least three auxiliary (constant speed) motors are running. • See parameter 8103 REFERENCE STEP 1.
8109	**START FREQ 1** Sets the frequency limit used to start the first auxiliary motor. The first auxiliary motor starts if: • No auxiliary motors are running. • ACS550 output frequency exceeds the limit: 8109 + 1 Hz. • Output frequency stays above a relaxed limit (8109 - 1 Hz) for at least the time: 8115 AUX MOT START D. After the first auxiliary motor starts: • Output frequency decreases by the value = (8109 START FREQ 1) - (8112 LOW FREQ 1). • In effect, the output of the speed regulated motor drops to compensate for the input from the auxiliary motor. See the figure, where: • A = (8109 START FREQ 1) - (8112 LOW FREQ 1) • B = Output frequency increase during the start delay. • C = Diagram showing auxiliary motor's run status as frequency increases (1 = On). **Note:** 8109 START FREQ 1 value must be between: • 8112 LOW FREQ 1 • (2008 MAXIMUM FREQ) -1. 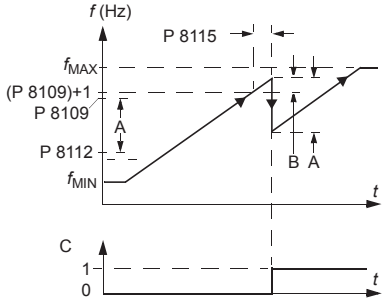
8110	**START FREQ 2** Sets the frequency limit used to start the second auxiliary motor. • See 8109 START FREQ 1 for a complete description of the operation. The second auxiliary motor starts if: • One auxiliary motor is running. • ACS550 output frequency exceeds the limit: 8110 + 1. • Output frequency stays above the relaxed limit (8110 - 1 Hz) for at least the time: 8115 AUX MOT START D.
8111	**START FREQ 3** Sets the frequency limit used to start the third auxiliary motor. • See 8109 START FREQ 1 for a complete description of the operation. The third auxiliary motor starts if: • Two auxiliary motors are running. • ACS550 output frequency exceeds the limit: 8111 + 1 Hz. • Output frequency stays above the relaxed limit (8111 - 1 Hz) for at least the time: 8115 AUX MOT START D.

Code	Description
8112	**LOW FREQ 1** Sets the frequency limit used to stop the first auxiliary motor. The first auxiliary motor stops if: • Only one (the first) auxiliary motor is running. • ACS550 output frequency drops below the limit: 8112 - 1. • Output frequency stays below the relaxed limit (8112 + 1 Hz) for at least the time: 8116 AUX MOT STOP D. After the first auxiliary motor stops: • Output frequency increases by the value = (8109 START FREQ 1) - (8112 LOW FREQ 1). • In effect, the output of the speed regulated motor increases to compensate for the loss of the auxiliary motor. See the figure, where: • A = (8109 START FREQ 1) - (8112 LOW FREQ 1) • B = Output frequency decrease during the stop delay. • C = Diagram showing auxiliary motor's run status as frequency decreases (1 = On). • Grey path = Shows hysteresis – if time is reversed, the path backwards is not the same. For details on the path for starting, see the diagram at 8109 START FREQ 1. **Note:** 8112 LOW FREQ 1 value must be between: • (2007 MINIMUM FREQ) +1. • 8109 START FREQ 1 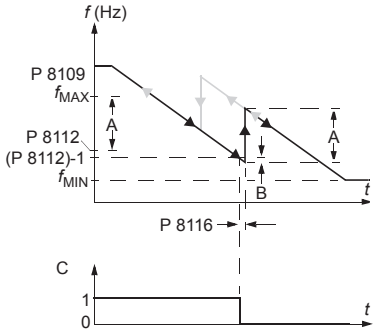
8113	**LOW FREQ 2** Sets the frequency limit used to stop the second auxiliary motor. • See 8112 LOW FREQ 1 for a complete description of the operation. The second auxiliary motor stops if: • Two auxiliary motors are running. • ACS550 output frequency drops below the limit: 8113 - 1. • Output frequency stays below the relaxed limit (8113 + 1 Hz) for at least the time: 8116 AUX MOT STOP D.
8114	**LOW FREQ 3** Sets the frequency limit used to stop the third auxiliary motor. • See 8112 LOW FREQ 1 for a complete description of the operation. The third auxiliary motor stops if: • Three auxiliary motors are running. • ACS550 output frequency drops below the limit: 8114 - 1. • Output frequency stays below the relaxed limit (8114 + 1 Hz) for at least the time: 8116 AUX MOT STOP D.
8115	**AUX MOT START D** Sets the Start Delay for the auxiliary motors. • The output frequency must remain above the start frequency limit (parameter 8109, 8110, or 8111) for this time period before the auxiliary motor starts. • See 8109 START FREQ 1 for a complete description of the operation.
8116	**AUX MOT STOP D** Sets the Stop Delay for the auxiliary motors. • The output frequency must remain below the low frequency limit (parameter 8112, 8113, or 8114) for this time period before the auxiliary motor stops. • See 8112 LOW FREQ 1 for a complete description of the operation.

Code	Description
8117	**NR OF AUX MOT** Sets the number of auxiliary motors. • Each auxiliary motor requires a relay output, which the drive uses to send start/stop signals. • The Autochange function, if used, requires an additional relay output for the speed regulated motor. • The following describes the set-up of the required relay outputs. **Relay outputs** As noted above, each auxiliary motor requires a relay output, which the drive uses to send start/stop signals. The following describes how the drive keeps track of motors and relays. • The ACS550 provides relay outputs RO1…RO3. • An external digital output module can be added to provide relay outputs RO4…RO6. • Parameters 1401…1403 and 1410…1412 define, respectively, how relays RO1…RO6 are used – the parameter value 31 PFC defines the relay as used for PFC. • The ACS550 assigns auxiliary motors to relays in ascending order. If the Autochange function is disabled, the first auxiliary motor is the one connected to the first relay with a parameter setting = 31 PFC, and so on. If the Autochange function is used, the assignments rotate. Initially, the speed regulated motor is the one connected to the first relay with a parameter setting = 31 PFC, the first auxiliary motor is the one connected to the second relay with a parameter setting = 31 PFC, and so on. 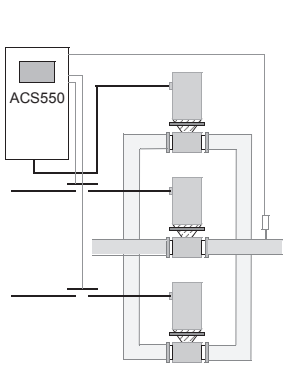 Standard PFC mode 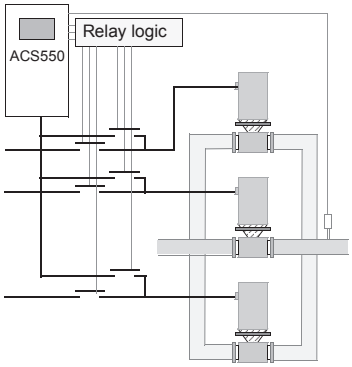 PFC with Autochange mode • The fourth auxiliary motor uses the same reference step, low frequency and start frequency values as the third auxiliary motor.

Code	Description

- The table below shows the ACS550 PFC motor assignments for some typical settings in the Relay Output parameters (1401…1403 and 1410…1412), where the settings are either =31 (PFC), or =X (anything but 31), and where the Autochange function is disabled (8118 AUTOCHNG INTERV = 0).

Parameter setting							ACS550 Relay assignment					
							Autochange disabled					
1401	1402	1403	1410	1411	1412	8117	RO1	RO2	RO3	RO4	RO5	RO6
31	X	X	X	X	X	1	Aux.	X	X	X	X	X
31	31	X	X	X	X	2	Aux.	Aux.	X	X	X	X
31	31	31	X	X	X	3	Aux.	Aux.	Aux.	X	X	X
X	31	31	X	X	X	2	X	Aux.	Aux.	X	X	X
X	X	X	31	X	31	2	X	X	X	Aux.	X	Aux.
31	31	X	X	X	X	1*	Aux.	Aux.	X	X	X	X

* = One additional relay output for the PFC that is in use. One motor is in "sleep" when the other is rotating.

- The table below shows the ACS550 PFC motor assignments for some typical settings in the Relay Output parameters (1401…1403 and 1410…1412), where the settings are either =31 (PFC), or =X (anything but 31), and where the Autochange function is enabled (8118 AUTOCHNG INTERV = value > 0).

Parameter setting							ACS550 Relay assignment					
							Autochange enabled					
1401	1402	1403	1410	1411	1412	8117	RO1	RO2	RO3	RO4	RO5	RO6
31	31	X	X	X	X	1	PFC	PFC	X	X	X	X
31	31	31	X	X	X	2	PFC	PFC	PFC	X	X	X
X	31	31	X	X	X	1	X	PFC	PFC	X	X	X
X	X	X	31	X	31	1	X	X	X	PFC	X	PFC
31	31	X	X	X	X	0**	PFC	PFC	X	X	X	X

** = No auxiliary motors, but the autochange function is in use. Working as a standard PID-control.

8118 **AUTOCHNG INTERV**

Controls operation of the Autochange function and sets the interval between changes.

- The Autochange time interval only applies to the time when the speed regulated motor is running.
- See parameter 8119 AUTOCHNG LEVEL for an overview of the Autochange function.
- The drive always coasts to stop when autochange is performed.
- Autochange enabled requires parameter 8120 INTERLOCKS = value > 0.

-0.1 = TEST MODE – Forces the interval to value 36…48 s.
0.0 = NOT SEL – Disables the Autochange function.
0.1…336 – The operating time interval (the time when the start signal is on) between automatic motor changes.

WARNING! When enabled, the Autochange function requires the interlocks (8120 INTERLOCKS = value > 0) enabled. During autochange the power output is interrupted and the drive coasts to stop, preventing damage to the contacts.

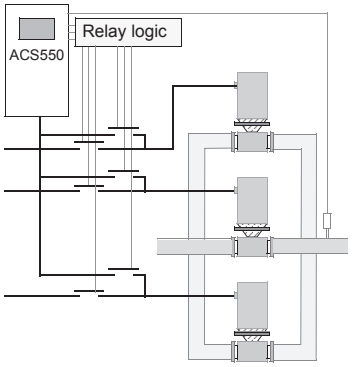

PFC with Autochange mode

Code	Description
8119	**AUTOCHNG LEVEL** Sets an upper limit, as a percent of output capacity, for the autochange logic. When the output from the PID/PFC control block exceeds this limit, autochange is prevented. For example, use this parameter to deny autochange when the Pump-Fan system is operating near maximum capacity. **Autochange overview** The purpose of the autochange operation is to equalize duty time between multiple motors used in a system. At each autochange operation: • A different motor takes a turn connected to the ACS550 output – the speed regulated motor. • The starting order of the other motors rotates. The Autochange function requires: • External switchgear for changing the drive's output power connections. • Parameter 8120 INTERLOCKS = value > 0. Autochange is performed when: • The running time since the previous autochange reaches the time set by 8118 AUTOCHNG INTERV. • The PFC input is below the level set by this parameter, 8119 AUTOCHNG LEVEL. **Note:** The ACS550 always coasts to stop when autochange is performed. In an autochange, the Autochange function does all of the following (see the figure): • Initiates a change when the running time, since the last autochange, reaches 8118 AUTOCHNG INTERV, and PFC input is below limit 8119 AUTOCHNG LEVEL. • Stops the speed regulated motor. • Switches off the contactor of the speed regulated motor. • Increments the starting order counter, to change the starting order for the motors. • Identifies the next motor in line to be the speed regulated motor. • Switches off the above motor's contactor, if the motor was running. Any other running motors are not interrupted. • Switches on the contactor of the new speed regulated motor. The autochange switchgear connects this motor to the ACS550 power output. • Delays motor start for the time 8122 PFC START DELAY. • Starts the speed regulated motor. • Identifies the next constant speed motor in the rotation. • Switches the above motor on, but only if the new speed regulated motor had been running (as a constant speed motor) – This step keeps an equal number of motors running before and after autochange. • Continues with normal PFC operation. 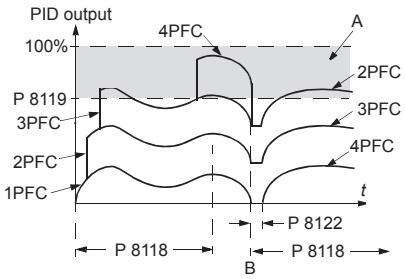 A = Area above 8119 AUTOCHNG LEVEL – autochange not allowed. B = Autochange occurs. 1PFC, etc. = PID output associated with each motor. **Starting order counter** The operation of the starting-order counter: • The relay output parameter definitions (1401…1403 and 1410…1412) establish the initial motor sequence. (The lowest parameter number with a value 31 (PFC) identifies the relay connected to 1PFC, the first motor, and so on.) • Initially, 1PFC = speed regulated motor, 2PFC = 1st auxiliary motor, etc. • The first autochange shifts the sequence to: 2PFC = speed regulated motor, 3PFC = 1st auxiliary motor, …, 1PFC = last auxiliary motor. • The next autochange shifts the sequence again, and so on. • If the autochange cannot start a needed motor because all inactive motors are interlocked, the drive displays an alarm (2015, PFC I LOCK). 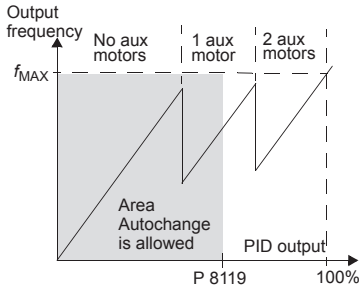 • When ACS550 power supply is switched off, the counter preserves the current Autochange rotation positions in permanent memory. When power is restored, the Autochange rotation starts at the position stored in memory. • If the PFC relay configuration is changed (or if the PFC enable value is changed), the rotation is reset. (See the first bullet above.)

Code	Description
8120	**INTERLOCKS** Defines operation of the Interlock function. When the Interlock function is enabled: • An interlock is active when its command signal is absent. • An interlock is inactive when its command signal is present. • The ACS550 will not start if a start command occurs when the speed regulated motor's interlock is active – the control panel displays an alarm (2015, PFC I LOCK). Wire each Interlock circuit as follows: • Wire a contact of the motor's On/Off switch to the Interlock circuit – the drive's PFC logic can then recognize that the motor is switched off and start the next available motor. • Wire a contact of the motor thermal relay (or other protective device in the motor circuit) to the Interlock input – the drive's PFC logic can then recognize that a motor fault is activated and stop the motor. 0 = NOT SEL – Disables the Interlock function. All digital inputs are available for other purposes. • Requires 8118 AUTOCHNG INTERV = 0 (The Autochange function must be disabled if Interlock function is disabled.) 1 = DI1 – Enables the Interlock function and assigns a digital input (starting with DI1) to the interlock signal for each PFC relay. These assignments are defined in the following table and depend on: • the number of PFC relays [number of parameters 1401…1403 and 1410…1412 with value = 31 (PFC)] • the Autochange function status (disabled if 8118 AUTOCHNG INTERV = 0, and otherwise enabled).

No. PFC relays	Autochange disabled (P 8118)	Autochange enabled (P 8118)
0	DI1: Speed Reg Motor DI2…DI6: Free	Not allowed
1	DI1: Speed Reg Motor DI2: First PFC Relay DI3…DI6: Free	DI1: First PFC Relay DI2…DI6: Free
2	DI1: Speed Reg Motor DI2: First PFC Relay DI3: Second PFC Relay DI4…DI6: Free	DI1: First PFC Relay DI2: Second PFC Relay DI3…DI6: Free
3	DI1: Speed Reg Motor DI2: First PFC Relay DI3: Second PFC Relay DI4: Third PFC Relay DI5…DI6: Free	DI1: First PFC Relay DI2: Second PFC Relay DI3: Third PFC Relay DI4…DI6: Free
4	DI1: Speed Reg Motor DI2: First PFC Relay DI3: Second PFC Relay DI4: Third PFC Relay DI5: Fourth PFC Relay DI6: Free	DI1: First PFC Relay DI2: Second PFC Relay DI3: Third PFC Relay DI4: Fourth PFC Relay DI5…DI6: Free
5	DI1: Speed Reg Motor DI2: First PFC Relay DI3: Second PFC Relay DI4: Third PFC Relay DI5: Fourth PFC Relay DI6: Fifth PFC Relay	DI1: First PFC Relay DI2: Second PFC Relay DI3: Third PFC Relay DI4: Fourth PFC Relay DI5: Fifth PFC Relay DI6: Free
6	Not allowed	DI1: First PFC Relay DI2: Second PFC Relay DI3: Third PFC Relay DI4: Fourth PFC Relay DI5: Fifth PFC Relay DI6: Sixth PFC Relay

Code	Description
	2 = DI2 – Enables the Interlock function and assigns a digital input (starting with DI2) to the interlock signal for each PFC relay. These assignments are defined in the following table and depend on: • the number of PFC relays [number of parameters 1401…1403 and 1410…1412 with value = 31 (PFC)] • the Autochange function status (disabled if 8118 AUTOCHNG INTERV = 0, and otherwise enabled).

No. PFC relays	Autochange disabled (P 8118)	Autochange enabled (P 8118)
0	DI1: Free DI2: Speed Reg Motor DI3…DI6: Free	Not allowed
1	DI1: Free DI2: Speed Reg Motor DI3: First PFC Relay DI4…DI6: Free	DI1: Free DI2: First PFC Relay DI3…DI6: Free
2	DI1: Free DI2: Speed Reg Motor DI3: First PFC Relay DI4: Second PFC Relay DI5…DI6: Free	DI1: Free DI2: First PFC Relay DI3: Second PFC Relay DI4…DI6: Free
3	DI1: Free DI2: Speed Reg Motor DI3: First PFC Relay DI4: Second PFC Relay DI5: Third PFC Relay DI6: Free	DI1: Free DI2: First PFC Relay DI3: Second PFC Relay DI4: Third PFC Relay DI5…DI6: Free
4	DI1: Free DI2: Speed Reg Motor DI3: First PFC Relay DI4: Second PFC Relay DI5: Third PFC Relay DI6: Fourth PFC Relay	DI1: Free DI2: First PFC Relay DI3: Second PFC Relay DI4: Third PFC Relay DI5: Fourth PFC Relay DI6: Free
5	Not allowed	DI1: Free DI2: First PFC Relay DI3: Second PFC Relay DI4: Third PFC Relay DI5: Fourth PFC Relay DI6: Fifth PFC Relay
6	Not allowed	Not allowed

<table>
<tr><th>Code</th><th>Description</th></tr>
<tr><td></td><td>
3 = DI3 – Enables the Interlocks function and assigns a digital input (starting with DI3) to the interlock signal for each PFC relay. These assignments are defined in the following table and depend on:
• the number of PFC relays [number of parameters 1401…1403 and 1410…1412 with value = 31 (PFC)]
• the Autochange function status (disabled if 8118 AUTOCHNG INTERV = 0, and otherwise enabled).
<table>
<tr><th>No. PFC relays</th><th>Autochange disabled (P 8118)</th><th>Autochange enabled (P 8118)</th></tr>
<tr><td>0</td><td>DI1…DI2: Free
DI3: Speed Reg Motor
DI4…DI6: Free</td><td>Not allowed</td></tr>
<tr><td>1</td><td>DI1…DI2: Free
DI3: Speed Reg Motor
DI4: First PFC Relay
DI5…DI6: Free</td><td>DI1…DI2: Free
DI3: First PFC Relay
DI4…DI6: Free</td></tr>
<tr><td>2</td><td>DI1…DI2: Free
DI3: Speed Reg Motor
DI4: First PFC Relay
DI5: Second PFC Relay
DI6: Free</td><td>DI1…DI2: Free
DI3: First PFC Relay
DI4: Second PFC Relay
DI5…DI6: Free</td></tr>
<tr><td>3</td><td>DI1…DI2: Free
DI3: Speed Reg Motor
DI4: First PFC Relay
DI5: Second PFC Relay
DI6: Third PFC Relay</td><td>DI1…DI2: Free
DI3: First PFC Relay
DI4: Second PFC Relay
DI5: Third PFC Relay
DI6: Free</td></tr>
<tr><td>4</td><td>Not allowed</td><td>DI1…DI2: Free
DI3: First PFC Relay
DI4: Second PFC Relay
DI5: Third PFC Relay
DI6: Fourth PFC Relay</td></tr>
<tr><td>5…6</td><td>Not allowed</td><td>Not allowed</td></tr>
</table>
4 = DI4 – Enables the Interlock function and assigns a digital input (starting with DI4) to the interlock signal for each PFC relay. These assignments are defined in the following table and depend on:
• the number of PFC relays [number of parameters 1401…1403 and 1410…1412 with value = 31 (PFC)]
• the Autochange function status (disabled if 8118 AUTOCHNG INTERV = 0, and otherwise enabled).
<table>
<tr><th>No. PFC relays</th><th>Autochange disabled (P 8118)</th><th>Autochange enabled (P 8118)</th></tr>
<tr><td>0</td><td>DI1…DI3: Free
DI4: Speed Reg Motor
DI5…DI6: Free</td><td>Not allowed</td></tr>
<tr><td>1</td><td>DI1…DI3: Free
DI4: Speed Reg Motor
DI5: First PFC Relay
DI6: Free</td><td>DI1…DI3: Free
DI4: First PFC Relay
DI5…DI6: Free</td></tr>
<tr><td>2</td><td>DI1…DI3: Free
DI4: Speed Reg Motor
DI5: First PFC Relay
DI6: Second PFC Relay</td><td>DI1…DI3: Free
DI4: First PFC Relay
DI5: Second PFC Relay
DI6: Free</td></tr>
<tr><td>3</td><td>Not allowed</td><td>DI1…DI3: Free
DI4: First PFC Relay
DI5: Second PFC Relay
DI6: Third PFC Relay</td></tr>
<tr><td>4…6</td><td>Not allowed</td><td>Not allowed</td></tr>
</table>
</td></tr>
</table>

Code	Description
	5 = DI5 – Enables the Interlock function and assigns a digital input (starting with DI5) to the interlock signal for each PFC relay. These assignments are defined in the following table and depend on: • the number of PFC relays [number of parameters 1401…1403 and 1410…1412 with value = 31 (PFC)] • the Autochange function status (disabled if 8118 AUTOCHNG INTERV = 0, and otherwise enabled).

No. PFC relays	Autochange disabled (P 8118)	Autochange enabled (P 8118)
0	DI1…DI4: Free DI5: Speed Reg Motor DI6: Free	Not allowed
1	DI1…DI4: Free DI5: Speed Reg Motor DI6: First PFC Relay	DI1…DI4: Free DI5: First PFC Relay DI6: Free
2	Not allowed	DI1…DI4: Free DI5: First PFC Relay DI6: Second PFC Relay
3…6	Not allowed	Not allowed

6 = DI6 – Enables the Interlock function and assigns digital input DI6 to the interlock signal for the speed regulated motor.
• Requires 8118 AUTOCHNG INTERV = 0.

No. PFC relays	Autochange disabled	Autochange enabled
0	DI1…DI5: Free DI6: Speed Reg Motor	Not allowed
1	Not allowed	DI1…DI5: Free DI6: First PFC Relay
2…6	Not allowed	Not allowed

Code	Description
8121	**REG BYPASS CTRL** Selects Regulator by-pass control. When enabled, Regulator by-pass control provides a simple control mechanism without a PID regulator. • Use Regulator by-pass control only in special applications. 0 = NO – Disables Regulator by-pass control. The drive uses the normal PFC reference: 1106 REF2 SELECT. 1 = YES – Enables Regulator by-pass control. • The process PID regulator is bypassed. Actual value of PID is used as the PFC reference (input). Normally EXT REF2 is used as the PFC reference. • The drive uses the feedback signal defined by 4014 FBK SEL (or 4114) for the PFC frequency reference. • The figure shows the relation between the control signal 4014 FBK SEL (OR 4114) and the speed regulated motor's frequency in a three-motor system. Example: In the diagram below, the pumping station's outlet flow is controlled by the measured inlet flow (A). 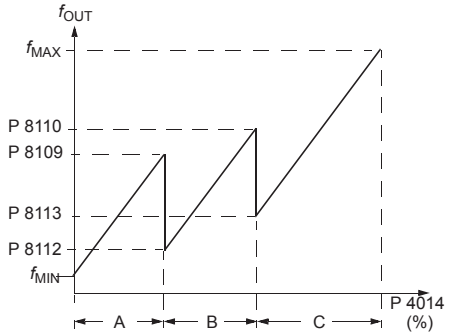 A = No auxiliary motors running B = One auxiliary motor running C = Two auxiliary motors running 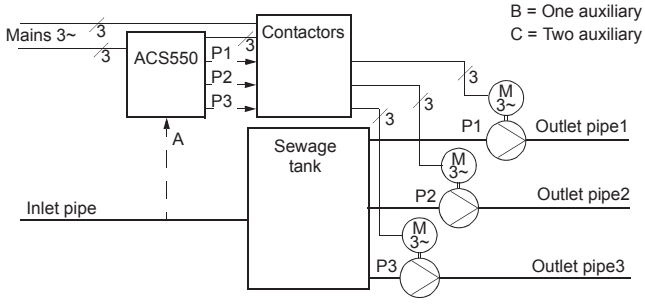
8122	**PFC START DELAY** Sets the start delay for speed regulated motors in the system. Using the delay, the drive works as follows: • Switches on the contactor of the speed regulated motor – connecting the motor to the ACS550 power output. • Delays motor start for the time 8122 PFC START DELAY. • Starts the speed regulated motor. • Starts auxiliary motors. See parameter 8115 for delay. **WARNING!** Motors equipped with star-delta starters require a PFC Start Delay. • After the ACS550 relay output switches a motor on, the star-delta starter must switch to the star-connection and then back to the delta-connection before the drive applies power. • So, the PFC Start Delay must be longer than the time setting of the star-delta starter.
8123	**PFC ENABLE** Selects PFC control. When enabled, PFC control: • Switches in, or out, auxiliary constant speed motors as output demand increases or decreases. Parameters 8109 START FREQ 1 to 8114 LOW FREQ 3 define the switch points in terms of the drive output frequency. • Adjusts the speed regulated motor output down, as auxiliary motors are added, and adjusts the speed regulated motor output up, as auxiliary motors are taken off line. • Provides Interlock functions, if enabled. • Requires 9904 MOTOR CTRL MODE = 3 (SCALAR:FREQ). 0 = NOT SEL – Disables PFC control. 1 = ACTIVE – Enables PFC control.

Code	Description
8124	**ACC IN AUX STOP** Sets the PFC acceleration time for a zero-to-maximum frequency ramp. This PFC acceleration ramp: • Applies to the speed regulated motor, when an auxiliary motor is switched off. • Replaces the acceleration ramp defined in *Group 22: ACCEL/DECEL*l. • Applies only until the output of the regulated motor increases by an amount equal to the output of the switched off auxiliary motor. Then the acceleration ramp defined in *Group 22: ACCEL/DECEL* applies. 0 = NOT SEL. 0.1…1800 – Activates this function using the value entered as the acceleration time.
8125	**DEC IN AUX START** Sets the PFC deceleration time for a maximum-to-zero frequency ramp. This PFC deceleration ramp: • Applies to the speed regulated motor, when an auxiliary motor is switched on. • Replaces the deceleration ramp defined in *Group 22: ACCEL/DECEL*. • Applies only until the output of the regulated motor decreases by an amount equal to the output of the auxiliary motor. Then the deceleration ramp defined in *Group 22: ACCEL/DECEL* applies. 0 = NOT SEL. 0.1…1800 – Activates this function using the value entered as the deceleration time.
	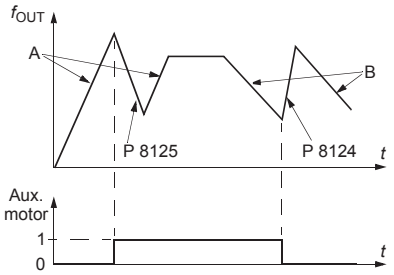 • A = speed regulated motor accelerating using *Group 22: ACCEL/DECEL* parameters (2202 or 2205). • B = speed regulated motor decelerating using *Group 22: ACCEL/DECEL* parameters (2203 or 2206). • At aux. motor start, speed regulated motor decelerates using 8125 DEC IN AUX START. • At aux. motor stop, speed regulated motor accelerates using 8124 ACC IN AUX STOP.
8126	**TIMED AUTOCHNG** Sets the autochange using a Timed function. See parameter 8119 AUTOCHNG LEVEL. 0 = NOT SEL. 1 = TIMED FUNC 1 – Enables autochange when Timed function 1 is active. 2…4 = TIMED FUNC 2…4 – Enables autochange when Timed function 2…4 is active.
8127	**MOTORS** Sets the actual number of PFC controlled motors (maximum 7 motors, 1 speed regulated, 3 connected direct-on-line and 3 spare motors). • This value includes also the speed regulated motor. • This value must be compatible with the number of relays allocated to PFC if the Autochange function is used. • If Autochange function is not used, the speed regulated motor does not need to have a relay output allocated to PFC but it needs to be included in this value.
8128	**AUX START ORDER** Sets the start order of the auxiliary motors. 1 = EVEN RUNTIME – Time sharing is active. The start order depends on the run times. 2 = RELAY ORDER – The start order is fixed to be the order of the relays.

Group 98: OPTIONS

This group configures for options, in particular, enabling serial communication with the drive.

Code	Description
9802	**COMM PROT SEL** Selects the communication protocol. 0 = NOT SEL – No communication protocol selected. 1 = STD MODBUS – The drive communicates with Modbus via the RS485 channel (X1-communications, terminal). • See also *Group 53: EFB PROTOCOL*. 4 = EXT FBA – The drive communicates via a fieldbus adapter module in option slot 2 of the drive. • See also *Group 51: EXT COMM MODULE*.

Embedded fieldbus

Overview

The ACS550 can be set up to accept control from an external system using standard serial communication protocols. When using serial communication, the ACS550 can either:

- receive all of its control information from the fieldbus, or
- be controlled from some combination of fieldbus control and other available control locations, such as digital or analog inputs and the control panel.

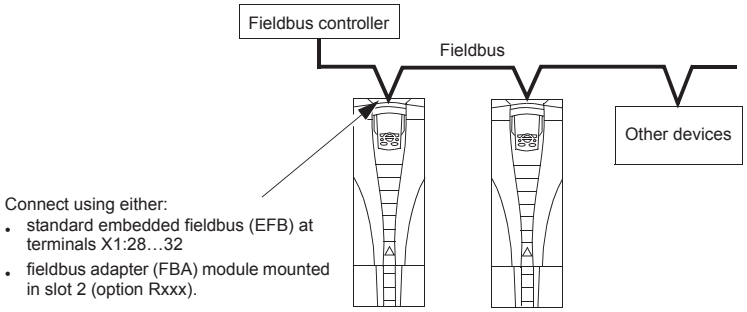

Two basic serial communications configurations are available:

- embedded fieldbus (EFB) – Using the RS485 interface at terminals X1:28…32 on the control board, a control system can communicate with the drive using the Modbus® protocol. (For protocol and profile descriptions, see sections *Modbus protocol technical data* and *ABB control profiles technical data* later in this chapter.)
- fieldbus adapter (FBA) – See chapter *Fieldbus adapter* on page *221*.

Control interface

In general, the basic control interface between Modbus and the drive consists of:

- Output words
  - Control Word
  - Reference1
  - Reference2
- Input words
  - Status Word
  - Actual value 1
  - Actual value 2

– Actual value 3
– Actual value 4
– Actual value 5
– Actual value 6
– Actual value 7
– Actual value 8

The content of these words is defined by profiles. For details on the profiles used, sees section *ABB control profiles technical data* on page *209*.

Note: The words "output" and "input" are used as seen from the fieldbus controller point of view. For example an output describes data flow from the fieldbus controller to the drive and appears as an input from the drive point of view.

Planning

Network planning should address the following questions:

- What types and quantities of devices must be connected to the network?
- What control information must be sent down to the drives?
- What feedback information must be sent from the drives to the controlling system?

Mechanical and electrical installation – EFB

WARNING! Connections should be made only while the drive is disconnected from the power source.

Drive terminals 28…32 are for RS485 communications.

- Use Belden 9842 or equivalent. Belden 9842 is a dual twisted, shielded pair cable with a wave impedance of 120 ohm.
- Use one of these twisted shielded pairs for the RS485 link. Use this pair to connect all A (-) terminals together and all B (+) terminals together.
- Use one of the wires in the other pair for the logical ground (terminal 31), leaving one wire unused.
- Do not directly ground the RS485 network at any point. Ground all devices on the network using their corresponding earthing terminals.
- As always, the grounding wires should not form any closed loops, and all the devices should be earthed to a common ground.
- Connect the RS485 link in a daisy-chained bus, without dropout lines.

- To reduce noise on the network, terminate the RS485 network using 120 Ω resistors at both ends of the network. Use the DIP switch to connect or disconnect the termination resistors. See following diagram and table.

X1	Identification	Hardware description
28	Screen	RS485 Multidrop application
29	B (Positive +)	
30	A (Negative -)	
31	AGND	
32	Screen	

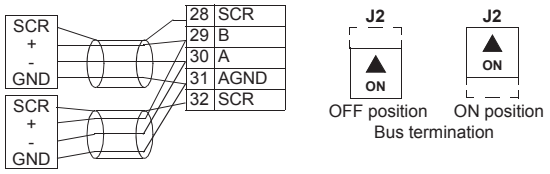

- Connect the shield at each end of the cable to a drive. On one end, connect the shield to terminal 28, and on the other end connect to terminal 32. Do not connect the incoming and outgoing cable shields to the same terminals, as that would make the shielding continuous.
- For configuration information see the following sections:
  - *Communication set-up – EFB* on page *191*
  - *Activate drive control functions – EFB* on page *193*
  - The appropriate EFB protocol specific technical data. For example, *Modbus protocol technical data* on page *201*.

Communication set-up – EFB

Serial communication selection

To activate the serial communication, set parameter 9802 COMM PROT SEL = 1 (STD MODBUS).

Note: If you cannot see the desired selection on the panel, your drive does not have that protocol software in the application memory.

Serial communication configuration

Setting 9802 automatically sets the appropriate default values in parameters that define the communication process. These parameters and descriptions are defined below. In particular, note that the station Id may require adjustment.

Code	Description	Protocol reference
		Modbus
5301	EFB PROTOCOL ID Contains the identification and program revision of the protocol.	Do not edit. Any non-zero value entered for parameter 9802 COMM PROT SEL, sets this parameter automatically. The format is: XXYY, where XX = protocol ID, and YY = program revision.
5302	EFB STATION ID Defines the node address of the RS485 link. **Note:** For a new address to take affect, the drive power must be cycled **or** 5302 must first be set to 0 before selecting a new address. Leaving 5302 = 0 places the RS485 channel in reset, disabling communication.	Set each drive on the network with a unique value for this parameter. When this protocol is selected, the default value for this parameter is: 1
5303	EFB BAUD RATE Defines the communication speed of the RS485 link in kbits per second (kbits/s). 1.2 kb/s 19.2 kb/s 2.4 kb/s 38.4 kb/s 4.8 kb/s 57.6 kb/s 9.6 kb/s 76.8 kb/s	When this protocol is selected, the default value for this parameter is: 9.6
5304	EFB PARITY Defines the data length, parity and stop bits to be used with the RS485 communication. • The same settings must be used in all on-line stations. 0 = 8 NONE 1 – 8 data bits, no parity, one stop bit. 1 = 8 NONE 2 – 8 data bits, no parity, two stop bits. 2 = 8 EVEN 1 – 8 data bits, even parity, one stop bit. 3 = 8 ODD 1 – 8 data bits, odd parity, one stop bit.	When this protocol is selected, the default value for this parameter is: 1
5305	EFB CTRL PROFILE Selects the communication profile used by the EFB protocol. 0 = ABB DRV LIM – Operation of Control/Status Words conforms to ABB Drives Profile, as used in ACS400. 1 = DCU PROFILE – Operation of Control/Status Words conforms to 32-bit DCU Profile. 2 = ABB DRV FULL – Operation of Control/Status Words conforms to ABB Drives Profile, as used in ACS600/800.	When this protocol is selected, the default value for this parameter is: 0

Note: After any changes to the communication settings, the protocol must be reactivated by either cycling the drive power, or by clearing and then restoring the station Id (5302).

Activate drive control functions – EFB

Controlling the drive

Fieldbus control of various drive functions requires configuration to:

- tell the drive to accept fieldbus control of the function
- define as a fieldbus input, any drive data required for control
- define as a fieldbus output, any control data required by the drive.

The following sections describe, at a general level, the configuration required for each control function. For the protocol-specific details, see the document supplied with the FBA module.

Start/Stop Direction control

Using the fieldbus for start/stop/direction control of the drive requires:

- drive parameter values set as defined below
- fieldbus controller supplied command(s) in the appropriate location. (The location is defined by the Protocol Reference, which is protocol dependent.)

Drive parameter		Value	Description	Modbus[1] protocol reference	
				ABB DRV	DCU PROFILE
1001	EXT1 COMMANDS	10 (COMM)	Start/Stop by fieldbus with Ext1 selected.	40001 bits 0…3	40031 bits 0, 1
1002	EXT2 COMMANDS	10 (COMM)	Start/Stop by fieldbus with Ext2 selected.	40001 bits 0…3	40031 bits 0, 1
1003	DIRECTION	3 (REQUEST)	Direction by fieldbus.	4002/4003[2]	40031 bit 3

[1] For Modbus, the protocol reference can depend on the profile used, hence two columns in these tables. One column refers to the ABB Drives profile, selected when parameter 5305 = 0 (ABB DRV LIM) or 5305 = 2 (ABB DRV FULL). The other column refers to the DCU profile selected when parameter 5305 = 1 (DCU PROFILE). See section *ABB control profiles technical data* on page *209*.

[2] The reference provides direction control – a negative reference provides reverse rotation.

Input reference select

Using the fieldbus to provide input references to the drive requires:

- drive parameter values set as defined below
- fieldbus controller supplied reference word(s) in the appropriate location. (The location is defined by the Protocol Reference, which is protocol dependent.)

Drive parameter		Value	Description	Modbus protocol reference	
				ABB DRV	DCU PROFILE
1102	EXT1/EXT2 SEL	8 (COMM)	Reference set selection by fieldbus.	40001 bit 11	40031 bit 5
1103	REF1 SELECT	8 (COMM)	Input reference 1 by fieldbus.	40002	
1106	REF2 SELECT	8 (COMM)	Input reference 2 by fieldbus.	40003	

Reference Scaling

Where required, REFERENCES can be scaled. See the following, as appropriate:

- Modbus Register *40002* in section *Modbus protocol technical data* on page *201*
- *Reference scaling* in section *ABB control profiles technical data* on page *209*.

Miscellaneous drive control

Using the fieldbus for miscellaneous drive control requires:

- drive parameter values set as defined below
- fieldbus controller supplied command(s) in the appropriate location. (The location is defined by the Protocol Reference, which is protocol dependent.)

Drive parameter		Value	Description	Modbus protocol reference	
				ABB DRV	DCU PROFILE
1601	RUN ENABLE	7 (COMM)	Run enable by fieldbus.	40001 bit 3	40031 bit 6 (inverted)
1604	FAULT RESET SEL	8 (COMM)	Fault reset by fieldbus.	40001 bit 7	40031 bit 4
1606	LOCAL LOCK	8 (COMM)	Source for local lock selection is the fieldbus.	Does not apply	40031 bit 14
1607	PARAM SAVE	1 (SAVE)	Saves altered parameters to memory (then value returns to 0).	41607	
1608	START ENABLE 1	7 (COMM)	Source for start enable 1 is the fieldbus Command word.	Does not apply.	40032 bit 2
1609	START ENABLE 2	7 (COMM)	Source for start enable 2 is the fieldbus Command word.		40032 bit 3
2013	MIN TORQUE SEL	7 (COMM)	Source for minimum torque selection is the fieldbus.		40031 bit 15
2014	MAX TORQUE SEL	7 (COMM)	Source for maximum torque selection is the fieldbus.		
2201	ACC/DEC 1/2 SEL	7 (COMM)	Source for ramp pair selection is the fieldbus.		40031 bit 10

Relay output control

Using the fieldbus for relay output control requires:

- drive parameter values set as defined below
- fieldbus controller supplied, binary coded, relay command(s) in the appropriate location. (The location is defined by the Protocol Reference, which is protocol dependent.)

Drive parameter		Value	Description	Modbus protocol reference	
				ABB DRV	DCU PROFILE
1401	RELAY OUTPUT 1	35 (COMM)	Relay Output 1 controlled by fieldbus.	40134 bit 0 or 00033	
1402	RELAY OUTPUT 2	35 (COMM)	Relay Output 2 controlled by fieldbus.	40134 bit 1 or 00034	
1403	RELAY OUTPUT 3	35 (COMM)	Relay Output 3 controlled by fieldbus.	40134 bit 2 or 00035	
1410[1]	RELAY OUTPUT 4	35 (COMM)	Relay Output 4 controlled by fieldbus.	40134 bit 3 or 00036	
1411[1]	RELAY OUTPUT 5	35 (COMM)	Relay Output 5 controlled by fieldbus.	40134 bit 4 or 00037	
1412[1]	RELAY OUTPUT 6	35 (COMM)	Relay Output 6 controlled by fieldbus.	40134 bit 5 or 00038	

[1] More than 3 relays requires the addition of a relay extension module.

Note: Relay status feedback occurs without configuration as defined below.

Drive parameter		Description	Modbus protocol reference	
			ABB DRV	DCU PROFILE
0122	RO 1-3 STATUS	Relay 1…3 status.	40122	
0123	RO 4-6 STATUS	Relay 4…6 status.	40123	

Analog output control

Using the fieldbus for analog output control (e.g. PID setpoint) requires:

- drive parameter values set as defined below
- fieldbus controller supplied analog value(s) in the appropriate location. (The location is defined by the Protocol Reference, which is protocol dependent.)

Drive parameter		Value	Description	Modbus protocol reference	
				ABB DRV	DCU PROFILE
1501	AO1 CONTENT SEL	135 (COMM VALUE 1)	Analog Output 1 controlled by writing to parameter 0135.	–	
0135	COMM VALUE 1	–		40135	
1507	AO2 CONTENT SEL	136 (COMM VALUE 2)	Analog Output 2 controlled by writing to parameter 0136.	–	
0136	COMM VALUE 2	–		40136	

PID control setpoint source

Using the following settings to select the fieldbus as the setpoint source for PID loops:

Drive parameter		Value	Description	Modbus protocol reference	
				ABB DRV	DCU PROFILE
4010	SET POINT SEL (Set 1)	8 (COMM VALUE 1) 9 (COMM+AI1) 10 (COMM*AI1)	Setpoint is input reference 2 (+/-/* AI1)	40003	
4110	SET POINT SEL (Set 2)				
4210	SET POINT SEL (Ext/Trim)				

Communication fault

When using fieldbus control, specify the drive's action if serial communication is lost.

Drive parameter		Value	Description
3018	COMM FAULT FUNC	0 (NOT SEL) 1 (FAULT) 2 (CONST SP7) 3 (LAST SPEED)	Set for appropriate drive response.
3019	COMM FAULT TIME	Set time delay before acting on a communication loss.	

Feedback from the drive – EFB

Pre-defined feedback

Inputs to the controller (drive outputs) have pre-defined meanings established by the protocol. This feedback does not require drive configuration. The following table lists a sample of feedback data. For a complete listing, see input word/point/object listings in the technical data for the appropriate protocol starting on page *201*.

Drive parameter		Modbus protocol reference	
		ABB DRV	DCU PROFILE
0102	SPEED	40102	
0103	OUTPUT FREQ	40103	
0104	CURRENT	40104	
0105	TORQUE	40105	
0106	POWER	40106	
0107	DC BUS VOLTAGE	40107	
0109	OUTPUT VOLTAGE	40109	
0301	FB CMD WORD1 – bit 0 (STOP)	40301 bit 0	
0301	FB CMD WORD1 1 – bit 2 (REV)	40301 bit 2	
0118	DI 1-3 STATUS – bit 0 (DI3)	40118	

Note: With Modbus, any parameter can be accessed using the format: "4" followed by the parameter number.

Actual value scaling

The scaling of actual values can be protocol dependent. In general, for Actual Values, scale the feedback integer using the parameter's resolution. (See section *Complete parameter list* on page *85* for parameter resolutions.) For example:

Feedback integer	Parameter resolution	(Feedback integer) · (Parameter resolution) = Scaled value
1	0.1 mA	1 · 0.1 mA = 0.1 mA
10	0.1%	10 · 0.1% = 1%

Where parameters are in percent, the *Complete parameter descriptions* section specifies what parameter corresponds to 100%. In such cases, to convert from percent to engineering units, multiply by the value of the parameter that defines 100% and divide by 100%.

For example:

Feedback integer	Parameter resolution	Value of the parameter that defines 100%	(Feedback integer) · (Parameter resolution) · (Value of 100% ref.) / 100% = Scaled value
10	0.1%	1500 rpm[1]	10 · 0.1% · 1500 RPM / 100% = 15 rpm
100	0.1%	500 Hz[2]	100 · 0.1% · 500 Hz / 100% = 50 Hz

[1] Assuming, for the sake of this example, that the Actual Value uses parameter 9908 MOT NOM SPEED as the 100% reference and that 9908 = 1500 rpm.

[2] Assuming, for the sake of this example, that the Actual Value uses parameter 9907 MOT NOM FREQ as the 100% reference and that 9907 = 500 Hz.

Diagnostics – EFB

Fault queue for drive diagnostics

For general ACS550 diagnostics information, see chapter *Diagnostics* on page *243*. The three most recent ACS550 faults are reported to the fieldbus as defined below.

Drive parameter		Modbus protocol reference	
		ABB DRV	DCU PROFILE
0401	LAST FAULT	40401	
0412	PREVIOUS FAULT 1	40412	
0413	PREVIOUS FAULT 2	40413	

Serial communication diagnostics

Network problems can be caused by multiple sources. Some of these sources are:

- loose connections
- incorrect wiring (including swapped wires)
- bad grounding
- duplicate station numbers
- incorrect setup of drives or other devices on the network.

The major diagnostic features for fault tracing on an EFB network include *Group 53: EFB PROTOCOL* parameters 5306…5309. Section *Complete parameter descriptions* on page *98* describes these parameters in detail.

Diagnostic situations

The sub-sections below describe various diagnostic situations – the problem symptoms and corrective actions.

Normal operation

During normal network operation, 5306…5309 parameter values act as follows at each drive:

- 5306 EFB OK MESSAGES advances (advances for each message properly received and addressed to this drive).
- 5307 EFB CRC ERRORS does not advance at all (advances when an invalid message CRC is received).
- 5308 EFB UART ERRORS does not advance at all (advances when character format errors are detected, such as parity or framing errors).
- 5309 EFB STATUS value varies depending on network traffic.

Loss of communication

The ACS550 behavior, if communication is lost, was configured earlier in section *Communication fault* on page *196*. The parameters are 3018 COMM FAULT FUNC and 3019 COMM FAULT TIME. Section *Complete parameter descriptions* on page *98* describes these parameters in detail.

No master station on line

If no master station is on line: Neither the EFB OK MESSAGES nor the errors (5307 EFB CRC ERRORS and 5308 EFB UART ERRORS) increase on any of the stations.

To correct:

- Check that a network master is connected and properly programmed on the network.
- Verify that the cable is connected and that it is not cut or short circuited.

Duplicate stations

If two or more stations have duplicate numbers:

- Two or more drives cannot be addressed.
- Every time there is a read or write to one particular station, the value for 5307 EFB CRC ERRORS or 5308 EFB UART ERRORS advances.

To correct: Verify the station numbers of all stations. Change conflicting station numbers.

Swapped wires

If the communication wires are swapped (terminal A on one drive is connected to terminal B on another):

- The value of 5306 EFB OK MESSAGES does not advance.
- The values of 5307 EFB CRC ERRORS and 5308 EFB UART ERRORS are advancing.

To correct: Check that the RS-485 lines are not swapped.

Fault 28 – Serial 1 Err

If the drive's control panel shows fault code 28, SERIAL 1 ERR, check for either of the following:

- The master system is down. To correct, resolve problem with master system.
- The communication connection is bad. To correct, check communication connection at the drive.
- The time-out selection for the drive is too short for the given installation. The master is not polling the drive within the specified time-out delay. To correct, increase the time set by parameter 3019 COMM FAULT TIME.

Faults 31…33 – EFB1…EFB3

The three EFB fault codes listed for the drive in chapter *Diagnostics* on page *243* (fault codes 31…33) are not used.

Intermittent off-line occurrences

The problems described above are the most common problems encountered with ACS550 serial communication. Intermittent problems might also be caused by:

- marginally loose connections
- wear on wires caused by equipment vibrations
- insufficient grounding and shielding on both the devices and on the communication cables.

Modbus protocol technical data

Overview

The Modbus® protocol was introduced by Modicon, Inc. for use in control environments featuring Modicon programmable controllers. Due to its ease of use and implementation, this common PLC language was quickly adopted as a de-facto standard for integration of a wide variety of master controllers and slave devices.

Modbus is a serial, asynchronous protocol. Transactions are half-duplex, featuring a single Master controlling one or more Slaves. While RS232 can be used for point-to-point communication between a single Master and a single Slave, a more common implementation features a multi-drop RS485 network with a single Master controlling multiple Slaves. The ACS550 features RS485 for its Modbus physical interface.

RTU

The Modbus specification defines two distinct transmission modes: ASCII and RTU. The ACS550 supports RTU only.

Feature summary

The following Modbus function codes are supported by the ACS550.

Function	Code (Hex)	Description
Read Coil Status	0x01	Read discrete output status. For the ACS550, the individual bits of the control word are mapped to Coils 1…16. Relay outputs are mapped sequentially beginning with Coil 33 (e.g. RO1=Coil 33).
Read Discrete Input Status	0x02	Read discrete inputs status. For the ACS550, the individual bits of the status word are mapped to Inputs 1…16 or 1…32, depending on the active profile. Terminal inputs are mapped sequentially beginning with Input 33 (e.g. DI1=Input 33).
Read Multiple Holding Registers	0x03	Read multiple holding registers. For the ACS550, the entire parameter set is mapped as holding registers, as well as command, status and reference values.
Read Multiple Input Registers	0x04	Read multiple input registers. For the ACS550, the 2 analog input channels are mapped as input registers 1 & 2.
Force Single Coil	0x05	Write a single discrete output. For the ACS550, the individual bits of the control word are mapped to Coils 1…16. Relay outputs are mapped sequentially beginning with Coil 33 (e.g. RO1=Coil 33).
Write Single Holding Register	0x06	Write single holding register. For the ACS550, the entire parameter set is mapped as holding registers, as well as command, status and reference values.
Diagnostics	0x08	Perform Modbus diagnostics. Subcodes for Query (0x00), Restart (0x01) & Listen Only (0x04) are supported.
Force Multiple Coils	0x0F	Write multiple discrete outputs. For the ACS550, the individual bits of the control word are mapped to Coils 1…16. Relay outputs are mapped sequentially beginning with Coil 33 (e.g. RO1=Coil 33).
Write Multiple Holding Registers	0x10	Write multiple holding registers. For the ACS550, the entire parameter set is mapped as holding registers, as well as command, status and reference values.
Read/Write Multiple Holding Registers	0x17	This function combines functions 0x03 and 0x10 into a single command.

Mapping summary

The following table summarizes the mapping between the ACS550 (parameters and I/0) and Modbus reference space. For details, see *Modbus addressing* below.

ACS550	Modbus reference	Supported function codes
• Control Bits • Relay Outputs	Coils(0xxxx)	• 01 – Read Coil Status • 05 – Force Single Coil • 15 – Force Multiple Coils
• Status Bits • Discrete Inputs	Discrete Inputs(1xxxx)	• 02 – Read Input Status
• Analog Inputs	Input Registers(3xxxxx)	• 04 – Read Input Registers
• Parameters • Control/Status Words • References	Holding Registers(4xxxx)	• 03 – Read 4X Registers • 06 – Preset Single 4X Register • 16 – Preset Multiple 4X Registers • 23 – Read/Write 4X Registers

Communication profiles

When communicating by Modbus, the ACS550 supports multiple profiles for control and status information. Parameter 5305 EFB CTRL PROFILE selects the profile used.

- ABB DRV LIM – The primary (and default) profile is the ABB DRV LIM profile. This implementation of the ABB Drives profile standardizes the control interface with ACS400 drives. The ABB Drives profile is based on the PROFIBUS interface. It is discussed in detail in the following sections.
- DCU PROFILE – The DCU PROFILE profile extends the control and status interface to 32 bits. It is the internal interface between the main drive application and the embedded fieldbus environment.
- ABB DRV FULL – ABB DRV FULL is the implementation of the ABB Drives profile that standardizes the control interface with ACS600 and ACS800 drives. This implementation supports two control word bits not supported by the ABB DRV LIM implementation.

Modbus addressing

With Modbus, each function code implies access to a specific Modbus reference set. Thus, the leading digit is not included in the address field of a Modbus message.

Note: The ACS550 supports the zero-based addressing of the Modbus specification. Holding register 40002 is addressed as 0001 in a Modbus message. Similarly, coil 33 is addressed as 0032 in a Modbus message.

Refer again to the *Mapping summary* above. The following sections describe, in detail, the mapping to each Modbus reference set.

0xxxx Mapping – Modbus coils. The drive maps the following information to the 0xxxx Modbus set called Modbus Coils:

- bit-wise map of the CONTROL WORD (selected using parameter 5305 EFB CTRL PROFILE). The first 32 coils are reserved for this purpose.

- relay output states, numbered sequentially beginning with coil 00033.

The following table summarizes the 0xxxx reference set:

Modbus ref.	**Internal location (all profiles)**	ABB DRV LIM **(5305 = 0)**	DCU PROFILE **(5305 = 1)**	ABB DRV FULL **(5305 = 2)**
00001	CONTROL WORD – Bit 0	OFF1[1]	STOP	OFF1[1]
00002	CONTROL WORD – Bit 1	OFF2[1]	START	OFF2[1]
00003	CONTROL WORD – Bit 2	OFF3[1]	REVERSE	OFF3[1]
00004	CONTROL WORD – Bit 3	START	LOCAL	START
00005	CONTROL WORD – Bit 4	N/A	RESET	RAMP_OUT_ZERO[1]
00006	CONTROL WORD – Bit 5	RAMP_HOLD[1]	EXT2	RAMP_HOLD[1]
00007	CONTROL WORD – Bit 6	RAMP_IN_ZERO[1]	RUN_DISABLE	RAMP_IN_ZERO[1]
00008	CONTROL WORD – Bit 7	RESET	STPMODE_R	RESET
00009	CONTROL WORD – Bit 8	N/A	STPMODE_EM	N/A
00010	CONTROL WORD – Bit 9	N/A	STPMODE_C	N/A
00011	CONTROL WORD – Bit 10	N/A	RAMP_2	REMOTE_CMD[1]
00012	CONTROL WORD – Bit 11	EXT2	RAMP_OUT_0	EXT2
00013	CONTROL WORD – Bit 12	N/A	RAMP_HOLD	N/A
00014	CONTROL WORD – Bit 13	N/A	RAMP_IN_0	N/A
00015	CONTROL WORD – Bit 14	N/A	REQ_LOCALLOCK	N/A
00016	CONTROL WORD – Bit 15	N/A	TORQLIM2	N/A
00017	CONTROL WORD – Bit 16	Does not apply	FBLOCAL_CTL	Does not apply
00018	CONTROL WORD – Bit 17		FBLOCAL_REF	
00019	CONTROL WORD – Bit 18		START_DISABLE1	
00020	CONTROL WORD – Bit 19		START_DISABLE2	
00021… **0**0032	Reserved	Reserved	Reserved	Reserved
00033	RELAY OUTPUT 1	Relay Output 1	Relay Output 1	Relay Output 1
00034	RELAY OUTPUT 2	Relay Output 2	Relay Output 2	Relay Output 2
00035	RELAY OUTPUT 3	Relay Output 3	Relay Output 3	Relay Output 3
00036	RELAY OUTPUT 4	Relay Output 4	Relay Output 4	Relay Output 4
00037	RELAY OUTPUT 5	Relay Output 5	Relay Output 5	Relay Output 5
00038	RELAY OUTPUT 6	Relay Output 6	Relay Output 6	Relay Output 6

[1] = Active low

For the 0xxxx registers:

- Status is always readable.
- Forcing is allowed by user configuration of the drive for fieldbus control.
- Additional relay outputs are added sequentially.

The ACS550 supports the following Modbus function codes for coils:

Function code	Description
01	Read coil status
05	Force single coil
15 (0x0F Hex)	Force multiple coils

1xxxx Mapping – Modbus discrete inputs. The drive maps the following information to the 1xxxx Modbus set called Modbus Discrete Inputs:

- bit-wise map of the STATUS WORD (selected using parameter 5305 EFB CTRL PROFILE). The first 32 inputs are reserved for this purpose.
- discrete hardware inputs, numbered sequentially beginning with input 33.

The following table summarizes the 1xxxx reference set:

Modbus ref.	Internal location (all profiles)	ABB DRV (5305 = 0 OR 2)	DCU PROFILE (5305 = 1)
10001	STATUS WORD – Bit 0	RDY_ON	READY
10002	STATUS WORD – Bit 1	RDY_RUN	ENABLED
10003	STATUS WORD – Bit 2	RDY_REF	STARTED
10004	STATUS WORD – Bit 3	TRIPPED	RUNNING
10005	STATUS WORD – Bit 4	OFF_2_STA[1]	ZERO_SPEED
10006	STATUS WORD – Bit 5	OFF_3_STA[1]	ACCELERATE
10007	STATUS WORD – Bit 6	SWC_ON_INHIB	DECELERATE
10008	STATUS WORD – Bit 7	ALARM	AT_SETPOINT
10009	STATUS WORD – Bit 8	AT_SETPOINT	LIMIT
10010	STATUS WORD – Bit 9	REMOTE	SUPERVISION
10011	STATUS WORD – Bit 10	ABOVE_LIMIT	REV_REF
10012	STATUS WORD – Bit 11	EXT2	REV_ACT
10013	STATUS WORD – Bit 12	RUN_ENABLE	PANEL_LOCAL
10014	STATUS WORD – Bit 13	N/A	FIELDBUS_LOCAL
10015	STATUS WORD – Bit 14	N/A	EXT2_ACT
10016	STATUS WORD – Bit 15	N/A	FAULT
10017	STATUS WORD – Bit 16	Reserved	ALARM
10018	STATUS WORD – Bit 17	Reserved	REQ_MAINT
10019	STATUS WORD – Bit 18	Reserved	DIRLOCK
10020	STATUS WORD – Bit 19	Reserved	LOCALLOCK
10021	STATUS WORD – Bit 20	Reserved	CTL_MODE
10022	STATUS WORD – Bit 21	Reserved	Reserved
10023	STATUS WORD – Bit 22	Reserved	Reserved
10024	STATUS WORD – Bit 23	Reserved	Reserved
10025	STATUS WORD – Bit 24	Reserved	Reserved
10026	STATUS WORD – Bit 25	Reserved	Reserved
10027	STATUS WORD – Bit 26	Reserved	REQ_CTL

Modbus ref.	Internal location (all profiles)	ABB DRV (5305 = 0 OR 2)	DCU PROFILE (5305 = 1)
10028	STATUS WORD – Bit 27	Reserved	REQ_REF1
10029	STATUS WORD – Bit 28	Reserved	REQ_REF2
10030	STATUS WORD – Bit 29	Reserved	REQ_REF2EXT
10031	STATUS WORD – Bit 30	Reserved	ACK_STARTINH
10032	STATUS WORD – Bit 31	Reserved	ACK_OFF_ILCK
10033	DI1	DI1	DI1
10034	DI2	DI2	DI2
10035	DI3	DI3	DI3
10036	DI4	DI4	DI4
10037	DI5	DI5	DI5
10038	DI6	DI6	DI6

[1] = Active low

For the 1xxxx registers:

- Additional discrete inputs are added sequentially.

The ACS550 supports the following Modbus function codes for discrete inputs:

Function code	Description
02	Read input status

3xxxx Mapping – Modbus inputs. The drive maps the following information to the 3xxxx Modbus addresses called Modbus input registers:

- any user defined analog inputs.

The following table summarizes the input registers:

Modbus reference	ACS550 all profiles	Remarks
30001	AI1	This register shall report the level of Analog Input 1 (0…100%).
30002	AI2	This register shall report the level of Analog Input 2 (0…100%).

The ACS550 supports the following Modbus function codes for 3xxxx registers:

Function code	Description
04	Read 3xxxx input status

4xxxx Register mapping. The drive maps its parameters and other data to the 4xxxx holding registers as follows:

- 40001…40099 map to drive control and actual values. These registers are described in the table below.
- 40101…49999 map to drive parameters 0101…9999. Register addresses that do not correspond to drive parameters are invalid. If there is an attempt to read or write outside the parameter addresses, the Modbus interface returns an exception code to the controller.

The following table summarizes the 4xxxx drive control registers 40001…40099 (for 4xxxx registers above 40099, see the drive parameter list, e.g. 40102 is parameter 0102):

Modbus register		Access	Remarks
40001	CONTROL WORD	R/W	Maps directly to the profile'S CONTROL WORD. Supported only if 5305 = 0 or 2 (ABB Drives profile). Parameter 5319 holds a copy in hex format.
40002	Reference 1	R/W	Range = 0…+20000 (scaled to 0…1105 REF1 MAX), or -20000…0 (scaled to 1105 REF1 MAX…0).
40003	Reference 2	R/W	Range = 0…+10000 (scaled to 0…1108 REF2 MAX), or -10000…0 (scaled to 1108 REF2 MAX…0).
40004	STATUS WORD	R	Maps directly to the profile'S STATUS WORD. Supported only if 5305 = 0 or 2 (ABB Drives profile). Parameter 5320 holds a copy in hex format.
40005	Actual 1 (select using 5310)	R	By default, stores a copy of 0103 OUTPUT FREQ. Use parameter 5310 to select a different actual value for this register.
40006	Actual 2 (select using 5311)	R	By default, stores a copy of 0104 CURRENT. Use parameter 5311 to select a different actual value for this register.
40007	Actual 3 (select using 5312)	R	By default, stores nothing. Use parameter 5312 to select an actual value for this register.
40008	Actual 4 (select using 5313)	R	By default, stores nothing. Use parameter 5313 to select an actual value for this register.
40009	Actual 5 (select using 5314)	R	By default, stores nothing. Use parameter 5314 to select an actual value for this register.
40010	Actual 6 (select using 5315)	R	By default, stores nothing. Use parameter 5315 to select an actual value for this register.
40011	Actual 7 (select using 5316)	R	By default, stores nothing. Use parameter 5316 to select an actual value for this register.
40012	Actual 8 (select using 5317)	R	By default, stores nothing. Use parameter 5317 to select an actual value for this register.
40031	ACS550 CONTROL WORD LSW	R/W	Maps directly to the Least Significant Word of the DCU profile's CONTROL WORD. Supported only if 5305 = 1. See parameter 0301.
40032	ACS550 CONTROL WORD MSW	R	Maps directly to the Most Significant Word of the DCU profile's CONTROL WORD. Supported only if 5305 = 1. See parameter 0302.
40033	ACS550 STATUS WORD LSW	R	Maps directly to the Least Significant Word of the DCU profile's STATUS WORD. Supported only if 5305 = 1. See parameter 0303.
40034	ACS550 STATUS WORD MSW	R	Maps directly to the Most Significant Word of the DCU profile's STATUS WORD. Supported only if 5305 = 1. See parameter 0304.

For the Modbus protocol, drive parameters in *Group 53: EFB PROTOCOL* report the parameter mapping to 4xxxx Registers.

Code	Description
5310	EFB PAR 10 Specifies the parameter mapped to Modbus register 40005.
5311	EFB PAR 11 Specifies the parameter mapped to Modbus register 40006.
5312	EFB PAR 12 Specifies the parameter mapped to Modbus register 40007.
5313	EFB PAR 13 Specifies the parameter mapped to Modbus register 40008.
5314	EFB PAR 14 Specifies the parameter mapped to Modbus register 40009.
5315	EFB PAR 15 Specifies the parameter mapped to Modbus register 40010.
5316	EFB PAR 16 Specifies the parameter mapped to Modbus register 40011.
5317	EFB PAR 17 Specifies the parameter mapped to Modbus register 40012.
5318	EFB PAR 18 Sets additional delay in milliseconds before the ACS550 begins transmitting response to the master request.
5319	EFB PAR 19 Holds a copy (in hex) of the CONTROL WORD, Modbus register 40001.
5320	EFB PAR 20 Holds a copy (in hex) of the STATUS WORD, Modbus register 40004.

Except where restricted by the drive, all parameters are available for both reading and writing. The parameter writes are verified for the correct value and for a valid register addresses.

Note: Parameter writes through standard Modbus are always volatile i.e. modified values are not automatically stored to permanent memory. Use parameter 1607 PARAM SAVE to save all altered values.

The ACS550 supports the following Modbus function codes for 4xxxx registers:

Function code	Description
03	Read holding 4xxxx registers
06	Preset single 4xxxx register
16 (0x10 Hex)	Preset multiple 4xxxx registers
23 (0x17 Hex)	Read/write 4xxxx registers

Actual values

The contents of the register addresses 40005…40012 are ACTUAL VALUES and are:

- specified using parameters 5310…5317
- Read-only values containing information on the operation of the drive
- 16-bit words containing a sign bit and a 15-bit integer
- when negative values, written as the two's complement of the corresponding positive value
- scaled as described earlier in section *Actual value scaling* on page *197*.

Exception codes

Exception codes are serial communication responses from the drive. The ACS550 supports the standard Modbus exception codes defined below.

Exception code	Name	Meaning
01	ILLEGAL FUNCTION	Unsupported Command
02	ILLEGAL DATA ADDRESS	The data address received in the query is not allowable. It is not a defined parameter/group.
03	ILLEGAL DATA VALUE	A value contained in the query data field is not an allowable value for the ACS550, because it is one of the following: • Outside min. or max. limits. • Parameter is read-only. • Message is too long. • Parameter write not allowed when start is active. • Parameter write not allowed when factory macro is selected.

ABB control profiles technical data

Overview

ABB Drives profile

The ABB Drives profile provides a standard profile that can be used on multiple protocols, including Modbus and the protocols available on the FBA module. Two implementations of the ABB Drives profile are available:

- ABB DRV FULL – This implementation standardizes the control interface with ACS600 and ACS800 drives.
- ABB DRV LIM – This implementation standardizes the control interface with ACS400 drives. This implementation does not support two control word bits supported by ABB DRV FULL.

Except as noted, the following "ABB Drives Profile" descriptions apply to both implementations.

DCU profile

The DCU profile extends the control and status interface to 32 bits. It is the internal interface between the main drive application and the embedded fieldbus environment.

Control Word

The CONTROL WORD is the principal means for controlling the drive from a fieldbus system. The fieldbus master station sends the CONTROL WORD to the drive. The drive switches between states according to the bit-coded instructions in the CONTROL WORD. Using the CONTROL WORD requires that:

- The drive is in remote (REM) control.
- The serial communication channel is defined as the source for controlling commands (set using parameters such as 1001 EXT1 COMMANDS, 1002 EXT2 COMMANDS and 1102 EXT1/EXT2 SEL).
- The serial communication channel used is configured to use an ABB control profile. For example, to use the control profile ABB DRV FULL requires both parameter 9802 COMM PROT SEL = 1 (STD MODBUS) and parameter 5305 EFB CTRL PROFILE = 2 (ABB DRV FULL).

ABB Drives profile

The following table and the state diagram later in this sub-section describe the CONTROL WORD content for the ABB Drives profile.

ABB Drives profile CONTROL WORD (See parameter 5319)				
Bit	**Name**	**Value**	**Commanded state**	**Comments**
0	OFF1 CONTROL	1	READY TO OPERATE	Enter READY TO OPERATE
		0	EMERGENCY OFF	Drive ramps to stop according to currently active deceleration ramp (2203 or 2205) Normal command sequence: • Enter OFF1 ACTIVE • Proceed to READY TO SWITCH ON, unless other interlocks (OFF2, OFF3) are active.
1	OFF2 CONTROL	1	OPERATING	Continue operation (OFF2 inactive)
		0	EMERGENCY OFF	Drive coasts to stop. Normal command sequence: • Enter OFF2 ACTIVE • Proceed to SWITCHON INHIBITED
2	OFF3 CONTROL	1	OPERATING	Continue operation (OFF3 inactive)
		0	EMERGENCY STOP	Drive stops within time specified by parameter 2208. Normal command sequence: • Enter OFF3 ACTIVE • Proceed to SWITCH ON INHIBITED ⚠ **WARNING!** Be sure motor and driven equipment can be stopped using this mode.
3	INHIBIT OPERATION	1	OPERATION ENABLED	Enter OPERATION ENABLED (Note the Run enable signal must be active. See 1601. If 1601 is set to COMM, this bit also actives the Run Enable signal.)
		0	OPERATION INHIBITED	Inhibit operation. Enter OPERATION INHIBITED
4	Unused (**ABB DRV LIM**)			
	RAMP_OUT_ ZERO (**ABB DRV FULL**)	1	NORMAL OPERATION	Enter RAMP FUNCTION GENERATOR: ACCELERATION ENABLED
		0	RFG OUT ZERO	Force ramp function generator output to Zero. Drive ramps to stop (current and DC voltage limits in force).
5	RAMP_HOLD	1	RFG OUT ENABLED	Enable ramp function. Enter RAMP FUNCTION GENERATOR: ACCELERATOR ENABLED
		0	RFG OUT HOLD	Halt ramping (Ramp Function Generator output held)
6	RAMP_IN_ ZERO	1	RFG INPUT ENABLED	Normal operation. Enter OPERATING
		0	RFG INPUT ZERO	Force Ramp Function Generator input to zero.

ABB Drives profile CONTROL WORD (See parameter 5319)				
Bit	**Name**	**Value**	**Commanded state**	**Comments**
7	RESET	0=>1	RESET	Fault reset if an active fault exists (Enter SWITCH-ON INHIBITED). Effective if 1604 = COMM.
		0	OPERATING	Continue normal operation
8…9	Unused			
10	Unused (ABB DRV LIM)			
	REMOTE_CMD (ABB DRV FULL)	1		Fieldbus control enabled.
		0		• CW ≠ 0 or Ref ≠ 0: Retain last CW and Ref. • CW = 0 and Ref = 0: Fieldbus control enabled. • Ref and deceleration/acceleration ramp are locked.
11	EXT CTRL LOC	1	EXT2 SELECT	Select external control location 2 (EXT2). Effective if 1102 = COMM.
		0	EXT1 SELECT	Select external control location 1 (EXT1). Effective if 1102 = COMM.
12…15	Unused			

DCU Profile

The following tables describe the CONTROL WORD content for the DCU profile.

DCU profile CONTROL WORD (See parameter 0301)				
Bit	**Name**	**Value**	**Command/Req.**	**Comments**
0	STOP	1	Stop	Stops according to either the stop mode parameter or the stop mode requests (bits 7 and 8).
		0	(no op)	
1	START	1	Start	Simultaneous STOP and START commands result in a stop command.
		0	(no op)	
2	REVERSE	1	Reverse direction	This bit XOR'd with the sign of the reference defines direction.
		0	Forward direction	
3	LOCAL	1	Local mode	When the fieldbus sets this bit, it steals control and the drive moves to fieldbus local control mode.
		0	External mode	
4	RESET	-> 1	Reset	Edge sensitive.
		other	(no op)	
5	EXT2	1	Switch to EXT2	
		0	Switch to EXT1	
6	RUN_DISABLE	1	Run disable	Inverted run enable.
		0	Run enable on	
7	STPMODE_R	1	Normal ramp stop mode	
		0	(no op)	

DCU profile CONTROL WORD (See parameter 0301)				
Bit	**Name**	**Value**	**Command/Req.**	**Comments**
8	STPMODE_EM	1	Emergency ramp stop mode	
		0	(no op)	
9	STPMODE_C	1	Coast stop mode	
		0	(no op)	
10	RAMP_2	1	Ramp pair 2	
		0	Ramp pair 1	
11	RAMP_OUT_0	1	Ramp output to 0	
		0	(no op)	
12	RAMP_HOLD	1	Ramp freeze	
		0	(no op)	
13	RAMP_IN_0	1	Ramp input to 0	
		0	(no op)	
14	RREQ_LOCALLOC	1	Local mode lock	In lock, drive will not switch to local mode.
		0	(no op)	
15	TORQLIM2	1	Torque limit pair 2	
		0	Torque limit pair 1	

DCU profile CONTROL WORD (See parameter 0302)				
Bit	**Name**	**Value**	**Function**	**Comments**
16…26	Reserved			
27	REF_CONST	1	Constant speed ref.	These bits are only for supervision purposes.
		0	(no op)	
28	REF_AVE	1	Average speed ref.	
		0	(no op)	
29	LINK_ON	1	Master is detected in link	
		0	Link is down	
30	REQ_STARTINH	1	Start inhibit request is pending	
		0	Start inhibit request is OFF	
31	OFF_INTERLOCK	1	Panel OFF button pressed	For the control panel (or PC tool) this is the OFF button interlock.
		0	(no op)	

Status Word

The contents of the STATUS WORD is status information, sent by the drive to the master station.

ABB Drives profile

The following table and the state diagram later in this sub-section describe the STATUS WORD content for the ABB Drives profile.

ABB Drives profile (EFB) STATUS WORD (See parameter 5320)			
Bit	**Name**	**Value**	**Description (Correspond to states/boxes in the state diagram)**
0	RDY_ON	1	READY TO SWITCH ON
		0	NOT READY TO SWITCH ON
1	RDY_RUN	1	READY TO OPERATE
		0	OFF1 ACTIVE
2	RDY_REF	1	OPERATION ENABLED
		0	OPERATION INHIBITED
3	TRIPPED	0…1	FAULT
		0	No fault
4	OFF_2_STA	1	OFF2 INACTIVE
		0	**OFF2 ACTIVE**
5	OFF_3_STA	1	OFF3 INACTIVE
		0	**OFF3 ACTIVE**
6	SWC_ON_INHIB	1	SWITCH-ON INHIBIT ACTIVE
		0	SWITCH-ON INHIBIT NOT ACTIVE
7	ALARM	1	Alarm (See section *Alarm listing* on page *250* for details on alarms.)
		0	No alarm
8	AT_SETPOINT	1	OPERATING. Actual value equals (within tolerance limits) the reference value.
		0	Actual value is outside tolerance limits (not equal to reference value).
9	REMOTE	1	Drive control location: REMOTE (EXT1 or EXT2)
		0	Drive control location: LOCAL
10	ABOVE_LIMIT	1	Supervised parameter's value ≥ supervision high limit. Bit remains "1" until supervised parameter's value < supervision low limit. See *Group 32: SUPERVISION*.
		0	Supervised parameter's value < supervision low limit. Bit remains "0" until supervised parameter's value > supervision high limit. See *Group 32: SUPERVISION*.
11	EXT CTRL LOC	1	External control location 2 (EXT2) selected
		0	External control location 1 (EXT1) selected
12	EXT RUN ENABLE	1	External Run Enable signal received
		0	No External Run Enable signal received
13… 15	Unused		

DCU profile

The following tables describe the STATUS WORD content for the DCU profile.

DCU profile STATUS WORD (See parameter 0303)			
Bit	**Name**	**Value**	**Status**
0	READY	1	Drive is ready to receive start command.
		0	Drive is not ready.
1	ENABLED	1	External run enable signal received.
		0	No external run enable signal received.
2	STARTED	1	Drive has received start command.
		0	Drive has not received start command.
3	RUNNING	1	Drive is modulating.
		0	Drive is not modulating.
4	ZERO_SPEED	1	Drive is at zero speed.
		0	Drive has not reached zero speed.
5	ACCELERATE	1	Drive is accelerating.
		0	Drive is not accelerating.
6	DECELERATE	1	Drive is decelerating.
		0	Drive is not decelerating.
7	AT_SETPOINT	1	Drive is at setpoint.
		0	Drive has not reached setpoint.
8	LIMIT	1	Operation is limited by *Group 20: LIMITS* settings.
		0	Operation is within *Group 20: LIMITS* settings.
9	SUPERVISION	1	A supervised parameter (*Group 32: SUPERVISION*) is outside its limits.
		0	All supervised parameters are within limits.
10	REV_REF	1	Drive reference is in reverse direction.
		0	Drive reference is in forward direction.
11	REV_ACT	1	Drive is running in reverse direction.
		0	Drive is running in forward direction.
12	PANEL_LOCAL	1	Control is in control panel (or PC tool) local mode.
		0	Control is not in control panel local mode.
13	FIELDBUS_LOCAL	1	Control is in fieldbus local mode (steals control panel local).
		0	Control is not in fieldbus local mode.
14	EXT2_ACT	1	Control is in EXT2 mode.
		0	Control is in EXT1 mode.
15	FAULT	1	Drive is in a fault state.
		0	Drive is not in a fault state.

DCU profile STATUS WORD (See parameter 0304)			
Bit	**Name**	**Value**	**Status**
16	ALARM	1	An alarm is on.
		0	No alarms are on.
17	REQ_MAINT	1	A maintenance request is pending.
		0	No maintenance request is pending.
18	DIRLOCK	1	Direction lock is ON. (Direction change is locked out.)
		0	Direction lock is OFF.
19	LOCALLOCK	1	Local mode lock is ON. (Local mode is locked out.)
		0	Local mode lock is OFF.
20	CTL_MODE	1	Drive is in vector control mode.
		0	Drive is in scalar control mode.
21…25	Reserved		
26	REQ_CTL	1	Copy the control word
		0	(no op)
27	REQ_REF1	1	Reference 1 requested in this channel.
		0	Reference 1 is not requested in this channel.
28	REQ_REF2	1	Reference 2 requested in this channel.
		0	Reference 2 is not requested in this channel.
29	REQ_REF2EXT	1	External PID reference 2 requested in this channel.
		0	External PID reference 2 is not requested in this channel.
30	ACK_STARTINH	1	A start inhibit from this channel is granted.
		0	A start inhibit from this channel is not granted.
31	ACK_OFF_ILCK	1	Start inhibit due to OFF button
		0	Normal operation

State diagram

ABB Drives profile

To illustrate the operation of the state diagram, the following example (ABB DRV LIM implementation of the ABB Drives profile) uses the control word to start the drive:

- First, the requirements for using the CONTROL WORD must be met. See above.
- When the power is first connected, the state of the drive is not ready to switch on. See dotted lined path (▪▪▪) in the state diagram below.
- Use the CONTROL WORD to step through the state machine states until the OPERATING state is reached, meaning that the drive is running and follows the given reference. See the table below.

Step	CONTROL WORD **Value**	Description
1	CW = 0000 0000 0000 0110 bit 15 bit 0	This CW value changes the drive state to READY TO SWITCH ON.
2		Wait at least 100 ms before proceeding.
3	CW = 0000 0000 0000 0111	This CW value changes the drive state to READY TO OPERATE.
4	CW = 0000 0000 0000 1111	This CW value changes the drive state to OPERATION ENABLED. The drive starts, but will not accelerate.
5	CW = 0000 0000 0010 1111	This CW value releases the ramp function generator (RFG) output and changes the drive state to RFG: ACCELERATOR ENABLED.
6	CW = 0000 0000 0110 1111	This CW value releases the ramp function generator (RFG) output and changes the drive state to OPERATING. The drive accelerates to the given reference and follows the reference.

The state diagram below describes the start-stop function of CONTROL WORD (CW) and STATUS WORD (SW) bits for the ABB Drives profile.

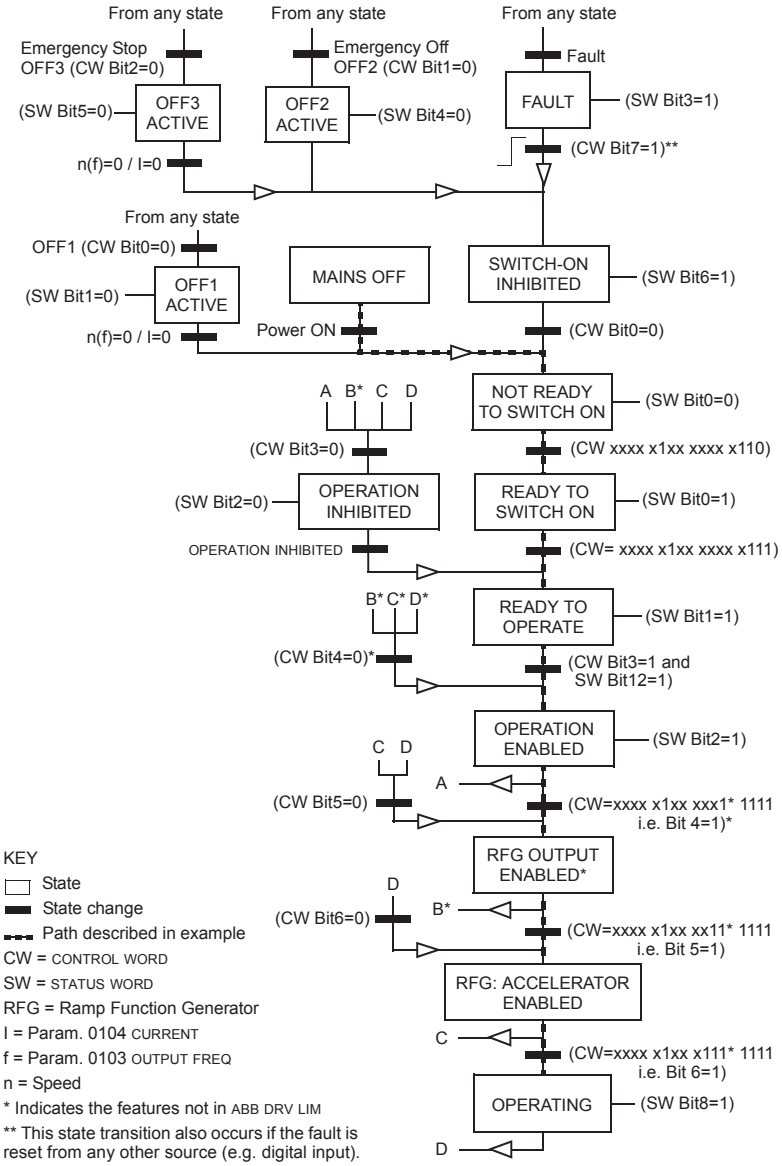

Reference scaling

ABB Drives and DCU profiles

The following table describes REFERENCE scaling for the ABB Drives and DCU profiles.

ABB Drives and DCU profiles				
Reference	**Range**	**Reference type**	**Scaling**	**Remarks**
REF1	-32767 … +32767	Speed or frequency	-20000 = -**(par. 1105)** 0 = 0 +20000 = **(par. 1105)** (20000 corresponds to 100%)	Final reference limited by 1104/1105. Actual motor speed limited by 2001/2002 (speed) or 2007/2008 (frequency).
REF2	-32767 … +32767	Speed or frequency	-10000 = -**(par. 1108)** 0 = 0 +10000 = **(par. 1108)** (10000 corresponds to 100%)	Final reference limited by 1107/1108. Actual motor speed limited by 2001/2002 (speed) or 2007/2008 (frequency).
		Torque	-10000 = -**(par. 1108)** 0 = 0 +10000 = **(par. 1108)** (10000 corresponds to 100%)	Final reference limited by 2015/2017 (torque1) or 2016/2018 (torque2).
		PID Reference	-10000 = -**(par. 1108)** 0 = 0 +10000 = **(par. 1108)** (10000 corresponds to 100%)	Final reference limited by 4012/4013 (PID set1) or 4112/4113 (PID set2).

Note: The setting of parameter 1104 REF1 MIN and 1107 REF2 MIN has no effect on the scaling of references.

When parameter 1103 REF1 SELECT or 1106 REF2 SELECT is set to COMM+AI1 or COMM*AI1, the reference is scaled as follows:

ABB Drives and DCU profiles		
Reference	**Value setting**	**AI reference scaling**
REF1	COMM+AI1	COMM (%) +(AI (%) - 0.5 · REF1 MAX (%)) 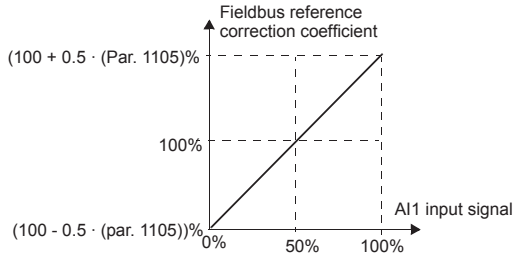

ABB Drives and DCU profiles		
Reference	**Value setting**	**AI reference scaling**
REF1	COMM*AI1	COMM (%) · (AI (%) / 0.5 · REF1 MAX (%)) 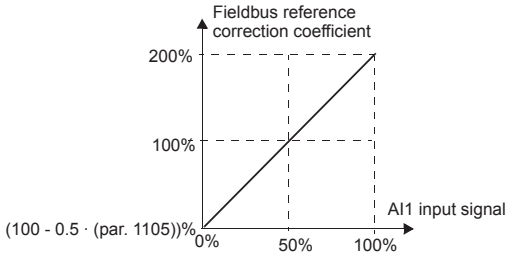
REF2	COMM+AI1	COMM (%) + (AI (%) - 0.5 · REF2 MAX (%)) 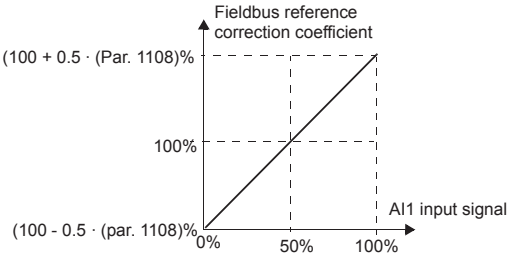
REF2	COMM*AI1	COMM (%) · (AI (%) / 0.5 · REF2 MAX (%)) 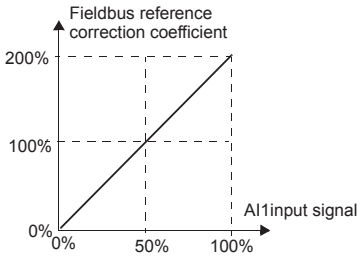

Reference handling

Use *Group 10: START/STOP/DIR* parameters to configure for control of rotation direction for each control location (EXT1 and EXT2). The following diagrams illustrate how group 10 parameters and the sign of the fieldbus reference interact to produce REFERENCE values (REF1 and REF2). Note, fieldbus references are bipolar, that is they can be positive or negative.

ABB Drives profile		
Parameter	**Value setting**	**AI reference scaling**
1003 DIRECTION	1 (FORWARD)	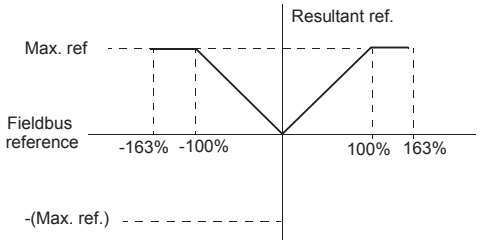
1003 DIRECTION	2 (REVERSE)	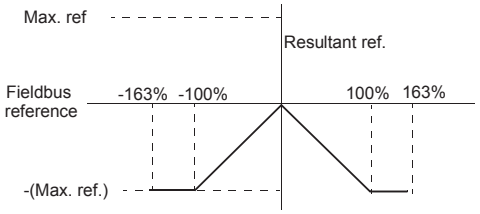
1003 DIRECTION	3 (REQUEST)	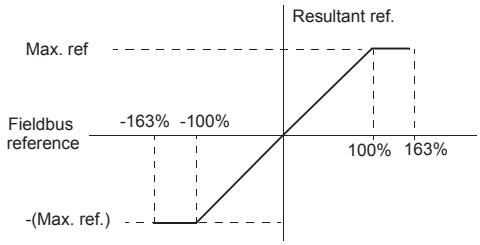

Fieldbus adapter

Overview

The ACS550 can be set up to accept control from an external system using standard serial communication protocols. When using serial communication, the ACS550 can either:

- receive all of its control information from the fieldbus, or
- be controlled from some combination of fieldbus control and other available control locations, such as digital or analog inputs and the control panel.

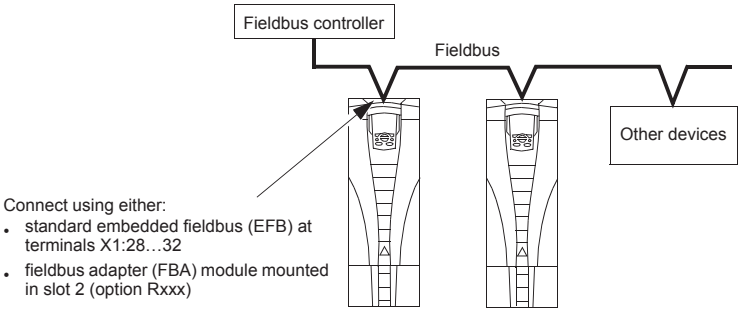

Two basic serial communications configurations are available:

- embedded fieldbus (EFB) – See chapter *Embedded fieldbus* on page *189*.
- fieldbus adapter (FBA) – With one of the optional FBA modules in the drive's expansion slot 2, the drive can communicate to a control system using one of the following protocols:
  - Profibus-DP®
  - LonWorks®
  - CANopen®
  - DeviceNet®
  - ControlNet®.

The ACS550 detects automatically which communication protocol is used by the plug-in fieldbus adapter. The default settings for each protocol assume that the profile used is the protocol's industry-standard drive profile (e.g. PROFIdrive for PROFIBUS, AC/DC Drive for DeviceNet). All of the FBA protocols can also be configured for the ABB Drives profile.

Configuration details depend on the protocol and profile used.These details are provided in a user's manual supplied with the FBA module.

Details for the ABB Drives profile (which apply for all protocols) are provided in section *ABB Drives profile technical data* on page *232*.

Control interface

In general, the basic control interface between the fieldbus system and the drive consists of:

- Output Words:
  - CONTROL WORD
  - REFERENCE (speed or frequency)
  - Others: The drive supports a maximum of 15 output words. Protocols limits may further restrict the total.
- Input Words:
  - STATUS WORD
  - Actual Value (speed or frequency)
  - Others: The drive supports a maximum of 15 input words. Protocols limits may further restrict the total.

Note: The words "output" and "input" are used as seen from the fieldbus controller point of view. For example an output describes data flow from the fieldbus controller to the drive and appears as an input from the drive point of view.

The meanings of the controller interface words are not restricted by the ACS550. However, the profile used may set particular meanings.

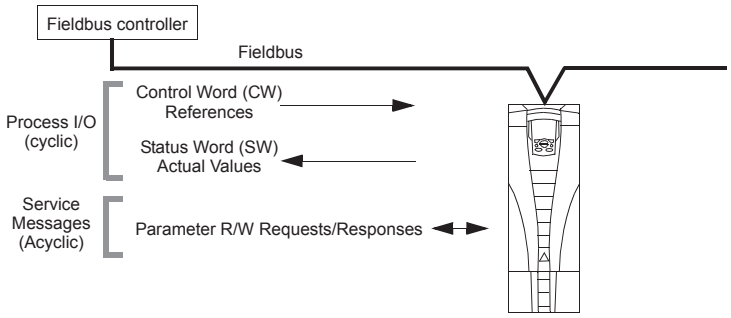

Control Word

The CONTROL WORD is the principal means for controlling the drive from a fieldbus system. The fieldbus controller sends the CONTROL WORD to the drive. The drive switches between states according to the bit-coded instructions in the CONTROL WORD. Using the CONTROL WORD requires that:

- The drive is in remote (REM) control.
- The serial communication channel is defined as the source for controlling commands from EXT1 (set using parameters 1001 EXT1 COMMANDS and 1102 EXT1/EXT2 SEL).
- The external plug-in fieldbus adapter is activated:

– Parameter 9802 COMM PROT SEL = 4 (EXT FBA).
– The external plug-in fieldbus adapter is configured to use the drive profile mode or drive profile objects.

The content of the CONTROL WORD depends on the protocol/profile used. See the user's manual provided with the FBA module and/or section *ABB Drives profile technical data* on page *232*.

Status Word

The STATUS WORD is a 16-bit word containing status information, sent by the drive to the fieldbus controller. The content of the STATUS WORD depends on the protocol/profile used. See the user's manual provided with the FBA module and/or section *ABB Drives profile technical data* on page *232*.

Reference

The contents of each REFERENCE word:

- can be used, as speed or frequency reference
- is a 16-bit word comprised of a sign bit and a 15-bit integer
- Negative references (indicating reversed rotation direction) are indicated by the two's complement of the corresponding positive reference value.

The use of a second reference (REF2) is supported only when a protocol is configured for the ABB Drives profile.

Reference scaling is fieldbus type specific. See the user's manual provided with the FBA module and/or the following sections as appropriate:

- *Reference scaling* on page *236* (*ABB Drives profile technical data*)
- *Reference scaling* on page *240* (*Generic profile technical data*).

Actual Values

Actual Values are 16-bit words containing information on selected operations of the drive. Drive Actual Values (for example, *Group 10: START/STOP/DIR* parameters) can be mapped to Input Words using *Group 51: EXT COMM MODULE* parameters (protocol-dependent, but typically parameters 5104…5126).

Planning

Network planning should address the following questions:

- What types and quantities of devices must be connected to the network?
- What control information must be sent down to the drives?
- What feedback information must be sent from the drives to the controlling system?

Mechanical and electrical installation – FBA

WARNING! Connections should be made only while the drive is disconnected from the power source.

Overview

The FBA (fieldbus adapter) is a plug-in module that fits in the drive's expansion slot 2. The module is held in place with plastic retaining clips and two screws. The screws also ground the shield for the module cable and connect the module GND signals to the drive control board.

On installation of the module, electrical connection to the drive is automatically established through the 34-pin connector.

Mounting procedure

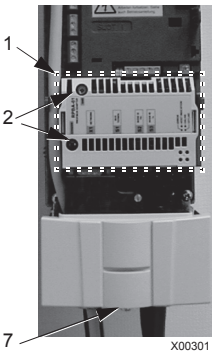

Note: Install the input power and motor cables first.

1. Insert the module carefully into the drive expansion slot 2 until the retaining clips lock the module into position.
2. Fasten the two screws (included) to the stand-offs.

Note: Correct installation of the screws is essential for fulfilling the EMC requirements and for proper operation of the module.

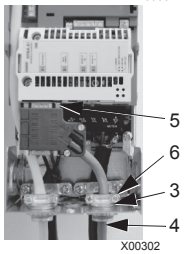

3. Open the appropriate knockout in the conduit box and install the cable clamp for the network cable.
4. Route the network cable through the cable clamp.
5. Connect the network cable to the module's network connector.
6. Tighten the cable clamp.
7. Install the conduit box cover (1 screw).
8. For configuration information see the following:
   - section *Communication set-up – FBA* on page *225*
   - section *Activate drive control functions – FBA* on page *225*
   - The protocol specific documentation provided with the module.

Communication set-up – FBA

Serial communication selection

To activate the serial communication, use parameter 9802 COMM PROT SEL. Set 9802 = 4 (EXT FBA).

Serial communication configuration

Setting 9802, together with mounting a particular FBA module, automatically sets the appropriate default values in parameters that define the communication process. These parameters and descriptions are defined in the user's manual supplied with the FBA module.

- Parameter 5101 is automatically configured.
- Parameters 5102…5126 are protocol-dependent and define, for example, the profile used and additional I/O words. These parameters are referred to as the fieldbus configuration parameters. See the user's manual provided with the FBA module for details on the fieldbus configuration parameters.
- Parameter 5127 forces the validation of changes to parameters 5102…5126. If parameter 5127 is not used, changes to parameters 5102…5126 take affect only after the drive power is cycled.
- Parameters 5128…5133 provide data about the FBA module currently installed (e.g. component versions and status).

See *Group 51: EXT COMM MODULE* for parameter descriptions.

Activate drive control functions – FBA

Fieldbus control of various drive functions requires configuration to:

- tell the drive to accept fieldbus control of the function
- define as a fieldbus input, any drive data required for control
- define as a fieldbus output, any control data required by the drive.

The following sections describe, at a general level, the configuration required for each control function. The last column in each table below is deliberately blank. See the user's manual supplied with the FBA module for the appropriate entry.

Start/Stop Direction control

Using the fieldbus for start/stop/direction control of the drive requires:

- drive parameter values set as defined below
- fieldbus controller supplied command(s) in the appropriate location. (The location is defined by the Protocol Reference, which is protocol dependent.)

Drive parameter		Value	Description	Protocol reference
1001	EXT1 COMMANDS	10 (COMM)	Start/Stop controlled by fieldbus with Ext1 selected.	

Drive parameter		Value	Description	Protocol reference
1002	EXT2 COMMANDS	10 (COMM)	Start/Stop by controlled fieldbus with Ext2 selected.	
1003	DIRECTION	3 (REQUEST)	Direction controlled by fieldbus.	

Input reference select

Using the fieldbus to provide input reference to the drive requires:

- drive parameter value set as defined below
- fieldbus controller supplied reference word(s) in the appropriate location. (The location is defined by the Protocol Reference, which is protocol dependent.)

Drive parameter		Value	Description	Protocol reference
1102	EXT1/EXT2 SEL	8 (COMM)	Ref. selected by fieldbus. (Required only if 2 references used.)	
1103	REF1 SELECT	8 (COMM) 9 (COMM+AI1) 10 (COMM*AI1)	Input reference 1supplied by fieldbus.	
1106	REF2 SELECT	8 (COMM) 9 (COMM+AI) 10 (COMM*AI)	Input reference 2 supplied by fieldbus. (Required only if 2 references used.)	

Note: Multiple references are supported only when using the ABB Drives profile.

Scaling

Where required, REFERENCES can be scaled. See the following sections, as appropriate:

- *Reference scaling* on page *236* (*ABB Drives profile technical data*)
- *Reference scaling* on page *240* (*Generic profile technical data*).

System control

Using the fieldbus for miscellaneous drive control requires:

- drive parameter values set as defined below
- fieldbus controller command(s) in the appropriate location. (The location is defined by the Protocol Reference, which is protocol dependent.)

Drive parameter		Value	Description	Protocol reference
1601	RUN ENABLE	7 (COMM)	Run enable by fieldbus.	
1604	FAULT RESET SEL	8 (COMM)	Fault reset by fieldbus.	
1607	PARAM SAVE	1 (SAVE)	Saves altered parameters to memory (then value returns to 0).	

Relay output control

Using the fieldbus for relay output control requires:

- drive parameter values set as defined below
- fieldbus controller supplied, binary coded, relay command(s) in the appropriate location. (The location is defined by the Protocol Reference, which is protocol dependent.)

Drive parameter		Value	Description	Protocol reference
1401	RELAY OUTPUT 1	35 (COMM) 36 (COMM(-1))	Relay Output 1 controlled by fieldbus.	
1402	RELAY OUTPUT 2		Relay Output 2 controlled by fieldbus.	
1403	RELAY OUTPUT 3		Relay Output 3 controlled by fieldbus.	
1410[1]	RELAY OUTPUT 4		Relay Output 4 controlled by fieldbus.	
1411[1]	RELAY OUTPUT 5		Relay Output 5 controlled by fieldbus.	
1412[1]	RELAY OUTPUT 6		Relay Output 6 controlled by fieldbus.	

[1] More than 3 relays requires the addition of a relay extension module.

Note: Relay status feedback occurs without configuration as defined below.

Drive parameter		Value	Protocol reference
0122	RO 1-3 STATUS	Relay 1…3 status.	
0123	RO 4-6 STATUS	Relay 4…6 status.	

Analog output control

Using the fieldbus for analog output control (e.g. PID setpoint) requires:

- drive parameter values set as defined below
- fieldbus controller supplied analog value(s) in the appropriate location. (The location is defined by the Protocol Reference, which is protocol dependent.)

Drive parameter		Value	Description	Protocol reference
1501	AO1 CONTENT SEL	135 (COMM VALUE 1)	Analog Output 1 controlled by writing to parameter 0135.	–
0135	COMM VALUE 1	–		
1502 … 1505	AO1 CONTENT MIN … MAXIMUM AO1	Set appropriate values.	Used for scaling	–
1506	FILTER AO1		Filter time constant for AO1.	–
1507	AO2 CONTENT SEL	136 (COMM VALUE 2)	Analog Output 2 controlled by writing to parameter 0136.	–
0136	COMM VALUE 2	–		
1508 … 1511	AO2 CONTENT MIN … MAXIMUM AO2	Set appropriate values.	Used for scaling	–
1512	FILTER AO2		Filter time constant for AO2.	–

PID Control setpoint source

Using the following settings to select the fieldbus as the setpoint source for PID loops:

Drive parameter		Value	Setting	Protocol reference
4010	SET POINT SEL (Set 1)	8 (COMM VALUE 1) 9 (COMM+AI1) 10 (COMM*AI1)	Setpoint is input reference 2 (+/-/* AI1)	
4110	SET POINT SEL (Set 2)			
4210	SET POINT SEL (Ext/Trim)			

Communication fault

When using fieldbus control, specify the drive's action if serial communication is lost.

Drive parameter		Value	Description
3018	COMM FAULT FUNC	0 (NOT SEL) 1 (FAULT) 2 (CONST SP7) 3 (LAST SPEED)	Set for appropriate drive response.
3019	COMM FAULT TIME	Set time delay before acting on a communication loss.	

Feedback from the drive – FBA

Inputs to the controller (drive outputs) have pre-defined meanings established by the protocol. This feedback does not require drive configuration. The following table lists a sample of feedback data. For a complete listing, see all parameters listed in section *Complete parameter descriptions* on page *98*.

Drive parameter		Protocol reference
0102	SPEED	
0103	OUTPUT FREQ	
0104	CURRENT	
0105	TORQUE	
0106	POWER	
0107	DC BUS VOLTAGE	
0109	OUTPUT VOLTAGE	
0301	FB CMD WORD 1 – bit 0 (STOP)	
0301	FB CMD WORD 1 – bit 2 (REV)	
0118	DI 1-3 STATUS – bit 0 (DI3)	

Scaling

To scale the drive parameter values see the following sections, as appropriate:

- *Actual Value scaling* on page *239* (*ABB Drives profile technical data*)
- *Actual Value scaling* on page *241* (*Generic profile technical data*).

Diagnostics – FBA

Fault handling

The ACS550 provides fault information as follows:

- The control panel display shows a fault code and text. See chapter *Diagnostics* on page *243* for a complete description.
- Parameters 0401 LAST FAULT, 0412 PREVIOUS FAULT1 and 0413 PREVIOUS FAULT2 store the most recent faults.
- For fieldbus access, the drive reports faults as a hexadecimal value, assigned and coded according to the DRIVECOM specification. See the table below. Not all profiles support requesting fault codes using this specification. For profiles that support this specification, the profile documentation defines the proper fault request process.

Drive fault code		Fieldbus fault code (DRIVECOM specification)
1	OVERCURRENT	2310h
2	DC OVERVOLT	3210h
3	DEV OVERTEMP	4210h
4	SHORT CIRC	2340h
5	Reserved	FF6Bh
6	DC UNDERVOLT	3220h
7	AI1 LOSS	8110h
8	AI2 LOSS	8110h
9	MOT OVERTEMP	4310h
10	PANEL LOSS	5300h
11	ID RUN FAIL	FF84h
12	MOTOR STALL	7121h
14	EXT FAULT 1	9000h
15	EXT FAULT 2	9001h
16	EARTH FAULT	2330h
17	Obsolete	FF6Ah
18	THERM FAIL	5210h
19	OPEX LINK	7500h
20	OPEX PWR	5414h
21	CURR MEAS	2211h
22	SUPPLY PHASE	3130h
23	ENCODER ERR	7301h
24	OVERSPEED	7310h
25	Reserved	FF80h
26	DRIVE ID	5400h

Drive fault code		Fieldbus fault code (DRIVECOM specification)
27	CONFIG FILE	630Fh
28	SERIAL 1 ERR	7510h
29	EFB CON FILE	6306h
30	FORCE TRIP	FF90h
31	EFB 1	FF92h
32	EFB 2	FF93h
33	EFB 3	FF94h
34	MOTOR PHASE	FF56h
35	OUTP WIRING	FF95h
36	INCOMPATIBLE SW	630Fh
37	CB OVERTEMP	4110h
38	USER LOAD CURVE	FF6Bh
101	SERF CORRUPT	FF55h
102	Reserved	FF55h
103	SERF MACRO	FF55h
104	Reserved	FF55h
105	Reserved	FF55h
201	DSP T1 OVERLOAD	6100h
202	DSP T2 OVERLOAD	6100h
203	DSP T3 OVERLOAD	6100h
204	DSP STACK ERROR	6100h
205	Reserved (obsolete)	5000h
206	CB ID ERROR	5000h
207	EFB LOAD ERR	6100h
1000	PAR HZRPM	6320h
1001	PAR PFC REF NEG	6320h
1002	Reserved (obsolete)	6320h
1003	PAR AI SCALE	6320h
1004	PAR AO SCALE	6320h
1005	PAR PCU 2	6320h
1006	PAR EXT RO	6320h
1007	PAR FIELDBUS MISSING	6320h
1008	PAR PFC MODE	6320h
1009	PAR PCU 1	6320h
1012	PAR PFC IO 1	6320h
1013	PAR PFC IO 2	6320h
1014	PAR PFC IO 3	6320h
1016	PAR USER LOAD C	6320h

Serial communication diagnostics

Besides the drive fault codes, the FBA module has diagnostic tools. Refer to the user's manual supplied with the FBA module.

ABB Drives profile technical data

Overview

The ABB Drives profile provides a standard profile that can be used on multiple protocols, including protocols available on the FBA module. This section describes the ABB Drives profile implemented for FBA modules.

Control Word

As described earlier in section *Control interface* on page *222*, the CONTROL WORD is the principal means for controlling the drive from a fieldbus system.

The following table and the state diagram later in this sub-section describe the CONTROL WORD content for the ABB Drives profile.

ABB Drives profile (FBA) CONTROL WORD				
Bit	**Name**	**Value**	**Commanded state**	**Comments**
0	OFF1 CONTROL	1	READY TO OPERATE	Enter READY TO OPERATE
		0	EMERGENCY OFF	Drive ramps to stop according to currently active deceleration ramp (2203 or 2205) Normal command sequence: • Enter OFF1 ACTIVE • Proceed to READY TO SWITCH ON, unless other interlocks (OFF2, OFF3) are active.
1	OFF2 CONTROL	1	OPERATING	Continue operation (OFF2 inactive)
		0	EMERGENCY OFF	Drive coasts to stop. Normal command sequence: • Enter OFF2 ACTIVE • Proceed to SWITCHON INHIBITED
2	OFF3 CONTROL	1	OPERATING	Continue operation (OFF3 inactive)
		0	EMERGENCY STOP	Drive stops within in time specified by parameter 2208. Normal command sequence: • Enter OFF3 ACTIVE • Proceed to SWITCH ON INHIBITED ⚠ **WARNING!** Be sure motor and driven equipment can be stopped using this mode.
3	INHIBIT OPERATION	1	OPERATION ENABLED	Enter OPERATION ENABLED (Note the Run enable signal must be active. See 1601. If 1601 is set to COMM, this bit also actives the Run Enable signal.)
		0	OPERATION INHIBITED	Inhibit operation. Enter OPERATION INHIBITED
4	RAMP_OUT_ ZERO	1	NORMAL OPERATION	Enter RAMP FUNCTION GENERATOR: ACCELERATION ENABLED
		0	RFG OUT ZERO	Force ramp function generator output to Zero. Drive ramps to stop (current and DC voltage limits in force).

ABB Drives profile (FBA) CONTROL WORD				
Bit	**Name**	**Value**	**Commanded state**	**Comments**
5	RAMP_HOLD	1	RFG OUT ENABLED	Enable ramp function. Enter RAMP FUNCTION GENERATOR: ACCELERATOR ENABLED
		0	RFG OUT HOLD	Halt ramping (Ramp Function Generator output held)
6	RAMP_IN_ ZERO	1	RFG INPUT ENABLED	Normal operation. Enter OPERATING
		0	RFG INPUT ZERO	Force Ramp Function Generator input to zero.
7	RESET	0=>1	RESET	Fault reset if an active fault exists (Enter SWITCH-ON INHIBITED). Effective if 1604 = COMM.
		0	OPERATING	Continue normal operation
8…9	Unused			
10	REMOTE_CMD	1		Fieldbus control enabled
		0		• CW ≠ 0 or Ref ≠ 0: Retain last CW and Ref. • CW = 0 and Ref = 0: Fieldbus control enabled. • Ref and deceleration/acceleration ramp are locked.
11	EXT CTRL LOC	1	EXT2 SELECT	Select external control location 2 (EXT2). Effective if 1102 = COMM.
		0	EXT1 SELECT	Select external control location 1 (EXT1). Effective if 1102 = COMM.
12…15	Unused			

Status Word

As described earlier in section *Control interface* on page *222*, the contents of the STATUS WORD is status information, sent by the drive to the master station. The following table and the state diagram later in this sub-section describe the status word content.

ABB Drives profile (FBA) STATUS WORD			
Bit	**Name**	**Value**	**Description (Correspond to states/boxes in the state diagram)**
0	RDY_ON	1	READY TO SWITCH ON
		0	NOT READY TO SWITCH ON
1	RDY_RUN	1	READY TO OPERATE
		0	OFF1 ACTIVE
2	RDY_REF	1	OPERATION ENABLED
		0	OPERATION INHIBITED
3	TRIPPED	0…1	FAULT
		0	No fault

ABB Drives profile (FBA) STATUS WORD			
Bit	**Name**	**Value**	**Description (Correspond to states/boxes in the state diagram)**
4	OFF_2_STA	1	OFF2 inactive
		0	**OFF2 ACTIVE**
5	OFF_3_STA	1	OFF3 inactive
		0	**OFF3 ACTIVE**
6	SWC_ON_INHIB	1	SWITCH-ON INHIBIT ACTIVE
		0	SWITCH-ON INHIBIT NOT ACTIVE
7	ALARM	1	Alarm (See section *Alarm listing* on page *250* for details on alarms.)
		0	No alarm
8	AT_SETPOINT	1	OPERATING. Actual value equals (within tolerance limits) the reference value.
		0	Actual value is outside tolerance limits (not equal to reference value).
9	REMOTE	1	Drive control location: REMOTE (EXT1 or EXT2)
		0	Drive control location: LOCAL
10	ABOVE_LIMIT	1	Supervised parameter's value ≥ supervision high limit. Bit remains "1" until supervised parameter's value < supervision low limit. See *Group 32: SUPERVISION*.
		0	Supervised parameter's value < supervision low limit. Bit remains "0" until supervised parameter's value > supervision high limit. See *Group 32: SUPERVISION*.
11	EXT CTRL LOC	1	External control location 2 (EXT2) selected
		0	External control location 1 (EXT1) selected
12	EXT RUN ENABLE	1	External Run Enable signal received
		0	No External Run Enable signal received
13… 15	Unused		

The state diagram below describes the start-stop function of CONTROL WORD (CW) and STATUS WORD (SW) bits.

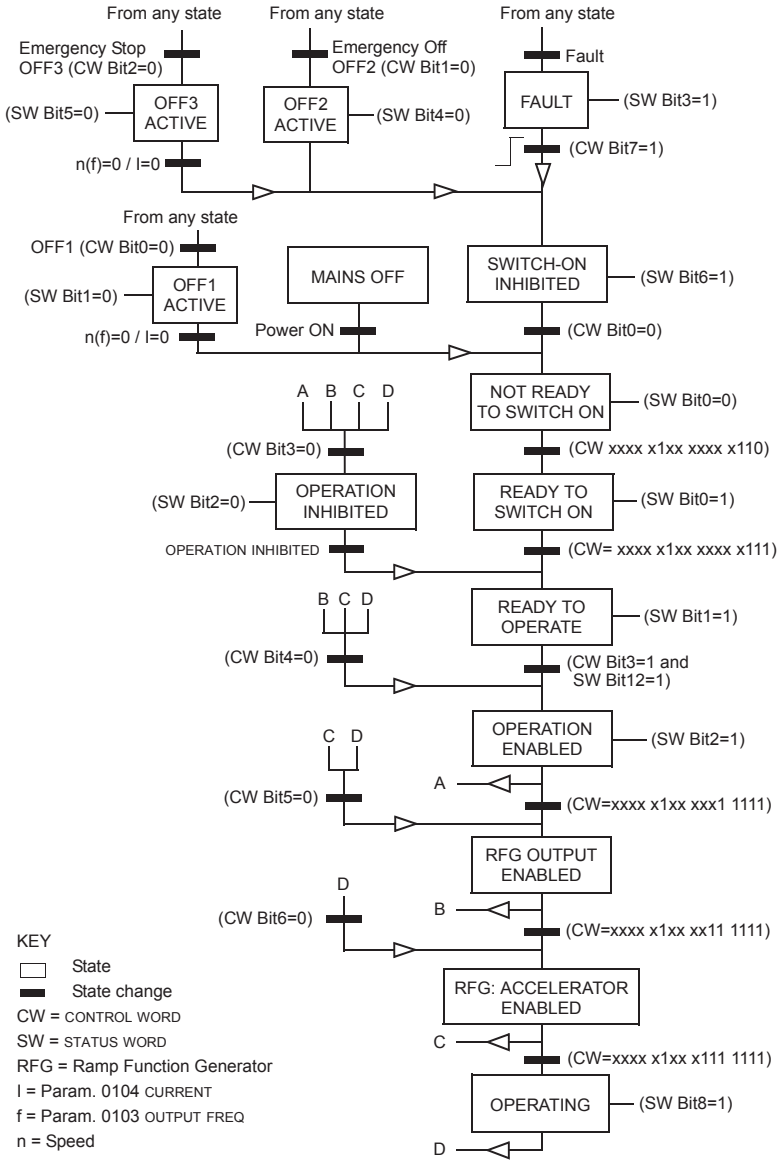

Reference

As described earlier in section *Control interface* on page *222*, the REFERENCE word is a speed or frequency reference.

Reference scaling

The following table describes REFERENCE scaling for the ABB Drives profile.

ABB Drives Profile (FBA)				
Reference	**Range**	**Reference type**	**Scaling**	**Remarks**
REF1	-32767… +32767	Speed or frequency	-20000 = -**(par. 1105)** 0 = 0 +20000 = **(par. 1105)** (20000 corresponds to 100%)	Final reference limited by 1104/1105. Actual motor speed limited by 2001/2002 (speed) or 2007/2008 (frequency).
REF2	-32767… +32767	Speed or frequency	-10000 = -**(par. 1108)** 0 = 0 +10000 = **(par. 1108)** (10000 corresponds to 100%)	Final reference limited by 1107/1108. Actual motor speed limited by 2001/2002 (speed) or 2007/2008 (frequency).
		Torque	-10000 = -**(par. 1108)** 0 = 0 +10000 = **(par. 1108)** (10000 corresponds to 100%)	Final reference limited by 2015/2017 (torque1) or 2016/2018 (torque2).
		PID Reference	-10000 = -**(par. 1108)** 0 = 0 +10000 = **(par. 1108)** (10000 corresponds to 100%)	Final reference limited by 4012/4013 (PID set1) or 4112/4113 (PID set2).

Note: The setting of parameter 1104 REF1 MIN and 1107 REF2 MIN has no effect on the scaling of references.

When parameter 1103 REF1 SELECT or 1106 REF2 SELECT is set to COMM+AI1 or COMM*AI1, the reference is scaled as follows:

ABB Drives profile (FBA)		
Reference	**Value setting**	**AI reference scaling**
REF1	COMM+AI1	COMM (%) + (AI (%) - 0.5 · REF1 MAX (%)) 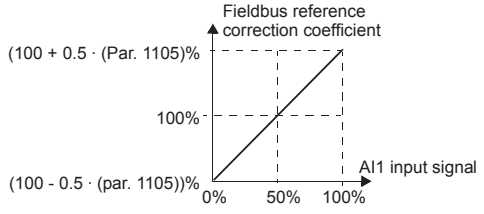

ABB Drives profile (FBA)		
Reference	**Value setting**	**AI reference scaling**
REF1	COMM*AI1	COMM (%) · (AI (%) / 0.5 · REF1 MAX (%)) 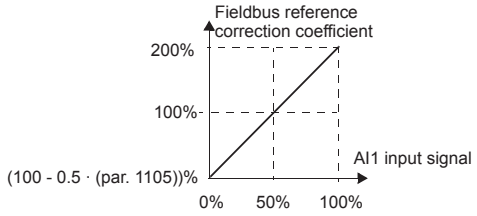
REF2	COMM+AI1	COMM (%) + (AI (%) - 0.5 · REF2 MAX (%)) 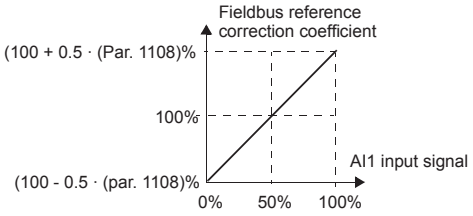
REF2	COMM*AI1	COMM (%) · (AI (%) / 0.5 · REF2 MAX (%)) 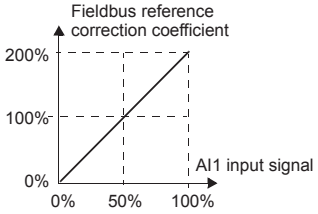

Reference handling

Use *Group 10: START/STOP/DIR* parameters to configure for control of rotation direction for each control location (EXT1 and EXT2). The following diagrams illustrate how group 10 parameters and the sign of the fieldbus reference interact to produce REFERENCE values (REF1 and REF2). Note, fieldbus references are bipolar, that is they can be positive or negative.

ABB Drives profile		
Parameter	**Value setting**	**AI reference scaling**
1003 DIRECTION	1 (FORWARD)	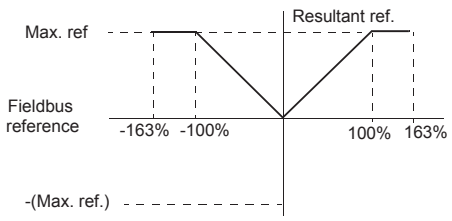
1003 DIRECTION	2 (REVERSE)	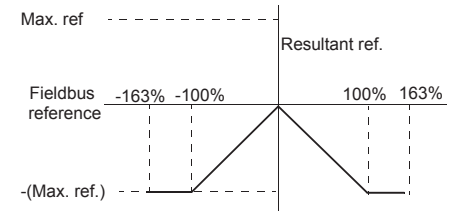
1003 DIRECTION	3 (REQUEST)	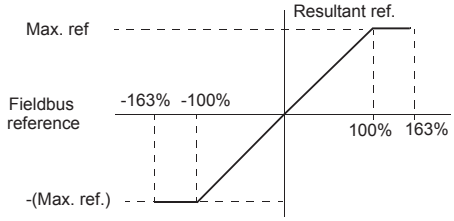

Actual Value

As described earlier in section *Control interface* on page *222*, Actual Values are words containing drive values.

Actual Value scaling

The scaling of the integers sent to the fieldbus as Actual Values depends on the resolution of the selected drive parameter. Except as noted for ACT1 and ACT2 below, scale the feedback integer using the resolution listed for the parameter in section *Complete parameter list* on page *85*. For example:

Feedback integer	Parameter resolution	Scaled Value
1	0.1 mA	1 · 0.1 mA = 0.1 mA
10	0.1%	10 · 0.1% = 1%

Data words 5 and 6 are scaled as follows:

ABB Drives profile		
	Contents	**Scaling**
ACT1	ACTUAL SPEED	-20000 … +20000 = -(par. 1105) … +(par. 1105)
ACT2	TORQUE	-10000 … +10000 = -100% … +100%

Virtual addresses of the drive control

The virtual address area of the drive control is allocated as follows:

1	Control Word
2	Reference 1 (REF1)
3	Reference 2 (REF2)
4	Status Word
5	Actual Value 1 (ACT1)
6	Actual Value 2 (ACT2)

Generic profile technical data

Overview

The generic profile aims to fulfill the industry-standard drive profile for each protocol (e.g. PROFIdrive for PROFIBUS, AC/DC Drive for DeviceNet).

Control Word

As described earlier in section *Control interface* on page *222*, the CONTROL WORD is the principal means for controlling the drive from a fieldbus system. For specific CONTROL WORD content, see the user's manual provided with the FBA module.

Status Word

As described earlier in section *Control interface* on page *222*, the contents of the STATUS WORD is status information, sent by the drive to the master station. For specific STATUS WORD content, see the user's manual provided with the FBA module.

Reference

As described earlier in section *Control interface* on page *222*, the REFERENCE word is a speed or frequency reference.

Note: REF2 is not supported by the Generic Drive profiles.

Reference scaling

REFERENCE scaling is fieldbus type specific. However, at the drive, the meaning of a 100% REFERENCE value is fixed as described in the table below. For a detailed description on the range and scaling of the REFERENCE, see the user's manual supplied with the FBA module.

Generic profile				
Reference	**Range**	**Reference type**	**Scaling**	**Remarks**
REF	Fieldbus specific	Speed	-100% = **-(par. 9908)** 0 = 0 +100 = **(par. 9908)**	Final reference limited by 1104/1105. Actual motor speed limited by 2001/2002 (speed).
		Frequency	-100% = **-(par. 9907)** 0 = 0 +100 = **(par. 9907)**	Final reference limited by 1104/1105. Actual motor speed limited by 2007/2008 (frequency).

Actual Values

As described earlier in section *Control interface* on page *222*, Actual Values are words containing drive values.

Actual Value scaling

For Actual Values, scale the feedback integer using the parameter's resolution. (See section *Complete parameter list* on page *85* for parameter resolutions.) For example:

Feedback integer	Parameter resolution	(Feedback integer) · (Parameter resolution) = Scaled Value
1	0.1 mA	1 · 0.1 mA = 0.1 mA
10	0.1%	10 · 0.1% = 1%

Where parameters are in percent, the *Complete parameter list* section specifies what parameter corresponds to 100%. In such cases, to convert from percent to engineering units, multiply by the value of the parameter that defines 100% and divide by 100%. For example:

Feedback integer	Parameter resolution	Value of the parameter that defines 100%	(Feedback integer) · (Parameter resolution) · (Value of 100% ref.) / 100% = Scaled Value
10	0.1%	1500 rpm[1]	10 · 0.1% · 1500 RPM / 100% = 15 rpm
100	0.1%	500 Hz[2]	100 · 0.1% · 500 Hz / 100% = 50 Hz

[1] Assuming, for the sake of this example, that the Actual Value uses parameter 9908 MOT NOM SPEED as the 100% reference and that 9908 = 1500 rpm.

[2] Assuming, for the sake of this example, that the Actual Value uses parameter 9907 MOT NOM FREQ as the 100% reference and that 9907 = 500 Hz.

Actual Value mapping

See the user's manual supplied with the FBA module.

Diagnostics

WARNING! Do not attempt any measurement, parts replacement or other service procedure not described in this manual. Such action will void the warranty, may endanger correct operation and increase downtime and expense.

WARNING! All electrical installation and maintenance work described in this chapter should only be undertaken by qualified service personnel. The safety instructions in chapter *Safety* on page *5* must be followed.

Diagnostic displays

The drive detects error situations and reports them using:

- the green and red LED on the body of the drive
- the status LED on the control panel (if an Assistant Control Panel is attached to the drive)
- the control panel display (if a control panel is attached to the drive)
- the Fault Word and Alarm Word parameter bits (parameters 0305 to 0309). See *Group 03: FB ACTUAL SIGNALS* on page *104* for the bit definitions.

The form of the display depends on the severity of the error. You can specify the severity for many errors by directing the drive to:

- ignore the error situation
- report the situation as an alarm
- report the situation as a fault.

Red – Faults

The drive signals that it has detected a severe error, or fault, by:

- enabling the red LED on the drive (LED is either steady on or blinking)
- showing the steady red status LED on the control panel (if attached to the drive)
- setting an appropriate bit in a Fault Word parameter (0305 to 0307)
- overriding the control panel display with the display of a fault code in the Fault mode (figures on the right)
- stopping the motor (if it was on).

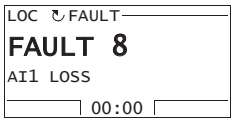

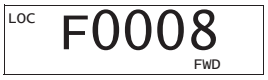

The fault code on the control panel display is temporary. Pressing any of the following keys removes the fault message: MENU, ENTER, UP, or DOWN key.

The message reappears after a few seconds if the control panel is not touched and the fault is still active.

Flashing green – Alarms

For less severe errors, called alarms, the diagnostic display is advisory. For these situations, the drive is simply reporting that it had detected something "unusual." In these situations, the drive:

- flashes the green LED on the drive (does not apply to alarms that arise from control panel operation errors)
- flashes the green LED on the control panel (if attached to the drive)
- sets an appropriate bit in an Alarm Word parameter (0308 or 0309). See *Group 03: FB ACTUAL SIGNALS* on page *104* for the bit definitions
- overrides the control panel display with the display of an alarm code and/or name in the Fault mode (figures on the right).

Alarm messages disappear from the control panel display after a few seconds. The message returns periodically as long as the alarm condition exists.

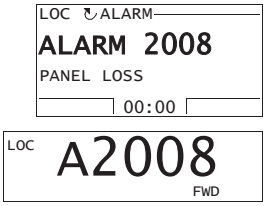

Correcting faults

The recommended corrective action for faults is:

- Use the table in section *Fault listing* below to find and address the root cause of the problem.
- Reset the drive. See section *Fault resetting* on page *249*.

Fault listing

The following table lists the faults by code number and describes each. The fault name is the long form shown in the Fault mode of the Assistant Control Panel when the fault occurs. The fault names shown (for Assistant Control Panel only) in the Fault Logger mode (see page *55*) and the fault names for parameter 0401 LAST FAULT may be shorter.

Fault code	Fault name in panel	Description and recommended corrective action
1	OVERCURRENT	Output current is excessive. Check for and correct: • Excessive motor load. • Insufficient acceleration time (parameters 2202 ACCELER TIME 1 and 2205 ACCELER TIME 2). • Faulty motor, motor cables or connections.

Fault code	Fault name in panel	Description and recommended corrective action
2	DC OVERVOLT	Intermediate circuit DC voltage is excessive. Check for and correct: • Static or transient overvoltages in the input power supply. • Insufficient deceleration time (parameters 2203 DECELER TIME 1 and 2206 DECELER TIME 2). • Undersized brake chopper (if present). • Verify that overvoltage controller is ON (using parameter 2005).
3	DEV OVERTEMP	Drive heatsink is overheated. Temperature is at or above limit. R1…R4 & R7/R8: 115 °C (239 °F) R5/R6: 125 °C (257 °F) Check for and correct: • Fan failure. • Obstructions in the air flow. • Dirt or dust coating on the heat sink. • Excessive ambient temperature. • Excessive motor load.
4	SHORT CIRC	Fault current. Check for and correct: • A short-circuit in the motor cable(s) or motor. • Supply disturbances.
5	RESERVED	Not used.
6	DC UNDERVOLT	Intermediate circuit DC voltage is not sufficient. Check for and correct: • Missing phase in the input power supply. • Blown fuse. • Undervoltage on mains.
7	AI1 LOSS	Analog input 1 loss. Analog input value is less than AI1 FAULT LIMIT (3021). Check for and correct: • Source and connection for analog input. • Parameter settings for AI1 FAULT LIMIT (3021) and 3001 AI<MIN FUNCTION.
8	AI2 LOSS	Analog input 2 loss. Analog input value is less than AI2 FAULT LIMIT (3022). Check for and correct: • Source and connection for analog input. • Parameter settings for AI2 FAULT LIMIT (3022) and 3001 AI<MIN FUNCTION.
9	MOT OVERTEMP	Motor is too hot, based on either the drive's estimate or on temperature feedback. • Check for overloaded motor. • Adjust the parameters used for the estimate (3005…3009). • Check the temperature sensors and *Group 35: MOTOR TEMP MEAS* parameters.
10	PANEL LOSS	Panel communication is lost and either: • Drive is in local control mode (the control panel displays LOC), or • Drive is in remote control mode (REM) and is parameterized to accept start/stop, direction or reference from the control panel. To correct check: • Communication lines and connections. • Parameter 3002 PANEL COMM ERR. • Parameters in *Group 10: START/STOP/DIR* and *Group 11: REFERENCE SELECT* (if drive operation is REM).

Fault code	Fault name in panel	Description and recommended corrective action
11	ID RUN FAIL	The Motor ID Run was not completed successfully. Check for and correct: • Motor connections. • Motor parameters 9905…9909.
12	MOTOR STALL	Motor or process stall. Motor is operating in the stall region. Check for and correct: • Excessive load. • Insufficient motor power. • Parameters 3010…3012.
13	RESERVED	Not used.
14	EXT FAULT 1	Digital input defined to report first external fault is active. See parameter 3003 EXTERNAL FAULT 1.
15	EXT FAULT 2	Digital input defined to report second external fault is active. See parameter 3004 EXTERNAL FAULT 2.
16	EARTH FAULT	Possible ground fault detected in the motor or motor cables. The drive monitors for ground faults while the drive is running and while the drive is not running. Detection is more sensitive when the drive is not running and can produce false positives. Possible corrections: • Check for/correct faults in the input wiring. • Verify that motor cable does not exceed maximum specified length. • A delta grounded input power supply and motor cables with high capacitance may result in erroneous error reports during non-running tests. To disable response to fault monitoring when the drive is not running, use parameter 3023 WIRING FAULT. To disable response to all ground fault monitoring, use parameter 3017 EARTH FAULT.
17	OBSOLETE	Not used.
18	THERM FAIL	Internal fault. The thermistor measuring the internal temperature of the drive is open or shorted. Contact your local ABB representative.
19	OPEX LINK	Internal fault. A communication-related problem has been detected on the fiber optic link between the control and OINT boards. Contact your local ABB representative.
20	OPEX PWR	Internal fault. Low voltage condition detected on OINT power supply. Contact your local ABB representative.
21	CURR MEAS	Internal fault. Current measurement is out of range. Contact your local ABB representative.
22	SUPPLY PHASE	Ripple voltage in the DC link is too high. Check for and correct: • Missing mains phase. • Blown fuse.
23	ENCODER ERR	The drive is not detecting a valid encoder signal. Check for and correct: • Encoder presence and proper connection (reverse wired, loose connection or short circuit). • Voltage logic levels are outside of the specified range. • A working and properly connected Pulse Encoder Interface Module, OTAC-01. • Wrong value entered in parameter 5001 PULSE NR. A wrong value will only be detected if the error is such that the calculated slip is greater than 4 times the rated slip of the motor. • Encoder is not being used, but parameter 5002 ENCODER ENABLE = 1 (ENABLE).

Fault code	Fault name in panel	Description and recommended corrective action
24	OVERSPEED	Motor speed is greater than 120% of the larger (in magnitude) of 2001 MINIMUM SPEED or 2002 MAXIMUM SPEED. Check for and correct: • Parameter settings for 2001 and 2002. • Adequacy of motor braking torque. • Applicability of torque control. • Brake chopper and resistor.
25	RESERVED	Not used.
26	DRIVE ID	Internal fault. Configuration Block Drive ID is not valid. Contact your local ABB representative.
27	CONFIG FILE	Internal configuration file has an error. Contact your local ABB representative.
28	SERIAL 1 ERR	Fieldbus communication has timed out. Check for and correct: • Fault setup (3018 COMM FAULT FUNC and 3019 COMM FAULT TIME). • Communication settings (*Group 51: EXT COMM MODULE* or *Group 53: EFB PROTOCOL* as appropriate). • Poor connections and/or noise on line.
29	EFB CON FILE	Error in reading the configuration file for the embedded fieldbus.
30	FORCE TRIP	Fault trip forced by the fieldbus. See the fieldbus User's Manual.
31	EFB 1	Fault code reserved for the embedded fieldbus (EFB) protocol application. The meaning is protocol dependent.
32	EFB 2	
33	EFB 3	
34	MOTOR PHASE	Fault in the motor circuit. One of the motor phases is lost. Check for and correct: • Motor fault. • Motor cable fault. • Thermal relay fault (if used). • Internal fault.
35	OUTP WIRING	Possible power wiring error detected. When the drive is not running it monitors for an improper connection between the drive input power and the drive output. Check for and correct: • Proper input wiring – line voltage is NOT connected to drive output. • The fault can be erroneously declared if the input power is a delta grounded system and motor cable capacitance is large. This fault can be disabled using parameter 3023 WIRING FAULT.
36	INCOMPATIBLE SW	The drive cannot use the software. • Internal fault. • The loaded software is not compatible with the drive. • Call support representative.
37	CB OVERTEMP	Drive control board is overheated. The fault trip limit is 88 °C. Check for and correct: • Excessive ambient temperature. • Fan failure. • Obstructions in the air flow. Not for drives with an OMIO control board.
38	USER LOAD CURVE	Condition defined by parameter 3701 USER LOAD C MODE has been valid longer than the time defined by 3703 USER LOAD C TIME.

Fault code	Fault name in panel	Description and recommended corrective action
101…199	SYSTEM ERROR	Error internal to the drive. Contact your local ABB representative and report the error number.
201…299	SYSTEM ERROR	Error in the system. Contact your local ABB representative and report the error number.
-	UNKNOWN DRIVE TYPE: ACS550 SUPPORTED DRIVES: X	Wrong type of panel, i.e. panel that supports drive X but not the ACS550, has been connected to the ACS550.

Faults that indicate conflicts in the parameter settings are listed below.

Fault code	Fault name in panel	Description and recommended corrective action
1000	PAR HZRPM	Parameter values are inconsistent. Check for any of the following: • 2001 MINIMUM SPEED > 2002 MAXIMUM SPEED. • 2007 MINIMUM FREQ > 2008 MAXIMUM FREQ. • 2001 MINIMUM SPEED / 9908 MOTOR NOM SPEED is outside proper range (> 50). • 2002 MAXIMUM SPEED / 9908 MOTOR NOM SPEED is outside proper range (> 50). • 2007 MINIMUM FREQ / 9907 MOTOR NOM FREQ is outside proper range (> 50). • 2008 MAXIMUM FREQ / 9907 MOTOR NOM FREQ is outside proper range (> 50).
1001	PAR PFC REF NEG	Parameter values are inconsistent. Check for the following: • 2007 MINIMUM FREQ is negative, when 8123 PFC ENABLE is active.
1002	RESERVED	Not used.
1003	PAR AI SCALE	Parameter values are inconsistent. Check for any of the following: • 1301 MINIMUM AI1 > 1302 MAXIMUM AI1. • 1304 MINIMUM AI2 > 1305 MAXIMUM AI2.
1004	PAR AO SCALE	Parameter values are inconsistent. Check for any of the following: • 1504 MINIMUM AO1 > 1505 MAXIMUM AO1. • 1510 MINIMUM AO2 > 1511 MAXIMUM AO2.
1005	PAR PCU 2	Parameter values for power control are inconsistent: Improper motor nominal kVA or motor nominal power. Check for the following: • $1.1 \leq (9906 \cdot 9905 \cdot 1.73 / P_N) \leq 3.0$ where: $P_N = 1000 \cdot 9909$ MOTOR NOM POWER (if units are kW) or $P_N = 746 \cdot 9909$ MOTOR NOM POWER (if units are hp, e.g. in US)
1006	PAR EXT RO	Parameter values are inconsistent. Check for the following: • Extension relay module not connected and • 1410…1412 RELAY OUTPUTS 4…6 have non-zero values.
1007	PAR FIELDBUS MISSING	Parameter values are inconsistent. Check for and correct: • A parameter is set for fieldbus control (e.g. 1001 EXT1 COMMANDS = 10 (COMM)), but 9802 COMM PROT SEL = 0.
1008	PAR PFC MODE	Parameter values are inconsistent – 9904 MOTOR CTRL MODE must be = 3 (SCALAR:FREQ), when 8123 PFC ENABLE is activated.

Fault code	Fault name in panel	Description and recommended corrective action
1009	PAR PCU 1	Parameter values for power control are inconsistent: Improper motor nominal frequency or speed. Check for both of the following: • 1 ≤ (60 · 9907 MOTOR NOM FREQ / 9908 MOTOR NOM SPEED ≤ 16 • 0.8 ≤ 9908 MOTOR NOM SPEED / (120 · 9907 MOTOR NOM FREQ / Motor Poles) ≤ 0.992
1010/ 1011	RESERVED	Not used.
1012	PAR PFC IO 1	IO configuration is not complete – not enough relays are parameterized to PFC. Or, a conflict exists between *Group 14: RELAY OUTPUTS*, parameter 8117 NR OF AUX MOT and parameter 8118 AUTOCHNG INTERV.
1013	PAR PFC IO 2	IO configuration is not complete – the actual number of PFC motors (parameter 8127, MOTORS) does not match the PFC motors in *Group 14: RELAY OUTPUTS* and parameter 8118 AUTOCHNG INTERV.
1014	PAR PFC IO 3	IO configuration is not complete – the drive is unable to allocate a digital input (interlock) for each PFC motor (parameters 8120 INTERLOCKS and 8127 MOTORS).
1015	RESERVED	Not used.
1016	PAR USER LOAD C	Parameter values for the user load curve are inconsistent. Check that the following conditions are met: • 3704 LOAD FREQ 1 ≤ 3707 LOAD FREQ 2 ≤ 3710 LOAD FREQ 3 ≤ 3713 LOAD FREQ 4 ≤ 3716 LOAD FREQ 5. • 3705 LOAD TORQ LOW 1 ≤ 3706 LOAD TORQ HIGH 1. • 3708 LOAD TORQ LOW 2 ≤ 3709 LOAD TORQ HIGH 2. • 3711 LOAD TORQ LOW 3 ≤ 3712 LOAD TORQ HIGH 3. • 3714 LOAD TORQ LOW 4 ≤ 3715 LOAD TORQ HIGH 4. • 3717 LOAD TORQ LOW 5 ≤ 3718 LOAD TORQ HIGH 5.

Fault resetting

The ACS550 can be configured to automatically reset certain faults. Refer to parameter *Group 31: AUTOMATIC RESET*.

WARNING! If an external source for start command is selected and it is active, the ACS550 may start immediately after fault reset.

Flashing red LED

To reset the drive for faults indicated by a flashing red LED:

- Turn the power off for 5 minutes.

Red LED

To reset the drive for faults indicated by a red LED (on, not flashing), correct the problem and do one of the following:

- Press RESET from the control panel.
- Turn the power off for 5 minutes.

Depending on the value of 1604 FAULT RESET SEL, the following could also be used to reset the drive:

- digital input
- serial communication.

When the fault has been corrected, the motor can be started.

History

For reference, the last three fault codes are stored into parameters 0401, 0412, 0413. For the most recent fault (identified by parameter 0401), the drive stores additional data (in parameters 0402…0411) to aid in troubleshooting a problem. For example, parameter 0404 stores the motor speed at the time of the fault.

The Assistant Control Panel provides additional information about the fault history. See section *Fault Logger mode* on page *55* for more information.

To clear the fault history (all of the *Group 04: FAULT HISTORY* parameters):

1. Using the control panel in the Parameters mode, select parameter 0401.
2. Press EDIT (or ENTER on the Basic Control Panel).
3. Press UP and DOWN at the same time.
4. Press SAVE.

Correcting alarms

The recommended corrective action for alarms is:

- Determine if the alarm requires any corrective action (action is not always required).
- Use the table in section *Alarm listing* below to find and address the root cause of the problem.

Alarm listing

The following table lists the alarms by code number and describes each.

Alarm code	Display	Description
2001	OVERCURRENT	Current limiting controller is active. Check for and correct: • Excessive motor load. • Insufficient acceleration time (parameters 2202 ACCELER TIME 1 and 2205 ACCELER TIME 2). • Faulty motor, motor cables or connections.
2002	OVERVOLTAGE	Overvoltage controller is active. Check for and correct: • Static or transient overvoltages in the input power supply. • Insufficient deceleration time (parameters 2203 DECELER TIME 1 and 2206 DECELER TIME 2).
2003	UNDERVOLTAGE	Undervoltage controller is active. Check for and correct: • Undervoltage on mains.

Alarm code	Display	Description
2004	DIR LOCK	The change in direction being attempted is not allowed. Either: • Do not attempt to change the direction of motor rotation, or • Change parameter 1003 DIRECTION to allow direction change (if reverse operation is safe).
2005	IO COMM	Fieldbus communication has timed out. Check for and correct: • Fault setup (3018 COMM FAULT FUNC and 3019 COMM FAULT TIME). • Communication settings (*Group 51: EXT COMM MODULE* or *Group 53: EFB PROTOCOL* as appropriate). • Poor connections and/or noise on line.
2006	AI1 LOSS	Analog input 1 is lost, or value is less than the minimum setting. Check: • Input source and connections. • Parameter that sets the minimum (3021). • Parameter that sets the alarm/fault operation (3001),
2007	AI2 LOSS	Analog input 2 is lost, or value is less than the minimum setting. Check: • Input source and connections. • Parameter that sets the minimum (3022). • Parameter that sets the alarm/fault operation (3001).
2008	PANEL LOSS	Panel communication is lost and either: • Drive is in local control mode (the control panel displays LOC), or • Drive is in remote control mode (REM) and is parameterized to accept start/stop, direction or reference from the control panel. To correct check: • Communication lines and connections. • Parameter 3002 PANEL COMM ERR. • Parameters in *Group 10: START/STOP/DIR* and *Group 11: REFERENCE SELECT* (if drive operation is REM).
2009	DEVICE OVERTEMP	Drive heatsink is hot. This alarm warns that a DEVICE OVERTEMP fault may be near. R1…R4 & R7/R8: 100 °C (212 °F) R5/R6: 110 °C (230 °F) Check for and correct: • Fan failure. • Obstructions in the air flow. • Dirt or dust coating on the heat sink. • Excessive ambient temperature. • Excessive motor load.
2010	MOTOR TEMP	Motor is hot, based on either the drive's estimate or on temperature feedback. This alarm warns that a MOT OVERTEMP fault trip may be near. Check: • Check for overloaded motor. • Adjust the parameters used for the estimate (3005…3009). • Check the temperature sensors and *Group 35: MOTOR TEMP MEAS*.
2011	RESERVED	Not used.
2012	MOTOR STALL	Motor is operating in the stall region. This alarm warns that a MOTOR STALL fault trip may be near.

Alarm code	Display	Description
2013 (Note 1)	AUTORESET	This alarm warns that the drive is about to perform an automatic fault reset, which may start the motor. • To control automatic reset, use *Group 31: AUTOMATIC RESET*.
2014 (Note 1)	AUTOCHANGE	This alarm warns that the PFC autochange function is active. • To control PFC, use *Group 81: PFC CONTROL* and the *PFC macro* on page *78*.
2015	PFC I LOCK	This alarm warns that the PFC interlocks are active, which means that the drive cannot start the following: • Any motor (when Autochange is used). • The speed regulated motor (when Autochange is not used).
2016/ 2017	RESERVED	Not used.
2018 (Note 1)	PID SLEEP	This alarm warns that the PID sleep function is active, which means that the motor could accelerate when the PID sleep function ends. • To control PID sleep, use parameters 4022…4026 or 4122…4126.
2019	ID RUN	Performing ID Run.
2020	RESERVED	Not used.
2021	START ENABLE 1 MISSING	This alarm warns that the Start Enable 1 signal is missing. • To control Start Enable 1 function, use parameter 1608. To correct, check: • Digital input configuration. • Communication settings.
2022	START ENABLE 2 MISSING	This alarm warns that the Start Enable 2 signal is missing. • To control Start Enable 2 function, use parameter 1609. To correct, check: • Digital input configuration. • Communication settings.
2023	EMERGENCY STOP	Emergency stop activated.
2024	ENCODER ERROR	The drive is not detecting a valid encoder signal. Check for and correct: • Encoder presence and proper connection (reverse wired, loose connection,or short circuit). • Voltage logic levels are outside of the specified range. • A working and properly connected Pulse Encoder Interface Module, OTAC-01. • Wrong value entered in parameter 5001 PULSE NR. A wrong value will only be detected if the error is such that the calculated slip is greater than 4 times the rated slip of the motor. • Encoder is not being used, but parameter 5002 ENCODER ENABLE = 1 (ENABLE).
2025	FIRST START	Signals that a the drive is performing a First Start evaluation of motor characteristics. This is normal the first time the motor is run after motor parameters are entered or changed. See parameter 9910 ID RUN for a description of motor models.
2026	RESERVED	Not used.

Alarm code	Display	Description
2027	USER LOAD CURVE	This alarm warns that the condition defined by parameter 3701 USER LOAD C MODE has been valid longer than half of the time defined by 3703 USER LOAD C TIME.
2028	START DELAY	Shown during the Start delay. See parameter 2113 START DELAY.

Note 1. Even when the relay output is configured to indicate alarm conditions (e.g. parameter 1401 RELAY OUTPUT 1 = 5 (ALARM) or 16 (FLT/ALARM)), this alarm is not indicated by a relay output.

Alarm codes (Basic Control Panel)

The Basic Control Panel indicates control panel alarms with a code, A5xxx. The following table lists the alarm codes and descriptions.

Code	Description
5001	Drive is not responding.
5002	The communication profile is incompatible with the drive.
5010	The panel's parameter backup file is corrupted.
5011	Drive is controlled from another source.
5012	Rotation direction is locked.
5013	Button is disabled, because start is inhibited.
5014	Button is disabled, because drive is faulted.
5015	Button is disabled, because local mode lock is on.
5018	Parameter default value can't be found.
5019	Writing a non-zero value is prohibited (can only write a zero value).
5020	Group or parameter does not exist or parameter value is inconsistent.
5021	Group or parameter is hidden.
5022	Group or parameter is write protected.
5023	Modification is not allowed while the drive is running.
5024	Drive is busy, try again.
5025	Write is not allowed while upload or download is in progress.
5026	Value is at or below low limit.
5027	Value is at or above high limit.
5028	Value is invalid – doesn't match any values in the discrete values list.
5029	Memory is not ready, try again.
5030	Request is invalid.
5031	Drive is not ready, e.g due to low DC voltage.
5032	Parameter error was detected.
5040	Selected parameter set can't be found in the current parameter backup.
5041	Parameter backup doesn't fit into memory.
5042	Selected parameter set can't be found in the current parameter backup.
5043	No start inhibit was granted.
5044	Parameter backup versions do not match.

Code	Description
5050	Parameter upload was aborted.
5051	File error was detected.
5052	Parameter upload attempt has failed.
5060	Parameter download was aborted.
5062	Parameter download attempt has failed.
5070	Panel backup memory write error was detected.
5071	Panel backup memory read error was detected.
5080	Operation is not allowed, because the drive is not in local mode.
5081	Operation is not allowed, because a fault is active.
5083	Operation is not allowed, because parameter lock is not open.
5084	Operation is not allowed, because drive is busy, try again.
5085	Download is not allowed, because drive types are incompatible.
5086	Download is not allowed, because drive models are incompatible.
5087	Download is not allowed, because parameter sets do not match.
5088	Operation failed, because a drive memory error was detected.
5089	Download failed, because a CRC error was detected.
5090	Download failed, because a data processing error was detected.
5091	Operation failed, because a parameter error was detected.
5092	Download failed, because parameter sets do not match.

Maintenance

WARNING! Read chapter *Safety* on page *5* before performing any maintenance on the equipment. Ignoring the safety instructions can cause injury or death.

Maintenance intervals

If installed in an appropriate environment, the drive requires very little maintenance. This table lists the routine maintenance intervals recommended by ABB.

Maintenance	Interval	Instruction
Heatsink temperature check and cleaning	Depends on the dustiness of the environment (every 6…12 months)	See *Heatsink* on page *255*.
Main cooling fan replacement	Every six years	See *Main fan replacement* on page *256*.
Internal enclosure cooling fan replacement (IP54 / UL type 12 drives)	Every three years.	See *Internal enclosure fan replacement* on *257*.
Capacitor reforming	Every year when stored	See *Reforming* on page *258*.
Capacitor replacement (frame sizes R5 and R6)	Every nine to ten years	See *Replacement* on page *258*.
Replace battery in the Assistant Control Panel	Every ten years	See *Battery* on page *258*.

Heatsink

The heatsink fins accumulate dust from the cooling air. Since a dusty heatsink is less efficient at cooling the drive, overtemperature faults become more likely. In a "normal" environment (not dusty, not clean) check the heatsink annually, in a dusty environment check more often.

Clean the heatsink as follows (when necessary):

1. Remove power from drive.
2. Remove the cooling fan (see section *Main fan replacement* on page *256*).
3. Blow clean compressed air (not humid) from bottom to top and simultaneously use a vacuum cleaner at the air outlet to trap the dust.

Note: If there is a risk of the dust entering adjoining equipment, perform the cleaning in another room.

4. Reinstall the cooling fan.
5. Restore power.

Main fan replacement

The drive's main cooling fan has a life span of about 60 000 operating hours at maximum rated operating temperature and drive load. The expected life span doubles for each 10 °C (18 °F) drop in the fan temperature (fan temperature is a function of ambient temperatures and drive loads).

Fan failure can be predicted by the increasing noise from fan bearings and the gradual rise in the heatsink temperature in spite of heatsink cleaning. If the drive is operated in a critical part of a process, fan replacement is recommended once these symptoms start appearing. Replacement fans are available from ABB. Do not use other than ABB specified spare parts.

Frame sizes R1...R4

To replace the fan:

1. Remove power from drive.
2. Remove drive cover.
3. For frame size:
   - R1, R2: Press together the retaining clips on the fan cover sides, and lift.
   - R3, R4: Press in on the lever located on the left side of the fan mount, and rotate the fan up and out.
4. Disconnect the fan cable.
5. Install the fan in reverse order.
6. Restore power.

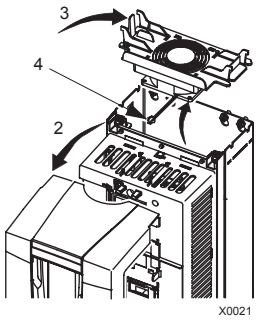

Frame sizes R5 and R6

To replace the fan:

1. Remove power from drive.
2. Remove the screws attaching the fan.
3. Remove the fan:
   - R5: Swing the fan out on its hinges.
   - R6: Pull the fan out.
4. Disconnect the fan cable.
5. Install the fan in reverse order.
6. Restore power.

Arrows in the fan show the directions of the rotation and air flow.

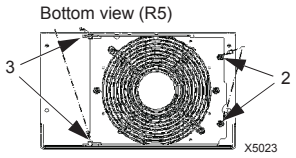

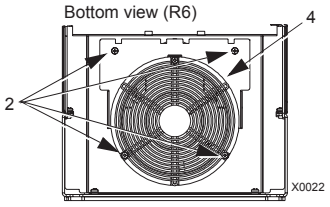

Internal enclosure fan replacement

IP54 / UL type 12 enclosures have an additional internal fan to circulate air inside the enclosure.

Frame sizes R1…R4

To replace the internal enclosure fan in frame sizes R1 to R3 (located at the top of the drive) and R4 (located in front of the drive):

1. Remove power from drive.
2. Remove the front cover.
3. The housing that holds the fan in place has barbed retaining clips at each corner. Press all four clips toward the center to release the barbs.
4. When the clips/barbs are free, pull the housing up to remove from the drive.
5. Disconnect the fan cable.
6. Install the fan in reverse order, noting that:
   - The fan air flow is up (refer to the arrow on fan).
   - The fan wire harness is toward the front.
   - The notched housing barb is located in the right-rear corner.
   - The fan cable connects just forward of the fan at the top of the drive.

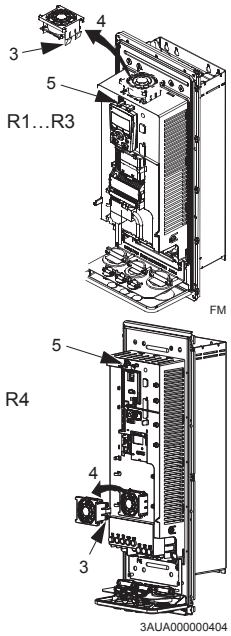

Frame sizes R5 and R6

To replace the internal enclosure fan in frame sizes R5 or R6:

1. Remove power from drive.
2. Remove the front cover.
3. Lift the fan out and disconnect the cable.
4. Install the fan in reverse order.
5. Restore power.

Capacitors

Reforming

The drive DC link capacitors need to be reformed (re-aged) if the drive has been non-operational for more than one year. Without reforming, capacitors may be damaged when the drive starts to operate. It is therefore recommended to reform the capacitors once a year. See section *Serial number* on page *13* for how to check the date of manufacture from the serial number shown on the drive labels.

For information on reforming the capacitors, refer to *Guide for Capacitor Reforming in ACS50/150/350/550* [3AFE68735190 (English)], available on the Internet (go to www.abb.com and enter the code in the Search field).

Replacement

The drive intermediate circuit employs several electrolytic capacitors. Their life span is from 35 000...90 000 hours depending on drive loading and ambient temperature. Capacitor life can be prolonged by lowering the ambient temperature.

It is not possible to predict a capacitor failure. Capacitor failure is usually followed by a input power fuse failure or a fault trip. Contact ABB if capacitor failure is suspected. Replacements for frame size R5 and R6 are available from ABB. Do not use other than ABB specified spare parts.

Control panel

Cleaning

Use a soft damp cloth to clean the control panel. Avoid harsh cleaners which could scratch the display window.

Battery

A battery is only used in Assistant Control Panels that have the clock function available and enabled. The battery keeps the clock operating in memory during power interruptions.

The expected life for the battery is greater than ten years. To remove the battery, use a coin to rotate the battery holder on the back of the control panel. Replace the battery with type CR2032.

Note: The battery is NOT required for any control panel or drive function, except the clock.

Technical data

Ratings

By type code, the table below provides ratings for the ACS550 adjustable speed AC drive, including:

- IEC ratings
- NEMA ratings (shaded columns)
- frame size.

Ratings, 208…240 V drives

Abbreviated column headers are described in section *Symbols* on page *261*.

Type code	Normal use			Heavy-duty use			Frame size
ACS550-x1- see below	I_{2N} A	P_N kW	P_N hp	I_{2hd} A	P_{hd} kW	P_{hd} hp	
Three-phase supply voltage, 208…240 V							
-04A6-2	4.6	0.75	1	3.5	0.55	0.75	R1
-06A6-2	6.6	1.1	1.5	4.6	0.75	1	R1
-07A5-2	7.5	1.5	2	6.6	1.1	1.5	R1
-012A-2	11.8	2.2	3	7.5	1.5	2	R1
-017A-2	16.7	4	5	11.8	2.2	3	R1
-024A-2	24.2	5.5	7.5	16.7	4	5	R2
-031A-2	30.8	7.5	10	24.2	5.5	7.5	R2
-046A-2	46.2	11	15	30.8	7.5	10	R3
-059A-2	59.4	15	20	46.2	11	15	R3
-075A-2	74.8	18.5	25	59.4	15	20	R4
-088A-2	88.0	22	30	74.8	18.5	25	R4
-114A-2	114	30	40	88.0	22	30	R4
-143A-2	143	37	50	114	30	40	R6
-178A-2	178	45	60	150	37	50	R6
-221A-2	221	55	75	178	45	60	R6
-248A-2	248	75	100	192	55	75	R6

00467918.xls B

Ratings, 380…480 V drives

Abbreviated column headers are described in section *Symbols* on page *261*.

Type code	Normal use			Heavy-duty use			Frame size
ACS550-x1- see below	I_{2N} A	P_N kW	P_N hp	I_{2hd} A	P_{hd} kW	P_{hd} hp	
Three-phase supply voltage, **380**…**480 V**							
-03A3-4	3.3	1.1	1.5	2.4	0.75	1	R1
-04A1-4	4.1	1.5	2	3.3	1.1	1.5	R1
-05A4-4	5.4	2.2	Note 1	4.1	1.5	Note 1	R1
-06A9-4	6.9	3	3	5.4	2.2	3	R1
-08A8-4	8.8	4	5	6.9	3	3	R1
-012A-4	11.9	5.5	7.5	8.8	4	5	R1
-015A-4	15.4	7.5	10	11.9	5.5	7.5	R2
-023A-4	23	11	15	15.4	7.5	10	R2
-031A-4	31	15	20	23	11	15	R3
-038A-4	38	18.5	25	31	15	20	R3
-044A-4 (Note 3)	44	22	30	38	18.5	25	R4
-045A-4 (Note 3)	45	22	30	38	18.5	25	R3
-059A-4	59	30	40	44	22	30	R4
-072A-4	72	37	50	59	30	40	R4
-077A-4 (Note 4)	77	Note 2	60	65	Note 2	50	R5
-078A-4 (Note 4)	77	Note 2	60	72	Note 2	50	R4
-087A-4 (Note 5)	87	45	Note 1	77	37	Note 1	R4
-096A-4 (Note 5)	96	45	75	77	37	60	R5
-097A-4	97	Note 2	75	77	Note 2	60	R4
-124A-4 (Note 6)	124	55	100	96	45	75	R6
-125A-4 (Note 6)	125	55	100	96	45	75	R5
-157A-4	157	75	125	124	55	100	R6
-180A-4	180	90	150	156	75	125	R6
-195A-4	195	110	Note 1	162	90	Note 1	R6
-246A-4	245	132	200	192	110	150	R6

00467918.xls B

1. Not available in ACS550-U1 series.
2. Not available in ACS550-01 series.
3. The ACS550-01-045A-4 (an R3 frame size) replaces the ACS550-01-044A-4 (discontinued in 2007).
4. The ACS550-U1-078A-4 (an R4 frame size) replaces the ACS550-U1-077A-4 (discontinued in 2007).
5. The ACS550-01-087A-4 (an R4 frame size) replaces the ACS550-01-096A-4 (discontinued in 2007).
6. The ACS550-01-125A-4 (an R5 frame size) replaces the ACS550-01-124-4 (discontinued in 2007).

Ratings, 500…600 V drives

Abbreviated column headers are described in section *Symbols* on page *261*.

Type code	Normal use			Heavy-duty use			Frame size
ACS550-U1- see below	I_{2N} A	P_N kW	P_N hp	I_{2hd} A	P_{hd} kW	P_{hd} hp	
Three-phase supply voltage, **500**…**600 V** (Note 1)							
-02A7-6	2.7	1.5	2	2.4	1.1	1.5	R2
-03A9-6	3.9	2.2	3	2.7	1.5	2	R2
-06A1-6	6.1	4	5	3.9	2.2	3	R2
-09A0-6	9.0	5.5	7.5	6.1	4	5	R2
-011A-6	11	7.5	10	9.0	5.5	7.5	R2
-017A-6	17	11	15	11	7.5	10	R2
-022A-6	22	15	20	17	11	15	R3
-027A-6	27	18.5	25	22	15	20	R3
-032A-6	32	22	30	27	18.5	25	R4
-041A-6	41	30	40	32	22	30	R4
-052A-6	52	37	50	41	30	40	R4
-062A-6	62	45	60	52	37	50	R4
-077A-6	77	55	75	62	45	60	R6
-099A-6	99	75	100	77	55	75	R6
-125A-6	125	90	125	99	75	100	R6
-144A-6	144	110	150	125	90	125	R6

00467918.xls B

1. Not available in ACS550-01 series.

Symbols

Typical ratings:

Normal use (10% overload capability)

I_{2N} continuous rms current. 10% overload is allowed for one minute in ten minutes.

P_N typical motor power in normal use. The kilowatt power ratings apply to most IEC, 4-pole motors. The horsepower ratings apply to most 4-pole NEMA motors.

Heavy-duty use (50% overload capability)

I_{2hd} continuous rms current. 50% overload is allowed for one minute in ten minutes.

P_{hd} typical motor power in heavy duty use. The kilowatt power ratings apply to most IEC, 4-pole motors. The horsepower ratings apply to most 4-pole NEMA motors.

Sizing

The current ratings are the same regardless of the supply voltage within one voltage range. To achieve the rated motor power given in the table, the rated current of the drive must be higher than or equal to the rated motor current. Also note that:

- the ratings apply for ambient temperature of 40 °C (104 °F)
- the maximum allowed motor shaft power is limited to $1.5 \cdot P_{hd}$. If the limit is exceeded, motor torque and current are automatically restricted. The function protects the input bridge of the drive against overload.

Derating

The load capacity (current and power) decreases for certain situations, as defined below. In such situations, where full motor power is required, oversize the drive so that the derated value provides sufficient capacity.

For example, if your application requires 15.4 A of motor current and a 8 kHz switching frequency, calculate the appropriate drive size requirement as follows:

The minimum size required = 15.4 A / 0.80 = 19.25 A

Where: 0.80 is the derating for 8 kHz switching frequency (see section *Switching frequency derating* on page *262*).

Referring to I_{2N} in the ratings tables (starting from page *259*), the following drives exceed the I_{2N} requirement of 19.25 A: ACS550-x1-023A-4, or ACS550-x1-024A-2.

Temperature derating

In the temperature range +40 °C...50 °C (+104 °F...122 °F), the rated output current is decreased 1% for every 1 °C (1.8 °F) above +40 °C (+104 °F). Calculate the output current by multiplying the current given in the rating table by the derating factor.

Example If the ambient temperature is 50 °C (+122 °F), the derating factor is 100% - 1%/°C × 10 °C = 90% or 0.90.
The output current is then 0.90 × I_{2N} or 0.90 × I_{2hd}.

Altitude derating

In altitudes 1000...4000 m (3300...13,200 ft) above sea level, the derating is 1% for every 100 m (330 ft). If the installation site is higher than 2000 m (6600 ft) above sea level, please contact your local ABB distributor or office for further information.

Single phase supply derating

For 208…240 V series drives, a single phase supply can be used. In that case, the derating is 50%.

Switching frequency derating

When using the 8 kHz switching frequency (parameter 2606), either:

- Derate P_N/P_{hd} and I_{2N}/I_{2hd} to 80% or
- Set parameter 2607 SWITCH FREQ CTRL = 1 (ON) which allows the drive to reduce the switching frequency if/when the drive's internal temperature exceeds 90 °C. See the parameter description for 2607 for details.

When using the 12 kHz switching frequency (parameter 2606), either:

- Derate P_N/P_{hd} and I_{2N}/I_{2hd} to 65% (to 50% for 600 V, R4 frame sizes, that is for ACS550-U1-032A-6 … ACS550-U1-062A-6),
  and derate ambient temperature maximum to 30 °C (86 °F),
  and note that the current is limited to a maximum value of I_{2hd}, or
- Set parameter 2607 SWITCH FREQ CTRL = 1 (ON) which allows the drive to reduce the switching frequency if/when the drive's internal temperature exceeds 80 °C. See the parameter description for 2607 for details.

Input power connections

WARNING! Do not operate the drive outside the nominal input line voltage range. Overvoltage can result in permanent damage to the drive.

Input power specifications

Input power (mains) connection specifications	
Voltage (U_1)	208/220/230/240 V AC 3-phase (or 1-phase) -15%…+10% for ACS550-x1-xxxx-2. 400/415/440/460/480 V AC 3-phase -15%…+10% for ACS550-x1-xxxx-4. 500/525/575/600 V AC 3-phase -15%…+10% for ACS550-U1-xxxx-6.
Prospective short-circuit current (IEC 629)	Maximum allowed prospective short-circuit current in the supply is 100 kA providing that the input power cable of the drive is protected with appropriate fuses. US: 100 000 AIC.
Frequency	48…63 Hz
Imbalance	Max. ± 3% of nominal phase to phase input voltage
Fundamental power factor (cos phi$_1$)	0.98 (at nominal load)
Cable temperature rating	90 °C (194 °F) rating minimum

Disconnecting device for isolation

Install a hand-operated input disconnecting device (disconnecting means) between the AC power source and the drive. The disconnecting device must be of a type that can be locked to the open position for installation and maintenance work.

- **Europe**: To meet the European Union Directives, according to standard EN 60204-1, Safety of Machinery, the disconnecting device must be one of the following types:
  - a switch-disconnector of utilization category AC-23B (EN 60947-3)
  - a disconnector having an auxiliary contact that in all cases causes switching devices to break the load circuit before the opening of the main contacts of the disconnector (EN 60947-3)
  - a circuit breaker suitable for isolation in accordance with EN 60947-2.
- **Other regions**: The disconnecting device must conform to the applicable safety regulations.

Fuses

Branch circuit protection must be provided by the end user and sized per national and local electric codes. The following tables provide fuse recommendations for short circuit protection on the drive's input power.

Fuses, 208…240 V drives

ACS550-x1- see below	Input current A	Input power (mains) fuses		
		IEC 269 gG (A)	UL Class T (A)	Bussmann type
-04A6-2	4.6	10	10	JJS-10
-06A6-2	6.6			
-07A5-2	7.5			
-012A-2	11.8	16	15	JJS-15
-017A-2	16.7	25	25	JJS-25
-024A-2	24.2		30	JJS-30
-031A-2	30.8	40	40	JJS-40
-046A-2	46.2	63	60	JJS-60
-059A-2	59.4		80	JJS-80
-075A-2	74.8	80	100	JJS-100
-088A-2	88.0	100	110	JJS-110
-114A-2	114	125	150	JJS-150
-143A-2	143	200	200	JJS-200
-178A-2	178	250	250	JJS-250
-221A-2	221	315	300	JJS-300
-248A-2	248		350	JJS-350

00467918.xls B

Fuses, 380…480 V drives

ACS550-x1- see below	Input current A	Input power (mains) fuses		
		IEC 269 gG (A)	UL Class T (A)	Bussmann type
-03A3-4	3.3	10	10	JJS-10
-04A1-4	4.1			
-05A4-4	5.4			
-06A9-4	6.9			
-08A8-4	8.8		15	JJS-15
-012A-4	11.9	16		
-015A-4	15.4		20	JJS-20
-023A-4	23	25	30	JJS-30
-031A-4	31	35	40	JJS-40
-038A-4	38	50	50	JJS-50
-044A-4	44		60	JJS-60
-045A-4	45			
-059A-4	59	63	80	JJS-80
-072A-4	72	80	90	JJS-90
-077A-4	77		100	JJS-100
-078A-4	77			
-087A-4	87	125	125	JJS-125
-096A-4	96			
-097A-4	97			

ACS550-x1- see below	Input current A	Input power (mains) fuses		
		IEC 269 gG (A)	UL Class T (A)	Bussmann type
-124A-4	124	160	175	JJS-175
-125A-4	125			
-157A-4	157	200	200	JJS-200
-180A-4	180	250	250	JJS-250
-195A-4	195			
-246A-4	245		350	JJS-350

00467918.xls B

Fuses, 500…600 V drives

ACS550-U1- see below	Input current A	Input power (mains) fuses		
		IEC 269 gG (A)	UL Class T (A)	Bussmann type
-02A7-6	2.7	10	10	JJS-10
-03A9-6	3.9			
-06A1-6	6.1			
-09A0-6	9.0	16	15	JJS-15
-011A-6	11.0			
-017A-6	17.0	25	25	JJS-25
-022A-6	22.0			
-027A-6	27	35	40	JJS-40
-032A-6	32			
-041A-6	41	50	50	JJS-50
-052A-6	52	60	60	JJS-60
-062A-6	62	80	80	JJS-80
-077A-6	77		100	JJS-100
-099A-6	99	125	150	JJS-150
-125A-6	125	160	175	JJS-175
-144A-6	144	200	200	JJS-200

00467918.xls B

Emergency stop devices

The overall design of the installation must include emergency stop devices and any other safety equipment that may be needed. Pressing STOP on the drive's control panel does NOT:

- generate an emergency stop of the motor
- separate the drive from dangerous potential.

Input power cables/wiring

Input wiring can be any of:

- a four conductor cable (three phases and ground/protective earth). Shielding is not required.
- four insulated conductors routed through conduit.

Size wiring according to local safety regulations, appropriate input voltage and the drive's load current. In any case, the conductor must be less than the maximum limit defined by the terminal size (see section *Drive's power connection terminals* on page *268*).

The table below lists copper and aluminium cable types for different load currents. These recommendations apply only for the conditions listed at the top of the table.

IEC					NEC	
Based on: • EN 60204-1 and IEC 60364-5-2/2001 • PVC insulation • 30 °C (86 °F) ambient temperature • 70 °C (158 °F) surface temperature • cables with concentric copper shield • not more than nine cables laid on cable ladder side by side.					Based on: • NEC Table 310-16 for copper wires • 90 °C (194 °F) wire insulation • 40 °C (104 °F) ambient temperature • not more than three current-carrying conductors in raceway or cable, or earth (directly buried) • copper cables with concentric copper shield.	
Max. load current A	**Cu cable mm²**		**Max. load current A**	**Al cable mm²**	**Max. load current A**	**Cu wire size AWG/kcmil**
14	3×1.5		Aluminium cable cannot be used with frame sizes R1…R5 because of its lower capacity.		22.8	14
20	3×2.5				27.3	12
27	3×4				36.4	10
34	3×6				50.1	8
47	3×10				68.3	6
62	3×16				86.5	4
79	3×25				100	3
98	3×35		91	3×50	118	2
119	3×50		117	3×70	137	1
153	3×70		143	3×95	155	1/0
186	3×95		165	3×120	178	2/0
215	3×120		191	3×150	205	3/0
249	3×150		218	3×185	237	4/0
284	3×185		257	3×240	264	250 MCM or 2 × 1
			274	3× (3×50)	291	300 MCM or 2 × 1/0
			285	2× (3×95)	319	350 MCM or 2 × 2/0

Ground connections

For personnel safety, proper operation and reduction of electromagnetic emission/ pick-up, the drive and the motor must be grounded at the installation site.

- Conductors must be adequately sized as required by safety regulations.
- Power cable shields must be connected to the drive PE terminal in order to meet safety regulations.

- Power cable shields are suitable for use as equipment grounding conductors only when the shield conductors are adequately sized as required by safety regulations.
- In multiple drive installations, do not connect drive terminals in series.

Corner grounded TN systems

WARNING! Do not attempt to install or remove EM1, EM3, F1 or F2 screws while power is applied to the drive's input terminals.

Corner grounded TN systems are defined in the following table. In such systems, disconnect the internal ground connection by removing the screws (do this also if the grounding configuration of the system is unknown):

- ACS550-01, frame sizes R1…R4: Remove both the EM1 and EM3 screws (see section *Power connection diagrams* on page *20*).
- ACS550-U1, frame sizes R1…R4: Remove the EM1 screw – drive is shipped with EM3 removed (see section *Power connection diagrams* on page *20*).
- Frame sizes R5…R6: Remove both the F1 and F2 screws (see section *Power connection diagrams*, page *21*).

Corner grounded TN systems – EM1, EM3, F1 and F2 must be out			
Grounded at the corner of the delta	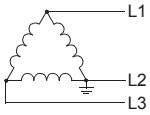	Grounded at the mid point of a delta leg	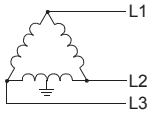
Single phase, grounded at an end point	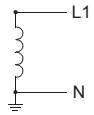	Three phase "Variac" without solidly grounded neutral	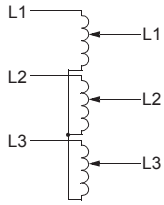

The screws (M4×16) make an internal ground connection that reduces electro-magnetic emission. Where EMC (electro-magnetic compatibility) is a concern, and the system is symmetrically grounded, the screws may be installed. For reference, the diagram on the right illustrates a symmetrically grounded TN system.

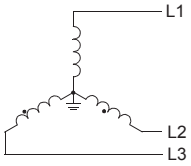

IT systems

WARNING! Do not attempt to install or remove EM1, EM3, F1 or F2 screws while power is applied to the drive's input terminals.

For IT systems [an ungrounded power system or a high resistance-grounded (over 30 ohm) power system]:

- Disconnect the ground connection to the internal EMC filters:
  - ACS550-01, frame sizes R1…R4: Remove both the EM1 and EM3 screws (see section *Power connection diagrams* on page *20*).
  - ACS550-U1, frame sizes R1…R4: Remove the EM1 screw – drive is shipped with EM3 removed (see section *Power connection diagrams* on page *20*).
  - Frame sizes R5…R6: Remove both the F1 and F2 screws (see section *Power connection diagrams*, page *21*).
- Where EMC requirements exist, check for excessive emission propagated to neighboring low voltage networks. In some cases, the natural suppression in transformers and cables is sufficient. If in doubt, use a supply transformer with static screening between the primary and secondary windings.
- Do NOT install an external RFI/EMC filter. Using an EMC filter grounds the input power through the filter capacitors, which could be dangerous and could damage the drive.

Drive's power connection terminals

The following table provides specifications for the drive's power connection terminals.

Frame size	U1, V1, W1 U2, V2, W2 BRK+, UDC+ terminals				Earthing PE terminal			
	Max. terminal size		Torque		Max. terminal size		Torque	
	mm^2	AWG	N·m	lb-ft	mm^2	AWG	N·m	lb-ft
R1[1]	6	8	1.4	1	4	10	1.4	1
R2[1]	10	6	1.4	1	10	8	1.4	1
R3[1]	25	3	1.8	1.3	16	6	1.8	1.3
R4[1]	50	1/0	2	1.5	35	2	2	2
R5[1]	70	2/0	15	11	70	2/0	15	11
R6	185	350 MCM	40	30	95	4/0	8	6

00467918.xls B

[1] Aluminium cable cannot be used with frame sizes R1…R5 because of its lower capacity.

Power terminal considerations – R6 frame size

WARNING! For R6 power terminals, if screw-on terminal lugs are supplied, they can only be used for wire sizes that are 95 mm^2 (3/0 AWG) or larger. Smaller wires will loosen and may damage the drive. They require crimp-on ring lugs as described below.

Crimp-on ring lugs

On the R6 frame size, if screw-on terminal lugs are supplied but the cable size used is less than 95 mm^2 (3/0 AWG), or if no screw-on terminal lugs are supplied at all, use crimp-on ring lugs according to the following procedure.

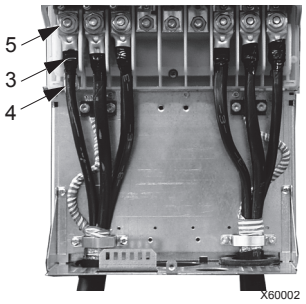

1. Select appropriate ring lugs from the following table.
2. Remove the screw-on terminal lugs, if supplied.
3. Attach the ring lugs to the drive end of the cables.
4. Isolate the ends of the ring lugs with insulating tape or shrink tubing.
5. Attach the ring lugs to the drive.

Wire size		Manufacturer	Ring lug	Crimping tool	No. of crimps
mm^2	kcmil/ AWG				
16	6	Burndy	YAV6C-L2	MY29-3	1
		Ilsco	CCL-6-38	ILC-10	2
25	4	Burndy	YA4C-L4BOX	MY29-3	1
		Ilsco	CCL-4-38	MT-25	1
35	2	Burndy	YA2C-L4BOX	MY29-3	2
		Ilsco	CRC-2	IDT-12	1
		Ilsco	CCL-2-38	MT-25	1
50	1	Burndy	YA1C-L4BOX	MY29-3	2
		Ilsco	CRA-1-38	IDT-12	1
		Ilsco	CCL-1-38	MT-25	1
		Thomas & Betts	54148	TBM-8	3
55	1/0	Burndy	YA25-L4BOX	MY29-3	2
		Ilsco	CRB-0	IDT-12	1
		Ilsco	CCL-1/0-38	MT-25	1
		Thomas & Betts	54109	TBM-8	3

Wire size		Manufacturer	Ring lug	Crimping tool	No. of crimps
mm^2	kcmil/ AWG				
70	**2/0**	Burndy	YAL26T38	MY29-3	2
		Ilsco	CRA-2/0	IDT-12	1
		Ilsco	CCL-2/0-38	MT-25	1
		Thomas & Betts	54110	TBM-8	3
95	**3/0**	Burndy	YAL27T38	MY29-3	2
		Ilsco	CRA-3/0	IDT-12	1
		Ilsco	CCL-3/0-38	MT-25	1
		Thomas & Betts	54111	TBM-8	3
95	**3/0**	Burndy	YA28R4	MY29-3	2
		Ilsco	CRA-4/0	IDT-12	1
		Ilsco	CCL-4/0-38	MT-25	2
		Thomas & Betts	54112	TBM-8	4

Screw-on terminal lugs

Use the following procedure to attach cables if screw-on terminal lugs are supplied and the cable size is 95 mm^2 (3/0 AWG) or larger.

1. Attach the supplied screw-on lugs to the drive end of the cables.
2. Attach screw-on lugs to the drive.

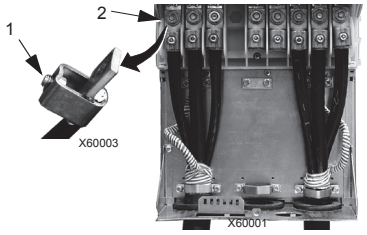

Motor connections

WARNING! Never connect line power to the drive output terminals: U2, V2 or W2. Line voltage applied to the output can result in permanent damage to the drive. If frequent bypassing is required, use mechanically interlocked switches or contactors.

WARNING! Do not connect any motor with a nominal voltage less than one half of the drive's nominal input voltage.

WARNING! Disconnect the drive before conducting any voltage tolerance (Hi-Pot) test or insulation resistance (Megger) test on the motor or motor cables. Do not conduct these tests on the drive.

Motor connection specifications

<table>
<tr><th colspan="2">Motor connection specifications</th></tr>
<tr><td>Voltage (U_2)</td><td>0…U_1, 3-phase symmetrical, U_{max} at the field weakening point</td></tr>
<tr><td>Frequency</td><td>0…500 Hz</td></tr>
<tr><td>Frequency resolution</td><td>0.01 Hz</td></tr>
<tr><td>Current</td><td>See section Ratings on page 259.</td></tr>
<tr><td>Field weakening point</td><td>10…500 Hz</td></tr>
<tr><td>Switching frequency</td><td>Selectable. See the availability in the table below.
<table>
<tr><th></th><th>1, 4 and 8 kHz</th><th>12 kHz</th></tr>
<tr><td>208…240 V</td><td>All types</td><td>Frame sizes R1…R4</td></tr>
<tr><td>380…480 V</td><td>All types, except for ACS550-01-246A-4 only 1 and 4 kHz</td><td>Frame sizes R1…R4, except ACS550-01-087A-4 and ACS550-U1-097A-4</td></tr>
<tr><td>500…600 V</td><td>All types</td><td>Frame sizes R2…R4</td></tr>
</table></td></tr>
<tr><td>Cable temperature rating</td><td>90 °C (194 °F) rating minimum.</td></tr>
<tr><td>Maximum motor cable length</td><td>See sections Motor cable length for 400 V drives on page 272 and Motor cable length for 600 V drives on page 273.</td></tr>
</table>

Motor cable length for 400 V drives

The table below shows the maximum motor cable lengths for 400 V drives with different switching frequencies. Examples for using the table are also given.

Maximum cable length for 400 V drives																		
Frame size	EMC limits												Operational limits					
	Second environment (category C3[1])						First environment (category C2[1])						Basic unit				With du/dt filters	
	1 kHz		4 kHz		8 kHz		1 kHz		4 kHz		8 kHz		1/4 kHz		8/12 kHz			
	m	ft	m	ft	m	ft	m	ft	m	ft	m	ft	m	ft	m	ft	m	ft
R1	300	980	300	980	300	980	300	980	300	980	300	980	100	330	100	330	150	490
R2	300	980	300	980	300	980	300	980	100	330	30	98	200	660	100	330	250	820
R3	300	980	300	980	300	980	300	980	75	245	75	245	200	660	100	330	250	820
R4	300	980	300	980	300	980	300	980	75	245	75	245	200	660	100	330	300	980
R5	100	330	100	330	100	330	100	330	100	330	100	330	300	980	150[2]	490[2]	300	980
R6	100	330	100	330	[3]	[3]	100	330	100	330	[3]	[3]	300	980	150[2]	490[2]	300	980

[1] See the new terms in section *IEC/EN 61800-3 (2004) Definitions* on page *292*.

[2] 12 kHz switching frequency is not available.

[3] Not tested.

Sine filters further extend the cable lengths.

WARNING! Using a motor cable longer than specified in the table above may cause permanent damage to the drive.

Examples for using the table:

Requirements	Checking and conclusions
R1 frame size, 8 kHz fsw, Category C2, 150 m (490 ft) cable	Check operational limits for R1 and 8 kHz -> for a 150 m (490 ft) cable a du/dt filter is needed. Check EMC limits -> EMC requirements for Category C2 are met with a 150 m (490 ft) cable.
R3 frame size, 4 kHz fsw, Category C3, 300 m (980 ft) cable	Check operational limits for R3 and 4 kHz -> a 300 m (980 ft) cable cannot be used even with a du/dt filter. A sine filter must be used and the voltage drop of the cable must be taken into account in the installation. Check EMC limits -> EMC requirements for Category C3 are met with a 300 m (980 ft) cable.
R5 frame size, 8 kHz fsw, Category C3, 150 m (490 ft) cable	Check operational limits for R5 and 8 kHz -> for a 150 m (490 ft) cable the basic unit is sufficient. Check EMC limits -> EMC requirements for Category C3 cannot be met with a 300 m (980 ft) cable. The installation configuration is not possible. An EMC plan is recommended to overcome the situation.
R6 frame size, 4 kHz fsw, EMC limits not applicable, 150 m (490 ft) cable	Check operational limits for R6 and 4 kHz -> for a 150 m (490 ft) cable the basic unit is sufficient. EMC limits do not need to be checked as there are no EMC requirements.

Motor cable length for 600 V drives

The table below shows the maximum motor cable lengths for 600 V drives with different switching frequencies. As the 600 V drives are not CE approved, cable lengths for EMC limits are not given.

Maximum cable length for 600 V drives				
Frame size	Operational limits			
	1/4 kHz		8/12 kHz	
	m	ft	m	ft
R2	100	330	100	330
R3…R4	200	660	100	330
R6	300	980	150[2]	490[2]

[2] 12 kHz switching frequency is not available.

WARNING! Using a motor cable longer than specified in the table above may cause permanent damage to the drive.

Motor thermal protection

According to regulations, the motor must be protected against thermal overload and the current must be switched off when overload is detected. The drive includes a motor thermal protection function that protects the motor and switches off the current when necessary. Depending on a drive parameter value (see *Group 35: MOTOR TEMP MEAS*), the function either monitors a calculated temperature value (based on a motor thermal model) or an actual temperature indication given by motor temperature sensors. The user can tune the thermal model further by feeding in additional motor and load data.

The most common temperature sensors are:

- motor sizes IEC180…225: thermal switch (e.g. Klixon)
- motor sizes IEC200…250 and larger: PTC or PT100.

Ground fault protection

ACS550 internal fault logic detects ground faults in the drive, motor, or motor cable. This fault logic:

- is NOT a personal safety or fire protection feature
- can be disabled using parameter 3017 EARTH FAULT
- could be tripped by leakage currents (input power to ground) associated with long high capacitance motor cables.

Grounding and routing

Motor cable shielding

Motor cables require shielding using conduit, armored cable or shielded cable.

- Conduit – When using conduit:
  - Bridge joints with a ground conductor bonded to the conduit on each side of the joint.
  - Bond conduit run to the drive enclosure.
  - Use a separate conduit run for motor cables (also separate input power and control cables).
  - Use a separate conduit run for each drive.
- Armored cable – When using armored cable:
  - Use six-conductor (3 phases and 3 grounds), type MC continuous corrugated aluminium armor cable with symmetrical grounds.
  - Armored motor cable can share a cable tray with input power cables, but not with control cables.
- Shielded cable – For shielded cable details, see section *Motor cable requirements for CE & C-Tick compliance* on page *274*.

Grounding

See section *Ground connections* on page *266*.

For CE compliant installations and installations where EMC emissions must be minimized, see section *Effective motor cable screens* on page *275*.

Drive's motor connection terminals

The drive's motor and input power terminals have the same specifications. See section *Drive's power connection terminals* on page *268*.

Motor cable requirements for CE & C-Tick compliance

The requirements in this section apply for CE or C-Tick compliance.

Minimum requirement (CE & C-Tick)

The motor cable must be a symmetrical three conductor cable with a concentric PE conductor or a four conductor cable with a concentric shield, however, a symmetrical constructed PE conductor is always recommended. The following figure shows the minimum requirement for the motor cable screen (for example, MCMK, NK Cables).

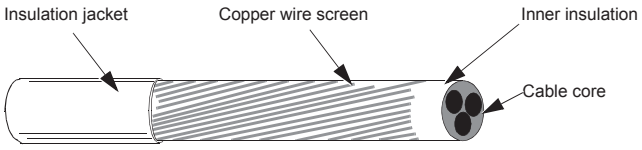

Recommendation for conductor layout

The following figure compares conductor layout features in motor cables.

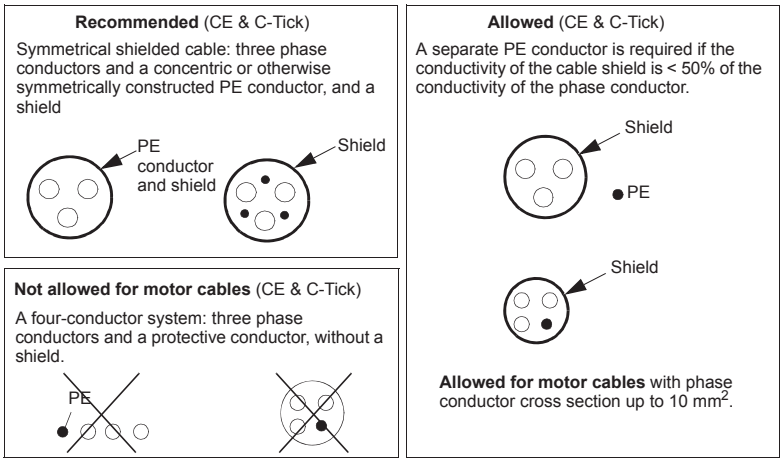

Effective motor cable screens

The general rule for cable screen effectiveness is: the better and tighter the cable's screen, the lower the radiated emission level. The following figure shows an example of an effective construction (for example Ölflex-Servo-FD 780 CP, Lappkabel or MCCMK, NK Cables).

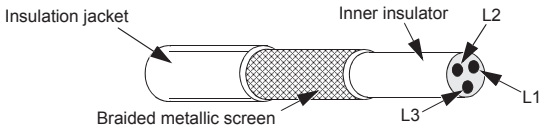

EN 61800-3 compliant motor cables

The most efficient EMC filtering can be achieved by following these rules:

- Motor cables must have an effective screen as described in section *Effective motor cable screens* on page *275*.
- Motor cable screen wires must be twisted together into a bundle (the bundle length must be less than five times its width) and connected it to the terminal marked ⏚ (at the bottom right-hand corner of the drive).
- At the motor end, the motor cable screen must be earthed 360 degrees with an EMC cable gland, or the screen wires must be twisted together into a bundle not longer than five times its width and connected to the PE terminal of the motor.
- See section *Motor cable length for 400 V drives*, columns "*EMC limits*" on page *272* to check the maximum motor cable lengths and the need for filters for 400 V drives for IEC/EN 61800-3 compliance.

WARNING! Do not use RFI/EMC filters on IT systems.

Brake components

Availability

Braking availability for ACS550 drives, by frame size is:

- R1 and R2 – a built-in brake chopper is standard equipment. Add appropriate resistor, as determined using the following section. Resistors are available from ABB.
- R3…R6 – does not include an internal brake chopper. Connect a chopper and a resistor, or a brake unit to the DC link terminals on the drive. Contact your ABB representative for appropriate parts.

Selecting the braking resistors (frame sizes R1 and R2)

Braking resistor must meet three requirements:

- Resistance must be always higher than the minimum value R_{MIN} defined for the drive type in the following tables. Never use resistance below this value.
- Resistance must be low enough to be able to produce the desired braking torque. To achieve the maximum braking torque (the larger of 150% of heavy duty or 110% of nominal duty), the resistance must not exceed R_{MAX}. If maximum braking torque is not necessary, resistor values can exceed R_{MAX}.
- The resistor power rating must be high enough to dissipate the braking power. This requirement involves many factors:
  - the maximum continuous power rating for the resistor(s)
  - the rate at which the resistor changes temperature (resistor thermal time constant)
  - maximum braking time ON – If the regeneration (braking) power is larger than the resistor rated power, there is a limit to the ON time, or the resistor overheats before the OFF period begins.
  - minimum braking time OFF – If the regeneration (braking) power is larger than the resistor rated power, the OFF time must be large enough for the resistor to cool between ON periods.

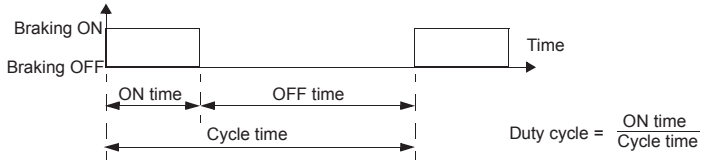

  - the peak braking power requirement
  - type of braking (deceleration to zero vs. overhauling load) – During deceleration to zero, the generated power steadily decreases, averaging half of the peak power. For an overhauling load, the braking is countering an external force (gravity for example) and the braking power is constant. The total heat generated from an overhauling load is double the heat generated from deceleration to zero speed (for the same peak torque and ON time).

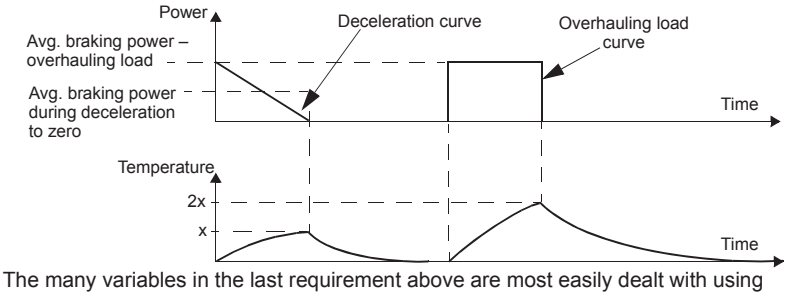

The many variables in the last requirement above are most easily dealt with using the following tables.

- First, determine your maximum braking time ON (ON_{MAX}), minimum braking time OFF (OFF_{MIN}) and load type (deceleration or overhauling load).
- Calculate duty cycle:

$$\text{Duty cycle} = \frac{ON_{MAX}}{(ON_{MAX} + OFF_{MIN})} \cdot 100\%$$

- In the appropriate table, find the column that best matches your data:
  - $ON_{MAX} \leq$ column specification and
  - Duty cycle $\leq$ column specification
- Find the row that matches your drive.
- The minimum power rating for deceleration to zero is the value in the selected row/column.
- For overhauling loads, double the rating in the selected row/column, or use the "Continuous ON" column.

208…240 V drives

Type code ACS550-01/U1- see below	Resistance		Resistor[1] minimum continuous power rating				
			Deceleration-to-zero rating				P_{rcont} Continuous ON > 60 s ON > 25% Duty
	R_{MAX}	R_{MIN}	P_{r3} ≤ 3 s ON ≥ 27 s OFF ≤ 10% Duty	P_{r10} ≤ 10 s ON ≥ 50 s OFF ≤ 17% Duty	P_{r30} ≤ 30 s ON ≥ 180 s OFF ≤ 14% Duty	P_{r60} ≤ 60 s ON ≥ 180 s OFF ≤ 25% Duty	
	ohm	ohm	W	W	W	W	W
Three-phase supply voltage, **208…240 V**							
-04A6-2	234	80	45	80	120	200	1100
-06A6-2	160	80	65	120	175	280	1500
-07A5-2	117	44	85	160	235	390	2200
-012A-2	80	44	125	235	345	570	3000
-017A-2	48	44	210	390	575	950	4000
-024A-2	32	30	315	590	860	1425	5500
-031A-2	23	22	430	800	1175	1940	7500

[1] Resistor time constant specification must be ≥ 85 seconds.

380…480 V drives

Type code ACS550-01/U1- see below	Resistance		Resistor[1] minimum continuous power rating				
			Deceleration-to-zero rating				P_{rcont} Continuous ON > 60 s ON > 25% Duty
	R_{MAX}	R_{MIN}	P_{r3} ≤ 3 s ON ≥ 27 s OFF ≤ 10% Duty	P_{r10} ≤ 10 s ON ≥ 50 s OFF ≤ 17% Duty	P_{r30} ≤ 30 s ON ≥ 180 s OFF ≤ 14% Duty	P_{r60} ≤ 60 s ON ≥ 180 s OFF ≤ 25% Duty	
	ohm	ohm	W	W	W	W	W
Three-phase supply voltage, **380**…**480 V**							
-03A3-4	641	120	65	120	175	285	1100
-04A1-4	470	120	90	160	235	390	1500
-05A4-4	320	120	125	235	345	570	2200
-06A9-4	235	80	170	320	470	775	3000
-08A8-4	192	80	210	400	575	950	4000
-012A-4	128	80	315	590	860	1425	5500
-015A-4	94	63	425	800	1175	1950	7500
-023A-4	64	63	625	1175	1725	2850	11000

[1] Resistor time constant specification must be ≥ 85 seconds.

500…600 V drive

Type code ACS550-U1- see below	Resistance		Resistor[1] minimum continuous power rating				
			Deceleration-to-zero rating				P_{rcont} Continuous ON > 60 s ON > 25% Duty
	R_{MAX}	R_{MIN}	P_{r3} ≤ 3 s ON ≥ 27 s OFF ≤ 10% Duty	P_{r10} ≤ 10 s ON ≥ 50 s OFF ≤ 17% Duty	P_{r30} ≤ 30 s ON ≥ 180 s OFF ≤ 14% Duty	P_{r60} ≤ 60 s ON ≥ 180 s OFF ≤ 25% Duty	
	ohm	ohm	W	W	W	W	W
Three-phase supply voltage, **500…600 V**							
-02A7-6	548	80	93	175	257	425	1462
-03A9-6	373	80	137	257	377	624	2144
-06A1-6	224	80	228	429	629	1040	3573
-09A0-6	149	80	342	643	943	1560	5359
-011A-6	110	60	467	877	1286	2127	7308
-017A-6	75	60	685	1286	1886	3119	10718

[1] Resistor time constant specification must be ≥ 85 seconds.

WARNING! Never use a brake resistor with a resistance below the minimum value specified for the particular drive. The drive and the internal chopper are not able to handle the overcurrent caused by the low resistance.

Symbols

R_{MIN} – Minimum allowed resistance of the braking resistor.

R_{MAX} – Maximum resistance allowed if maximum braking torque is necessary.

P_{rx} – Duty-cycle based resistor power rating in deceleration braking, where "x" is ON_{MAX} time.

Installing and wiring resistors

All resistors must be installed outside the drive module in a place where they can dissipate heat.

WARNING! The surface temperature of the resistor is very high, and air flowing from the resistor is very hot. Materials near the brake resistor must be non-flammable. Provide protection from accidental contact with the resistor.

To ensure that the input fuses protect the resistor cable, use resistor cables with the same rating as used for the power input to the drive.

The maximum length of the resistor cable(s) is 10 m (33 ft). See section *Power connection diagrams* on page *20* for the resistor cable connection points.

Mandatory circuit protection

The following setup is essential for safety – it interrupts the main supply in fault situations involving chopper shorts:

- Equip the drive with a main contactor.
- Wire the contactor so that it opens if the resistor thermal switch opens (an overheated resistor opens the contactor).

Below is a simple wiring diagram example.

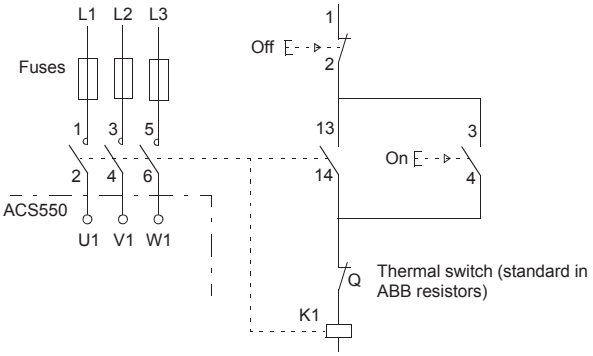

Parameter set-up

To enable dynamic braking, switch off the drive's overvoltage control [Set parameter 2005 = 0 (DISABLE)].

Control connections

Control connection specifications

Control connection specifications	
Analog inputs and outputs	See section *Control terminals table* on page *22*.
Digital inputs	Digital input impedance 1.5 kohm. Maximum voltage for digital inputs is 30 V.
Relays (digital outputs)	• Max. contact voltage: 30 V DC, 250 V AC • Max. contact current / power: 6 A, 30 V DC; 1500 VA, 250 V AC • Max. continuous current: 2 A rms (cos φ = 1), 1 A rms (cos φ = 0.4) • Minimum load: 500 mW (12 V, 10 mA) • Contact material: Silver-nickel (AgN) • Isolation between relay digital outputs, test voltage: 2.5 kV rms, 1 minute
Cable specifications	See section *Control terminals table* on page *22*.

Control cables

General recommendations

Use multi-core cables with a braided copper wire screen, temperature rated at 60 °C (140 °F) or above:

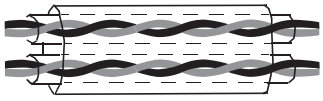

Double shielded
Example: JAMAK by Draka NK Cables

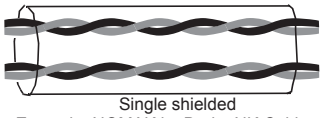

Single shielded
Example: NOMAK by Draka NK Cables

At the drive end, twist the screen together into a bundle not longer than five times its width and connected to terminal X1-1 (for digital and analog I/O cables) or to either X1-28 or X1-32 (for RS485 cables). Leave the other end of the cable shield unconnected.

Route control cables to minimize radiation to the cable:

- Route as far away as possible from the input power and motor cables [at least 20 cm (8 in)].
- Where control cables must cross power cables, make sure they are at an angle as near 90° as possible.
- Stay at least 20 cm (8 in) from the sides of the drive.

Use care in mixing signal types on the same cable:

- Do not mix relay-controlled signals using more than 30 V and other control signals in the same cable.
- Run relay-controlled signals as twisted pairs (especially if voltage > 48 V). Relay-controlled signals using less than 48 V can be run in the same cables as digital input signals.

Note: Never mix 24 V DC and 115/230 V AC signals in the same cable.

Analog cables

Recommendations for analog signal runs:

- Use double shielded, twisted pair cable.
- Use one individually shielded pair for each signal.
- Do not use a common return for different analog signals.

Digital cables

Recommendation for digital signal runs: A double shielded cable is the best alternative, but single-shielded, twisted, multi-pair cable is also usable.

Control panel cable

If the control panel is connected to the drive with a cable, use only Category 5 Patch ethernet cable. The maximum length that is tested to meet EMC specifications is 3 m (9.8 ft). Longer cables are susceptible to electromagnetic noise and must be user-tested to verify that EMC requirements are met. Where long runs are required [especially for runs longer than about 12 m (40 ft)], use a RS232/RS485 converter at each end and run RS485 cable.

Drive's control connection terminals

The following table provides specifications for the drive's control terminals

Frame size	Control			
	Maximum wire size [1]		Torque	
	mm^2	AWG	N·m	lb-ft
All	1.5	16	0.4	0.3

[1] Values given for solid wires.
For stranded wires, the maximum size is 1 mm^2.

Efficiency

Approximately 98% at nominal power level.

Cooling

Cooling specifications	
Method	Internal fan, flow direction from bottom to top.
Requirement	Free space above and below the ACS550 drive: 200 mm (8 in). Free space is not required on the drive's sides – ACS550 drives can be mounted side-by-side.

Air flow, 208…240 V drives

The following table lists heat loss and air flow data for 208…240 V drives.

Drive		Heat loss		Air flow	
ACS550-x1-	**Frame size**	**W**	**BTU/hr**	**m^3/h**	**ft^3/min**
-04A6-2	R1	55	189	44	26
-06A6-2	R1	73	249	44	26
-07A5-2	R1	81	276	44	26
-012A-2	R1	118	404	44	26
-017A-2	R1	161	551	44	26
-024A-2	R2	227	776	88	52
-031A-2	R2	285	973	88	52
-046A-2	R3	420	1434	134	79
-059A-2	R3	536	1829	134	79
-075A-2	R4	671	2290	280	165
-088A-2	R4	786	2685	280	165
-114A-2	R4	1014	3463	280	165
-143A-2	R6	1268	4431	405	238
-178A-2	R6	1575	5379	405	238
-221A-2	R6	1952	6666	405	238
-248A-2	R6	2189	7474	405	238

000467918.xls B

Air flow, 380…480 V drives

The following table lists heat loss and air flow data for 380…480 V drives.

Drive		Heat loss		Air flow	
ACS550-x1-	**Frame size**	**W**	**BTU/hr**	**m^3/h**	**ft^3/min**
-03A3-4	R1	40	137	44	26
-04A1-4	R1	52	178	44	26
-05A4-4	R1	73	249	44	26
-06A9-4	R1	97	331	44	26
-08A8-4	R1	127	434	44	26
-012A-4	R1	172	587	44	26
-015A-4	R2	232	792	88	52
-023A-4	R2	337	1151	88	52

Drive		Heat loss		Air flow	
ACS550-x1-	Frame size	W	BTU/hr	m^3/h	ft^3/min
-031A-4	R3	457	1561	134	79
-038A-4	R3	562	1919	134	79
-044A-4	R4	667	2278	280	165
-045A-4	R3	667	2278	134	79
-059A-4	R4	907	3098	280	165
-072A-4	R4	1120	3825	280	165
-077A-4	R5	1295	4423	250	147
-078A-4	R4	1295	4423	280	165
-087A-4	R4	1440	4918	280	165
-096A-4	R5	1440	4918	250	147
-097A-4	R4	1440	4918	280	165
-124A-4	R6	1940	6625	405	238
-125A-4	R5	1940	6625	350	205
-157A-4	R6	2310	7889	405	238
-180A-4	R6	2810	9597	405	238
-195A-4	R6	3050	10416	405	238
-246A-4	R6	3050	10416	405	238

00467918.xls B

Air flow, 500…600 V drives

The following table lists heat loss and air flow data for 500…600 V drives.

Drive		Heat loss		Air flow	
ACS550-U1-	**Frame size**	**W**	**BTU/hr**	**m^3/h**	**ft^3/min**
-02A7-6	R2	52	178	88	52
-03A9-6	R2	73	249	88	52
-06A1-6	R2	127	434	88	52
-09A0-6	R2	172	587	88	52
-011A-6	R2	232	792	88	52
-017A-6	R2	337	1151	88	52
-022A-6	R3	457	1561	134	79
-027A-6	R3	562	1919	134	79
-032A-6	R4	667	2278	280	165
-041A-6	R4	907	3098	280	165
-052A-6	R4	1117	3815	280	165
-062A-6	R4	1357	4634	280	165
-077A-6	R6	2310	7889	405	238
-099A-6	R6	2310	7889	405	238
-125A-6	R6	2310	7889	405	238
-144A-6	R6	2310	7889	405	238

00467918.xls B

Dimensions and weights

The dimensions and mass for the ACS550 depend on the frame size and enclosure type. If unsure of the frame size, first, find the "Type" code on the drive labels (see sections *Type code* on page *13* and *Drive labels* on page *12*). Then look up that type code in the rating tables (see chapter *Technical data*, page *259*), to determine the frame size. A complete set of dimensional drawings for ACS550 drives is located in *ACS550 Technical Reference Manual*.

Mounting dimensions

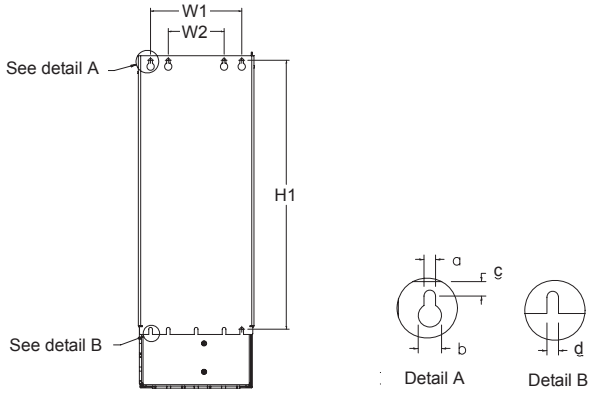

IP21 / UL type 1 and IP54 / UL type 12 – Dimensions for each frame size												
Ref.	**R1**		**R2**		**R3**		**R4**		**R5**		**R6**	
	mm	**in**	**mm**	**in**	**mm**	**in**	**mm**	**in**	**mm**	**in**	**mm**	**in**
W1[1]	98.0	3.9	98.0	3.9	160	6.3	160	6.3	238	9.4	263	10.4
W2[1]	--	--	--	--	98.0	3.9	98.0	3.9	--	--	--	--
H1[1]	318	12.5	418	16.4	473	18.6	578	22.8	588	23.2	675	26.6
a	5.5	0.2	5.5	0.2	6.5	0.25	6.5	0.25	6.5	0.25	9.0	0.35
b	10.0	0.4	10.0	0.4	13.0	0.5	13.0	0.5	14.0	0.55	14.0	0.55
c	5.5	0.2	5.5	0.2	8.0	0.3	8.0	0.3	8.5	0.3	8.5	0.3
d	5.5	0.2	5.5	0.2	6.5	0.25	6.5	0.25	6.5	0.25	9.0	0.35

[1] Center to center dimension.

Outside dimensions

Drives with IP21 / UL type 1 enclosures

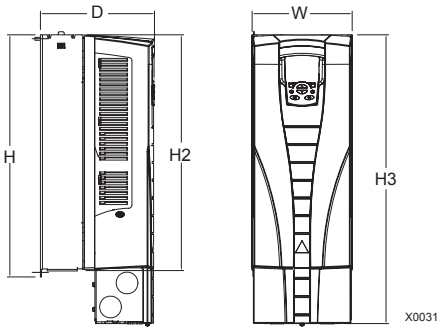

IP21 / UL type 1 – dimensions for each frame size												
Ref.	R1		R2		R3		R4		R5		R6	
	mm	in	mm	in	mm	in	mm	in	mm	in	mm	in
W	125	4.9	125	4.9	203	8.0	203	8.0	267	10.5	302	11.9
H	330	13.0	430	16.9	490	19.3	596	23.5	602	23.7	700	27.6
H2	315	12.4	415	16.3	478	18.8	583	23.0	578	22.8	698	27.5
H3	369	14.5	469	18.5	583	23.0	689	27.1	736	29.1	880	34.7
D	212	8.3	222	8.7	231	9.1	262	10.3	286	11.3	400	15.8

00467918.xls B

Drives with IP54 / UL type 12 enclosures

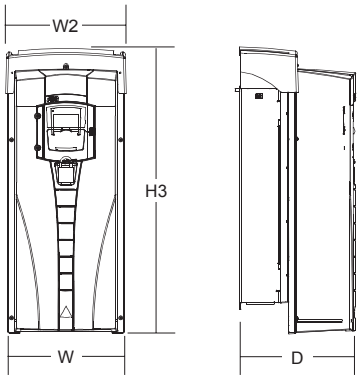

IP54 / UL type 12 – Dimensions for each frame size												
Ref.	**R1**		**R2**		**R3**		**R4**		**R5**		**R6**	
	mm	**in**	**mm**	**in**	**mm**	**in**	**mm**	**in**	**mm**	**in**	**mm**	**in**
W	213	8.4	213	8.4	257	10.1	257	10.1	369	14.5	410	16.1
W2	222	8.8	222	8.8	267	10.5	267	10.5	369	14.5	410	16.1
H3	461	18.1	561	22.1	629	24.8	760	29.9	775	30.5	926	36.5
D	234	9.2	245	9.6	254	10.0	285	11.2	309	12.2	423	16.7

00467918.xls B

Weight

The following table lists typical maximum weights for each frame size. Variations within each frame size (due to components associated with voltage/current ratings and options) are minor.

Enclosure	**Weight**											
	R1		**R2**		**R3**		**R4**		**R5**		**R6**	
	kg	**lb**	**kg**	**lb**	**kg**	**lb**	**kg**	**lb**	**kg**	**lb**	**kg**	**lb**
IP21 / UL type 1	6.5	14.3	9.0	19.8	16	35	24	53	34	75	69	152
IP54 / UL type 12	8.0	17.6	11.0	24.3	17.0	37.5	26.0	57.3	42.0	92.6	86.0	190

00467918.xls B

Degrees of protection

Available enclosures:

- IP21 / UL type 1 enclosure. The site must be free of airborne dust, corrosive gases or liquids, and conductive contaminants such as condensation, carbon dust and metallic particles.
- IP54 / UL type 12 enclosure. This enclosure provides protection from airborne dust and light sprays or splashing water from all directions.

Compared to the IP21 / UL type 1 enclosure, the IP54 / UL type 12 enclosure has:

- the same internal plastic shell as the IP21 enclosure
- a different outer plastic cover
- an additional internal fan to improve cooling
- larger dimensions
- the same rating (does not require a derating).

Ambient conditions

The following table lists the ACS550 environmental requirements.

Ambient environment requirements		
	Installation site	**Storage and transportation in the protective package**
Altitude	• 0…1000 m (0…3 300 ft) • 1000…2000 m (3 300…6 600 ft) if P_N and I_{2N} derated 1% every 100 m above 1000 m (300 ft above 3 300 ft)	
Ambient temperature	• Min. -15 °C (5 °F) – no frost allowed • Max. (fsw = 1 or 4) 40 °C (104 °F); 50 °C (122 °F) if P_N and I_{2N} derated to 90% • Max. (fsw = 8) 40 °C (104 °F) if P_N and I_{2N} derated to 80% • Max. (fsw = 12) 30 °C (86 °F) if P_N and I_{2N} derated to 65% (to 50% for 600 V, R4 frame sizes, that is for ACS550-U1-032A-6 … ACS550-U1-062A-6)	-40…70 °C (-40…158 °F)
Relative humidity	< 95% (non-condensing)	
Contamination levels (IEC 721-3-3)	• No conductive dust allowed. • The ACS550 should be installed in clean air according to enclosure classification. • Cooling air must be clean, free from corrosive materials and free from electrically conductive dust. • Chemical gases: Class 3C2 • Solid particles: Class 3S2	Storage • No conductive dust allowed. • Chemical gases: Class 1C2 • Solid particles: Class 1S2 Transportation • No conductive dust allowed. • Chemical gases: Class 2C2 • Solid particles: Class 2S2

The following table lists the standard stress testing that the ACS550 passes.

Stress tests		
	Without shipping package	**Inside shipping package**
Sinusoidal vibration	Mechanical conditions: In accordance with IEC 60721-3-3, Class 3M4 • 2…9 Hz 3.0 mm (0.12 in) • 9…200 Hz 10 m/s^2 (33 ft/s^2)	In accordance with ISTA 1A and 1B specifications.
Shock	Not allowed	In accordance with IEC 68-2-29: max. 100 m/s^2 (330 ft/s^2), 11ms
Free fall	Not allowed	• 76 cm (30 in), frame size R1 • 61cm (24 in), frame size R2 • 46 cm (18 in), frame size R3 • 31 cm (12 in), frame size R4 • 25 cm (10 in), frame size R5 • 15 cm (6 in), frame size R6

Materials

Material specifications	
Drive enclosure	• PC/ABS 2.5 mm, color NCS 1502-Y or NCS 7000-N • Hot-dip zinc coated steel sheet 1.5…2 mm, thickness of coating 20 micrometers. If the surface is painted, the total thickness of the coating (zinc and paint) is 80…100 micrometers. • Cast aluminium AlSi • Extruded aluminium AlSi
Package	Corrugated board, expanded polystyrene, plywood, raw wood (heat dried). Package wrap consists of one or more of the following: PE-LD plastic wrap, PP or steel bands.
Disposal	The drive contains raw materials that should be recycled to preserve energy and natural resources. The package materials are environmentally compatible and recyclable. All metal parts can be recycled. The plastic parts can either be recycled or burned under controlled circumstances, according to local regulations. Most recyclable parts are marked with recycling marks. If recycling is not feasible, all parts excluding electrolytic capacitors and printed circuit boards can be landfilled. The DC capacitors contain electrolyte and, if the drive is not provided with the RoHS marking, the printed circuit boards contain lead, both of which will be classified as hazardous waste within the EU. They must be removed and handled according to local regulations. For further information on environmental aspects and more detailed recycling instructions, please contact your local ABB distributor.

Applicable standards

Drive compliance with the following standards is identified by the standard "marks" on the type code label.

Mark	Applicable standards	
CE	EN 50178 (1997)	Electronic equipment for use in power installations
	IEC/EN 60204-1 (2005)	Safety of machinery. Electrical equipment of machines. Part 1: General requirements. *Provisions for compliance:* The final assembler of the machine is responsible for installing: • an emergency-stop device • a supply disconnecting device.
	IEC/EN 60529 (2004)	Degrees of protection provided by enclosures (IP code)
	IEC 60664-1 (2002)	Insulation coordination for equipment within low-voltage systems. Part 1: Principles, requirements and tests
	IEC/EN 61800-5-1 (2003)	Adjustable speed electrical power drive systems. Part 5-1: Safety requirements. Electrical, thermal and energy
	IEC/EN 61800-3 (2004)	Adjustable speed electrical power drive systems. Part 3: EMC requirements and specific test methods
C-Tick	IEC/EN 61800-3 (2004)	Adjustable speed electrical power drive systems. Part 3: EMC requirements and specific test methods
c UL us LISTED	UL 508C	UL Standard for Safety, Power Conversion Equipment, third edition
CSA	C22.2 No. 14	CSA Standard for Industrial Control Equipment (for ACS550-U1 drives only)

CE marking

CE A CE mark is attached to the drive to verify that the drive follows the provisions of the European Low Voltage and EMC Directives (Directive 73/23/EEC, as amended by 93/68/EEC, and Directive 89/336/EEC, as amended by 93/68/EEC).

Note: The 600 V ACS550-U1 drives are not CE approved.

Compliance with the EMC Directive

The Directive defines the requirements for immunity and emissions of electrical equipment used within the European Union. The EMC product standard [IEC/EN 61800-3 (2004)] covers requirements stated for drives.

Compliance with IEC/EN 61800-3 (2004)

See page 293.

C-Tick marking

The drive carries C-Tick marking.

C-Tick marking is required in Australia and New Zealand. A C-Tick mark is attached to the drive to verify compliance with the relevant standard (IEC 61800-3 (2004) –

Adjustable speed electrical power drive systems – Part 3: EMC product standard including specific test methods), mandated by the Trans-Tasman Electromagnetic Compatibility Scheme.

The Trans-Tasman Electromagnetic Compatibility Scheme (EMCS) was introduced by the Australian Communication Authority (ACA) and the Radio Spectrum Management Group (RSM) of the New Zealand Ministry of Economic Development (NZMED) in November 2001. The aim of the scheme is to protect the radio frequency spectrum by introducing technical limits for emission from electrical/ electronic products.

Compliance with IEC/EN 61800-3 (2004)

See page 293.

UL/CSA markings

An UL mark is attached to ACS550 drives to verify that the drive follows the provisions of UL 508C.

A CSA mark is attached to ACS550-**U1** type drives to verify that the drive follows the provisions of C22.2 NO. 14.

The ACS550 is suitable for use on a circuit capable of delivering not more than 100,000 RMS symmetrical amperes, 480 V maximum.

Branch circuit protection must be provided in accordance with local codes.

The ACS550 has an electronic motor protection feature that complies with the requirements of UL 508C and, for ACS550-U1, C22.2 No. 14. When this feature is selected and properly adjusted, additional overload protection is not required unless more than one motor is connected to the drive or unless additional protection is required by applicable safety regulations. See parameters 3005 (MOT THERM PROT) and 3006 (MOT THERM RATE).

The drives are to be used in a controlled environment. See section *Ambient conditions* on page 289 for specific limits.

Note: For open type enclosures, i.e. drives without the conduit box and/or cover for IP21 / UL type 1 drives, or without the conduit plate and/or hood for IP54 / UL type 12 drives, the drive must be mounted inside an enclosure in accordance with National Electric Code and local electrical codes.

Brake choppers, when applied with appropriately sized brake resistors, will allow the drive to dissipate regenerative energy (normally associated with quickly decelerating a motor). Frame sizes R1 and R2 have a built-in brake chopper as standard equipment. For frame sizes R3…R6, contact your ABB representative for appropriate parts. See section *Brake components* on page 277.

IEC/EN 61800-3 (2004) Definitions

EMC stands for **E**lectro**m**agnetic **C**ompatibility. It is the ability of electrical/electronic equipment to operate without problems within an electromagnetic environment.

Likewise, the equipment must not disturb or interfere with any other product or system within its locality.

First environment includes establishments connected to a low-voltage network which supplies buildings used for domestic purposes.

Second environment includes establishments connected to a network not directly supplying domestic premises.

Drive of category C2: drive of rated voltage less than 1000 V and intended to be installed and commissioned only by a professional when used in the first environment.

Note: A professional is a person or organisation having necessary skills in installing and/or commissioning power drive systems, including their EMC aspects.

Category C2 has the same EMC emission limits as the earlier class first environment restricted distribution. EMC standard IEC/EN 61800-3 does not any more restrict the distribution of the drive, but the using, installation and commissioning are defined.

Drive of category C3: drive of rated voltage less than 1000 V, intended for use in the second environment and not intended for use in the first environment.

Category C3 has the same EMC emission limits as the earlier class second environment unrestricted distribution.

Compliance with the IEC/EN 61800-3 (2004)

The immunity performance of the drive complies with the demands of IEC/EN 61800-3, category C2 (see page *292* for IEC/EN 61800-3 definitions). The emission limits of IEC/EN 61800-3 are complied with the provisions described below.

First environment (drives of category C2)

1. The internal EMC filter is connected.
2. The motor and control cables are selected as specified in this manual.
3. The drive is installed according to the instructions given in this manual.
4. The motor cable length does not exceed the allowed maximum length specified in section *Motor cable length for 400 V drives* on page *272* for the frame size and switching frequency in use.

   WARNING! In a domestic environment, this product may cause radio inference, in which case supplementary mitigation measures may be required.

Second environment (drives of category C3)

1. The internal EMC filter is connected.
2. The motor and control cables are selected as specified in this manual.
3. The drive is installed according to the instructions given in this manual.
4. The motor cable length does not exceed the allowed maximum length specified in section *Motor cable length for 400 V drives* on page *272* for the frame size and switching frequency in use.

WARNING! A drive of category C3 is not intended to be used on a low-voltage public network which supplies domestic premises. Radio frequency interference is expected if the drive is used on such a network.

Note: It is not allowed to install a drive with the internal EMC filter connected on IT (ungrounded) systems. The supply network becomes connected to ground potential through the EMC filter capacitors, which may cause danger or damage the drive.

Note: It is not allowed to install a drive with the internal EMC filter connected to a corner grounded TN system as this would damage the drive.

Liability limits

The manufacturer is not responsible for:

- Any costs resulting from a failure if the installation, commissioning, repair, alteration, or ambient conditions of the drive do not fulfil the requirements specified in the documentation delivered with the unit and other relevant documentation.
- Units subjected to misuse, negligence or accident.
- Units comprised of materials provided or designs stipulated by the purchaser.

In no event shall the manufacturer, its suppliers or subcontractors be liable for special, indirect, incidental or consequential damages, losses or penalties.

This is the sole and exclusive warranty given by the manufacturer with respect to the equipment and is in lieu of and excludes all other warranties, express or implied, arising by operation of law or otherwise, including, but not limited to, any implied warranties of merchantability or fitness for a particular purpose.

If you have any questions concerning your ABB drive, please contact the local distributor or ABB office. The technical data, information and specifications are valid at the time of printing. The manufacturer reserves the right to make modifications without prior notice.

Product protection in the USA

This product is protected by one or more of the following US patents:

4,920,306	5,301,085	5,463,302	5,521,483	5,532,568	5,589,754
5,612,604	5,654,624	5,799,805	5,940,286	5,942,874	5,952,613
6,094,364	6,147,887	6,175,256	6,184,740	6,195,274	6,229,356
6,252,436	6,265,724	6,305,464	6,313,599	6,316,896	6,335,607
6,370,049	6,396,236	6,448,735	6,498,452	6,552,510	6,597,148
6,741,059	6,774,758	6,844,794	6,856,502	6,859,374	6,922,883
6,940,253	6,934,169	6,956,352	6,958,923	6,967,453	6,972,976
6,977,449	6,984,958	6,985,371	6,992,908	6,999,329	7,023,160
7,034,510	7,036,223	7,045,987	7,057,908	7,059,390	7,067,997
7,082,374	7,084,604	7,098,623	7,102,325	D503,931	D510,319
D510,320	D511,137	D511,150	D512,026	D512,696	D521,466

Other patents pending.

Index

Numerics

0xxxx register
EFB function codes . . . 204
EFB mapping . . . 202
1xxxx register
EFB function codes . . . 205
EFB mapping . . . 204
2-wire sensor, connection example . . . 80
3-wire macro . . . 73
3xxxx register
EFB function codes . . . 205
EFB mapping . . . 205
4xxxx register
EFB function codes . . . 207
EFB mapping . . . 205

A

ABB
feedback on ABB manuals . . . 309
product and service inquiries . . . 309
product training . . . 309
standard (default) macro . . . 72
acceleration
/deceleration, parameter group . . . 131
at aux. stop (PFC), parameter . . . 186
compensation, parameter . . . 134
ramp select, parameter . . . 131
ramp shape, parameter . . . 131
ramp time (PFC), parameter . . . 186
ramp zero select, parameter . . . 132
time, parameter . . . 131
activate (external PID), parameter . . . 168
actual input (PID), parameters . . . 164
actual max. (PID), parameters . . . 164
actual min. (PID), parameters . . . 164
actual values
mapping, FBA, generic profile . . . 241
scaling, EFB comm . . . 197
scaling, FBA comm . . . 228
scaling, FBA, ABB drives profile . . . 239
scaling, FBA, generic profile . . . 241
alarm
codes . . . 250
codes (Basic Control Panel) . . . 253
display enable, parameter . . . 124
listing . . . 250
words, data parameters . . . 105
alternate macro . . . 74
altitude
derating . . . 262
environment limit . . . 289
shipping limit . . . 289
ambient conditions . . . 289
ambient temperature
derating . . . 262
environment limit . . . 289
shipping limit . . . 289
analog cable, requirements . . . 282
analog I/O
connections . . . 22
specifications . . . 22
analog input
parameter group . . . 115
data parameter . . . 101
fault limit, parameters . . . 142
filter, parameters . . . 115
less than min. auto. reset, parameter . . . 143
less than min., fault parameter . . . 140
loss, fault codes . . . 245
maximum, parameters . . . 115
minimum, parameters . . . 115
analog output
parameter group . . . 119
content max., parameters . . . 119
content min., parameters . . . 119
current max., parameters . . . 119
current min., parameters . . . 119
data content, parameters . . . 119
data parameters . . . 101
filter, parameters . . . 119
angle
mechanical, data parameter . . . 102
application block output, data parameter . . . 100
application macro, parameter . . . 98
application macros
see macros
arrow (Assistant Control Panel) . . . 43
assistant (Assistant Control Panel)
start-up . . . 51
tasks . . . 52
Assistant Control Panel
see control panel (Assistant)
assistants mode (Assistant Control Panel) . . . 51
autochange
interval, parameter . . . 179
level, parameter . . . 180
overview . . . 180
starting order counter . . . 180
automatic reset
see reset, automatic
auxiliary motor
see motor, auxiliary

B

backing up parameters
Assistant Control Panel . . . 58
Basic Control Panel . . . 69
Basic Control Panel
see control panel (Basic)

battery (Assistant Control Panel) 258
baud rate (RS-232), parameter 172
braking
components 277
protection from overheated resistor 280
resistor heat dissipation 280
selecting brake choppers/resistors 277
wiring 280
break point frequency, fault parameter 141
buffer overruns (count), parameter 172

C

cable requirements
control 281
grounding 266
input power 265
motor 274
capacitor
reforming 258
replacement 258
category (IEC/EN 61800-3 definition)
C2 293
C3 293
CB
see control board
CE marking 291
changed parameters (Assistant Control Panel) . . 54
chopper
see braking
clock setting (Assistant Control Panel) 56
communication
see EFB (embedded fieldbus)
see EFB, drive parameters
see FBA (fieldbus adapter)
see FBA, drive parameters
conduit kit 18
config file
CPI firmware revision, parameter 171
fault code 247
id revision, parameter 171
revision, parameter 171
connections
control 22
diagram 22
EFB comm 190
FBA module 224
X1 22
constant speed
see speed, constant
construction code 13
contamination levels
environment limit 289
shipping limit 289
contrast, control panel (Assistant) 48
control
connection specifications 281
location, data parameter 100
terminal specifications 282
through I/O interface 38
control board
overtemperature, fault code 247
overtemperature, fault parameter 142
temperature, data parameter 102
control cable
connections 22
requirements 281
control panel 41
cable requirements 282
comm error, fault parameter 140
display bar-graph 147, 148
display decimal point (form), parameters . . . 147
display max., parameters 148
display min., parameters 148
display process variables, parameter group 147
display selection, parameters 147
display units, parameters 148
maintenance 258
manual compatibility 41
parameter lock, parameter 121
pass code, parameter 121
reference control, parameter 109
signal max., parameters 147
signal min., parameters 147
control panel (Assistant) 42
arrow 43
assistants mode 51
battery 258
changed parameters mode 54
clock set mode 56
direction of rotation 43, 47
display contrast 48
fault logger mode 55
fault mode 43, 243, 244
help 45
how to do common tasks 44
I/O settings mode 61
main menu 44
operation 43
output mode 47
overview 42
parameter backup mode 58
parameters mode 49
soft keys 42
start/stop 46
status line (LOC/REM, arrow) 43
control panel (Basic) 62
alarm codes 253
copy mode 69
direction of rotation 62, 64
fault mode 63, 243, 244
how to do common tasks 63
main menu 63
operation 63
output mode 65
overview 62
parameter mode 67
reference mode 66
start/stop 64
control word
ABB drives, FBA, description 232
EFB, description 209
FBA 222
FBA generic profile 240

cooling
air flow . . . 283
fan maintenance triggers . . . 139
heat loss . . . 283
space requirement . . . 283
copy mode (Basic Control Panel) . . . 69
corner grounded TN system . . . 267
warning about filters . . . 6
warning about screws at EM1, EM3 . . . 20
warning about screws at F1, F2 . . . 21
correction source (PID), parameter . . . 169
cover
remove . . . 16
replace . . . 30
cover, top, see hood
CRC errors (count), parameter . . . 172
crimp-on ring lugs . . . 269
critical speeds (avoiding)
parameter group . . . 136
high, parameters . . . 136
low, parameters . . . 136
select, parameter . . . 136
C-Tick marking . . . 291
current
at fault, history parameter . . . 106
data parameter . . . 100
max. limit, parameter . . . 125
measurement, fault code . . . 246
rating code . . . 13

D

DC
brake time, parameter . . . 129
bus voltage, data parameter . . . 100
current ref., parameter . . . 129
magnetizing time, parameter . . . 128
overvoltage, fault code . . . 245
undervoltage, fault code . . . 245
voltage stabilizer, parameter . . . 138
deceleration
parameter group . . . 131
at aux. start (PFC), parameter . . . 186
emergency time, parameter . . . 132
ramp select, parameter . . . 131
ramp shape, parameter . . . 131
ramp time (PFC), parameter . . . 186
ramp zero select, parameter . . . 132
time, parameter . . . 131
default values
listing for macros . . . 82
listing for parameters . . . 85
derating
adjustment example . . . 262
altitude . . . 262
single phase supply . . . 262
switching frequency . . . 262
temperature . . . 262
derivation time (PID), parameter . . . 161
derivation time, parameter . . . 133
device overtemperature, fault code . . . 245
diagnostics . . . 243
EFB comm . . . 198
FBA comm . . . 229
digital cable requirements . . . 282
digital input
at fault, history parameters . . . 106
connections . . . 22
specifications . . . 23
status, data parameter . . . 101
digital output
connections . . . 22
specifications . . . 281
dimensions
drive, mounting . . . 286
drive, outside . . . 287
DIP switches . . . 20, 22
direction control, parameter . . . 108
direction of rotation
Assistant Control Panel . . . 43, 47
Basic Control Panel . . . 62, 64
display format (PID), parameter . . . 161
disposal . . . 290
download parameter sets
application . . . 58
full set . . . 58
user sets . . . 58
drive
EFB comm installation . . . 190
FBA module installation . . . 224
id, fault code . . . 247
mounting . . . 17
mounting dimensions . . . 286
outside dimensions . . . 287
rating, parameter . . . 146
temperature, data parameter . . . 100
weight . . . 288
drive on time, data parameters . . . 102

E

earth fault
fault code . . . 246
parameter . . . 141
earthing
see ground

EFB (embedded fieldbus) 189
actual value scaling 197
actual values 197
analog output control, activate 195
comm fault response 196
configuration 192
configure for loss of communication 199
control interface 189
control word 209
diagnostics 198
drive control of functions, activate 193
exception codes 208
fault code 28 200
fault code 31 200
fault code 32 200
fault code 33 200
fault tracing parameters 198
fault, duplicate stations 199
fault, intermittent off-line 200
fault, no master station on line 199
fault, swapped wires 199
feedback from drive 197
input reference sel., activate 194
installation 190
misc. drive control, activate 194
modbus actual values 208
PID control setpoint source, activate 196
planning 190
profiles 202
reference scaling, ABB drives profile 218
relay output control, activate 195
set-up 191
start/stop/direction control, activate 193
state diagram 217
status word 212
termination 191
EFB, drive parameters 173
protocol, parameter group 173
baud rate, parameter 173
command words, data parameters 104
config file, fault code 247
control profile, parameter 173
CRC errors (count), parameter 173
fault codes 247
fault function, parameter 142
fault time, parameter 142
ok messages (count), parameter 173
parameters 173, 174
parity, parameter 173
protocol id, parameter 173
protocol select, parameter 187
relay output word, data parameter 101
station id, parameter 173
status words, data parameters 104
status, parameter 173
UART errors (count), parameter 173
values, data parameter 101
efficiency 282
ELV (Extra Low Voltage) 23
EM1 and EM3 screws
location 20
on corner grounded TN system 267
on IT systems 268
warning 20, 267, 268
embedded fieldbus
see EFB
see EFB, drive parameters
EMC
CE marking 291
C-Tick marking 291
motor cable requirements 274
emergency
deceleration time, parameter 132
stop devices 265
stop select, parameter 129
enclosure
protection class code 13
types 289
encoder
parameter group 170
enable, parameter 170
error, fault code 246
fault, parameter 170
number of pulses, parameter 170
position reset enable, parameter 170
zero pulse detected, data parameter 102
zero pulse enable, parameter 170
energy
intake in kWh, data parameter 103
intake in MWh, data parameter 103
error value inversion (PID), parameter 161
exception codes, EFB modbus 208
external comm module, parameter group
see FBA, drive parameters
external commands selection, parameter 107
external control selection, parameter 109
external fault
automatic reset, parameter 143
fault codes 246
parameters 140
external reference, data parameter 100

F

F1 and F2 screws
location 21
on corner grounded TN system 267
on IT systems 268
warning 21, 267, 268
fan maintenance 256, 257

fault
functions, parameter group 140
history, parameter group 106
codes 244
comm failure (EFB) 196
current at, history parameter 106
digital input status at, history parameter . . . 106
FBA comm 228
frequency at, history parameter 106
history 250
last, history parameter 106
listing 244
logging (Assistant Control Panel) 55
mode (Assistant Control Panel) . . 43, 243, 244
mode (Basic Control Panel) 63, 243, 244
previous, history parameter 106
reset 249
reset select, parameter 121
speed at, history parameter 106
status at, history parameter 106
time of, history parameters 106
torque at, history parameter 106
voltage at, history parameter 106
words, data parameters 105
fault display
alarm 244
fault 243
fault names 244
FB actual signals, parameter group 104
FBA
protocol listing 221
FBA (fieldbus adapter) 221
actual values 223
analog output control, activate 227
comm fault response 228
configuration 225
control word 222
control word, ABB drives 232
diagnostics 229
drive feedback 228
fieldbus control, activate 225
input reference sel., activate 226
installation 224
PID control setpoint source, activate 228
planning 223
reference 223
relay output control, activate 227
set-up 225
start/stop /direction control, activate 225
state diagram, ABB drives 235
status word 223
status word, ABB drives 233
FBA, drive parameters 171
ext comm module parameter group 171
command words, data parameters 104
config file CPI firmware revision, parameter . 171
config file id revision, parameter 171
config file revision, parameter 171
fault function, parameter 142
fault time, parameter 142
fieldbus appl. program revision, parameter . 171
fieldbus CPI firmware revision, parameter . . 171
fieldbus parameter refresh, parameter 171
fieldbus parameters 171
fieldbus status, parameter 171
fieldbus type, parameter 171
protocol select, parameter 187
relay output word, data parameter 101
status words, data parameters 104
values, data parameter 101
feedback
multiplier (PID), parameter 163
on ABB manuals 309
select (PID), parameter 163
field weakening point 271
fieldbus
see EFB (embedded fieldbus)
see EFB, drive parameters
see FBA (fieldbus adapter)
see FBA, drive parameters
fieldbus adapter
see FBA
see FBA, drive parameters
fieldbus, embedded
see EFB
see EFB, drive parameters
firmware
panel, version 41, 45
version, parameter 60, 146
first environment
(C2), compliance with IEC/EN 61800-3 293
(C2), motor cable length 272
definition 293
FlashDrop
application macro, parameter 98
connection 20
parameter view, parameter 124
floating network
see IT system
flux braking, parameter 137
flux optimization, parameter 137
force trip, fault code 247
frame errors (count), parameter 172
frame size 259
free fall, stress testing 290
frequency
at fault, history parameter 106
max. limit, parameter 126
min. limit, parameter 126
motor, resolution 271
motor, specification 271
switching, parameter 138

fuses
208…240 V drives 264
380…480 V drives 264
500…600 V drives 265

G

gain (PID), parameter 160
generic profile, FBA
actual value mapping 241
actual value scaling 241
overview 240
reference scaling 240
technical data 240
gland kit 18
ground
cable/wire requirements 266
fault protection 273

H

hand-auto macro 76
heat loss 283
hood (IP54 / UL type 12) 17, 30
how to do common tasks
with Assistant Control Panel 44
with Basic Control Panel 63

I

I/O settings (Assistant Control Panel) 61
I/O, control through 38
id run
fail, fault code 246
parameter 99
performing 39
identification magnetization 99
IEC ratings
see ratings
impedance grounded network
see IT system
incompatible software, fault code 247
information, parameter group 146
input power
cable/wire requirements 265
disconnecting device (disconnecting means) 263
specifications 263
input power connection
IT system 268
lugs for R6 269
terminal size 268
torque 268
installation
check list 29
compatibility 14
environment 14
flow chart 11
location 15
mounting drive 17
preparation 12
procedures 11
tools 14
wiring overview 18
insulation check 24
integration time (PID), parameter 161
integration time, parameter 133
interlocks, parameter 181
internal setpoint (PID), parameter 163
IR compensation
frequency, parameter 137
parameters 137
voltage, parameter 137
isolation, between AC power source and drive . 263
IT system
connections 268
warning about filters 6, 276
warning about screws at EM1, EM3 20
warning about screws at F1, F2 21

J

jogging activation, parameter 108

K

keypad
see control panel
keypad reference select, parameter 109
kWh
counter, data parameter 100
intake energy, data parameter 103

L

label
serial number 12
type code 12
language, parameter 98
LED
on Assistant Control Panel 42, 243, 244
on drive body 20, 243, 244
liability limits 294
limits, parameter group 125
load curve, see user load curve
load frequency, see user load curve
load torque, see user load curve
loading package version, parameter 146
LOC (local control)
indication on Assistant Control Panel 43
indication on Basic Control Panel 62
local control mode lock, parameter 122
lock
control panel access, IP54 30
drive control at local control panel 122
parameters 121
low frequency (PFC), parameters 177
lugs
for R6 power cables 269
ring, crimp-on 269
terminal, screw-on 270

M

macros
- 3-wire . . . 73
- ABB standard (default) . . . 72
- alternate . . . 74
- hand-auto . . . 76
- motor potentiometer . . . 75
- PFC . . . 78
- PID control . . . 77
- torque control . . . 79
- user parameter sets . . . 81
- parameter default values . . . 82
- parameters not changed . . . 71

magnetization, identification . . . 99
main menu
- Assistant Control Panel . . . 44
- Basic Control Panel . . . 63

mains
- see input power

maintenance
- capacitors . . . 258
- control panel . . . 258
- heat sink . . . 255
- internal enclosure fan . . . 257
- intervals . . . 255
- main fan . . . 256
- triggers, parameter group . . . 139

manuals
- list of ACS550 manuals . . . 2
- providing feedback . . . 309

mapping
- actual value, FBA, generic profile . . . 241
- EFB modbus . . . 202

materials . . . 290
maximum
- frequency, parameter . . . 126
- torque limit, parameters . . . 127
- torque select, parameter . . . 126

mechanical
- angle, data parameter . . . 102
- revolutions, data parameter . . . 102

minimum
- frequency, parameter . . . 126
- torque limit, parameters . . . 126
- torque select, parameter . . . 126

modbus
- EFB addressing, convention . . . 202
- EFB coils . . . 202
- EFB discrete inputs . . . 204
- EFB holding registers . . . 205
- EFB input registers . . . 205
- EFB mapping details . . . 202
- EFB mapping summary . . . 202
- EFB supported features . . . 201
- EFB technical data . . . 201

motor
- checking insulation . . . 24
- compatibility . . . 14
- id run, parameter . . . 99
- load curve break point frequency . . . 141
- load curve max., fault parameter . . . 141
- load curve zero speed load . . . 141
- maintenance triggers . . . 139
- nominal current, parameter . . . 99
- nominal frequency, parameter . . . 99
- nominal power, parameter . . . 99
- nominal speed, parameter . . . 99
- nominal voltage, parameter . . . 98
- phase, fault code . . . 247
- requirements . . . 14
- stall, fault code . . . 246
- thermal protection . . . 273

motor cable
- checking insulation . . . 24
- length
  - 400 V drives . . . 272
  - 600 V drives . . . 273
- max. length . . . 271
- requirements . . . 274
- requirements, EMC . . . 274

motor connection
- lugs for R6 . . . 269
- terminal size . . . 268
- torque . . . 268

motor control
- parameter group . . . 137
- control mode, parameter . . . 98
- IR compensation, parameters . . . 137

motor potentiometer macro . . . 75
motor temperature
- measure, parameter group . . . 150
- alarm limit, parameter . . . 151
- data parameter . . . 102
- fault limit, parameter . . . 151
- overtemperature, fault code . . . 245
- sensor selection, parameter . . . 151
- sensor type, parameter . . . 151
- thermal protection . . . 273
- thermal protection, fault parameter . . . 140
- thermal time, fault parameter . . . 140

motor, auxiliary
- aux start order, parameter . . . 186
- aux. start delay (PFC), parameter . . . 177
- aux. stop delay (PFC), parameter . . . 177
- number of aux., parameter . . . 178

mounting
- dimensions . . . 286
- template . . . 16

MWh
- counter, data parameter . . . 102
- intake energy, data parameter . . . 103
- power consumption, maintenance trigger . . 139

N

NEMA ratings
- see ratings

noise
- random sw. freq. parameter . . . 138

NPN 23

O

offset (PID), parameter 168
ok messages (count), parameter 172
operating data, parameter group 100
operation
  Assistant Control Panel 43
  Basic Control Panel 63
OPEX link, fault code 246
OPEX power, fault code 246
options 13
  parameter group 187
  code 13
output
  frequency, data parameter 100
  voltage, data parameter 100
  wiring, fault code 247
output mode
  Assistant Control Panel 47
  Basic Control Panel 65
overcurrent
  automatic reset, parameter 143
  fault code 244
overload curve
  see user load curve
overspeed, fault code 247
overvoltage
  control enable, parameter 125

P

panel communication, parameter group 172
panel display variables, parameter group 147
panel firmware version 41, 45
panel loss, fault code 245
parameter
  analog input scale, fault code 248
  analog output scale, fault code 248
  change lock 121
  descriptions 98
  external relay output, fault code 248
  fieldbus, fault code 248
  hz rpm, fault code 248
  listing (ranges, resolutions, defaults) 85
  PCU 1 (power control unit), fault code 249
  PCU 2 (power control unit), fault code 248
  PFC IO, fault code 249
  PFC mode, fault code 248
  PFC ref. neg., fault code 248
  save changes 122
  table version, parameter 146
  user load curve, fault code 249
  view, parameter 124
parameter mode
  Assistant Control Panel 49
  Basic Control Panel 67
parameter restore
  Assistant Control Panel 58
  Basic Control Panel 69
parity
  (RS-232), parameter 172
  errors (count), parameter 172
patents 295
PE earth
  earth fault, parameter 141
PE earth connection
  terminal size 268
  torque 268
PELV (Protective Extra Low Voltage) 23
PFC
  control, parameter group 175
  acceleration time, parameter 186
  aux start order, parameter 186
  aux. motor start delay, parameter 177
  aux. motor stop delay, parameter 177
  deceleration time, parameter 186
  enable, parameter 185
  low frequency, parameters 177
  macro 78
  number of aux. motors, parameter 178
  number of motors parameter 186
  reference step, parameters 175
  start delay, parameter 185
  start frequency, parameters 176

PID
process sets, parameter groups 159
external / trimming, parameter group 168
0% (actual signal), parameter 162
100% (actual signal), parameter 162
actual input select, parameters 164
actual value max., parameters 164
actual value min., parameters 164
adjustment procedure 160
comm value 1, data parameter 103
comm value 2, data parameter 103
control macro 77
correction source, parameter 169
decimal point (actual signal), parameter . . . 161
derivation filter, parameter 161
derivation time, parameter 161
deviation, data parameter 101
error feedback inversion, parameter 161
external source activate, parameter 168
feedback multiplier, parameter 163
feedback select, parameter 163
feedback, data parameter 101
gain, parameter 160
integration time, parameter 161
internal setpoint, parameter 163
offset, parameter 168
output, data parameter 101
parameter set select, parameter 166
scaling (0…100%), parameters 162
setpoint maximum, parameter 163
setpoint minimum, parameter 163
setpoint select, parameter 162
setpoint source, EFB comm activate 196
setpoint source, FBA comm, activate 228
setpoint, data parameter 101
sleep delay, parameter 165
sleep level, parameter 165
sleep selection, parameter 164
trim mode, parameter 168
trim scale, parameter 168
units (actual signal), parameter 161
wake-up delay, parameter 165
wake-up deviation, parameter 165
PID controller
advanced set-up 160
basic set-up 159
planning
EFB comm 190
FBA comm 223
PNP 23
power
consumption (MWh) maintenance trigger . . 139
data parameter 100
previous faults, history parameters 106
process PID sets, parameter groups 159
process variables, data parameter 102
product
inquiries 309
training 309
profiles, EFB comm 202
proportional gain, parameter 133
protection
circuit, required w/ chopper 280
disconnecting device (disconnecting means) 263
enclosure standard 291
environmental 289
motor thermal 273
PT100 temperature sensor 151
PTC temperature sensor 151

R

radiation limits, conducted
EN 61800-3 275
ramp pair (accel/decel), parameter 131
range listing for parameters 85
ratings 259
reference
select, parameter group 109
corrections for parameter values 110
keypad control, parameter 109
maximum, parameters 111
minimum, parameters 111
mode (Basic Control Panel) 66
select source, parameter 109
step (PFC), parameters 175
reference scaling
EFB, ABB drives profile 218
FBA, ABB drives profile 236
FBA, generic profile 240
reference setting
Assistant Control Panel 48
Basic Control Panel 66
regulator by-pass control, parameter 185
relative humidity
environment limit 289
shipping limit 289
relay output
parameter group 116
activation condition parameters 116
off-delay, parameters 117
on-delay, parameters 117
status, data parameter 101
relays, specifications 281
REM (remote control)
indication on Assistant Control Panel 43
indication on Basic Control Panel 62
remove cover 16
reset, automatic
parameter group 143
analog input less than min., parameter 143
delay time, parameter 143
external fault, parameter 143
number of trials, parameter 143
overcurrent, parameter 143
trial time, parameter 143
undervoltage, parameter 143
resolution listing for parameters 85
resonance (avoiding)
select, parameter 136
revolution counter, data parameter 102
revolutions, mechanical, data parameter 102
ring lugs 269

RS-232
baud rate, parameter . . . 172
parity, parameter . . . 172
station id, parameter . . . 172
RS-232 counts
buffer overruns, parameter . . . 172
CRC errors, parameter . . . 172
frame errors, parameter . . . 172
ok messages, parameter . . . 172
parity errors, parameter . . . 172
RS485 comm . . . 190
run enable source select, parameter . . . 121
run time
data parameter . . . 100, 102
maintenance trigger . . . 139

S

safety . . . 5
save changes parameter . . . 122
scalar:frequency mode . . . 98
scaling
actual value, FBA, ABB drives profile . . . 239
actual value, FBA, generic profile . . . 241
actual values, EFB comm . . . 197
reference, EFB, ABB drives profile . . . 218
reference, FBA, ABB drives profile . . . 236
reference, FBA, generic profile . . . 240
screw-on terminal lugs . . . 270
s-curve ramp, parameter . . . 131
second environment
(C3), compliance with IEC/EN 61800-3 . . . 293
(C3), motor cable length . . . 272
definition . . . 293
sensor type, parameter . . . 151
sensorless vector control mode . . . 98
serial 1 error (fault code 28) . . . 200
serial 1 error, fault code . . . 247
serial communication
see EFB (embedded fieldbus)
see EFB, drive parameters
see FBA (fieldbus adapter)
see FBA, drive parameters
serial number . . . 12, 13
service . . . 309
setpoint maximum (PID), parameter . . . 163
setpoint minimum (PID), parameter . . . 163
setpoint select (PID), parameter . . . 162
shock, stress testing . . . 290
short circuit, fault code . . . 245
single phase supply
connection . . . 18
derating . . . 262
sleep selection (PID), parameter . . . 164
slip compensation ratio, parameter . . . 138
soft keys (Assistant Control Panel) . . . 42
specifications
control connections . . . 281
input power . . . 263
mains . . . 263
speed
and direction (signed), data parameter . . . 100
at fault, history parameter . . . 106
data parameter . . . 100
max. limit, parameter . . . 125
min. limit, parameter . . . 125
speed control
parameter group . . . 133
acceleration compensation, parameter . . . 134
automatic tuning, parameter . . . 133, 134
derivation time, parameter . . . 133
integration time, parameter . . . 133
proportional gain, parameter . . . 133
vector:speed mode . . . 98
speed, constant
parameter group . . . 112
digital input selection parameter . . . 112
parameters . . . 113
stall
frequency, fault parameter . . . 141
function, fault parameter . . . 141
region . . . 141
time, fault parameter . . . 141
standards . . . 291
C22.2 No. 14 . . . 291
CE marking . . . 291
CSA marking . . . 292
C-Tick marking . . . 291
EN 50178 . . . 291
IEC 60664-1 . . . 291
IEC/EN 60204-1 . . . 291
IEC/EN 60529 . . . 291
IEC/EN 61800-3 . . . 291
IEC/EN 61800-5-1 . . . 291
UL 508C . . . 291
UL marking . . . 292
start
parameter group . . . 128
aux. motor (PFC), parameters . . . 176
aux. motor delay . . . 177
control, EFB comm . . . 193
control, FBA comm . . . 225
DC magnetizing time, parameter . . . 128
delay (PFC), parameter . . . 185
delay, parameter . . . 130
frequency (PFC), parameters . . . 176
function, parameter . . . 128
inhibit, parameter . . . 129
select enable source, parameter . . . 123
torque boost current, parameter . . . 129
start mode
automatic . . . 128
automatic torque boost . . . 128
DC magnetizing . . . 128
flying start . . . 128
start/stop
parameter group . . . 128
with Assistant Control Panel . . . 46
with Basic Control Panel . . . 64
start/stop/dir, parameter group . . . 107
starting order counter . . . 180

start-up
assistant 36, 51
data, parameter group 98
guided, Assistant Control Panel 36
limited, Assistant or Basic Control Panel . . . 31
state diagram
comm (EFB) 217
comm, ABB drives 235
station id (RS-232), parameter 172
status at fault, history parameter 106
status word
ABB drives, FBA, description 233
EFB comm, definition 212
FBA 223
FBA generic profile 240
stop
parameter group 128
aux. motor (PFC), parameters 177
aux. motor delay 177
DC brake time, parameter 129
DC current control, parameter 128
DC current ref., parameter 129
emergency devices 265
emergency select, parameter 129
flux braking, parameter 137
function, parameter 128
stress tests 290
supervision
parameter group 144
parameter low limit, parameters 144
parameter selection, parameters 144
supply phase, fault code 246
switching frequency 271
control, parameter 138
derating 262
parameter 138
symmetrically grounded network
see corner grounded TN system
system controls, parameter group 121

T

temperature derating 262
template, mounting 16
terminal lugs 270
terminals
control, description 22
control, specifications 282
location diagram, R1…R4 20
location diagram, R5/R6 21
termination 191
test date, parameter 146
thermal fail, fault code 246
timed functions
parameter group 152
autochange, parameter 186
booster, parameter 154
enable, parameter 153
source, parameter 154
speed control 114
start time, parameter 153
stop time, parameter 153
timed mode, parameter 114
tools 14
top cover, see hood
torque
at fault, history parameter 106
boost current, parameter 129
data parameter 100
max. limit select, parameter 126
max. limit, parameter 127
min. limit select, parameter 126
min. limit, parameters 126
ramp down, parameter 135
ramp up, parameter 135
torque control
parameter group 135
macro 79
ramp down, parameter 135
ramp up, parameter 135
vector:torque mode 98
training 309
trim
mode (PID), parameter 168
scale (PID), parameter 168
two-wire sensor, connection example 80
type code 12, 13

U

U/f ratio, parameter 137
UL/CSA markings 292
underload curve
see user load curve
undervoltage
automatic reset, parameter 143
control enable, parameter 125
ungrounded network
see IT system
units (PID), parameter 161
unknown drive type, fault code 248
unpacking drive 12
unsymmetrically grounded networks
see corner grounded TN system
user load curve
parameter group 156
fault code 247
frequency, parameters 156, 157
function, parameter 156
mode, parameter 156
time, parameter 156
torque, parameters 156, 157
user parameter set 81
change control, parameter 122
download 58

V

vector:
speed mode 98
torque mode 98
version
firmware, parameter 60, 146
loading package, parameter 146
panel firmware 41, 45
parameter table, parameter 146

vibration, stress testing 290
voltage
at fault, history parameter 106
rating code 13
voltage/frequency ratio, parameter 137

W

wake-up
delay (PID), parameter 165
deviation (PID), parameter 165
warning
automatic start up 6
dangerous voltages 5
disconnecting device (disconnecting means) . 6
ELV (Extra Low Voltage) 23
EM1, EM3, F1 and F2 screws. 6
filter on corner grounded TN system. 6
filter on IT system 6
high temperatures. 6
listing. 5
not field repairable 6
parallel control connections 5
qualified installer 5
weight 288
wiring
control 22
fault, parameter. 142
installation. 24
installation steps, IP21/cables 25
installation steps, IP21/conduit 26
installation steps, IP54/cables 27
installation steps, IP54/conduit 28
overview 18
requirements, general 18

XYZ

zero pulse
detected, data parameter 102
enable, parameter. 170
zero speed
delay, parameter. 130
load, fault parameter. 141

Contact ABB

Product and service inquiries

Address any inquiries about the product to your local ABB representative, quoting the type code and serial number of the drive in question. A listing of ABB sales, support and service contacts can be found by navigating to www.abb.com/drives and selecting *Drives – World wide service contacts* on the right pane.

Product training

For information on ABB product training, navigate to www.abb.com/drives and select *Drives – Training courses* on the right pane.

Providing feedback on ABB Drives manuals

Your comments on our manuals are welcome. Go to www.abb.com/drives, then select successively *Drives – Document Library – Manuals feedback form (LV AC drives)* on the right pane.

3AUA0000001418 Rev F
EFFECTIVE: 4/16/2007
SUPERSEDES: 3AUA0000001418 Rev E 12/6/2004

ABB Oy
AC Drives
P.O. Box 184
FI-00381 HELSINKI
FINLAND
Telephone +358 10 22 11
Fax +358 10 22 22681
Internet www.abb.com

ABB Inc.
Automation Technologies
Drives & Motors
16250 West Glendale Drive
New Berlin, WI 53151
USA
Telephone +1 262 785-3200
+1 800-HELP-365
Fax +1 262 780-5135

ABB Beijing Drive Systems Co. Ltd.
No. 1, Block D, A-10 Jiuxianqiao Beilu
Chaoyang District
Beijing, P.R. China, 100015
Telephone +86 10 5821 7788
Fax +86 10 5821 7618
Internet www.abb.com

PHOTOIONIZATION DETECTOR

RAE SYSTEMS

MINIRAE 3000

MiniRAE 3000
User's Guide

RAE SYSTEMS by Honeywell

Rev. F
February 2016
P/N 059-4020-000

FCC Information

Contains FCC ID: PI4411B or SU3RM900

The enclosed device complies with part 15 of the FCC rules. Operation is subject to the following conditions: (1) This device may not cause harmful interference, and (2) This device must accept any interference received, including interference that may cause undesired operation.

Wireless Approval For UAE In Middle East

TRA REGISTERED No: ER36153/14 or ER36153/15
DEALER No.: HONEYWELL INTERNATIONAL MIDDLE EAST – LTD – DUBAI BR

Wireless Approval For QATAR In Middle East

ictQATAR
Type Approval Reg. No.: R-4466 or R-4635

© Copyright 2016 RAE Systems by Honeywell

Contents

Read Before Operating 6
Special Notes 7
Warnings 8
Standard Contents 10
General Information 10
Physical Description 12
Specifications 12
Charging The Battery 16
Charging A Spare Rechargeable Battery 17
Low Voltage Warning 18
Clock Battery 18
Data Protection While Power Is Off 18
User Interface 19
Display 21
Operating The Instrument 22
Turning The Instrument On 22
Turning The Instrument Off 23
Operating The Built-In Flashlight 23
Pump Status 23
Calibration Status 24
Operating Modes 29
Basic User Level/Hygiene Mode (Default Settings) 30
Alarm Signals 32
Alarm Signal Summary 33
Preset Alarm Limits & Calibration 34
Testing The Alarm 34
Integrated Sampling Pump 34
Backlight 35
Datalogging 35
Datalogging event 35
Datalogging sample 35
Auto/Manual/Snapshot Datalogging 36
Standard Kit & Accessories 37
AC Adapter (Battery Charger) 37
Alkaline Battery Adapter 38
External Filter 39

Optional Accessories 40
Calibration Adapter 40
Calibration Regulator 40
Organic Vapor Zeroing Kit 40
Standard Two-Point Calibration (Zero & Span) 41
Entering Calibration 42
Zero (Fresh Air) Calibration 44
Span Calibration 46
Exiting Two-Point Calibration In Basic User Level 48
Three-Point Calibration 49
Span 2 Calibration 50
Exiting Three-Point Calibration 53
Bump Test 48
Programming Mode 53
Entering Programming Mode 54
Programming Mode Menus 56
Zero Calibration 57
Meas. Gas 57
High Alarm 57
Clear Datalog 57
Radio 57
Power 57
Span Calibration 57
Meas. Unit 57
Low Alarm 57
Interval 57
Op Mode 57
Bump 57
STEL Alarm 57
Data Selection 57
Site ID 57
TWA Alarm 57
Datalog Type 57
User ID 57
Alarm Mode 57
User Mode 57
Buzzer & Light 57
Date 57
Time 57

Pump Duty Cycle 57
Pump Speed 57
Temperature Unit 57
Language 57
Real Time Protocol 57
Power On Zero 57
Unit ID 57
LCD Contrast 57
Lamp ID 57
PAN ID 57
Mesh Channel 57
Mesh Interval 57
Exiting Programming Mode 58
Navigating Programming Mode Menus 58
Calibration 59
  Zero Calibration 59
  Span Calibration 59
  Bump 59
Measurement 60
  Meas. Gas 60
  Meas. Unit 61
Alarm Setting 62
  High Alarm 63
  Low Alarm 63
  STEL Alarm 64
  TWA Alarm 65
  Alarm Type 66
  Buzzer & Light 67
Datalog 67
  Interval 68
  Data Selection 69
  Datalog Type 70
  Manual Datalog 70
  Snapshot Datalog 71
Monitor Setup 72
  Radio Power 72
  Op Mode 73
Hygiene 73
Search 73

Site ID 73
User ID 74
User Mode 74
Date 75
Time 76
Pump Duty Cycle 76
Pump Speed 77
Temperature Unit 77
Language 78
Real Time Protocol 78
Power On Zero 79
Unit ID 79
LCD Contrast 80
Lamp ID 80
PAN ID 80
Mesh Channel 81
Mesh Interval 81
Hygiene Mode 82
Advanced User Level (Hygiene Mode Or Search Mode) 86
Advanced User Level & Hygiene Mode 86
Basic User Level & Search Mode 88
Advanced User Level & Search Mode 89
Diagnostic Mode 90
Entering Diagnostic Mode 91
Adjusting The Pump Stall Threshold 92
Pump High 92
Pump Low 92
Exiting Diagnostic Mode 93
Transferring Data To & From A Computer 94
Downloading The Datalog To A PC 94
Connection. 94
Uploading Firmware To The instrument From A PC 95
Maintenance 96
Battery Charging & Replacement 96
Replacing The Li-ion Battery 97
Replacing The Alkaline Battery Adapter 97
PID Sensor & Lamp Cleaning/Replacement 99
Sensor Components 99
Cleaning The Lamp Housing Or Changing The Lamp 100

Determining The Lamp Type 101
Sampling Pump 102
Cleaning The Instrument 102
Ordering Replacement Parts 102
Special Servicing Note 103
Troubleshooting 104
Technical Support 105
RAE Systems Contacts 106
Controlled Part of Manual 107
Basic Operation 107
Turning The Instrument On 107
Turning The Instrument Off 107
Alarm Signals 108
Alarm Signal Summary 108
Preset Alarm Limits & Calibration 109
Charging The Battery 110
Low Voltage Warning 111
Clock Battery 111
Replacing Rechargeable Li-Ion or NiMH Battery 112
Alkaline Battery Adapter 112
Troubleshooting 113

Read Before Operating

This manual must be carefully read by all individuals who have or will have the responsibility of using, maintaining, or servicing this product. The product will perform as designed only if it is used, maintained, and serviced in accordance with the manufacturer's instructions. The user should understand how to set the correct parameters and interpret the obtained results.

CAUTION!

To reduce the risk of electric shock, turn the power off before removing the instrument cover. Disconnect the battery before removing sensor module for service. Never operate the instrument when the cover is removed. Remove instrument cover and sensor module only in an area known to be non-hazardous.

Special Notes

When the instrument is taken out of the transport case and turned on for the first time, there may be some residual organic or inorganic vapor trapped inside the detector chamber. The initial PID sensor reading may indicate a few ppm. Enter an area known to be free of any organic vapor and turn on the instrument. After running for several minutes, the residual vapor in the detector chamber will be cleared and the reading should return to zero.

The battery of the instrument discharges slowly even if it is turned off. If the instrument has not been charged for 5 to 7 days, the battery voltage will be low. Therefore, it is a good practice to always charge the instrument before using it. It is also recommended to fully charge the instrument for *at least 10 hours* before first use. Refer to this User Guide's section on battery charging for more information on battery charging and replacement.

WARNINGS

STATIC HAZARD: Clean only with damp cloth.

For safety reasons, this equipment must be operated and serviced by qualified personnel only. Read and understand instruction manual completely before operating or servicing.

Use only RAE Systems battery packs, part numbers 059-3051-000, 059-3052-000, and 059-3054-000. This instrument has not been tested in an explosive gas/air atmosphere having an oxygen concentration greater than 21%. Substitution of components may impair intrinsic safety. Recharge batteries only in non-hazardous locations.

Do not mix old and new batteries or batteries from different manufacturers.

The calibration of all newly purchased RAE Systems instruments should be tested by exposing the sensor(s) to known concentration calibration gas before the instrument is put into service.

For maximum safety, the accuracy of the instrument should be checked by exposing it to a known concentration calibration gas before each day's use.

Do not use USB/PC communication in hazardous locations.

AVERTISSEMENT

DANGER RISQUE D'ORIGINE ELECTROSTATIQUE: Nettoyer uniquement avec un chiffon humide.

Pour des raisons de sécurité, cet équipment doit être utilisé, entretenu et réparé uniquement par un personnel qualifié. Étudier le manuel d'instructions en entier avant d'utiliser, d'entretenir ou de réparer l'équipement.

Utiliser seulement l'ensemble de batterie RAE Systems, la reference 059-3051-000 au 059-3052-000 au 059-3054-000. Cet instrument n'a pas été essayé dans une atmosphère de gaz/air explosive ayant une concentration d'oxygène plus élevée que 21%. La substitution de composants peut compromettre la sécurité intrinsique. Ne charger les batteries que dans emplacements désignés non-dangereuse.

Ne pas melanger les anciennes et les nouvelles batteries, ou bien encore les batteries de differents fabriquants.

La calibration de toute instruments de RAE Systems doivent être testé en exposant l'instrument a une concentration de gaz connue par une procédure diétalonnage avant de mettre en service l'instrument pour la première fois.

Pour une securite maximale, la sensibilité du l'instrument doit être verifier en exposant l'instrument a une concentration de gaz connue par une procédure diétalonnage avant chaque utilisation journalière.

Ne pas utiliser de connection USB/PC en zone dangereuse.

Standard Contents

Instrument
Calibration Kit
Charging Cradle
AC/DC Adapter
Alkaline Battery Adapter
Data Cable
CD-ROM With User's Guide, Quick Start Guide, and related materials

General Information

The compact instrument is designed as a broadband VOC gas monitor and datalogger for work in hazardous environments. It monitors Volatile Organic Compounds (VOC) using a photoionization detector (PID) with a 9.8 eV, 10.6 eV, or 11.7 eV gas-discharge lamp. Features are:

Lightweight and Compact

- Compact, lightweight, rugged design
- Built-in sample draw pump

Dependable and Accurate

- Up to 16 hours of continuous monitoring with rechargeable battery pack
- Designed to continuously monitor VOC vapor at parts-per-million (ppm) levels

User-friendly

- Preset alarm thresholds for STEL, TWA, low- and high-level peak values.
- Audio buzzer and flashing LED display are activated when the limits are exceeded.

Datalogging Capabilities

- 260,000-point datalogging storage capacity for data download to PC

The instrument consists of a PID with associated microcomputer and electronic circuit. The unit is housed in a rugged case with a backlit LCD and 3 keys to provide easy user interface. It also has a built-in flashlight for operational ease in dark locations.

Physical Description

The main components of the portable VOC monitoring instrument include:

- Three keys for user to interact with the instrument: 3 operation/programming keys for normal operation or programming
- LCD display with back light for direct readout and calculated measurements
- Built-in flashlight for illuminating testing points in dark environments
- Buzzer and red LEDs for alarm signaling whenever exposures exceed preset limits
- Charge contacts for plugging directly to its charging station
- Gas entry and exit ports
- USB communication port for PC interface
- Protective rubber cover

Specifications

Size:	9.25" L x 3.6" W x 2.9" H
Weight:	28 oz with battery pack
Detector:	Photoionization sensor with 9.8, 10.6, or 11.7 eV UV lamp
Battery:	A 3.7V rechargeable Lithium-Ion battery pack (snap in, field replaceable, at non-hazardous location only)
	Alkaline battery holder (for 4 AA batteries)
Battery Charging:	Less than 8 hours to full charge
Operating Hours:	Up to16 hours continuous operation
Display:	Large dot matrix screen with backlight

Measurement range & resolution

Lamp	Range	Resolution
10.6 eV	0.1 ppm to 15,000 ppm	0.1 ppm
9.8 eV	0.1 ppm to 5,000 ppm	0.1 ppm
11.7 eV	0.1 ppm to 2,000 ppm	0.1 ppm

Response time (T_{90}): 2 seconds

Accuracy (Isobutylene): 10 to 2000 ppm: ±3% at calibration point.

PID Detector: Easy access to lamp and sensor for cleaning and replacement

Correction Factors: Over 200 VOC gases built in (based on RAE Systems Technical Note TN-106)

Calibration: Two-point field calibration of zero and standard reference gases

Calibration Reference: Store up to 8 sets of calibration data, alarm limits and span values

Inlet Probe: Flexible 5" tubing

Radio module: Bluetooth (2.4GHz) or RF module (433MHz, 868MHz , 915MHz, or 2.4GHz)

Keypad: 1 operation key and 2 programming keys; 1 flashlight switch

Direct Readout: Instantaneous, average, STEL, TWA and peak value, and battery voltage

Intrinsic Safety: US and Canada: Class I, Division 1, Groups A, B, C, D

Europe: ATEX (0575 Ex II 2G Ex ia IIC/IIB T4 Gb)
KEMA 07 ATEX 0127
Complies with EN60079-0:2009, EN60079-11:2007

	IECEx CSA 10.0005 Ex ia IIC/IIB T4 Gb Complies with IEC 60079-0:2007, IEC 60079-11:2006 (IIC: 059-3051-000 Li-ion bat pack or 059-3054-000 NiMH bat pack; IIB: 059-3052-000 alkaline bat pack)
EM Interference:	Highly resistant to EMI/RFI. Compliant with EMC R&TTE (RF Modules)
Alarm Setting:	Separate alarm limit settings for Low, High, STEL and TWA alarm
Operating Mode:	Hygiene or Search mode
Alarm:	Buzzer 95dB at 30cm and flashing red LEDs to indicate exceeded preset limits, low battery voltage, or sensor failure
Alarm Type:	Latching or automatic reset
Real-time Clock:	Automatic date and time stamps on datalogged information
Datalogging:	260,000 points with time stamp, serial number, user ID, site ID, etc.
Communication:	Upload data to PC and download instrument setup from PC via USB on charging station.
Sampling Pump:	Internally integrated. Flow rate: 450 to 550 cc/min.
Wireless Network:	Mesh RAE Systems Dedicated Wireless Network (or WiFi network for WiFi-equipped instruments)
Wireless Frequency:	ISM license-free band, 902 to 907.5 MHz and 915 to 928 MHz, FCC Part 15, CE R&TTE, IEEE 802.11 b/g bands (2.4 GHz)
Modulation:	802.15.4 DSSS BPSK
RF Power (Tx):	10dBm
Temperature:	-20º C to 50º C (-4º to 122º F)

Humidity:	0% to 95% relative humidity (non-condensing)
Housing (including rubber boot):	Polycarbonate, splashproof and dustproof Battery can be changed without removing rubber boot.

Charging The Battery

Always fully charge the battery before using the instrument. The instrument's Li-ion battery is charged by placing the instrument in its cradle. (The battery can also be charged by placing the instrument in an AutoRAE 2 Cradle.) Contacts on the bottom of the instrument meet the cradle's contacts, transferring power without other connections.

Note: Before setting the instrument into its charging cradle, visually inspect the contacts to make sure they are clean. If they are not, wipe them with a soft cloth. Do not use solvents or cleaners.

Follow this procedure to charge the instrument:

1. Plug the AC/DC adapter's barrel connector into the instrument's cradle.

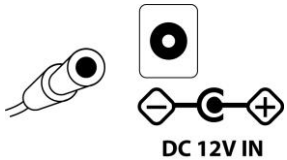

2. Plug the AC/DC adapter into the wall outlet.
3. Place the instrument into the cradle, press down, and lean it back. It locks in place and the LED in the cradle glow

The instrument begins charging automatically. The "Primary" LED in the cradle blinks green to indicate charging. During charging, the diagonal lines in the battery icon on the instrument's display are animated and you see the message "Charging..."

When the instrument's battery is fully charged, the battery icon is no longer animated and shows a full battery. The message "Fully charged!" is shown. The cradle's LED glows continuously green.

Note: If you see the "Battery Charging Error" icon (a battery outline with an exclamation mark inside), check that the

instrument or rechargeable battery has been set into the cradle properly. If you still receive the message, check the Troubleshooting section of this guide.

Note: If the instrument or battery has been in the cradle for more than 10 hours and you see the "Battery Charging Error" icon and a message that says, "Charging Too Long," this indicates that the battery is not reaching a full charge. Try changing the battery and make sure the contacts between the instrument (or battery) are meeting the cradle. If the message is still shown, consult your distributor or RAE Systems Technical Services.

Charging A Spare Rechargeable Battery

A rechargeable Li-ion battery can be charged when it is not inside the monitor. The charging cradle is designed to accommodate both types of charging. Contacts on the bottom of the battery meet the contacts on the cradle, transferring power without other connections, and a spring-loaded capture holds the battery in place during charging.

1. Plug the AC/DC adapter into the monitor's cradle.
2. Place the battery into the cradle, with the gold-plated contacts on top of the six matching charging pins.
3. Plug the AC/DC adapter into the wall outlet.

The battery begins charging automatically. During charging, the Secondary LED in the cradle blinks green. When charging is complete, it glows steady green.

Release the battery from the cradle by pulling it back toward the rear of the cradle and tilting it out of its slot.

Note: If you need to replace the Li-ion battery pack, replacements are available from RAE Systems. The part number is 059-3051-000.

Note: An Alkaline Battery Adapter (part number 059-3052-000), which uses four AA alkaline batteries (Duracell MN1500), may be substituted for the Li-Ion battery.

WARNING!

To reduce the risk of ignition of hazardous atmospheres, recharge and replace batteries only in areas known to be non-hazardous. **Remove and replace batteries only in areas known to be non-hazardous.**

Low Voltage Warning

When the battery's charge falls below a preset voltage, the instrument warns you by beeping once and flashing once every minute, and the "empty battery" icon blinks on and off once per second. You should turn off the instrument within 10 minutes and either recharge the battery by placing the instrument in its cradle, or replace the battery with a fresh one with a full charge.

Clock Battery

An internal clock battery is mounted on one of the instrument's printed circuit boards. This long-life battery keeps settings in memory from being lost whenever the Li-ion battery or alkaline batteries are removed. This backup battery should last approximately five years, and must be replaced by an authorized RAE Systems service technician. It is not user-replaceable.

Data Protection While Power Is Off

When the instrument is turned off, all the current real-time data including last measured values are erased. However, the datalog data is preserved in non-volatile memory. Even if the battery is disconnected, the datalog data will not be lost.

User Interface

The instrument's user interface consists of the display, LEDs, an alarm transducer, and four keys. The keys are:

Y/+
MODE
N/-
Flashlight on/off

The LCD display provides visual feedback that includes the reading, time, battery condition, and other functions.

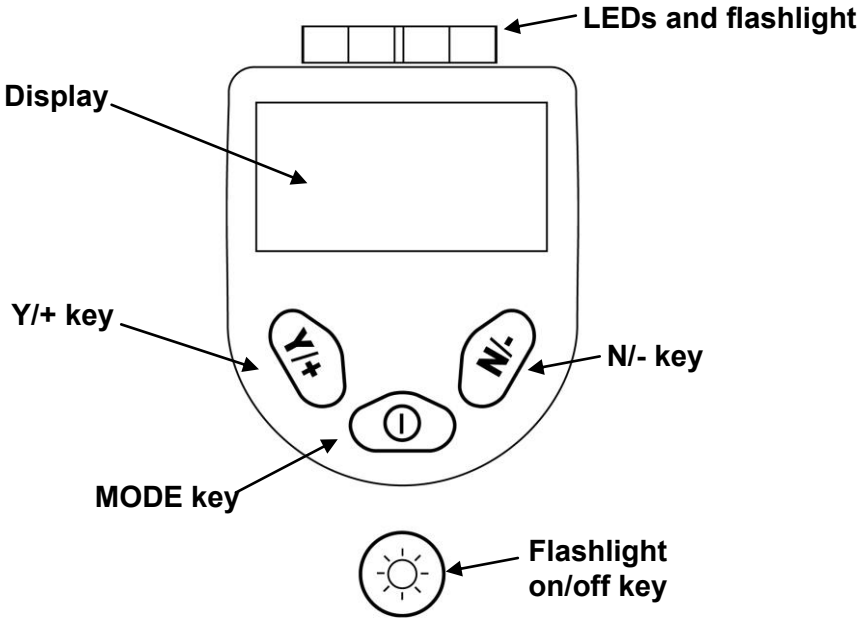

In addition to their labeled functions, the keys labeled Y/+, MODE, and N/- act as "soft keys" that control different parameters and make different selections within the instrument's menus. From menu to menu, each key controls a different parameter or makes a different selection.

Three panes along the bottom of the display are "mapped" to the keys. These change as menus change, but at all times the left pane corresponds to the [Y/+] key, the center pane corresponds to the [MODE] key, and the right pane corresponds to the [N/-] key. Here are three examples of different menus with the relationships of the keys clearly shown:

RELATIONSHIP OF BUTTONS TO CONTROL FUNCTIONS

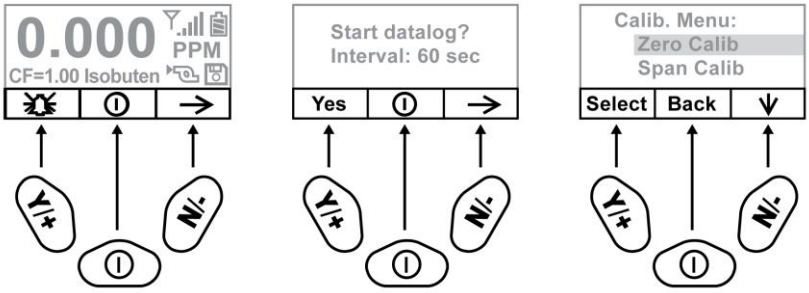

Display

The display shows the following information:

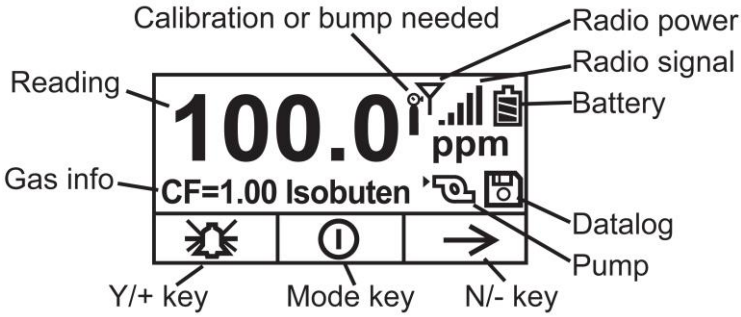

Gas info	Tells the Correction Factor and type of calibration gas
Reading	Concentration of gas as measured by the instrument
Calibration or bump needed	Dark icon indicates that calibration should be performed; light icon indicates bump should be performed
Radio power	Indicates whether radio (Mesh wireless or Bluetooth) connection is on or off
Radio signal	Indicates signal strength in 5-bar bargraph
Battery	Indicates battery level in 3 bars
Pump	Indicates that pump is working
Datalog	Indicates whether datalog is on or off
Y/+	Y/+ key's function for this screen
MODE	MODE key's function for this screen
N/-	N/- key's function for this screen

Operating The Instrument

The instrument is designed as a broadband VOC gas monitor and datalogger for work in hazardous environments. It gives real-time measurements and activates alarm signals whenever the exposure exceeds preset limits. Prior to factory shipment, the instrument is preset with default alarm limits and the sensor is pre-calibrated with standard calibration gas. However, you should test the instrument and verify the calibration before the first use. After the instrument is fully charged and calibrated, it is ready for immediate operation.

Turning The Instrument On

1. With the instrument turned off, press and hold [MODE].
2. When the display turns on, release the [MODE] key.

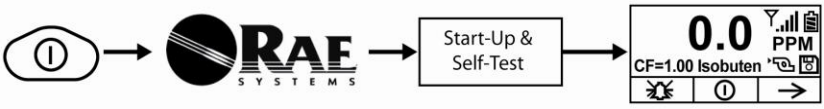

The RAE Systems logo should appear first. (If the logo does not appear, there is likely a problem and you should contact your distributor or RAE Systems Technical Support.) The instrument is now operating and performs self tests. If any tests (including sensor and memory tests fail), refer to the Troubleshooting section of this guide.

Once the startup procedure is complete, the instrument shows a numerical reading screen with icons. This indicates that the instrument is fully functional and ready to use.

Turning The Instrument Off

1. Press and hold the Mode key for 3 seconds. A 5-second countdown to shutoff begins.
2. Once the countdown stops, the instrument is off. Release the Mode key.
3. When you see "Unit off..." release your finger from the [MODE] key. The instrument is now off.

Note: You must hold your finger on the key for the entire shutoff process. If you remove your finger from the key during the countdown, the shutoff operation is canceled and the instrument continues normal operation.

Operating The Built-In Flashlight

The instrument has a built-in flashlight that helps you point the probe in dark places. Press the flashlight key to turn it on. Press it again to turn it off.

Note: Using the flashlight for extended periods shortens the battery's operating time before it needs recharging.

Pump Status

IMPORTANT!

During operation, make sure the probe inlet and the gas outlet are free of obstructions. Obstructions can cause premature wear on the pump, false readings, or pump stalling. During normal operation, the pump icon alternately shows inflow and outflow as shown here:

During duty cycling (PID lamp cleaning), the display shows these icons in alternation:

If there is a pump failure or obstruction that disrupts the pump, you will see this icon blinking on and off:

If you see this blinking icon, consult the Troubleshooting section of this guide.

Calibration Status

The instrument displays this icon if it requires calibration:

Calibration is required (and indicated by this icon) if:

- The lamp type has been changed (for example, from 10.6 eV to 9.8 eV).
- The sensor has been replaced.
- It has been 30 days or more since the instrument was last calibrated.
- If you have changed the calibration gas type without recalibrating the instrument.

Bump Status

The instrument displays this icon if it requires a bump test:

A bump test is required (and indicated by this icon) if:

- The defined period of time between bump tests has been exceeded (bump test overdue).
- The sensor has failed a previous bump test.
- The sensor(s) should be challenged on a periodic basis.

Policy Enforcement

The MiniRAE 3000 can be configured to enforce a facility/company's requirements that calibration and/or bump testing be performed at specified intervals, and to explicitly prompt the user that calibration/bump testing is required. Depending on how Policy Enforcement features are configured, the user may be required to perform a bump test or calibration prior to being able to use the instrument. That is, it can be set to not allow normal operation of the instrument unless calibration or bump testing is performed.

If the instrument has been bump tested and calibrated in compliance with the policy settings, a check-mark icon is included along the top of the MiniRAE 3000 screen:

If Policy Enforcement is enabled, then after startup the MiniRAE 3000 displays a screen that informs the user that the instrument requires either a bump test or a calibration. If both are required, then they are shown in sequence.

Note: Policy enforcement features are disabled by default.

Setting Policy Enforcement

You must use ProRAE Studio II to make changes to Policy Enforcement settings. You must use an AutoRAE 2 Cradle, a MiniRAE 3000 Travel Charger, or a MiniRAE 3000 Desktop Cradle. Policy violations are captured in the datalog.

Using The Travel Charger, Desktop Charger, or AutoRAE 2 Automatic Test And Calibration System

To program a MiniRAE 3000 via an AutoRAE 2, you need ProRAE Studio II Instrument Configuration and Data Management Software, the AutoRAE 2 connected to a power source, and a USB PC communications cable.

1. Connect a USB cable between a PC with ProRAE Studio II and the AutoRAE 2 Cradle, Travel Charger, or Desktop Cradle.
2. Apply power to the AutoRAE 2 Cradle, Travel Charger, or Desktop Cradle.
3. Turn off the MiniRAE 3000 (or put the MiniRAE 3000 into AutoRAE 2 Mode or Communication Mode) and set it in the cradle.
4. Start ProRAE Studio II software on the PC.
5. Select "Administrator" and input the password (the default is "rae").
6. Click "Detect the instruments automatically" (the magnifying glass icon with the letter "A" in it). After a few seconds, the AutoRAE 2 Cradle is found and it is shown, along with its serial number.
7. Click on the icon to highlight it, and then click "Select."
8. In ProRAE Studio II, the instrument or AutoRAE 2 Cradle is shown, including its Serial Number, under "Online."
9. Expand the view to show the instrument or to show the instrument in the AutoRAE 2 Cradle by clicking the "+" to the left of the image of the AutoRAE 2 Cradle.
10. Double-click on the icon representing the MiniRAE 3000.
11. Click "Setup."
12. In the menu that now appears on the left side, click "Policy Enforcement." It is highlighted, and the Policy Enforcement pane is shown. For "Must Calibrate" and "Must Bump," you have the options of no enforcement or enforcement (including "Can't Bypass," and "Can Bypass").

Must Calibrate. The user is prompted to calibrate the instrument when calibration is due (as set by the calibration interval). There are two programmable options:

- **Can't Bypass.** Unless calibration is performed, the instrument cannot be used, and the only option is to turn off the instrument.
- **Can Bypass.** If calibration is due but the user does not want to perform a calibration, the instrument can still be used. In this case, the instrument records that the user has bypassed the calibration requirement in a Policy Violation report.

Must Bump. The user is prompted to bump test the instrument when a bump test is due (as set by the bump test interval). There are two programmable options:

- **Can't Bypass.** Unless a bump test is performed, the instrument cannot be used, and the only option is to turn off the instrument.
- **Can Bypass.** If a bump test is due but the user does not want to perform one, the instrument can still be used. In this case, the instrument records that the user has bypassed the bump testing requirement in a Policy Violation report.

These are the screens that are shown on a MiniRAE 3000 after startup if "Can Bypass" is selected:

If "Can't Bypass" is selected, the display looks like this, and only allows the options of performing the test or shutting down:

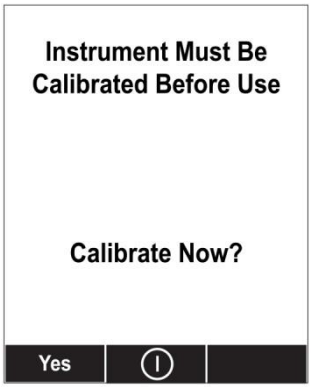

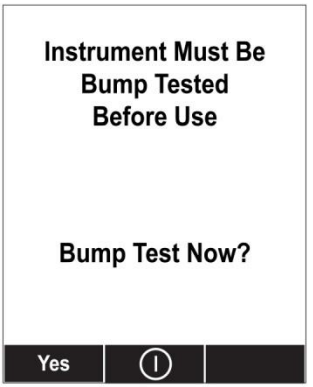

16. Once you have made your selections in ProRAE Studio II, you must upload the changes to the instrument. Click the icon labeled "Upload all settings to the instrument."

17. A confirmation screen is shown. Click "Yes" to perform the upload, or "No" to abort.
    Uploading takes a few seconds, and a progress bar is shown. You can abort the upload by clicking "Cancel."

18. Exit ProRAE Studio II.

19. Press [Y/+] on the MiniRAE 3000 to exit Communication Mode.

Operating Modes

Your instrument operates in different modes, depending on the model and its factory default settings. In some cases, you can change modes using a password and using the instrument's navigation. In other cases, you must use ProRAE Studio software.

The default setting for your instrument is:

User Mode: Basic
Operation Mode: Hygiene

This is outlined in detail on page 83.

The other options, covered later in this guide, are:

User Mode: Advanced (page 86)
Operation Mode: Hygiene

User Mode: Advanced (page 90)
Operation Mode: Search

Using ProRAE Studio allows access to other options. In addition, Diagnostic Mode (page 91) is available for service technicians.

Basic User Level/Hygiene Mode (Default Settings)

The instrument is programmed to operate in Basic User Level/Hygiene Mode as its default. This gives you the most commonly needed features while requiring the fewest parameter adjustments.

Pressing [N/-] steps you from one screen to the next, and eventually return to the main display. If you do not press a key within 60 seconds after entering a display, the instrument reverts to its main display.

Note: While viewing any of these screens, you can shut off your instrument by pressing [MODE].

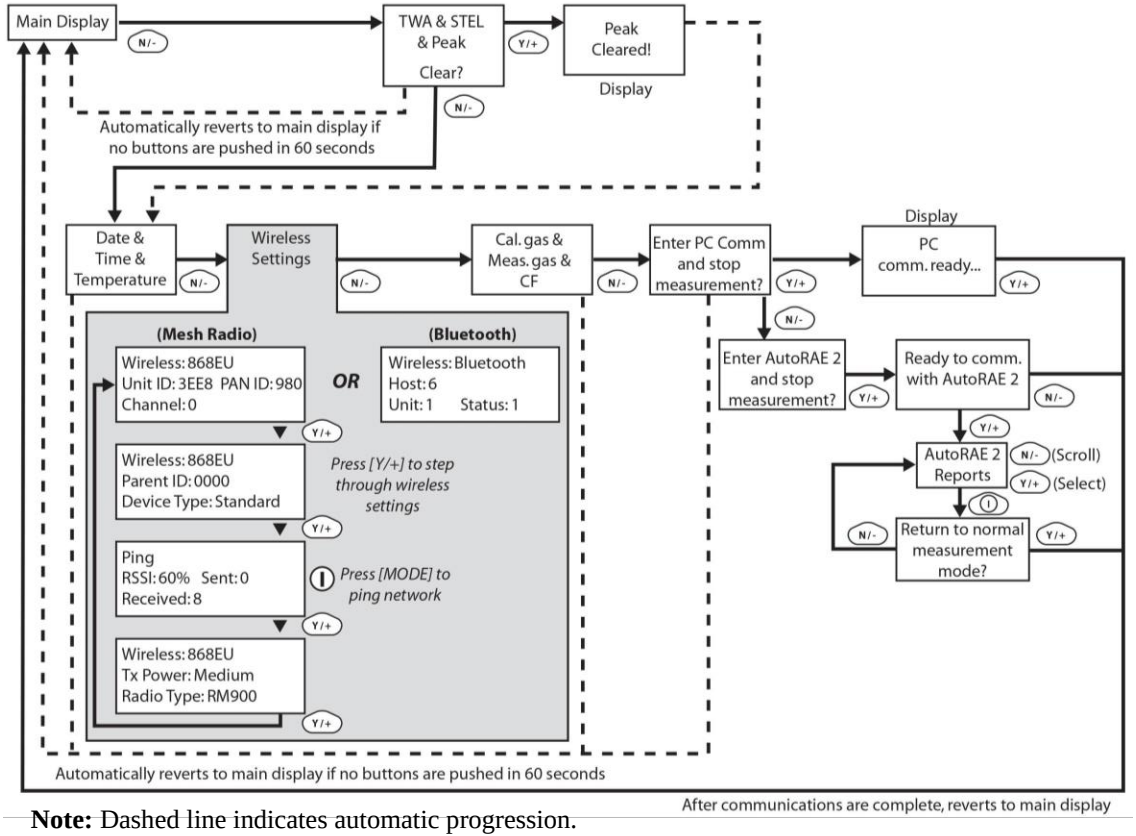

Note: Dashed line indicates automatic progression.

After the instrument is turned on, it runs through the start-up menu. Then the message "**Please apply zero gas…**" is displayed.

At this point, you can perform a zero air (fresh air) calibration. If the ambient air is clean, you can use that. Otherwise, use a cylinder of zero air. Refer to Zero Calibration on page 44 for a more detailed description of zero calibration.

Start zero calibration by pressing Start. You see the message "Zeroing…" followed by a 30-second countdown.

Note: You can press [MODE] to quit, bypassing the zero air calibration.

When zero calibration is complete, you see the message:

Zeroing is done!

Reading = 0.0 ppm

The instrument is now sampling and collecting data.

Note: At the Average & Peak, Date & Time & Temperature, Calibration Gas & Measurement Gas & Correction Factor, and PC Communications screens, the instrument automatically goes to the main display after 60 seconds if you do not push a key to make a selection.

Alarm Signals

During each measurement period, the gas concentration is compared with the programmed alarm limits (gas concentration alarm limit settings). If the concentration exceeds any of the preset limits, the loud buzzer and red flashing LED are activated immediately to warn you of the alarm condition.

In addition, the instrument alarms if one of the following conditions occurs: battery voltage falls below a preset voltage level, failure of the UV lamp, or pump stall.

Alarm Signal Summary

Message	Condition	Alarm Signal
HIGH	Gas exceeds "High Alarm" limit	3 beeps/flashes per second*
OVR	Gas exceeds measurement range	3 beeps/flashes per second*
MAX	Gas exceeds electronics' maximum range	3 beeps/flashes per second*
LOW	Gas exceeds "Low Alarm" limit	2 beeps/flashes per second*
TWA	Gas exceeds "TWA" limit	1 Beep/flash per second*
STEL	Gas exceeds "STEL" limit	1 Beep/flash per second*
Pump icon flashes	Pump failure	3 beeps/flashes per second
Lamp	PID lamp failure	3 beeps/flashes per second plus "Lamp" message on display
Battery icon flashes	Low battery	1 flash, 1 beep per minute plus battery icon flashes on display
CAL	Calibration failed, or needs calibration	1 beep/flash per second
NEG	Gas reading measures less than number stored in calibration	1 beep/flash per second

* Hygiene mode only. In Search mode, the number of beeps per second (1 to 7) depends upon the concentration of the sampled gas. Faster rates indicate higher concentrations.

Preset Alarm Limits & Calibration

The instrument is factory calibrated with standard calibration gas, and is programmed with default alarm limits.

Cal Gas (Isobutylene)	Cal Span	unit	Low	High	TWA	STEL
MiniRAE 3000	100	ppm	50	100	10	25

Testing The Alarm

You can test the alarm whenever the main (Reading) display is shown. Press [Y/+], and the audible and visible alarms are tested.

Integrated Sampling Pump

The instrument includes an integrated sampling pump. This diaphragm-type pump that provides a 450 to 550 cc per minute flow rate. Connecting a Teflon or metal tubing with 1/8" inside diameter to the gas inlet port of the instrument, this pump can pull in air samples from 100' (30 m) away horizontally or vertically.

Note: In Search Mode, the pump turns on when a sample measurement is started, and turns off when the sample is manually stopped.

If liquid or other objects are pulled into the inlet port filter, the instrument detects the obstruction and immediately shuts down the pump. The alarm is activated and a flashing pump icon is displayed.

You should acknowledge the pump shutoff condition by clearing the obstruction and pressing the [Y/+] key while in the main reading display to restart the pump.

Backlight

The LCD display is equipped with an LED backlight to assist in reading the display under poor lighting conditions.

Datalogging

During datalogging, the instrument displays a disk icon to indicate that datalogging is enabled. The instrument stores the measured gas concentration at the end of every sample period (when data logging is enabled). In addition, the following information is stored: user ID, site ID, serial number, last calibration date, and alarm limits. All data are retained (even after the unit is turned off) in non-volatile memory so that it can be down- loaded at a later time to a PC.

Datalogging event

When Datalogging is enabled, measurement readings are being saved. These data are stored in "groups" or "events." A new event is created and stored each time the instrument is turned on and is set to automatic datalogging, or a configuration parameter is changed, or datalogging is interrupted. The maximum time for one event is 24 hours or 28,800 points. If an event exceeds 24 hours, a new event is automatically created. Information, such as start time, user ID, site ID, gas name, serial number, last calibration date, and alarm limits are recorded.

Datalogging sample

After an event is recorded, the unit records a shorter form of the data. When transferred to a PC running ProRAE Studio, this data is arranged with a sample number, time, date, gas concentration, and other related information.

Auto/Manual/Snapshot Datalogging

The instrument has three datalog types:

Auto	Default mode. Collects datalog information when the instrument is sampling.
Manual	Datalogging occurs only when the instrument's datalogging is manually started (see page 63 for details).
Snapshot	Datalogs only during snapshot (single-event capture, initiated by pressing [MODE]) sampling. See page 65 for details.

Note: You can only choose one datalog type to be active at a time.

Accessories

The following accessories are included with the instrument:

- An AC Adapter (Battery Charger)
- Alkaline battery adapter
- External Filter
- Organic Vapor Zeroing kit

Hard-case kits also include these accessories:

- Calibration adapter
- Calibration regulator and Flow controller

Standard Kit & Accessories

AC Adapter (Battery Charger)

WARNING

To reduce the risk of ignition of hazardous atmospheres, recharge battery only in area known to be non-hazardous. Remove and replace battery only in area known to be non-hazardous.

Ne charger les batteries que dans emplacements designés non-dangereuses.

A battery charging circuit is built into the instrument cradle. It only needs a regular AC to 12 VDC adapter (wall-mount transformer, part number 500-0114-000) to charge the instrument.

To charge the battery inside the instrument:

1. Power off the instrument.
2. Connect the AC adapter to the DC jack on the instrument's cradle. If the instrument is off, it automatically turns on.
3. While charging, the display message shows "Charging." The Primary LED on the cradle flashes green when charging.
4. When the battery is fully charged, the LED changes to glowing green continuously, and the message "Fully charged" appears on the

display. If there is a charging error, the LED glows red continuously.

A completely discharged instrument can be charged to full capacity within 8 hours. Batteries drain slowly even if an instrument is off. Therefore, if the instrument has been in storage or has not been charged for several days or longer, check the charge before using it.

The factory-supplied battery is designed to last for 16 hours of normal operation (no alarm), for a new battery under the optimum circumstances. As the battery becomes older or is subject to adverse conditions (such as cold ambient temperature), its capacity will be significantly reduced.

Alkaline Battery Adapter

An alkaline battery adapter is supplied with each instrument. The adapter (part number 059-3052-000) accepts four AA alkaline batteries (use only Duracell MN1500) and provides approximately 12 hours of operation. The adapter is intended to be used in emergency situations when there is no time to charge the Li-ion battery pack.

To insert batteries into the adapter:

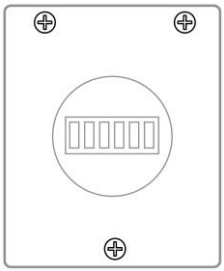

1. Remove the three Philips-head screws to open the compartment in the adapter.
2. Insert four fresh AA batteries as indicated by the polarity (+/-) markings.
3. Replace the cover. Replace the three screws.

To install the adapter in the instrument:

1. Remove the Li-ion battery pack from the instrument by sliding the tab and tilting out the battery.
2. Replace it with the alkaline battery adapter
3. Slide the tab back into place to secure the battery adapter.

IMPORTANT!

Alkaline batteries cannot be recharged. The instrument's internal circuit detects alkaline batteries and will not allow recharging. If you place the instrument in its cradle, the alkaline battery will not be recharged. The

internal charging circuit is designed to prevent damage to alkaline batteries and the charging circuit when alkaline batteries are installed inside the instrument. If you try to charge an alkaline batteries installed in the instrument, the instrument's display will say, "Alkaline Battery," indicating that it will not charge the alkaline batteries.

Note: When replacing alkaline batteries, dispose of old ones properly.

WARNING!

To reduce the risk of ignition of hazardous atmospheres, recharge the battery only in areas known to be non-hazardous. Remove and replace the battery only in areas known to be non-hazardous.

External Filter

The external filter is made of PTFE (Teflon®) membrane with a 0.45 micron pore size to prevent dust or other particles from being sucked into the sensor manifold, which would cause extensive damage to the instrument. It prolongs the operating life of the sensor. To install the external filter, simply connect it to the instrument's inlet tube.

Optional Accessories

Calibration Adapter

The calibration adapter for the instrument is a simple 6-inch Tygon tubing with a metal adapter on one end. During calibration, simply insert the metal adapter into the regular gas inlet probe of the instrument and the tubing to the gas regulator on the gas bottle.

Calibration Regulator

The Calibration Regulator is used in the calibration process. It regulates the gas flow rate from the Span gas cylinder into the gas inlet of the instrument during calibration process. The maximum flow rate allowed by the flow controller is about 0.5L/min (500 cc per min.). Alternatively, a demand-flow regulator or a Tedlar gas bag may be used to match the pump flow precisely.

Organic Vapor Zeroing Kit

The Organic Vapor Zeroing Kit is used for filtering organic air contaminants that may affect the zero calibration reading. To use the Organic Vapor Zeroing Kit, simply connect the filter to the inlet port of the instrument.

AutoRAE 2 Automatic Test & Calibration System

The AutoRAE 2 Automatic Test and Calibration System for RAE Systems portable gas monitors makes compliance with monitor test and calibration requirements as easy as pressing a button. Simply cradle the monitor and the system will take care of all calibration, testing, and recharging.

The AutoRAE 2 is a flexible, modular system that can be configured to meet your calibration requirements effectively and efficiently. An AutoRAE 2 system can be as simple as a single cradle deployed in standalone mode to calibrate one instrument at a time, or as powerful as a networked, controller-based system supporting ten monitors and five distinct calibration gas cylinders.

Standard Two-Point Calibration (Zero & Span, Optional Bump)

The following diagram shows the instrument's calibrations in Basic/Hygiene mode.

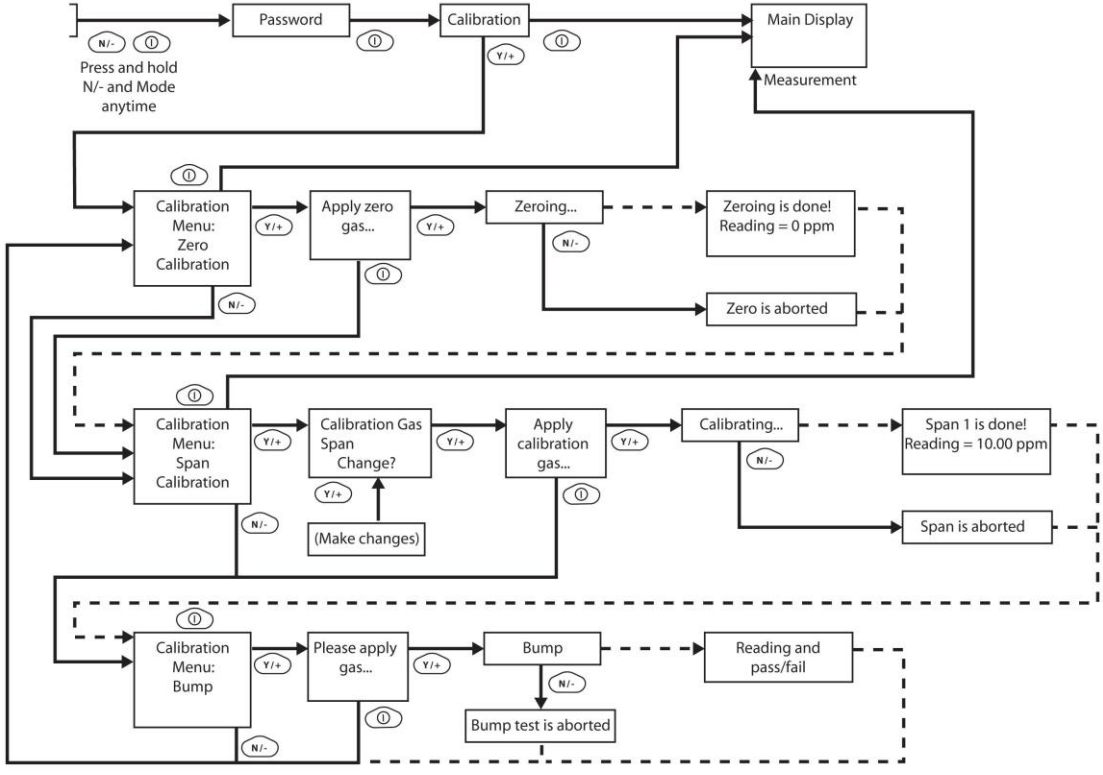

Note: Dashed line indicates automatic progression.

Entering Calibration

1. Press and hold [MODE] and [N/-] until you see the Password screen.

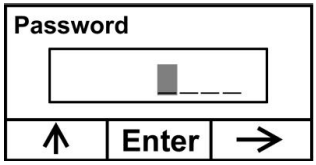

2. In Basic User Level, you do not need a password to perform calibrations. Instead of inputting a password, enter calibration by pressing [MODE].

   Note: If you inadvertently press [Y/+] and change any of the numbers, simply press [MODE] and you will be directed to the calibration menu.

The Calibration screen is now visible with Zero Calibration highlighted.

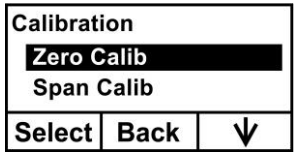

These are your options:

- Press [Y/+] to select the highlighted calibration (Zero Calib or Span Calib).
- Press [MODE] to exit calibration and return to the main display and resume measurement.
- Press [N/-] to toggle the highlighted calibration type.

Zero (Fresh Air) Calibration

This procedure determines the zero point of the sensor calibration curve. To perform a fresh air calibration, use the calibration adapter to connect the instrument to a "fresh" air source such as from a cylinder or Tedlar bag (optional accessory). The "fresh" air is clean, dry air without organic impurities and an oxygen value of 20.9%. If such an air cylinder is not available, any clean ambient air without detectable contaminants or a charcoal filter can be used.

At the Zero Calibration menu, you can proceed to perform a Zero calibration or bypass Zero calibration and perform a Span calibration. You may also go back to the initial Calibration menu if you want to exit calibration.

- Press [Y/+] to start calibration.
- Press [MODE] to quit and return to the main calibration display.

If you have pressed [Y/+] to enter Zero calibration, then you will see this message:

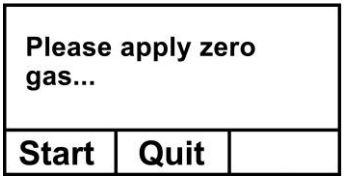

1. Turn on your Zero calibration gas.
2. Press [Y/+] to start calibration.

   Note: At this point, you may press [MODE] if you decide that you do not want to initiate calibration. This will take you directly to the Calibration menu, highlighted for Span calibration.

3. Zero calibration starts a 30-second countdown and displays this message:

   Zeroing...

During the zeroing process, the instrument performs the Zero calibration automatically and does not require any action on your part.

Note: To abort the zeroing process at any time and proceed to Span calibration, press [N/-] at any time while zeroing is being performed. You will see a confirmation message that says "Zero aborted!" and then the Span calibration menu appears.

When Zero calibration is complete, you see this message:

Zeroing is done!
Reading = 0.0 ppm

The instrument will then show the Calibration menu on its display, with Span Calib highlighted.

Span Calibration

This procedure determines the second point of the sensor calibration curve for the sensor. A cylinder of standard reference gas (span gas) fitted with a 500 cc/min. flow-limiting regulator or a flow-matching regulator is the simplest way to perform this procedure. Choose the 500 cc/min. regulator only if the flow rate matches or slightly exceeds the flow rate of the instrument pump. Alternatively, the span gas can first be filled into a Tedlar bag or delivered through a demand-flow regulator. Connect the calibration adapter to the inlet port of the instrument, and connect the tubing to the regulator or Tedlar bag.

Another alternative is to use a regulator with >500 cc/min flow but allow the excess flow to escape through a T or an open tube. In the latter method, the span gas flows out through an open tube slightly wider than the probe, and the probe is inserted into the calibration tube.

At the Span Calibration menu, you perform a Span calibration. You may also go back to the Zero calibration menu or to the initial Calibration menu if you want to exit calibration.

- Press [Y/+] to enter Span calibration.
- Press [N/-] to skip Span calibration and return to Zero calibration.
- Press [MODE] to exit Span calibration and return to the top calibration menu.

If you have pressed [Y/+] to enter Span calibration, then you will see the name of your Span gas (the default is isobutylene) and the span value in parts per million (ppm). You will also see this message that prompts you:

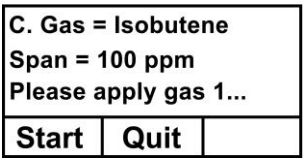

1. Turn on your span calibration gas.
2. Press [Y/+] to initiate calibration.

Note: You may press [MODE] if you decide that you do not want to initiate calibration. This will abort the span calibration and take you directly to the Calibration menu for Zero calibration.

3. Span calibration starts and displays this message:

   Calibrating...

During the Span calibration process, there is a 30-second countdown and the instrument performs the Span calibration automatically. It requires no actions on your part.

Note: If you want to abort the Span calibration process, press [N/-] at any time during the process. You will see a confirmation message that says "Span is aborted!" and then the Zero calibration menu appears. You can then proceed to perform a Zero calibration, perform a Span calibration, or exit to the topmost Calibration menu.

When Span calibration is complete, you see a message similar to this (the value is an example only):

Span 1 is done!
Reading = 100.0 ppm

The instrument then exits Span calibration and shows the Zero calibration menu on its display.

Note: The reading should be very close to the span gas value.

Exiting Two-Point Calibration In Basic User Level

When you are done performing calibrations, press [MODE], which corresponds with "Back" on the display. You will see the following message:

Updating settings…

The instrument updates its settings and then returns to the main display. It begins or resumes monitoring.

Three-Point Calibration

For enhanced accuracy, it is possible to perform a second Span calibration in addition to the Zero and Span calibrations outlined in the previous section. Your instrument first must be set to allow this third calibration. This requires using ProRAE Studio software and a PC, as well as a higher concentration of calibration gas.

Note: Once the third calibration is set, you do not need to use ProRAE Studio to allow future 3-point calibrations. Also, you can only disable 3-point calibration capability by using ProRAE Studio again.

Perform the Zero and Span calibrations. After the first Span calibration (Span 1) is completed, the display a second Span calibration (Span 2) can be performed. The process is identical to the first calibration. As in the Span 1 calibration, you may exit and return to the Zero calibration screen if you choose not to perform this calibration or to abort it.

Note: If a bump test is available, it appears after the last calibration in the menu. See "Two-Point Calibration," page 38, for details. Also, refer to page 53 for details on how to perform a bump test.

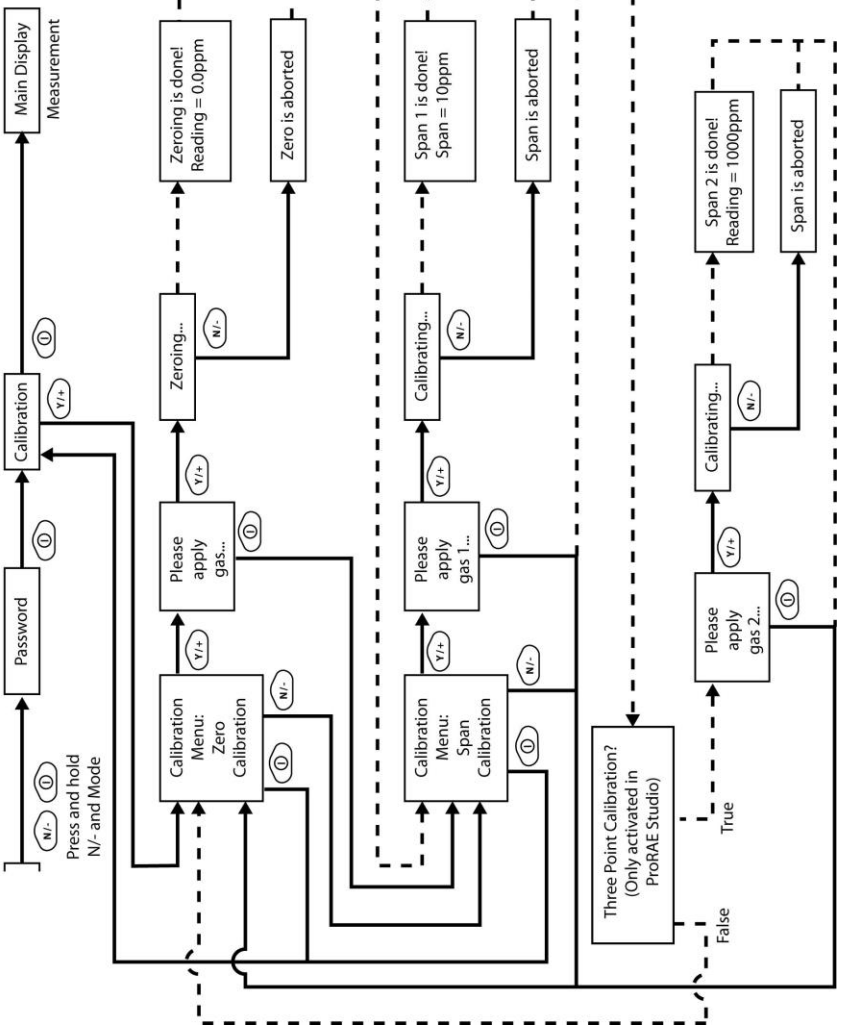

Note: Dashed line indicates automatic progression.

Span 2 Calibration

A cylinder of standard reference gas (span gas) fitted with a 500 cc/min. flow-limiting regulator or a flow-matching regulator is the simplest way to perform this procedure.

Note: This gas should be of a higher concentration than the gas used for Span 1 calibration.

Choose the 500 cc/min. regulator only if the flow rate matches or slightly exceeds the flow rate of the instrument pump. Alternatively, the span gas can first be filled into a Tedlar bag or delivered through a demand-flow regulator. Connect the calibration adapter to the inlet port of the instrument, and connect the tubing to the regulator or Tedlar bag.

Another alternative is to use a regulator with >500 cc/min flow but allow the excess flow to escape through a T or an open tube. In the latter method, the span gas flows out through an open tube slightly wider than the probe, and the probe is inserted into the calibration tube.

At the Span Calibration menu, you perform a Span calibration. You may also go back to the Zero calibration menu or to the initial Calibration menu if you want to exit calibration.

- Press [Y/+] to enter Span 2 calibration.
- Press [N/-] to skip Span calibration and return to Zero calibration.
- Press [MODE] to exit Span calibration and return to the top calibration menu.

If you have pressed [Y/+] to enter Span calibration, then you will see the name of your Span gas (the default is isobutylene) and the span value in parts per million (ppm). You will also see this message that prompts you:

Please apply gas...

4. Turn on your span calibration gas.
5. Press [Y/+] to initiate calibration.

Note: You may press [MODE] if you decide that you do not want to initiate calibration. This will take you directly to the Calibration menu for Zero calibration.

6. Span calibration starts a 30-second countdown and displays this message:

   Calibrating...

During the Span calibration process, the instrument performs the Span calibration automatically and does not require any action on your part.

Note: If you want to abort the Span calibration process, press [N/-] at any time during the process. You will see a confirmation message that says "Span is aborted!" and then the Zero calibration menu will appear. You can then proceed to perform a Zero calibration, perform a Span calibration, or exit to the topmost Calibration menu.

When Span calibration is complete, you will see a message similar to this (the value shown here is for example only):

Span 2 is done!
Reading = 1000 ppm

The instrument then exits Span calibration and shows the Zero calibration menu on its display.

Note: The reading should be very close to the span gas value.

Exiting Three-Point Calibration

When you are done performing calibrations, press [MODE], which corresponds with "Back" on the display. You will see the following message:

Updating settings…

The instrument updates its settings and then returns to the main display. It begins or resumes monitoring.

Bump Test

RAE Systems recommends that a bump test be conducted prior to each day's use. The purpose of a bump test is to ensure that the instrument's sensors respond to gas and all the alarms are enabled and functional.

- The MiniRAE 3000 must be calibrated if it does not pass a bump test when a new sensor is installed, after sensor maintenance has been performed, or at least once every 180 days, depending on use and sensor exposure to poisons and contaminants.
- Calibration and bump test intervals and procedures may vary due to national legislation and company policy.

To perform a bump test (functional challenge), follow these steps:

1. Select "Bump."
2. Install the calibration adapter and connect it to a source of calibration gas.
3. Verify that the displayed calibration value meets the concentration specified on the gas cylinder.
4. Start the flow of calibration gas.
5. Press [Y/+] to start the bump test.
6. You can abort the calibration at any time during the countdown by pressing [N/-].

7. If the calibration is not aborted, the display shows reading and then tells you whether the bump test passed or failed. If the bump test failed, then it automatically advances to the Calibration screen.

Important!

Anytime a bump test fails, you should perform a full calibration of the instrument.

Programming Mode

Programming Mode can be entered from either Hygiene Mode or Search Mode. If the current user mode is Basic, you must provide a 4-digit password to enter.

Entering Programming Mode

1. Press and hold [MODE] and [N/-] until you see the Password screen.

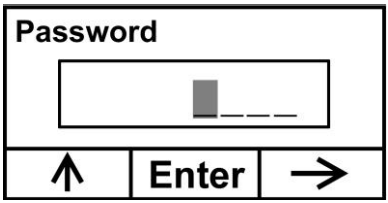

2. Input the 4-digit password:

- Increase the number from 0 through 9 by pressing [Y/+].
- Step from digit to digit using [N/-].
- Press [MODE] when you are done.

If you make a mistake, you can cycle through the digits by pressing [N/-] and then using [Y/+] to change the number in each position.

Note: The default password is 0000.

When you have successfully entered Programming Mode, you see this screen:

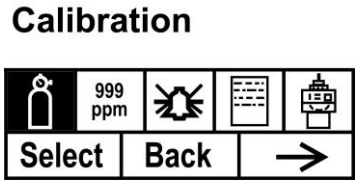

Note: The password can only be changed by connecting the instrument to a PC running ProRAE Studio software. Follow the instructions in ProRAE Studio to change it.

The Calibration label is shown and its icon is highlighted, but you can press [N/-] to step from one programming menu to the next, with the name of the menu shown at the top of the display and the corresponding icon highlighted. As you repeatedly press [N/-], the selection moves from left to right, and you see these screens:

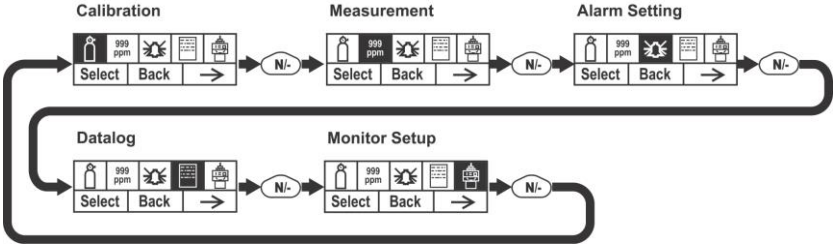

Note: When you reach Monitor Setup and press [N/-], the menu cycles back to Calibration.

Programming Mode Menus

The Programming Mode allows anyone with the password to change the instrument's settings, calibrate the instrument, modify the sensor configuration, enter user information, etc. Programming Mode has five menus. Each menu includes several sub-menus to perform additional programming functions.

This table shows the menus and sub-menus:

	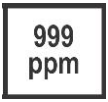			
Calibration	**Measurement**	**Alarm Setting**	**Datalog**	**Monitor Setup**
Zero Calibration	Meas. Gas	High Alarm	Clear Datalog	Radio Power
Span Calibration	Meas. Unit	Low Alarm	Interval	Op Mode
Bump		STEL Alarm	Data Selection	Site ID
		TWA Alarm	Datalog Type	User ID
		Alarm Mode		User Mode
		Buzzer & Light		Date
				Time
				Pump Duty Cycle
				Pump Speed
				Temperature Unit
				Language
				Real Time Protocol
				Power On Zero
				Unit ID
				LCD Contrast
				Lamp ID
				PAN ID
				Mesh Channel
				Mesh Interval

Once you enter Programming Mode, the LCD displays the first menu, Calibration. Each subsequent menu is accessed by pressing [N/-] repeatedly until the desired menu is displayed. To enter a sub-menu of a menu, press [Y/+].

Exiting Programming Mode

To exit Programming Mode and return to normal operation, press [MODE] once at any of the programming menu displays. You will see "Updating Settings…" as changes are registered and the mode changes.

Navigating Programming Mode Menus

Navigating through the Programming Mode menus is easy and consistent, using a single interface format of "Select," "Back" and "Next" at the top level. The three control buttons correspond to these choices as shown:

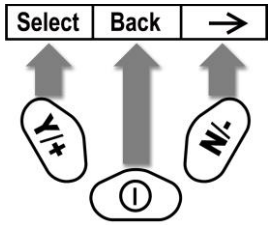

Note: Pressing [MODE] in the Programming Mode's top level causes the instrument to exit Programming Mode and return to monitoring.

The three keys perform the following functions in Programming Mode:

Key	Function in Programming Mode
[MODE]:	Exit menu when pressed momentarily or exit data entry mode
[Y/+]:	Increase alphanumerical value for data entry or confirm (yes) for a question
[N/-]:	Provides a "no" response to a question

Calibration

Two types of calibration are available: Zero (fresh air) and Span.

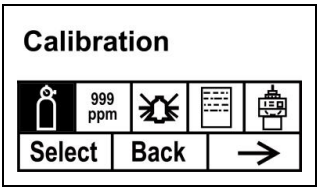

Select Zero or Span Calibration by pressing [N/+]. Once your choice is highlighted, press [Y/+].

Zero Calibration

The procedure for performing a zero calibration is covered on page 41.

Span Calibration

The procedure for performing a basic span calibration is covered on page 41.

Bump

The procedure for performing a bump calibration is covered on page 53.

A bump test can be performed either manually or using the AutoRAE 2 Automatic Test and Calibration System. When a bump test is done manually, the instrument makes a pass/fail decision based on sensor performance, but the user still has the responsibility to make sure all the alarms are enabled and functional.

Note: Bump testing and calibration can be performed using an AutoRAE 2 Automatic Test & Calibration System. An AutoRAE 2 bump test takes care of both the sensor and alarm tests. Consult the AutoRAE 2 User's guide for details.

IMPORTANT!

If the instrument does not pass a bump test, perform a full calibration. If calibration also fails, the PID sensor or lamp may require cleaning or replacement. If the instrument repeatedly fails to calibrate, turn it off and refer it for servicing.

Measurement

The sub-menus for Measurement are Measurement Gas and Measurement Unit.

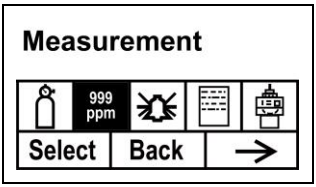

Meas. Gas

Measurement gases are organized in four lists:

- My List is a customized list of gases that you create. It contains a maximum of 10 gases and can only be built in ProRAE Studio on a PC and transferred to the instrument. **Note:** The first gas in the list is always isobutylene (it cannot be removed from the list).
- Last Ten is a list of the last ten gases used by your instrument. The list is built automatically and is only updated if the gas selected from Custom Gases or Library is not already in the Last Ten. This ensures that there is no repetition.
- Gas Library is a library that consists of all the gases found in RAE Systems' Technical Note TN-106 (available online at www.raesystems.com).
- Custom Gases are gases with user-modified parameters. Using ProRAE Studio, all parameters defining a gas can be modified,

including the name, span value(s), correction factor, and default alarm limits.

1. Scroll through each list by pressing [N/-].
2. Press [Y/+] to select one (My List, Last Ten, Gas Library, or Custom Gases).
3. Once you are in one of the categories, press [N/-] to scroll through its list of options and [Y/+] to select one. (If you press [MODE], you exit to the next submenu.)
4. Press [Y/+] to save your choice or [N/-] to undo your selection.

Leave the sub-menu and return to the Programming Mode menus by pressing [MODE].

Meas. Unit

Standard available measurement units include:

Abbreviation	Unit	MiniRAE 3000
ppm	parts per million	Yes
ppb	parts per billion	
mg/m3	milligrams per cubic meter	Yes
ug/m3	micrograms per cubic meter	

- Scroll through the list by pressing [N/-].
- Select by pressing [Y/+].
- Save your selection by pressing [Y/+] or undo your selection by pressing [N/-].

Leave the sub-menu and return to the Programming Mode menus by pressing [MODE].

Alarm Setting

During each measurement period, the gas concentration is compared with the programmed alarm limits (gas concentration alarm limit settings: Low, High, TWA and STEL). If the concentration exceeds any of the preset limits, the loud buzzer and red flashing LED are activated immediately to warn of the alarm condition.

An alarm signal summary is shown on page 33.

In this menu, you can change the High and Low alarm limits, the STEL limit, and the TWA. Press [Y/+] to to enter the Alarm Setting menu. **Note:** All settings are shown in ppb (parts per billion), or µg/m^3 (micrograms per cubic meter), depending on your setting.

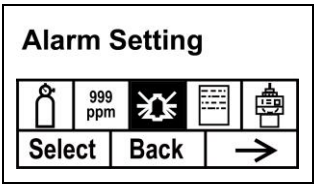

1. Scroll through the Alarm Limit sub-menu using the [N/-] key until the display shows the desired limit to be changed (High Alarm, Low Alarm, STEL Alarm, and TWA Alarm)
2. Press [Y/+] to select one of the alarm types. The display shows a flashing cursor on the left-most digit of the previously stored alarm limit.
3. Press [Y/+] to increase each digit's value.
4. Press [N/-] to advance to the next digit.
5. Again, use [Y/+] to increase the number.

Repeat this process until all numbers are entered.

Press [MODE] when you are done.

- Press [Y/+] to save the changes.
- Press [N/-] to undo the changes and revert to the previous settings.

When all alarm types have been changed or bypassed, press [MODE] to exit to the Programming Menu.

High Alarm

You can change the High Alarm limit value. The value is typically set by the instrument to match the value for the current calibration gas. It is expressed in parts per billion (ppb). **Note:** The default value depends on the measurement gas.

To change the High Alarm value:

1. Press [Y/+] to increase each digit's value.
2. Press [N/-] to advance to the next digit.
3. Again, use [Y/+] to increase the number.

Repeat this process until all numbers are entered.
When you have completed your selections, press [MODE]. You will see two choices: Save and Undo. You have the opportunity to register the new settings or to change your mind and revert to your previous settings.

Press [Y/+] to save the changes.
Press [N/-] to undo the changes and revert to the previous settings.

Low Alarm

You can change the Low Alarm limit value. The value is typically set by the instrument to match the value for the current calibration gas. It is expressed in parts per billion (ppb). **Note:** The default value depends on the measurement gas.

To change the Low Alarm value:

1. Press [Y/+] to increase each digit's value.
2. Press [N/-] to advance to the next digit.
3. Again, use [Y/+] to increase the number.

Repeat this process until all numbers are entered.

When you have completed your selections, press [MODE]. You will see two choices: Save and Undo. You have the opportunity to register the new settings or to change your mind and revert to your previous settings.

- Press [Y/+] to save the changes.
- Press [N/-] to undo the changes and revert to the previous settings.

STEL Alarm

You can change the STEL Alarm limit value. The value is typically set by the instrument to match the value for the calibration gas. It is expressed in parts per billion (ppb). **Note:** The default value depends on the measurement gas.

To change the STEL Alarm value:

1. Press [Y/+] to increase each digit's value.
2. Press [N/-] to advance to the next digit.
3. Again, use [Y/+] to increase the number.

Repeat this process until all numbers are entered.

When you have completed your selections, press [MODE]. You will see two choices: Save and Undo. You have the opportunity to register the new settings or to change your mind and revert to your previous settings.

- Press [Y/+] to save the changes.
- Press [N/-] to undo the changes and revert to the previous settings.

TWA Alarm

You can change the TWA (time-weighted average) Alarm limit value. The value is typically set by the instrument to match the value for the calibration gas. It is expressed in parts per billion (ppb). **Note:** The default value depends on the measurement gas.

To change the TWA Alarm value:

1. Press [Y/+] to increase each digit's value.
2. Press [N/-] to advance to the next digit.
3. Again, use [Y/+] to increase the number.

Repeat this process until all numbers are entered.

When you have completed your selections, press [MODE]. You will see two choices:

- Save
- Undo

You have the opportunity to register the new settings or to change your mind and revert to your previous settings.

- Press [Y/+] to save the changes.
- Press [N/-] to undo the changes and revert to the previous settings.

Alarm Mode

There are two selectable alarm modes:

Auto Reset — When the alarm condition is no longer present, the alarm stops and automatically resets itself.

Latch — When the alarm is triggered, you can manually stop the alarm.
The latched setting only controls alarms for High Alarm, Low Alarm, STEL Alarm, and TWA alarm.

Note: To clear an alarm when the instrument is set to "Latched," press [Y/+] when the main (Reading) display is shown.

1. Press **[N/-]** to step from one alarm type to the other.
2. Press **[Y/+]** to select an alarm type.

When you have completed your selections, press [MODE].

You will see two choices: Save and Undo. You have the opportunity to register the new settings or to change your mind and revert to your previous settings.

- Press [Y/+] to save the changes.
- Press [N/-] to undo the changes and revert to the previous settings.

Buzzer & Light

The buzzer and light alarms can be programmed to be on or off individually or in combination. Your choices are:

- Both on
- Light only
- Buzzer only
- Both off

1. Press [N/-] to step from one option to the next.
2. Press [Y/+] to make your selection (the dark circle in the "radio button" indicates your selection).
3. When you have completed your selections, press [MODE].

   You will see two choices: Save and Undo. You have the opportunity to register the new settings or to change your mind and revert to your previous settings.

   - Press [Y/+] to save the changes.
   - Press [N/-] to undo the changes and revert to the previous settings.

Datalog

The instrument calculates and stores the concentration and ID of each sample taken. In the datalog sub-menu, a user can perform the tasks and functions shown below.

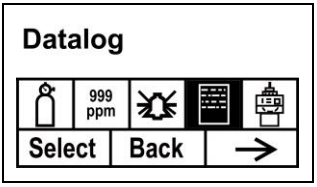

1. Scroll through the Datalog sub-menu using the [N/-] key until the display shows the desired parameter to be changed:

   Clear Datalog
   Interval
   Data Selection
   Datalog Type

2. Press [Y/+] to make your selection. Exit by pressing [MODE] for Back.

Clear Datalog

This erases all the data stored in the datalog.

Note: Once the datalog is cleared, the data cannot be recovered.

Press [Y/+] to clear the datalog. The display asks, "Are you sure?"

- Press [Y/+] if you want to clear the datalog. When it has been cleared, the display shows "Datalog Cleared!"
- Press [N/-] if you do not want to clear the datalog.

The display changes, and you are taken to the next sub-menu, Interval.

Interval

Intervals are shown in seconds. The default value is 60 seconds. The maximum interval is 3600 seconds.

1. Press [Y/+] to increase each digit's value.
2. Press [N/-] to advance to the next digit.
3. Again, use [Y/+] to increase the number.

Repeat this process until all numbers are entered.

When you have completed your selections, press [MODE].

You will see two choices: Save and Undo. You have the opportunity to register the new settings or to change your mind and revert to your previous settings.

- Press [Y/+] to save the changes.
- Press [N/-] to undo the changes and revert to the previous settings.

Data Selection

Data Selection allows you to select which types of data are stored and made available when you offload your datalog to a computer via ProRAE Studio software.

You can choose any or all of three types of data (you must choose at least one):

- Average
- Maximum
- Minimum

1. Press [N/-] to step from one option to the next. The highlighter indicates your choice.
2. Press [Y/+] to toggle your selection on or off (the check box indicates "on" with an "X").
3. When you have completed your selections, press [MODE].

You will see two choices: Save and Undo. You have the opportunity to register the new settings or to change your mind and revert to your previous settings.

- Press [Y/+] to save the changes.
- Press [N/-] to undo the changes and revert to the previous settings.

Datalog Type

The instrument has three datalog types:

Auto	Default mode. Collects datalog information when the instrument is sampling.
Manual	Datalogging occurs only when the instrument's datalogging is manually started (see below for details).
Snapshot	Datalogs only during single-event capture sampling.

Note: You can only choose one datalog type to be active at a time.

1. Press [N/-] to step from one option to the next.
2. Press [Y/+] to make your selection (the dark circle in the "radio button" indicates "on").
3. When you have completed your selection, press [MODE].

You will see two choices: Save and Undo. You have the opportunity to register the new settings or to change your mind and revert to your previous settings.

- Press [Y/+] to save the changes.

Press [N/-] to undo the changes and revert to the previous settings.

Manual Datalog

When the instrument is set to Manual Datalog, you turn datalogging on and off by stepping through the displays from the Main Display, and then pressing the keys to select datalog on/off functions.

- When you reach the screen that says "Start Datalog?" press [Y/+] to start it. You see "Datalog Started," confirming that datalogging is now on.

When you reach the screen that says "Stop Datalog?" press [Y/+] to stop it. You see "Datalog Stopped," confirming that datalogging is now off.

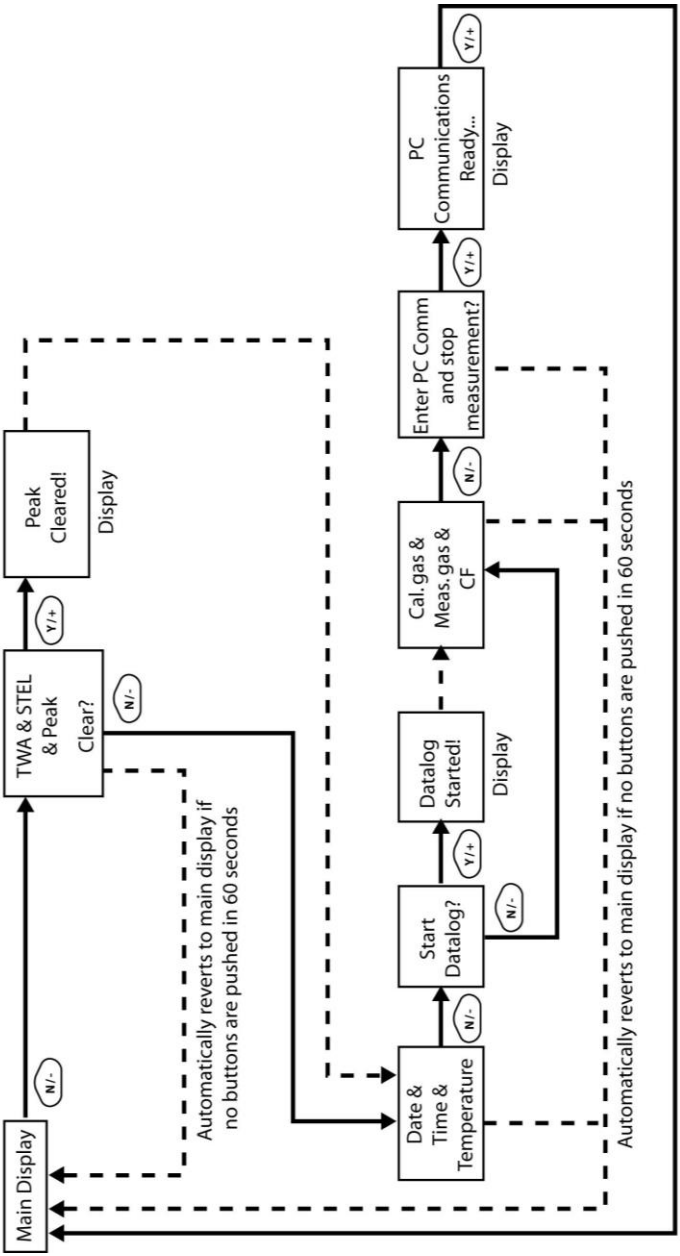

Note: Dashed line indicates automatic progression.

Snapshot Datalog

When the instrument is in Snapshot datalogging mode, it captures a single "snapshot" of the data at the moment of your choosing. Whenever the instrument is on and it is set to Snapshot, all you have to do is press [MODE] each time you want to capture a snapshot of the data at that instant.

When you send the data to a computer using ProRAE Studio, the data snapshots are uniquely identified by time and other parameters.

Monitor Setup

Many settings can be accessed in this menu, including setting the date and time and adjusting the pump's on/off duty cycle.

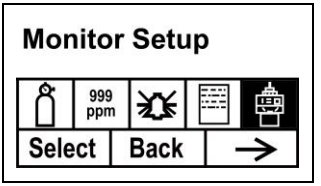

Radio Power

The radio connection can be turned on or off.

1. Press [N/-] to step from one option to the next (on or off).
2. Press [Y/+] to make your selection (the dark circle in the "radio button" indicates that the option is selected).
3. When you have completed your selection, press [MODE].

- Press [Y/+] to accept the new radio setting (on or off).
- Press [N/-] to discard the change and move to the next sub-menu.

Op Mode

Under Monitor Setup is "Op Mode."

Press [Y/+] to select.

You see two options (one is highlighted):

Hygiene
Search

The current mode is indicated by a dark circle within the circle in front of either Hygiene or Search.

1. Select Hygiene or Search by pressing [N/-]. The highlighting changes from one to the other each time you press [N/-].
2. Press [Y/+] to select that mode for the instrument.
3. Press [MODE] when you want to register your selection to place the instrument in the selected mode.
4. Press [Y/+] to commit the change and exit to the Monitor Setup screen, or press [N/-] to Undo (exit to the Monitor Setup screen without changing the Mode).

Site ID

Enter an 8-digit alphanumeric/character Site ID in the programming mode. This Site ID is included in the datalog report.

1. Press [Y/+] and the display shows the current site ID. Example: "RAE00001." Note that the left-most digit flashes to indicate it is the selected one.
2. Press [Y/+] to step through all 26 letters (A to Z) and 10 numerals (0 to 9).
   Note: The last four digits must be numerals.
3. Press [N/-] to advance to the next digit. The next digit to the right flashes.

Repeat this process until all eight digits of the new site ID are entered.

Press [MODE] to exit.

If there is any change to the existing site ID, the display shows "Save?" Press [Y/+] to accept the new site ID. Press [N/-] to discard the change and move to the next sub-menu.

User ID

Enter an 8-digit alphanumeric User ID in the programming mode. This User ID is included in the datalog report.

1. Press [Y/+] and the display shows the current User ID. Example: "RAE00001." Note that the left-most digit flashes to indicate it is the selected one.
2. Press [Y/+] to step through all 26 letters (A to Z) and 10 numerals (0 to 9).
3. Press [N/-] to advance to the next digit. The next digit to the right flashes.

   Repeat this process until all eight digits of the new User ID are entered.

Press [MODE] to exit.

If there is any change to the existing User ID, the display shows "Save" Press [Y/+] to accept the new site ID. Press [N/-] to discard (undo) the change and move to the next sub-menu.

User Mode

The instrument has two user modes:

Basic Basic users can only see and use a basic set of functions.
Advanced Advanced users can see all screens and perform all available functions.

Note: The default value for User Mode is Basic.

To change the User Mode:

1. Press [N/-] to step from one option to the next. The highlighting changes each time you press [N/-].
2. Press [Y/+] to make your selection (the dark circle in the "radio button" indicates "on").
3. When you have completed your selection, press [MODE].
4. Press [Y/+] to accept the new User Mode. Press [N/-] to discard the change and move to the next sub-menu.

Date

The Date is expressed as Month/Day/Year, with two digits for each.

1. Press [Y/+] and the display shows the current date. Note that the left-most digit flashes to indicate it is selected.
2. Press [Y/+] to step through all 10 numerals (0 to 9).
3. Press [N/-] to advance to the next digit. The next digit to the right flashes.

   Repeat this process until all six digits of the new date are entered.

Press [MODE] to exit.

- Press [Y/+] to save the new date.
- Press [N/-] to undo the change and move to the next sub-menu.

Time

The Time is expressed as Hours/Minutes/Seconds, with two digits for each. The time is in 24-hour (military) format.

1. Press [Y/+] and the display shows the current time. Note that the left-most digit flashes to indicate it is selected.
2. Press [Y/+] to step through all 10 numerals (0 to 9).
3. Press [N/-] to advance to the next digit. The next digit to the right flashes.

   Repeat this process until all six digits of the new time are entered.

Press [MODE] to exit.

- Press [Y/+] to save the new date.
- Press [N/-] to undo the change and move to the next sub-menu.

Pump Duty Cycle

The pump's duty cycle is the ratio of its on time to off time. The duty cycle ranges from 50% to 100% (always on), and the period is 10 seconds. Therefore, a duty cycle of 60% means that the pump is on for 6 seconds and off for four seconds. Duty cycling is employed by the instrument to clean the PID. A lower duty cycle has a greater effect on keeping the PID clean than a higher duty cycle.

Important! Pump duty cycling is interrupted when the instrument senses a gas. The pump's duty cycle is disabled when the measurement is greater than the 2ppm threshold and is re-enabled when the reading falls below 90% of the threshold (1.8 ppm).

1. Press [Y/+] to increase the value.
2. When you have completed your selection, press [MODE].
   - Press [Y/+] to save the new duty cycle value.
   - Press [N/-] to undo the change and move to the next sub-menu.

Pump Speed

The pump can operate at two speeds, high and low. Running at low speed is quieter and conserves a small amount of power. There is almost no difference in sampling accuracy.

1. Press [N/-] to step from one option to the next.
2. Press [Y/+] to make your selection (the dark circle in the "radio button" indicates "on").
3. When you have completed your selection, press [MODE].
   - Press [Y/+] to save the new temperature unit.
   - Press [N/-] to undo the change and move to the next sub-menu.

Temperature Unit

The temperature display can be switched between Fahrenheit and Celsius units.

1. Press [N/-] to step from one option to the next.
2. Press [Y/+] to make your selection (the dark circle in the "radio button" indicates "on").
3. When you have completed your selection, press [MODE].
   - Press [Y/+] to save the new temperature unit.
   - Press [N/-] to undo the change and move to the next sub-menu.

Language

English is the default language, but other languages can be selected for the instrument.

1. Press [N/-] to step from one option to the next.
2. Press [Y/+] to make your selection (the dark circle in the "radio button" indicates "on").
3. When you have completed your selection, press [MODE].
   - Press [Y/+] to save your new language choice.
   - Press [N/-] to undo it and return to the previous language selection.

Real Time Protocol

Real Time Protocol is the setting for data transmission.

The choices are:

P2M (cable)	Point to multipoint. Data is transferred from the instrument to multiple locations using a wired connection. Default data rate: 19200 bps.
P2P (cable)	Point to point. Data is transferred only between the instrument and one other location, such as a computer. Default data rate: 9600 bps.
P2M (wireless)	Point to multipoint, wireless. Data is transferred wirelessly and can be received by multiple receivers.

1. Press [N/-] to step from one option to the next.
2. Press [Y/+] to make your selection (the dark circle in the "radio button" indicates "on").
3. When you have completed your selection, press [MODE].
   - Press [Y/+] to save the new real-time communications protocol.
   - Press [N/-] to undo the change and move to the next sub-menu.

Power On Zero

When Power On Zero is on, the instrument performs a zero calibration when it is turned on.

1. Press [N/-] to step from one option to the next.
2. Press [Y/+] to make your selection (the dark circle in the "radio button" indicates your selection).
3. When you have completed your selection, press [MODE].
   - Press [Y/+] to save the change.
   - Press [N/-] to discard the change and move to the next sub-menu.

Unit ID

This three-digit number keeps data separated by instrument when more than one instrument is used in a network. If multiple sensing units are attempting to communicate with the same Host, then the units must all have a different Unit ID.

1. Press [Y/+] to step through all 10 numerals (0 to 9). If you pass the numeral you want, keep pressing [Y/+]. After it counts up to 9, it starts counting up from 0 again.
2. Press [N/-] to advance to the next digit. The next digit to the right flashes.

Repeat this process until all three digits of the Unit ID are entered.

3. Press [MODE] when you are done.
   - Press [Y/+] to save the change.
   - Press [N/-] to discard the change and move to the next sub-menu.

LCD Contrast

The display's contrast can be increased or decreased from its default setting. You may not need to ever change the default setting, but sometimes you can optimize the display to suit extreme temperature and ambient brightness/darkness conditions.

- The minimum value is 20.
- The maximum value is 60.

1. Press [Y/+] to increase the value or [N/-] to decrease the value.
2. Press [MODE] to save your selection.
   - Press [Y/+] to save your new contrast value.
   - Press [N/-] to undo it and return to the previous value.

Lamp ID

The instrument must be set to the correct lamp value in order to function correctly. Always match the value that was installed in your instrument from the factory or the value of the PID lamp you are replacing.

1. Press [N/-] to step from one option to the next.
2. Press [Y/+] to make your selection (the dark circle in the "radio button" indicates "on").
3. When you have completed your selection, press [MODE].

PAN ID

The MiniRAE 3000 and any other devices that you want to interconnect wirelessly must have the same PAN ID. You can set the PAN ID in the instrument or through ProRAE Studio II.

1. Press [N/-] to advance through the digits from left to right.
2. Press [Y/+] to] to advance through the numbers (1, 2, 3, etc.).
3. Press [MODE] to register your choice when you are done.

Mesh Channel

Note: For mesh radio modems operating at 868MHz, only channel 0 is available. For other frequencies, channels 1 through 10 are allowed.

1. Press [Y/+] to increase the number and [N/-] to advance to the next digit.
2. After moving to the last digit and making changes, press [MODE].
    - Press [Y/+] to save the change.
    - Press [N/-] to undo the change.

Mesh Interval

Set the time interval at which the instrument's mesh radio sends out a signal. This can range from once every 10 seconds to once every four minutes (240 seconds). The transmission frequency is user-adjustable, but a rate of at least once every 30 seconds is recommended. **Note:** Shorter intervals reduce battery life.

1. Press [N/-] to step from one option to the next.
2. Press [Y/+] to make a selection.
3. When you are done, press [MODE].

Hygiene Mode

The instrument usually operates in Hygiene Mode, which provides basic functionality. However, it is possible to operate it in a second mode called Search Mode. Here are the primary differences:

Hygiene Mode: Automatic measurements, continuously running and datalogging, and calculates additional exposure values.

Search Mode: Manual start/stop of measurements and display of certain exposure values.

Basic User Level & Hygiene Mode

The default setting is navigated in the following way:

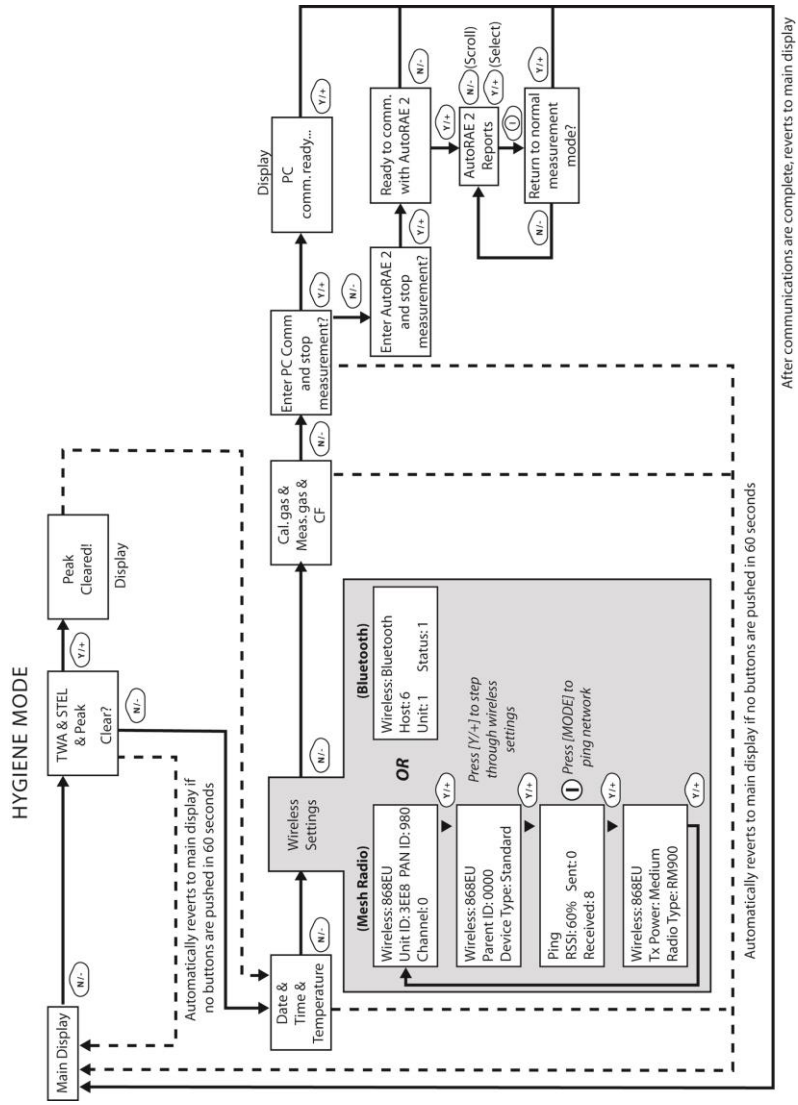

Note: Dashed line indicates automatic progression.

Pressing [N/-] steps you from screen to screen. Options include clearing the Peak value and turning on the instrument's PC Communications for data transfer to a PC.

Entering Search Mode From Hygiene Mode

In order to change the instrument's operational mode from Hygiene Mode to Search Mode, you must enter the password-protected Programming Mode:

1. Hold [MODE] and [N/-] until you see the password screen.
2. Use [Y/+] to increment to the number you want for the first digit. (If you pass by the desired number, press [Y/+] until it cycles through to 0 again. Then press [Y/+] until you reach the desired number.)
3. Press [N/-] to advance to the next digit.
4. Again press [Y/+] to increment the number.
5. Press [N/-] to advance to the next digit.

Continue the process until all four numbers of the password have been input. Then press [MODE] to proceed.

The screen changes to icons with the label "Calibration."

1. Press [N/-] to advance to "Monitor Setup."
2. Press [Y/+] to select Monitor Setup.

Under Monitor Setup, you will see "Op Mode."

Press [Y/+] to select.

You will see:

Hygiene
Search

The current mode is indicated by a dark circle within the circle in front of either Hygiene or Search.

1. Select Hygiene or Search by pressing [N/-].
2. Press [Y/+] to place the instrument into the selected mode.

3. Press [MODE] when you want to register your selection to place the instrument in the selected mode.
4. Press [Y/+] to commit the change and exit to the Monitor Setup screen, or press [N/-] to Undo (exit to the Monitor Setup screen without changing the Mode).

Advanced User Level (Hygiene Mode Or Search Mode)

The User Mode called Advanced User Level allows a greater number of parameters to be changed than Basic User Level. It can be used with either of the Operation Modes, Hygiene Mode or Search Mode.

Advanced User Level & Hygiene Mode

With the instrument in Operation Mode: Hygiene Mode, enter User Mode: Advanced User Level (refer to the section called Monitor Mode for instructions).

Once you are in Advanced User Level and Hygiene Mode together, you can change the calibration reference and measurement gas, in addition to performing normal monitoring functions.

Pressing [N/-] progresses through the screens, while pressing [Y/+] selects options. Pressing [MODE] makes menu choices when it is shown for "Done" or "Back." Pressing and holding [Mode] whenever the circle with a vertical line in the middle is shown activates the countdown to shutoff.

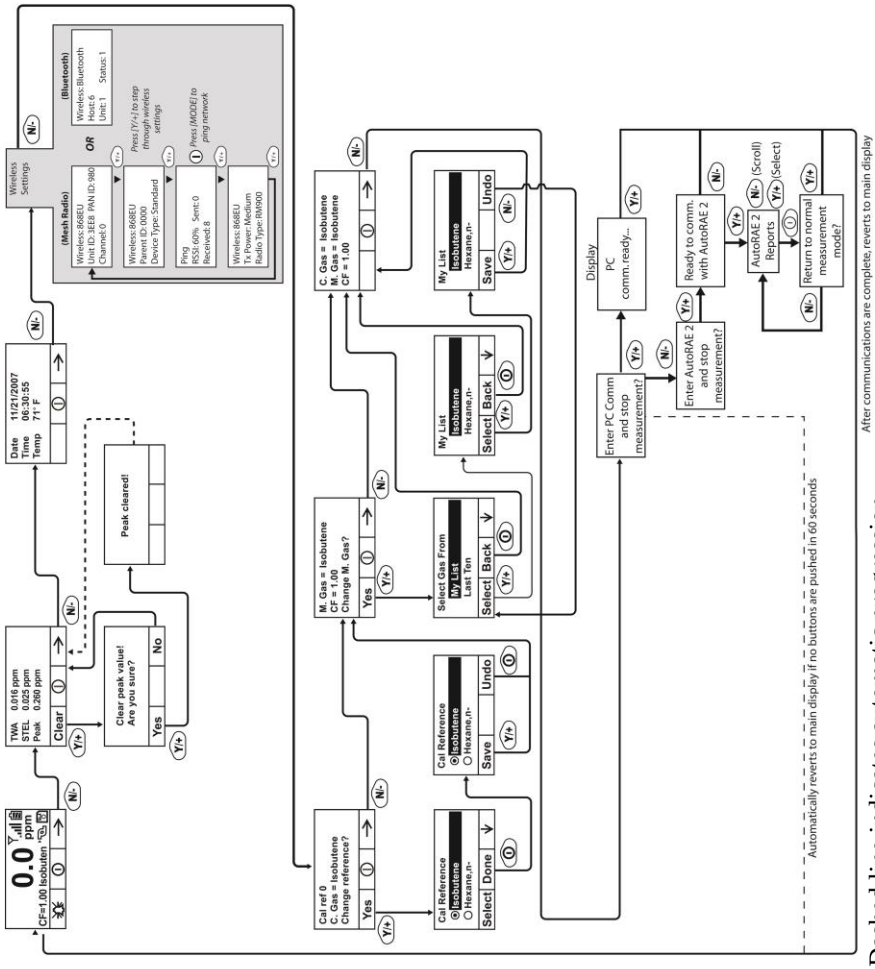

Note: Dashed line indicates automatic progression.

Basic User Level & Search Mode

With the instrument in Operation Mode: Search Mode, enter User Mode and select Basic User Level (refer to the section called User Mode for instructions).

When the instrument is in Search Mode, it only samples when you activate sampling. When you see the display that says, "Ready…Start sampling?" press [Y/+] to start. The pump turns on and the instrument begins collecting data. To stop sampling, press [N/-] while the main display is showing. You will see a new screen that says, "Stop sampling?" Press [Y/+] to stop sampling. Press [N/-] if you want sampling to continue.

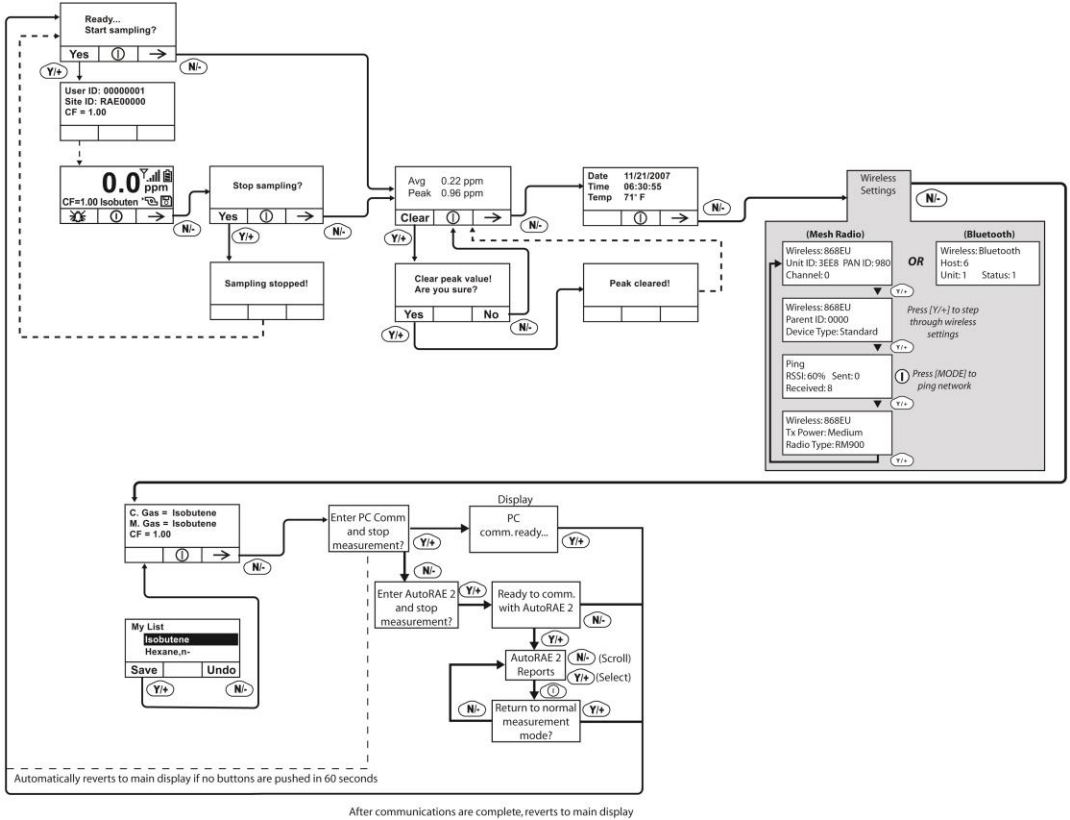

Note: Dashed line indicates automatic progression.

Advanced User Level & Search Mode

With the instrument in Operation Mode: Search Mode, enter User Mode and select Advanced User Level (refer to the section called Monitor Mode for instructions). Operation is similar to Basic User Level & Sampling Mode, but now allows you to change calibration and measurement reference gases. Refer to the section on measurement gases on page 60 for more details.

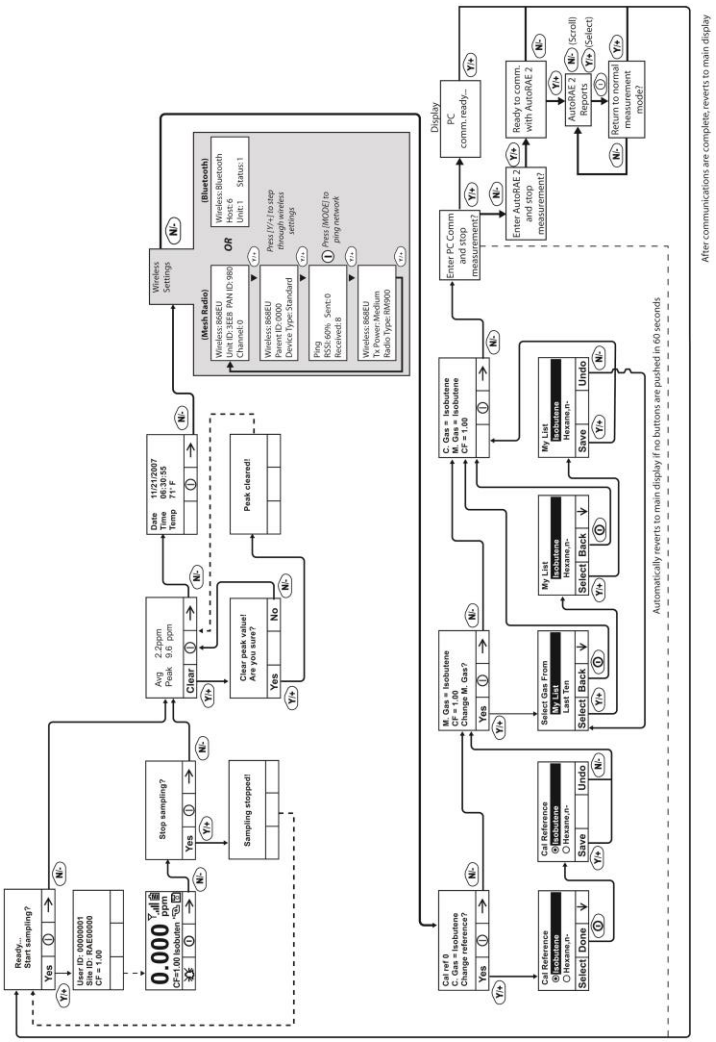

Note: Dashed line indicates automatic progression.

Diagnostic Mode

IMPORTANT! Diagnostic Mode is designed for servicing and manufacturing, and therefore is not intended for everyday use, even by advanced users. It provides raw data from sensors and about settings, but only allows adjustment of pump stall parameters, which should only be changed by qualified personnel.

Note: If the instrument is turned on in Diagnostic Mode and you switch to User Mode, datalog data remains in raw count form. To change to standard readings, you must restart the instrument.

Entering Diagnostic Mode

Note: To enter Diagnostic Mode, you must begin with the instrument turned off.

Press and hold [Y/+] and [MODE] until the instrument starts.

The instrument goes through a brief startup, and then displays raw data for the PID sensor. These numbers are raw sensor readings without calibration. The instrument is now in Diagnostic Mode.

Note: In Diagnostic Mode, the pump and lamp are normally on.

You can enter Programming Mode and calibrate the instrument as usual by pressing both [MODE] and [N/-] for three seconds.

You can enter Monitoring Mode by pressing [MODE] and [Y/+] together for three seconds.

Once the instrument is started up in Diagnostic Mode, you can switch between Diagnostic Mode and Monitoring Mode by pressing and holding [MODE] and [Y/+] simultaneously for two seconds.

In Diagnostic mode, you can step through parameter screens by pressing [MODE].

Adjusting The Pump Stall Threshold

If the gas inlet is blocked but the pump does not shut down, or the pump shuts down too easily with a slight blockage, the pump stall threshold value may be set too high or too low.

Use the following steps to adjust the pump stall threshold:

Pump High

In Diagnostic Mode, press the [MODE] key until "Pump High" is displayed. The display shows the maximum, minimum, and stall values for the pump at its high speed. Write down the "Max" reading.

Block the gas inlet and watch the pump current reading (labeled "I") increase. Write down its blocked reading. **Note:** If the pump current reading does not increase significantly (less than 10 counts), then there may be a leak in the gas inlet or the pump is weak or defective.

Add the two readings you wrote down. This is the average of the maximum block count and the maximum idle count. Divide that number by 2. Use the [Y/+] or [N/-] key to increase or decrease the stall value to equal that number.

Press the [MODE] key to exit this display.

Pump Low

In Diagnostic Mode, press the [MODE] key until "Pump Low" is displayed. The display shows the maximum, minimum, and stall values for the pump at its low speed. Write down the "Max" reading.

Block the gas inlet and watch the pump current reading (labeled "I") increase. Write down its blocked reading. **Note:** If the pump current reading does not increase significantly (less than 10 counts), then there may be a leak in the gas inlet or the pump is weak or defective.

Add the two readings you wrote down. This is the average of the maximum block count and the maximum idle count. Divide that

number by 2. Use the [Y/+] or [N/-] key to increase or decrease the stall value to equal that number.

Press the [MODE] key to exit this display.

Exiting Diagnostic Mode

You can exit Diagnostic Mode and go directly to Programming Mode or Monitor Mode as outlined above, or you can exit Diagnostic Mode completely.

To exit Diagnostic Mode so that it cannot be re-entered without a restart:

Shut down the instrument. When it is off, restart it by holding the [MODE] key. Diagnostic Mode cannot be entered until the instrument is restarted as outlined in "Entering Diagnostic Mode."

Transferring Data To & From A Computer

Once you have connected your instrument cradle to the PC, you can can transfer data, including a download of the datalog to the computer and updates of firmware to the instrument (should this ever be necessary).

Downloading The Datalog To A PC

1. Connect the data cable to the PC and the cradle.
2. Place the instrument into its cradle. The charging LED should be illuminated.
3. Start ProRAE Studio on your PC.
4. From ProRAE Studio, select "Operation" and select Setup Connection.
5. Select the COM port to establish a communication link between the PC and the instrument.
6. To receive the datalog in the PC, select "Downlog Datalog."
7. When you see "Unit Information," click OK.

During the data transfer, the display shows a progress bar.

When the transfer is done, you will see a screen with the datalog information. You can now export this datalog for other use or printing.

Uploading Firmware To The instrument From A PC

Uploading new firmware to your instrument requires connecting the instrument and PC. Follow these steps to make the connection:

1. Connect the data cable to the PC and the cradle.
2. Place the instrument into its cradle. The charging LED should be illuminated.
3. Start RAEProgrammer 7000 on your PC.
4. From RAEProgrammer 7000, select "Operation" and select Setup Connection.
5. Select the COM port to establish a communication link between the PC and the instrument.
6. Select Operation → Download Firmware.

Once communication is established, follow the instructions that accompany RAEProgrammer 7000 and the firmware to upload the new firmware to your instrument.

Note: Check for the latest updates to ProRAEProgrammer 7000 at www.raesystems.com.

Maintenance

The major maintenance items of the instrument are:

- Battery pack
- Sensor module
- PID lamp
- Sampling pump
- Inlet connectors and filters

Note: Maintenance should be performed by qualified personnel only.

NOTE: The printed circuit board of the instrument is connected to the battery pack even if the power is turned off. **Therefore, it is very important to disconnect the battery pack before servicing or replacing any components inside the instrument**. **Severe damage to the printed circuit board or battery may occur if the battery pack is not disconnected before servicing the unit.**

Battery Charging & Replacement

When the display shows a flashing empty battery icon, the battery requires recharging. It is recommended to recharge the instrument upon returning from fieldwork. A fully charged battery runs a instrument for 16 hours continuously. The charging time is less than 8 hours for a fully discharged battery. The battery may be replaced in the field (in areas known to be non-hazardous), if required.

WARNING!

To reduce the risk of ignition of hazardous atmospheres, recharge battery only in area known to be non-hazardous. **Remove and replace battery only in areas known to be non-hazardous.**

Replacing The Li-ion Battery

1. Turn off the instrument.
2. Located on the rear of the instrument is a battery tab. Slide it down to unlock the battery.

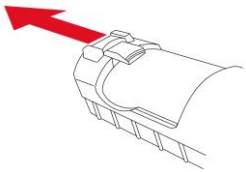

3. Remove the battery pack from the battery compartment by tilting it out.

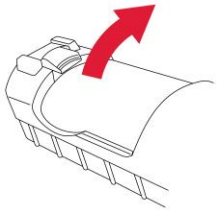

4. Replace a fully charged spare battery pack inside the battery compartment. Make sure the battery pack is oriented properly inside the compartment.
5. Slide the capture tab back up to its locked position.

Replacing The Alkaline Battery Adapter

An alkaline battery adapter is supplied with each instrument. The adapter (part number 059-3052-000) accepts four AA alkaline batteries (use only Duracell MN1500) and provides approximately 12 hours of operation. The adapter is intended to be used in emergency situations when there is no time to charge the Li-ion battery pack.

To insert batteries into the adapter:

1. Remove the three Philips-head screws to open the compartment.
2. Insert four fresh AA batteries as indicated by the polarity (+/-) markings.
3. Replace the cover. Replace the three screws.

To install the adapter in the instrument:

1. Remove the Li-ion battery pack from the battery compartment by sliding the tab and tilting out the battery.
2. Replace it with the alkaline battery adapter
3. Slide the tab back into place to secure the battery adapter.

IMPORTANT!

Alkaline batteries cannot be recharged. The instrument's internal circuit detects alkaline batteries and will not allow recharging. If you place the instrument in its cradle, the alkaline battery will not be recharged. The internal charging circuit is designed to prevent damage to alkaline batteries and the charging circuit when alkaline batteries are installed inside the instrument.

Note: When replacing alkaline batteries, dispose of old ones properly.

WARNING!

To reduce the risk of ignition of hazardous atmospheres, recharge the battery only in areas known to be non-hazardous. Remove and replace the battery only in areas known to be non-hazardous.

Note: The internal charging circuit is designed to prevent charging to alkaline batteries.

PID Sensor & Lamp Cleaning/Replacement

The sensor module is made of several components and is attached to the lamp-housing unit as shown below.

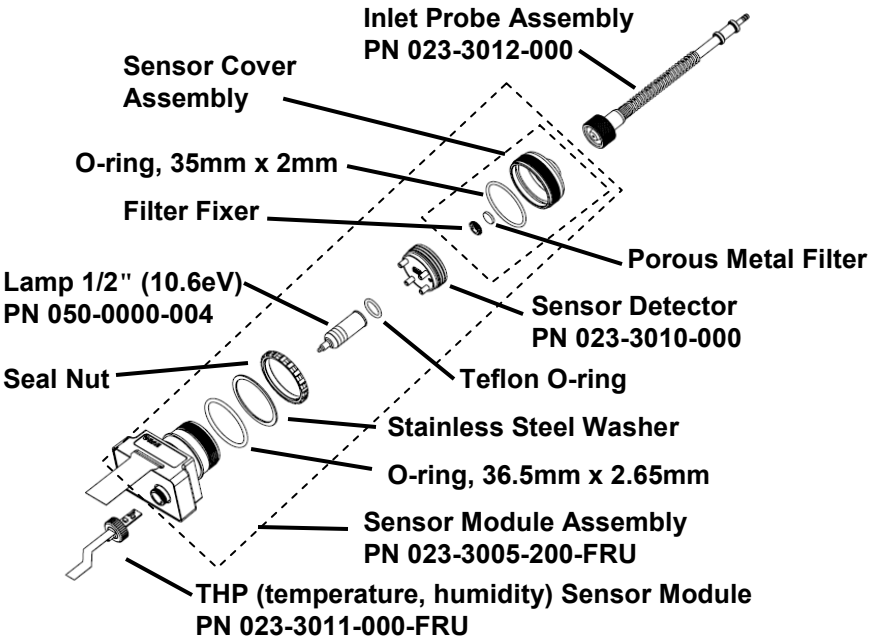

Sensor Components

Note: The cleaning procedure is not normally needed. Clean the PID sensor module, the lamp and the lamp housing only if:

1. The reading is inaccurate even after calibration.
2. The reading is very sensitive to air moisture.
3. A liquid has been sucked into the unit and damaged the unit.

Use of the external filter helps to prevent contamination of the sensor.

To access the sensor components and lamp, gently unscrew the lamp-housing cap, remove the sensor adapter with the gas inlet probe and the metal filter all together. Then hold the PID sensor and pull it straight out. A slight, gentle rocking motion helps release the sensor.

Cleaning The PID Sensor

Place the entire PID sensor module into GC grade methanol. It is highly recommended that an ultrasound bath to be used to clean the sensor for at least 15 minutes. Then dry the sensor thoroughly. Never touch the electrodes of the sensor by hand.
Also use a methanol-soaked cotton swab to wipe off the lamp housing where it contacts the sensor when the sensor is installed.

Turn over the sensor so that the pins point up and the sensor cavity is visible. Examine the sensor electrodes for any corrosion, damage, or bending out of alignment. The metal sensor electrode "fingers" should be flat and straight. If necessary, carefully bend the sensor fingers to ensure that they do not touch the Teflon portions and that they are parallel to each other. Make sure that the nuts on the sensor pins are snug but not overtight. If the sensor is corroded or otherwise damaged, it should be replaced.

Cleaning The Lamp Housing Or Changing The Lamp

If the lamp does not turn on, the instrument will display an error message to indicate replacement of the lamp may be required.

1. If the lamp is operational, clean the lamp window surface and the lamp housing by wiping it with GC grade methanol using a cotton swab using moderate pressure. After cleaning, hold the lamp up to the light at an angle to detect any remaining film. Repeat the process until the lamp window is clean. Never use water solutions to clean the lamp. Dry the lamp and the lamp housing thoroughly after cleaning.

   CAUTION: Never touch the window surface with the fingers or anything else that may leave a film. Never use acetone or aqueous solutions.

2. If the lamp does not turn on, remove the lamp from the lamp housing. Place the lamp O-ring onto the new lamp. Insert the new lamp, avoiding contact with the flat window surface.
3. Reinstall the PID sensor module.
4. Tighten the Lamp Housing Cap.

Determining The Lamp Type

The monitor can accommodate three lamp values: 10.6eV (standard), 9.8eV, and 11.7eV. Always make sure you are using the correct lamp value and that the instrument is set to use that lamp.

Also, when the monitor is running, the lamp type is shown along with the calibration and measurement gas and Correction Factor:

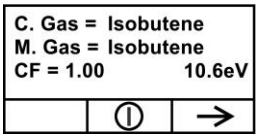

Note: This screen can be accessed from the reading screen by pressing [N/-] four times.

You can manually determine the lamp type, too:

1. Turn off the instrument and remove the lamp. Now look at the serial number. The following identify the lamp type:

    - 10.6eV SN: 106 2Nxxxxx
    - 9.8eV SN: 098 2Nxxxxx
    - 11.7eV SN: 117 2Nxxxxx

Programming The Lamp ID

The correct measurement gas library is used by the instrument when you ensure that the right lamp value is programmed.

To manually select the Lamp ID:

1. Enter the Programming menu.
2. Select Monitor Setup.
3. Scroll down and select the Lamp ID sub-menu.
4. Press [N/-] to scroll down to the desired Lamp ID.
5. Press [Y/+] to select.
6. Press [MODE] to select Done.
7. Select "Save."
8. Return to the main menu.

Recalibrate the instrument before returning it to service.

Sampling Pump

When approaching the end of the specified lifetime of the pump, it will consume higher amount of energy and reduce its sample draw capability significantly. When this occurs, it is necessary to replace or rebuild the pump. When checking the pump flow, make sure that the inlet connector is tight and the inlet tubing is in good condition. Connect a flow meter to the gas inlet probe. The flow rate should be above 450 cc/min when there is no air leakage.

If the pump is not working properly, refer the instrument to qualified service personnel for further testing and, if necessary, pump repair or replacement.

Cleaning The Instrument

Occasional cleaning with a soft cloth is recommended. Do not use detergents or chemicals.

Visually inspect the contacts at the base of the instrument, on the battery, and on the charging cradle to make sure they are clean. If they are not, wipe them with a soft, dry cloth. Never use solvents or cleaners.

Ordering Replacement Parts

If you need replacement parts, contact your local RAE Systems distributor. A list is available online:

http://www.raesystems.com

In the U.S., you can order sensors, replacement batteries, and other accessories online at:

http://istore.raesystems.com/

Special Servicing Note

If the instrument needs to be serviced, contact either:

1. The RAE Systems distributor from whom the instrument was purchased; they will return the instrument on your behalf.

   or

2. The RAE Systems Technical Service Department. Before returning the instrument for service or repair, obtain a Returned Material Authorization (RMA) number for proper tracking of your equipment. This number needs to be on all documentation and posted on the outside of the box in which the instrument is returned for service or upgrade. Packages without RMA Numbers will be refused at the factory.

Troubleshooting

Problem	Possible Reasons & Solutions	
Cannot turn on power after charging the battery	**Reasons:**	Discharged battery. Defective battery.
	Solutions:	Charge or replace battery.
Lost password	**Solutions:**	Call Technical Support at +1 408-752-0723 or toll-free at +1 888-723-4800
Reading abnormally High	**Reasons:**	Dirty filter. Dirty sensor module. Excessive moisture and water condensation. Incorrect calibration.
	Solutions:	Replace filter. Blow-dry the sensor module. Calibrate the unit.
Reading abnormally Low	**Reasons:**	Dirty filter. Dirty sensor module. Weak or dirty lamp. Incorrect calibration.
	Solutions:	Replace filter. Remove Calibration Adapter. Calibrate the unit. Check for air leakage.
Buzzer Inoperative	**Reasons:**	Bad buzzer.
	Solutions:	Check that buzzer is not turned off. Call authorized service center.

Inlet flow too low	**Reasons:**	Pump diaphragm damaged or has debris. Flow path leaks.
	Solutions:	Check flow path for leaks; sensor module O-ring, tube connectors, Teflon tube compression fitting. Call Technical Support at +1 408-752-0723 or toll-free at +1 888-723-4800
"Lamp" message during operation	**Reasons:**	Lamp drive circuit. Weak or defective PID lamp, defective.
	Solutions:	Turn the unit off and back on. Replace UV lamp

Technical Support

To contact RAE Systems Technical Support Team:

Monday through Friday, 7:00AM to 5:00PM Pacific (US) Time
Phone (toll-free): +1 888-723-4800
Phone: +1 408-952-8461
Email: tech@raesystems.com

RAE Systems Contacts

RAE Systems by Honeywell
World Headquarters
3775 N. First St.
San Jose, CA 95134-1708 USA
Phone: 408.952.8200
Toll-Free: 888.723.4800
Fax: 408.952.8480

E-mail (technical support): RAE-tech@honeywell.com
Web Site: www.raesystems.com

WORLDWIDE SALES OFFICES
USA/Canada 1.877.723.2878
Europe +800.333.222.44/+41.44.943.4380
Middle East +971.4.450.5852
China +86.10.5885.8788-3000
Asia Pacific +852.2669.0828

Controlled Part of Manual

Intrinsic Safety:
US and Canada: Class I, Division 1, Groups A,B,C,D T4

Europe: ATEX (0575 Ex II 2G Ex ia IIC/IIB T4 Gb)
KEMA 07 ATEX 0127
Complies with EN60079-0:2009, EN60079-11:2007
IECEx CSA 10.0005 Ex ia IIC/IIB T4 Gb
Complies with IEC 60079-0:2007, IEC 60079-11:2006

Temperature: -20º C to 50º C (-4º to 122º F)

Humidity: 0% to 95% relative humidity (non-condensing)

Basic Operation

Turning The Instrument On

1. With the instrument turned off, press and hold [MODE].
2. When the display turns on, release the [MODE] key.

The instrument is now operating and performs self tests. Once the self tests are complete, the display shows a graph or numerical gas reading. This indicates that the instrument is fully functional and ready to use.

Turning The Instrument Off

1. Press and hold the Mode key for 3 seconds. A 5-second countdown to shutoff begins.
2. When you see "Unit off..." release your finger from the [MODE] key. The instrument is now off.

Note: You must hold your finger on the key for the entire shutoff process. If you remove your finger from the key during the countdown, the shutoff operation is canceled and the instrument continues normal operation.

Alarm Signals

During each measurement period, the gas concentration is compared with the programmed alarm limits (gas concentration alarm limit settings). If the concentration exceeds any of the preset limits, the loud buzzer and red flashing LED are activated immediately to warn you of the alarm condition.

In addition, the instrument alarms if one of the following conditions occurs: battery voltage falls below a preset voltage level, failure of the UV lamp, pump stall, or when the datalog memory is full.

Alarm Signal Summary

Message	Condition	Alarm Signal
HIGH	Gas exceeds "High Alarm" limit	3 beeps/flashes per second*
OVR	Gas exceeds measurement range	3 beeps/flashes per second*
MAX	Gas exceeds electronics' maximum range	3 beeps/flashes per second*
LOW	Gas exceeds "Low Alarm" limit	2 beeps/flashes per second*
TWA	Gas exceeds "TWA" limit	1 Beep/flash per second*
STEL	Gas exceeds "STEL" limit	1 Beep/flash per second*
Pump icon flashes	Pump failure	3 beeps/flashes per second
Lamp	PID lamp failure	3 beeps/flashes per second plus "Lamp" message on display

Battery icon flashes	Low battery	1 flash, 1 beep per minute plus battery icon flashes on display
CAL	Calibration failed, or needs calibration	1 beep/flash per second
NEG	Gas reading measures less than number stored in calibration	1 beep/flash per second

Preset Alarm Limits & Calibration

The instrument is factory calibrated with standard calibration gas, and is programmed with default alarm limits.

Cal Gas (Isobutylene)	Cal Span	unit	Low	High	TWA	STEL
ppbRAE 3000	10	ppm	10	25	10	25
MiniRAE 3000	100	ppm	50	100	10	25
MiniRAE Lite	100	ppm	50	100	10	25
UltraRAE 3000	100	ppm	50	100	10	25

Charging The Battery

Always fully charge the battery before using the instrument. The instrument's Li-ion/NiMH battery is charged by placing the instrument in its cradle. Contacts on the bottom of the instrument meet the cradle's contacts, transferring power without other connections.

Note: Before setting the instrument into its charging cradle, visually inspect the contacts to make sure they are clean. If they are not, wipe them with a soft cloth. Do not use solvents or cleaners.

Follow this procedure to charge the instrument:

1. Plug the AC/DC adapter's barrel connector into the instrument's cradle.

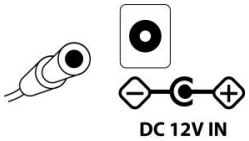

2. Plug the AC/DC adapter into the wall outlet.
3. Place the instrument into the cradle, press down, and lean it back. It locks in place and the LED in the cradle glows.

Note: To release the instrument, press down and tilt the top out of the cradle and lift up.

The instrument begins charging automatically. The LED on the front of the cradle marked "Primary" blinks during charging. During charging, the diagonal lines in the battery icon on the instrument's display are animated and you see the message "Charging..."

When the instrument's battery is fully charged, the battery icon is no longer animated and shows a full battery. The message "Fully charged!" is shown and the Primary LED on the cradle glows continuously green.

Note: A spare Li-ion battery (059-3051-000) or NiMH(059-3054-000) can be charged by placing it directly in the charging port on the back of the cradle. It can be charged at the same time as the instrument. Press the battery in place, sliding it slightly toward the front of the cradle. This locks it in the cradle. To release the battery, slide it forward again and tilt it up.

Note: An Alkaline Battery Adapter (part number 059-3052-000), which uses four AA alkaline batteries (Duracell MN1500), may be substituted for the Li-Ion battery.

WARNING!

To reduce the risk of ignition of hazardous atmospheres, recharge and replace batteries only in areas known to be non-hazardous. **Remove and replace batteries only in areas known to be non-hazardous.**

Low Voltage Warning

When the battery's charge falls below a preset voltage, the instrument warns you by beeping once and flashing once every minute, and the battery icon blinks once per second. You should turn off the instrument within 10 minutes and either recharge the battery by placing the instrument in its cradle, or replace the battery with a fresh one with a full charge.

Clock Battery

An internal clock battery is mounted on one of the instrument's printed circuit boards. This long-life battery keeps settings in memory from being lost whenever the Li-ion, NiMH, or alkaline batteries are removed. This backup battery should last approximately five years, and must be replaced by an authorized RAE Systems service technician. It is not user-replaceable.

WARNING

To reduce the risk of ignition of hazardous atmospheres, recharge battery only in area known to be non-hazardous. Remove and replace battery only in an area known to be non-hazardous.

Replacing Rechargeable Li-Ion or NiMH Battery

Caution: Turn off the instrument before removing or replacing the battery.

Alkaline Battery Adapter

An alkaline battery adapter is supplied with each instrument. The adapter (part number 059-3052-000) accepts four AA alkaline batteries (use only Duracell MN1500).

Do not mix old and new batteries or different type batteries.

Troubleshooting

Problem	Possible Reasons & Solutions	
Cannot turn on power after charging the battery	**Reasons:**	Discharged battery. Defective battery.
	Solutions:	Charge or replace battery.
Lost password	**Solutions:**	Call Technical Support at +1 408-752-0723 or toll-free at +1 888-723-4800
Reading abnormally High	**Reasons:**	Dirty filter. Dirty sensor module. Excessive moisture and water condensation. Incorrect calibration.
	Solutions:	Replace filter. Blow-dry the sensor module. Calibrate the unit.
Reading abnormally Low	**Reasons:**	Dirty filter. Dirty sensor module. Weak or dirty lamp. Incorrect calibration.
	Solutions:	Replace filter. Remove Calibration Adapter. Calibrate the unit. Check for air leakage.
Buzzer Inoperative	**Reasons:**	Bad buzzer.
	Solutions:	Check that buzzer is not turned off. Call authorized service center.

Inlet flow too low	**Reasons:**	Pump diaphragm damaged or has debris. Flow path leaks.
	Solutions:	Check flow path for leaks; sensor module O-ring, tube connectors, Teflon tube compression fitting. Call Technical Support at +1 408-752-0723 or toll-free at +1 888-723-4800
"Lamp" message during operation	**Reasons:**	Lamp drive circuit. Weak or defective PID lamp, defective.
	Solutions:	Turn the unit off and back on. Replace UV lamp

RAE Systems by Honeywell
World Headquarters
3775 N. First St.
San Jose, CA 95134-1708 USA
Phone: 408.952.8200
Toll-Free: 888.723.4800
Fax: 408.952.8480

E-mail (technical support): RAE-tech@honeywell.com
Web Site: www.raesystems.com

WORLDWIDE SALES OFFICES
USA/Canada 1.877.723.2878
Europe +800.333.222.44/+41.44.943.4380
Middle East +971.4.450.5852
China +86.10.5885.8788-3000
Asia Pacific +852.2669.0828

Rev. F
February 2016
P/N 059-4020-000

Appendix F

Field Forms

OU-1 SVE MONITORING FORM

Omega OU-1 SVE System

Date: **Technician:**

Extraction Data

Item/Well ID	Valve Position x/6 or (% OPEN)	Time hh:mm	Temperature °F	Pressure "Hg	Pressure "H_2O	Relative Humidity %	Flow Rate scfm	Flow Rate acfm	PID Reading ppm	Sample Taken? (Y/N)	Notes
DPE-8	/6										
DPE-9	/6										
DPE-5	/6										
VE-14D	/6										
VE-9S SPARE	/6										
DPE-4	/6										
DPE-3	/6										
VE-15S											
VE-1S											
VE-12S											
VE-10S											
VE-11S											
VE-9S											
VE-8S											
VE-5S											
VE-11S SPARE											
VE-6S											
VE-14S											
VE-2D											
VE-2DA											
VE-2DB											
VE-21S											
VE-31S											
VE-34S											
VE-39S											
VE-8S SPARE											
COMBINED WELLS	-										

Calibration: ***Results:***

0.0 (Fresh Air): _____ **PID Used:** OPOG or Rental?

Process Calibration: _____ ** PID CALIBRATED TO 5.0 PPM HEXANE*

VEW Calibration: _____ ** PID CALIBRATED TO 1.0 PPM ISOBUTYLENE*

Magnehelic Differential Pressure - Use "H_2O to ACFM conversion chart

Inlet Header (acfm): _____

Discharge Header (acfm): _____

Ambient Temperature (°F): _____

Moisture Separator Data:

Dilution Valve: _____ (% OPEN)

Air Filter Cleaned? _____ (Y/N)

Water in Knockout? _____ (Y/N) _____ inches

System Control Panel:

Time: _____ **Switch Position:**

Transfer Pump: _____ (H / O / A)

Heat Exchanger: _____ (H / O / A)

SVE Blower: 19,554.2 hrs + _____ = _____ hrs (H / O / A)

Electrical Meter: _____ kWh

Blower Data: **Control Panel:** _____ (ON/OFF) **Suction Flow:** _____ (scfm) **Oil Changed?** _____ (Y/N) **Date:** _____

Pressure: **Suction:** _____ "Hg **Discharge:** _____ "Hg **VFD Frequency:** _____ Hz

Heat Exchanger Data:

HX Motor / Fan: _____ (ON/OFF) **HX Cleaned?** _____ (Y/N) **Influent Temperature:** _____ °F

Operating Condition: _____ (GOOD/FAIR/POOR) **Effluent Temperature:** _____ °F

GAC Data

Item	Time hhmm	Temperature °F	Pressure "H_20	Relative Humidity %	Flow Rate scfm	Flow Rate acfm	PID Reading* ppb	ppb/1,000 ppm	Sample Taken? (Y/N)	Notes
INFLUENT					*Limit=1,280*					
MIDPOINT		N/A		N/A	N/A	N/A				
EFFLUENT								Limit=15.0 ppm		

Is System Off Upon Arrival? _____ (Y/N)

Auto-Dialer Checked? _____ (Y/N)

GAC Change-Out - Shutdown: _____ (Time) **Restart:** _____ (Time)

Is Auto-Dialer Working (Explain Below)? _____ (Y/N)

Notes:

JHA ENVIRONMENTAL

Calscience Environmental Laboratories, Inc.
7440 LINCOLN WAY
GARDEN GROVE, CA 92841-1427
TEL: (714) 895-5494 . FAX: (714) 894-7501

AIR CHAIN OF CUSTODY RECORD

DATE: _____
PAGE: _____ OF _____

LABORATORY CLIENT: de maximis	CLIENT PROJECT NAME / NUMBER:	P.O. NO.:
ADDRESS: 1322 Scott St., Suite 104	PROJECT ADDRESS: 12520 Whittier Blvd.	LAB CONTACT OR QUOTE NO.:
CITY: San Diego STATE: CA ZIP: 92106	CITY: Whittier STATE: CA ZIP: 90602	LAB USE ONLY ☐☐-☐☐☐☐
TEL: (562) 756-8149 EMAIL: jdinello@demaximis.com	PROJECT CONTACT: Trent Henderson thenderson@jacobandhefner.com	
TURNAROUND TIME: ☐ SAME DAY ☐ 24 HR ☐ 48 HR ☐ 72 HR ☐ 5 DAYS ☐ 10 DAYS	SAMPLER(S): (NAME / SIGNATURE)	REQUESTED ANALYSES
SPECIAL REQUIREMENTS (ADDITIONAL COSTS MAY APPLY) ☐ EDD		
SPECIAL INSTRUCTIONS:		

LAB USE ONLY	SAMPLE ID	FIELD ID / Point of Collection	Air Type (I) Indoor (SV) Soil Vap. (A) Ambient	Sampling Equipment Info: Canister ID#	Canister Size 6L or 1L	Flow Controller ID#	Start Sampling Information: Date	Time (24hr clock)	Canister Pressure ("Hg)	Stop Sampling Information: Date	Time (24hr clock)	Canister Pressure ("Hg)	TO-15 (TAL 2.3)				
1													X				
2													X				
3													X				
4																	
5																	
6																	
7																	
8																	
9																	
10																	
11																	
12																	
13																	
14																	
15																	

Relinquished by: (Signature)	Received by: (Signature)	Date: Time:
Relinquished by: (Signature)	Received by: (Signature)	Date: Time:
Relinquished by: (Signature)	Received by: (Signature)	Date: Time:

CALIBRATION PARAMETER LOG FORM

Date	Time	Manufacturer	Model	Serial #	Cal gas	PPM	0-gas	1st reading	2nd reading	3rd reading	Initials	Comments

SYSTEM SAMPLE COLLECTION LOG
Omega Chemical Superfund Site

Date	Time of Sample Collection	Name of Sampler	Sample ID	Matrix / Laboratory for Analysis	Analyses Requested (check appropriate boxes)				Sampling Purpose[1]	Int. Vac. "Hg	Final Vac. "Hg	Cannister I.D.	Flow Controller I.D.
					TO-15 (TAL 2.3)	TO-15 (TAL 2.4)							

Appendix G

Sampling and Analysis Plan

Sampling and Analysis Plan

Omega Chemical Superfund Site,
Whittier, California

Prepared by:
CDM Smith
46 Discovery #250
Irvine, CA 92618

December 21, 2018

Table of Contents

Section G.1 Introduction 1-1
G.1.1 Purpose 1-1
G.1.2 Document Organization 1-2

Section G.2 Project Management 2-1
G.2.1 Distribution List 2-1
G.2.2 Project/ Task Organization 2-1
G.2.3 Problem Definition/Background 2-2
G.2.3.1 Former Omega Chemical Property 2-2
G.2.4 Project Task Description 2-4
G.2.5 Data Quality Objectives and Criteria 2-4
G.2.6 Data Measurement Objectives 2-12
G.2.7 Documentation and Records 2-14

Section G.3 Data Generation and Acquisition 3-1
G.3.1 Sampling Process Design 3-1
G.3.1.1 Sampling Locations 3-1
G.3.1.1.1 Performance Sampling Locations 3-1
G.3.1.1.2 Operational Sampling Locations 3-1
G.3.2 Sampling Methods and Procedures 3-1
G.3.2.1 Sampling Equipment and Preparation 3-3
G.3.2.2.1 Equipment testing, inspection and maintenance 3-3
G.3.2.2.2 Equipment Calibration and Frequency 3-3
G.3.2.2.3 Equipment Decontamination 3-3
G.3.2.2 Sample Containers and Collection 3-4
G.3.3 Sample Handling and Custody 3-4
G.3.3.1 Sample Labeling 3-4
G.3.3.2 Sample Packaging and shipment 3-5
G.3.3.3 Field Sample Custody and Documentation 3-5
G.3.3.3.1 Field Logs 3-6
G.3.3.4 Laboratory Custody Procedures and Documentation 3-7
G.3.3.5 Correction to and Deviation from Custody Documentation 3-8
G.3.4 Analytical Method Requirements 3-8
G.3.4.1 Analytical SOP and Requirements 3-8
G.3.4.2 Containment and Disposal of Investigation-Derived Waste 3-8
G.3.5 Quality Control 3-9
G.3.5.1 Field Quality Control Samples 3-9
G.3.5.2 Laboratory Quality Control Samples 3-9
G.3.5.3 Internal Quality Control Checks 3-11
G.3.6 Laboratory Equipment Management 3-11
G.3.7 Data Management 3-12
G.3.7.1 Analytical Database 3-12

G.3.7.1.1 Data Inclusions....3-12
G.3.7.2 Document Storage....3-12
G.3.7.2.1 Laboratory Record Keeping....3-12
G.3.7.2.2 Electronic Data Files....3-13
G.3.7.3 Non-Direct Measurements....3-13

Section G.4 Assessment and Oversight....4-1
G.4.1 Assessments and Response Actions....4-1
G.4.2 Reporting....4-2

Section G.5 Data Validation and Usability....5-1
G.5.1 Data Review, Verification, and Validation....5-1
G.5.2 Validation and Verification Methods....5-1
G.5.3 Reconciliation with User Requirements....5-5

Section G.6 References....6-1

List of Tables

Table G-2-1: Project and Laboratory Concentration Limits

Table G-2-2: Laboratory Data Deliverable Requirements

Table G-2-3: Summary of Minimum Laboratory Quality Control Requirements

Table G-2-4: Surrogate and Laboratory Control Sample Quality Control Limits

Table G-3-1: Applicable SOPs for Monitoring Procedures

Table G-3-2: Sample Identification Codes

Table G-5-1: Data Validation Requirements

Acronyms

%R	percent recovery
µg/m^3	micrograms per cubic meter
ACFM	actual cubic feet per minute
AOC	Administrative Settlement Agreement and Order on Consent
bgs	below ground surface
CD	Consent Decree
CDM Smith	CDM Smith Inc.
COC	chain of custody
deg F	degrees Fahrenheit
deg R	degrees Rankine
DPE	dual-phase extraction
DQO	Data Quality Objective
ft	feet
GAC	granular activated carbon
GCR	Groundwater Containment Remedy
HRA	Health Risk Assessment
IDW	investigation-derived waste
L	Liter
LCS	laboratory control sample
MDL	method detection limit
MS	mass spectrometer
NELAP	National Environmental Laboratory Accreditation Program
OM&M	operation, maintenance, and monitoring
OPOG	Omega Chemical Site PRP Organized Group
OU	Operable Unit
PARCCS	precision, accuracy, representativeness, completeness, comparability and sensitivity
PID	photoionization detector
PRP	Potentially Responsible Parties
psi	pounds per square inch
psia	pounds per square inch absolute
QA	quality assurance
QAPP	Quality Assurance Project Plan
QC	quality control
RAO	Remedial Action Objective
RL	reporting limit
ROD	Record of Decision
RPD	relative percent difference
RSL	Regional Screening Levels
SAP	Sampling and Analysis Plan
SCAQMD	South Coast Air Quality Management District
SCFM	standard cubic feet per minute
SIM	Selected Ion Monitoring
SOP	standard operating procedure
SOW	Statement of Work
SVE	soil vapor extraction
USEPA	United States Environmental Protection Agency

VEW	vapor extraction well
VMP	vapor monitoring probe
VOC	volatile organic contaminant

Section G.1
Introduction

Operable Unit (OU) 1 of the Omega Chemical Superfund Site is defined as the area of soil and groundwater contamination associated with the former Omega Chemical property located at 12504 and 12512 Whittier Boulevard, Whittier, California, and extending downgradient approximately 100 feet (ft) southwest of Putnam Street, Whittier, California (see **Figure 1-1** of the Operation, Maintenance and Monitoring (OM&M) Manual). The October 6, 2010 Consent Decree No. 10-05051 (CD) between the United States Environmental Protection Agency (USEPA) and Omega Chemical Site Potentially Responsible Parties (PRP) Organized Group (OPOG) requires OPOG to design, construct, and operate a Full-Scale soil vapor extraction (SVE) and treatment system and monitor the remedial action to address vadose zone soil contamination within OU-1 (USEPA 2010). OPOG completed construction of the Full Scale On-Site (OU-1) Soil Remedy in 2015 and has been operating it since.[1]

On behalf of OPOG, CDM Smith Inc. (CDM Smith) has prepared this Sampling and Analysis Plan (SAP) for monitoring conducted during operation of the OU-1 SVE system. This SAP is included as Appendix G to the OU-1 SVE system OM&M Manual, and was prepared in accordance with the Statement of Work (SOW) under the CD, which was lodged into the U.S. District Court, Central District of California, on July 16, 2010 (USEPA 2010).

G.1.1 Purpose

In accordance with the requirements of Section 11.7.3 of the SOW, the purpose of this SAP is to provide a Compliance Monitoring SAP as part of the OM&M Manual to which this SAP is an Appendix. This SAP also incorporates the components of a Field Sampling Plan and Quality Assurance Project Plan (QAPP) for monitoring the OU-1 SVE system, in alignment with Section 2.2.3 of the SOW. CDM Smith has prepared this document in accordance with the *EPA Requirements for Quality Assurance Project Plans* (EPA QA/R-5, 2001), the EPA *Guidance on Systematic Planning Using the Data Quality Objectives Process* (EPA QA/G-4, 2006), and the regional guidance document *Preparation of a Region 9 Field Sampling Plan for Private and State-Lead Superfund Projects* (EPA QAMS DCN 9QA-06-93, 1993).

The objectives of this SAP are as follows:

- Present a brief description of the project and its background;
- Identify Data Quality Objectives (DQOs) to create a sampling design and data collection process;

[1] All OU-1 SVE system design and installation phases are detailed in the Remedial Action Construction Complete Report (RACCR) (CDM Smith 2018).

- Develop the procedures for routine sampling and analysis during operation of the OU-1 SVE system; and
- Present Quality Assurance (QA) /Quality Control (QC) procedures for routine sampling and analysis during operation of the OU-1 SVE system.

G.1.2 Document Organization

This SAP consists of six sections:

- Section 2 presents the project management roles and responsibilities, the DQOs, and other project information;
- Section 3 describes data generation, acquisition, and management, including sample handling and custody, analytical methods, and QC measures;
- Section 4 presents assessment and oversight procedures;
- Section 5 presents data validation practices and data usability information; and
- Section 6 presents references cited in the document.

This SAP references sections, figures, and tables that are present in this SAP and in the OM&M Manual to which this SAP is appended as **Appendix G**. All references with a "G" prefix (e.g., "Table G-2-1") are contained within this SAP, and any references without the "G" prefix (e.g., "Table 2-1") are contained within the OM&M Manual. Figures and tables presented in this SAP are provided at the end of the section in which they are first presented.

Section G.2
Project Management

G.2.1 Distribution List

The SAP will be distributed to the following agencies and individuals:

	United States Environmental Protection Agency Region 9	California Department of Toxic Substances Control - Site and Brownfields Reuse Program
Employee Name	Mr. Wayne Praskins	Mr. Don Indermill
Address	75 Hawthorne Street San Francisco, California 94105	9211 Oakdale Avenue Chatsworth, CA 91311
Phone	(415) 972-3181	(818) 717-6561
Contact Email	Praskins.Wayne@epa.gov	Don.Indermill@dtsc.ca.gov

G.2.2 Project/ Task Organization

This section presents the project team organization and team member responsibilities. Specifying the roles of each project team member aids in defining the project's goal so that all participants understand the approach to be used to achieve that goal.

The project is overseen by the Project Coordinator, whose primary role is to facilitate communication and collaboration with all stakeholders and members of the project team, including USEPA, OPOG, the Environmental Consultant, subcontracted laboratories, the OM&M Contractor, and the QA Manager. The Project Coordinator fulfills the following responsibilities:

- Supervising production and review of project deliverables;
- Maintaining project files;
- Providing oversight of data management activities;
- Tracking work progress against planned budgets and schedules;
- Scheduling OM&M activities conducted by field staff and subcontractors;
- Communicating with OPOG and USEPA; and
- Preparing quarterly reports on the status and performance of the On-Site (OU-1) Soils Remedy.

Another key role on the project team is that of the Environmental Consultant. The role of the Environmental Consultant is to provide engineering services and technical support for the project. The Environmental Consultant has the following responsibilities:

- Provide technical support for the OU-1 SVE system OM&M activities;

- Assist with preparation of technical documents;
- Preparation of technical reports and memoranda as requested by the Project Coordinator;
- Reviewing analytical and field data; and
- Providing review of quarterly reports.

The role of the project's QA Manager is to fulfill the following responsibilities:

- Maintaining QA oversight and reviewing QA/QC procedures of this project;
- Overseeing all data validation activities conducted by other employees of the QA Management firm;
- Maintaining all project data on a web-based database (the Project Portal); and
- Developing data packages as needed for technical review by the Project Coordinator and Environmental Consultant.

All OM&M field activities are the responsibility of the OM&M Contractor.

G.2.3 Problem Definition/Background

The following section is a summary of information regarding previous owners, operations, and known historical chemical use at the former Omega property.

G.2.3.1 Former Omega Chemical Property

The former Omega property was developed in 1951 and occupies Los Angeles County Assessor Tract No. 13486, Lots 3 and 4. The property is approximately 41,000 square ft in area (200 ft wide by 205 ft long), which is equal to approximately 1 acre. Two structures are located on the Site – an approximate 140 by 50 ft warehouse and approximate 80 by 30 ft administrative building. These buildings comprise about one-quarter of the Site. A loading dock is attached to the rear of the warehouse. The property is paved with concrete and secured with a seven-foot high perimeter fence and locking gate. The fence is topped with razor wire. Prior to construction of the buildings in July 1951, the property was used for agriculture.

A summary of property owners/operators is provided below:

- 1951 – property developed, office and warehouse are constructed for Sierra Bullets. During operation of the Sierra Bullets facility, a 500-gallon underground storage tank was utilized for storage of kerosene.
- 1963 through 1966 - property purchased and occupied by Fred R. Rippy, Inc.
- 1966 through 1971– property used to convert vans to ambulances.
- 1971 through 1976 – property occupied by Bachelor Chemical.

- 1976 – Omega Chemical (Mr. Dennis O'Meara) purchases Bachelor Chemical Processing (northwestern half) and assumes the property lease from Rippy.
- 1987 – Omega Chemical purchases the leased parcel and adjoining southeastern section from Rippy.
- April 11, 1991 – Omega ordered by the Superior Court of the County of Los Angeles to cease operation, remove all hazardous wastes, and close the facility.
- September 1991 – Omega files Chapter 11 bankruptcy, which was dismissed on September 7, 1993.
- 2003 - Van Owen Holdings LLC of Los Angeles, California purchased the former Omega Chemical property which was divided into two parcels at the time of purchase: 12504 Whittier Boulevard and 12512 Whittier Boulevard.

The Omega facility provided treatment of commercial and industrial solid and liquid wastes (primarily chlorinated solvents) and a transfer station for storage and consolidation of wastes for shipment to other treatment and or disposal facilities. As described in the Record of Decision (ROD), the Omega Facility maintained eleven treatment units comprised of distillation columns, reactors, wipe film processor, liquid extractor, and a solid waste grinder (USEPA 2008). The facility also maintained 22-stainless steel tanks with capacities ranging from 500 to 10,000 gallons, and five carbon steel tanks with capacities of 5,000 gallons (USEPA 2008).

Waste handling practices at Omega resulted in spillage of waste materials into the soils beneath the facility. Contaminants associated with Omega have migrated laterally through the vadose zone to areas adjacent to the former Omega property. Contaminants associated with Omega have also migrated vertically to groundwater underlying and down gradient of the former Omega property. Contamination related to the former Omega Chemical facility is being addressed under multiple OUs, as described below.

OU-1 addresses soil and groundwater contamination on and near the former Omega facility property. As described in the 2008 OU-1 ROD, and shown on **Figure 1**, OU-1 encompasses the former Omega property and an area approximately 100 ft southwest of Putnam Street (USEPA 2008). In 2001, USEPA lodged Partial CD 00-12471, directing OPOG to initiate a Non-Time Critical Removal Action to address OU-1 groundwater contamination (USEPA 2001). In 2009 OPOG completed an interim Groundwater Containment Remedy (GCR) to extract and treat OU-1 groundwater (CDM 2010a). OPOG continues to operate and maintain the GCR (de maximis, inc. [de maximis] 2018). In 2010, under CD No. 10-05051, USEPA instructed OPOG to design and construct a remedy to extract and treat OU-1 soil vapor (USEPA 2010). This SAP pertains to the OU-1 SVE system, which serves as the Full Scale On-Site (OU-1) Soil Remedy.

In 2009, USEPA issued an Administrative Settlement Agreement and Order on Consent (AOC) for Removal Action requiring OPOG to take interim actions to address indoor air quality concerns and sample indoor air at buildings near the former Omega facility (USEPA 2009). OPOG installed an SVE system to mitigate vapor intrusion, began operation of this system in 2012, and continues to operate as along with the ongoing collection of indoor air samples (de maximis 2012, de maximis 2018).

OU-2 addresses contamination in groundwater generally downgradient of the former Omega property, much of which has commingled with chemicals released at other locations into a regional plume containing multiple contaminants which, when considered in total, is more than four miles long and one mile wide. In 2011, USEPA issued an Interim Action ROD for OU-2 groundwater (USEPA 2011). The interim action will consist of groundwater extraction and treatment.

At the time of this SAP, the remaining buildings within the OU-1 boundary are zoned for commercial and industrial use only. Additional historical information on the former Omega Chemical property and adjacent parcels is presented in the ROD (USEPA 2008).

G.2.4 Project Task Description

This SAP was developed to document the routine sampling and analyses, with associated QA/QC procedures, planned for the OU-1 SVE system during full operation. Schedules associated with the sampling plan can be found in Sections 4 and 5 of the OM&M Manual.

Figure 2-1 in the OM&M Manual presents a layout of the OU-1 SVE system, and **Appendix C** contains the Record Drawings. The OU-1 SVE system consists of a series of vapor extraction wells (VEWs), dual-phase extraction (DPE) wells, a vapor treatment plant, and an associated network of vapor monitoring probes (VMPs) for evaluating performance. At the treatment compound, the pipes from each VEW and DPE well are manifolded together into a common header and connected to the treatment plant, which consists of a moisture separator, a positive displacement vacuum blower, a heat exchanger, and two vapor-phase granular activated carbon (GAC) adsorbers for off-gas treatment prior to discharge to the atmosphere.

Each component of the OU-1 SVE system is sampled and monitored to confirm that the System is operating at optimal conditions and performing relative to the DQOs, as described in the following section.

G.2.5 Data Quality Objectives and Criteria

The DQO process is a comprehensive evaluation to identify the project/task objectives and goals to determine the sampling design and data collection appropriate for the task.

The DQO process is a series of seven iterative planning steps that are designed to confirm that the type, quantity, and quality of environmental data used in decision-making are appropriate for the intended purpose. The USEPA has issued guidelines to help data users develop site-specific DQOs (USEPA 2006). The DQO process is intended to:

- Clarify the study objective;
- Define the most appropriate type of data to collect;
- Determine the most appropriate conditions from which to collect the data; and
- Specify acceptable levels of decision errors that will be used as the basis for establishing the quantity and quality of data needed to support the design.

The DQO process specifies project decisions, the data quality required to support those decisions, specific data types needed, data collection requirements, and analytical techniques necessary to generate the specified data quality. The process also verifies that the resources required to generate the data are justified. The DQO process consists of seven steps of which the output from each step influences the choices that will be made later in the process. These steps are as follows:

- Step 1: state the problem;
- Step 2: identify the goal of the study;
- Step 3: identify the information inputs;
- Step 4: define the boundaries of the study;
- Step 5: develop the analytic approach;
- Step 6: specify performance or acceptance criteria; and
- Step 7: develop the plan for obtaining data.

During the first six steps of the process, the planning team develops decision performance criteria (i.e. DQOs) that will be used to develop the data collection design. The final step of the process involves designing the data collection program based on the DQOs.

Step 1: State the Problem

The purpose of this step is to describe the problem to be studied so that the focus of the study will be unambiguous. As noted in Sections 4 and 5 of the OM&M Manual, this SAP covers both the performance monitoring relative to the Remedial Action Objectives (RAOs) specified in the ROD, and the operational monitoring relative to the operation and maintenance of the OU-1 SVE system.

The problem is therefore stated as follows:

1. There is a need to assess the effectiveness of Full Scale On-Site (OU-1) Soil Remedy with regard to RAO #1, which is to reduce or eliminate the vapor intrusion risk associated with volatile organic contaminants (VOCs) in OU-1 contaminated soils.
2. There is a need to assess the effectiveness of the Full Scale On-Site (OU-1) Soil Remedy with regard to RAO #2, which is to reduce or eliminate risk associated with direct exposure to, contact with, and/or ingestion of OU-1 contaminated soils.
3. There is a need to assess the effectiveness of the Full Scale On-Site (OU-1) Soil Remedy with regard to RAO #3, which is to reduce or eliminate contaminant migration to groundwater to levels that protect the groundwater resource.[2]

[2] With regard to RAO #3, USEPA has acknowledged that the nature and extent of contamination in the source zone complicates compliance with RAO #3 as written in the ROD. VOC mass in the deep vadose zone continues to be removed by the implemented remedy.

4. There is a need to demonstrate substantive compliance with the South Coast Air Quality Management District's (SCAQMD) applicable rules and regulations for the effluent discharge of the OU-1 SVE system.

5. There is a need to assess the effectiveness and efficiency of the OU-1 SVE system's operations and maintenance practices.

Step 2: Identify the Goal of the Study

This step identifies the questions that the investigation will attempt to resolve, and actions that may take place based on investigation results.

Based on the project problems discussed in Step 1, the following questions were evaluated to determine the goals of the project.

- Who will use this data?
  - USEPA, OPOG, the Project Coordinator, the project's Environmental Consultant, the QA Manager, the OM&M Contractor, and/or any other OPOG-approved subcontractors.
- What will the data be used for?
  - To determine if the OU-1 SVE system is performing relative to the RAOs.
  - To determine if the OU-1 SVE system effluent is substantive compliance with SCAQMD requirements.
  - To determine if the OU-1 SVE system is operating effectively and efficiently.
- What types of data are needed?
  - Performance monitoring data: indoor air and soil gas VOC concentrations.
  - Operational monitoring data: soil vacuum levels, system operational runtime data, and VOC concentrations (via analytical sampling and field instruments) and flow rate, vacuum, pressure, temperature, and relative humidity measurements from the VEWs, DPE wells, and various locations in the treatment plant.
- What are the project action limits?
  - Indoor air screening levels which are defined by the USEPA Regional Screening Levels (RSLs) for industrially-occupied buildings.
  - Shallow soil gas cleanup levels defined in the ROD (USEPA 2008): 470 micrograms per cubic meter (µg/m^3) of tetrachloroethene, and 1,300 µg/m^3 of trichloroethene.

- Conditions required for substantive compliance with SCAQMD requirements are defined by the Health Risk Assessment (HRA), which is included in **Appendix D** of the OM&M Manual.

- Where, when and how much data should be collected?
  - The locations and frequencies of data collection are presented in **Table 4-1** through **Table 5-2** in the OM&M Manual.

- What are the project decision conditions?
  - If data evaluation confirms that the OU-1 SVE system is operating and performing as intended, the system will continue to operate until the RAOs and cleanup levels specified in the ROD are met.
  - If data evaluation shows the OU-1 SVE system is not meeting the RAOs, not substantively complying with SCAQMD requirement, or is not operating effectively and efficiently, then adjustments will be made to the system to improve it.

The goals of this study are as follows:

1. Assess the effectiveness of the OU-1 SVE system with regard to RAO #1, which is to reduce or eliminate the vapor intrusion risk associated with VOCs in OU-1 contaminated soils.
2. Assess the effectiveness of the OU-1 SVE system with regard to RAO #2, which is to reduce or eliminate risk associated with direct exposure to, contact with, and/or ingestion of OU-1 contaminated soils.
3. Assess the effectiveness of the OU-1 SVE system with regard to RAO #3, which is to reduce or eliminate contaminant migration to groundwater to levels that protect the groundwater resource.
4. Assess the substantive compliance of the OU-1 SVE system with SCAQMD regulations.
5. Assess the effectiveness and efficiency of the OU-1 SVE system operations.

Step 3: Identify the Information Inputs

The purpose of this step is to identify the information and measurements needed to support the decision statement.

Information inputs are as follows for each of the previously discussed problems and goals:

1. Assess the effectiveness of the OU-1 SVE system with regard to RAO #1, which is to reduce or eliminate the vapor intrusion risk associated with VOCs in OU-1 contaminated soils.
   a. Performance monitoring data; Indoor air VOC concentrations.

2. Assess the effectiveness of the OU-1 SVE system with regard to RAO #2, which is to reduce or eliminate risk associated with direct exposure to, contact with, and/or ingestion of OU-1 contaminated soils.

    a. Performance monitoring data: soil vapor VOC concentrations from samples collected at VMPs.

3. Assess the effectiveness of the OU-1 SVE system with regard to RAO #3, which is to reduce or eliminate contaminant migration to groundwater to levels that protect the groundwater resource.

    a. Performance monitoring data: soil vapor VOC concentrations from samples collected at VMPs.

4. Assess the substantive compliance of the OU-1 SVE system with SCAQMD regulations.

    a. Operational monitoring data: process and treatment system effluent VOC concentrations (via analytical sampling and field instruments), temperature data, and flow data.

5. Assess the effectiveness and efficiency of the OU-1 SVE system operations.

    a. Operational monitoring data: soil vacuum levels, system operational runtime data, and VOC concentrations (via analytical sampling and field instruments) and flow rate, vacuum, pressure, temperature, and relative humidity measurements from the VEWs, DPE wells, and various locations in the treatment plant.

Step 4: Define the Boundaries of the Study

This step defines the time periods and spatial area to which decisions will apply.

1. Assess the effectiveness of the OU-1 SVE system with regard to RAO #1, which is to reduce or eliminate the vapor intrusion risk associated with VOCs in OU-1 contaminated soils.

    a. Spatial: Buildings located within OU-1.

    b. Temporal: Semi-annually / Quarterly.

2. Assess the effectiveness of the OU-1 SVE system with regard to RAO #2, which is to reduce or eliminate risk associated with direct exposure to, contact with, and/or ingestion of OU-1 contaminated soils.

    a. Spatial: OU-1 above 30 ft below ground surface (bgs).

    b. Temporal: Annually/ Semi-annually.

3. Assess the effectiveness of the OU-1 SVE system with regard to RAO #3, which is to reduce or eliminate contaminant migration to groundwater to levels that protect the groundwater resource.

    a. Spatial: OU-1 below 30 ft bgs.

    b. Temporal: Annually/ Semi-annually.

4. Assess the substantive compliance of the OU-1 SVE system with SCAQMD regulations.

    a. Boundary: OU-1 SVE treatment system.

    b. Temporal: Monthly/ Weekly/ Continuously.

5. Assess the effectiveness and efficiency of the OU-1 SVE system operations.

    a. Boundary: OU-1 SVE system.

    b. Temporal: Annually/ Quarterly/ Monthly/ Weekly/ Continuously.

Step 5: Develop the Analytic Approach

The purpose of this step is to define the parameters of interest, analytical methods, and sampling frequency.

1. Assess the effectiveness of the OU-1 SVE system with regard to RAO #1, which is to reduce or eliminate the vapor intrusion risk associated with VOCs in OU-1 contaminated soils.

    a. Graphs of VOCs will be created to determine the decrease or increase of concentrations in indoor air, and to compare the concentrations of specific VOCs to their respective RSL.

    b. Indoor and ambient air quality will be compared to evaluate potential contributions from ambient air.

    c. Data will be summarized in tables.

2. Assess the effectiveness of the OU-1 SVE system with regard to RAO #2, which is to reduce or eliminate risk associated with direct exposure to, contact with, and/or ingestion of OU-1 contaminated soils.

    a. Graphs of VOCs will be created to determine the decrease or increase of concentrations in VMPs, and to compare the concentrations of specific VOCs to their respective cleanup levels from the ROD.

    b. Data will be summarized in tables.

3. Assess the effectiveness of the OU-1 SVE system with regard to RAO #3, which is to reduce or eliminate contaminant migration to groundwater to levels that protect the groundwater resource.

a. Graphs of VOCs will be created to determine the decrease or increase of concentrations in VMPs, and to evaluate mass removal from the deep vadose zone.

b. Data will be summarized in tables.

4. Assess the substantive compliance of the OU-1 SVE system with SCAQMD regulations.

   a. Treatment system operational monitoring data will be compared to the conditions for substantive compliance listed in the HRA (OM&M Manual **Appendix D**).

   b. Data will be summarized in tables.

5. Assess the effectiveness and efficiency of the OU-1 SVE system operations.

   a. Operational data will be evaluated and compared to previous operational data, expected operating conditions, and equipment manufacturer recommendations to determine the need for operational adjustments, equipment maintenance, and system optimizations.

   b. VEW and DPE well flowrates and concentrations will be used to estimate mass removal from the subsurface, and the need for adjustments to specific VEWs and DPE wells.

   c. Subsurface vacuums measured at VMPs will be used to assess the distribution of vacuum in the subsurface, relative to the distribution of VOCs, and the need for adjustments to specific VEWs and DPE wells.

   d. Data will be summarized in tables.

Step 6: Specify Performance or Acceptance Criteria

The data acceptance criteria are as follows:

- Samples will be analyzed following USEPA-approved methods and procedures. Laboratory analytical reporting limits (RLs), method detection limits (MDLs) and QC requirements are provided in **Table G-2-1** and **Table G-2-2**, respectively.
- Minimum laboratory QC requirements are presented in **Table G-2-3**. All analytical data will be validated by the QA Manager as described in Section G.5.
- Validated data will be evaluated for precision, accuracy, representativeness, completeness, comparability, and sensitivity (PARCCS) data quality indicators for usability to meet project goals, as described in Section G.2.6.
- Validated data will be evaluated for PARCCS data quality indicators for usability to meet project goals:
  - Appropriate field procedures were followed;

- Deviations were documented and assessed;
- The chemistry data met applicable criteria; and
- All data and field measurements are usable for the stated project needs.

Once data are accepted as usable, the data will be compared to performance criteria as follows:

- Indoor air quality data will be compared to RSLs to evaluate performance relative to RAO #1.
- Shallow (above 30 ft bgs) soil vapor VOC concentrations from VMPs will be compared against the cleanup levels specified in the ROD to evaluate performance relative to RAO #2.
- Deep (below 30 ft bgs) soil vapor VOC concentrations from VMPs will be compared to previous concentrations to evaluate performance relative to RAO #3.
- Flow rates, temperatures, and VOC concentrations measured from the GAC influent, midpoint, and effluent sample ports will be evaluated using the conditions in the HRA to evaluate substantive compliance per the HRA (OM&M Manual **Appendix D**).
- Operational data will be evaluated and compared to previous operational data, expected operating conditions, and equipment manufacturer recommendations to determine the need for operational adjustments, equipment maintenance, and system optimizations.

Step 7: Develop the Plan for Obtaining Data

The plan for obtaining data is as follows:

- Performance monitoring data collection:
  - Collect and analyze indoor and ambient air quality samples from occupied buildings located within the OU-1 boundary (OM&M Manual **Table 4-1)**.
  - Collect and analyze analytical soil gas data from VMPs (OM&M Manual **Table 4-2**).
- Operational monitoring data collection:
  - Determine the percent runtime for the system (OM&M Manual **Table 5-1**).
  - Collect and analyze vapor samples for VOCs from GAC influent, midpoint and effluent sample ports at the treatment plant, using both a field photoionization detector (PID) and laboratory analysis (OM&M Manual **Table 5-1**).
  - Collect vacuum, pressure, flow rate, temperature, relative humidity, and total VOC concentration measurements using field instruments (OM&M Manual **Table 5-1**).
  - Measure the vacuum at VMPs (OM&M Manual **Table 4-2**) and VEWs and DPE wells (OM&M Manual **Table 5-2**).

- Measure the flow rate and vacuum at VEWs and DPE wells (OM&M Manual **Table 5-2**).
- Collect and analyze vapor samples for VOCs from VEWs and DPE wells using PID and laboratory analysis (OM&M Manual **Table 5-2**).

A complete list of the sampling procedures, sample locations, matrices, analysis, method, and frequency of sampling requirements is presented in Section G.3. A complete listing of analytes is provided in **Table G-2-1**.

G.2.6 Data Measurement Objectives

Every reasonable attempt will be made to obtain a complete set of usable field measurements and analytical data. If a measurement cannot be obtained, or is unusable for any reason, the effect of the missing or invalid data will be evaluated. In order to determine data usability, data parameters consisting of PARCCS will be evaluated as described below.

PARCCS Parameters

PARCCS parameters are indicators of data quality. PARCCS goals are established to aid in assessing data quality. The following paragraphs define these PARCCS parameters in conjunction with this project.

Precision. The precision of a measurement is an expression of mutual agreement among individual measurements of the same property taken under prescribed similar conditions. Precision is quantitative and most often expressed in terms of relative percent difference (RPD).

Precision of the laboratory analysis will be assessed by comparing original and duplicate results. The RPD will be calculated for each pair of applicable duplicate analyses using the following equation:

$$Relative\ Percent\ Difference\ (RPD) = \frac{|S - D|}{\frac{(S + D)}{2}} \times 100$$

Where:

S = First sample value (original value)
D= Second sample value (duplicate value)

Precision of reported results is a function of inherent field-related variability plus laboratory analytical variability depending on the type of QC samples. Various measures of precision exist depending upon “prescribed similar conditions." Field duplicate samples will be collected to provide a measure of the contribution to overall variability of field-related sources. The contribution of laboratory-related sources to overall variability will be measured through the analysis of laboratory duplicates. The acceptable RPD limits for field and laboratory duplicate measurements are plus or minus ± 25 percent for air samples for original and duplicate air sample values greater than or equal to five times the RL. An absolute difference of ± the RL will be

used if either the sample or duplicate value is less than five times the RL. **Table G-2-3** presents the RPD criteria for laboratory control sample (LCS) duplicate results.

Accuracy. Accuracy is the degree of agreement of a measurement with an accepted reference or true value and is a measure of the bias in a system. Accuracy is quantitative and usually expressed as the percent recovery (%R) of a sample result. The %R is calculated as follows:

$$Percent\ Recovery\ (\%R) = \frac{SSR - SR}{SA} \times 100$$

Where:

SSR = Spiked Sample Result
SR = Sample Result
SA = Spike Added

Air data will be evaluated for accuracy using LCSs and surrogates. Percent recovery criteria for LCS and surrogates are presented in **Table G-2-4**.

Representativeness. Representativeness expresses the degree to which sample data accurately and precisely represent the following:

- The characteristic being measured;
- Parameter variations at a sampling point; and
- An environmental condition.

Representativeness is a qualitative and quantitative parameter that is most concerned with the proper design of the sample plan and the absence of cross-contamination of samples. Acceptable representativeness will be achieved through 1) careful, informed selection of sampling sites, 2) selection of testing parameters and methods that adequately define and characterize the extent of possible contamination and meet the required parameter RL, 3) proper gathering and handling of samples to avoid interferences and prevent contamination and loss, and 4) collection of a sufficient number of samples to allow characterization. Representativeness is a consideration that will be employed during all sample location and collection efforts. The representativeness will be assessed qualitatively by reviewing the procedures and design of the sampling event and quantitatively by reviewing the blank samples following applicable validation guidelines.

Completeness. Completeness is a measure of the amount of usable data obtained from a measurement system compared to the amount that was expected to be obtained. Usability will be determined by evaluation of the PARCCS parameters excluding completeness. Those data that are validated and need no qualification or are qualified as estimated or undetected are considered usable. Rejected data are not considered usable. Completeness will be calculated following data evaluation. A completeness goal of 90 percent is projected. If this goal is not met, additional sampling may be necessary to adequately achieve project objectives. Completeness is calculated using the following equation:

$$\%\ Completeness = \frac{DO}{DP} \times 100$$

Where:

DO = Data obtained and usable
DP = Data planned to be obtained

Comparability. Comparability is a qualitative parameter. Consistency in the acquisition, handling, and analysis of samples is necessary for comparing results. Data developed under this investigation will be collected and analyzed using standard USEPA or nationally recognized analytical methods and QC procedures to achieve comparability of results with other analyses performed in a similar manner. Data resulting from this sampling effort may be compared to other data sets.

Sensitivity. Sensitivity is the achievement of MDLs and depends on instrument sensitivity and matrix effects. Therefore, it is important to monitor the sensitivity of data-gathering instruments to confirm that data quality is met through constant instrument performance. Instrument sensitivity will be monitored through the analysis of blanks. RLs for VOCs analyzed by Method TO-15 is presented in **Table G-2-1**.

G.2.7 Documentation and Records

OPOG will continue to prepare and submit to USEPA the Quarterly Performance Evaluation Report[3]. If OPOG collects additional data from OU-1 not specified herein, all such data will also be provided as part of the ongoing quarterly project reporting.

During the operation of the full-scale remedy, a large amount of data will be generated from performing the tasks and activities described in previous sections. For necessary field data, data will be documented on the field forms found in **Appendix F** of the OM&M Manual. Most data, including analytical records, are maintained electronically on the Project Portal by the QA Manager. In addition to maintaining the required paper copies, all hard copies of forms and documents will be scanned and uploaded to the Project Portal on a periodic basis.

Records of Manifest and Chemical Quantities must be kept onsite in accordance with the Los Angeles County Fire Department requirements.

[3] Prior to the certification of the OU-1 SVE system by USEPA, quarterly reports were called Preliminary Operations Status Reports.

Table G-2-1: Project and Laboratory Concentration Limits

Method TO-15 Volatile Organic Analytes[1]	CAS No.	Project Quantitation Limit (ug/m^3)	Eurofins Limits (ug/m^3)		Test America Limits (ug/m^3)	
			RL	MDL	RL	MDL
1,1,1-Trichloroethane	71-55-6	4,523	2.73	0.27	0.11	0.03
1,1,2-Trichloroethane	79-00-5	0.77	2.73	0.38	0.27	0.03
1,1-Dichloroethane	75-34-3	7.7	2.02	0.24	0.08	0.02
1,1-Dichloroethene	75-35-4	158	1.57	0.22	0.06	0.02
1,2-Dichloroethane	107-06-2	0.47	2.02	0.20	0.08	0.02
1,2-Dichloroethene	156-59-2	-	1.98	0.24	0.08	0.02
1,4-Dioxane	123-91-1	2.5	7.21	0.76	2.88	0.36
Methyl Ethyl Ketone	78-93-3	37,999	5.90	0.68	0.59	0.05
Isopropyl Alcohol (isopropanol)	67-63-0	68	4.92	0.32	0.10	0.02
Benzene	71-43-2	1.6	1.60	0.16	0.06	0.03
Carbon Disulfide	75-15-0	114,276	6.23	0.40	2.49	0.24
Carbon Tetrachloride	56-23-5	2	3.15	0.19	0.06	0.03
Chloroform	67-66-3	0.53	2.44	0.24	0.10	0.02
Dichlorodifluoromethane (Freon 12)	75-71-8	11	2.47	0.20	0.10	0.02
Hexane (N-HEXANE)	110-54-3	1	1.76	0.18	0.14	0.04
Methylene Chloride	75-09-2	104	17.37	0.66	0.69	0.35
o-Xylene	95-47-6	881	2.17	0.09	0.09	0.04
m/p-xylene	179601-23-1	208	2.17	0.22	0.17	0.09
Styrene	100-42-5	2,390	2.13	0.21	1.70	0.25
Tetrachloroethene	127-18-4	47	3.39	0.27	0.14	0.07
Toluene	108-88-3	627	1.88	0.11	0.08	0.04
Trichloroethene	79-01-6	3	2.69	0.43	0.11	0.03

Notes:

[1] This is not a complete list of all analytes included in Method TO-15. This list presents all analytes for which the OU-1 Remedy has performance criteria.

CAS = Chemical Abstracts Service

MDL = method detection limit

NA = not applicable

RL = reporting limit

TO-15 = USEPA analytical method for toxic organics

ug/m3 =micrograms per cubic meter

USEPA - United States Environmental Protection Agency

Table G-2-2: Laboratory Data Deliverable Requirements

A list of the minimum information that is required to be included in the Stage 4 laboratory analysis data report is provided below. Reporting requirements include a sample report, quality control results, and instrument performance results.

Each analytical set (20 or fewer samples) will be compiled into a data package that contains the following elements:

1. Case Narrative which includes an explanation of difficulties encountered, potential effect on the data and/or corrective action taken.
2. Chain-of-custody documentation (location, date and time of sample collection)
3. An analysis results page for each sample which contains:
    - Unique Report Identifier
    - Laboratory Name, Address and Phone Number
    - Client Name
    - Project Name
    - Client Sample Identifier
    - Laboratory Sample Number
    - Date Sample was Collected
    - Date Laboratory Received the Sample
    - Analysis Method Number
    - Date of Successful Analysis
    - Dilution Factor
    - Concentration Units
    - Reporting Limit for Each Analyte
    - Concentration of Each Target Analyte in the Sample
    - Data Qualifiers (when applicable)
    - Percent Recovery of Each Surrogate Compound Spiked into the Sample

4. Quality Control Results
    - Blank Results (method, initial and continuing calibration), including documentation of detection limits.
    - Laboratory Control Sample Results (including analyte, percent recovery, percent difference [if applicable] and acceptance criteria)
    - Duplicate Results (laboratory duplicates), including sample ID, analyte, original and duplicate sample concentrations, relative percent difference and acceptance limits.
    - Instrument Tuning Results
    - Initial Calibration Report, including percent relative standard deviations s and relative response factors
    - Continuing Calibration Report, including percent differences and relative response factors
    - Internal Standard Results
    - Standard and Sample Preparation Logs
5. Electronic Deliverables
6. Laboratory Raw Data from Instruments and Bench Records. Mass spectral data must be reported. Ion ratio and acceptance windows are to be reported when analyzed using SIM.

Table G-2-3: Minimum Laboratory QC Requirements for TO-15 Analytical Method Using GC/MS

Method Procedure/QC Sample/Standard	Frequency of Procedure/Number of QC Samples Required/Number of Standards Required	Acceptance Criteria	Corrective Action[1]
Instrument Performance Check	Analyzed initially and once per 24-hour time period of operation	Meets the mass spectral ion abundance method criteria	Inspect system; correct problem; re-run standard and affected samples
Initial Calibration	After instrument setup	Number of standards: 5; %RSD for all calibration analytes ≤ 30%, with 10 percent of the compounds allowed out to 40%; relative response factors within method criteria	Correct problem then repeat initial calibration.
Continuing Calibration	Daily, before sample analysis and every 12 hours	%D for all calibration analytes < 30%; relative response factors within method criteria	Re-calibrate and rerun all samples analyzed after last valid continuing calibration
Method Blank	Analyzed after the calibration standard and before samples are analyzed - Once every 24 hours	<RL	Correct problem then re-prepare and analyze method blank and all samples processed with the contaminated blank.
LCS	1/20 samples	Refer to **Table G-2-4** for control limits	Correct problem then reanalyze. If still out, re-prepare and reanalyze the LCS and all samples in the affected analytical batch.
LCS Duplicate	1/20 samples	Refer to **Table G-2-4** for control limits	Flag data that exceed RPD criteria.
Quality Control Standard (if applicable)	MDL Study- Yearly	Detection limits established shall be > ½ the RLs	None
Surrogates	Add surrogates to every sample analyzed	Refer to **Table G-2-4** for specific analytes and control limits	Reanalyze sample; if still out of criteria, flag data that exceeds criteria.
Internal Standards (ISs)	Added to applicable laboratory QC and samples	Retention time varies ≤20 seconds; internal area standard response 60 to 140%	*For blanks:* inspect the system and re-analyze the blank. *For samples:* re-analyze the sample. If the ISs are within limits in the re-analysis, report the second analysis. If the ISs are out-of-limits a second time, dilute the sample until ISs are within acceptance limits and narrate.

Notes:

[1] Laboratory must perform corrective action for any method-required QC element that is not within criteria specified in this table or the analytical method, in accordance with individual methods, and as directed in the laboratory's internal standard operating procedures.

%D - percent difference
%RSD - percent relative standard deviations
GC/MS - gas chromatograph / mass spectrometry
IS - internal standard
LCS - laboratory control sample
MDL = method detection limit
MS - mass spectrometry
NA - not applicable
QC - quality control
RL - reporting limit
RPD - relative percent difference
TO-15 - Toxic Organics-15 (USEPA analytical method)
USEPA - United States Environmental Protection Agency

Table G-2-4: Surrogate and Laboratory Control Sample Quality Control Limits

Analyte		Percent Recovery (%)	Relative Percent Difference (%)
Surrogate	1,2-Dichloroethane-d4	70-130	Not applicable
	Toluene-d8	70-130	
	4-Bromofluorobenzene	70-130	
Laboratory Control Sample	Carbon Tetrachloride	60-140	20
	All other analytes listed in **Table G-2-1**	70-130	

Section G.3

Data Generation and Acquisition

The following sections provide information regarding the monitoring activities which are performed during the operation OU-1 SVE system.

G.3.1 Sampling Process Design

The objective of the sampling program is to verify that the OU-1 SVE system is operating as intended and the remedy is performing in alignment with the DQOs, as described in Section G.2.5.

G.3.1.1 Sampling Locations

The following sections discuss each type of sampling location.

G.3.1.1.1 Performance Sampling Locations

Section 4.2 in the OM&M Manual details all indoor air sampling locations, procedures, and frequencies. Section 4.3 provides the same information for VMP performance sampling.

G.3.1.1.2 Operational Sampling Locations

Section 5.1 in the OM&M Manual presents the specific monitoring locations, procedures, and frequencies for the monitoring required by the HRA for SCAQMD substantive compliance. Section 5.2 provides the same information for operational monitoring conducted at VEWs and DPE wells, and Section 5.3 describes the monitoring conducted of treatment system equipment.

G.3.2 Sampling Methods and Procedures

Sampling procedures for collecting a vapor sample using a summa canister and for performing field vapor monitoring using a PID with a Tedlar® bag are presented as standard operating procedures (SOPs) in **Appendix B** of the OM&M Manual.

See **Table G-3-1** for applicable SOPs for the assigned monitoring procedures.

Sampling procedures for temperature readings are as follows:

Temperature Reading Procedures:

- Insert a thermometer or other kind of temperature-measuring device into the 1/4-inch diameter flow monitoring port on the manifold.
- Observe the readout, in degrees Fahrenheit (deg F).
- Record the information on the appropriate field form.

Procedures for collecting the flow readings are described below.

Flow reading Procedures:

- Insert a handheld thermo-anemometer (or other kind of approved field meter) into the 1/4-inch diameter flow monitoring port.
- Obtain a readout in ft per minute in actual condition.
- The operator can enter the pipe diameter information into the meter to obtain the flow rate in actual cubic feet per minute (ACFM). For conversion of ACFM to standard cubic feet per minute (SCFM), see below:

Flow units will be converted from ACFM and expressed in SCFM. The formula for conversion is as follows:

$$SCFM = \frac{ACFM}{\left\{\left(\frac{P_S - (RH_S \cdot PV_S)}{P_b - (RH_a \cdot PV_a)}\right)\left(\frac{T_a}{T_s}\right)\left(\frac{P_s}{P_a}\right)\right\}}$$

where:

ACFM = flow rate in actual cubic feet per minute
SCFM = flow rate in standard cubic feet per minute
P_s = standard absolute air pressure (pounds per square inch absolute [psia]) = 14.696 psia (this is a constant value)
P_a = actual absolute pressure in psia
PV_s = Saturated vapor pressure of water at standard temperature in pounds per square inch (psi)
PV_a = Saturated vapor pressure of water at actual temperature in psi
RH_s = standard relative humidity
RH_a = actual relative humidity
T_a = actual ambient air temperature (degrees Rankine [deg R])
T_s = standard temperature (deg R) = 528 deg R

Alternatively, if the meter used automatically converts and provides a measurement in terms of SCFM without conversion from ACFM, that is acceptable also.

However, since the effect of relative humidity is relatively small compared to the effects of pressure and temperature, this calculation may be simplified into the following:

$$SCFM = \frac{ACFM}{\left\{\left(\frac{T_a}{T_s}\right)\left(\frac{P_s}{P_a}\right)\right\}}$$

For example, given a flow rate of 600 ACFM, an actual ambient air temperature of 80 deg F (540 deg R), and a vacuum of 15 inches of mercury (which translates to an actual absolute pressure of 7.212 psia), the rest of the required parameters for ACFM to SCFM conversion may be determined using known values and standard tables. In this case, the standard air pressure is

14.696 psia and the standard temperature is 528 deg R. The conversion may be calculated as follows:

$$\frac{600\ ACFM}{\left\{\left(\frac{540°R}{528°R}\right)\left(\frac{14.696\ PSIA}{7.212\ PSIA}\right)\right\}} = 290\ SCFM$$

The information will be recorded on the appropriate field form.

G.3.2.1 Sampling Equipment and Preparation

Field preparatory activities include review of the Health and Safety Plan included in **Appendix A** of the OM&M Manual and this SAP, procurement of field equipment, laboratory scheduling, confirmation of site access, and completion of a field planning meeting that includes field personnel and QA staff.

G.3.2.2.1 Equipment testing, inspection and maintenance

Field equipment used for vapor sample collection includes a PID, purge pump (also referred to as a "lung box") and sampling manifold assembly. All equipment must be checked prior to use to confirm the equipment is functioning as intended.

The PID should be visually inspected quarterly and, if a component of the equipment is malfunctioning or in need of replacement, field staff should refer to the manufacturer's documentation located in **Appendix E** of the OM&M Manual for instructions on possible corrective actions. Prior to each use of the purge pump, samplers should inspect it visually, verify that it is operating correctly, and, in the event of its disrepair, seek assistance from the OM&M Contractor.

A sampling manifold assembly is typically rented for temporary use during monitoring events. Such equipment is offered by various companies which are responsible for the proper maintenance and, where applicable, calibration of the equipment's components. During each monitoring event, field staff conduct leak and shut-in tests to verify that the sampling manifold assembly is able to maintain an air-tight connection with the sample collection port so as not to introduce ambient air to the sample and bias the results. Procedures for leak and shut-in tests (including the required frequency of the testing) are presented in SOP 107, located in **Appendix B** of the OM&M Manual. In the event that the sampling manifold assembly is not operating as intended, field staff should contact the rental company for instructions to resolve the issue.

G.3.2.2.2 Equipment Calibration and Frequency

The PID should be calibrated prior to field measurement collection to confirm the accuracy of the measuring devices. Procedures for calibrating the PID are presented in SOP 370, found in **Appendix B** of the OM&M Manual. Records of calibration results should be documented on the "Equipment Calibration Log" found in **Appendix F** of the OM&M Manual. Calibration records will be filed and maintained in the project trailer.

G.3.2.2.3 Equipment Decontamination

Decontamination of field equipment is not necessary for the sampling described in this SAP. All sampling equipment that is employed for the collection of samples from multiple locations is not at risk of cross-contamination as long as the purging requirements described in SOP 104 are followed.

G.3.2.2 Sample Containers and Collection

All samples collected for field readings, including analysis for VOCs by PID, will be collected using an unpreserved Tedlar® bag which may be purchased or supplied from a laboratory or equipment vendor.

Samples collected for laboratory analysis for VOCs will be collected using a summa canister from soil gas, indoor air, and ambient air monitoring locations. All samples will be collected according to the methods presented in SOP 104 Vapor Sampling (**Appendix B** of the OM&M Manual) and USEPA SOP1704 Summa Cannister Sampling (USEPA 1995). All summa canisters will meet the following criteria:

- Capacity:
  - For soil gas samples: 1-Liter (L).
  - For indoor and ambient air samples: 6-L.
- Vacuum[4]:
  - Initial: 30 inches of mercury.
  - Final: less than 17 inches of mercury (*5 inches of mercury preferred*).

G.3.3 Sample Handling and Custody

G.3.3.1 Sample Labeling

Each collected sample and field QC sample, including duplicates, will have a completely filled-in sample label securely attached to it prior to filling the sample container. All field QC samples will be shipped "blind" (i.e., the sample is not identified as a QC sample) to the laboratory, but will be assigned a unique identification code, discussed below, to facilitate identification of the laboratory results.

A coding system will be used to identify each sample collected during this investigation. The coding system will allow tracking and retrieval of information concerning a particular sample and will assure that each sample is uniquely identified. Each sample will be identified by site, type of sampling event, sampling location, and date. The coding system is as follows:

---

[4] Required initial and final summa canister vacuums are subject to the laboratory contracted and the analyses performed. The specifications presented here are approximate, assume Method TO-15, and are based on Test America/Eurofins' requirement for a minimum differential vacuum (pre-/post-sampling) of 13 inches of mercury.

The first set of alphabetic symbols will be “OC”, representing the Omega Chemical Superfund Site. The second set of alphabetic symbols identifies the type of sampling event, with “SVE” identifying the event as Soil Vapor Extraction.

The third set of numeric symbols identifies the sample location, for example “VE9S” will represent VEW VE-9S and “INF-GAC” will represent the influent prior to the first GAC vessel. The prefix “SP-“refers to the sampling ports where each sample will be collected; however, this prefix will not be included in the sample location ID, and thus will not be recorded as part of the unique sample ID on the chain of custody (COC).

The last set of numeric symbols represents the date. The identifier “K” will be added after the date to denote a sample as a duplicate to be analyzed for QA/QC. The letter and number combination “K2” is added as a suffix to sample identification codes to denote a split sample, to be analyzed for QA/QC. Typical sample numbers will be as shown below:

Table G-3-2 lists the sample location, sample port and a sample location code and an example sample identification number for each type of OU-1 SVE system sample.

G.3.3.2 Sample Packaging and Shipment

All filled summa containers will be labeled, packed and delivered to the laboratory by courier. All samples will be shipped by common carrier to the laboratory the next working day following sample collection. Field staff will notify the laboratory of impending sample delivery the day the samples are shipped. Sample holding times shall not exceed 14 days.

G.3.3.3 Field Sample Custody and Documentation

The purpose of COC procedures is to record sample specific information in a comprehensive and consistent manner and identify who has handled the sample. COC records trace a sample from its collection through all transfers of custody until it is transferred to the analytical laboratory. Custody records will be used for the samples collected during operation of the OU-1 SVE system.

The OM&M Contractor shall have overall responsibility for sample custody and for field document control during OU-1 SVE system operation. Field staff will confirm that the samplers have the appropriate identification and custody records, will resolve custody problems in the field, and will handle the shipment of samples to the analytical laboratories. A sample is under custody if one or more of the following criteria is met:

- The sample is in the custodian's (sampler, lab personnel, etc.) possession;
- It is in the custodian's view after being in possession;
- It was in the custodian's possession and was locked up to prevent tampering; and
- It is in a designated secure area.

The field staff will complete a multi-part carbonless copy COC record to accompany each sample shipment from the field to the laboratory. If necessary, more than one custody record sheet may be used for one package.

The initiator of the record will keep a copy of the COC record, while the original will travel with the samples. If custody of the samples passes through several people, all people may not have a copy of the custody record. This is acceptable so long as the original custody record shows each person who has received custody has properly relinquished custody.

The following information will be supplied on the COC record:

- Project code number;
- Signature of sampler;
- Sample identification;
- Sample matrix;
- Laboratory QC samples;
- Date and time of sample collection;
- Signatures of all persons receiving or relinquishing the samples;
- Sample analyses required for each sample;
- Preservative(s) used (if any); and
- Number of sample containers.

General use instructions follow:

- The originator fills in all requested information from the sample labels;
- The originator signs in the top left "Relinquished by" box and keeps the copy;
- The original record sheet travels with the samples;
- The person receiving custody checks the sample label information against the custody record. He/She also checks sample condition and notes anything unusual under "Comments" on the custody form; and
- The person receiving custody signs in the adjacent "Received by" box and keeps the original.

In general, the date/time will be the same for the signatures relinquishing and receiving custody since custody must be transferred to another person.

Field duplicate samples, if collected, will be entered onto the sample tracking log as a separate line entry, but will include a notation to indicate which parent sample they duplicate.

A sample COC is provided in **Appendix F** of the OM&M manual.

G.3.3.3.1 Field Logs

Field logs, which will be used to record and document all data collection activities, are presented in **Appendix F**. All measurements and samples collected will be recorded. Any deviations from this SAP will also be noted. Entries will be as descriptive as possible, so that a particular situation can be reconstructed without reliance on the collector's memory. Entries will be made in pen; no erasers will be permitted. If an incorrect entry is made, the data will be crossed out with a single line and dated and initialed. The correct information should be entered in close proximity to the erroneous entry.

At the beginning of each monitoring event, the following information will be recorded:

- Date;
- Time of entry;
- Location;
- Field measurements;
- Weather conditions;
- Field personnel present;
- Level of personal protection being used on-site;
- Deviations (if any) from the planned monitoring;
- Field observations; and
- Signature of the person making entries.

In addition, instrument calibration information (including instrument serial numbers) will be recorded each day they are used. If the same instruments are used for each sampling event, the serial numbers only need to be recorded at the beginning of the sampling event. The date and signature of the person recording entries will be written on every page.

At each station where a sample is collected or a measurement is made, a detailed description of the location of the station, time of sampling, sample description, duplicate samples, and number of samples will be noted.

G.3.3.4 Laboratory Custody Procedures and Documentation

Laboratory custody procedures are provided in the designated laboratory's QA Management Plan. Upon receipt at the laboratory, each sample shipment will be inspected to assess the condition of the shipping container and the individual samples (i.e., measuring the vacuum of each summa canister to verify sample integrity). The condition of the custody seals on a received shipment of samples will be documented at the time of receipt by the laboratory. Any problems identified by this process will also be documented and the sample custodian will be notified by the fastest available means, followed by written notification.

Enclosed COC records will be cross-referenced with all the samples in the shipment; these records will be signed by the sample custodian and copies provided to the QA Manager will be placed in the project files. The laboratory sample custodian will continue the COC process by assigning a unique laboratory number to each sample on receipt; this number identifies the sample through all further handling. It is the laboratory's responsibility to maintain internal logbooks and records throughout sample preparation, analysis, data reporting, and disposal.

G.3.3.5 Correction to and Deviation from Custody Documentation

If a discrepancy between sample label numbers and custody record listings is found, the person receiving custody should document this and properly store the samples. The person receiving custody should then attempt to resolve the problem by checking all available information (other markings on sample container, type of sample, etc.), as well as documenting the situation on the COC record and in the field logs. The samples should not be analyzed until the problem is resolved by contacting the Project Coordinator or QA Manager (as described in Section G.2).

Changes may be written in the "Comments" section of the COC record and should be initialed and dated. A copy of this record should accompany the written notification to the sample custodian. A complete copy of the documentation of the problem and its resolution should also be provided to the QA Manager and included with the project files as well as documented in the laboratory data package.

G.3.4 Analytical Method Requirements

G.3.4.1 Analytical SOP and Requirements

The Laboratory will be certified by National Environmental Laboratory Accreditation Program (NELAP) and will have a documented QA Program that complies with the USEPA guidance document for QAPPs (USEPA 2001). The laboratory will be required to allow access by USEPA's authorized representatives to the laboratory and personnel utilized by the laboratory for analyses.

Vapor samples will be analyzed for the presence of VOCs using USEPA Method TO-15 which utilizes gas chromatograph/mass spectrometry methodology. Holding times for samples contained in summa canisters, to be analyzed for VOCs by Method TO-15, is 30 days. **Table G-2-1** presents project quantification limits, laboratory MDLs, and laboratory RLs.

Each laboratory data package will contain 20 or fewer samples. Laboratory data deliverable requirements are listed in **Table G-2-2**. Some of these requirements include COC documentation, case narrative, analysis results, QC results (method blank, LCSs, etc), additional supporting documentation, initial and continuing calibration reports, internal standard results, preparation logs, mass spectrometer (MS) tuning results, etc. where Selected Ion Monitoring (SIM) analysis is used, the laboratory must provide ion ratio and acceptance windows for all sample detections. The sample results and applicable laboratory QC results for each data package are required to be submitted as electronic data deliverables in the appropriate the QA Manager designated format.

G.3.4.2 Containment and Disposal of Investigation-Derived Waste

Investigation-derived waste (IDW) generated during field activities include used personal protective equipment, debris, and miscellaneous disposable sampling equipment. IDW is not

expected to be hazardous. Used gloves, tyveks, respirator cartridges, disposable filters, and other miscellaneous items will be double-bagged using plastic trash bags and then disposed as nonhazardous solid waste.

G.3.5 Quality Control

The overall QA/QC objective for sampling data is to confirm that the data generated are of documented quality for the intended data uses. To achieve these objectives, data will be: 1) representative of actual chemical conditions; 2) comparable to other studies, where appropriate; 3) complete to the extent that necessary conclusions may be reached; and 4) of known quantity in terms of precision and accuracy, at levels appropriate for the stated use for the project.

G.3.5.1 Field Quality Control Samples

Field QC samples (i.e., field duplicates) will be collected and analyzed to evaluate the quality of the field sampling process. The QC samples that will be used during the field program will consist of duplicate (co-located) samples. Field sampling QC procedures are discussed in the following sections. All field QC check samples will be submitted "blind" to the laboratory.

Field Duplicates

At a minimum, duplicates of vapor monitoring point samples (i.e., co-located samples) will be collected at a rate of 10 percent (1 per 10) of the samples collected. Field duplicate samples will not be collected during operational monitoring of the OU-1 SVE treatment system (i.e. from process samples). Data obtained from field duplicate samples will provide an estimate of measurement error attributable to the data collection process. Duplicate samples will be analyzed for the same parameters as the original sample. For duplicate samples, the identifier “K” will be added at the end of the sample name. Field duplicate samples will be submitted to the laboratory using Summa canisters.

Field Blanks

Equipment blanks and trip blanks will not be collected.

G.3.5.2 Laboratory Quality Control Samples

The laboratory will follow all method-specific QC measures, such as external and internal standard calibration procedures, instrument performance verifications, etc., which are suggested within any referenced method. In addition, the laboratory will be required to submit documentation that all the QC criteria were satisfied. The specific QC requirements referenced in Method TO-15 must be followed; however, the following sections provide a general description of the QC procedures that are typically required. Laboratory QC requirements are presented in **Table G-2-3**.

Purity of Standards, Solvents, and Reagents

All reagents will be of reagent-grade (equivalent) or higher quality whenever obtainable. Organic solvents are to be pesticide-grade or equivalent. Where applicable, reference standard solutions will be traceable to USEPA or the National Institutes of Standards and Technology. Each new lot of reagent-grade chemicals will be tested for quality of performance, and laboratory records will be kept to document the results of lot tests. Alternatively, reagent blanks will be prepared from

each lot. If method blank contamination is found, the reagent blank will be analyzed to evaluate the source of contamination.

Analytical QC Samples

Method Blank

To monitor for possible laboratory contamination, a laboratory method blank is analyzed along with all air samples submitted for analyses. A laboratory method blank is an unused, certified canister that has not left the laboratory. The blank canister is pressurized with humidified, ultra-pure zero air (or nitrogen) and carried through the same analytical procedure as a field sample. The frequency for method blank preparation and analysis is a minimum of 1 per 20 field samples or 1 per analytical batch, whichever is most frequent. An analytical batch is defined as a maximum of 20 samples from one project that are analyzed together with the same method sequence and the same lots of reagents and with the manipulations common to each sample within the same time period or in continuous sequential time periods. At least one laboratory method blank must be analyzed in each 24-hour analytical sequence.

Calibration Standards (Initial Calibration)

The calibration standard is prepared in the laboratory by dissolving a known amount of pure (nominally 100 percent) analyte in an appropriate matrix. The final concentration calculated from the known quantity is the true value of the standard. All calibration standards must be traceable to certified reference materials or certified check standards. The results obtained from these standards are used to generate a standard curve which can be used to quantify the compound in the environmental sample. Five calibration standards and a blank are required when generating a calibration curve for Method TO-15.

Check Standard (Continuing/Daily Calibration)

The check standard is prepared in the same manner as a calibration standard. The final concentration calculated from the known quantity is the true value of the standard. The check standard is not carried through the same process used for the environmental samples as it does not undergo the sample preparation procedure. The check standard result is used to monitor the continuing validity of an existing calibration curve or concentration calibration standard file.

Quality Control Check Samples

The QC check sample is a reference standard acquired from an USEPA-approved source that is analyzed "as is" or diluted according to instructions provided with the reference material, to provide independent verification of instrument calibration. QC check samples for most types of analyses are available from private vendors and will be used at a specified frequency as a means of evaluating the analysis techniques.

QC check samples will be analyzed at the frequency specified in the referenced protocols or at a minimum of each time a new calibration curve is established. Corrective action in the form of re-analysis of all associated samples is required if a QC check sample is outside control limits. The control limits are typically a recovery of ±10 percent of the true value except when the established limits provided by the supplier of the standard reference material are different. Applicable control limits must be provided with the data.

Control Samples

The LCS is a type of QC check sample (i.e., reference standard) that is carried along with the samples through the entire sample preparation/analysis sequence. The frequency for the inclusion of control samples is 1 per 20 or once per day, whichever is more frequent.

Surrogate Spikes
Every sample is spiked before analysis with a surrogate mixture of compounds which are considered to behave similarly during analysis but are not identical to analytes potentially found in naturally-occurring sample matrices. Surrogate requirements and laboratory control limits are presented in **Table G-2-4**.

Laboratory Duplicate Sample
Aliquots (e.g., subsamples) are made in the laboratory of the same sample, and each aliquot is treated exactly the same throughout the analytical method. The RPD between the values of the duplicates, as calculated below, is taken as a measure of the precision (reproducibility) of the analytical method:

$$RPD = \frac{D_1 - D_2}{\left(\frac{D_1 + D_2}{2}\right)} \times 100$$

Where:

RPD = Relative Percent Difference
D_1 = First Sample Value
D_2 = Second sample value (duplicate)

The duplicate is a measure of the precision of the laboratory sampling (i.e., aliquoting) and analysis procedure and of the homogeneity of the sample matrix as provided to the laboratory. Laboratory duplicate requirements are presented in **Table G-2-3**.

Mass Spectrometer Tuning Solution
Proper operating configuration of the instrument and data system is performed using a MS tuning solution. Mass calibration and resolution, and instrument stability are demonstrated using the tuning solution prior to initial calibration. Mass ion abundances must meet the criteria specified in the appropriate methods.

G.3.5.3 Internal Quality Control Checks

Internal QC checks will be conducted throughout the project to evaluate the performance of the project team during data generation. All project deliverables will receive technical and QA reviews prior to being issued. Completed review forms will be maintained in the project files. Corrective action of any noted deficiencies will be the responsibility of the QA Manager.

G.3.6 Laboratory Equipment Management

Calibration of laboratory equipment will be based on written procedures approved by laboratory management. Instruments and equipment will be initially calibrated and continuously calibrated

at required intervals as specified by either the manufacturer or more updated requirements (e.g., methodology requirements). Calibration standards used as reference standards will be traceable to the USEPA, the National Institute of Standards and Technology, or another nationally-recognized reference standard source.

Records of initial calibration, continuing calibration and verification, repair, and replacement will be filed and maintained by each laboratory. Calibration records will be filed and maintained at each laboratory location where the work is performed and may be required to be included in laboratory data packages.

Instrument maintenance logbooks will be maintained in the analytical laboratories at all times. The logbooks should contain a schedule of maintenance, as well as a complete history of past maintenance, both routine and non-routine.

G.3.7 Data Management

The data management requirements as listed herein provide procedures necessary to properly document, track and manage, and store all field and laboratory data generated from OU-1 SVE system monitoring.

G.3.7.1 Analytical Database

The primary objective of developing an analytical database is to provide a detailed record of data collection, analysis, verification and reporting is maintained. In particular, environmental sampling data need to be stored within a medium that allows for accurate and appropriate manipulation for the purposes of handling, evaluation, accessing, and reporting. Management of analytical data is the responsibility of the QA Manager. The QA Manager maintains a web-based project database management system (the Project Portal).

Electronic analytical data is provided by the laboratory so that the data can easily be imported into the project database.

Data appended to the project database will be subjected to a rigorous QC check. The laboratory will be required to submit analytical results in electronic format. Prior to transferring to the database, the electronic data will be reviewed for completeness and formatting and compared against the COC and lab report for accuracy. If any errors are noted, the laboratory will be contacted, and the discrepancy resolved. If required, any corrections will be made to the electronic file before it is appended to the project database.

G.3.7.1.1 Data Inclusions

The types of data to be included in the development and management of the comprehensive database will include vapor data from the treatment plant, VEWs, DPE wells, VMPs. Field measurements will also be recorded and uploaded to the database.

G.3.7.2 Document Storage

The central files for this project will maintained by the Project Coordinator and the QA Manager. All project documents, including field and analytical data, analysis records and supporting documentation, and all draft and final deliverables submitted to USEPA will be kept electronically.

G.3.7.2.1 Laboratory Record Keeping

Copies of all analytical data and/or final reports are retained in the laboratory files. In accordance with the NELAP requirements, laboratories store these analytical data for a minimum of 5 years from the time of initial report generation. Data may be retrieved from archives, upon request, during this 5-year period.

G.3.7.2.2 Electronic Data Files

Electronic data files will be saved in the electronic project directory. Electronic data files are used to update the database as described in Section G.5.1.

G.3.7.3 Non-Direct Measurements

It is not anticipated that non-direct measurements (i.e., historical data or data collected by others) will be utilized in this OU-1 SVE system operation monitoring and sampling program.

USEPA or its oversight subcontractor may collect split samples. However, it is assumed that any USEPA data collected for this project will be validated before they are released to the QA Manager.

Table G-3-1: Applicable SOPs for Monitoring Procedures

Monitoring Type	Monitoring Location	Standard Operating Procedure[1]
Vapor sampling using a summa canister for laboratory analysis	GAC influent/midpoint/effluent locations	SOP 104- Vapor Sample Collection SOP 107- Shut-in and Leak Testing
	VEWs	
	DPE Wells	
	VMPs	
Field Readings Using a Tedlar® Bag for field measurements for:	Treatment System	SOP 104- Vapor Sample Collection SOP 370- PID Calibration
	VEWs	
	DPE Wells	

Notes:

[1] SOPs are included in Appendix B in the OU-1 SVE OM&M Manual

DPE - dual-phase extraction

GAC - granular activated carbon

PID - photoionization detector

SOP - standard operating procedure

VEW- vapor extraction well

VMP - vapor monitoring probe

Table G-3-2: Sample Identification Codes

Vapor Sample Location	Sample Port	Example Sample Identification Number[1]
VEW (Ex. VE-2D)	SP-VE-2D	OC_SVE_VE-2D_091718_K[2]
DPE (Ex. DPE-3)	SP-DPE-3	OC_SVE_DPE-3_091718_K2[3]
VMP (Ex. VMP-11, at 10-ft bgs)	-	OC_SVE_VMP-11-10_091718
IAQ	-	IAQ_B3_091718
GAC Influent	SP-INF-GAC	OC_SVE_INF_GAC_091718
GAC Midpoint	SP-MID-GAC	OC_SVE_MID_GAC_091718
GAC Effluent	SP-EFF-GAC	OC_SVE_EFF_GAC_091718

Notes:

[1] Example sample identifications numbers assume samples were collected on September 17, 2018, represented as 2 digits for each month, day and, year: "091718."

[2] The letter "K" is added to sample identification codes to denote a sample as a duplicate to be analyzed for QA/QC.

[3] The suffix "K2" is added to sample identification codes to denote a sample as a split to be analyzed for QA/QC.

DPE = dual phase extraction (well)

Ex. = example

ft bgs = feet below ground surface

GAC = granular activated carbon (vessel)

IAQ = Indoor Air Quality (monitoring location)

OC = (Former) Omega Chemical

QA/QC = Quality Assurance / Quality Control

SP = sample port

VE = vapor extraction

VEW = vapor extraction well

VMP = vapor monitoring probe

Section G.4

Assessment and Oversight

G.4.1 Assessments and Response Actions

An important part of a QA program is a well-defined, effective policy for correcting problems. The QA program operates to prevent problems, but it also serves to identify and correct those that exist. Usually these problems require either on the spot, immediate corrective action or long-term corrective action.

The corrective action system used during the field activities is designed to quickly identify problems and solve them efficiently. The QA Manager is responsible for the direction of this system and receives full support from management for its implementation. The essential steps are as follows:

- Identify and define the problem;
- Assign responsibility for investigating the problem;
- Determine a corrective action to eliminate the problem;
- Assign and accept responsibility for implementing the corrective action;
- Implement the corrective action;
- Verify that the corrective action has eliminated the problem; and
- Document the problem identified, the corrective action taken and its effectiveness in eliminating the problem.

Corrective action procedures which will be used to resolve deficiencies found during routine activities or QA audits of field, laboratory or office activities will be as described in the following section.

Corrective Action Resulting from Routine Activities

Deficiencies found during normal routine activities will be resolved by implementing corrective action as part of normal operating procedures by staff. Corrective actions of this type will be noted in the field or laboratory logbook; no other formal documentation is necessary unless further corrective action is required. If normal procedures do not solve the problem, the staff will document the problem in a formal memorandum addressed to the Project Coordinator and copied to the project file.

Corrective Action Resulting from QA Audits

Deficiencies encountered during a QA audit will be corrected as soon as possible. The QA Manager, with the Project Coordinator, is responsible for completion of appropriate corrective action. The procedures used to expedite corrective action will be:

- Auditor verbally notifies the QA Manager and field personnel immediately during audits of deficiencies found;
- QA Manager institutes corrective action as soon as possible; and
- QA Manager distributes the audit report promptly.

G.4.2 Reporting

All project staff will be responsible for maintaining communication with the QA Manager and for identifying any issues that may affect the usability of the data and the decisions that are based on the data. Project management will be kept informed through daily verbal and/or written communication. The QA Manager will monitor laboratory performance and compliance with QA requirements. The laboratory will be subject to an on-site audit if necessary. Results of such audits will be documented and placed in the project files.

Section G.5

Data Validation and Usability

The following sections discuss the overall verification and validation process that will be implemented for data generated during operation of the OU-1 SVE system.

G.5.1 Data Review, Verification, and Validation

The verification process involves the evaluation of the data with respect to sample results and data package completeness, reporting requirements, compliance with procedures and project requirements, whereas the data validation process involves the evaluation of the technical usability of the data. The results of the data validation will determine the level of uncertainty associated with the analytical results to be used in the decision-making process. Reduction of laboratory measurements and laboratory reporting of analytical parameters will be in accordance with the procedures specified in the analytical method (i.e., perform laboratory calculations in accordance with the method-specific procedure) and laboratory SOPs.

Data validation will be conducted in accordance with the analytical method and the QA Managers' Standard Operating Procedure 'ECS SOP-001 Revision, Validation of Volatile Organics in Air Samples by Method TO-15 and TO-17'. USEPA National Functional Guidelines for Organic Superfund Methods Data Review (USEPA 2017) may be consulted. Best professional judgment will be applied as necessary and appropriate. All method deviations and reporting or calculation variances will be fully documented by the project laboratory. Technical personnel directed by the QA Manager qualified in data validation procedures and not associated with the sampling activities will be responsible for data verification and validation to the extent outlined in **Table G-5-1**.

G.5.2 Validation and Verification Methods

Data validation/verification will be performed at varying degrees depending on the type of data being collected and its use for project decisions. A Level 4 data package (similar to those which are provided by the USEPA Contract Laboratory Program) will be requested for all sample results to enable data validators to provide the proper stage of validation, including a more in-depth review in the event that QC requirements are not satisfied.

The industry standard guideline, USEPA *Guidance for Labeling Externally Validated Laboratory Analytical Data for Superfund Use* describes the levels of standard validation/verification (USEPA 2009):

Stage 1 Validation/Verification:	Verification and validation based only on completeness and compliance of sample receipt condition checks.
Stage 2A Validation/Verification:	Verification and validation based on completeness and compliance checks of sample receipt conditions and only sample-related QC results (e.g., method blanks, surrogates,

	LCSs, duplicates, internal standards, holding times, frequency of QC samples).
Stage 2B Validation/Verification:	Verification and validation based on completeness and compliance checks of sample receipt conditions and both sample-related and instrument-related QC results (e.g., method blanks, surrogates, LCSs, duplicates, internal standards, holding times, frequency of QC samples, initial calibrations, continuing calibration, calibration blanks, instrument tunes).
Stage 3 Validation/Verification:	Verification and validation based on completeness and compliance checks of sample receipt conditions, both sample-related and instrument-related QC results, and recalculation checks (e.g., method blanks, surrogates, LCSs, duplicates, internal standards, holding times, frequency of QC samples, initial calibrations, continuing calibration, calibration blanks, instrument tunes, instrument response data, recalculation of selected laboratory QC and sample results).
Stage 4 Validation/Verification:	Verification and validation based on completeness and compliance checks of sample receipt conditions, both sample-related and instrument-related QC results, recalculation checks, and the review of actual instrument outputs (e.g., method blanks, surrogates, LCSs, duplicates, internal standards, holding times, frequency of QC samples, initial calibrations, continuing calibrations, calibration blanks, instrument tunes, instrument response data, recalculation of selected laboratory QC and sample results, instrument output evaluated for sample results).

For this work, the following "stages" of validation and verification will be performed for the following specific data types:

- Indoor air quality samples: Ten percent of samples will receive Stage 4 Validation/Verification; the remaining 90 percent of samples will receive Stage 2B Validation/Verification. This level of validation and verification is required as this data is being compared to RSLs. The ten percent Stage 4 Validation/Verification will identify if QC parameters are being met for those samples. The remaining samples in the data package that are a Stage 2B Validation/Verification level will be sufficient. In most cases any QC criteria that is outside of acceptance limits identified from the Stage 4 Validation/Verification may be applicable to the Stage 2B samples, and the validator will use professional judgement on whether those samples need qualification.

- VMP samples: Ten percent of samples will receive Stage 4 Validation/Verification; the remaining 90 percent of samples will receive Stage 2B Validation/Verification. This level of validation/verification for these samples is sufficient given the DQOs (e.g. comparison to cleanup levels, mass removal calculations, etc).

- DPE and VEW samples: 100 percent of samples will receive Stage 2B Validation/Verification. This level of validation/verification for these samples is sufficient given the DQOs (e.g. comparison to cleanup levels, mass removal calculations, etc).

- Treatment plant samples: 100 percent of samples will receive Stage 2B Validation/Verification. This level of validation/verification for these samples is sufficient given the DQOs (e.g. substantive compliance per the HRA).

During the validation process, if laboratory QC issues are identified that require a more extensive level of validation (Stage 3 or 4) the client will be notified, and a recommendation will made for the number of samples that should be validated at a higher level, along with the associated rationale.

Data will be validated in accordance with laboratory-specific limits, methods and the USEPA National Functional Guidelines (USEPA 2017) where applicable. Data quality and utility depends on many factors, including sampling methods, sample preparation, analytical methods, QC results, and documentation. Subcontract laboratories will be advised of all applicable documentation and procedural requirements.

Once the data are assembled, satisfaction of all validation criteria will be documented as listed below. Chemical data must meet criteria of: (1) custody and document control; and (2) sample representativeness. Physical data include: (1) sampling location, time, and personnel; (2) documentation; and (3) methods. Data validation and assessment of analytical data will be performed by technical personnel not associated with the sampling activities, under the supervision of the QA Manager.

To determine the usability of chemical data, the following items will be documented as appropriate (e.g., with laboratory records, laboratory SOPs by reference to an approved SOP manual, or with equipment manufacturer/supplier records):

- Laboratory/field instrumentation, including calibration data, standard methods and references.

- Proper sample bottle preparation.

- Review of calibration and tuning summary data. For SIM analysis, ion ratio and acceptance windows must be provided.

- Laboratory analysis methods, including reference methods.

- Laboratory analysis detection limits.

- Verification of standards using USEPA or National institute of Standards and Technology reference materials.

- Analysis of laboratory blanks, spikes, duplicates, etc., as specified herein.

- QC limits will be consistent with the limits specified in this SAP, applicable method and/or USEPA National Functional Guidelines (USEPA 2017).
- Analysis of field duplicates and blanks as specified herein.

To evaluate the custody and document control for samples and results, the following items will be documented:

- Field custody noted in field logbook or transfer-of-custody documentation for sample collection, handling, and shipment.
- Laboratory custody documented by transfer-of-custody documentation from either field personnel or shipper.
- Laboratory custody documented through designated laboratory sample custodian with secured sample storage area.
- Traceability of sample designation number(s) through entire monitoring system.
- Maintenance and storage of all field notebooks, laboratory data, and all custody documents.
- Completion of all forms and logbooks (indelible ink without alterations except as crossed-out [not erased] and initialed).
- Identity of sample collector.
- Dates of sample collection, shipping, and laboratory analysis.

The existence of appropriate and proper documentation associated with a sample's analysis may be judged as acceptable in a court of law; however, the possibility exists that individual testimony as to the proper application of all procedures may be required as well.

To determine sample representativeness, the following items must be checked:

- Comparability between field and laboratory measurements or suitable explanation of any discrepancy.
- Sample preservation technique and holding time.
- Sample storage within suitable temperature, light, and moisture conditions.
- Use of proper sample containers (e.g., inert for the parameter(s) of interest).
- Use of proper sample collection equipment.
- Use of proper laboratory preparation techniques.

G.5.3 Reconciliation with User Requirements

Once the data have been verified and validated, they will be evaluated to determine whether the DQOs have been satisfied. The data usability process will determine whether the data meet the assumptions under which the DQOs and the data collection design were developed. If the data do not support the underlying assumptions, then corrective action must be taken. Corrective action may include collecting additional data that fill in data gaps so that future decisions can be made.

Data generated during the operational and performance monitoring events will be used to evaluate the effectiveness of the OU-1 SVE remedy and to determine if the OU-1 SVE system is operating as effectively as possible.

Prior to any data interpretation, the data will be evaluated with respect to QA/QC results. Specifically, the data will be examined with regard to data qualifiers assigned during the data verification and validation process. If data verification or validation indicates that a particular result is unusable, the data will be rejected and not used during the data interpretation or risk screening process. If data verification or validation indicates that a result is estimated, the result may be used, but with caution, to assist in the data interpretation or risk screening process.

Upon successful completion of the data validation and verification process and assessment of usability of the data, new data generated for the project will be entered into the project database. Data will be available for analysis by the project manager and other authorized personnel.

Table G-5-1: Data Validation Requirements

Sampling Location	Validation Effort	Parameter	Method	Data Validation Level	Laboratory
Indoor Air Quality Samples	10 Percent of Total Samples (Minimum of 1)	VOCs	USEPA Method TO-15 and Method TO-15 SIM	Stage 4	Eurofins and TestAmerica[1]
	90 Percent of Total Samples			Stage 2B	
VMP Samples	10 Percent of Total Samples (Minimum of 1)	VOCs	USEPA Method TO-15	Stage 4	Eurofins
	90 Percent of Total Samples			Stage 2B	
DPE Well and VEW Samples	100 Percent of Samples	VOCs	USEPA Method TO-15	Stage 2B	Eurofins
Treatment System Samples[2]	100 Percent of Samples	VOCS	USEPA Method TO-15	Stage 2B	Eurofins

Notes:

[1] Ten percent of the Indoor Air Quality Samples are sent to TestAmerica for split analyses. These results will be validated to the same degree as data analyzed by Eurofins. For example, if the Eurofins sample is validated to Stage 2B, the split to Test America will also be validated to Stage 2B.

[2] Treatment system samples are collected from the influent to the lead GAC vessel, influent to the lag GAC vessel, and effluent from the lag GAC vessel.

DPE = dual phase extraction

GAC = granular activated carbon

SIM = Selective Ion Monitoring

TO-15 = USEPA analytical method for VOC analyses

VEW = vapor extraction well

VMP = vapor monitoring probe

VOCs = volatile organic compounds

USEPA - United States Environmental Protection Agency

Section G.6
References

Camp Dresser and McKee Inc. (CDM). 2010a. Final Removal Action Completion Report (RACR). April 7.

CDM Smith. 2018. *Remedial Action Construction Complete Report*, *Omega Full-Scale On-Site (OU-1) Soil Remedy*. August 1.

de maximis, inc. 2012. Interim Soil Vapor Extraction 2 System As-Built Report. November 2. (Submitted as part of Revised Draft Interim Soil Vapor Extraction System 2 Operations, Maintenance and Monitoring Manual, dated November 5.)

de maximis. 2018. *Interim Groundwater Containment Remedy Quarterly Performance Evaluation Report Second Quarter 2018,* Omega Chemical Superfund Site, OU-1. August 15.

USEPA. 1993. *Preparation of U.S. EPA Region 9 Field Sampling Plan for Private and State-Lead Superfund Projects* (EPA QAMS DCN 9QA-06-93). August.

USEPA. 1995. *Summa Canister Sampling* (SOP#1704). July 27.

USEPA. 2001. *EPA Requirements for Quality Assurance Project Plans* (EPA QA/R-5). March.

USEPA. 2006. *Guidance on Systematic Planning Using the Data Quality Objectives Process* (EPA QA/G-4). February.

USEPA. 2008. *Record of Decision, Operable Unit 1 (Soils)*, Omega Chemical Corporation Superfund Site, Whittier, California. September.

USEPA. 2009. *Guidance for Labeling Externally Validated Laboratory Analytical Data for Superfund Use* (EPA-540-R-08-005). January 13.

USEPA. 2010. *Consent Decree No. 00-05051*. October 6.

USEPA. 2011. Interim Action Record of Decision, Omega Corporation Superfund Site, Operable Unit 2, Los Angeles County, California, EPA ID: CAD042245001. September 20.

USEPA. 2017. *USEPA Contract Laboratory Program National Functional Guidelines for Superfund Organic Methods Data Review* (EPA-540-R-2017-002). January.

s