**OMEGA CHEMICAL SITE PRP ORGANIZED GROUP**
1322 Scott Street, Suite 104
San Diego, CA 92106
Office: (619)-546-837, fax: (619) 546-9980
e-mail: edm@demaximis.com

August 1, 2013

Ms. Lynda Deschambault
USEPA REGION IX, SFD 7-1
9th Floor
75 Hawthorne Street
San Francisco, CA 94105

Subject: Preliminary Design Report (PDR), Operable Unit 1 (On-Site Soil), Omega Chemical Superfund Site, Whittier, California

Dear Mr. Stensby,

Per the requirements of the Statement of Work in Consent Decree Docket No. 10-05051 dated October 6, 2010 between the United States Environmental Protection Agency (EPA) and the Omega Chemical Site PRP Organized Group (OPOG), enclosed is the Preliminary Design Report (PDR) for the Operable Unit 1 On-site Soil Remedial Design/Remedial Action. The enclosed PDR has been revised to incorporate EPA comments dated April 10, 2013 and the results of the EPA/OPOG meeting conducted on April 25, 2013.

Should you have any questions, please feel free to contact me.

Sincerely,

Edward Modiano
Project Coordinator

cc:

Lynda Deschambault, USEPA
Stephanie Lewis, DTSC
Tom Perina, CH2MHill
Jeff Bamer, CDMSmith
Jaime Dinello, de maximis, inc.

Prepared by:

CDM Smith
111 Academy Way, Suite 150
Irvine, California 92617

# Full-Scale On-Site Soils Remedy Preliminary Design Report (REVISED DRAFT) Operable Unit 1

## Omega Chemical Superfund Site Whittier, California

Prepared for:

Omega Chemical Site
PRP Organized Group
(OPOG)

**Project No. 97768.OSS.DESIGN**

August 1, 2013

The information contained in the document titled "Full-Scale On-Site Soils Remedy Preliminary Design Report (REVISED DRAFT), Operable Unit 1" for site "Omega Chemical Superfund Site, Whittier, California," dated "August 1, 2013," has received appropriate technical review and approval. The conclusions and recommendations presented represent professional judgments and are based upon findings from the investigations and sampling identified in the report and the interpretation of such data based on our experience and background. This acknowledgement is made in lieu of all warranties, either expressed or implied. The activities outlined in this report were performed under the supervision of a California Registered Professional Engineer.

Reviewed and Approved by:

Jeff Bamer, P.E.
Environmental Engineer

Ravi Subramanian, P.E. License No. C 53679
Associate Environmental Engineer

# Table of Contents


**Section 1 Introduction ..... 1-1**

1.1 Purpose and Objective ..... 1-1
1.2 PDR Organization ..... 1-2

**Section 2 Design Basis ..... 2-1**

2.1 Remedial Action Objectives ..... 2-1
2.2 Previous and Ongoing Remedial Actions ..... 2-2
2.2.1 ISVE1 Operation ..... 2-2
2.2.2 ISVE2 Operation ..... 2-4
2.3 Recent Investigations ..... 2-5
2.3.1 Initial 2011 Investigation Summary ..... 2-5
2.3.2 2012 Investigation Field Procedures ..... 2-6
2.3.3 2012 Investigation Sampling Results ..... 2-7
2.3.4 2013 Investigation Field Procedures ..... 2-7
2.3.5 2013 Investigation Sampling Results ..... 2-8
2.4 Investigation Recommendations ..... 2-8

**Section 3 Project Description and Preliminary Design ..... 3-1**

3.1 Proposed Project Approach ..... 3-1
3.2 Design Basis ..... 3-2
3.2.1 Estimated Flows, Vacuums, and Radii of Influence ..... 3-2
3.2.2 Estimated Influent Concentrations ..... 3-4
3.3 SVE System Components ..... 3-4
3.3.1 Extraction Wells and Monitoring Probes ..... 3-4
3.3.2 Conveyance Piping ..... 3-5
3.3.3 Treatment Equipment ..... 3-6
3.3.4 Effluent Discharge ..... 3-7
3.3.5 Waste Streams ..... 3-7
3.3.6 System Control Strategy ..... 3-7
3.4 Dual Phase Extraction System Components ..... 3-8
3.4.1 Extraction Wells and Monitoring Wells ..... 3-8
3.4.2 Pumps and Conveyance Piping ..... 3-8
3.4.3 Treatment Equipment ..... 3-8
3.4.4 Effluent Discharge ..... 3-9
3.4.5 Waste Streams ..... 3-9
3.4.6 System Control Strategy ..... 3-9
3.5 Performance Monitoring ..... 3-9

**Section 4 Project Implementation ..... 4-1**

4.1 Design-Build ..... 4-1
4.1.1 Preliminary Design Package ..... 4-1
4.1.2 Performance Specifications ..... 4-2
4.1.3 Procurement and Contracting ..... 4-2
4.1.4 Construction ..... 4-2
4.1.4.1 Vapor Extraction Well, Probe, and Conveyance Pipeline Installation ..... 4-2
4.1.4.2 Treatment Systems ..... 4-2
4.2 Startup, Operation, and Evaluation ..... 4-2

4.3 Substantive Permit Compliance ..... 4-3
4.3.1 CERCLA and ARARs Requirements ..... 4-3
4.3.2 South Coast Air Quality Management District ..... 4-3
4.3.3 Local Agency Permit Compliance ..... 4-4
4.3.3.1 City of Whittier ..... 4-4
4.3.3.2 Los Angeles County Fire Department, Hazardous Material Division ..... 4-4
4.3.3.3 Southern California Edison ..... 4-4
4.3.3.4 Drilling Fluids, Cuttings, and Purge Water Permits ..... 4-4
4.3.3.5 Los Angeles County Sanitation Districts ..... 4-4

**Section 5 Access and Institutional Controls ..... 5-1**

**Section 6 References ..... 6-1**

# List of Figures


Figure 1-1 Site Location Map ..... 1-3
Figure 2-1 Existing ISVE1 and ISVE2 System Layouts ..... 2-9
Figure 2-2 2011 VMPs and Proposed Step-out Locations ..... 2-10
Figure 2-3 Soil Gas Concentration Distribution (6 feet bgs) Tetrachloroethene (PCE) and Trichloroethene (TCE) ..... 2-11
Figure 2-4 Soil Gas Concentration Distribution (24 feet bgs) Tetrachloroethene (PCE) and Trichloroethene (TCE) ..... 2-12
Figure 2-5 Soil Gas Concentration Distribution (50 - 55 feet bgs) Tetrachloroethene (PCE) and Trichloroethene (TCE) ..... 2-13
Figure 2-6 Concentration Distribution (60 - 70 feet bgs) Tetrachloroethene (PCE) and Trichloroethene (TCE) ..... 2-14
Figure 3-1 Site Plan with Shallow Zone Estimated ROI – New Wells Only ..... 3-10
Figure 3-2 Site Plan with Shallow Zone Estimated ROI – All Wells ..... 3-11
Figure 3-3 Site Plan with Deep Zone Estimated ROI and Groundwater Components ..... 3-12


# List of Tables


Table 2-1 Current ISVE1 VEW Concentrations ..... 2-3
Table 2-2 Current ISVE2 VEW Concentrations ..... 2-5
Table 2-3 Volatile Organic Compounds (VOCs) Analytical Summary - Vapor Monitoring Probe Analytical Results ..... 2-15
Table 3-1 Proposed Extraction Well Schedule (Existing and Proposed) ..... 3-13
Table 3-2 Data Source for Vapor-Phase Influent Concentrations Estimate ..... 3-14
Table 3-3 SVE Systems GAC Usage Summary ..... 3-15
Table 3-4 Proposed Vapor Monitoring Probe (VMP) Schedule (Existing and Proposed) ..... 3-16


# Appendices


Appendix A Design Basis and Process Calculations
Appendix B Preliminary Design Drawings

# List of Acronyms

| | |
|---|---|
| 1,1-DCE | 1,1-dichloroethene |
| AOC | Administrative Order on Consent |
| ARARs | applicable or relevant and appropriate requirements |
| bgs | below ground surface |
| CD | Consent Decree |
| CDM Smith | CDM Smith Inc. (formerly Camp Dresser & McKee [CDM]) |
| CERCLA | Comprehensive Environmental Response, Compensation, and Liability Act |
| COCs | compounds of concern |
| CSM | conceptual site model |
| DB | Design-Build |
| DPE | dual-phase extraction |
| DQOs | Data Quality Objectives |
| FRR | Fred R. Rippy |
| FS | Feasibility Study |
| FSP | Field Sampling Plan |
| GAC | granular activated carbon |
| gpm | gallons per minute |
| GWTS | Groundwater Treatment System |
| HDPE | high density polyethylene |
| HRAs | Health Risk Assessments |
| HVAC | heating, ventilation, and air conditioning |
| ICs | institutional controls |
| ISVE | interim SVE |
| LACFD | Los Angeles County Fire Department |
| LACSD | Los Angeles County Sanitation Department |
| LEL | lower explosive limit |
| $\mu g/m^3$ | microgram per cubic meter |
| $mg/m^3$ | milligrams per cubic meter |
| MIP | Membrane Interface Probe |
| OM&M | Operation, Maintenance, and Monitoring |
| Omega | Omega Chemical Corporation |
| OPOG | Omega Chemical Site PRP Organized Group |
| OSS | on-site soils |
| OU-1 | Operable Unit 1 |
| P&ID | Piping and Instrumentation Diagram |
| PCE | tetrachloroethene |
| PDR | Preliminary Design Report |
| PID | photoionization detector |
| PMP | Performance Monitoring Plan |
| ppbv | parts per billion by volume |
| ppmv | parts per million by volume |
| PRP | Potentially Responsible Party |
| PVC | polyvinyl chloride |
| QAPP | Quality Assurance Project Plan |
| RAOs | Remedial Action Objectives |
| RD/RA | Remedial Design/Remedial Action |

| | |
|---|---|
| RI | Remedial Investigation |
| ROD | Record of Decision |
| ROI | radius or radii of influence |
| ROP | Regional Occupational Program |
| ROW | rights-of-way |
| RTC | Response to Comments |
| SAP | Sampling and Analysis Plan |
| SCE | Southern California Edison |
| scfm | standard cubic feet per minute |
| SCAQMD | South Coast Air Quality Management District |
| Site | Omega Chemical Superfund Site |
| SOW | Statement of Work |
| SSD | sub-slab depressurization |
| STMAS | Short Term Mitigation Air Sampling |
| SVE | soil vapor extraction |
| TCE | trichloroethene |
| TM | Technical Memorandum |
| USEPA | United States Environmental Protection Agency |
| VEWs | vapor extraction wells |
| VFD | variable frequency drive |
| VMP | Vapor Monitoring Probe |
| VOC | volatile organic compound |
| WCCS | Women's and Children's Crisis Shelter |

# Section 1

# Introduction

On behalf of the Omega Chemical Corporation Superfund Site (Site) Potentially Responsible Party (PRP) Organized Group (OPOG), CDM Smith Inc. (CDM Smith) has prepared this Preliminary Design Report (PDR) pursuant to the Remedial Design/Remedial Action (RD/RA) Statement of Work (SOW) under the Consent Decree (CD). This CD between the United States and OPOG was lodged into the U.S. District Court, Central District of California on July 16, 2010, and describes the Site Operable Unit One (OU-1) Record of Decision (ROD), signed by the United States Environmental Protection Agency (USEPA) on September 30, 2008 (OU-1 ROD) (USEPA 2008). The OU-1 ROD identified soil vapor extraction (SVE) as the selected remedy for the OU-1 on-site soils (OSS) i.e., soils between the ground surface and the water table.

In 2010, prior to the initiation of the RD/RA process detailed in the ROD, USEPA required OPOG to design and implement an interim SVE system (ISVE1) at the Site and immediately adjacent properties via an Administrative Order on Consent (AOC). The ISVE1 system was designed, constructed, and started in June 2010, and has been operational since that time. In 2012, an additional ISVE system (ISVE2) was designed and implemented, and has been operational since March 2012. The SVE system detailed in this document is referred to herein as the "full-scale" SVE system. A RD/RA Work Plan (CDM Smith 2010c) was prepared, which addressed the remedial approach, management strategy, and scope for the design and implementation of the full-scale SVE system.

The draft PDR was submitted to USEPA on October 24, 2012, and comments were received on April 10, 2013. Following submission of the first draft of this PDR, receipt of comments, and further discussion, this PDR has been revised to incorporate USEPA comments, including additional deep downgradient SVE and the concurrent implementation of dual-phase extraction (DPE), which was specified as a contingency in the ROD.

This PDR meets the requirements of the ROD and RD/RA Work Plan and presents the preliminary design of the full-scale OSS remedy.

## 1.1 Purpose and Objective

The ROD for the OU-1 Soils remedy established three Remedial Action Objectives (RAOs). These are:

1. Reduce or eliminate the vapor intrusion risk associated with volatile organic compound (VOC) vapors in contaminated soils;

2. Reduce or eliminate the risk associated with direct exposure to, contact with, and/or ingestion of contaminated soils; and

3. Reduce or eliminate contaminant migration to groundwater to levels that protect the groundwater resource.

In accordance with Task 9 of the RD/RA SOW and Section 3.2.1 of the RD/RA Work Plan (CDM Smith 2010c), the purpose of this PDR is to provide a preliminary design (30 percent) of the full-scale SVE/DPE system, which will expand the existing ISVE1 and ISVE2 systems to meet the RAOs described

above. OU-1 is defined in the CD as the area of soil and groundwater contamination associated with the former Omega Chemical Corporation (Omega) property, and extending downgradient for approximately 100 feet southwest of Putnam Street in Whittier, California. The boundaries of OU-1, which is also known as the Phase 1a area of the Site, are shown on **Figure 1-1**. As detailed below, work to be performed will extend beyond the boundaries of OU-1, but all activities are considered "on-site" relative to the Comprehensive Environmental Response, Compensation, and Liability Act (CERCLA).

This document is designed to be complemented by the Performance Monitoring Plan (PMP) (CDM Smith 2013). The PMP outlines the proposed strategy to conduct a step-out investigation to identify any additional areas where remediation is appropriate, to confirm that the full-scale remedy is meeting the design criteria, and to optimize or improve the performance of the system as needed.

## 1.2 PDR Organization

The remaining sections of the PDR are organized as follows:

- Section 2 presents the different aspects of the design basis, a more detailed discussion of the RAOs, a description of previous and ongoing interim remedial actions, and a description of the recent soil vapor investigation activities.
- Section 3 describes the full-scale remedy basis of design and the design of the specific system components including the concepts, assumptions, standards, and preliminary interpretations and calculations used to select the design approach.
- Section 4 discusses the manner in which the systems will be contracted and implemented, including how implementation will be performed in compliance and/or substantive compliance with applicable or relevant and appropriate requirements (ARARs), and a preliminary implementation schedule.
- Section 5 presents the approach that is planned to obtain property access, and the institutional controls (ICs) that will be implemented in accordance with the ROD.
- Section 6 contains a list of documents that contain additional details regarding Site background, history, and conditions that are referenced but not presented in this PDR.
- Appendices contain detailed design basis calculations and preliminary design drawings.

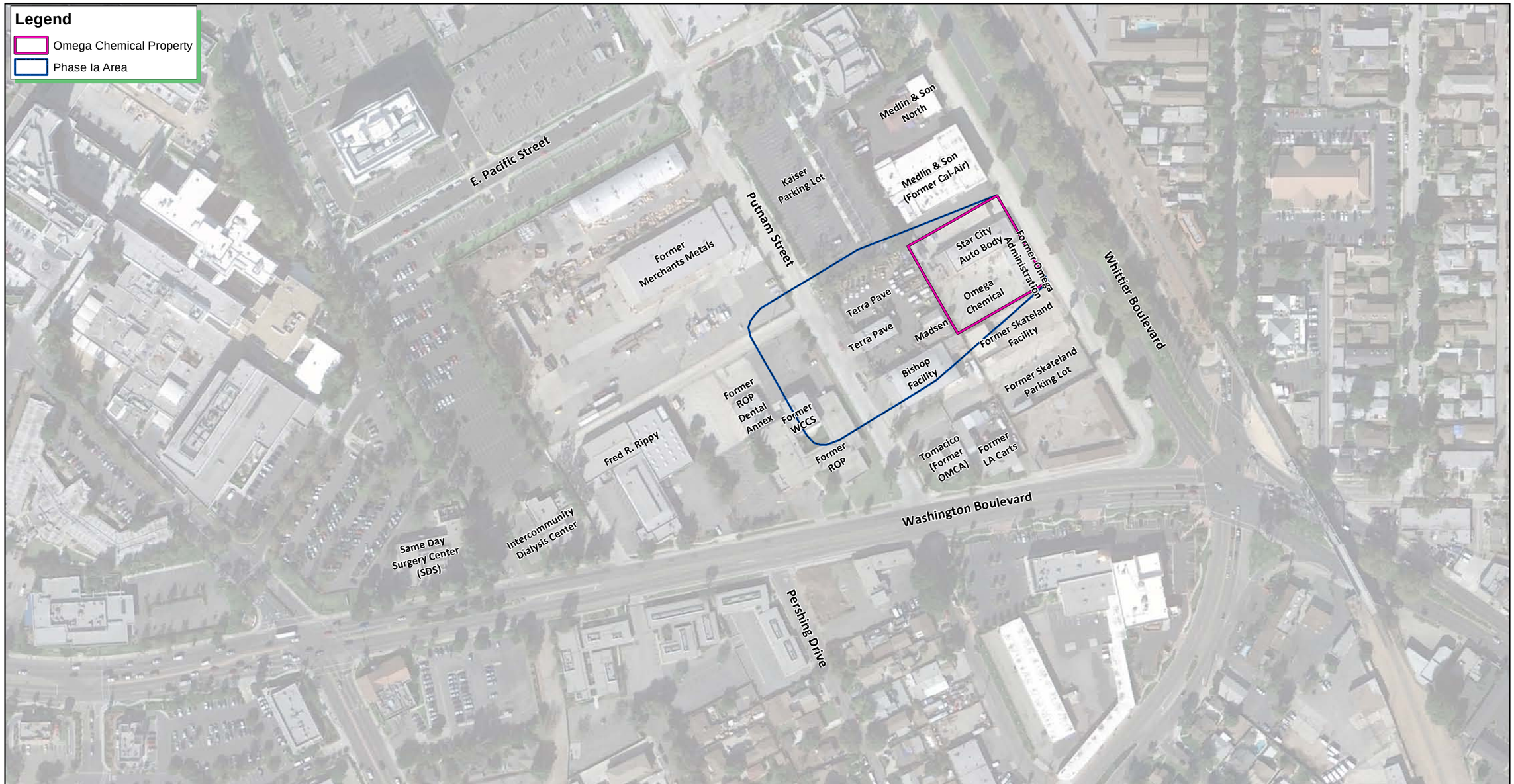


N

150 0 150

Feet

# Omega Chemical

Site Location Map

**Figure 1-1**

CDM Smith

schellerka K:\10500_Omega\2012\90421\RDRA\Figure26_ProposedStepOutLocations.mxd 10/15/2012

# Section 2

# Design Basis

The basis of design for the full-scale remedy requires an appropriate overlap of the remedial objectives with the current Site conditions. Therefore, this section describes the remedial objectives in more detail and also provides an updated description of the Site and current understanding of contaminant distribution, which has been affected by interim remedial actions and improved by recent soil vapor and groundwater investigations. A description of the soil vapor sampling is presented in Section 2.3.

## 2.1 Remedial Action Objectives

As stated above, the ROD for the OU-1 Soils remedy established three RAOs:

1. Reduce or eliminate the vapor intrusion risk associated with VOC vapors in contaminated soils,
2. Reduce or eliminate the risk associated with direct exposure to, contact with, and/or ingestion of contaminated soils, and
3. Reduce or eliminate contaminant migration to groundwater to levels that protect the groundwater resource.

As described in the ROD, the first two RAOs will be addressed by reducing concentrations in soil and soil vapor to levels that are protective of human health via shallow SVE. Shallow SVE has and will continue to provide both migration control and substantial mass removal benefits. Additionally, as is described further in Section 5, RAO #2 will also be addressed via maintenance of the existing "cap" for the Site, consisting of either asphalt or concrete, coupled to ICs that aim to prevent or mitigate the potential for exposure to contaminated soil and soil vapor.

RAO #3 will be addressed by deep SVE and DPE, designed to remove contaminant mass residing in the lower vadose zone and at the capillary fringe on the Omega and Terra Pave properties, which poses a threat to underlying groundwater. Deep SVE and DPE have been designed to remove existing mass that may continue to contribute to underlying groundwater, as well as vapor mass that may be off-gassing from groundwater. However, it is recognized that mass transfer conditions between the unsaturated and saturated zones on-site are complex based on the significant hydrogeologic and mass distribution heterogeneity noted at the Site. As a result, it is likely that a dynamic equilibrium exists between the saturated phase in groundwater and the vapor phase in the overlying vadose zone on the Omega and Terra Pave properties. This would suggest that two means for mass transfer/migration are possibly occurring at these locations—contaminants sorbed to the unsaturated soils may continue to leach into groundwater at a minimal rate (given the site is capped and water infiltration is likely minimal), and contaminants in groundwater volatilize ("off-gas") into the overlying soils. These dynamic equilibrium conditions must therefore be considered both in the design and implementation of the mass extraction technology and the collection and interpretation of performance monitoring data.

Conversely, in areas west of Putnam Street, it is likely that RAO #3 only marginally applies as these areas are downgradient and away from the Omega source area. Soil vapor data collected subsequent to the remedial investigation (RI) strongly suggest that a significant percentage of contamination in the vadose zone is derived via either off-gassing from groundwater or lateral transport of vapors from the Omega property. Proposed deep SVE wells east of Putnam Street are expected to significantly reduce the potential for horizontal migration of vapors away from the Omega property. Rather than an objective of reducing soil concentrations to protect groundwater, deep vapor extraction west of Putnam Street will instead focus on control and extraction of off-gases from the potential groundwater source (i.e., vapor mass emanating from groundwater mass transfer). This process will benefit groundwater quality by enhancing the concentration gradient from groundwater to soil gas for effective mass removal. Therefore, the design of the full-scale remedy west of Putnam Street will focus on deep SVE in the areas where both soil gas and groundwater data indicate that groundwater concentrations are the highest, i.e., in the vicinity of and north/northeast of groundwater monitoring wells OW-9 and PZ-9, which are shown on **Figure 2-1**, and other areas near the plume axis. Further discussion of this approach is provided in the remainder of this section and Section 3.

## 2.2 Previous and Ongoing Remedial Actions

Documents such as the RI Report (CDM Smith 2007a) and the Feasibility Study (FS) (CDM Smith 2008) described the pre-remediation Site conditions and the concentrations of compounds of concern (COCs) in soil vapor, groundwater, and indoor air. During the last 2 years, the implementation of interim remedial actions (ISVE1 and ISVE2) has removed substantial contaminant mass, controlled vapor flux and subsequent vapor intrusion, and significantly affected the distribution of COCs at the Site, as described in the following sections. These changes, along with the data from recently-performed investigations, provide an updated understanding of COC distribution at the Site that is the basis for the full-scale design. The general layout of the ISVE1 and ISVE2 systems is shown in **Figure 2-1**.

In addition, the operational characteristics of the vapor extraction wells (VEWs) used in the interim remedial actions provide a sound basis for estimating the performance of future wells, for the purposes of design. These parameters are discussed further in Section 3.

### 2.2.1 ISVE1 Operation

Following some extended pilot testing and design activities (CDM Smith 2010a), ISVE1 was installed by May 2010 and began continuous operation in June 2010 (CDM Smith 2010b). The ISVE1 system consists of an off-gas treatment system, a VEW network (wells and piping), and a VMP network (wells and probes). The ISVE1 system was expanded, in September and October 2010, to include additional VEWs (VE-6S, VE-4S, and VE-15S) and associated vapor monitoring probes (VMPs), and conveyance pipeline from the additional VEWs to the ISVE treatment system located on the Former 3 Kings lot, as shown in **Figure 2-1**. The ISVE1 blower skid was replaced with a different blower skid in April 2011 to accommodate operation of the additional VEWs, and achieve VEW target flow rates and vacuums. Further information on the system, including record drawings, can be found in the ISVE1 Operation, Maintenance, and Monitoring (OM&M) Manual (JHA Environmental Inc. 2011).

The operational results of ISVE1 have been documented in the Short Term Mitigation Air Sampling (STMAS) reports, which are currently generated quarterly. In summary, as of March 31, 2013, an estimated total of approximately 7,800 pounds of VOCs have been removed from the shallow vadose zone by ISVE1 and pilot testing. In June 2010, the influent concentration of total VOCs was

approximately 350 parts per million by volume (ppmv). Tetrachloroethene (PCE) comprises the majority of contaminant mass in the ISVE1 influent and is the predominant compound at the Site. After almost 3 years of operation, total VOC influent concentrations have dropped below 1 ppmv. As a direct result of these activities, indoor air concentrations have been reduced, and the operation of all aboveground interim mitigation measures (e.g., heating, ventilation, and air condition [HVAC] equipment modifications and air purifiers) in buildings in the area have been discontinued, with the exception of Bishop Company and Terra Pave buildings, where the HVAC fans are still in operation on a 24/7 basis as an interim measure. However, as documented in the STMAS report, indoor air concentrations from all samples collected in the first quarter of 2013 inside the Bishop Company, Terra Pave, Star City, and Madsen Roofing buildings were all less than 1 microgram per cubic meter ($\mu g/m^3$) for PCE, which is one order of magnitude below its respective Long-Term Health Protective Screening Criteria of 47 $\mu g/ m^3$. Similarly, all samples have less than 1 $\mu g/m^3$ of trichloroethene (TCE), i.e., less than one third of the respective Long-Term Health Protective Screening Criteria of 3 $\mu g/m^3$.

VOC concentrations at the extraction wells have dropped significantly as the soil vapor in the shallow vadose zone has been exchanged. As indicated in **Table 2-1**, recent field measurements (as measured by photoionization detectors [PID]) and analytical samples collected from the 10 ISVE1 VEWs indicate that most of the wells are only contributing minimal amounts of mass. Based on analytical data and flow measurements, it is estimated that VE-8S and VE-11S are currently extracting over 92 percent of the total mass removed by the ISVE1 system. The remaining eight wells each produce, on average, only 1 percent of the total mass extracted by the system.

**Table 2-1 Current ISVE1 VEW Concentrations**

| VEW ID | Total VOCs by PID [ppmv] | Total VOCs by Analysis [ppbv] | Influent PCE [ug/m3] | Influent Flow [scfm] | Percent of Total ISVE1 Mass Removal | Percent Reduction in PCE Since Startup | Percent Reduction in TCE Since Startup |
|---|---|---|---|---|---|---|---|
| VE-1S | 3.7 | 320 | 800 | 92 | 1% | >99% | 98% |
| VE-5S | 3.7 | 270 | 1,000 | 125 | 1% | >99% | >99% |
| VE-6S | 3.2 | 370 | 1,400 | 240 | 3% | 87% | 90% |
| VE-8S | 136.1 | 16,000 | 110,000 | 137 | 84% | 95% | 99% |
| VE-9S | 2.7 | 210 | 1,000 | 70 | 0.6% | >99% | >99% |
| VE-10S | 5.5 | 300 | 1,500 | 40 | 0.5% | >99% | >99% |
| VE-11S | 13.7 | 2,100 | 9,500 | 104 | 8% | 99% | 99% |
| VE-12S | 2.7 | 340 | 1,200 | 57 | 0.7% | >99% | >99% |
| VE-14S | 1.7 | 57 | 54 | 33 | 0.1% | 87% | 20% |
| VE-15S | 2.1 | 130 | 270 | 87 | 0.4% | 90% | 75% |

Notes:
ppbv - parts per billion by volume
scfm – standard cubic feet per minute
PID and flow measurements collected on 5/6/13
Analytical samples collected on 3/26/13

As noted above, all of the VEWs that have been in operation since the ISVE1 system started have experienced very significant reductions in influent concentrations. By comparison, decreases in influent VOC concentrations at the expansion wells (VE-6S, VE-14S, and VE-15S) has been less than the original VEWs, but initial concentrations at these expansion VEWs were lower than those observed at the original VEWs (de maximis 2013), which was expected given their location upgradient of the Omega source area and limited source mass.

### 2.2.2 ISVE2 Operation

The second ISVE system (ISVE2), consisting of an off-gas treatment system, a VEW network (wells and piping), and a VMP network (wells and probes), was installed at the Site by February 2012, and the system began continuous operation in March 2012 with some optimization but no significant modifications. The layout of the ISVE2 system is also shown in **Figure 2-1**. Further information on the system, including record drawings, can be found in the ISVE2 OM&M Manual (JHA Environmental Inc. 2012).

The operational results of ISVE2 are also documented in the STMAS reports. As of March 31, 2013, ISVE2 had removed an estimated total of approximately 1,100 pounds of VOC mass from the subsurface. The initial VOC concentrations in the ISVE2 influent were lower than that observed at ISVE1 and less contaminant mass has been removed. However, the same general concentration trends have been observed in VEW and treatment system influent concentrations —in March 2013, the influent concentrations of total VOCs was approximately 13 ppmv, down from approximately 51 ppmv, which was observed after startup in March 2012. Indoor air concentrations have similarly decreased. Specifically, indoor air concentrations from samples collected in June 2012 inside buildings on the former Women's and Children's Crisis Shelter (WCCS), former Regional Occupational Program (ROP), and Fred R. Rippy (FRR) properties were all less than 1 $\mu g/m^3$ for PCE, which is one order of magnitude below its Long-Term Health Protective Screening Criteria of 47 $\mu g/m^3$. Similarly, all samples had below 1 $\mu g/m^3$ of TCE, i.e., less than one third of the respective Long-Term Health Protective Screening Criteria of 3 $\mu g/m^3$. The effectiveness of the ISVE2 system has allowed for discontinuation of operation of the sub-slab depressurization (SSD) systems in the ROP and WCCS buildings. Continued indoor air sampling has shown no subsequent rebound in indoor air concentrations (de maximis 2013). As an interim measure, the HVAC fans in the FRR building are still in operation on a 24/7 basis.

Similar to ISVE1, soil vapor VOC concentrations have dropped significantly in response to vacuum. As indicated in **Table 2-2**, recent PID measurements and analytical samples collected indicate that most of the ISVE2 VEWs are only contributing minimal amounts of mass as expected given the lower source mass. Based on analytical data and flow measurements, it is estimated that VE-22S and VE-26S are extracting about 88 percent of the total mass removed by the ISVE2 system. There are three other wells—VE-21S, VE-27S, and VE-30S—which are removing approximately 5 percent of the total mass. The remaining six VEWs are removing the remaining 7 percent.

**Table 2-2 Current ISVE2 VEW Concentrations**

| VEW ID | Total VOCs by PID [ppmv] | Total VOCs by Analysis [ppbv] | Influent PCE [µg/m$^3$] | Influent Flow [scfm] | Percent of Total ISVE2 Mass Removal | Reduction in PCE Since Startup | Reduction in TCE Since Startup |
|---|---|---|---|---|---|---|---|
| VE-20S | 4.1 | 580 | 680 | 112 | 3% | 73% | 85% |
| VE-21S | 6.7 | < 130 | 460 | 25 | 0.1% | 84% | 89% |
| VE-22S | 41.7 | 6,900 | 27,000 | 65 | 17% | 91% | 86% |
| VE-23S | 4.4 | 160 | 460 | 142 | 0.9% | 99% | 99% |
| VE-24S | 7.2 | 600 | 1,200 | 33 | 0.8% | 81% | 77% |
| VE-25S | 3.5 | 200 | 810 | 312 | 2% | 99% | 99% |
| VE-26S | 28.2 | 8,300 | 25,000 | 221 | 71% | 96% | 95% |
| VE-27S | 10.7 | 1,000 | 3,000 | 47 | 2% | 95% | 87% |
| VE-28S | 8.6 | 53 | 150 | 21 | 0.04% | >99% | >99% |
| VE-29S | 9.9 | 150 | 370 | 37 | 0.2% | 93% | 92% |
| VE-30S | 5.1 | 470 | 1,000 | 156 | 3% | >99% | >99% |

Notes:
ppbv - parts per billion by volume
scfm – standard cubic feet per minute
PID and flow measurements collected on 5/7/13
Analytical samples collected on 3/26/13
Total VOCs at VE-21S was not detected above the indicated detection limit. A sum of all detected VOCs was approximately 110 ppb.
TCE and PCE concentrations for VE-21S and VE-24S increased within a month of startup. Percent reductions shown here are based on those higher concentrations.

As noted above, concentrations in most of these VEWs have decreased significantly since startup. The two wells (VE-21S and VE-24S), where total VOC concentrations increased temporarily after startup, have also shown recent decreases. Although the ISVE2 system has been operational for a shorter period of time, influent concentrations have reached similar levels as ISVE1 because soil vapor concentrations in the shallow vadose zone were initially lower. The conceptual site model (CSM) for the source of soil vapor impacts in this area is lateral transport of vapors from the Omega property and off-gassing from groundwater and vertical transport from the deep vadose zone.

## 2.3 Recent Investigations

As part of the RD/RA work for the Site, pre-design soil vapor field investigations were performed in 2011, 2012, and 2013, as described in the following subsections.

### 2.3.1 Initial 2011 Investigation Summary

The initial 2011 investigation included installation and sampling of soil VMPs within and north, south, and west of OU-1 to investigate the extent of VOCs in soil vapors in support of the design of the full-scale OU-1 remedy. Due to access constraints, the soil vapor sampling investigation occurred in several phases during 2011, and VMPs were installed at 34 locations (VMP-28 through VMP-61, see **Figure 2-2**). VMP installation and sampling occurred in an iterative manner during February/March, June, September, and November/December 2011. Many of the locations were also continuously cored for lithology and/or were profiled using Membrane Interface Probe (MIP) technology to assess total VOCs and soil conductivity.

VMPs were installed at each location at typical depths of 6, 12, 24, 40, 55, 60, and 70 feet below ground surface (bgs). It should be noted that, at the majority of the 34 VMP locations, three separate borings were advanced and probes were installed to various depths in the three borings. In two of the

three borings at each location, the VMPs were completed with 6-inch long and ½-inch diameter steel vapor probes. All VMPs were completed at ground surface in 6-inch diameter, flush-grade well boxes.

In the third boring at most locations, the 55 feet bgs VMPs were constructed using 1-inch diameter Schedule 40 polyvinyl chloride (PVC) blank casing and 5-foot long PVC screen (20 slot) sections installed in the interval from 50 to 55 feet bgs. PVC screen was used at this depth (where sandy materials were generally encountered), to allow for potential future use as SVE wells. All PVC VMPs were also completed at the ground surface in 6-inch diameter flush-grade well boxes.

Following a short period of time to allow the VMPs to equilibrate, one round of soil vapor samples were collected from all VMPs and were analyzed either on-site using a mobile laboratory (Method 8260B) or were submitted to an off-site fixed base laboratory for analysis (TO-15). Field investigation procedures and results were summarized in a Technical Memorandum (TM) (CDM Smith 2012). VMP installation and completion details were provided in the TM. The TM also provided a variety of figures illustrating concentrations for PCE, TCE, and Freon 113 for the 6, 24, 55, and 60 to 70 feet bgs depth intervals using color-coded and different-sized dots. The size of the dot was proportional to the concentration, with smaller dots signifying lower concentrations and larger dots signifying higher concentrations. Pie graphs showing the relative concentrations of PCE, TCE, and Freon 113 at each location at the depths noted above were also provided. The figures also included VMP and VEW data collected from the ISVE1 system installed at the Terra Pave and Bishop properties. Several geologic cross-sections were also developed and provided in the TM.

The TM recommended the installation of seven additional step-out VMPs to provide further definition of the extent of soil vapors. Five VMPs (Nos. 1 through 5) to depths of 70 feet bgs were proposed to the north of existing VMPs, in the vicinity of the former Merchant Metals and Arbo Box buildings. Two additional step-out locations (Nos. 6 and 7) to depths of 6 and 12 feet bgs were also proposed to the south of Washington Boulevard.

USEPA provided comments to the March 16, 2012, TM on May 9, 2012, requesting revisions to the TM figures, development of additional figures, and the installation of four additional step-out VMPs (A, B, C, and D) to determine lateral and vertical extent. USEPA further requested that all VMPs be advanced and sampled to the full depth of 70 feet bgs. OPOG provided formal written Response to Comments (RTC) to USEPA on June 21, 2012, and included with the RTC were revised and additional figures as requested by USEPA.

The locations of all 2011 VMPs and the 11 additional proposed step-out VMPs are illustrated on **Figure 2-2**. For complete details regarding the field procedures, findings, and recommendations of the 2011 field investigation, please refer to the TM.

### 2.3.2 2012 Investigation Field Procedures

Following acquisition of access, the seven VMPs proposed by OPOG and three of the four USEPA VMPs were installed and sampled to depths of 60 to 70 feet bgs in July and August 2012. Drilling procedures were similar to that utilized for the 2011 VMPs, and all locations were continuously cored for lithology. The 10 VMPs were generally installed at the same depths and in up to three separate borings, similar to what was done for the 2011 VMPs. The exception was the 50-foot probe at each location, which was completed with the 6-inch long stainless steel vapor probe vs. the 1-inch diameter by 5-foot long PVC screen, which was utilized during the 2011 investigation.

Following installation, proposed VMP Nos. 1 through 7 were relabeled VMP-63 through -67 and VMP-71 and -72, respectively. The proposed USEPA VMPs A, B, and D were relabeled VMP-68, VMP-69, and VMP-62. A VMP at location USEPA C (VMP-70) was not installed, as access could not be obtained. These VMP locations are shown on **Figure 2-3.**

### 2.3.3 2012 Investigation Sampling Results

Shortly after installation, one round of soil vapor samples were collected from all new VMPs and submitted for off-site fixed base laboratory for VOC analysis by method TO-15. The VOC results for the 10 step-out VMPs were added to the 2011 VMP results and are summarized and provided in **Table 2-3**. Concentrations of PCE and TCE for the 6, 24, 50-55, and 60-70 feet bgs depth intervals are illustrated in **Figures 2-3 through 2-6**. For wells that were sampled more than once, the color coding in the figures is based on the highest observed concentration from all samples collected in 2011 and 2012. In addition, on **Figure 2-6**, the highest observed concentration from both the 60 foot and 70 foot bgs samples is presented. The results are discussed below and grouped according to geographic location north, south, east, or west within and adjacent to OU-1.

At 4 of the 10 VMP locations, PCE was either not detected or was detected at very low concentrations (i.e., less than 1.2 milligrams per cubic meter [mg/m$^3$]) at all sampled depths. The 4 locations were as follows:

- VMP-62 at the southwest corner of the intersection of Washington Boulevard and Whittier Boulevard (eastern-most location),
- VMP-69 near Washington Boulevard (southwestern-most location), and
- VMP-71 and VMP-72 (southern-most locations).

At location VMP-68 (western-most location), PCE concentrations from depths of 6.5 to 40 feet bgs were also very low, and ranged from 0.32 to 1.6 mg/m$^3$. At 60 feet, the concentration was slightly elevated at 6.7 mg/m$^3$. During drilling, attempts to install a vapor probe at the 70-foot depth were unsuccessful at this location, due to collapse of the bottom of the boring. The 70-foot depth probe was also not installed at location VMP-69 due to collapse of the bottom of the boring.

At the four northern-most locations west of Putnam Street and north of the former Arbo Box property (VMP-64 through VMP-67), PCE concentrations were slightly elevated and ranged from 0.2 to 53 mg/m$^3$ at all sampled depths.

Of the 10 step-out VMP locations, the highest PCE concentrations were detected at location VMP-63, which is located east of Putnam Street (northeastern-most location) and just south of East Pacific Place. Concentrations at this location ranged from 50 to 390 mg/m$^3$ at all sampled depths.

### 2.3.4 2013 Investigation Field Procedures

In March 2013, four additional VMPs (VMP-70, VMP-73, VMP-74, and VMP-75) were installed south of Washington Boulevard as requested by USEPA. Following acquisition of access, the four VMPs were drilled, installed, and sampled as described in Section 2.3.2. The four additional VMP locations are also illustrated on **Figures 2-3 through 2-6**.

### 2.3.5 2013 Investigation Sampling Results

The VOC results for the four step-out VMPs were added to the 2011/2012 VMP results and are summarized in **Table 2-3**. Concentrations of PCE and TCE for the 6, 24, 50-55, and 60-70 feet bgs depth intervals are illustrated in **Figures 2-3 through 2-6**.

Detections at all four locations and sampled depths were very low, ranging from 0.0045 mg/m$^3$ at VMP-70 (50 feet bgs) and VMP-73 (24 feet bgs) to 1.2 mg/m$^3$ at VMP-74 (50 feet bgs). PCE was not detected at 10 of the 27 sampled depths.

USEPA has also requested the installation of two additional VMPs (VMP-76 and VMP-77). The proposed locations for these additional two VMPs are illustrated on Figures 3-1 and 3-2 of the PMP (CDM 2013). The two proposed VMPs will be installed and sampled following acquisition of access.

## 2.4 Investigation Recommendations

Based on the findings of the 2011/2012/2013 investigations, the preliminary design presented in this document includes proposed expansion of the current VEW network, both laterally and vertically. As indicated in **Figures 2-3 through 2-6**, additional shallow SVE wells are warranted in areas north of the ROP/WCCS alley way and north of the Terra Pave property. Also, deep SVE wells are warranted between the Omega source area and the FRR property. The manner in which SVE and DPE will be provided in these areas is described in the following section.

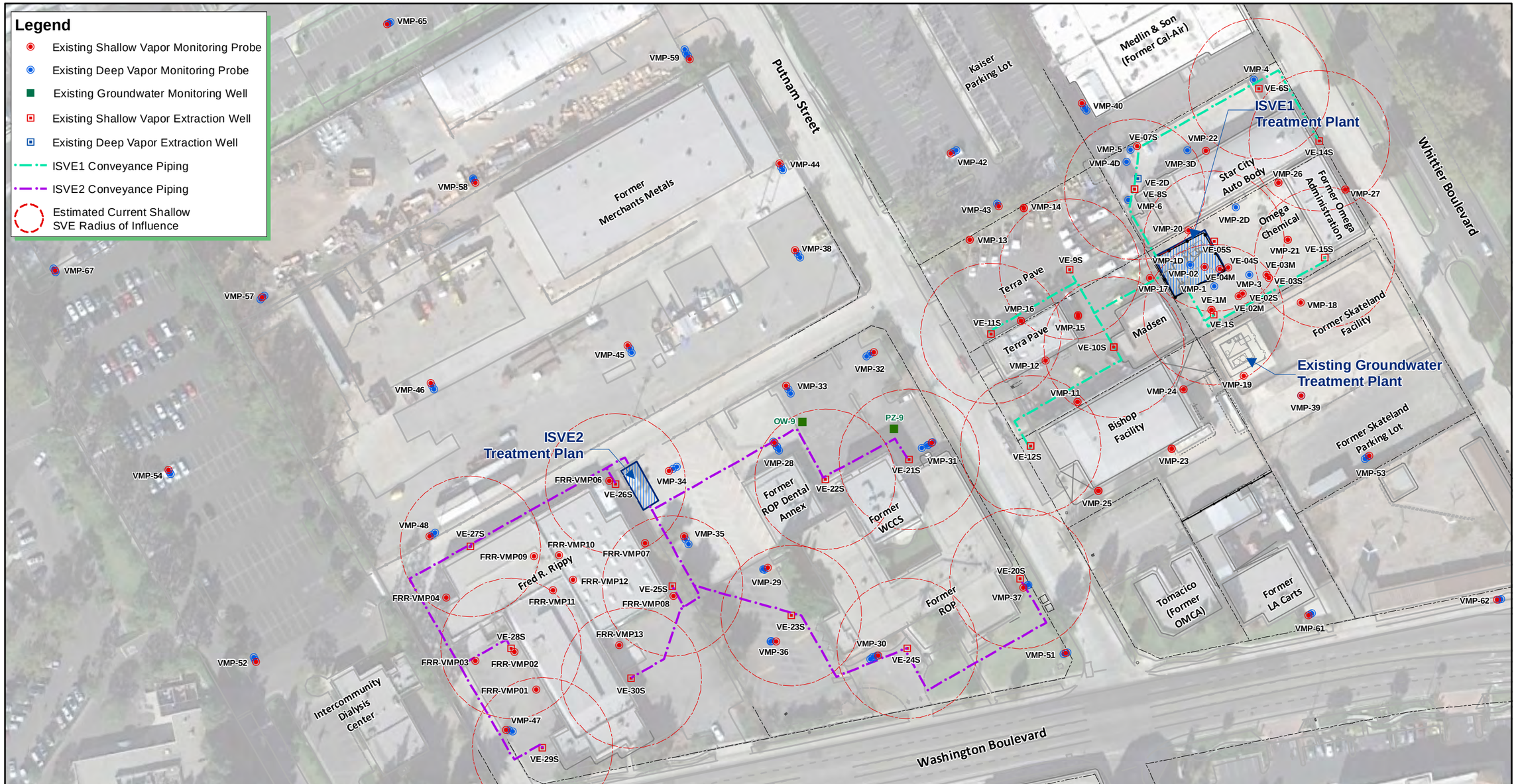


N

50 0 50

Feet

# Omega Chemical

Existing ISVE1 and ISVE2 System Layouts

**Figure 2-1**

CDM Smith

schellerka K:\10500_Omega\2012\90421\RDRA\Figure26_ProposedStepOutLocations.mxd 10/15/2012

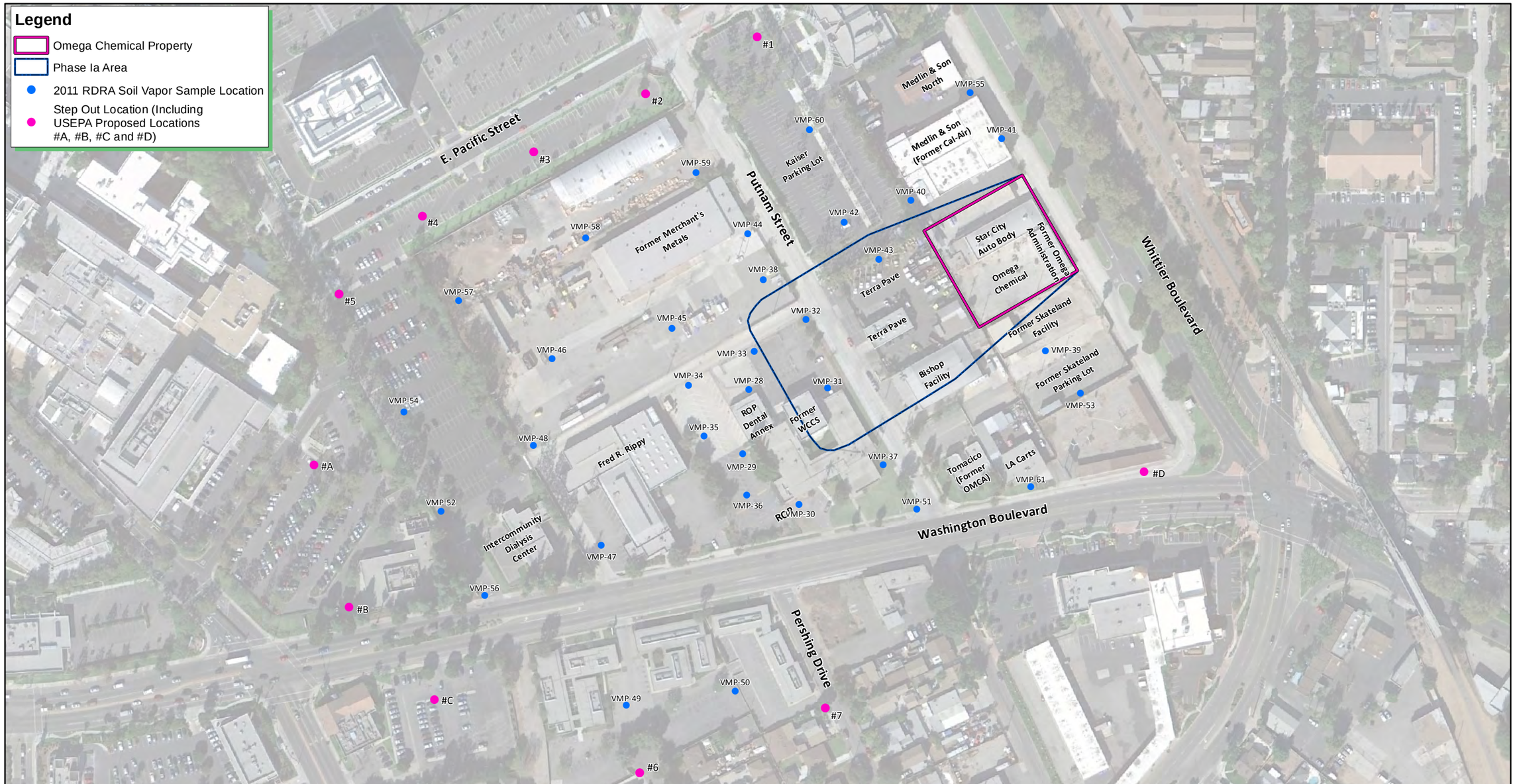


2011 VMPs and Proposed Step-out Locations

**Figure 2-2**

# Omega Chemical
# 2011 Soil Vapor Data

CDM Smith

schellerka K:\10500_Omega\2013\Expansion\Figure2-2_ProposedStepOutLocations.mxd 7/25/2013

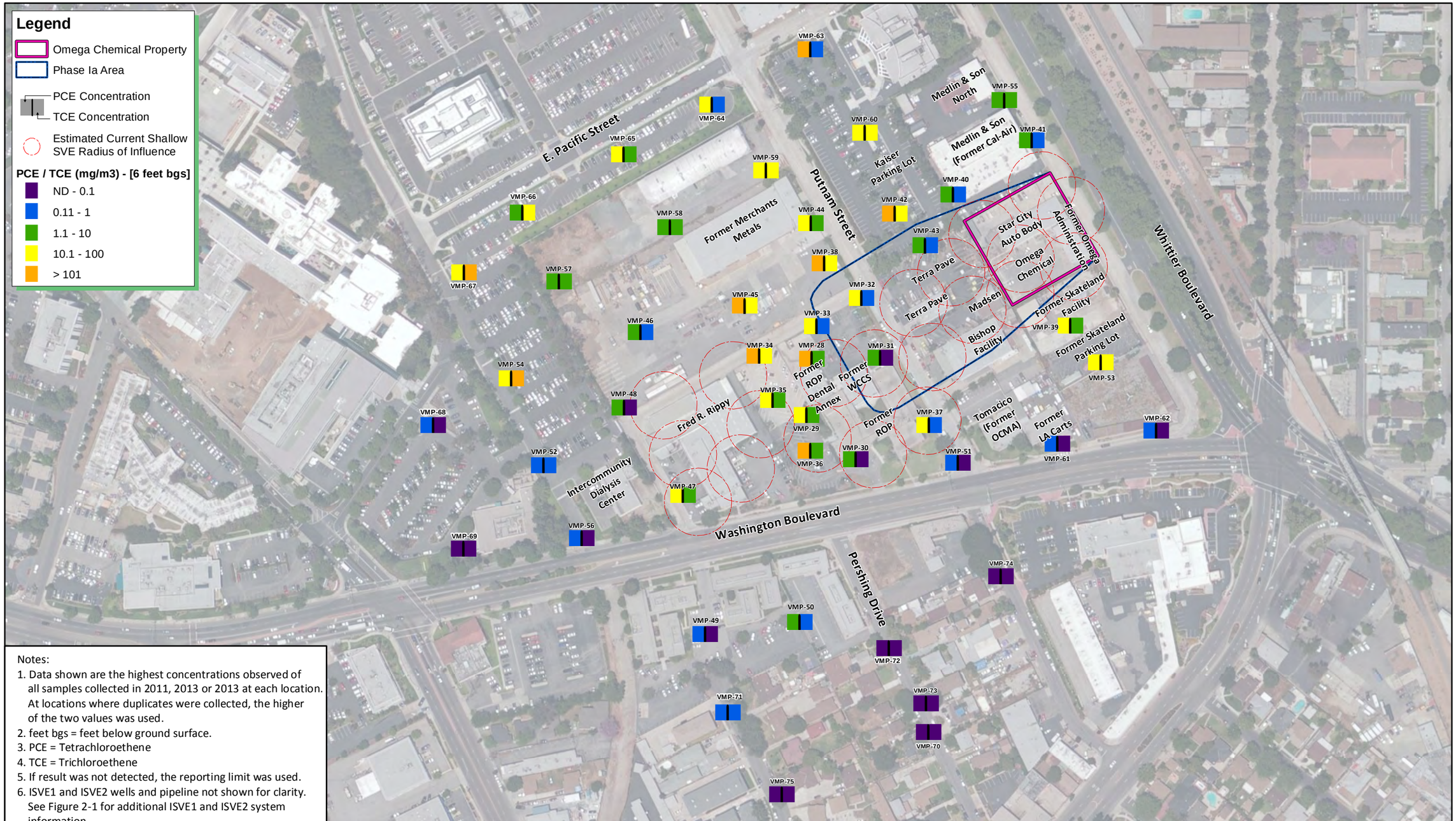


Notes:
1. Data shown are the highest concentrations observed of all samples collected in 2011, 2013 or 2013 at each location. At locations where duplicates were collected, the higher of the two values was used.
2. feet bgs = feet below ground surface.
3. PCE = Tetrachloroethene
4. TCE = Trichloroethene
5. If result was not detected, the reporting limit was used.
6. ISVE1 and ISVE2 wells and pipeline not shown for clarity. See Figure 2-1 for additional ISVE1 and ISVE2 system information.

N

100 0 100
Feet

# Omega Chemical

Soil Gas Concentration Distribution (6 feet bgs)
Tetrachloroethene (PCE) and Trichloroethene (TCE)

**Figure 2-3**

CDM Smith

schellerka K:\10500_Omega\2013\PDR\Figure2-3_SoilConcentration(6ft)VOCs.mxd 7/31/2013

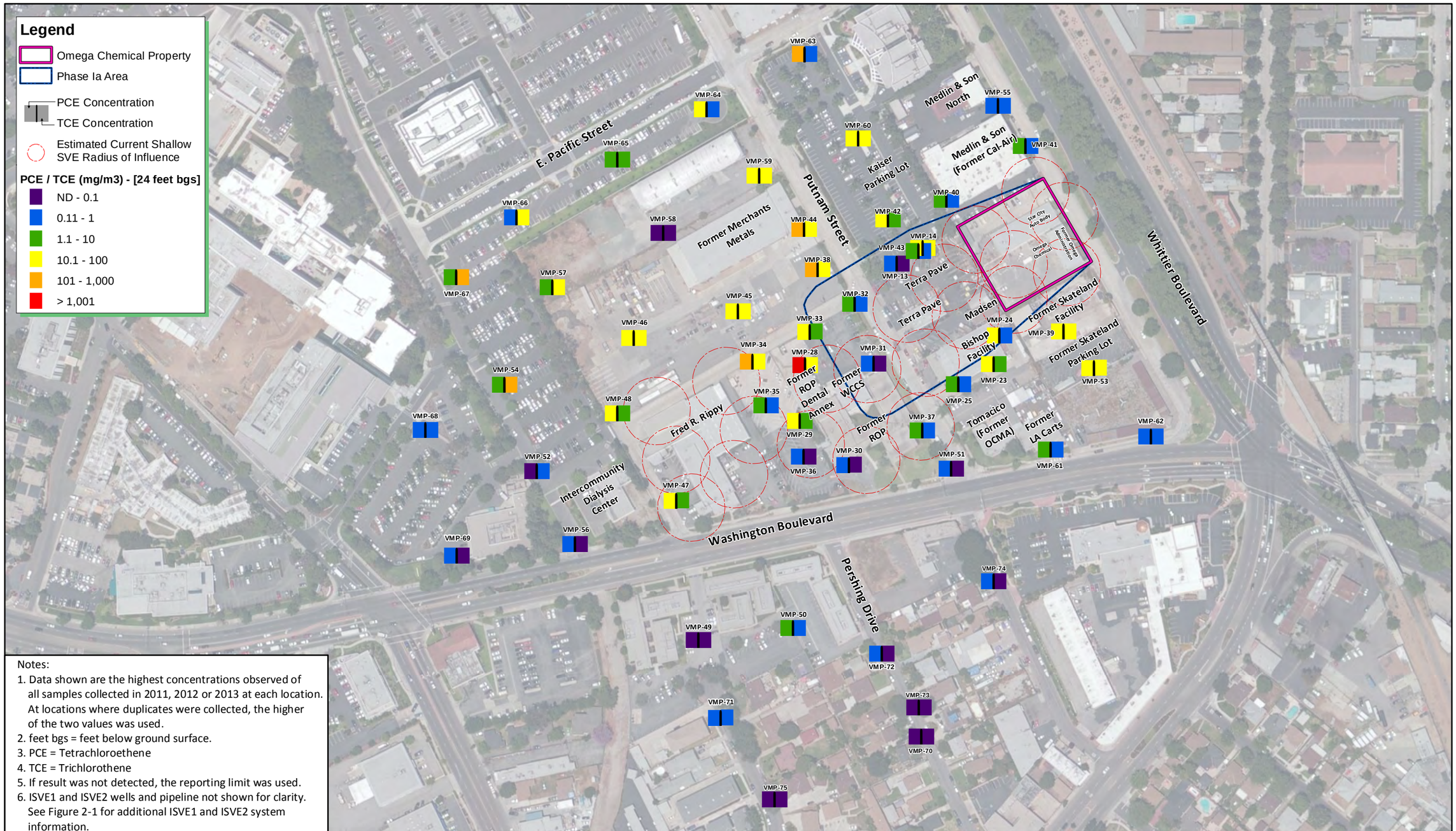


Notes:
1. Data shown are the highest concentrations observed of all samples collected in 2011, 2012 or 2013 at each location. At locations where duplicates were collected, the higher of the two values was used.
2. feet bgs = feet below ground surface.
3. PCE = Tetrachloroethene
4. TCE = Trichlorothene
5. If result was not detected, the reporting limit was used.
6. ISVE1 and ISVE2 wells and pipeline not shown for clarity. See Figure 2-1 for additional ISVE1 and ISVE2 system information.

N

100 0 100
Feet

# Omega Chemical

Soil Gas Concentration Distribution (24 feet bgs)
Tetrachloroethene (PCE) and Trichloroethene (TCE)

**Figure 2-4**

CDM Smith

schellerka K:\10500_Omega\2013\PDR\Figure2-4_SoilConcentration(24ft)VOCs.mxd 7/31/2013

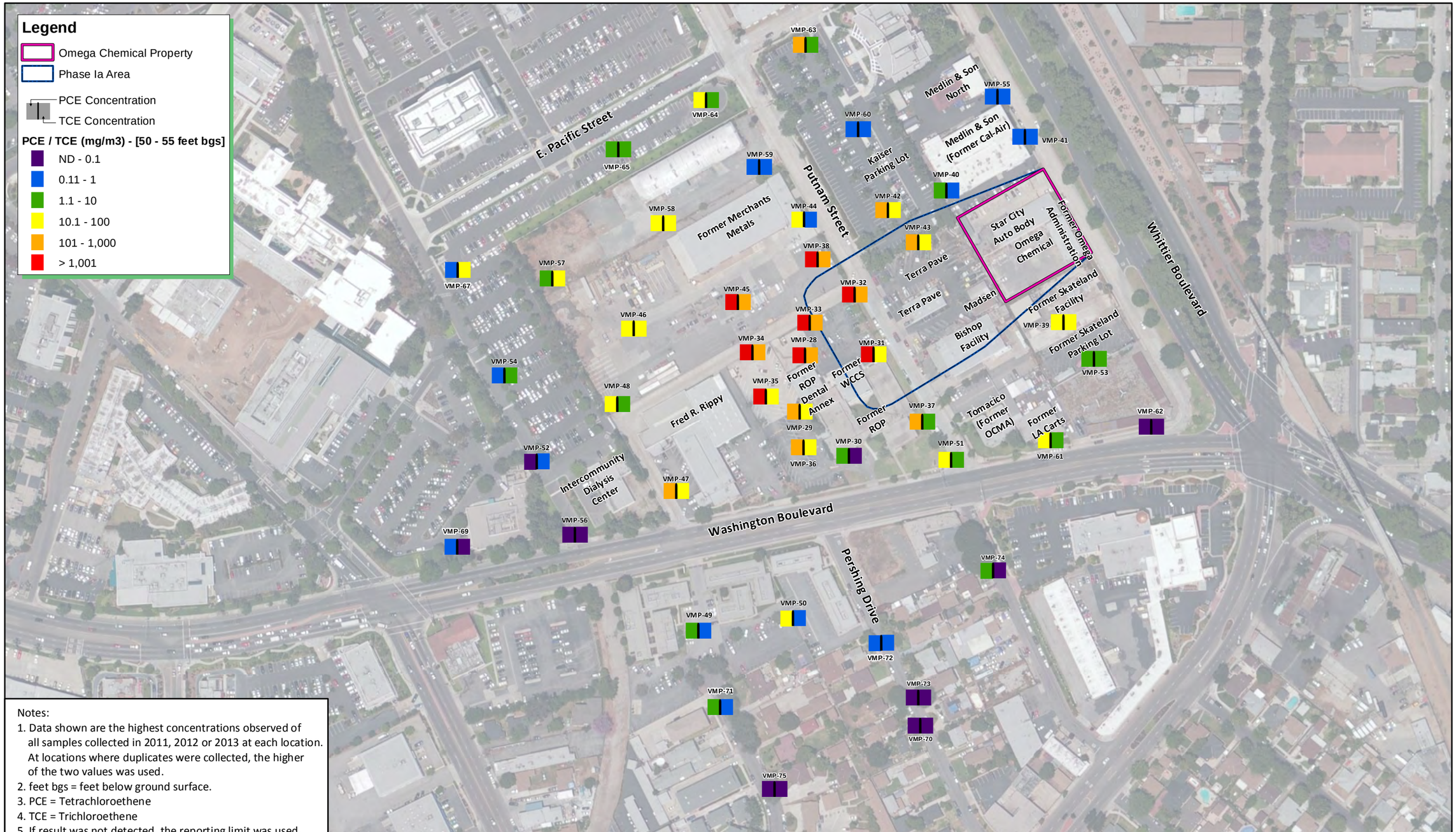


Notes:
1. Data shown are the highest concentrations observed of all samples collected in 2011, 2012 or 2013 at each location. At locations where duplicates were collected, the higher of the two values was used.
2. feet bgs = feet below ground surface.
3. PCE = Tetrachloroethene
4. TCE = Trichloroethene
5. If result was not detected, the reporting limit was used.

N

100 0 100
Feet

# Omega Chemical

Soil Gas Concentration Distribution (50 - 55 feet bgs)
Tetrachloroethene (PCE) and Trichloroethene (TCE)

**Figure 2-5**

CDM Smith

schellerka K:\10500_Omega\2013\PDR\Figure2-5_SoilConcentration(50-55ft)VOCs.mxd 7/31/2013

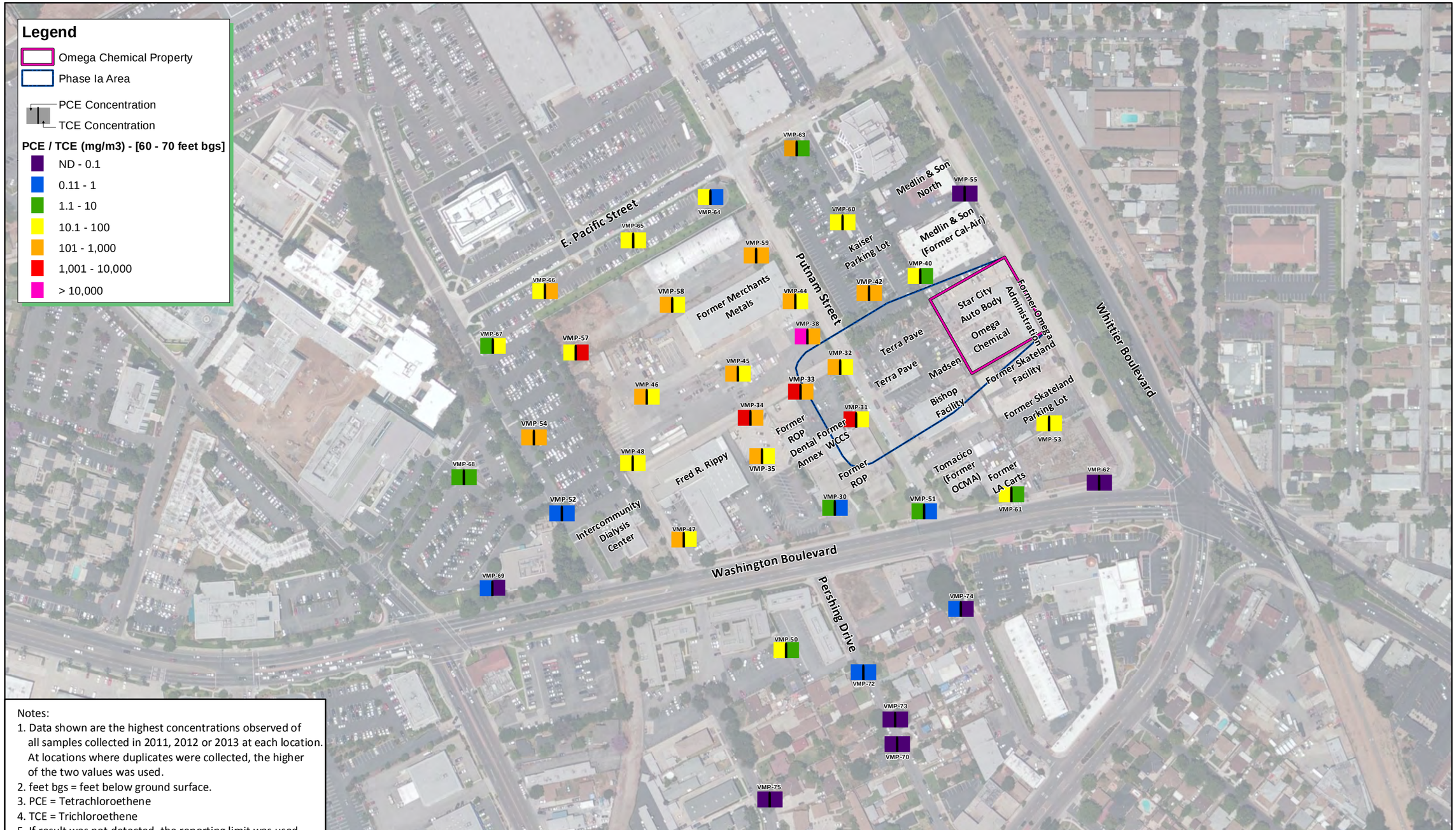


Notes:
1. Data shown are the highest concentrations observed of all samples collected in 2011, 2012 or 2013 at each location. At locations where duplicates were collected, the higher of the two values was used.
2. feet bgs = feet below ground surface.
3. PCE = Tetrachloroethene
4. TCE = Trichloroethene
5. If result was not detected, the reporting limit was used.

N

100 0 100
Feet

# Omega Chemical

Soil Gas Concentration Distribution (60 - 70 feet bgs)
Tetrachloroethene (PCE) and Trichloroethene (TCE)

**Figure 2-6**

CDM Smith

schellerka K:\10500_Omega\2013\PDR\Figure2-6_SoilConcentration(60-70ft)VOCs.mxd 7/31/2013

# Table 2-3
## Omega Chemical Superfund Site
## Volatile Organic Compounds (VOCs) Analytical Summary
## Vapor Monitoring Probe Analytical Results

| Sample Location / Depth (ft) | Sample Date | Sample Type | Analytical Method | 1,1,2,2-PCA | PCE | TCE | 1,1,1-TCA | 1,1,2-TCA | 1,1-DCE | 1,1-DCA | 1,2-DCA | cis-1,2-DCE | trans-1,2-DCE | CTC | CFM | CET | MC | Freon 11 | Freon 113 | Freon 12 | VC | ACT | BEN | TOL | EBN | MPX | OX | CDS | IPA | MEK |
|---|---|---|---|---|---|---|---|---|---|---|---|---|---|---|---|---|---|---|---|---|---|---|---|---|---|---|---|---|---|---|
| VMP-28 | | | | | | | | | | | | | | | | | | | | | | | | | | | | | | |
| 6 | 02/28/11 | ORIG | 8260B | 5 U | 160 | 4.2 | 5 U | 5 U | 8.6 | 5 U | 1 U | 5 U | 5 U | 1 U | 1 U | 5 U | 5 U | 5 U | 5 U | 5 U | 0.5 U | -- | 1 U | 10 U | 5 U | 5 U | 5 U | -- | -- | -- |
| 12 | 02/28/11 | ORIG | 8260B | 0.5 U | 260 | 6.5 | 0.5 U | 0.5 U | 28 | 0.5 U | 0.1 U | 0.5 U | 0.5 U | 0.1 U | 0.59 | 0.5 U | 0.5 U | 3.4 | 10 | 0.5 U | 0.05 U | -- | 0.1 U | 1 U | 0.5 U | 0.5 U | 0.5 U | -- | -- | -- |
| 24 | 02/28/11 | ORIG | 8260B | 5 U | 1700 | 47 | 5 U | 5 U | 520 | 5 U | 1 U | 5 U | 5 U | 1 U | 7.1 | 5 U | 5 U | 150 | 620 | 5 U | 0.5 U | -- | 1 U | 10 U | 5 U | 5 U | 5 U | -- | -- | -- |
| 55 | 02/28/11 | ORIG | 8260B | 5 U | 3400 | 120 | 5 U | 5 U | 740 | 5 U | 1 U | 5 U | 5 U | 1 U | 21 | 5 U | 5 U | 85 | 230 | 5 U | 0.5 U | -- | 1 U | 10 U | 5 U | 5 U | 5 U | -- | -- | -- |
| 40 | 03/09/11 | ORIG | 8260B | 0.5 U | 94 | 6.4 | 0.5 U | 0.5 U | 53 | 0.5 U | 0.1 U | 0.5 U | 0.5 U | 0.1 U | 0.91 | 0.5 U | 0.5 U | 1.7 | 1.8 | 0.5 U | 0.05 U | -- | 0.15 | 1 U | 0.5 U | 0.5 U | 0.5 U | -- | -- | -- |
| 40 | 03/09/11 | DUP | 8260B | 0.5 U | 110 | 6.5 | 0.5 U | 0.5 U | 45 | 0.5 U | 0.1 U | 0.5 U | 0.5 U | 0.1 U | 0.97 | 0.5 U | 0.5 U | 1.5 | 1.5 | 0.5 U | 0.05 U | -- | 0.16 | 1 U | 0.5 U | 0.5 U | 0.5 U | -- | -- | -- |
| VMP-29 | | | | | | | | | | | | | | | | | | | | | | | | | | | | | | |
| 6 | 02/28/11 | ORIG | 8260B | 5 U | 56 | 1.8 | 5 U | 5 U | 9.9 | 5 U | 1 U | 5 U | 5 U | 1 U | 1 U | 5 U | 5 U | 5 U | 10 | 5 U | 0.5 U | -- | 1 U | 10 U | 5 U | 5 U | 5 U | -- | -- | -- |
| 12 | 02/28/11 | ORIG | 8260B | 0.5 U | 26 | 1.8 | 0.5 U | 0.5 U | 4.6 | 0.5 U | 0.1 U | 0.5 U | 0.5 U | 0.1 U | 0.14 | 0.5 U | 0.5 U | 0.5 U | 1.2 | 0.5 U | 0.05 U | -- | 0.1 U | 1 U | 0.5 U | 0.5 U | 0.5 U | -- | -- | -- |
| 12 | 02/28/11 | DUP | 8260B | 0.5 U | 23 | 1.7 | 0.5 U | 0.5 U | 4.8 | 0.5 U | 0.1 U | 0.5 U | 0.5 U | 0.1 U | 0.11 | 0.5 U | 0.5 U | 0.5 U | 1.1 | 0.5 U | 0.05 U | -- | 0.1 U | 1 U | 0.5 U | 0.5 U | 0.5 U | -- | -- | -- |
| 24 | 02/28/11 | ORIG | 8260B | 5 U | 20 | 1.2 | 5 U | 5 U | 15 | 5 U | 1 U | 5 U | 5 U | 1 U | 1 U | 5 U | 5 U | 5 | 18 | 5 U | 0.5 U | -- | 1 U | 10 U | 5 U | 5 U | 5 U | -- | -- | -- |
| 55 | 02/28/11 | ORIG | 8260B | 5 U | 870 | 51 | 5 U | 5 U | 520 | 5 U | 1 U | 5 U | 5 U | 1 U | 5.1 | 5 U | 5 U | 73 | 210 | 5 U | 0.5 U | -- | 1 U | 10 U | 5 U | 5 U | 5 U | -- | -- | -- |
| VMP-30 | | | | | | | | | | | | | | | | | | | | | | | | | | | | | | |
| 6 | 02/28/11 | ORIG | 8260B | 0.5 U | 1.8 | 0.1 U | 0.5 U | 0.5 U | 0.97 | 0.5 U | 0.1 U | 0.5 U | 0.5 U | 0.1 U | 0.1 U | 0.5 U | 0.5 U | 0.5 U | 0.75 | 0.5 U | 0.05 U | -- | 0.1 U | 1 U | 0.5 U | 0.5 U | 0.5 U | -- | -- | -- |
| 12 | 02/28/11 | ORIG | 8260B | 0.5 U | 0.76 J | 0.1 U | 0.5 U | 0.5 U | 0.5 U | 0.5 U | 0.1 U | 0.5 U | 0.5 U | 0.1 U | 0.1 U | 0.5 U | 0.5 U | 0.5 U | 0.67 J | 0.5 U | 0.05 U | -- | 0.1 U | 1 U | 0.5 U | 0.5 U | 0.5 U | -- | -- | -- |
| 12 | 02/28/11 | CONF | TO-15 | 0.007 U | 0.44 J | 0.029 | 0.0055 U | 0.0055 U | 0.041 | 0.0041 U | 0.0041 U | 0.004 U | 0.008 U | 0.0064 U | 0.069 | 0.008 U | 0.0035 U | 0.026 | 0.13 J | 0.005 U | 0.0026 U | 0.042 | 0.04 | 0.31 | 0.061 | 0.24 | 0.082 | 0.54 | 0.025 U | 0.03 U |
| 24 | 02/28/11 | ORIG | 8260B | 0.5 U | 0.76 | 0.1 U | 0.5 U | 0.5 U | 0.93 | 0.5 U | 0.1 U | 0.5 U | 0.5 U | 0.1 U | 0.1 U | 0.5 U | 0.5 U | 2.6 | 25 | 0.5 U | 0.05 U | -- | 0.1 U | 1 U | 0.5 U | 0.5 U | 0.5 U | -- | -- | -- |
| 55 | 03/03/11 | ORIG | 8260B | 0.5 U | 2.2 | 0.1 U | 0.5 U | 0.5 U | 0.5 U | 0.5 U | 0.1 U | 0.5 U | 0.5 U | 0.1 U | 0.1 U | 0.5 U | 0.5 U | 0.5 U | 0.5 U | 0.5 U | 0.05 U | -- | 0.1 U | 1 U | 0.5 U | 0.5 U | 0.5 U | -- | -- | -- |
| 40 | 03/10/11 | ORIG | 8260B | 0.5 U | 9.2 | 0.22 | 0.5 U | 0.5 U | 0.5 U | 0.5 U | 0.1 U | 0.5 U | 0.5 U | 0.1 U | 0.1 U | 0.5 U | 0.5 U | 0.5 U | 1 | 0.5 U | 0.05 U | -- | 0.19 | 1 U | 0.5 U | 0.5 U | 0.5 U | -- | -- | -- |
| 60 | 03/10/11 | ORIG | 8260B | 0.5 U | 9.9 | 0.29 | 0.5 U | 0.5 U | 1 | 0.5 U | 0.1 U | 0.5 U | 0.5 U | 0.1 U | 0.1 U | 0.5 U | 0.5 U | 1.1 | 3.7 | 0.5 U | 0.05 U | -- | 0.11 | 1 U | 0.5 U | 0.5 U | 0.5 U | -- | -- | -- |
| 70 | 03/10/11 | ORIG | 8260B | 0.5 U | 7.1 | 0.22 J | 0.5 U | 0.5 U | 1.2 | 0.5 U | 0.1 U | 0.5 U | 0.5 U | 0.1 U | 0.1 U | 0.5 U | 0.5 U | 1.2 | 3.6 | 0.5 U | 0.05 U | -- | 0.15 | 1 U | 0.5 U | 0.5 U | 0.5 U | -- | -- | -- |
| 70 | 03/10/11 | DUP | 8260B | 0.5 U | 8.3 | 0.31 J | 0.5 U | 0.5 U | 1.1 | 0.5 U | 0.1 U | 0.5 U | 0.5 U | 0.1 U | 0.1 U | 0.5 U | 0.5 U | 1.1 | 3.2 | 0.5 U | 0.05 U | -- | 0.15 | 1 U | 0.5 U | 0.5 U | 0.5 U | -- | -- | -- |
| VMP-31 | | | | | | | | | | | | | | | | | | | | | | | | | | | | | | |
| 6 | 03/03/11 | ORIG | 8260B | 0.5 U | 2.5 | 0.1 U | 0.5 U | 0.5 U | 0.5 U | 0.5 U | 0.1 U | 0.5 U | 0.5 U | 0.1 U | 0.1 U | 0.5 U | 0.5 U | 0.5 U | 0.5 U | 0.5 U | 0.05 U | -- | 0.1 U | 1 U | 0.5 U | 0.5 U | 0.5 U | -- | -- | -- |
| 12 | 03/03/11 | ORIG | 8260B | 0.5 U | 0.16 | 0.1 U | 0.5 U | 0.5 U | 0.5 U | 0.5 U | 0.1 U | 0.5 U | 0.5 U | 0.1 U | 0.1 U | 0.5 U | 0.5 U | 0.5 U | 0.5 U | 0.5 U | 0.05 U | -- | 0.1 U | 1 U | 0.5 U | 0.5 U | 0.5 U | -- | -- | -- |
| 24 | 03/03/11 | ORIG | 8260B | 0.5 U | 0.17 | 0.1 U | 0.5 U | 0.5 U | 0.5 U | 0.5 U | 0.1 U | 0.5 U | 0.5 U | 0.1 U | 0.1 U | 0.5 U | 0.5 U | 0.5 U | 0.5 U | 0.5 U | 0.05 U | -- | 0.1 U | 1 U | 0.5 U | 0.5 U | 0.5 U | -- | -- | -- |
| 55 | 03/03/11 | ORIG | 8260B | 20 U | 1400 | 56 | 20 U | 20 U | 200 | 20 U | 4 U | 20 U | 20 U | 4 U | 18 | 20 U | 20 U | 47 | 240 | 20 U | 2 U | -- | 4 U | 40 U | 20 U | 20 U | 20 U | -- | -- | -- |
| 40 | 03/09/11 | ORIG | 8260B | 1 U | 41 | 0.2 U | 1 U | 1 U | 1 U | 1 U | 0.2 U | 1 U | 1 U | 0.2 U | 0.2 U | 1 U | 1 U | 1 U | 1 U | 1 U | 0.1 U | -- | 0.2 U | 2 U | 1 U | 1 U | 1 U | -- | -- | -- |
| 60 | 03/09/11 | ORIG | 8260B | 1 U | 52 | 1.4 | 1 U | 1 U | 1.4 | 1 U | 0.2 U | 1 U | 1 U | 0.2 U | 0.24 | 1 U | 1 U | 1 U | 1 U | 1 U | 0.1 U | -- | 0.2 U | 2 U | 1 U | 1 U | 1 U | -- | -- | -- |
| 70 | 03/09/11 | ORIG | 8260B | 10 U | 1200 | 67 | 10 U | 10 U | 210 | 10 U | 2 U | 10 U | 10 U | 2 U | 29 | 10 U | 10 U | 29 | 150 | 10 U | 1 U | -- | 2 U | 20 U | 10 U | 10 U | 10 U | -- | -- | -- |
| VMP-32 | | | | | | | | | | | | | | | | | | | | | | | | | | | | | | |
| 6 | 03/03/11 | ORIG | 8260B | 0.5 U | 34 | 0.17 | 0.5 U | 0.5 U | 0.5 U | 0.5 U | 0.1 U | 0.5 U | 0.5 U | 0.1 U | 0.1 U | 0.5 U | 0.5 U | 0.5 U | 0.98 | 0.5 U | 0.05 U | -- | 0.1 U | 1 U | 0.5 U | 0.5 U | 0.5 U | -- | -- | -- |
| 12 | 03/03/11 | ORIG | 8260B | 0.5 U | 22 | 0.69 | 0.5 U | 0.5 U | 3.9 | 0.5 U | 0.1 U | 0.5 U | 0.5 U | 0.1 U | 0.1 U | 0.5 U | 0.5 U | 3.4 | 19 | 0.5 U | 0.05 U | -- | 0.1 U | 1 U | 0.5 U | 0.5 U | 0.5 U | -- | -- | -- |
| 24 | 03/03/11 | ORIG | 8260B | 0.5 U | 7.7 | 0.29 | 0.5 U | 0.5 U | 2.3 | 0.5 U | 0.1 U | 0.5 U | 0.5 U | 0.1 U | 0.1 U | 0.5 U | 0.5 U | 2.1 | 14 | 0.5 U | 0.05 U | -- | 0.1 U | 1 U | 0.5 U | 0.5 U | 0.5 U | -- | -- | -- |
| 55 | 03/03/11 | ORIG | 8260B | 5 U | 1900 | 140 | 5 U | 5 U | 430 | 5 U | 1 U | 5 U | 5 U | 1 U | 20 | 5 U | 5 U | 93 | 520 | 5 U | 0.5 U | -- | 1 U | 10 U | 5 U | 5 U | 5 U | -- | -- | -- |
| 40 | 03/09/11 | ORIG | 8260B | 10 U | 4800 | 210 | 10 U | 10 U | 960 | 10 U | 2 U | 10 U | 10 U | 2 U | 29 | 10 U | 10 U | 240 | 1600 | 10 U | 1 U | -- | 2 U | 20 U | 10 U | 10 U | 10 U | -- | -- | -- |
| 60 | 03/09/11 | ORIG | 8260B | 20 U | 310 J | 11 J | 20 U | 20 U | 45 J | 20 U | 4 U | 20 U | 20 U | 4 U | 4 U | 20 U | 20 U | 20 U | 87 J | 20 U | 2 U | -- | 4 U | 40 U | 20 U | 20 U | 20 U | -- | -- | -- |
| 60 | 03/09/11 | CONF | TO-15 | 0.37 U | 79 J | 3.4 J | 0.3 U | 0.3 U | 4.4 J | 0.22 U | 0.22 U | 0.21 U | 0.21 U | 0.34 U | 0.94 | 0.14 U | 0.19 U | 0.89 | 3.9 J | 0.27 U | 0.14 U | 0.39 J | 0.17 | 0.11 J | 0.24 U | 0.082 J | 0.024 J | 0.23 J | 0.67 U | 0.16 U |
| 70 | 03/09/11 | ORIG | 8260B | 5 U | 170 | 7.8 | 5 U | 5 U | 18 | 5 U | 1 U | 5 U | 5 U | 1 U | 2.7 | 5 U | 5 U | 16 | 96 | 5 U | 0.5 U | -- | 1 U | 10 U | 5 U | 5 U | 5 U | -- | -- | -- |
| VMP-33 | | | | | | | | | | | | | | | | | | | | | | | | | | | | | | |
| 6 | 03/03/11 | ORIG | TO-15 | 0.7 U | 39 | 0.73 | 0.55 U | 0.55 U | 0.4 U | 0.82 U | 0.41 U | 0.8 U | 0.8 U | 0.26 U | 0.5 U | 0.54 U | 0.35 U | 0.57 U | 0.77 U | 0.5 U | 0.26 U | 2.1 | 0.32 U | 0.38 U | 0.44 U | 0.88 U | 0.44 U | 0.32 U | 0.5 U | 0.6 U |
| 6 | 03/03/11 | ORIG | 8260B | 0.5 U | 49 | 0.64 | 0.5 U | 0.5 U | 0.5 U | 0.5 U | 0.1 U | 0.5 U | 0.5 U | 0.1 U | 0.1 U | 0.5 U | 0.5 U | 0.5 U | 0.5 U | 0.5 U | 0.05 U | -- | 0.1 U | 1 U | 0.5 U | 0.5 U | 0.5 U | -- | -- | -- |
| 12 | 03/03/11 | ORIG | 8260B | 0.5 U | 23 | 0.1 U | 0.5 U | 0.5 U | 0.5 U | 0.5 U | 0.1 U | 0.5 U | 0.5 U | 0.1 U | 0.1 U | 0.5 U | 0.5 U | 0.5 U | 0.5 U | 0.5 U | 0.05 U | -- | 0.1 U | 1 U | 0.5 U | 0.5 U | 0.5 U | -- | -- | -- |
| 24 | 03/03/11 | ORIG | 8260B | 0.5 U | 89 | 3.5 | 0.5 U | 0.5 U | 0.96 | 0.5 U | 0.1 U | 0.5 U | 0.5 U | 0.1 U | 0.69 | 0.5 U | 0.5 U | 0.5 U | 0.5 U | 0.5 U | 0.05 U | -- | 0.1 U | 1 U | 0.5 U | 0.5 U | 0.5 U | -- | -- | -- |
| 24 | 03/03/11 | DUP | 8260B | 0.5 U | 97 | 3.7 | 0.5 U | 0.5 U | 1 | 0.5 U | 0.1 U | 0.5 U | 0.5 U | 0.1 U | 0.69 | 0.5 U | 0.5 U | 0.5 U | 0.5 U | 0.5 U | 0.05 U | -- | 0.11 | 1 U | 0.5 U | 0.5 U | 0.5 U | -- | -- | -- |
| 55 | 03/03/11 | ORIG | 8260B | 10 U | 3600 | 150 | 10 U | 10 U | 800 | 10 U | 2 U | 10 U | 10 U | 2 U | 23 | 10 U | 10 U | 200 | 1100 | 10 U | 1 U | -- | 2 U | 20 U | 10 U | 10 U | 10 U | -- | -- | -- |
| 40 | 03/09/11 | ORIG | 8260B | 10 U | 1900 | 120 | 10 U | 10 U | 390 | 10 U | 2 U | 10 U | 10 U | 2 U | 24 | 10 U | 10 U | 84 | 430 | 10 U | 1 U | -- | 2 U | 20 U | 10 U | 10 U | 10 U | -- | -- | -- |
| 60 | 03/09/11 | ORIG | 8260B | 10 U | 5100 | 190 | 10 U | 10 U | 1200 | 10 U | 2 U | 10 U | 10 U | 2 U | 31 | 10 U | 10 U | 360 | 4700 | 10 U | 1 U | -- | 2 U | 20 U | 10 U | 10 U | 10 U | -- | -- | -- |
| VMP-34 | | | | | | | | | | | | | | | | | | | | | | | | | | | | | | |
| 6 | 03/04/11 | ORIG | 8260B | 0.5 U | 620 | 41 | 0.5 U | 0.5 U | 260 | 0.5 U | 0.1 U | 0.5 U | 0.5 U | 0.1 U | 2.2 | 0.5 U | 0.5 U | 67 | 440 | 0.5 U | 0.05 U | -- | 0.1 U | 1 U | 0.5 U | 0.5 U | 0.5 U | -- | -- | -- |
| 12 | 03/04/11 | ORIG | 8260B | 10 U | 590 | 40 | 10 U | 10 U | 250 | 10 U | 2 U | 10 U | 10 U | 2 U | 3.4 | 10 U | 10 U | 100 | 410 | 10 U | 1 U | -- | 2 U | 20 U | 10 U | 10 U | 10 U | -- | -- | -- |
| 24 | 03/04/11 | ORIG | 8260B | 10 U | 190 | 22 | 10 U | 10 U | 160 | 10 U | 2 U | 10 U | 10 U | 2 U | 7.2 | 10 U | 10 U | 44 | 130 | 10 U | 1 U | -- | 2 U | 20 U | 10 U | 10 U | 10 U | -- | -- | -- |
| 55 | 03/04/11 | ORIG | 8260B | 20 U | 3900 | 180 | 20 U | 20 U | 810 | 20 U | 4 U | 20 U | 20 U | 4 U | 110 | 20 U | 20 U | 170 | 520 | 20 U | 2 U | -- | 4 U | 40 U | 20 U | 20 U | 20 U | -- | -- | -- |
| 40 | 03/09/11 | ORIG | 8260B | 5 U | 2300 | 280 | 5 U | 5 U | 960 | 5 U | 1 U | 5 U | 5 U | 1 U | 120 | 5 U | 5 U | 250 | 880 | 5 U | 0.5 U | -- | 1 U | 10 U | 5 U | 5 U | 5 U | -- | -- | -- |
| 60 | 03/09/11 | ORIG | 8260B | 10 U | 4500 | 280 | 10 U | 10 U | 1300 | 10 U | 2 U | 10 U | 10 U | 2 U | 140 | 10 U | 10 U | 280 | 980 | 10 U | 1 U | -- | 2 U | 20 U | 10 U | 10 U | 10 U | -- | -- | -- |
| 70 | 03/09/11 | ORIG | 8260B | 10 U | 2800 | 190 | 10 U | 10 U | 870 | 10 U | 5.3 | 10 U | 10 U | 2 U | 140 | 10 U | 10 U | 150 | 370 | 10 U | 1 U | -- | 2 U | 20 U | 10 U | 10 U | 10 U | -- | -- | -- |
| VMP-35 | | | | | | | | | | | | | | | | | | | | | | | | | | | | | | |
| 6 | 03/04/11 | ORIG | 8260B | 0.5 U | 30 | 1.9 | 0.5 U | 0.5 U | 9 | 0.5 U | 0.1 U | 0.5 U | 0.5 U | 0.1 U | 0.32 | 0.5 U | 0.5 U | 2.3 | 6.2 | 0.5 U | 0.05 U | -- | 0.1 U | 1 U | 0.5 U | 0.5 U | 0.5 U | -- | -- | -- |
| 12 | 03/04/11 | ORIG | 8260B | 0.5 U | 40 | 2.6 | 0.5 U | 0.5 U | 12 | 0.5 U | 0.1 U | 0.5 U | 0.5 U | 0.1 U | 0.45 | 0.5 U | 0.5 U | 2.6 | 7.1 | 0.5 U | 0.05 U | -- | 0.1 U | 1 U | 0.5 U | 0.5 U | 0.5 U | -- | -- | -- |
| 12 | 03/04/11 | DUP | 8260B | 0.5 U | 38 | 2.4 | 0.5 U | 0.5 U | 11 | 0.5 U | 0.1 U | 0.5 U | 0.5 U | 0.1 U | 0.4 | 0.5 U | 0.5 U | 2.7 | 6.8 | 0.5 U | 0.05 U | -- | 0.1 U | 1 U | 0.5 U | 0.5 U | 0.5 U | -- | -- | -- |
| 24 | 03/04/11 | ORIG | 8260B | 1 U | 9.1 | 0.95 | 1 U | 1 U | 7.1 | 1 U | 0.2 U | 1 U | 1 U | 0.2 U | 0.45 | 1 U | 1 U | 1.8 | 4.5 | 1 U | 0.1 U | -- | 0.2 U | 2 U | 1 U | 1 U | 1 U | -- | -- | -- |
| 55 | 03/04/11 | ORIG | 8260B | 0.5 U | 1500 | 90 | 0.5 U | 0.5 U | 460 | 1.8 | 1.4 | 0.5 U | 1.1 | 0.1 U | 50 | 0.5 U | 0.5 U | 60 | 170 | 0.5 U | 0.05 U | -- | 0.1 U | 1 U | 0.5 U | 0.5 U | 0.5 U | -- | -- | -- |
| 40 | 03/09/11 | ORIG | 8260B | 0.5 U | 21 | 5.2 | 0.5 U | 0.5 U | 77 | 0.5 U | 0.1 U | 0.5 U | 0.5 U | 0.1 U | 7.3 | 0.5 U | 0.5 U | 10 | 23 | 0.5 U | 0.05 U | -- | 0.17 | 1 U | 0.5 U | 0.5 U | 0.5 U | -- | -- | -- |
| 60 | 03/09/11 | ORIG | 8260B | 0.5 U | 410 | 44 | 0.5 U | 0.5 U | 550 | 1.3 | 0.82 | 0.5 U | 0.7 | 0.1 U | 26 | 0.5 U | 0.5 U | 48 | 210 | 0.5 U | 0.05 U | -- | 0.24 | 1 U | 0.5 U | 0.5 U | 0.5 U | -- | -- | -- |
| VMP-36 | | | | | | | | | | | | | | | | | | | | | | | | | | | | | | |
| 55 | 03/03/11 | ORIG | 8260B | 10 U | 770 | 35 | 10 U | 10 U | 180 | 10 U | 2 U | 10 U | 10 U | 2 U | 6.2 | 10 U | 10 U | 19 | 52 | 10 U | 1 U | -- | 2 U | 20 U | 10 U | 10 U | 10 U | -- | -- | -- |
| 6 | 03/04/11 | ORIG | 8260B | 0.5 U | 180 | 9.2 | 0.5 U | 0.5 U | 37 | 0.5 U | 0.1 U | 0.5 U | 0.5 U | 0.1 U | 1.6 | 0.5 U | 0.5 U | 4.2 | 15 | 0.5 U | 0.05 U | -- | 0.1 U | 1 U | 0.5 U | 0.5 U | 0.5 U | -- | -- | -- |
| 12 | 03/04/11 | ORIG | 8260B | 0.5 U | 34 | 2 | 0.5 U | 0.5 U | 9.5 | 0.5 U | 0.1 U | 0.5 U | 0.5 U | 0.1 U | 0.32 | 0.5 U | 0.5 U | 1.4 | 4.2 | 0.5 U | 0.05 U | -- | 0.1 U | 1 U | 0.5 U | 0.5 U | 0.5 U | -- | -- | -- |
| 24 | 03/04/11 | ORIG | 8260B | 0.5 U | 0.99 | 0.1 U | 0.5 U | 0.5 U | 0.5 U | 0.5 U | 0.1 U | 0.5 U | 0.5 U | 0.1 U | 0.1 U | 0.5 U | 0.5 U | 0.5 U | 0.5 U | 0.5 U | 0.05 U | -- | 0.1 U | 1 U | 0.5 U | 0.5 U | 0.5 U | -- | -- | -- |

# Table 2-3
# Omega Chemical Superfund Site
# Volatile Organic Compounds (VOCs) Analytical Summary
# Vapor Monitoring Probe Analytical Results

| Sample Location / Depth (ft) | Sample Date | Sample Type | Analytical Method | 1,1,2,2-PCA | PCE | TCE | 1,1,1-TCA | 1,1,2-TCA | 1,1-DCE | 1,1-DCA | 1,2-DCA | cis-1,2-DCE | trans-1,2-DCE | CTC | CFM | CET | MC | Freon 11 | Freon 113 | Freon 12 | VC | ACT | BEN | TOL | EBN | MPX | OX | CDS | IPA | MEK |
|---|---|---|---|---|---|---|---|---|---|---|---|---|---|---|---|---|---|---|---|---|---|---|---|---|---|---|---|---|---|---|
| VMP-37 | | | | | | | | | | | | | | | | | | | | | | | | | | | | | | |
| 6 | 03/10/11 | ORIG | 8260B | 0.5 U | 17 | 0.39 J | 0.5 U | 0.5 U | 0.5 U | 0.5 U | 0.1 U | 0.5 U | 0.5 U | 0.1 U | 0.11 J | 0.5 U | 0.5 U | 0.5 U | 0.5 U | 0.5 U | 0.05 U | -- | 0.11 | 1 U | 0.5 U | 0.5 U | 0.5 U | -- | -- | -- |
| 6 | 03/10/11 | CONF | TO-15 | 0.077 U | 17 | 0.67 J | 0.061 U | 0.061 U | 0.64 | 0.045 U | 0.045 U | 0.045 U | 0.045 U | 0.071 U | 0.15 J | 0.03 U | 0.039 U | 0.14 | 0.96 | 0.056 U | 0.029 U | 0.25 J | 0.14 | 0.075 | 0.028 J | 0.13 | 0.053 | 0.074 J | 0.14 U | 0.032 J |
| 12 | 03/10/11 | ORIG | 8260B | 0.5 U | 6.5 | 0.1 U | 0.5 U | 0.5 U | 0.5 U | 0.5 U | 0.1 U | 0.5 U | 0.5 U | 0.1 U | 0.1 U | 0.5 U | 0.5 U | 0.5 U | 0.5 U | 0.5 U | 0.05 U | -- | 0.1 U | 1 U | 0.5 U | 0.5 U | 0.5 U | -- | -- | -- |
| 24 | 03/10/11 | ORIG | 8260B | 0.5 U | 6.1 | 0.26 | 0.5 U | 0.5 U | 0.5 U | 0.5 U | 0.1 U | 0.5 U | 0.5 U | 0.1 U | 0.1 U | 0.5 U | 0.5 U | 0.5 U | 0.5 U | 0.5 U | 0.05 U | -- | 0.1 U | 1 U | 0.5 U | 0.5 U | 0.5 U | -- | -- | -- |
| 55 | 03/11/11 | ORIG | 8260B | 0.5 U | 190 J | 2.5 J | 0.5 U | 0.5 U | 11 | 0.5 U | 0.1 U | 0.5 U | 0.5 U | 0.1 U | 0.1 U | 0.5 U | 0.5 U | 0.65 | 2.6 | 0.5 U | 0.05 U | -- | 0.1 U | 1 U | 0.5 U | 0.5 U | 0.5 U | -- | -- | -- |
| 55 | 03/11/11 | CONF | TO-15 | 0.23 U | 46 J | 1.7 J | 0.18 U | 0.18 U | 8.8 | 0.14 U | 0.14 U | 0.13 U | 0.13 U | 0.21 U | 0.039 J | 0.089 U | 0.12 U | 0.58 | 2.1 | 0.17 U | 0.086 U | 0.26 J | 0.031 J | 0.078 J | 0.15 U | 0.052 J | 0.014 J | 0.075 J | 0.41 U | 0.099 U |
| VMP-38 | | | | | | | | | | | | | | | | | | | | | | | | | | | | | | |
| 6 | 03/04/11 | ORIG | 8260B | 0.5 U | 770 | 52 | 0.5 U | 0.5 U | 550 | 0.5 U | 0.1 U | 0.5 U | 0.5 U | 0.1 U | 0.27 | 0.5 U | 0.5 U | 180 | 1100 | 0.95 | 0.05 U | -- | 0.1 U | 1 U | 0.5 U | 0.5 U | 0.5 U | -- | -- | -- |
| 12 | 03/04/11 | ORIG | 8260B | 10 U | 1200 J | 69 J | 10 U | 10 U | 910 J | 10 U | 2 U | 10 U | 10 U | 2 U | 2 U | 10 U | 10 U | 290 J | 1900 J | 10 U | 1 U | -- | 2 U | 20 U | 10 U | 10 U | 10 U | -- | -- | -- |
| 12 | 03/04/11 | CONF | TO-15 | 4.8 U | 470 J | 40 J | 3.8 U | 3.8 U | 430 J | 2.8 U | 2.8 U | 2.8 U | 2.8 U | 4.4 U | 3.4 U | 1.8 U | 2.4 U | 160 J | 950 J | 1 J | 1.8 U | 4.1 J | 0.72 J | 1.1 J | 3 U | 0.89 J | 3 U | 1.5 J | 8.6 U | 2.1 U |
| 24 | 03/04/11 | ORIG | TO-15 | 7 U | 470 J | 48 J | 5.5 U | 5.5 U | 540 J | 8.2 U | 4.1 U | 8 U | 8 U | 2.6 U | 5 U | 5.4 U | 3.5 U | 200 J | 1200 J | 5 U | 2.6 U | 730 | 3.2 U | 3.8 U | 4.4 U | 8.8 U | 4.4 U | 3.2 U | -- | 6 U |
| 24 | 03/04/11 | ORIG | 8260B | 10 U | 980 J | 74 J | 10 U | 10 U | 1000 J | 10 U | 2 U | 10 U | 10 U | 2 U | 2 U | 10 U | 10 U | 290 J | 1900 J | 10 U | 1 U | -- | 2 U | 20 U | 10 U | 10 U | 10 U | -- | -- | -- |
| 55 | 03/04/11 | ORIG | 8260B | 20 U | 3200 | 150 | 20 U | 20 U | 1500 | 20 U | 4 U | 20 U | 20 U | 4 U | 4.7 | 20 U | 20 U | 530 | 3800 | 20 U | 2 U | -- | 4 U | 40 U | 20 U | 20 U | 20 U | -- | -- | -- |
| 40 | 03/10/11 | ORIG | 8260B | 10 U | 150 | 17 | 10 U | 10 U | 200 | 10 U | 2 U | 10 U | 10 U | 2 U | 2 U | 10 U | 10 U | 35 | 94 | 10 U | 1 U | -- | 2 U | 20 U | 10 U | 10 U | 10 U | -- | -- | -- |
| 60 | 03/10/11 | ORIG | 8260B | 10 U | 7500 | 150 | 10 U | 10 U | 1500 | 10 U | 2 U | 10 U | 10 U | 2 U | 5 | 10 U | 10 U | 540 | 13000 | 10 U | 1 U | -- | 2 U | 20 U | 10 U | 10 U | 10 U | -- | -- | -- |
| 70 | 03/10/11 | ORIG | 8260B | 10 U | 24000 | 190 | 10 U | 10 U | 1800 | 10 U | 2 U | 10 U | 10 U | 2 U | 6.3 | 10 U | 10 U | 650 | 36000 | 10 U | 1 U | -- | 2 U | 20 U | 10 U | 10 U | 10 U | -- | -- | -- |
| VMP-39 | | | | | | | | | | | | | | | | | | | | | | | | | | | | | | |
| 6 | 03/10/11 | ORIG | 8260B | 0.5 U | 33 | 7.6 | 0.5 U | 0.5 U | 8.6 | 0.5 U | 0.1 U | 0.5 U | 0.5 U | 0.1 U | 0.1 U | 0.5 U | 0.5 U | 1.1 | 2.8 | 0.5 U | 0.05 U | -- | 0.1 U | 1 U | 0.5 U | 0.5 U | 0.5 U | -- | -- | -- |
| 12 | 03/10/11 | ORIG | 8260B | 0.5 U | 46 | 8.1 | 0.5 U | 0.5 U | 9.9 | 0.5 U | 0.1 U | 0.5 U | 0.5 U | 0.1 U | 0.1 U | 0.5 U | 0.5 U | 1.4 | 3.5 | 0.5 U | 0.05 U | -- | 0.1 U | 1 U | 0.5 U | 0.5 U | 0.5 U | -- | -- | -- |
| 24 | 03/10/11 | ORIG | 8260B | 0.5 U | 31 | 11 | 0.5 U | 0.5 U | 13 | 0.5 U | 0.1 U | 0.5 U | 0.5 U | 0.1 U | 0.1 U | 0.5 U | 0.5 U | 2.4 | 6.3 | 0.5 U | 0.05 U | -- | 0.15 | 1 U | 0.5 U | 0.5 U | 0.5 U | -- | -- | -- |
| 55 | 03/11/11 | ORIG | 8260B | 1 U | 79 J | 39 J | 1 U | 1 U | 29 | 1 U | 0.2 U | 1 U | 1 U | 0.2 U | 0.2 U | 1 U | 1 U | 3.4 | 8 | 1 U | 0.1 U | -- | 0.2 U | 2 U | 1 U | 1 U | 1 U | -- | -- | -- |
| 55 | 03/11/11 | CONF | TO-15 | 0.28 U | 51 J | 28 J | 0.22 U | 0.22 U | 29 | 0.16 U | 0.16 U | 0.16 U | 0.16 U | 0.25 U | 0.1 J | 0.11 U | 0.14 U | 3.6 | 8.1 | 0.023 J | 0.1 U | 0.33 J | 0.051 J | 0.058 J | 0.18 U | 0.18 U | 0.18 U | 0.63 U | 0.5 U | 0.12 U |
| VMP-40 | | | | | | | | | | | | | | | | | | | | | | | | | | | | | | |
| 6 | 03/11/11 | ORIG | 8260B | 0.5 U | 5.9 | 0.43 | 0.5 U | 0.5 U | 0.5 U | 0.5 U | 0.1 U | 0.5 U | 0.5 U | 0.1 U | 0.1 U | 0.5 U | 0.5 U | 0.5 U | 0.5 U | 0.5 U | 0.05 U | -- | 0.1 U | 1 U | 0.5 U | 0.5 U | 0.5 U | -- | -- | -- |
| 12 | 03/11/11 | ORIG | 8260B | 0.5 U | 4.2 | 0.13 | 0.5 U | 0.5 U | 0.5 U | 0.5 U | 0.1 U | 0.5 U | 0.5 U | 0.1 U | 0.1 U | 0.5 U | 0.5 U | 0.5 U | 0.5 U | 0.5 U | 0.05 U | -- | 0.1 U | 1 U | 0.5 U | 0.5 U | 0.5 U | -- | -- | -- |
| 24 | 03/11/11 | ORIG | 8260B | 0.5 U | 3.8 | 0.13 | 0.5 U | 0.5 U | 0.5 U | 0.5 U | 0.1 U | 0.5 U | 0.5 U | 0.1 U | 0.1 U | 0.5 U | 0.5 U | 0.5 U | 0.5 U | 0.5 U | 0.05 U | -- | 0.1 U | 1 U | 0.5 U | 0.5 U | 0.5 U | -- | -- | -- |
| 55 | 03/11/11 | ORIG | 8260B | 0.5 U | 6.2 | 0.5 | 0.5 U | 0.5 U | 0.5 U | 0.5 U | 0.1 U | 0.5 U | 0.5 U | 0.1 U | 0.1 U | 0.5 U | 0.5 U | 0.5 U | 0.5 U | 0.5 U | 0.05 U | -- | 0.1 U | 1 U | 0.5 U | 0.5 U | 0.5 U | -- | -- | -- |
| 70 | 03/11/11 | ORIG | 8260B | 1 U | 17 | 3.7 | 1 U | 1 U | 3.3 | 1 U | 0.2 U | 1 U | 1 U | 0.2 U | 0.2 U | 1 U | 1 U | 1 U | 1 U | 1 U | 0.1 U | -- | 0.2 U | 2 U | 1 U | 1 U | 1 U | -- | -- | -- |
| VMP-41 | | | | | | | | | | | | | | | | | | | | | | | | | | | | | | |
| 6 | 03/10/11 | ORIG | 8260B | 0.5 U | 10 | 0.32 | 0.5 U | 0.5 U | 0.5 U | 0.5 U | 0.1 U | 0.5 U | 0.5 U | 0.1 U | 0.1 U | 0.5 U | 0.5 U | 0.5 U | 0.5 U | 0.5 U | 0.05 U | -- | 0.1 U | 1 U | 0.5 U | 0.5 U | 0.5 U | -- | -- | -- |
| 12 | 03/10/11 | ORIG | 8260B | 0.5 U | 14 | 0.6 | 0.5 U | 0.5 U | 0.5 U | 0.5 U | 0.1 U | 0.5 U | 0.5 U | 0.1 U | 0.1 U | 0.5 U | 0.5 U | 0.5 U | 0.5 U | 0.5 U | 0.05 U | -- | 0.1 U | 1 U | 0.5 U | 0.5 U | 0.5 U | -- | -- | -- |
| 24 | 03/11/11 | ORIG | 8260B | 0.5 U | 4.9 | 0.26 | 0.5 U | 0.5 U | 0.5 U | 0.5 U | 0.1 U | 0.5 U | 0.5 U | 0.1 U | 0.1 U | 0.5 U | 0.5 U | 0.5 U | 0.5 U | 0.5 U | 0.05 U | -- | 0.1 U | 1 U | 0.5 U | 0.5 U | 0.5 U | -- | -- | -- |
| 55 | 03/11/11 | ORIG | 8260B | 0.5 U | 0.7 | 0.21 | 0.5 U | 0.5 U | 0.5 U | 0.5 U | 0.1 U | 0.5 U | 0.5 U | 0.1 U | 0.1 U | 0.5 U | 0.5 U | 0.5 U | 0.5 U | 0.5 U | 0.05 U | -- | 0.1 U | 1 U | 0.5 U | 0.5 U | 0.5 U | -- | -- | -- |
| 55 | 03/11/11 | DUP | 8260B | 0.5 U | 0.68 | 0.18 | 0.5 U | 0.5 U | 0.5 U | 0.5 U | 0.1 U | 0.5 U | 0.5 U | 0.1 U | 0.1 U | 0.5 U | 0.5 U | 0.5 U | 0.5 U | 0.5 U | 0.05 U | -- | 0.1 U | 1 U | 0.5 U | 0.5 U | 0.5 U | -- | -- | -- |
| VMP-42 | | | | | | | | | | | | | | | | | | | | | | | | | | | | | | |
| 6 | 03/16/11 | ORIG | 8260B | 0.5 U | 230 | 44 | 0.5 U | 0.5 U | 140 | 0.5 U | 0.1 U | 0.5 U | 0.5 U | 0.1 U | 0.1 U | 0.5 U | 0.5 U | 15 | 57 | 0.5 U | 0.05 U | -- | 0.1 U | 1 U | 0.5 U | 0.5 U | 0.5 U | -- | -- | -- |
| 12 | 03/16/11 | ORIG | 8260B | 0.5 U | 390 | 63 | 0.5 U | 0.5 U | 160 | 0.5 U | 0.1 U | 0.5 U | 0.5 U | 0.1 U | 0.11 | 0.5 U | 0.5 U | 14 | 55 | 0.5 U | 0.05 U | -- | 0.1 U | 1 U | 0.5 U | 0.5 U | 0.5 U | -- | -- | -- |
| 24 | 03/16/11 | ORIG | 8260B | 0.5 U | 42 | 7 | 0.5 U | 0.5 U | 16 | 0.5 U | 0.1 U | 0.5 U | 0.5 U | 0.1 U | 0.1 U | 0.5 U | 0.5 U | 2.3 | 8.3 | 0.5 U | 0.05 U | -- | 0.1 U | 1 U | 0.5 U | 0.5 U | 0.5 U | -- | -- | -- |
| 40 | 03/16/11 | ORIG | 8260B | 0.5 U | 4200 | 400 | 0.5 U | 0.5 U | 1300 | 2.6 | 0.1 U | 0.5 U | 0.57 | 0.1 U | 2.3 | 0.5 U | 0.5 U | 260 | 1200 | 0.5 U | 0.05 U | -- | 0.24 | 1 U | 0.5 U | 0.5 U | 0.5 U | -- | -- | -- |
| 60 | 03/16/11 | ORIG | 8260B | 0.5 U | 540 | 130 | 0.5 U | 0.5 U | 640 | 0.88 | 0.1 U | 0.5 U | 0.5 U | 0.1 U | 0.51 | 0.5 U | 0.5 U | 140 | 610 | 0.5 U | 0.05 U | -- | 0.16 | 1 U | 0.5 U | 0.5 U | 0.5 U | -- | -- | -- |
| 55 | 03/18/11 | ORIG | 8260B | 10 U | 260 | 26 | 10 U | 10 U | 80 | 10 U | 2 U | 10 U | 10 U | 2 U | 2 U | 10 U | 10 U | 32 | 190 | 10 U | 1 U | -- | 2 U | 20 U | 10 U | 10 U | 10 U | -- | -- | -- |
| VMP-43 | | | | | | | | | | | | | | | | | | | | | | | | | | | | | | |
| 6 | 03/16/11 | ORIG | 8260B | 0.5 U | 5.3 | 0.31 | 0.5 U | 0.5 U | 0.5 U | 0.5 U | 0.1 U | 0.5 U | 0.5 U | 0.1 U | 0.1 U | 0.5 U | 0.5 U | 0.5 U | 0.5 U | 0.5 U | 0.05 U | -- | 0.1 U | 1 U | 0.5 U | 0.5 U | 0.5 U | -- | -- | -- |
| 12 | 03/16/11 | ORIG | 8260B | 0.5 U | 4.2 | 0.26 | 0.5 U | 0.5 U | 0.5 U | 0.5 U | 0.1 U | 0.5 U | 0.5 U | 0.1 U | 0.1 U | 0.5 U | 0.5 U | 0.5 U | 0.5 U | 0.5 U | 0.05 U | -- | 0.1 U | 1 U | 0.5 U | 0.5 U | 0.5 U | -- | -- | -- |
| 24 | 03/16/11 | ORIG | 8260B | 0.5 U | 10 | 0.96 | 0.5 U | 0.5 U | 0.68 | 0.5 U | 0.1 U | 0.5 U | 0.5 U | 0.1 U | 0.1 U | 0.5 U | 0.5 U | 0.5 U | 0.5 U | 0.5 U | 0.05 U | -- | 0.1 U | 1 U | 0.5 U | 0.5 U | 0.5 U | -- | -- | -- |
| 24 | 03/16/11 | DUP | 8260B | 0.5 U | 9.9 | 0.97 | 0.5 U | 0.5 U | 0.65 | 0.5 U | 0.1 U | 0.5 U | 0.5 U | 0.1 U | 0.1 U | 0.5 U | 0.5 U | 0.5 U | 0.5 U | 0.5 U | 0.05 U | -- | 0.1 U | 1 U | 0.5 U | 0.5 U | 0.5 U | -- | -- | -- |
| 55 | 03/18/11 | ORIG | 8260B | 10 U | 230 | 24 | 10 U | 10 U | 64 | 10 U | 2 U | 10 U | 10 U | 2 U | 2 U | 10 U | 10 U | 13 | 59 | 10 U | 1 U | -- | 2 U | 20 U | 10 U | 10 U | 10 U | -- | -- | -- |
| VMP-44 | | | | | | | | | | | | | | | | | | | | | | | | | | | | | | |
| 6 | 03/16/11 | ORIG | 8260B | 0.5 U | 28 | 1.7 | 0.5 U | 0.5 U | 8.4 | 0.5 U | 0.1 U | 0.5 U | 0.5 U | 0.1 U | 0.1 U | 0.5 U | 0.5 U | 2 | 8.4 | 0.5 U | 0.05 U | -- | 0.1 U | 1 U | 0.5 U | 0.5 U | 0.5 U | -- | -- | -- |
| 12 | 03/16/11 | ORIG | 8260B | 0.5 U | 21 | 2 | 0.5 U | 0.5 U | 13 | 0.5 U | 0.1 U | 0.5 U | 0.5 U | 0.1 U | 0.1 U | 0.5 U | 0.5 U | 2.7 | 11 | 0.5 U | 0.05 U | -- | 0.1 U | 1 U | 0.5 U | 0.5 U | 0.5 U | -- | -- | -- |
| 24 | 03/16/11 | ORIG | 8260B | 0.5 U | 390 | 39 | 0.5 U | 0.5 U | 190 | 0.5 U | 0.1 U | 0.5 U | 0.5 U | 0.1 U | 0.1 U | 0.5 U | 0.5 U | 34 | 200 | 0.5 U | 0.05 U | -- | 0.1 U | 1 U | 0.5 U | 0.5 U | 0.5 U | -- | -- | -- |
| 40 | 03/18/11 | ORIG | 8260B | 5 U | 19 | 7.4 | 5 U | 5 U | 130 | 5 U | 1 U | 5 U | 5 U | 1 U | 1 U | 5 U | 5 U | 18 | 33 | 5 U | 0.5 U | -- | 1 U | 10 U | 5 U | 5 U | 5 U | -- | -- | -- |
| 55 | 03/18/11 | ORIG | 8260B | 1 U | 11 | 0.96 | 1 U | 1 U | 8 | 1 U | 0.2 U | 1 U | 1 U | 0.2 U | 0.2 U | 1 U | 1 U | 7 | 42 | 1 U | 0.1 U | -- | 0.2 U | 2 U | 1 U | 1 U | 1 U | -- | -- | -- |
| 60 | 03/18/11 | ORIG | 8260B | 5 U | 920 | 130 | 5 U | 5 U | 2400 | 5 U | 1 U | 5 U | 5 U | 1 U | 1 U | 5 U | 5 U | 480 | 6100 | 5 U | 0.5 U | -- | 1 U | 10 U | 5 U | 5 U | 5 U | -- | -- | -- |
| 70 | 03/18/11 | ORIG | 8260B | 5 U | 170 | 65 | 5 U | 5 U | 3300 | 5 U | 1 U | 5 U | 5 U | 1 U | 1 U | 5 U | 5 U | 570 | 11000 | 5 U | 0.5 U | -- | 1 U | 10 U | 5 U | 5 U | 5 U | -- | -- | -- |
| VMP-45 | | | | | | | | | | | | | | | | | | | | | | | | | | | | | | |
| 6 | 03/18/11 | ORIG | 8260B | 0.5 U | 250 J | 28 J | 0.5 U | 0.5 U | 150 | 0.5 U | 0.1 U | 0.5 U | 0.5 U | 0.1 U | 0.67 | 0.5 U | 0.5 U | 65 | 380 J | 0.5 U | 0.05 U | -- | 0.1 U | 1 U | 0.5 U | 0.5 U | 0.5 U | -- | -- | -- |
| 6 | 03/18/11 | CONF | TO-15 | 1.4 U | 100 J | 17 J | 1.1 U | 1.1 U | 120 | 0.82 U | 0.82 U | 0.8 U | 0.8 U | 1.3 U | 0.73 J | 0.53 U | 0.7 U | 61 | 260 J | 0.35 J | 0.52 U | 2.3 J | 0.4 J | 1.8 | 0.95 | 2.4 | 0.86 J | 0.72 J | 0.24 J | 0.61 |
| 12 | 03/18/11 | ORIG | 8260B | 1 U | 400 | 50 | 1 U | 1 U | 470 | 1 U | 0.2 U | 1 U | 1 U | 0.2 U | 1.1 | 1 U | 1 U | 360 | 2200 | 1.6 | 0.1 U | -- | 0.2 U | 2 U | 1 U | 1 U | 1 U | -- | -- | -- |
| 24 | 03/18/11 | ORIG | 8260B | 10 U | 83 | 22 | 10 U | 10 U | 480 | 10 U | 2 U | 10 U | 10 U | 2 U | 2 U | 10 U | 10 U | 340 | 2500 | 10 U | 1 U | -- | 2 U | 20 U | 10 U | 10 U | 10 U | -- | -- | -- |
| 40 | 03/18/11 | ORIG | 8260B | 5 U | 120 | 17 | 5 U | 5 U | 190 | 5 U | 1 U | 5 U | 5 U | 1 U | 4.8 | 5 U | 5 U | 110 | 330 | 5 U | 0.5 U | -- | 1 U | 10 U | 5 U | 5 U | 5 U | -- | -- | -- |
| 40 | 03/18/11 | DUP | 8260B | 5 U | 130 | 17 | 5 U | 5 U | 200 | 5 U | 1 U | 5 U | 5 U | 1 U | 5 | 5 U | 5 U | 110 | 330 | 5 U | 0.5 U | -- | 1 U | 10 U | 5 U | 5 U | 5 U | -- | -- | -- |
| 55 | 03/18/11 | ORIG | 8260B | 5 U | 3400 | 130 | 5 U | 5 U | 1400 | 5 U | 1 U | 5 U | 5 U | 1 U | 14 | 5 U | 5 U | 520 | 6300 | 5 U | 0.5 U | -- | 1 U | 10 U | 5 U | 5 U | 5 U | -- | -- | -- |
| 60 | 03/18/11 | ORIG | 8260B | 5 U | 290 | 29 | 5 U | 5 U | 360 | 5 U | 1 U | 5 U | 5 U | 1 U | 9.1 | 5 U | 5 U | 190 | 730 | 5 U | 0.5 U | -- | 1 U | 10 U | 5 U | 5 U | 5 U | -- | -- | -- |
| 70 | 03/18/11 | ORIG | 8260B | 5 U | 770 | 53 | 5 U | 5 U | 530 | 5 U | 1 U | 5 U | 5 U | 1 U | 13 | 5 U | 5 U | 220 | 1600 | 5 U | 0.5 U | -- | 1 U | 10 U | 5 U | 5 U | 5 U | -- | -- | -- |

# Table 2-3
# Omega Chemical Superfund Site
# Volatile Organic Compounds (VOCs) Analytical Summary
# Vapor Monitoring Probe Analytical Results

| Sample Location / Depth (ft) | Sample Date | Sample Type | Analytical Method | 1,1,2,2-PCA | PCE | TCE | 1,1,1-TCA | 1,1,2-TCA | 1,1-DCE | 1,1-DCA | 1,2-DCA | cis-1,2-DCE | trans-1,2-DCE | CTC | CFM | CET | MC | Freon 11 | Freon 113 | Freon 12 | VC | ACT | BEN | TOL | EBN | MPX | OX | CDS | IPA | MEK |
|---|---|---|---|---|---|---|---|---|---|---|---|---|---|---|---|---|---|---|---|---|---|---|---|---|---|---|---|---|---|---|
| VMP-46 | | | | | | | | | | | | | | | | | | | | | | | | | | | | | | |
| 55 | 03/18/11 | ORIG | 8260B | 0.5 U | 49 | 15 | 0.5 U | 0.5 U | 40 | 0.5 U | 0.1 U | 0.5 U | 0.5 U | 0.1 U | 0.26 | 0.5 U | 0.5 U | 30 | 160 | 0.5 U | 0.05 U | -- | 0.1 U | 1 U | 0.5 U | 0.5 U | 0.5 U | -- | -- | -- |
| 6 | 03/21/11 | ORIG | 8260B | 0.5 U | 1.2 | 0.45 | 0.5 U | 0.5 U | 0.73 | 0.5 U | 0.1 U | 0.5 U | 0.5 U | 0.1 U | 0.31 J | 0.5 U | 0.5 U | 0.5 U | 1 | 0.5 U | 0.05 U | -- | 0.1 U | 1 U | 0.5 U | 0.5 U | 0.5 U | -- | -- | -- |
| 6 | 03/21/11 | DUP | 8260B | 0.5 U | 1.2 | 0.41 | 0.5 U | 0.5 U | 0.5 U | 0.5 U | 0.1 U | 0.5 U | 0.5 U | 0.1 U | 0.22 J | 0.5 U | 0.5 U | 0.5 U | 0.5 U | 0.5 U | 0.05 U | -- | 0.1 U | 1 U | 0.5 U | 0.5 U | 0.5 U | -- | -- | -- |
| 12 | 03/21/11 | ORIG | 8260B | 0.5 U | 33 | 46 | 0.5 U | 0.5 U | 92 | 0.5 U | 0.1 U | 0.5 U | 0.5 U | 0.1 U | 0.38 | 0.5 U | 0.5 U | 85 | 580 | 0.5 U | 0.05 U | -- | 0.1 U | 1 U | 0.5 U | 0.5 U | 0.5 U | -- | -- | -- |
| 24 | 03/21/11 | ORIG | 8260B | 0.5 U | 12 J | 24 J | 0.5 U | 0.5 U | 82 J | 0.5 U | 0.1 U | 0.5 U | 0.5 U | 0.1 U | 0.33 J | 0.5 U | 0.5 U | 87 | 980 J | 0.5 U | 0.05 U | -- | 0.1 U | 1 U | 0.5 U | 0.5 U | 0.5 U | -- | -- | -- |
| 24 | 03/21/11 | CONF | TO-15 | 2.3 U | 7.3 J | 14 J | 1.8 U | 1.8 U | 60 J | 1.3 U | 1.3 U | 1.3 U | 1.3 U | 2.1 U | 0.63 J | 0.87 U | 1.1 U | 83 | 370 J | 0.25 J | 0.84 U | 3.4 J | 0.32 J | 0.95 J | 1.4 U | 0.54 J | 1.4 U | 1.9 J | 4 U | 0.97 U |
| 40 | 03/21/11 | ORIG | 8260B | 5 U | 190 | 68 | 5 U | 5 U | 190 | 5 U | 1 U | 5 U | 5 U | 1 U | 1.6 | 5 U | 5 U | 120 | 470 | 5 U | 0.5 U | -- | 1 U | 10 U | 5 U | 5 U | 5 U | -- | -- | -- |
| 60 | 03/21/11 | ORIG | 8260B | 5 U | 180 | 46 | 5 U | 5 U | 210 | 5 U | 1 U | 5 U | 5 U | 1 U | 1 U | 5 U | 5 U | 110 | 410 | 5 U | 0.5 U | -- | 1 U | 10 U | 5 U | 5 U | 5 U | -- | -- | -- |
| 70 | 03/21/11 | ORIG | 8260B | 2 U | 6.4 | 7.5 | 2 U | 2 U | 75 | 2 U | 0.4 U | 2 U | 2 U | 0.4 U | 0.4 U | 2 U | 2 U | 97 | 560 | 2 U | 0.2 U | -- | 0.4 U | 4 U | 2 U | 2 U | 2 U | -- | -- | -- |
| VMP-47 | | | | | | | | | | | | | | | | | | | | | | | | | | | | | | |
| 55 | 03/18/11 | ORIG | 8260B | 5 U | 130 | 17 | 5 U | 5 U | 53 | 5 U | 1 U | 5 U | 5 U | 1 U | 1.7 | 5 U | 5 U | 7.7 | 32 | 5 U | 0.5 U | -- | 1 U | 10 U | 5 U | 5 U | 5 U | -- | -- | -- |
| 6 | 03/21/11 | ORIG | 8260B | 0.5 U | 16 J | 1.2 J | 0.5 U | 0.5 U | 3.1 | 0.5 U | 0.1 U | 0.5 U | 0.5 U | 0.1 U | 0.1 U | 0.5 U | 0.5 U | 0.65 | 1.9 | 0.5 U | 0.05 U | -- | 0.1 U | 1 U | 0.5 U | 0.5 U | 0.5 U | -- | -- | -- |
| 6 | 03/21/11 | CONF | TO-15 | 0.06 U | 11 J | 1.7 J | 0.048 U | 0.048 U | 3.7 | 0.036 U | 0.0077 J | 0.035 U | 0.035 U | 0.055 U | 0.2 | 0.023 U | 0.031 U | 0.62 | 1.9 | 0.012 J | 0.0073 J | 1.1 | 0.047 | 0.34 | 0.035 J | 0.16 | 0.049 | 0.13 J | 0.11 U | 0.083 |
| 12 | 03/21/11 | ORIG | 8260B | 0.5 U | 4.4 | 0.39 | 0.5 U | 0.5 U | 1.4 | 0.5 U | 0.1 U | 0.5 U | 0.5 U | 0.1 U | 0.1 U | 0.5 U | 0.5 U | 0.5 U | 0.8 | 0.5 U | 0.05 U | -- | 0.1 U | 1 U | 0.5 U | 0.5 U | 0.5 U | -- | -- | -- |
| 24 | 03/21/11 | ORIG | 8260B | 0.5 U | 32 | 3.8 | 0.5 U | 0.5 U | 11 | 0.5 U | 0.1 U | 0.5 U | 0.5 U | 0.1 U | 0.29 | 0.5 U | 0.5 U | 0.92 | 2.1 | 0.5 U | 0.05 U | -- | 0.1 U | 1 U | 0.5 U | 0.5 U | 0.5 U | -- | -- | -- |
| 40 | 03/22/11 | ORIG | 8260B | 1 U | 23 | 15 | 1 U | 1 U | 93 | 1 U | 0.2 U | 1 U | 1 U | 0.2 U | 2.3 | 1 U | 1 U | 8.6 | 22 | 1 U | 0.1 U | -- | 0.2 U | 2 U | 1 U | 1 U | 1 U | -- | -- | -- |
| 60 | 03/22/11 | ORIG | 8260B | 2 U | 73 | 16 | 2 U | 2 U | 95 | 2 U | 0.4 U | 2 U | 2 U | 0.4 U | 2.5 | 2 U | 2 U | 7.9 | 22 | 2 U | 0.2 U | -- | 0.4 U | 4 U | 2 U | 2 U | 2 U | -- | -- | -- |
| 60 | 03/22/11 | DUP | 8260B | 2 U | 88 | 18 | 2 U | 2 U | 100 | 2 U | 0.4 U | 2 U | 2 U | 0.4 U | 2.4 | 2 U | 2 U | 8.6 | 23 | 2 U | 0.2 U | -- | 0.4 U | 4 U | 2 U | 2 U | 2 U | -- | -- | -- |
| 70 | 03/22/11 | ORIG | 8260B | 5 U | 730 | 58 | 5 U | 5 U | 730 | 5 U | 1 U | 5 U | 5 U | 1 U | 7.1 | 5 U | 5 U | 97 | 240 | 5 U | 0.5 U | -- | 1 U | 10 U | 5 U | 5 U | 5 U | -- | -- | -- |
| VMP-48 | | | | | | | | | | | | | | | | | | | | | | | | | | | | | | |
| 24 | 03/16/11 | CONF | TO-15 | 0.076 U | 16 J | 1.7 J | 0.06 U | 0.06 U | 1.7 J | 0.045 U | 0.045 U | 0.044 U | 0.044 U | 0.07 U | 0.028 J | 0.029 U | 0.038 U | 0.2 J | 0.57 J | 0.055 U | 0.028 U | 0.19 J | 0.059 | 0.098 | 0.043 J | 0.12 | 0.041 J | 0.058 J | 0.017 J | 0.073 |
| 55 | 03/18/11 | ORIG | 8260B | 5 U | 83 | 8.6 | 5 U | 5 U | 20 | 5 U | 1 U | 5 U | 5 U | 1 U | 7.4 | 5 U | 5 U | 13 | 53 | 5 U | 0.5 U | -- | 1 U | 10 U | 5 U | 5 U | 5 U | -- | -- | -- |
| 6 | 03/21/11 | ORIG | 8260B | 0.5 U | 2.4 | 0.1 U | 0.5 U | 0.5 U | 0.5 U | 0.5 U | 0.1 U | 0.5 U | 0.5 U | 0.1 U | 0.1 U | 0.5 U | 0.5 U | 1 | 3.1 | 0.5 U | 0.05 U | -- | 0.1 U | 1 U | 0.5 U | 0.5 U | 0.5 U | -- | -- | -- |
| 12 | 03/21/11 | ORIG | 8260B | 0.5 U | 1 | 0.1 U | 0.5 U | 0.5 U | 0.5 U | 0.5 U | 0.1 U | 0.5 U | 0.5 U | 0.1 U | 0.1 U | 0.5 U | 0.5 U | 1.4 | 5.2 | 0.5 U | 0.05 U | -- | 0.1 U | 1 U | 0.5 U | 0.5 U | 0.5 U | -- | -- | -- |
| 24 | 03/21/11 | ORIG | 8260B | 0.5 U | 2.6 J | 0.18 J | 0.5 U | 0.5 U | 0.81 J | 0.5 U | 0.1 U | 0.5 U | 0.5 U | 0.1 U | 0.1 U | 0.5 U | 0.5 U | 1.9 J | 6.4 J | 0.5 U | 0.05 U | -- | 0.1 U | 1 U | 0.5 U | 0.5 U | 0.5 U | -- | -- | -- |
| 40 | 03/21/11 | ORIG | 8260B | 0.5 U | 1.2 J | 0.25 | 0.5 U | 0.5 U | 29 J | 0.5 U | 0.1 U | 0.5 U | 0.5 U | 0.1 U | 0.43 | 0.5 U | 0.5 U | 16 | 60 | 0.5 U | 0.05 U | -- | 0.1 U | 1 U | 0.5 U | 0.5 U | 0.5 U | -- | -- | -- |
| 40 | 03/21/11 | CONF | TO-15 | 0.41 U | 2.9 J | 0.26 J | 0.32 U | 0.32 U | 21 J | 0.24 U | 0.24 U | 0.24 U | 0.24 U | 0.37 U | 0.4 | 0.16 U | 0.21 U | 14 | 51 | 0.077 J | 0.15 U | 0.66 J | 0.083 J | 0.22 | 0.055 J | 0.17 J | 0.043 J | 1 | 0.73 U | 0.18 U |
| 60 | 03/21/11 | ORIG | 8260B | 2 U | 42 | 8 | 2 U | 2 U | 30 | 2 U | 0.4 U | 2 U | 2 U | 0.4 U | 9.6 | 2 U | 2 U | 17 | 63 | 2 U | 0.2 U | -- | 0.4 U | 4 U | 2 U | 2 U | 2 U | -- | -- | -- |
| 70 | 03/21/11 | ORIG | 8260B | 2 U | 19 | 27 | 2 U | 2 U | 250 | 2 U | 4.7 | 2 U | 2 U | 0.4 U | 85 | 2 U | 2 U | 69 | 220 | 2 U | 0.2 U | -- | 0.4 U | 4 U | 2 U | 2 U | 2 U | -- | -- | -- |
| VMP-49 | | | | | | | | | | | | | | | | | | | | | | | | | | | | | | |
| 6 | 12/07/11 | ORIG | TO-15 | 0.16 U | 0.38 | 0.063 U | 0.064 U | 0.064 U | 0.12 | 0.047 U | 0.047 U | 0.046 U | 0.046 U | 0.073 U | 0.057 U | 0.031 U | 0.041 U | 4.2 | 21 | 0.036 J | 0.03 U | 0.13 J | 0.0082 J | 0.088 | 0.051 U | 0.015 J | 0.051 U | 0.022 J | 0.14 U | 0.034 U |
| 12 | 12/07/11 | ORIG | TO-15 | 0.21 U | 0.85 | 0.08 U | 0.082 U | 0.082 U | 0.31 | 0.061 U | 0.061 U | 0.059 U | 0.059 U | 0.094 U | 0.01 J | 0.04 U | 0.052 U | 5.4 | 26 | 0.042 J | 0.038 U | 0.1 J | 0.048 U | 0.032 J | 0.065 U | 0.065 U | 0.065 U | 0.23 U | 0.18 U | 0.044 U |
| 12 | 12/07/11 | DUP | TO-15 | 0.19 U | 0.75 | 0.076 U | 0.077 U | 0.077 U | 0.32 | 0.057 U | 0.057 U | 0.056 U | 0.056 U | 0.089 U | 0.012 J | 0.037 U | 0.049 U | 5.5 | 27 | 0.045 J | 0.036 U | 0.13 J | 0.045 U | 0.086 | 0.061 U | 0.061 U | 0.061 U | 0.22 U | 0.17 U | 0.042 U |
| 24 | 12/07/11 | ORIG | TO-15 | 0.043 U | 0.026 J | 0.017 U | 0.017 U | 0.017 U | 0.12 J | 0.013 U | 0.013 U | 0.013 U | 0.013 U | 0.02 U | 0.015 U | 0.0083 U | 0.011 U | 1 J | 4.3 J | 0.014 J | 0.0081 U | 0.041 | 0.027 J | 0.025 J | 0.0035 J | 0.013 J | 0.0049 J | 0.24 J | 0.0081 J | 0.0093 U |
| 24 | 12/07/11 | CONF | TO-15 | 0.14 U | 0.15 J | 0.054 U | 0.055 U | 0.055 U | 0.63 J | 0.04 U | 0.04 U | 0.04 U | 0.04 U | 0.063 U | 0.049 U | 0.026 U | 0.35 U | 3.9 J | 23 J | 0.049 U | 0.026 U | 0.095 U | 0.12 J | 0.094 J | 0.043 U | 0.17 U | 0.043 U | 1.1 J | -- | 0.088 U |
| 40 | 12/07/11 | ORIG | TO-15 | 0.77 U | 2.1 | 0.15 J | 0.31 U | 0.31 U | 6.1 | 0.23 U | 0.23 U | 0.22 U | 0.22 U | 0.35 U | 0.1 J | 0.15 U | 0.2 U | 20 | 94 | 0.14 J | 0.14 U | 0.53 J | 0.062 J | 0.38 | 0.03 J | 0.1 J | 0.046 J | 1.7 | 0.69 U | 0.17 U |
| 55 | 12/07/11 | ORIG | TO-15 | 0.85 U | 3.4 | 0.2 J | 0.34 U | 0.34 U | 8.2 | 0.25 U | 0.25 U | 0.25 U | 0.25 U | 0.39 U | 0.18 J | 0.16 U | 0.22 U | 20 | 89 | 0.13 J | 0.16 U | 0.43 J | 0.2 U | 0.079 J | 0.27 U | 0.27 U | 0.27 U | 0.97 U | 0.76 U | 0.18 U |
| VMP-50 | | | | | | | | | | | | | | | | | | | | | | | | | | | | | | |
| 6 | 12/07/11 | ORIG | TO-15 | 1.8 U | 5.1 J | 0.71 U | 0.72 U | 0.72 U | 28 | 0.53 U | 0.53 U | 0.52 U | 0.52 U | 0.83 U | 0.12 J | 0.35 U | 0.46 U | 44 J | 140 J | 0.2 J | 0.34 U | 0.89 J | 0.42 U | 0.54 J | 0.12 J | 0.29 J | 0.12 J | 0.42 J | 1.6 U | 0.39 U |
| 6 | 12/07/11 | DUP | TO-15 | 1.7 U | 7.3 J | 0.18 J | 0.66 U | 0.66 U | 35 | 0.49 U | 0.49 U | 0.48 U | 0.48 U | 0.76 U | 0.59 U | 0.32 U | 0.42 U | 57 J | 190 J | 0.28 J | 0.31 U | 0.88 J | 0.39 U | 0.13 J | 0.53 U | 0.53 U | 0.53 U | 1.9 U | 1.5 U | 0.36 U |
| 12 | 12/07/11 | ORIG | TO-15 | 2.1 U | 15 | 0.32 J | 0.82 U | 0.82 U | 57 | 0.61 U | 0.61 U | 0.59 U | 0.59 U | 0.94 U | 0.73 U | 0.4 U | 0.52 U | 81 | 250 | 0.28 J | 0.38 U | 0.91 J | 0.48 U | 0.16 J | 0.65 U | 0.65 U | 0.65 U | 0.37 J | 1.8 U | 0.44 U |
| 24 | 12/07/11 | ORIG | TO-15 | 2.6 U | 2.9 | 0.22 J | 1 U | 1 U | 59 | 0.77 U | 0.77 U | 0.76 U | 0.76 U | 1.2 U | 0.93 U | 0.5 U | 0.66 U | 67 | 200 | 0.34 J | 0.49 U | 0.82 J | 0.16 J | 0.46 J | 0.83 U | 0.83 U | 0.83 U | 2 J | 2.3 U | 0.56 U |
| 24 | 12/07/11 | CONF | TO-15 | 0.0069 U | 3.4 | 0.28 | 0.0027 U | 0.0027 U | 58 | 0.002 U | 0.002 U | 0.004 | 0.002 U | 0.0047 | 0.021 | 0.0013 U | 0.017 U | 55 | 160 | 0.21 J | 0.0013 U | 0.029 J | 0.14 | 0.25 J | 0.051 | 0.19 | 0.073 | 0.13 J | -- | 0.015 |
| 40 | 12/07/11 | ORIG | TO-15 | 1 U | 1.7 | 0.14 J | 0.41 U | 0.41 U | 29 | 0.3 U | 0.3 U | 0.3 U | 0.3 U | 0.47 U | 0.061 J | 0.2 U | 0.26 U | 24 | 62 | 0.1 J | 0.19 U | 0.35 J | 0.076 J | 0.18 J | 0.33 U | 0.11 J | 0.049 J | 0.57 J | 0.92 U | 0.22 U |
| 55 | 12/07/11 | ORIG | TO-15 | 0.83 U | 12 | 0.37 | 0.33 U | 0.33 U | 24 | 0.25 U | 0.25 U | 0.24 U | 0.24 U | 0.38 U | 0.073 J | 0.16 U | 0.21 U | 19 | 57 | 0.1 J | 0.16 U | 0.33 J | 0.19 U | 0.13 J | 0.26 U | 0.26 U | 0.26 U | 0.94 U | 0.75 U | 0.18 U |
| 60 | 12/07/11 | ORIG | TO-15 | 4.7 U | 32 | 1.2 J | 1.9 U | 1.9 U | 120 | 1.4 U | 1.4 U | 1.4 U | 1.4 U | 2.2 U | 1.7 U | 0.91 U | 1.2 U | 98 | 290 | 0.43 J | 0.88 U | 1.8 J | 1.1 U | 1.4 | 1.5 U | 1.5 U | 1.5 U | 5.4 U | 4.2 U | 1 U |
| 70 | 12/07/11 | ORIG | TO-15 | 0.28 U | 1.7 | 0.035 J | 0.11 U | 0.11 U | 7.6 | 0.082 U | 0.082 U | 0.08 U | 0.08 U | 0.13 U | 0.099 U | 0.053 U | 0.07 U | 7.7 | 24 | 0.045 J | 0.052 U | 0.18 J | 0.015 J | 0.093 | 0.088 U | 0.025 J | 0.088 U | 0.13 J | 0.25 U | 0.06 U |
| VMP-51 | | | | | | | | | | | | | | | | | | | | | | | | | | | | | | |
| 6 | 12/07/11 | ORIG | TO-15 | 0.029 U | 0.12 J | 0.011 U | 0.011 U | 0.011 U | 0.0074 J | 0.0085 U | 0.0085 U | 0.0084 U | 0.0084 U | 0.013 U | 0.074 | 0.0056 U | 0.0073 U | 0.0057 J | 0.022 | 0.0031 J | 0.0054 U | 0.015 J | 0.0017 J | 0.0014 J | 0.0091 U | 0.0091 U | 0.0091 U | 0.013 J | 0.026 U | 0.0062 UJ |
| 6 | 12/07/11 | DUP | TO-15 | 0.026 U | 0.09 J | 0.01 U | 0.01 U | 0.01 U | 0.0068 J | 0.0076 U | 0.0076 U | 0.0074 U | 0.0074 U | 0.012 U | 0.07 | 0.0049 U | 0.0065 U | 0.0053 J | 0.019 | 0.0034 J | 0.0048 U | 0.018 J | 0.0019 J | 0.0021 J | 0.0081 U | 0.0081 U | 0.0081 U | 0.014 J | 0.023 U | 0.0055 UJ |
| 12 | 12/07/11 | ORIG | TO-15 | 0.026 U | 0.14 | 0.01 U | 0.01 U | 0.01 U | 0.0068 J | 0.0076 U | 0.0076 U | 0.0074 U | 0.0074 U | 0.012 U | 0.018 | 0.0049 U | 0.0065 U | 0.0066 J | 0.039 | 0.0031 J | 0.0048 U | 0.035 | 0.003 J | 0.0011 J | 0.0081 U | 0.0081 U | 0.0081 U | 0.016 J | 0.023 U | 0.0055 UJ |
| 24 | 12/07/11 | ORIG | TO-15 | 0.03 U | 0.43 | 0.0022 J | 0.012 U | 0.012 U | 0.03 | 0.0087 U | 0.0087 U | 0.0085 U | 0.0085 U | 0.014 U | 0.033 J | 0.0057 U | 0.0075 U | 0.048 J | 0.35 J | 0.0044 J | 0.0055 U | 0.037 | 0.0027 J | 0.0081 U | 0.0093 U | 0.0093 U | 0.0093 U | 0.019 J | 0.026 U | 0.0063 UJ |
| 24 | 12/07/11 | CONF | TO-15 | 0.017 U | 0.36 | 0.0067 U | 0.0068 U | 0.0068 U | 0.024 | 0.005 U | 0.005 U | 0.0049 U | 0.0049 U | 0.0078 U | 0.025 J | 0.0033 U | 0.043 U | 0.036 J | 0.26 J | 0.013 J | 0.0032 U | 0.031 | 0.004 U | 0.0047 U | 0.0054 U | 0.022 U | 0.0054 U | 0.017 | -- | 0.011 U |
| 40 | 12/07/11 | ORIG | TO-15 | 0.67 U | 0.78 | 0.26 U | 0.27 U | 0.27 U | 3.1 | 0.2 U | 0.2 U | 0.19 U | 0.19 U | 0.31 U | 0.05 J | 0.13 U | 0.17 U | 4.7 | 54 | 0.25 | 0.12 U | 0.39 J | 0.11 J | 0.31 | 0.079 J | 0.68 | 0.25 | 0.4 J | 0.6 U | 0.14 UJ |
| 55 | 12/07/11 | ORIG | TO-15 | 2.8 U | 18 | 1.1 U | 1.1 U | 1.1 U | 26 | 0.82 U | 0.82 U | 0.8 U | 0.8 U | 1.3 U | 0.99 U | 0.53 U | 0.7 U | 23 | 250 | 0.49 J | 0.52 U | 1.2 J | 0.65 U | 0.32 J | 0.88 U | 0.54 J | 0.2 J | 3.1 U | 2.5 U | 0.6 UJ |
| 60 | 12/07/11 | ORIG | TO-15 | 2.8 U | 6.3 | 0.25 J | 1.1 U | 1.1 U | 39 | 0.82 U | 0.82 U | 0.8 U | 0.8 U | 1.3 U | 0.99 U | 0.53 U | 0.7 U | 23 | 210 | 0.42 J | 0.52 U | 1.3 J | 0.23 J | 2.5 | 0.57 J | 4 | 1.3 | 0.65 J | 2.5 U | 0.6 UJ |
| 68 | 12/07/11 | ORIG | TO-15 | 1.6 U | 4 | 0.26 J | 0.64 U | 0.64 U | 28 | 0.47 U | 0.47 U | 0.46 U | 0.46 U | 0.73 U | 0.57 U | 0.31 U | 0.41 U | 18 | 120 | 0.28 J | 0.3 U | 0.75 J | 0.11 J | 0.14 J | 0.51 U | 0.27 J | 0.51 U | 0.43 J | 1.4 U | 0.34 UJ |
| VMP-52 | | | | | | | | | | | | | | | | | | | | | | | | | | | | | | |
| 55 | 06/03/11 | CONF | TO-15 | 0.013 U | 0.05 | 0.023 J | 0.011 U | 0.011 U | 0.0086 | 0.0079 U | 0.0079 U | 0.0077 U | 0.0077 U | 0.012 U | 0.0095 U | 0.0051 U | 0.0068 U | 0.0058 J | 0.027 J | 0.0028 J | 0.005 U | 0.045 | 0.0085 | 0.016 | 0.0015 J | 0.0049 J | 0.0019 J | 0.0077 J | 0.024 U | 0.021 |
| 55 | 06/03/11 | ORIG | 8260B | 0.5 U | 0.1 U | 0.31 J | 0.5 U | 0.5 U | 0.5 U | 0.5 U | 0.1 U | 0.5 U | 0.5 U | 0.1 U | 0.1 U | 0.5 U | 0.5 U | 0.5 U | 0.51 J | 0.5 U | 0.05 U | -- | 0.1 U | 1 U | 0.5 U | 0.5 U | 0.5 U | -- | -- | -- |
| 6 | 06/03/11 | ORIG | 8260B | 0.5 U | 0.27 | 0.29 | 0.5 U | 0.5 U | 0.5 U | 0.5 U | 0.1 U | 0.5 U | 0.5 U | 0.1 U | 0.1 U | 0.5 U | 0.5 U | 0.5 U | 1.7 | 0.5 U | 0.05 U | -- | 0.1 U | 1 U | 0.5 U | 0.5 U | 0.5 U | -- | -- | -- |
| 12 | 06/03/11 | ORIG | 8260B | 0.5 U | 0.26 | 0.4 | 0.5 U | 0.5 U | 0.5 U | 0.5 U | 0.1 U | 0.5 U | 0.5 U | 0.1 U | 0.1 U | 0.5 U | 0.5 U | 0.5 U | 1.4 | 0.5 U | 0.05 U | -- | 0.1 U | 1 U | 0.5 U | 0.5 U | 0.5 U | -- | -- | -- |
| 24 | 06/03/11 | ORIG | 8260B | 0.5 U | 0.1 U | 0.11 | 0.5 U | 0.5 U | 0.5 U | 0.5 U | 0.1 U | 0.5 U | 0.5 U | 0.1 U | 0.1 U | 0.5 U | 0.5 U | 0.5 U | 0.5 U | 0.5 U | 0.05 U | -- | 0.1 U | 1 U | 0.5 U | 0.5 U | 0.5 U | -- | -- | -- |
| 40 | 06/03/11 | ORIG | 8260B | 0.5 U | 0.11 | 0.19 | 0.5 U | 0.5 U | 0.5 U | 0.5 U | 0.1 U | 0.5 U | 0.5 U | 0.1 U | 0.1 U | 0.5 U | 0.5 U | 0.5 U | 1.7 | 0.5 U | 0.05 U | -- | 0.1 U | 1 U | 0.5 U | 0.5 U | 0.5 U | -- | -- | -- |
| 60 | 06/03/11 | ORIG | 8260B | 0.5 U | 0.46 | 0.64 | 0.5 U | 0.5 U | 1.1 | 0.5 U | 0.1 U | 0.5 U | 0.5 U | 0.1 U | 0.1 U | 0.5 U | 0.5 U | 3.6 | 19 | 0.5 U | 0.05 U | -- | 0.1 U | 1 U | 0.5 U | 0.5 U | 0.5 U | -- | -- | -- |

# Table 2-3
## Omega Chemical Superfund Site
## Volatile Organic Compounds (VOCs) Analytical Summary
## Vapor Monitoring Probe Analytical Results

| Sample Location / Depth (ft) | Sample Date | Sample Type | Analytical Method | 1,1,2,2-PCA | PCE | TCE | 1,1,1-TCA | 1,1,2-TCA | 1,1-DCE | 1,1-DCA | 1,2-DCA | cis-1,2-DCE | trans-1,2-DCE | CTC | CFM | CET | MC | Freon 11 | Freon 113 | Freon 12 | VC | ACT | BEN | TOL | EBN | MPX | OX | CDS | IPA | MEK |
|---|---|---|---|---|---|---|---|---|---|---|---|---|---|---|---|---|---|---|---|---|---|---|---|---|---|---|---|---|---|---|
| VMP-53 | | | | | | | | | | | | | | | | | | | | | | | | | | | | | | |
| 24 | 06/02/11 | CONF | TO-15 | 0.62 U | 4.3 J | 8.9 J | 0.5 U | 0.5 U | 39 J | 0.37 U | 0.37 U | 0.36 U | 0.36 U | 0.57 U | 0.44 U | 0.24 U | 0.32 U | 3.9 J | 6.6 J | 0.45 U | 0.23 U | 0.39 J | 0.088 J | 0.2 J | 0.37 J | 0.5 | 0.15 J | 0.66 J | 1.1 U | 0.27 U |
| 6 | 06/02/11 | ORIG | 8260B | 0.5 U | 20 | 19 | 0.5 U | 0.5 U | 48 | 0.5 U | 0.1 U | 0.5 U | 0.5 U | 0.1 U | 0.1 U | 0.5 U | 0.5 U | 5.7 | 10 | 0.5 U | 0.05 U | -- | 0.1 U | 1 U | 0.5 U | 0.5 U | 0.5 U | -- | -- | -- |
| 12 | 06/02/11 | ORIG | 8260B | 0.5 U | 36 | 26 | 0.5 U | 0.5 U | 59 | 0.5 U | 0.1 U | 0.5 U | 0.5 U | 0.1 U | 0.1 U | 0.5 U | 0.5 U | 6.5 | 12 | 0.5 U | 0.05 U | -- | 0.1 U | 1 U | 0.5 U | 0.5 U | 0.5 U | -- | -- | -- |
| 24 | 06/02/11 | ORIG | 8260B | 0.5 U | 14 J | 20 J | 0.5 U | 0.5 U | 90 J | 0.5 U | 0.1 U | 0.5 U | 0.5 U | 0.1 U | 0.1 U | 0.5 U | 0.5 U | 7.6 J | 12 J | 0.5 U | 0.05 U | -- | 0.12 J | 1 U | 0.5 U | 0.5 U | 0.5 U | -- | -- | -- |
| 40 | 06/02/11 | ORIG | 8260B | 0.5 U | 3.3 | 9.5 | 0.5 U | 0.5 U | 80 | 0.5 U | 0.1 U | 0.5 U | 0.5 U | 0.1 U | 0.1 U | 0.5 U | 0.5 U | 10 | 14 | 0.5 U | 0.05 U | -- | 0.1 U | 1 U | 0.5 U | 0.5 U | 0.5 U | -- | -- | -- |
| 60 | 06/02/11 | ORIG | 8260B | 0.5 U | 14 | 23 | 0.5 U | 0.5 U | 47 | 0.5 U | 0.1 U | 0.5 U | 0.5 U | 0.1 U | 0.1 U | 0.5 U | 0.5 U | 9.5 | 15 | 0.5 U | 0.05 U | -- | 0.1 U | 1 U | 0.5 U | 0.5 U | 0.5 U | -- | -- | -- |
| 70 | 06/02/11 | ORIG | 8260B | 0.5 U | 4.2 | 11 | 0.5 U | 0.5 U | 26 | 0.5 U | 0.1 U | 0.5 U | 0.5 U | 0.1 U | 0.1 U | 0.5 U | 0.5 U | 8.1 | 13 | 0.5 U | 0.05 U | -- | 0.18 | 1 U | 0.5 U | 0.5 U | 0.5 U | -- | -- | -- |
| 70 | 06/02/11 | DUP | 8260B | 0.5 U | 4 | 9 | 0.5 U | 0.5 U | 25 | 0.5 U | 0.1 U | 0.5 U | 0.5 U | 0.1 U | 0.1 U | 0.5 U | 0.5 U | 6.5 | 12 | 0.5 U | 0.05 U | -- | 0.17 | 1 U | 0.5 U | 0.5 U | 0.5 U | -- | -- | -- |
| 55 | 06/03/11 | ORIG | 8260B | 0.5 U | 5.3 | 7.2 | 0.5 U | 0.5 U | 16 | 0.5 U | 0.1 U | 0.5 U | 0.5 U | 0.1 U | 0.1 U | 0.5 U | 0.5 U | 2.9 | 4.5 | 0.5 U | 0.05 U | -- | 0.1 U | 1 U | 0.5 U | 0.5 U | 0.5 U | -- | -- | -- |
| VMP-54 | | | | | | | | | | | | | | | | | | | | | | | | | | | | | | |
| 6 | 06/02/11 | ORIG | 8260B | 0.5 U | 16 | 370 | 0.5 U | 0.5 U | 3.4 | 0.5 U | 0.1 U | 5.1 | 0.5 U | 0.1 U | 0.89 | 0.5 U | 0.5 U | 5.1 | 29 | 0.5 U | 0.05 U | -- | 0.1 U | 1 U | 0.5 U | 0.5 U | 0.5 U | -- | -- | -- |
| 12 | 06/02/11 | ORIG | 8260B | 0.5 U | 16 | 320 | 0.5 U | 0.5 U | 3.6 | 0.5 U | 0.1 U | 5 | 0.5 U | 0.1 U | 0.88 | 0.5 U | 0.5 U | 5.8 | 29 | 0.5 U | 0.05 U | -- | 0.1 U | 1 U | 0.5 U | 0.5 U | 0.5 U | -- | -- | -- |
| 24 | 06/02/11 | ORIG | 8260B | 0.5 U | 8.5 | 200 | 0.5 U | 0.5 U | 6.8 | 0.5 U | 0.1 U | 6.2 | 0.5 U | 0.1 U | 0.83 | 0.5 U | 0.5 U | 8.8 | 49 | 0.5 U | 0.05 U | -- | 0.1 | 1 U | 0.5 U | 0.5 U | 0.5 U | -- | -- | -- |
| 40 | 06/03/11 | ORIG | 8260B | 0.5 U | 14 | 220 | 0.5 U | 0.5 U | 31 | 0.5 U | 0.1 U | 12 | 0.5 U | 0.1 U | 1.7 | 0.5 U | 0.5 U | 25 | 190 | 0.5 U | 0.05 U | -- | 0.13 | 1 U | 0.5 U | 0.5 U | 0.5 U | -- | -- | -- |
| 55 | 06/03/11 | ORIG | 8260B | 0.5 U | 0.37 | 3 | 0.5 U | 0.5 U | 1.2 | 0.5 U | 0.1 U | 0.5 U | 0.5 U | 0.1 U | 0.1 U | 0.5 U | 0.5 U | 0.94 | 4.3 | 0.5 U | 0.05 U | -- | 0.1 U | 1 U | 0.5 U | 0.5 U | 0.5 U | -- | -- | -- |
| 60 | 06/03/11 | ORIG | 8260B | 0.5 U | 140 | 440 | 0.5 U | 0.5 U | 230 | 0.5 U | 0.1 U | 17 | 0.63 | 0.1 U | 6.7 | 0.5 U | 0.5 U | 80 | 590 | 0.5 U | 0.05 U | -- | 0.17 | 1 U | 0.5 U | 0.5 U | 0.5 U | -- | -- | -- |
| 6 | 09/08/11 | ORIG | TO-15 | 1.5 U | 14 | 210 | 1.2 U | 1.2 U | 4.3 | 0.38 J | 0.29 J | 5.2 | 0.23 J | 1.3 U | 3.2 | 0.56 U | 0.74 U | 4.6 | 40 | 1.1 U | 0.54 U | 1.9 J | 0.18 J | 0.69 J | 0.22 J | 0.41 J | 0.25 J | 3.3 U | 2.6 U | 0.63 U |
| 12 | 09/08/11 | ORIG | TO-15 | 1.5 U | 15 | 220 | 1.2 U | 1.2 U | 4.6 | 0.41 J | 0.28 J | 5.5 | 0.29 J | 1.3 U | 3.3 | 0.56 U | 0.74 U | 3.8 | 41 | 1.1 U | 0.54 U | 2.2 J | 0.16 J | 0.78 J | 0.31 J | 0.44 J | 0.3 J | 0.48 J | 2.6 U | 0.63 U |
| VMP-55 | | | | | | | | | | | | | | | | | | | | | | | | | | | | | | |
| 40 | 06/02/11 | CONF | TO-15 | 0.013 U | 0.19 | 0.079 J | 0.01 U | 0.01 U | 0.27 J | 0.0077 U | 0.0077 U | 0.0076 U | 0.0076 U | 0.012 U | 0.0043 J | 0.005 U | 0.0066 U | 0.79 J | 2.3 | 0.0036 J | 0.0049 U | 0.088 | 0.012 | 0.036 | 0.0028 J | 0.01 | 0.0029 J | 0.14 | 0.023 U | 0.014 |
| 40 | 06/02/11 | ORIG | 8260B | 0.5 U | 0.17 | 0.35 J | 0.5 U | 0.5 U | 1.9 J | 0.5 U | 0.1 U | 0.5 U | 0.5 U | 0.1 U | 0.1 U | 0.5 U | 0.5 U | 1.7 J | 2.2 | 0.5 U | 0.05 U | -- | 0.1 U | 1 U | 0.5 U | 0.5 U | 0.5 U | -- | -- | -- |
| 58.5 | 06/02/11 | ORIG | 8260B | 0.5 U | 0.1 U | 0.1 U | 0.5 U | 0.5 U | 0.5 U | 0.5 U | 0.1 U | 0.5 U | 0.5 U | 0.1 U | 0.1 U | 0.5 U | 0.5 U | 2.3 | 2.6 | 0.5 U | 0.05 U | -- | 0.1 U | 1 U | 0.5 U | 0.5 U | 0.5 U | -- | -- | -- |
| 70 | 06/02/11 | ORIG | 8260B | 0.5 U | 0.1 U | 0.1 U | 0.5 U | 0.5 U | 0.5 U | 0.5 U | 0.1 U | 0.5 U | 0.5 U | 0.1 U | 0.1 U | 0.5 U | 0.5 U | 0.5 U | 0.5 U | 0.5 U | 0.05 U | -- | 0.1 U | 1 U | 0.5 U | 0.5 U | 0.5 U | -- | -- | -- |
| 6 | 06/02/11 | ORIG | 8260B | 0.5 U | 1.9 | 1.4 | 0.5 U | 0.5 U | 0.5 U | 0.5 U | 0.1 U | 0.5 U | 0.5 U | 0.1 U | 0.1 U | 0.5 U | 0.5 U | 0.66 | 0.94 | 0.5 U | 0.05 U | -- | 0.1 U | 1 U | 0.5 U | 0.5 U | 0.5 U | -- | -- | -- |
| 12 | 06/02/11 | ORIG | 8260B | 0.5 U | 0.65 | 0.72 | 0.5 U | 0.5 U | 0.5 U | 0.5 U | 0.1 U | 0.5 U | 0.5 U | 0.1 U | 0.1 U | 0.5 U | 0.5 U | 0.6 | 0.94 | 0.5 U | 0.05 U | -- | 0.1 U | 1 U | 0.5 U | 0.5 U | 0.5 U | -- | -- | -- |
| 24 | 06/02/11 | ORIG | 8260B | 0.5 U | 0.18 | 0.14 | 0.5 U | 0.5 U | 0.5 U | 0.5 U | 0.1 U | 0.5 U | 0.5 U | 0.1 U | 0.1 U | 0.5 U | 0.5 U | 0.65 | 0.81 | 0.5 U | 0.05 U | -- | 0.1 U | 1 U | 0.5 U | 0.5 U | 0.5 U | -- | -- | -- |
| 55 | 06/03/11 | ORIG | 8260B | 0.5 U | 0.18 | 0.22 | 0.5 U | 0.5 U | 1.3 | 0.5 U | 0.1 U | 0.5 U | 0.5 U | 0.1 U | 0.1 U | 0.5 U | 0.5 U | 0.5 U | 0.5 U | 0.5 U | 0.05 U | -- | 0.1 U | 1 U | 0.5 U | 0.5 U | 0.5 U | -- | -- | -- |
| VMP-56 | | | | | | | | | | | | | | | | | | | | | | | | | | | | | | |
| 55 | 06/03/11 | ORIG | 8260B | 0.5 U | 0.1 U | 0.1 U | 0.5 U | 0.5 U | 0.5 U | 0.5 U | 0.1 U | 0.5 U | 0.5 U | 0.1 U | 0.1 U | 0.5 U | 0.5 U | 0.5 U | 0.5 U | 0.5 U | 0.05 U | -- | 0.1 U | 1 U | 0.5 U | 0.5 U | 0.5 U | -- | -- | -- |
| 40 | 06/03/11 | ORIG | 8260B | 0.5 U | 0.1 U | 0.16 | 0.5 U | 0.5 U | 0.5 U | 0.5 U | 0.1 U | 0.5 U | 0.5 U | 0.1 U | 0.1 U | 0.5 U | 0.5 U | 0.5 U | 0.6 | 0.5 U | 0.05 U | -- | 0.1 U | 1 U | 0.5 U | 0.5 U | 0.5 U | -- | -- | -- |
| 40 | 06/03/11 | DUP | 8260B | 0.5 U | 0.1 U | 0.1 U | 0.5 U | 0.5 U | 0.5 U | 0.5 U | 0.1 U | 0.5 U | 0.5 U | 0.1 U | 0.1 U | 0.5 U | 0.5 U | 0.5 U | 0.5 U | 0.5 U | 0.05 U | -- | 0.1 U | 1 U | 0.5 U | 0.5 U | 0.5 U | -- | -- | -- |
| 6 | 06/03/11 | ORIG | 8260B | 0.5 U | 0.22 | 0.1 U | 0.5 U | 0.5 U | 0.5 U | 0.5 U | 0.1 U | 0.5 U | 0.5 U | 0.1 U | 0.1 U | 0.5 U | 0.5 U | 0.5 U | 0.5 U | 0.5 U | 0.05 U | -- | 0.1 U | 1 U | 0.5 U | 0.5 U | 0.5 U | -- | -- | -- |
| 12 | 06/03/11 | ORIG | 8260B | 0.5 U | 0.1 U | 0.1 U | 0.5 U | 0.5 U | 0.5 U | 0.5 U | 0.1 U | 0.5 U | 0.5 U | 0.1 U | 0.1 U | 0.5 U | 0.5 U | 0.5 U | 0.5 U | 0.5 U | 0.05 U | -- | 0.1 U | 1 U | 0.5 U | 0.5 U | 0.5 U | -- | -- | -- |
| 24 | 06/03/11 | ORIG | 8260B | 0.5 U | 0.19 | 0.1 U | 0.5 U | 0.5 U | 0.5 U | 0.5 U | 0.1 U | 0.5 U | 0.5 U | 0.1 U | 0.1 U | 0.5 U | 0.5 U | 0.5 U | 0.5 U | 0.5 U | 0.05 U | -- | 0.1 U | 1 U | 0.5 U | 0.5 U | 0.5 U | -- | -- | -- |
| VMP-57 | | | | | | | | | | | | | | | | | | | | | | | | | | | | | | |
| 6 | 12/07/11 | ORIG | TO-15 | 0.82 U | 9.8 | 9 | 0.32 U | 0.32 U | 6.2 | 0.24 U | 0.24 U | 1.2 | 0.24 U | 0.37 U | 0.044 J | 0.16 U | 0.21 U | 9.6 | 48 | 0.042 J | 0.15 U | 0.3 J | 0.19 U | 0.19 J | 0.26 U | 0.33 | 0.12 J | 0.93 U | 0.73 U | 0.18 UJ |
| 12 | 12/07/11 | ORIG | TO-15 | 0.29 U | 11 | 19 | 0.11 U | 0.11 U | 2.3 | 0.085 U | 0.085 U | 4.3 | 0.11 | 0.13 U | 0.095 J | 0.056 U | 0.073 U | 2.8 | 13 | 0.014 J | 0.054 U | 0.36 | 0.032 J | 0.22 | 0.041 J | 0.41 | 0.15 | 0.33 U | 0.26 U | 0.062 UJ |
| 24 | 12/07/11 | ORIG | TO-15 | 0.41 U | 7.1 | 31 | 0.16 U | 0.16 U | 2 | 0.12 U | 0.12 U | 9.4 | 0.33 | 0.19 U | 0.3 | 0.078 U | 0.1 U | 2.4 | 13 | 0.15 U | 0.076 U | 0.16 J | 0.048 J | 0.034 J | 0.13 U | 0.14 | 0.059 J | 0.11 J | 0.37 U | 0.088 UJ |
| 55 | 12/07/11 | ORIG | TO-15 | 0.82 U | 5.9 J | 70 J | 0.32 U | 0.32 U | 1.1 J | 0.24 U | 0.24 U | 24 J | 0.51 J | 0.37 U | 0.059 J | 0.16 U | 0.21 U | 1 J | 5.2 J | 0.29 U | 0.15 U | 0.16 J | 0.19 U | 0.046 J | 0.26 U | 0.26 U | 0.26 U | 0.93 U | 0.73 U | 0.18 UJ |
| 55 | 12/07/11 | CONF | TO-15 | 0.014 U | 14 J | 44 J | 0.0066 | 0.0055 U | 2.4 J | 0.21 | 0.004 U | 15 J | 0.94 J | 0.0063 U | 0.25 J | 0.0026 U | 0.035 U | 2 J | 10 J | 0.013 | 0.0026 U | 0.028 J | 0.061 | 0.067 J | 0.005 | 0.017 U | 0.0061 | 0.012 U | -- | 0.0088 U |
| 69 | 12/07/11 | ORIG | TO-15 | 13 U | 58 | 1200 | 5 U | 5 U | 40 | 0.69 J | 3.7 U | 260 | 8.5 | 5.8 U | 1.2 J | 2.4 U | 3.2 U | 23 | 88 | 4.5 U | 2.3 U | 11 U | 2.9 U | 3.5 U | 4 U | 4 U | 4 U | 14 U | 11 U | 2.7 UJ |
| 40 | 12/08/11 | ORIG | TO-15 | 2.8 U | 11 | 240 | 1.1 U | 1.1 U | 6 | 0.29 J | 0.83 UJ | 110 | 4.2 | 1.3 U | 0.61 J | 0.54 U | 0.72 U | 6.2 | 28 | 1 U | 0.53 U | 1.7 J | 0.16 J | 0.9 | 0.9 U | 0.9 U | 0.9 U | 1.1 J | 2.5 U | 0.61 U |
| 60 | 12/08/11 | ORIG | TO-15 | 14 U | 42 | 1000 | 5.7 U | 5.7 U | 22 | 4.3 U | 4.3 UJ | 320 | 7.8 | 6.6 U | 0.97 J | 2.8 U | 3.7 U | 20 | 78 | 5.2 U | 2.7 U | 5.6 J | 3.4 U | 1.6 J | 4.6 U | 4.6 U | 4.6 U | 16 U | 13 U | 3.1 U |
| VMP-58 | | | | | | | | | | | | | | | | | | | | | | | | | | | | | | |
| 6 | 12/07/11 | ORIG | TO-15 | 4.8 U | 8.2 | 1.5 J | 1.9 U | 1.9 U | 20 | 1.4 U | 1.4 U | 1.4 U | 1.4 U | 2.2 U | 1.7 U | 0.93 U | 1.2 U | 63 | 500 | 0.35 J | 0.9 U | 2.8 J | 1.1 U | 1.2 J | 1.5 U | 2.2 | 0.74 J | 5.5 U | 4.3 U | 1 UJ |
| 12 | 12/07/11 | ORIG | TO-15 | 8.6 U | 9.9 | 2 J | 3.4 U | 3.4 U | 31 | 2.5 U | 2.5 U | 2.5 U | 2.5 U | 3.9 U | 3 U | 1.6 U | 2.2 U | 87 | 740 | 0.58 J | 1.6 U | 12 | 0.65 J | 5.4 | 1.5 J | 9.7 | 3.6 | 9.7 U | 7.7 U | 1.8 UJ |
| 24 | 12/07/11 | ORIG | TO-15 | 0.027 U | 0.013 U | 0.01 U | 0.011 U | 0.011 U | 0.0077 U | 0.0079 U | 0.0079 U | 0.0077 U | 0.0077 U | 0.012 U | 0.0095 U | 0.0051 U | 0.0068 U | 0.011 U | 0.015 U | 0.0032 J | 0.005 U | 0.018 J | 0.0062 U | 0.0019 J | 0.0084 U | 0.0084 U | 0.0084 U | 0.03 U | 0.0043 J | 0.0057 UJ |
| 40 | 12/07/11 | ORIG | TO-15 | 4 U | 6.3 | 2.4 | 1.6 U | 1.6 U | 46 | 1.2 U | 1.2 U | 0.41 J | 1.2 U | 1.8 U | 1.2 J | 0.77 U | 1 U | 59 | 330 | 0.72 J | 0.75 U | 16 | 2.4 | 28 | 6.6 | 44 | 16 | 1.4 J | 1.5 J | 0.86 UJ |
| 55 | 12/07/11 | ORIG | TO-15 | 0.8 U | 9.7 J | 1.2 J | 0.32 U | 0.32 U | 4.5 J | 0.24 U | 0.24 U | 0.23 U | 0.23 U | 0.37 U | 0.28 U | 0.15 U | 0.2 U | 5.7 J | 60 J | 0.032 J | 0.15 U | 0.55 J | 0.19 U | 0.096 J | 0.25 U | 0.25 U | 0.25 U | 0.91 U | 0.72 U | 0.17 UJ |
| 55 | 12/07/11 | DUP | TO-15 | 14 U | 100 J | 15 J | 5.5 U | 5.5 U | 110 J | 4.1 U | 4.1 U | 4 U | 4 U | 6.4 U | 3.2 J | 2.7 U | 3.5 U | 130 J | 1200 J | 1.1 J | 2.6 U | 26 J | 1.4 J | 16 J | 1.5 J | 6 | 2.7 J | 3.5 J | 2 J | 3 UJ |
| 60 | 12/07/11 | ORIG | TO-15 | 29 U | 170 | 30 | 11 U | 11 U | 270 | 8.5 U | 8.5 U | 8.4 U | 8.4 U | 13 U | 7.2 J | 5.6 U | 7.3 U | 310 | 2600 | 2.6 J | 5.4 U | 79 | 2.7 J | 12 | 1.8 J | 9.5 | 3.8 J | 17 J | 4.7 J | 6.2 UJ |
| 66 | 12/07/11 | ORIG | TO-15 | 27 U | 250 | 89 | 11 U | 11 U | 250 | 7.9 U | 7.9 U | 7.7 U | 7.7 U | 12 U | 9 J | 5.1 U | 6.8 U | 270 | 2400 | 3.5 J | 5 U | 89 | 2.8 J | 16 | 2.5 J | 9.4 | 4.1 J | 9.2 J | 5.4 J | 5.7 UJ |
| VMP-59 | | | | | | | | | | | | | | | | | | | | | | | | | | | | | | |
| 6 | 12/08/11 | ORIG | TO-15 | 4.2 U | 36 | 20 | 1.7 U | 1.7 U | 63 | 1.2 U | 1.2 UJ | 0.3 J | 1.2 U | 1.9 U | 0.41 J | 0.8 U | 1.1 U | 84 | 530 | 0.31 J | 0.78 U | 3.2 J | 0.2 J | 0.63 J | 1.3 U | 1.3 | 0.6 J | 4.7 U | 3.7 U | 0.89 U |
| 12 | 12/08/11 | ORIG | TO-15 | 2.6 U | 47 | 13 | 1 U | 1 U | 47 | 0.77 U | 0.77 UJ | 0.76 U | 0.76 U | 1.2 U | 0.16 J | 0.5 U | 0.66 U | 50 | 320 | 0.22 J | 0.49 U | 4 | 0.61 U | 0.44 J | 0.83 U | 0.83 U | 0.83 U | 3 U | 2.3 U | 0.56 U |
| 24 | 12/08/11 | ORIG | TO-15 | 4.5 U | 37 | 17 | 1.8 U | 1.8 U | 71 | 1.3 U | 1.3 UJ | 1.3 U | 1.3 U | 2.1 U | 1.6 U | 0.87 U | 1.1 U | 58 | 320 | 0.31 J | 0.84 U | 2.2 J | 1.1 U | 1.2 U | 1.4 U | 1.4 U | 1.4 U | 5.1 U | 4.1 U | 0.97 U |
| 24 | 12/08/11 | DUP | TO-15 | 4.1 U | 37 | 18 | 1.6 U | 1.6 U | 72 | 1.2 U | 1.2 UJ | 1.2 U | 1.2 U | 1.9 U | 1.5 U | 0.78 U | 1 U | 59 | 330 | 0.25 J | 0.76 U | 2 J | 0.95 U | 0.19 J | 1.3 U | 1.3 U | 1.3 U | 4.6 U | 3.7 U | 0.88 U |
| 40 | 12/08/11 | ORIG | TO-15 | 12 U | 51 | 43 | 4.8 U | 4.8 U | 200 | 3.6 U | 3.6 UJ | 3.5 U | 3.5 U | 5.5 U | 4.3 U | 2.3 U | 3.1 U | 160 | 990 | 0.71 J | 2.2 U | 7.6 J | 2.8 U | 1 J | 3.8 U | 3.8 U | 3.8 U | 14 U | 11 U | 2.6 U |
| 55 | 12/08/11 | ORIG | TO-15 | 0.028 U | 1 | 0.25 | 0.011 U | 0.011 U | 0.24 | 0.0083 U | 0.0083 UJ | 0.0082 U | 0.0082 U | 0.013 U | 0.01 U | 0.0054 U | 0.0072 U | 0.084 | 0.44 | 0.0037 J | 0.0053 U | 0.067 | 0.0029 J | 0.011 | 0.0012 J | 0.0042 J | 0.0013 J | 0.032 U | 0.012 J | 0.0068 |
| 60 | 12/08/11 | ORIG | TO-15 | 14 U | 350 | 170 | 5.4 U | 5.4 U | 330 | 4 U | 4 UJ | 3.9 U | 3.9 U | 6.2 U | 4.8 U | 2.6 U | 3.4 U | 190 | 1100 | 0.84 J | 2.5 U | 9.6 J | 3.2 U | 1.2 J | 4.3 U | 4.3 U | 4.3 U | 15 U | 12 U | 2.9 U |
| 70 | 12/08/11 | ORIG | TO-15 | 3.2 U | 21 | 18 | 1.3 U | 1.3 U | 60 | 0.94 U | 0.94 UJ | 0.92 U | 0.92 U | 1.5 U | 1.1 U | 0.62 U | 0.81 U | 55 | 240 | 1.2 U | 0.6 U | 2 J | 0.75 U | 0.23 J | 1 U | 0.29 J | 1 U | 3.6 U | 2.9 U | 0.69 U |
| VMP-60 | | | | | | | | | | | | | | | | | | | | | | | | | | | | | | |
| 6 | 12/08/11 | ORIG | TO-15 | 0.26 U | 16 | 15 | 0.1 U | 0.1 U | 1.2 | 0.076 U | 0.076 U | 0.21 | 0.074 U | 0.12 U | 0.063 J | 0.049 U | 0.065 U | 4.9 | 24 | 0.093 U | 0.048 U | 0.2 J | 0.015 J | 0.029 J | 0.081 U | 0.081 U | 0.081 U | 0.29 U | 0.23 U | 0.055 U |
| 12 | 12/08/11 | ORIG | TO-15 | 0.56 U | 38 | 31 | 0.22 U | 0.22 U | 2.7 | 0.16 U | 0.16 U | 0.3 | 0.16 U | 0.25 U | 0.12 J | 0.11 U | 0.14 U | 10 | 56 | 0.2 U | 0.1 U | 0.34 J | 0.13 U | 0.02 J | 0.18 U | 0.18 U | 0.18 U | 0.63 U | 0.5 U | 0.12 U |
| 24 | 12/08/11 | ORIG | TO-15 | 0.93 U | 63 | 53 | 0.37 U | 0.37 U | 6.1 | 0.27 U | 0.27 U | 0.32 | 0.27 U | 0.42 U | 0.17 J | 0.18 U | 0.23 U | 17 | 88 | 0.33 U | 0.17 U | 0.52 J | 0.22 U | 0.053 J | 0.29 U | 0.29 U | 0.29 U | 1 U | 0.83 U | 0.2 U |
| 40 | 12/08/11 | ORIG | TO-15 | 0.5 U | 15 | 20 J | 0.2 U | 0.2 U | 3.4 J | 0.15 U | 0.15 U | 0.14 U | 0.14 U | 0.23 U | 0.11 J | 0.095 U | 0.13 U | 10 J | 47 J | 0.019 J | 0.092 U | 0.26 J | 0.066 J | 0.13 J | 0.16 U | 0.14 J | 0.054 J | 0.32 J | 0.44 U | 0.11 U |
| 40 | 12/08/11 | DUP | TO-15 | 0.87 U | 18 | 26 J | 0.34 U | 0.34 U | 4.9 J | 0.26 U | 0.26 U | 0.63 | 0.25 U | 0.4 U | 0.15 J | 0.17 U | 0.22 U | 16 J | 72 J | 0.31 U | 0.16 U | 0.52 J | 0.082 J | 0.13 J | 0.27 U | 0.17 J | 0.065 J | 0.48 J | 0.78 U | 0.19 U |
| 55 | 12/08/11 | ORIG | TO-15 | 0.03 U | 0.49 | 0.13 | 0.012 U | 0.012 U | 0.012 | 0.0089 U | 0.0089 U | 0.0087 U | 0.0087 U | 0.014 U | 0.011 U | 0.0058 U | 0.0067 J | 0.0072 J | 0.035 | 0.0035 J | 0.0056 U | 0.051 | 0.0064 J | 0.012 | 0.0021 J | 0.0071 J | 0.0024 J | 0.0069 J | 0.0063 J | 0.007 |
| 60 | 12/08/11 | ORIG | TO-15 | 0.83 U | 31 | 34 | 0.33 U | 0.33 U | 6.2 | 0.25 U | 0.25 U | 0.24 U | 0.24 U | 0.38 U | 0.13 J | 0.16 U | 0.21 U | 15 | 73 | 0.3 U | 0.16 U | 0.4 J | 0.19 U | 0.075 J | 0.26 U | 0.26 U | 0.26 U | 0.94 U | 0.75 U | 0.18 U |
| 70 | 12/08/11 | ORIG | TO-15 | 0.93 U | 26 | 32 | 0.37 U | 0.37 U | 5.8 | 0.28 U | 0.28 U | 0.3 | 0.27 U | 0.43 U | 0.14 J | 0.18 U | 0.24 U | 14 | 68 | 0.34 U | 0.17 U | 0.46 J | 0.22 U | 0.15 J | 0.3 U | 0.15 J | 0.068 J | 1.1 U | 0.84 U | 0.2 U |

# Table 2-3
# Omega Chemical Superfund Site
# Volatile Organic Compounds (VOCs) Analytical Summary
# Vapor Monitoring Probe Analytical Results

| Sample Location / Depth (ft) | Sample Date | Sample Type | Analytical Method | 1,1,2,2-PCA | PCE | TCE | 1,1,1-TCA | 1,1,2-TCA | 1,1-DCE | 1,1-DCA | 1,2-DCA | cis-1,2-DCE | trans-1,2-DCE | CTC | CFM | CET | MC | Freon 11 | Freon 113 | Freon 12 | VC | ACT | BEN | TOL | EBN | MPX | OX | CDS | IPA | MEK |
|---|---|---|---|---|---|---|---|---|---|---|---|---|---|---|---|---|---|---|---|---|---|---|---|---|---|---|---|---|---|---|
| VMP-61 | | | | | | | | | | | | | | | | | | | | | | | | | | | | | | |
| 6 | 12/07/11 | ORIG | TO-15 | 0.21 U | 0.76 | 0.084 U | 0.085 U | 0.085 U | 2 | 0.063 U | 0.063 U | 0.062 U | 0.062 U | 0.098 U | 0.076 U | 0.041 U | 0.054 U | 2.2 | 17 | 0.033 J | 0.04 U | 0.12 J | 0.05 U | 0.015 J | 0.068 U | 0.023 J | 0.068 U | 0.24 U | 0.19 U | 0.046 UJ |
| 12 | 12/07/11 | ORIG | TO-15 | 0.33 U | 1.3 | 0.13 U | 0.13 U | 0.13 U | 3.3 | 0.098 U | 0.098 U | 0.096 U | 0.096 U | 0.15 U | 0.12 U | 0.064 U | 0.084 U | 3.3 | 26 | 0.047 J | 0.062 U | 0.17 J | 0.019 J | 0.048 J | 0.11 U | 0.033 J | 0.11 U | 0.13 J | 0.3 U | 0.072 UJ |
| 24 | 12/07/11 | ORIG | TO-15 | 1.1 U | 4.1 | 0.43 U | 0.44 U | 0.44 U | 12 | 0.33 U | 0.33 U | 0.32 U | 0.32 U | 0.51 U | 0.39 U | 0.21 U | 0.28 U | 10 | 76 | 0.14 J | 0.21 U | 0.47 J | 0.26 U | 0.15 J | 0.35 U | 0.35 U | 0.14 J | 1.3 U | 0.99 U | 0.24 UJ |
| 24 | 12/07/11 | CONF | TO-15 | 0.0069 U | 4.8 | 0.081 | 0.0027 U | 0.0027 U | 12 | 0.002 U | 0.002 U | 0.002 U | 0.002 U | 0.0031 U | 0.024 | 0.0013 U | 0.017 U | 9.4 | 70 | 0.1 J | 0.0013 U | 0.012 J | 0.011 | 0.014 J | 0.0022 U | 0.0087 U | 0.0022 U | 0.0074 | -- | 0.01 |
| 40 | 12/07/11 | ORIG | TO-15 | 0.83 U | 0.63 | 0.33 U | 0.33 U | 0.33 U | 7.6 | 0.25 U | 0.25 U | 0.24 U | 0.24 U | 0.38 U | 0.3 U | 0.16 U | 0.21 U | 9.1 | 60 | 0.22 J | 0.16 U | 0.38 J | 0.067 J | 0.15 J | 0.26 U | 0.26 U | 0.26 U | 0.52 J | 0.75 U | 0.18 UJ |
| 55 | 12/07/11 | ORIG | TO-15 | 4.7 U | 31 | 1.6 J | 1.9 U | 1.9 U | 37 | 1.4 U | 1.4 U | 1.4 U | 1.4 U | 2.2 U | 1.7 U | 0.9 U | 1.2 U | 53 | 520 | 0.88 J | 0.88 U | 3.7 J | 1.1 U | 0.6 J | 0.42 J | 0.93 J | 0.34 J | 5.3 U | 4.2 U | 1 U |
| 60 | 12/07/11 | ORIG | TO-15 | 5.4 U | 16 | 0.5 J | 2.2 U | 2.2 U | 34 | 1.6 U | 1.6 U | 1.6 U | 1.6 U | 2.5 U | 1.9 U | 1 U | 1.4 U | 58 | 540 | 0.95 J | 1 U | 3.3 J | 1.3 U | 0.65 J | 1.7 U | 0.81 J | 0.37 J | 6.2 U | 4.9 U | 1.2 UJ |
| 71 | 12/07/11 | ORIG | TO-15 | 3.3 U | 1.6 | 1.3 U | 1.3 U | 1.3 U | 16 | 0.96 U | 0.96 U | 0.94 U | 0.94 U | 1.5 U | 1.2 U | 0.63 U | 0.83 U | 31 | 310 | 0.72 J | 0.61 U | 1.9 J | 0.76 U | 0.38 J | 1 U | 1 U | 1 U | 0.79 J | 2.9 U | 0.7 UJ |
| VMP-62 | | | | | | | | | | | | | | | | | | | | | | | | | | | | | | |
| 6 | 08/28/12 | ORIG | TO-15 | 0.27 U | 0.17 | 0.11 U | 0.11 U | 0.11 U | 0.079 U | 0.081 U | 0.081 U | 0.079 U | 0.079 U | 0.13 U | 0.098 U | 0.053 U | 0.69 U | 38 | 190 | 0.15 | 0.051 U | 0.19 U | 0.064 U | 0.075 U | 0.087 U | 0.35 U | 0.087 U | 0.25 U | 0.49 U | 0.18 U |
| 12 | 08/28/12 | ORIG | TO-15 | 0.17 U | 0.085 U | 0.067 U | 0.068 U | 0.068 U | 0.05 U | 0.051 U | 0.051 U | 0.05 U | 0.05 U | 0.079 U | 0.061 U | 0.033 U | 0.43 U | 3 | 12 | 0.062 U | 0.032 U | 0.12 U | 0.04 U | 0.047 U | 0.054 U | 0.22 U | 0.054 U | 0.17 | 0.31 U | 0.11 U |
| 12 | 08/28/12 | DUP | TO-15 | 0.069 U | 0.034 U | 0.027 U | 0.027 U | 0.027 U | 0.02 U | 0.02 U | 0.02 U | 0.02 U | 0.02 U | 0.031 U | 0.024 U | 0.013 U | 0.17 U | 4.3 | 17 | 0.025 U | 0.013 U | 0.048 U | 0.016 U | 0.031 | 0.022 U | 0.087 U | 0.022 U | 0.2 | 0.12 U | 0.044 U |
| 24 | 08/28/12 | ORIG | TO-15 | 0.27 U | 0.14 U | 0.11 U | 0.11 U | 0.11 U | 0.079 U | 0.081 U | 0.081 U | 0.079 U | 0.079 U | 0.13 U | 0.098 U | 0.053 U | 0.69 U | 17 | 69 | 0.099 | 0.051 U | 0.19 U | 0.064 U | 0.091 | 0.087 U | 0.35 U | 0.087 U | 0.51 | 0.49 U | 0.18 U |
| 40 | 08/28/12 | ORIG | TO-15 | 0.27 U | 0.14 U | 0.11 U | 0.11 U | 0.11 U | 0.079 U | 0.081 U | 0.081 U | 0.079 U | 0.079 U | 0.13 U | 0.098 U | 0.053 U | 0.69 U | 34 | 150 | 0.17 | 0.051 U | 0.19 U | 0.064 U | 0.075 U | 0.087 U | 0.35 U | 0.087 U | 0.25 U | 0.49 U | 0.18 U |
| 50 | 08/28/12 | ORIG | TO-15 | 0.0069 U | 0.0059 | 0.0034 | 0.0027 U | 0.0027 U | 0.002 U | 0.002 U | 0.002 U | 0.002 U | 0.002 U | 0.0031 U | 0.0024 U | 0.0013 U | 0.017 U | 0.13 | 0.25 | 0.0028 | 0.0013 U | 0.093 | 0.0043 | 0.024 | 0.0035 | 0.012 | 0.005 | 0.092 | 0.012 U | 0.014 |
| 60 | 08/28/12 | ORIG | TO-15 | 0.034 U | 0.017 U | 0.013 U | 0.014 U | 0.014 U | 0.0099 U | 0.01 U | 0.01 U | 0.0099 U | 0.0099 U | 0.016 U | 0.012 U | 0.0066 U | 0.087 U | 1.2 | 2.8 | 0.012 U | 0.0064 U | 0.081 | 0.01 | 0.019 | 0.011 U | 0.043 U | 0.011 U | 0.66 | 0.061 U | 0.022 U |
| 70 | 08/28/12 | ORIG | TO-15 | 0.0069 U | 0.0034 U | 0.0042 | 0.0027 U | 0.0027 U | 0.002 U | 0.002 U | 0.002 U | 0.002 U | 0.002 U | 0.0031 U | 0.0024 U | 0.0013 U | 0.017 U | 0.01 | 0.049 | 0.0025 U | 0.0013 U | 0.072 | 0.0016 U | 0.0059 | 0.0022 U | 0.0087 U | 0.0023 | 0.008 | 0.012 U | 0.0069 |
| VMP-63 | | | | | | | | | | | | | | | | | | | | | | | | | | | | | | |
| 6 | 07/17/12 | ORIG | TO-15 | 0.27 U | 120 | 0.18 | 0.11 U | 0.11 U | 0.079 U | 0.081 U | 0.081 U | 0.079 U | 0.079 U | 0.13 U | 0.098 U | 0.053 U | 0.69 U | 2.5 | 15 | 0.099 U | 0.051 U | 0.19 U | 0.064 U | 0.075 U | 0.087 U | 0.35 U | 0.087 U | 0.25 U | 0.49 U | 0.18 U |
| 12 | 07/17/12 | ORIG | TO-15 | 0.27 U | 190 | 0.61 | 0.11 U | 0.11 U | 0.079 U | 0.081 U | 0.081 U | 0.079 U | 0.079 U | 0.13 U | 0.098 U | 0.053 U | 0.69 U | 5.1 | 29 | 0.099 U | 0.051 U | 0.19 U | 0.064 U | 0.075 U | 0.087 U | 0.35 U | 0.087 U | 0.25 U | 0.49 U | 0.18 U |
| 24 | 07/17/12 | ORIG | TO-15 | 0.27 U | 120 | 0.13 | 0.11 U | 0.11 U | 0.079 U | 0.081 U | 0.081 U | 0.079 U | 0.079 U | 0.13 U | 0.098 U | 0.053 U | 0.69 U | 3.2 | 18 | 0.099 U | 0.051 U | 0.19 U | 0.064 U | 0.075 U | 0.087 U | 0.35 U | 0.087 U | 0.25 U | 0.49 U | 0.18 U |
| 40 | 07/17/12 | ORIG | TO-15 | 0.27 U | 50 | 0.3 | 0.11 U | 0.11 U | 0.079 U | 0.081 U | 0.081 U | 0.079 U | 0.079 U | 0.13 U | 0.098 U | 0.053 U | 0.69 U | 3.5 | 18 | 0.099 U | 0.051 U | 0.19 U | 0.064 U | 0.075 U | 0.087 U | 0.35 U | 0.087 U | 0.65 | 0.49 U | 0.18 U |
| 50 | 07/17/12 | ORIG | TO-15 | 0.27 U | 370 | 3 | 0.11 U | 0.11 U | 0.23 | 0.081 U | 0.081 U | 0.079 U | 0.079 U | 0.13 U | 0.098 U | 0.053 U | 0.69 U | 9.9 | 80 | 0.099 U | 0.051 U | 0.19 U | 0.064 U | 0.075 U | 0.087 U | 0.35 U | 0.087 U | 0.25 U | 0.49 U | 0.18 U |
| 60 | 07/17/12 | ORIG | TO-15 | 3.4 U | 390 | 8.7 | 1.4 U | 1.4 U | 1.3 | 1 U | 1 U | 0.99 U | 0.99 U | 1.6 U | 1.2 U | 0.66 U | 8.7 U | 32 | 170 | 1.2 U | 0.64 U | 2.4 U | 0.8 U | 0.94 U | 1.1 U | 4.3 U | 1.1 U | 3.1 U | 6.1 U | 2.2 U |
| 70 | 07/17/12 | ORIG | TO-15 | 0.27 U | 82 | 2.1 | 0.11 U | 0.11 U | 1.3 | 0.081 U | 0.081 U | 0.079 U | 0.079 U | 0.13 U | 0.12 | 0.053 U | 0.69 U | 41 | 210 | 0.099 U | 0.051 U | 0.19 U | 0.14 | 0.11 | 0.087 U | 0.35 U | 0.087 U | 0.25 U | 0.49 U | 0.18 U |
| VMP-64 | | | | | | | | | | | | | | | | | | | | | | | | | | | | | | |
| 6 | 07/18/12 | ORIG | TO-15 | 0.27 U | 40 | 0.53 | 0.11 U | 0.11 U | 0.99 | 0.081 U | 0.081 U | 0.079 U | 0.079 U | 0.13 U | 0.098 U | 0.053 U | 0.69 U | 89 | 670 | 0.14 | 0.051 U | 0.19 U | 0.064 U | 0.075 U | 0.087 U | 0.35 U | 0.087 U | 0.25 U | 0.49 U | 0.18 U |
| 6 | 07/18/12 | DUP | TO-15 | 0.27 U | 50 | 0.75 | 0.11 U | 0.11 U | 1.4 | 0.081 U | 0.081 U | 0.079 U | 0.079 U | 0.13 U | 0.098 U | 0.053 U | 0.69 U | 100 | 750 | 0.2 | 0.051 U | 0.19 U | 0.064 U | 0.075 U | 0.087 U | 0.35 U | 0.087 U | 0.25 U | 0.49 U | 0.18 U |
| 12 | 07/18/12 | ORIG | TO-15 | 0.27 U | 53 | 0.67 | 0.11 U | 0.11 U | 1.2 | 0.081 U | 0.081 U | 0.079 U | 0.079 U | 0.13 U | 0.098 U | 0.053 U | 0.69 U | 96 | 700 | 0.14 | 0.051 U | 0.19 U | 0.064 U | 0.075 U | 0.087 U | 0.35 U | 0.087 U | 0.25 U | 0.49 U | 0.18 U |
| 24 | 07/18/12 | SPLIT | TO-15 | 4.8 U | 9.5 | 3.7 U | 3.8 U | 3.8 U | 2.8 U | 2.8 U | 2.8 U | 2.8 U | 2.8 U | 11 UJ | 3.4 U | 1.8 U | 2.4 U | 40 | 290 | 3.4 U | 1.8 U | 4.1 U | 2.2 U | 2.6 U | 3 U | 3 U | 3 U | 5.4 U | 8.6 U | 5.1 U |
| 24 | 07/18/12 | ORIG | TO-15 | 1.7 U | 12 | 0.67 U | 0.68 U | 0.68 U | 0.82 | 0.51 U | 0.51 U | 0.5 U | 0.5 U | 0.79 U | 0.61 U | 0.33 U | 4.3 U | 32 | 170 | 0.62 U | 0.32 U | 1.2 U | 0.4 U | 0.47 U | 0.54 U | 2.2 U | 0.54 U | 1.6 U | 3.1 U | 1.1 U |
| 40 | 07/18/12 | ORIG | TO-15 | 0.27 U | 21 | 0.53 | 0.11 U | 0.11 U | 0.86 | 0.081 U | 0.081 U | 0.079 U | 0.079 U | 0.13 U | 0.098 U | 0.053 U | 0.69 U | 51 | 210 | 0.099 U | 0.051 U | 0.19 U | 0.064 U | 0.075 U | 0.087 U | 0.35 U | 0.087 U | 0.25 U | 1.2 | 0.18 U |
| 50 | 07/18/12 | SPLIT | TO-15 | 2.8 U | 32 | 2.2 U | 2.2 U | 2.2 U | 1.7 | 1.7 U | 1.7 U | 1.6 U | 1.6 U | 6.5 UJ | 2 U | 1.1 U | 1.4 U | 33 | 170 | 2 U | 1.1 U | 2.4 U | 1.3 U | 1.6 U | 1.8 U | 1.8 U | 1.8 U | 3.2 U | 5.1 U | 3 U |
| 50 | 07/18/12 | ORIG | TO-15 | 0.27 U | 14 | 0.45 | 0.11 U | 0.11 U | 0.73 | 0.081 U | 0.081 U | 0.079 U | 0.079 U | 0.13 U | 0.098 U | 0.053 U | 0.69 U | 21 | 160 | 0.099 U | 0.051 U | 0.19 U | 0.064 U | 0.075 U | 0.087 U | 0.35 U | 0.087 U | 0.25 U | 0.49 U | 0.18 U |
| 60 | 07/18/12 | ORIG | TO-15 | 0.27 U | 21 | 0.75 | 0.11 U | 0.11 U | 1 | 0.081 U | 0.081 U | 0.079 U | 0.079 U | 0.13 U | 0.098 U | 0.053 U | 0.69 U | 20 | 100 | 0.099 U | 0.051 U | 0.29 | 0.064 U | 0.18 | 0.087 U | 0.35 U | 0.087 U | 0.27 | 0.49 U | 0.18 U |
| 70 | 07/19/12 | ORIG | TO-15 | 0.89 U | 0.5 | 0.35 U | 0.35 U | 0.35 U | 0.33 | 0.26 U | 0.26 U | 0.26 U | 0.26 U | 0.41 U | 0.31 U | 0.17 U | 2.2 U | 9.9 | 25 | 0.32 U | 0.16 U | 3.1 | 0.21 U | 0.24 U | 0.28 U | 1.1 U | 0.28 U | 0.8 U | 18 | 0.57 U |
| VMP-65 | | | | | | | | | | | | | | | | | | | | | | | | | | | | | | |
| 6 | 07/18/12 | ORIG | TO-15 | 1.4 U | 30 | 6 | 0.55 U | 0.55 U | 7.6 | 0.4 U | 0.4 U | 0.4 U | 0.4 U | 0.63 U | 0.49 U | 0.26 U | 3.5 U | 87 | 1200 | 0.58 | 0.26 U | 0.95 U | 0.32 U | 0.38 U | 0.43 U | 1.7 U | 0.43 U | 1.2 U | 2.5 U | 0.88 U |
| 12 | 07/18/12 | ORIG | TO-15 | 1.4 U | 27 | 7.4 | 0.55 U | 0.55 U | 11 | 0.4 U | 0.4 U | 0.4 U | 0.4 U | 0.63 U | 0.49 U | 0.26 U | 3.5 U | 84 | 1200 | 0.54 | 0.26 U | 0.95 U | 0.32 U | 0.38 U | 0.43 U | 1.7 U | 0.43 U | 1.2 U | 2.5 U | 0.88 U |
| 24 | 07/18/12 | ORIG | TO-15 | 2.2 U | 7.4 | 3.7 | 0.87 U | 0.87 U | 18 | 0.65 U | 0.65 U | 0.63 U | 0.63 U | 1 U | 0.78 U | 0.42 U | 5.6 U | 84 | 1100 | 0.79 U | 0.41 U | 1.5 U | 0.51 U | 0.6 U | 0.69 U | 2.8 U | 0.69 U | 2 U | 3.9 U | 1.4 U |
| 40 | 07/18/12 | ORIG | TO-15 | 3.4 U | 11 | 6.9 | 1.4 U | 1.4 U | 18 | 1 U | 1 U | 0.99 U | 0.99 U | 1.6 U | 1.2 U | 0.66 U | 8.7 U | 73 | 990 | 1.2 U | 0.64 U | 2.4 U | 0.8 U | 0.94 U | 1.1 U | 4.3 U | 1.1 U | 3.1 U | 6.1 U | 2.2 U |
| 50 | 07/18/12 | ORIG | TO-15 | 2.2 U | 3.8 | 5 | 0.87 U | 0.87 U | 34 | 0.65 U | 0.65 U | 0.63 U | 0.63 U | 1 U | 0.78 U | 0.42 U | 5.6 U | 100 | 1100 | 0.79 U | 0.41 U | 1.5 U | 0.51 U | 0.6 U | 0.69 U | 2.8 U | 0.69 U | 2 U | 3.9 U | 1.4 U |
| 50 | 07/18/12 | DUP | TO-15 | 1.4 U | 5 | 5.5 | 0.55 U | 0.55 U | 34 | 0.4 U | 0.4 U | 0.4 U | 0.4 U | 0.63 U | 0.49 U | 0.26 U | 3.5 U | 97 | 1000 | 0.76 | 0.26 U | 0.95 U | 0.32 U | 0.38 U | 0.43 U | 1.7 U | 0.43 U | 1.2 U | 2.5 U | 0.88 U |
| 60 | 07/18/12 | ORIG | TO-15 | 1.4 U | 39 | 18 | 0.55 U | 0.55 U | 34 | 0.4 U | 0.4 U | 0.4 U | 0.4 U | 0.63 U | 0.49 U | 0.26 U | 3.5 U | 88 | 1000 | 0.69 | 0.26 U | 0.95 U | 0.32 U | 0.38 U | 0.43 U | 1.7 U | 0.43 U | 1.2 U | 2.5 U | 0.88 U |
| 70 | 07/18/12 | ORIG | TO-15 | 1.4 U | 40 | 19 | 0.55 U | 0.55 U | 34 | 0.4 U | 0.4 U | 0.4 U | 0.4 U | 0.63 U | 0.49 U | 0.26 U | 3.5 U | 87 | 1000 | 0.69 | 0.26 U | 0.95 U | 0.32 U | 0.38 U | 0.43 U | 1.7 U | 0.43 U | 1.2 U | 2.5 U | 0.88 U |
| VMP-66 | | | | | | | | | | | | | | | | | | | | | | | | | | | | | | |
| 6 | 07/18/12 | ORIG | TO-15 | 0.086 U | 2.5 | 32 | 0.034 U | 0.034 U | 0.025 U | 0.025 U | 0.025 U | 0.025 U | 0.025 U | 0.039 U | 0.08 | 0.016 U | 0.22 U | 2.7 | 23 | 0.031 U | 0.016 U | 0.059 U | 0.02 U | 0.024 U | 0.027 U | 0.11 U | 0.027 U | 0.078 U | 0.28 | 0.055 U |
| 12 | 07/18/12 | SPLIT | TO-15 | 0.57 U | 1.2 | 29 | 0.46 U | 0.46 U | 0.33 U | 0.34 U | 0.34 U | 0.33 U | 0.33 U | 1.3 UJ | 0.41 U | 0.22 U | 0.29 U | 2.1 | 25 | 0.41 U | 0.21 U | 0.5 U | 0.27 U | 0.32 U | 0.36 U | 0.36 U | 0.36 U | 0.65 U | 1.2 | 0.62 U |
| 12 | 07/18/12 | ORIG | TO-15 | 0.11 U | 1.8 | 38 | 0.044 U | 0.044 U | 0.032 U | 0.032 U | 0.032 U | 0.032 U | 0.032 U | 0.05 U | 0.063 | 0.021 U | 0.28 U | 2.8 | 30 | 0.04 U | 0.02 U | 0.076 U | 0.026 U | 0.03 U | 0.035 U | 0.14 U | 0.035 U | 0.1 U | 0.52 | 0.071 U |
| 24 | 07/18/12 | ORIG | TO-15 | 0.11 U | 0.2 | 13 | 0.044 U | 0.044 U | 0.094 | 0.032 U | 0.032 U | 0.044 | 0.032 U | 0.05 U | 0.039 U | 0.021 U | 0.28 U | 2.1 | 20 | 0.04 U | 0.02 U | 0.076 U | 0.06 | 0.046 | 0.035 U | 0.14 U | 0.035 U | 0.77 | 0.38 | 0.071 U |
| 40 | 07/18/12 | ORIG | TO-15 | 0.14 U | 1.5 | 54 | 0.055 U | 0.055 U | 0.28 | 0.04 U | 0.04 U | 0.71 | 0.14 | 0.063 U | 0.066 | 0.026 U | 0.35 U | 2.3 | 18 | 0.049 U | 0.026 U | 0.095 U | 0.036 | 0.066 | 0.043 U | 0.17 U | 0.043 U | 0.12 U | 0.39 | 0.088 U |
| 70 | 07/18/12 | ORIG | TO-15 | 0.27 U | 26 | 480 | 0.11 U | 0.11 U | 21 | 0.081 U | 0.081 U | 2.3 | 2.5 | 0.13 U | 0.12 | 0.053 U | 0.69 U | 43 | 220 | 0.13 | 0.051 U | 0.19 U | 0.064 U | 0.075 U | 0.087 U | 0.35 U | 0.087 U | 0.25 U | 0.88 | 0.18 U |
| VMP-67 | | | | | | | | | | | | | | | | | | | | | | | | | | | | | | |
| 6.5 | 07/19/12 | ORIG | TO-15 | 0.27 U | 11 | 350 | 0.11 U | 0.11 U | 0.079 U | 0.081 U | 0.081 U | 2 | 0.48 | 0.13 U | 0.81 | 0.053 U | 0.69 U | 1.1 | 10 | 0.099 U | 0.051 U | 0.19 U | 0.064 U | 0.075 U | 0.087 U | 0.35 U | 0.087 U | 0.25 U | 0.49 U | 0.18 U |
| 12 | 07/19/12 | ORIG | TO-15 | 0.27 U | 8.1 | 310 | 0.11 U | 0.11 U | 0.079 U | 0.081 U | 0.081 U | 2 | 0.45 | 0.13 U | 0.62 | 0.053 U | 0.69 U | 1 | 9.5 | 0.099 U | 0.051 U | 0.19 U | 0.064 U | 0.075 U | 0.087 U | 0.35 U | 0.087 U | 0.25 U | 0.49 U | 0.18 U |
| 24 | 07/19/12 | ORIG | TO-15 | 0.27 U | 3.4 | 270 | 0.11 U | 0.11 U | 0.079 U | 0.081 U | 0.081 U | 2.8 | 0.52 | 0.13 U | 0.44 | 0.053 U | 0.69 U | 1.2 | 11 | 0.099 U | 0.051 U | 0.19 U | 0.064 U | 0.1 | 0.087 U | 0.35 U | 0.087 U | 0.8 | 0.49 U | 0.18 U |
| 40 | 07/19/12 | ORIG | TO-15 | 1.7 U | 10 | 300 | 0.68 U | 0.68 U | 0.5 U | 0.51 U | 0.51 U | 7.7 | 1.2 | 0.79 U | 0.68 | 0.33 U | 4.3 U | 2.5 | 22 | 0.62 U | 0.32 U | 1.2 U | 0.4 U | 0.47 U | 0.54 U | 2.2 U | 0.54 U | 1.6 U | 3.1 U | 1.1 U |
| 50 | 07/19/12 | ORIG | TO-15 | 0.78 U | 0.85 | 44 | 0.31 U | 0.31 U | 0.23 U | 0.23 U | 0.23 U | 1.9 | 0.46 | 0.36 U | 0.28 U | 0.15 U | 2 U | 0.93 | 10 | 0.28 U | 0.15 U | 3.4 | 0.18 U | 0.21 U | 0.25 U | 0.99 U | 0.25 U | 0.71 U | 280 | 0.5 U |
| 60 | 07/19/12 | ORIG | TO-15 | 0.86 U | 5.4 | 95 | 0.34 U | 0.34 U | 0.67 | 0.25 U | 0.25 U | 4.4 | 0.99 | 0.4 U | 0.31 U | 0.17 U | 2.2 U | 4 | 50 | 0.31 U | 0.16 U | 1.2 | 0.2 U | 0.24 U | 0.27 U | 1.1 U | 0.27 U | 0.78 U | 140 | 0.56 U |
| 70 | 07/19/12 | ORIG | TO-15 | 1 U | 0.5 U | 12 | 0.4 U | 0.4 U | 0.29 U | 0.3 U | 0.3 U | 0.54 | 0.53 | 0.46 U | 0.36 U | 0.19 U | 2.5 U | 0.82 U | 4.2 | 0.36 U | 0.19 U | 2.3 | 0.23 U | 0.28 U | 0.32 U | 1.3 U | 0.32 U | 0.91 U | 430 | 0.65 U |
| VMP-68 | | | | | | | | | | | | | | | | | | | | | | | | | | | | | | |
| 6.5 | 07/19/12 | ORIG | TO-15 | 0.034 U | 1 | 0.016 | 0.014 U | 0.014 U | 0.0099 U | 0.01 U | 0.01 U | 0.0099 U | 0.0099 U | 0.016 U | 0.012 U | 0.0066 U | 0.087 U | 0.23 | 1.2 | 0.012 U | 0.0064 U | 0.049 | 0.008 U | 0.021 | 0.011 U | 0.043 U | 0.011 U | 0.058 | 0.19 | 0.022 U |
| 6.5 | 07/19/12 | DUP | TO-15 | 0.017 U | 0.6 | 0.0067 U | 0.0068 U | 0.0068 U | 0.005 U | 0.0051 U | 0.0051 U | 0.005 U | 0.005 U | 0.0079 U | 0.0061 U | 0.0033 U | 0.043 U | 0.13 | 0.68 | 0.0062 U | 0.0032 U | 0.032 | 0.004 U | 0.0091 | 0.0054 U | 0.022 U | 0.0054 U | 0.026 | 0.12 | 0.011 U |
| 12 | 07/19/12 | ORIG | TO-15 | 0.069 U | 1 | 0.027 U | 0.027 U | 0.027 U | 0.02 U | 0.02 U | 0.02 U | 0.02 U | 0.02 U | 0.031 U | 0.024 U | 0.013 U | 0.17 U | 0.2 | 1.3 | 0.025 U | 0.013 U | 0.048 U | 0.016 U | 0.019 U | 0.022 U | 0.087 U | 0.022 U | 0.062 U | 0.16 | 0.044 U |
| 24 | 07/19/12 | ORIG | TO-15 | 0.27 U | 0.32 | 0.11 U | 0.11 U | 0.11 U | 0.079 U | 0.081 U | 0.081 U | 0.079 U | 0.079 U | 0.13 U | 0.098 U | 0.053 U | 0.69 U | 1.8 | 16 | 0.099 U | 0.051 U | 0.19 U | 0.064 U | 0.092 | 0.087 U | 0.35 U | 0.087 U | 0.57 | 0.49 U | 0.18 U |
| 40 | 07/19/12 | ORIG | TO-15 | 0.27 U | 1.6 | 2.2 | 0.11 U | 0.11 U | 0.82 | 0.081 U | 0.081 U | 0.079 U | 0.079 U | 0.13 U | 0.098 U | 0.053 U | 0.69 U | 2.8 | 20 | 0.099 U | 0.051 U | 0.19 U | 0.064 U | 0.075 U | 0.087 U | 0.35 U | 0.087 U | 0.9 | 0.49 U | 0.18 U |
| 40 | 07/19/12 | DUP | TO-15 | 0.27 U | 2.6 | 3.3 | 0.11 U | 0.11 U | 1.1 | 0.081 U | 0.081 U | 0.079 U | 0.079 U | 0.13 U | 0.098 U | 0.053 U | 0.69 U | 3.5 | 25 | 0.099 U | 0.051 U | 0.19 U | 0.064 U | 0.075 U | 0.087 U | 0.35 U | 0.087 U | 0.68 | 0.49 U | 0.18 U |
| 60 | 07/19/12 | SPLIT | TO-15 | 1.4 U | 8 | 11 | 1.1 U | 1.1 U | 5.3 | 0.83 U | 0.83 U | 0.82 U | 0.82 U | 3.2 UJ | 1 U | 0.54 U | 0.72 U | 10 | 96 | 1 U | 0.53 U | 1.2 U | 0.66 U | 0.78 U | 0.89 U | 0.89 U | 0.89 U | 1.6 U | 2.5 U | 1.5 U |
| 60 | 07/19/12 | ORIG | TO-15 | 0.27 U | 6.7 | 9.4 | 0.11 U | 0.11 U | 4 | 0.081 U | 0.081 U | 0.34 | 0.079 U | 0.13 U | 0.098 U | 0.053 U | 0.69 U | 9.1 | 120 | 0.099 U | 0.051 U | 0.19 U | 0.064 U | 0.075 U | 0.087 U | 0.35 U | 0.087 U | 0.31 | 0.49 U | 0.18 U |

# Table 2-3
# Omega Chemical Superfund Site
# Volatile Organic Compounds (VOCs) Analytical Summary
# Vapor Monitoring Probe Analytical Results

| Sample Location / Depth (ft) | Sample Date | Sample Type | Analytical Method | 1,1,2,2-PCA | PCE | TCE | 1,1,1-TCA | 1,1,2-TCA | 1,1-DCE | 1,1-DCA | 1,2-DCA | cis-1,2-DCE | trans-1,2-DCE | CTC | CFM | CET | MC | Freon 11 | Freon 113 | Freon 12 | VC | ACT | BEN | TOL | EBN | MPX | OX | CDS | IPA | MEK |
|---|---|---|---|---|---|---|---|---|---|---|---|---|---|---|---|---|---|---|---|---|---|---|---|---|---|---|---|---|---|---|
| VMP-69 | | | | | | | | | | | | | | | | | | | | | | | | | | | | | | |
| 6 | 07/18/12 | ORIG | TO-15 | 0.0069 U | 0.086 | 0.034 | 0.0027 U | 0.0027 U | 0.0056 | 0.002 U | 0.002 U | 0.0032 | 0.002 U | 0.0031 U | 0.0024 U | 0.0013 U | 0.017 U | 0.096 | 0.73 | 0.0025 U | 0.0013 U | 0.05 | 0.0016 U | 0.0084 | 0.0023 | 0.0088 | 0.0036 | 0.0062 U | 0.14 | 0.012 |
| 12 | 07/18/12 | ORIG | TO-15 | 0.027 U | 0.094 | 0.05 | 0.011 U | 0.011 U | 0.0079 U | 0.0081 U | 0.0081 U | 0.0079 U | 0.0079 U | 0.013 U | 0.0098 U | 0.0053 U | 0.069 U | 0.1 | 0.76 | 0.0099 U | 0.0051 U | 0.2 | 0.0064 U | 0.053 | 0.0087 U | 0.035 U | 0.0087 U | 0.025 U | 1.1 | 0.17 |
| 12 | 07/18/12 | DUP | TO-15 | 0.014 U | 0.25 | 0.0054 U | 0.0055 U | 0.0055 U | 0.004 U | 0.004 U | 0.004 U | 0.004 U | 0.004 U | 0.0063 U | 0.0049 U | 0.0026 U | 0.035 U | 0.091 | 0.52 | 0.0049 U | 0.0026 U | 0.048 | 0.0032 U | 0.013 | 0.0043 U | 0.017 U | 0.0052 | 0.012 U | 0.66 | 0.013 |
| 24 | 07/18/12 | ORIG | TO-15 | 0.069 U | 0.18 | 0.027 U | 0.027 U | 0.027 U | 0.036 | 0.02 U | 0.02 U | 0.02 U | 0.02 U | 0.031 U | 0.024 U | 0.013 U | 0.17 U | 1.3 | 7.6 | 0.025 U | 0.013 U | 0.055 | 0.021 | 0.085 | 0.022 U | 0.087 U | 0.022 U | 0.94 | 1.4 | 0.044 U |
| 40 | 07/18/12 | ORIG | TO-15 | 0.055 U | 0.87 | 0.081 | 0.022 U | 0.022 U | 0.016 U | 0.016 U | 0.016 U | 0.016 U | 0.016 U | 0.025 U | 0.02 U | 0.011 U | 0.14 U | 0.38 | 3.3 | 0.02 U | 0.01 U | 0.33 | 0.013 U | 0.018 | 0.017 U | 0.069 U | 0.017 U | 0.24 | 1.2 | 0.035 U |
| 50 | 07/18/12 | SPLIT | TO-15 | 0.69 U | 0.68 U | 0.54 U | 0.55 U | 0.55 U | 0.47 | 0.41 U | 0.41 U | 0.4 U | 0.4 U | 1.6 UJ | 0.49 U | 0.26 U | 0.35 U | 3.7 | 36 | 0.5 U | 0.26 U | 0.6 U | 0.32 U | 0.38 U | 0.44 U | 0.44 U | 0.44 U | 0.78 U | 3.3 | 0.74 U |
| 50 | 07/18/12 | ORIG | TO-15 | 0.11 U | 0.24 | 0.043 U | 0.044 U | 0.044 U | 0.38 | 0.032 U | 0.032 U | 0.032 U | 0.032 U | 0.05 U | 0.039 U | 0.021 U | 0.28 U | 4.2 | 39 | 0.054 | 0.02 U | 0.076 U | 0.026 U | 0.03 U | 0.035 U | 0.14 U | 0.035 U | 0.1 U | 5.4 | 0.071 U |
| 60 | 07/18/12 | ORIG | TO-15 | 0.0069 U | 0.11 | 0.0087 | 0.0027 U | 0.0027 U | 0.28 | 0.002 U | 0.002 U | 0.002 U | 0.002 U | 0.0031 U | 0.0031 | 0.0013 U | 0.017 U | 4 | 35 | 0.036 | 0.0013 U | 0.041 | 0.01 | 0.044 | 0.011 | 0.035 | 0.012 | 0.1 | 3.2 | 0.0053 |
| VMP-70A | | | | | | | | | | | | | | | | | | | | | | | | | | | | | | |
| 6 | 03/25/13 | ORIG | TO15 | 0.008 U | 0.0062 | 0.0031 U | 0.0032 U | 0.0032 U | 0.0023 U | 0.0023 U | 0.0023 U | 0.0023 U | 0.0023 U | 0.0036 U | 0.0028 U | 0.0015 U | 0.02 U | 0.0065 U | 0.032 | 0.0029 U | 0.0015 U | 0.056 | 0.0019 U | 0.0033 | 0.0025 U | 0.01 U | 0.0025 U | 0.0072 U | 0.014 U | 0.0051 |
| VMP-70B | | | | | | | | | | | | | | | | | | | | | | | | | | | | | | |
| 12 | 03/25/13 | ORIG | TO15 | 0.0085 U | 0.021 | 0.0033 U | 0.0034 U | 0.0034 U | 0.0025 U | 0.0025 U | 0.0025 U | 0.0025 U | 0.0025 U | 0.0039 U | 0.003 U | 0.0016 U | 0.022 U | 0.054 | 0.46 | 0.0034 | 0.0016 U | 0.053 | 0.002 U | 0.0026 | 0.0027 U | 0.011 U | 0.0027 U | 0.0077 U | 0.015 U | 0.0061 |
| 24 | 03/25/13 | ORIG | TO15 | 0.0076 U | 0.0091 | 0.003 U | 0.003 U | 0.003 U | 0.0022 U | 0.0022 U | 0.0022 U | 0.0022 U | 0.0022 U | 0.0035 U | 0.0027 U | 0.0015 U | 0.019 U | 0.037 | 0.31 | 0.0027 U | 0.0014 U | 0.049 | 0.0053 | 0.022 | 0.0058 | 0.013 | 0.0074 | 0.018 | 0.014 U | 0.0049 U |
| 40 | 03/25/13 | ORIG | TO15 | 0.0073 U | 0.0036 U | 0.0028 U | 0.0029 U | 0.0029 U | 0.0021 U | 0.0021 U | 0.0021 U | 0.0021 U | 0.0021 U | 0.0033 U | 0.0026 U | 0.0014 U | 0.018 U | 0.006 U | 0.012 U | 0.0029 | 0.0014 U | 0.032 | 0.0032 | 0.0031 | 0.0023 U | 0.0092 U | 0.0023 U | 0.0066 U | 0.013 U | 0.0047 U |
| VMP-70C | | | | | | | | | | | | | | | | | | | | | | | | | | | | | | |
| 50 | 03/25/13 | ORIG | TO15 | 0.0082 U | 0.0045 | 0.0032 U | 0.0032 U | 0.0032 U | 0.0024 U | 0.0024 U | 0.0024 U | 0.0024 U | 0.0024 U | 0.0037 U | 0.0029 U | 0.0016 U | 0.021 U | 0.024 | 0.42 | 0.0033 | 0.0015 U | 0.049 | 0.014 | 0.074 | 0.031 | 0.06 | 0.048 | 0.069 | 0.015 U | 0.0053 U |
| 60 | 03/25/13 | ORIG | TO15 | 0.014 U | 0.007 | 0.0054 U | 0.0055 U | 0.0055 U | 0.004 U | 0.004 U | 0.004 U | 0.004 U | 0.004 U | 0.0063 U | 0.0049 U | 0.0026 U | 0.035 U | 0.043 | 1.5 | 0.0098 | 0.0026 U | 0.074 | 0.0043 | 0.019 | 0.011 | 0.029 | 0.025 | 0.054 | 0.025 U | 0.0088 U |
| 70 | 03/25/13 | ORIG | TO15 | 0.0078 U | 0.0038 U | 0.003 U | 0.0031 U | 0.0031 U | 0.0022 U | 0.0023 U | 0.0023 U | 0.0022 U | 0.0022 U | 0.0036 U | 0.0028 U | 0.0015 U | 0.02 U | 0.0063 U | 0.013 U | 0.0028 U | 0.0014 U | 0.047 | 0.0018 U | 0.0021 | 0.0025 U | 0.0098 U | 0.0025 U | 0.007 U | 0.014 U | 0.005 U |
| VMP-71 | | | | | | | | | | | | | | | | | | | | | | | | | | | | | | |
| 6 | 07/19/12 | ORIG | TO-15 | 0.017 U | 0.28 | 0.8 | 0.0068 U | 0.0068 U | 0.005 U | 0.0051 U | 0.0051 U | 0.005 U | 0.005 U | 0.0079 U | 0.0061 U | 0.0033 U | 0.043 U | 3.7 | 15 | 0.0062 U | 0.0032 U | 0.014 | 0.0062 | 0.0068 | 0.0054 U | 0.022 U | 0.0054 U | 0.018 | 0.035 | 0.014 |
| 12 | 07/19/12 | ORIG | TO-15 | 0.14 U | 0.11 | 0.27 | 0.055 U | 0.055 U | 0.26 | 0.04 U | 0.04 U | 0.04 U | 0.04 U | 0.063 U | 0.049 U | 0.026 U | 0.35 U | 4.9 | 24 | 0.049 U | 0.026 U | 0.15 | 0.032 U | 0.06 | 0.043 U | 0.17 U | 0.043 U | 0.43 | 1.1 | 0.088 U |
| 24 | 07/19/12 | ORIG | TO-15 | 0.14 U | 0.87 | 0.66 | 0.055 U | 0.055 U | 0.19 | 0.04 U | 0.04 U | 0.04 U | 0.04 U | 0.063 U | 0.049 U | 0.026 U | 0.35 U | 5.5 | 22 | 0.049 U | 0.026 U | 0.095 U | 0.032 U | 0.038 U | 0.043 U | 0.17 U | 0.043 U | 0.23 | 1.9 | 0.088 U |
| 24 | 07/19/12 | DUP | TO-15 | 0.017 U | 0.31 | 0.67 | 0.0068 U | 0.0068 U | 0.24 | 0.0051 U | 0.0051 U | 0.005 U | 0.005 U | 0.0079 U | 0.0061 U | 0.0033 U | 0.043 U | 4.8 | 29 | 0.033 | 0.0032 U | 0.062 | 0.0059 | 0.043 | 0.009 | 0.026 | 0.0094 | 0.08 | 0.65 | 0.011 U |
| 40 | 07/19/12 | SPLIT | TO-15 | 0.74 U | 0.74 U | 0.58 U | 0.59 U | 0.59 U | 1.6 | 0.44 U | 0.44 U | 0.43 U | 0.43 U | 1.7 UJ | 0.53 U | 0.29 U | 0.38 U | 9.9 | 30 | 0.54 U | 0.28 U | 0.64 U | 0.35 U | 0.41 U | 0.47 U | 0.47 U | 0.47 U | 1.1 | 1.3 U | 0.8 U |
| 40 | 07/19/12 | ORIG | TO-15 | 0.69 U | 0.58 | 1.4 | 0.27 U | 0.27 U | 1.6 | 0.2 U | 0.2 U | 0.2 U | 0.2 U | 0.31 U | 0.24 U | 0.13 U | 1.7 U | 13 | 39 | 0.25 U | 0.13 U | 0.64 | 0.16 U | 0.19 U | 0.22 U | 0.87 U | 0.22 U | 1 | 1.2 U | 0.44 U |
| 50 | 07/19/12 | ORIG | TO-15 | 0.27 U | 1.2 | 0.91 | 0.11 U | 0.11 U | 2.9 | 0.081 U | 0.081 U | 0.079 U | 0.079 U | 0.13 U | 0.098 U | 0.053 U | 0.69 U | 21 | 130 | 0.11 | 0.051 U | 0.19 U | 0.064 U | 0.075 U | 0.087 U | 0.35 U | 0.087 U | 0.3 | 0.49 U | 0.18 U |
| VMP-72 | | | | | | | | | | | | | | | | | | | | | | | | | | | | | | |
| 6 | 07/19/12 | ORIG | TO-15 | 0.017 U | 0.028 | 0.022 | 0.0068 U | 0.0068 U | 0.005 U | 0.0051 U | 0.0051 U | 0.005 U | 0.005 U | 0.0079 U | 0.0061 U | 0.0033 U | 0.043 U | 0.23 | 1 | 0.0062 U | 0.0032 U | 0.012 U | 0.004 U | 0.0047 U | 0.0054 U | 0.022 U | 0.0054 U | 0.016 U | 8.4 | 0.011 U |
| 12 | 07/19/12 | ORIG | TO-15 | 0.14 U | 0.068 U | 0.054 U | 0.055 U | 0.055 U | 0.04 U | 0.04 U | 0.04 U | 0.04 U | 0.04 U | 0.063 U | 0.049 U | 0.026 U | 0.35 U | 0.19 | 0.85 | 0.049 U | 0.026 U | 0.095 U | 0.032 U | 0.038 U | 0.043 U | 0.17 U | 0.043 U | 0.12 U | 250 | 0.088 U |
| 24 | 07/19/12 | ORIG | TO-15 | 0.14 U | 0.12 | 0.054 U | 0.055 U | 0.055 U | 0.51 | 0.04 U | 0.04 U | 0.04 U | 0.04 U | 0.063 U | 0.049 U | 0.026 U | 0.35 U | 3.5 | 14 | 0.049 U | 0.026 U | 0.095 U | 0.032 U | 0.084 | 0.043 U | 0.17 U | 0.043 U | 0.12 U | 0.25 U | 0.088 U |
| 40 | 07/19/12 | ORIG | TO-15 | 0.27 U | 0.14 U | 0.11 U | 0.11 U | 0.11 U | 0.079 U | 0.081 U | 0.081 U | 0.079 U | 0.079 U | 0.13 U | 0.098 U | 0.053 U | 0.69 U | 0.23 | 1.1 | 0.099 U | 0.051 U | 0.78 | 0.064 U | 0.075 U | 0.087 U | 0.35 U | 0.087 U | 0.25 U | 960 | 0.18 U |
| 50 | 07/19/12 | ORIG | TO-15 | 0.017 U | 0.24 | 0.12 | 0.0068 U | 0.0068 U | 0.78 | 0.0051 U | 0.0051 U | 0.005 U | 0.005 U | 0.0079 U | 0.0061 U | 0.0033 U | 0.043 U | 6.5 | 28 | 0.0062 U | 0.0032 U | 0.012 U | 0.04 | 0.079 | 0.01 | 0.023 | 0.0087 | 0.016 U | 0.031 U | 0.011 U |
| 60 | 07/19/12 | ORIG | TO-15 | 0.017 U | 0.23 | 0.21 | 0.0068 U | 0.0068 U | 0.71 | 0.0051 U | 0.0051 U | 0.005 U | 0.005 U | 0.0079 U | 0.012 | 0.0033 U | 0.043 U | 6.6 | 27 | 0.024 | 0.0032 U | 0.012 U | 0.041 | 0.072 | 0.011 | 0.029 | 0.01 | 0.29 | 0.097 | 0.022 |
| 70 | 07/19/12 | ORIG | TO-15 | 0.017 U | 0.18 | 0.24 | 0.0068 U | 0.0068 U | 0.49 | 0.0051 U | 0.0051 U | 0.005 U | 0.0051 | 0.0079 U | 0.014 | 0.0033 U | 0.043 U | 2.6 | 9 | 0.032 | 0.0032 U | 0.083 | 0.055 | 0.053 | 0.0098 | 0.023 | 0.01 | 1 | 0.14 | 0.012 |
| VMP-73A | | | | | | | | | | | | | | | | | | | | | | | | | | | | | | |
| 6 | 03/25/13 | ORIG | TO15 | 0.007 U | 0.0035 U | 0.0027 U | 0.0028 U | 0.0028 U | 0.002 U | 0.0021 U | 0.0021 U | 0.002 U | 0.002 U | 0.0032 U | 0.0025 U | 0.0013 U | 0.018 U | 0.0057 U | 0.083 | 0.003 | 0.0013 U | 0.02 | 0.0016 U | 0.0054 | 0.0022 U | 0.0089 U | 0.0027 | 0.0064 U | 0.013 U | 0.0045 U |
| VMP-73B | | | | | | | | | | | | | | | | | | | | | | | | | | | | | | |
| 12 | 03/25/13 | ORIG | TO15 | 0.012 U | 0.0058 U | 0.0046 U | 0.0047 U | 0.0047 U | 0.0034 U | 0.0035 U | 0.0035 U | 0.0034 U | 0.0034 U | 0.0054 U | 0.0042 U | 0.0023 U | 0.03 U | 0.0097 U | 0.11 | 0.0043 U | 0.0022 U | 0.026 | 0.0027 U | 0.0035 | 0.0037 U | 0.015 U | 0.0037 U | 0.014 | 0.021 U | 0.0076 U |
| 24 | 03/25/13 | ORIG | TO15 | 0.0073 U | 0.0045 | 0.0029 U | 0.0029 U | 0.0029 U | 0.0021 U | 0.0022 U | 0.0022 U | 0.0021 U | 0.0021 U | 0.0034 U | 0.0026 U | 0.0014 U | 0.019 U | 0.006 U | 0.09 | 0.0026 U | 0.0014 U | 0.031 | 0.0085 | 0.1 | 0.0098 | 0.025 | 0.0093 | 0.14 | 0.013 U | 0.0077 |
| 40 | 03/25/13 | ORIG | TO15 | 0.014 U | 0.0068 U | 0.0054 U | 0.0055 U | 0.0055 U | 0.004 U | 0.004 U | 0.004 U | 0.004 U | 0.004 U | 0.0063 U | 0.0049 U | 0.0026 U | 0.035 U | 0.011 U | 0.045 | 0.0049 U | 0.0026 U | 0.13 | 0.021 | 0.13 | 0.013 | 0.032 | 0.01 | 0.32 | 0.025 U | 0.0088 U |
| VMP-73C | | | | | | | | | | | | | | | | | | | | | | | | | | | | | | |
| 50 | 03/25/13 | ORIG | TO15 | 0.014 U | 0.019 | 0.0054 U | 0.0055 U | 0.0055 U | 0.004 U | 0.004 U | 0.004 U | 0.004 U | 0.004 U | 0.0063 U | 0.0049 U | 0.0026 U | 0.035 U | 0.029 | 1.7 | 0.0059 | 0.0026 U | 0.031 | 0.013 | 0.098 | 0.0091 | 0.025 | 0.0086 | 0.36 | 0.025 U | 0.0098 |
| 60 | 03/25/13 | ORIG | TO15 | 0.027 U | 0.026 | 0.011 U | 0.011 U | 0.011 U | 0.0079 U | 0.0081 U | 0.0081 U | 0.0079 U | 0.0079 U | 0.013 U | 0.0098 U | 0.0053 U | 0.069 U | 0.032 | 3 | 0.0099 U | 0.0051 U | 0.14 | 0.0064 U | 0.032 | 0.0087 U | 0.035 U | 0.0087 U | 0.098 | 0.049 U | 0.018 U |
| 70 | 03/25/13 | ORIG | TO15 | 0.0069 U | 0.0034 U | 0.0027 U | 0.0027 U | 0.0027 U | 0.002 U | 0.002 U | 0.002 U | 0.002 U | 0.002 U | 0.0031 U | 0.0024 U | 0.0013 U | 0.017 U | 0.0056 U | 0.011 U | 0.0027 | 0.0013 U | 0.039 | 0.0016 U | 0.004 | 0.0022 U | 0.0087 U | 0.0022 U | 0.0062 U | 0.012 U | 0.0044 U |
| VMP-74A | | | | | | | | | | | | | | | | | | | | | | | | | | | | | | |
| 6 | 03/25/13 | ORIG | TO15 | 0.034 U | 0.044 | 0.013 U | 0.014 U | 0.014 U | 0.0099 U | 0.01 U | 0.01 U | 0.0099 U | 0.0099 U | 0.016 U | 0.012 U | 0.0066 U | 0.087 U | 0.44 | 6.1 | 0.015 | 0.0064 U | 0.024 U | 0.008 U | 0.0094 U | 0.011 U | 0.043 U | 0.011 U | 0.031 U | 0.061 U | 0.022 U |
| VMP-74B | | | | | | | | | | | | | | | | | | | | | | | | | | | | | | |
| 12 | 03/25/13 | ORIG | TO15 | 0.14 U | 0.072 | 0.054 U | 0.055 U | 0.055 U | 0.04 U | 0.04 U | 0.04 U | 0.04 U | 0.04 U | 0.063 U | 0.049 U | 0.026 U | 0.35 U | 0.11 U | 8.5 | 0.049 U | 0.026 U | 0.095 U | 0.032 U | 0.038 U | 0.043 U | 0.17 U | 0.043 U | 0.12 U | 0.25 U | 0.088 U |
| 24 | 03/25/13 | ORIG | TO15 | 0.034 U | 0.29 | 0.013 U | 0.014 U | 0.014 U | 0.0099 U | 0.01 U | 0.01 U | 0.0099 U | 0.0099 U | 0.016 U | 0.012 U | 0.0066 U | 0.087 U | 1.9 | 30 | 0.07 | 0.0064 U | 0.064 | 0.0091 | 0.071 | 0.012 | 0.043 U | 0.017 | 0.031 U | 0.061 U | 0.022 U |
| 40 | 03/25/13 | ORIG | TO15 | 0.17 U | 0.25 | 0.067 U | 0.068 U | 0.068 U | 0.05 U | 0.051 U | 0.051 U | 0.05 U | 0.05 U | 0.079 U | 0.061 U | 0.033 U | 0.43 U | 1.8 | 43 | 0.062 U | 0.032 U | 0.12 U | 0.04 U | 0.18 | 0.054 U | 0.22 U | 0.063 | 0.16 U | 0.31 U | 0.11 U |
| VMP-74C | | | | | | | | | | | | | | | | | | | | | | | | | | | | | | |
| 50 | 03/25/13 | ORIG | TO15 | 0.14 U | 1.2 | 0.054 U | 0.055 U | 0.055 U | 0.17 | 0.04 U | 0.04 U | 0.04 U | 0.04 U | 0.063 U | 0.049 U | 0.026 U | 0.35 U | 5.3 | 64 | 0.2 | 0.026 U | 0.095 U | 0.032 U | 0.038 U | 0.043 U | 0.17 U | 0.043 U | 0.12 U | 0.25 U | 0.088 U |
| 60 | 03/25/13 | ORIG | TO15 | 0.14 U | 0.25 | 0.054 U | 0.055 U | 0.055 U | 0.051 | 0.04 U | 0.04 U | 0.04 U | 0.04 U | 0.063 U | 0.049 U | 0.026 U | 0.35 U | 1.9 | 36 | 0.07 | 0.026 U | 0.14 | 0.032 U | 0.038 U | 0.043 U | 0.17 U | 0.043 U | 0.12 U | 0.25 U | 0.088 U |
| 70 | 03/25/13 | ORIG | TO15 | 0.011 U | 0.014 | 0.0043 U | 0.0044 U | 0.0044 U | 0.0032 U | 0.0032 U | 0.0032 U | 0.0032 U | 0.0032 U | 0.005 U | 0.0039 U | 0.0021 U | 0.028 U | 0.032 | 0.52 | 0.0041 | 0.002 U | 0.05 | 0.003 | 0.011 | 0.0035 U | 0.014 U | 0.0035 U | 0.01 U | 0.02 U | 0.012 |
| VMP-75A | | | | | | | | | | | | | | | | | | | | | | | | | | | | | | |
| 6 | 03/25/13 | ORIG | TO15 | 0.0071 U | 0.015 | 0.0028 U | 0.0028 U | 0.0028 U | 0.002 U | 0.0021 U | 0.0021 U | 0.002 U | 0.002 U | 0.0032 U | 0.008 | 0.0014 U | 0.018 U | 0.084 | 0.38 | 0.0027 | 0.0013 U | 0.024 | 0.0023 | 0.0067 | 0.0022 U | 0.0089 U | 0.0035 | 0.0064 U | 0.013 U | 0.0046 U |
| VMP-75B | | | | | | | | | | | | | | | | | | | | | | | | | | | | | | |
| 12 | 03/25/13 | ORIG | TO15 | 0.011 U | 0.0054 U | 0.0043 U | 0.0044 U | 0.0044 U | 0.0032 U | 0.0032 U | 0.0032 U | 0.0032 U | 0.0032 U | 0.005 U | 0.0057 | 0.0021 U | 0.028 U | 0.081 | 0.32 | 0.004 U | 0.002 U | 0.056 | 0.0087 | 0.086 | 0.01 | 0.031 | 0.0099 | 0.27 | 0.02 U | 0.0071 U |
| 24 | 03/25/13 | ORIG | TO15 | 0.034 U | 0.017 U | 0.013 U | 0.014 U | 0.014 U | 0.0099 U | 0.01 U | 0.01 U | 0.0099 U | 0.0099 U | 0.016 U | 0.021 | 0.0066 U | 0.087 U | 0.18 | 0.83 | 0.012 U | 0.0064 U | 0.059 | 0.017 | 0.14 | 0.014 | 0.047 | 0.015 | 0.32 | 0.061 U | 0.022 U |
| 40 | 03/25/13 | ORIG | TO15 | 0.055 U | 0.027 U | 0.021 U | 0.022 U | 0.022 U | 0.016 U | 0.016 U | 0.016 U | 0.016 U | 0.016 U | 0.025 U | 0.089 | 0.011 U | 0.14 U | 0.42 | 2.5 | 0.02 U | 0.01 U | 0.038 U | 0.013 U | 0.05 | 0.017 U | 0.069 U | 0.017 U | 0.14 | 0.098 U | 0.035 U |
| 40 | 03/25/13 | DUP | TO15 | 0.069 U | 0.034 U | 0.027 U | 0.027 U | 0.027 U | 0.02 U | 0.02 U | 0.02 U | 0.02 U | 0.02 U | 0.031 U | 0.11 | 0.013 U | 0.17 U | 0.52 | 3 | 0.025 U | 0.013 U | 0.062 | 0.016 U | 0.062 | 0.022 U | 0.087 U | 0.022 U | 0.18 | 0.12 U | 0.044 U |
| VMP-75C | | | | | | | | | | | | | | | | | | | | | | | | | | | | | | |
| 50 | 03/25/13 | ORIG | TO15 | 0.034 U | 0.017 U | 0.013 U | 0.014 U | 0.014 U | 0.0099 U | 0.01 U | 0.01 U | 0.0099 U | 0.0099 U | 0.016 U | 0.039 | 0.0066 U | 0.087 U | 0.42 | 2 | 0.012 U | 0.0064 U | 0.063 | 0.008 U | 0.0094 U | 0.011 U | 0.043 U | 0.011 U | 0.031 U | 0.061 U | 0.022 U |
| 60 | 03/25/13 | ORIG | TO15 | 0.11 U | 0.082 | 0.043 U | 0.044 U | 0.044 U | 0.032 U | 0.032 U | 0.032 U | 0.032 U | 0.032 U | 0.05 U | 0.22 | 0.021 U | 0.28 U | 2.8 | 12 | 0.04 U | 0.02 U | 0.076 U | 0.026 U | 0.03 U | 0.035 U | 0.14 U | 0.035 U | 0.1 | 0.2 U | 0.071 U |
| 60 | 03/25/13 | DUP | TO15 | 0.0027 U | 0.039 | 0.0094 | 0.0016 U | 0.0022 U | 0.0032 U | 0.0012 U | 0.0032 U | 0.0016 U | 0.0016 | 0.0017 J | 0.0017 U | 0.004 U | 0.0013 J | 1.1 | 6.1 | 0.016 | 0.001 U | 0.022 | 0.0032 | 0.0024 | 0.011 | 0.015 | 0.0031 | 0.03 | | 0.0026 |

U = Not detected at a concentration greater than the reporting limit shown.
J = Result is less than the RL but greater than or equal to the MDL and the concentration is an approximate value.
Concentrations are reported in milligrams per cubic meter (mg/m3)

Only compounds detected in one or more soil gas samples analyzed by EPA Method 8260 are shown.

ORIG = Original sample
DUP = Duplicate sample
CONF = Confirmation sample - analyzed by fixed-base laboratory

PCA = Tetrachloroethane; PCE = Tetrachloroethene; TCE = Trichloroethene; TCA = Trichloroethane; DCE = Dichloroethene; DCA = Dichloroethane; DCPA = Dichloropropane; CTC = Carbon tetrachloride; CFM = Chloroform; CET = Chloroethane; MC = Methylene chloride; Freon 11 = Trichlorofluoromethane;
Freon 113 = 1,1,2-Trichloro-1,2,2-trifluoroethane; Freon 12 = Dichlorodifluoromethane; VC = Vinyl chloride; ACT = Acetone; BEN = Benzene; TOL = Toluene; MPX = m,p-Xylenes; OX = o-Xylene; CDS = Carbon disulfide; IPA = Isopropanol; MEK = Methyl ethyl ketone (2-butanone).

# Section 3

# Project Description and Preliminary Design

This section presents a discussion of the required remedial action to mitigate contamination of soil and soil gas by SVE and DPE (RAOs #1 and #3). The scope of the proposed project to be performed is introduced with a preliminary design.

## 3.1 Proposed Project Approach

This PDR proposes the installation and operation of a network of shallow and deep vapor extraction and monitoring wells at and adjacent to the former Omega Chemical property and utilization, with upgrades and/or replacements of components within the existing ISVE1 and ISVE2 treatment systems. The treatment systems will include, but are not limited to, extraction blowers, heat exchangers, and vessels filled with vapor-phase granular activated carbon (GAC) to adsorb the VOCs prior to discharge to the atmosphere. As noted in Section 2, a majority of the existing VEWs utilized by the ISVE1 and ISVE2 systems have demonstrated a significant decrease followed by asymptotic trends in influent concentrations. As expected, the significant reductions in mass extraction rates and indoor air concentrations suggest that these wells have made significant progress with regard to meeting RAOs across portions of the Site. However, given the importance of RAO #1 (mitigate vapor intrusion risk), combined with the expectation that VOC vapors will continue to migrate vertically upward into the shallow vadose zone from soil gas within the deep vadose zone, residual saturation, and impacted groundwater, continued operation of the shallow VEWs that exert vacuum influence under buildings is prudent until further progress has been made with regard to source reduction. Because off-gassing from groundwater is likely a contributing source to soil vapor, the addition of DPE wells on the Terra Pave property is intended to provide substantial contaminant mass removal.

As such, this PDR proposes a balance between maintaining shallow SVE in areas where protection of indoor air quality is needed and redirecting remaining capacity from the existing VEWs that are not actively protecting indoor air quality, or where reduced flowrates are expected to maintain protection, to new VEWs, as described in Section 2. This balance requires that the ISVE2 treatment equipment be replaced with a new larger system. Furthermore, the addition of deep VEWs will serve to limit the lateral spread of VOCs in soil gas, and serve to mitigate upward VOC migration from groundwater volatilization into the shallow vadose zone. This will further limit recontamination of shallow soil gas, thereby further reducing the need for continued shallow SVE in some areas and allowing for eventual scaling down and/or discontinuation of shallow SVE.

This PDR proposes that the full-scale SVE components be operated in the following manner:

- All new VEWs will be connected to existing ISVE1 or ISVE2 manifold piping.
- Once the wells are connected, flow from the current VEWs will be rebalanced, with some capacity diverted to new wells as planned, and the full-scale system performance will be assessed within the context of the RAOs.
- The full-scale system will be optimized as needed to meet the RAOs based on performance monitoring data. Optimization is expected to include one or more of the following components:

rebalancing flows; adding extraction wells; adding existing vapor extraction and treatment capacity; and adjusting the performance monitoring program, depending on the need.

- System performance monitoring is described in more detail in this section and in the PMP.
- Extracted vapors will be routed to the same treatment plant locations as exist currently. These two expanded systems are therefore hereafter referred to as SVE1 and SVE2, as they are no longer serving as interim systems.

Given the current expectation that access will be secured to the Terra Pave property and the technical concerns that would arise should access to that property not be possible, this revised PDR only retains one conveyance design option from the first PDR draft. Also, it is expected that long-term access will be secured to the Rippy property where the ISVE2 system currently resides, so previous discussions regarding shifting all extraction and treatment capacity to SVE1 in the near future are no longer relevant. However, the design still includes sufficient spare piping to bring extracted vapors from SVE2 wells west of Putnam back to SVE1, or vice versa, should further evaluations determine that it is more cost effective to operate one system only. Further details on the conveyance are presented in the following sections.

In addition to the expansion of the ISVE systems, this PDR also includes concurrent installation and operation of a DPE system, to be collocated with the deep SVE wells on the Terra Pave property. The DPE system is intended to accomplish the following objectives, both of which align with RAO #3:

- Lower groundwater levels in the vicinity of the deep SVE wells, to allow greater vapor flow and therefore greater mass removal rates, thus accelerating remediation in the Omega source area; and
- Provide additional aqueous phase mass removal immediately downgradient of the Omega source area on the Terra Pave property.

Property access issues are further described in Section 5. The project Design Basis and Process Calculations are provided as Appendix A. The preliminary Design Drawings are provided within Appendix B.

## 3.2 Design Basis

As described in Section 2, the basis of the design was determined by identifying the area requiring treatment to meet the remedial objectives. The proposed system will address both the shallow (above the 30-foot unit) and deep vadose (below 35 feet bgs) zones, in addition to providing benefit in the capillary fringe and groundwater table on the Omega and Terra Pave properties.

Detailed calculations are presented in Appendix A and used as part of the basis of design. The design basis consisting of required vacuums, flows, radii of influence (ROIs), and the estimated soil vapor VOC concentrations expected at each well and at the system influent are presented below.

### 3.2.1 Estimated Flows, Vacuums, and Radii of Influence

The primary design objective for the SVE components is to assert sufficient vacuum at each extraction well such that the ROIs would provide capture in the areas identified in Section 2, as well as remove contaminant mass from the vadose zone to satisfy the other RAOs. Sufficient ROI has been typically defined as extending over all areas where vacuum is greater than or equal to 0.1 inches of water

column (U.S. Army Corps of Engineers 2002 and CDM Smith 2010a). Based on performance monitoring, if additional extraction and treatment capacity is needed to achieve RAOs, it will be added as described in the PMP.

The relationships between asserted vacuum at each extraction well and measured vacuums at nearby vapor monitoring wells (i.e., the size of the ROI) were used as a starting point for this design. The design of shallow vadose zone SVE wells is based on operational data collected from the ISVE1 and ISVE2 systems and the associated VMP network, as of March 31, 2013 (de maximis 2013). The design for the deep SVE wells is based on the DPE pilot test conducted in 2011 (CDM Smith 2011). These estimated operational conditions, which comprise the pneumatic portion of the design basis, are presented in **Table 3-1**. Further information on how these estimates were initially derived can be found in the ISVE1 PDR (CDM Smith 2010a) for shallow wells and the DPE Pilot Test Report (CDM Smith 2011) for deep wells.

For the existing ISVE1 wells, as noted in Section 2.2.1, VE-8S and VE-11S are extracting greater than 90 percent of the total mass. Therefore, these two wells will be maintained at approximately the current flowrates and vacuums. Flowrates from other wells that are protective of indoor air quality (i.e., wells showing ROI under the buildings) will also be maintained. Only those wells that are not expected to provide significant benefit to mitigation of vapor intrusion, or that are expected to maintain that benefit at a lower flowrate, will be altered.

Similarly, for the ISVE2, as noted in Section 2.2.2, existing wells VE-22S and VE-26S are extracting approximately 88 percent of the total mass removed by the ISVE2 system. Several of the other wells remove only small quantities of mass, but still exert vacuum directly underneath buildings. Therefore, the expanded SVE2 manifold will be balanced to allow these wells to continue to extract at approximately the same vacuum and flowrates, with two changes—VE-25S and VE-23S. Flow from VE-25S, which has typically been between 275 and 325 standard cubic feet per minute (scfm), will be reduced. Given that total VOC concentration in this well is less than half of the flow-weighted average of the other wells, while extracting 50 percent more volume than the next highest producing well, it is not expected that this large amount of flow is needed to maintain progress with respect to the RAOs. Instead, the manifold will be configured to extract approximately 150 scfm from this well. VE-23S will also be adjusted to extract less flow, as it is not expected to contribute greatly to further progress with regard to RAO #1, and it is not extracting sufficient mass to demonstrate critical importance with regard to the other RAOs.

For the DPE wells, the amount of vapor and liquid flow from each well is based on the results of the pilot test (CDM Smith 2011). From hydraulic and hydrogeologic perspectives, DPE wells installed as part of this remedy are expected to perform similarly to the DPE wells operated during that pilot test. From a pneumatic and SVE perspective, the DPE wells are expected to perform like the deep VEWs. This is because the wells will be screened over the length of the deep vadose zone, and not just above the water table (i.e., all deep SVE wells, with the exception of VE-2D, on the Terra Pave property will be installed through the capillary fringe to also function as DPE wells). Although this does not allow for focus on the capillary fringe, and may allow for preferential flow through more permeable zones, some degree of preferential flow in this heterogeneous hydrogeologic environment is unavoidable, and this configuration was selected to maximize performance with regard to all the RAOs.

Current and planned flowrates are both listed in **Table 3-1**. Per the approach in the PMP, if it is determined that the flow estimates contained in this PDR are not sufficient to meet RAOs, the design will allow for necessary adjustments (for e.g., flow balancing and/or additional well installations). If it

is determined that additional extraction capacity is needed, it will be added. Existing capacity will be provided preferentially to shallow wells, especially those in the proximity of any buildings, to reduce the risk of indoor air concentrations rebounding.

### 3.2.2 Estimated Influent Concentrations

The influent concentrations for the key COCs at each existing and proposed VEWs were estimated with available analytical data from the specific well (if that specific well already exists and has already been sampled) or surrounding existing wells and VMPs (if the planned VEW does not yet exist). The data source for each vapor extraction well is summarized in **Table 3-2**.

Based on the estimated flow rate and COC concentrations from each extraction well, a flow-weighted average of the influent concentrations from each proposed extraction well was then used to estimate the influent VOC concentrations for the overall system. **Table 3-3** presents the average VOC concentrations estimated for the system influent. Estimates for each well are presented in Appendix A. It should be noted that these estimates are only preliminary, due to the absence of actual pilot test data for some wells. System operational and monitoring data following startup will be used to modify these estimates of extracted VOC mass.

For each compound, the highest concentration estimated to be present in any of the extraction wells in either system was compared to the lower explosive limit (LEL) for that compound. None of the compounds were present at a concentration above 10 percent of the LEL. 1,1-dichloroethene (1,1-DCE) was the closest, as its highest detection at the Site was 0.1 and 0.4 percent of its LEL, at SVE1 and SVE2, respectively. Even in an upset condition, it is not expected that the 1,1-DCE concentrations present would lead to flammability, as the concentrations would have to increase more than two orders of magnitude to be flammable. The LEL fractions for all major compounds were summed, and the result was 0.4 and 0.6 percent for SVE1 and SVE2, respectively. These calculations are presented in Appendix A. Therefore, it is not expected that this process vapor will be flammable. It is also noted that the same conclusion was reached regarding ISVE1 during design.

## 3.3 SVE System Components

This section presents the conceptual design of all the major components of the SVE system.

### 3.3.1 Extraction Wells and Monitoring Probes

In addition to the existing deep extraction well VE-2D installed as part of the DPE pilot test, the conceptual SVE design includes the installation of six new deep VEWs (total of seven operating) and 10 new shallow VEWs, as listed in **Table 3-1**. Additionally, five new DPE wells will also be installed in the same manner as the deep VEWs to extract vapor and liquids separately, as further discussed in Section 3.4. The well locations have been selected based on subsurface vapor concentrations, proximity to the Omega source area, and the estimated achievable ROIs for each well. **Figure 3-1** shows the shallow zone ROIs for the proposed shallow wells, whereas **Figure 3-2** shows the estimated ROIs for all shallow zone wells (new and existing). **Figure 3-3** shows the deep zone estimated ROIs. The proposed placement of the VEWs and VMPs is also shown on Drawing C-3 in Appendix B.

The new shallow VEWs will be constructed with methodologies similar to those used for installation of the ISVE1 and ISVE2 shallow wells, with screened intervals of 10 to 30 feet bgs. The deep SVE wells will be drilled into the water table to allow future conversion to DPE, if needed. Deep VEWs will be installed using the hollow-stem auger drilling method to an approximate depth of 95 to 100 feet bgs. Continuous soil samples for stratigraphic description purposes will be collected from approximately

5 feet bgs using a split-spoon sampler; these continuous soil samples will be collected in both the unsaturated and saturated zones (for the deep VEWs). The Unified Soil Classification System will be utilized to describe the lithologic samples. In the event gravel is encountered, details regarding the clasts (e.g., igneous, sedimentary, mineralogy, weathering, staining, etc.) will also be noted if this information can be determined.

VEWs will be constructed in a 10-inch diameter boring using 4-inch diameter, Schedule 40 PVC blank casing. Shallow VEWs will have approximately 20 feet of 20-slot, PVC screen. Deep VEWs will have approximately 60 feet of 20-slot, Type 304 stainless steel wire-wrap screen. The boring below the bottom of the screen will be backfilled with bentonite chips. A #2/12 filter media will be placed from the bottom of the annulus to approximately 5 feet above the top of the screen. Approximately 5 feet of bentonite chips will be placed in the annulus above the top of the filter media, and the remainder of the annulus will be filled with neat cement with 5 percent bentonite added. The bentonite chips will be hydrated with potable water prior to placing the neat cement. The well will be completed at the surface with a flush-grade, traffic rated well box.

Following installation, deep VEWs will be developed by bailing, swabbing, and pumping.

During construction:

- Each shallow and deep wellhead will be housed in a 12-inch pre-cast well box with H-20 traffic-rated lid.
- Each 4-inch diameter PVC Schedule 40 riser will be connected to an underground PVC Schedule 40 lateral below the well head.
- The top of casing for each well will be sealed with a well plug and can be accessed from the well box.
- Each casing plug will be fitted with a 1/4-inch diameter ball valve.

Further information on the VEW wellhead is shown in Drawing C-4 in Appendix B.

In addition, existing and new VMPs will be used to measure the effectiveness of the vapor extraction in the subsurface zones. New VMPs will be completed with methodologies similar to those used for the existing VMPs constructed to date at the Site, as described previously in Section 2. The key specifications include the following:

- Each probe will consist of a 1/2-inch diameter by 6-inch long stainless steel screen, which will be connected to 1/4-inch diameter Teflon tubing, extending to the surface.
- The top of each probe will be housed in a 6-inch pre-cast well box with H-20 traffic rated lid.

**Table 3-4** lists all proposed VMPs.

### 3.3.2 Conveyance Piping

Piping will be installed to connect the new extraction wells to the treatment systems. The piping will be sized to minimize pressure drops between the extraction well and the system. The piping from each well will be connected as shown in the Design Drawings in Appendix B. Each pipe will connect to only one well and then will extend to an influent manifold at one of the two treatment plants. The

piping will be configured in this manner to maximize control over individual wells, to facilitate balancing of flows between wells at the manifold, and to minimize operational activities at the wellheads. Pressure loss calculations are presented in Appendix A. The conceptual site plan layout is shown in **Figures 3-1 and 3-3** and on Drawing C-3 in Appendix B. Spare piping is proposed to provide additional future conveyance capacity without the need for future trenching or piping installation in the areas where conveyance will be installed. Therefore, spare lines will be terminated at the end of long piping runs and at strategic locations on both sides of Putnam Street. Spare piping termination points are shown on Drawing C-3.

The design includes one 12-inch spare pipe to allow conveyance of extracted vapors from SVE2 VEWs back to SVE1, or SVE1 VEWs back to SVE2, should it be determined in the future that it is feasible and more cost-effective to operate only one system. Design calculations indicate that a 12-inch pipe will be sufficient to convey all deep VEWs planned west of Putnam (as it is expected they will operate for a longer duration than the shallow VEWs), and 10 additional VEWs with an acceptable pressure drop. Up to 2,500 scfm could be carried with a pressure drop of only 1.5 inches of mercury. As such, that 12-inch pipe is expected to be sufficient for all future scenarios where vapors from one treatment plant manifold would be piped to another.

Two of the existing VEWs (VE-8S and VE-11S) will be connected to existing spare piping to provide greater extractive capacity for those wells with no new piping. One of the new VEWs (VE-2D) will be connected to existing spare piping to remove the need to trench again behind the Star City building. Further detail on such connections is shown on Drawing C-3 in Appendix B.

As with ISVE1 and ISVE2, no electrical equipment will be required at the VEWs, and therefore no conduit will be installed as part of the SVE systems.

At the treatment plants, all the conveyance will be connected via an influent manifold. The existing influent manifolds on both systems will be expanded to include flow from the new wells. At the SVE2 treatment plant, the compound slab will be expanded to accommodate the larger manifold. The manifold "arms" for the new wells will be the same as the existing wells, and will include ports for flow measurement for all lines or sampling, throttling valves for all lines, pressure gauges, and a sample port where a portable flowmeter will be used to measure the total influent flow. The new manifold components will be constructed of Schedule 80 PVC and will be arranged in a vertical fashion and mounted to unistrut or equivalent pipe supports.

### 3.3.3 Treatment Equipment

As proven during the initial operation of the ISVE1 and ISVE2 systems, and the operation of similar equipment during the DPE Pilot Test, the existing process equipment is expected to be capable of treating soil vapor from the shallow vadose zone without significant modification. Therefore, given the nature of the soil vapor from the new wells is not expected to differ, the ISVE1 process equipment will be incorporated into the full-scale design and operation. Pressure loss calculations have confirmed that the existing ISVE1 equipment will be able to extract the estimated flows for the existing and new wells at the necessary vacuums to maintain the level of vacuum that is expected to be necessary, as described above.

The ISVE2 equipment will be replaced with equipment that is rated for the higher expected flows, more capable of handling variable flow rates, and better insulated for quiet operation. This will include a new positive displacement blower rated for 2,900 scfm at 12.5 inches of mercury differential pressure. This includes all the wells shown on **Figures 3-1 through 3-3** or listed on **Table 3-1**, with

an additional 300 scfm of spare capacity (i.e., approximately three additional VEWs). The system will also include an air-to-air heat exchanger rated to reduce the temperature to approximately 100 degrees Fahrenheit, depending on ambient conditions. Both the blower and the heat exchanger will be fit with a variable frequency drive (VFD) to facilitate optimization. The existing leased 3,000-pound GAC ISVE2 vessels will be replaced with 5,000-pound vessels to better handle the high VOC concentrations expected at startup. Additional space will be acquired should larger vessels are not compatible with the available space at the current location. GAC media will be the same as has been used during ISVE2 operation. The system will also include all the other components shown on the Piping and Instrumentation Diagram (P&ID), Drawing I-4 in Appendix B.

Once the new VEWs are brought online, the VOC mass extraction rate will increase significantly at least temporarily (see calculated influent estimates in **Table 3-3** and Appendix A). For SVE1, the amount of GAC media required to absorb the contaminants is estimated to be approximately 1,089 pounds per day. For SVE2, the estimate is approximately 1,635 pounds per day. These estimates are based on GAC isotherm modeling performed by GAC vendors, and summarized in **Table 3-3** (see Appendix A for additional detail). As was observed with the first month of operation of both the ISVE1 and ISVE2 systems, initial mass extraction rates are expected to drop exponentially as the first pore volumes within the zone of VEW influence are exchanged and extracted. As such, the GAC usage will decline steadily, and the GAC vessels will require less frequent replacement. Given the highly variable nature of VOC loading observed in operations conducted to date, it is preferred to use vessels that will require frequent changeout initially, but are better suited to utilize GAC efficiently over the bulk of the operational lifetime of the system, compared to a larger vessel that quickly becomes oversized. However, the GAC vessels will be rented to allow for flexibility should vessels of different size be needed. OPOG will also work closely with GAC media vendors to achieve quick turn-around on media replacement during initial operation.

### 3.3.4 Effluent Discharge

The effluent treated vapor will be discharged to atmosphere via the existing stacks at ISVE1 and ISVE2. Further information regarding vapor effluent compliance is discussed in Section 4.4.2.

### 3.3.5 Waste Streams

As noted above, GAC will be used to treat the process vapor. Spent GAC will be removed by the GAC vendor and regenerated off-site, or disposed off-site as hazardous waste (depending on adsorbed VOC concentrations), in compliance with applicable regulations.

The separated condensate, which will likely contain some VOCs, when present, will continue to be removed from the SVE system and either is treated by the groundwater treatment system, or, if needed, disposed off-site in accordance with all applicable regulations.

### 3.3.6 System Control Strategy

The treatment systems will operate under the same simple control strategy as is currently used. The systems have or will have automatic telephone dialers that notify operators in the event of a system shut down. The conditions for system shutdown are listed on the P&IDs in Appendix B, and described in more detail in the respective ISVE1 OM&M Manuals (JHA Environmental Inc. 2011). SVE2 will be configured to operate similarly to ISVE1, as shown on Drawing I-4.

## 3.4 Dual Phase Extraction System Components

This section presents the conceptual design of all the major components of the DPE system.

### 3.4.1 Extraction Wells and Monitoring Wells

As indicated before, five new DPE wells will be installed to extract vapor and groundwater simultaneously. These five wells will be drilled via and constructed using the hollow-stem auger drilling method in the same way as the deep VEWs, as described in Section 3.3.1 and as shown on the civil drawings in Appendix B. However, after installation, the top portion of the well casing will be over excavated, and a well vault will be placed over the top of the well casing. The top of the well casing will be fit with a tee to allow vapor extraction through the tee branch, and a submersible pump will be lowered into the well to allow groundwater extraction separately. With the exception of the additional vapor conveyance, the intent of this design is to include groundwater extraction components that are similar in function and type to the components used within the groundwater extraction wells installed in Putnam Street, as part of the Site's existing Groundwater Treatment System (GWTS). Each pump will operate based on level, and be mechanically throttled to adjust flow, just like existing extraction wells EW-4 and EW-5. Each DPE well vault will also contain a sample port, high level switch, flowmeter, pressure transducer and high pressure switch, and associated isolation and check valves. Further information on the DPE wellhead is shown in Drawing C-5 in Appendix B.

In addition to the DPE wells, one performance monitoring well, OW-12, will be installed as shown on **Figure 3-3**. This monitoring well will be used to assess DPE performance, as described in the PMP. Well OW-12 will be installed to an approximate depth of 90 feet bgs using a hollow-stem auger drill rig, and will be constructed with 4-inch diameter, schedule 40, PVC blank casing and approximately 20 feet of stainless steel wire-wrap screen (0.020-inch slot), similar to the groundwater monitoring wells (e.g., OW-9, OW-10, etc.) previously installed in OU-1.

Following installation, the well will be developed by bailing, swabbing, and pumping until the turbidity of the purged water reaches approximately 5 NTUs or until further development is deemed ineffective. Termination of development will be decided in the field based on professional judgment.

### 3.4.2 Pumps and Conveyance Piping

Piping will be installed to connect the new DPE wells to the GWTS, where the extracted groundwater will be treated, as described below. The proposed submersible pumps and new conveyance piping have been sized to discharge into the existing GWTS conveyance, through the bag filters, and into the air stripper. The pumps will be selected to integrate easily with the existing GWTS electrical system, and the piping will be dual-contained high density polyethylene (HDPE), to match the existing conveyance. The DPE piping will be connected to the existing conveyance immediately upstream of EW-2, as shown on **Figures 3-1** through **3-3**, and Drawings I-5 and C-3 in Appendix B. Pressure loss calculations are presented in Appendix A.

### 3.4.3 Treatment Equipment

The existing GWTS was designed for approximately 60 gallons per minute (gpm) of flow with similar characteristics. Because of hydrogeological limitations, it is not currently pumping more than 15 gpm and the recently renewed GWTS discharge permit allows no more than 30 gpm (see Section 4.3.3.4). It is expected that each DPE well will not produce more than approximately 1.5 gpm, for a total of 7.5 gpm total. Even if each DPE well produced 2.5 gpm, such that the total system flow was 27.5 gpm, that quantity of flow would not be sufficient to exceed the hydraulic limitations of the pumps and

piping included in this design, the treatment capacity of the GWTS components, or the GWTS discharge permit.

### 3.4.4 Effluent Discharge

The effluent treated vapor from air stripping of the groundwater extracted from the DPE wells will be discharged to atmosphere via the existing stacks at the GWTS. Treated water will be discharged via the existing conveyance to the sewer. Further information regarding vapor and water effluent compliance is discussed in Section 4.4.2 and 4.4.3.4, respectively.

### 3.4.5 Waste Streams

As noted above, GAC will be used to treat the process vapor. Spent GAC will be removed by the GAC vendor and regenerated off-site, or disposed off-site as hazardous waste (depending on adsorbed VOC concentrations), in compliance with applicable regulations.

### 3.4.6 System Control Strategy

The GWTS will operate under the same control strategy as is currently used. The new DPE well pumps and associated instrumentation will be configured equivalently to the existing GWTS components, and will operate just like the existing extraction well components.

## 3.5 Performance Monitoring

The performance monitoring of the SVE and DPE system components will include monitoring of the operation of above-ground systems to verify effective treatment of extracted vapors and groundwater, monitoring of below ground conditions to verify performance with regard to the RAOs. Further information and details on performance monitoring is included in the PMP (CDM Smith 2013).

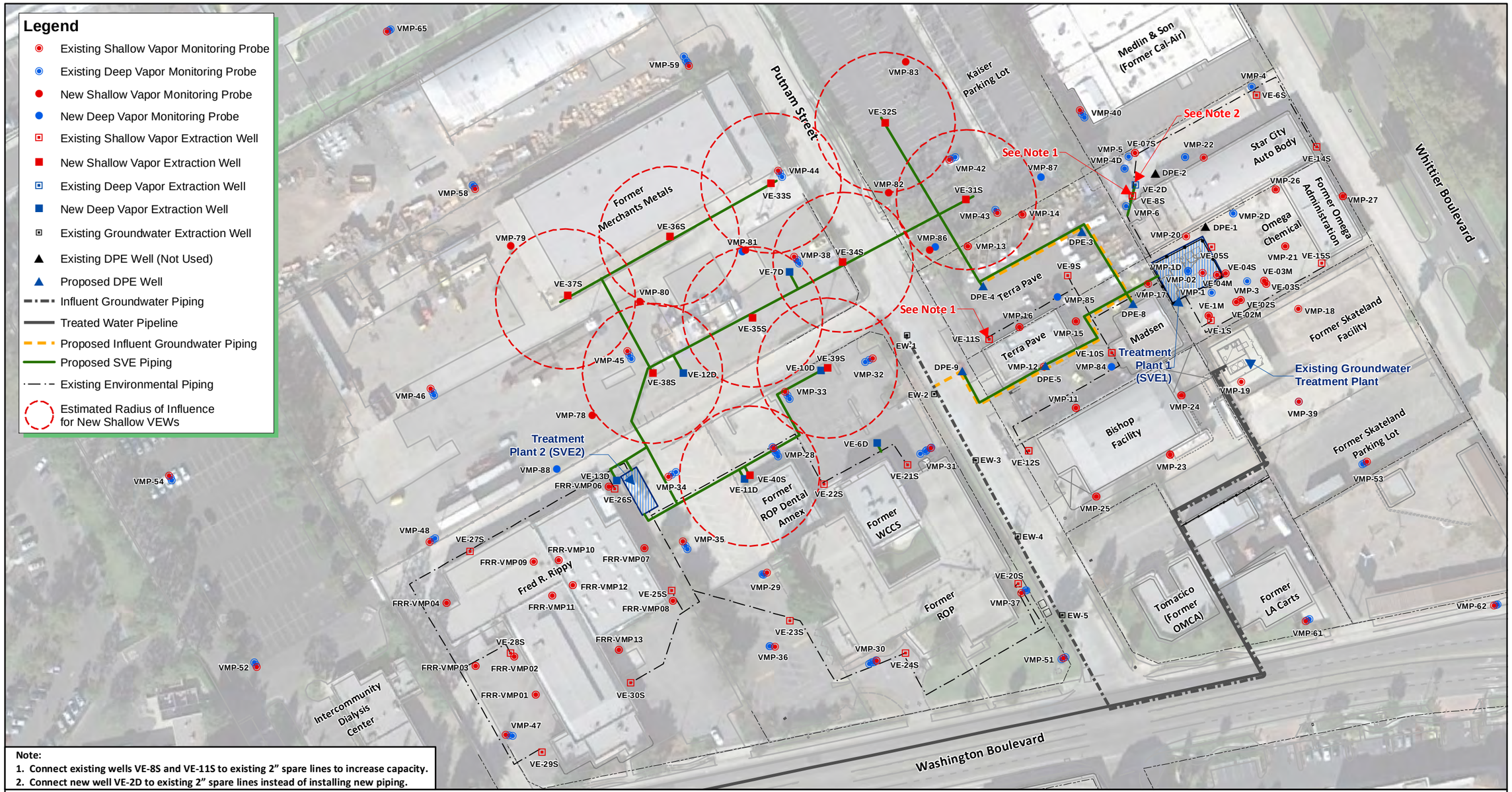


Site Plan with Shallow Zone Estimated ROI
New Wells Only

**Figure 3-1**

# Omega Chemical

CDM Smith

schellerka K:\10500_Omega\2012\90421\RDRA\Figure26_ProposedStepOutLocations.mxd 10/15/2012

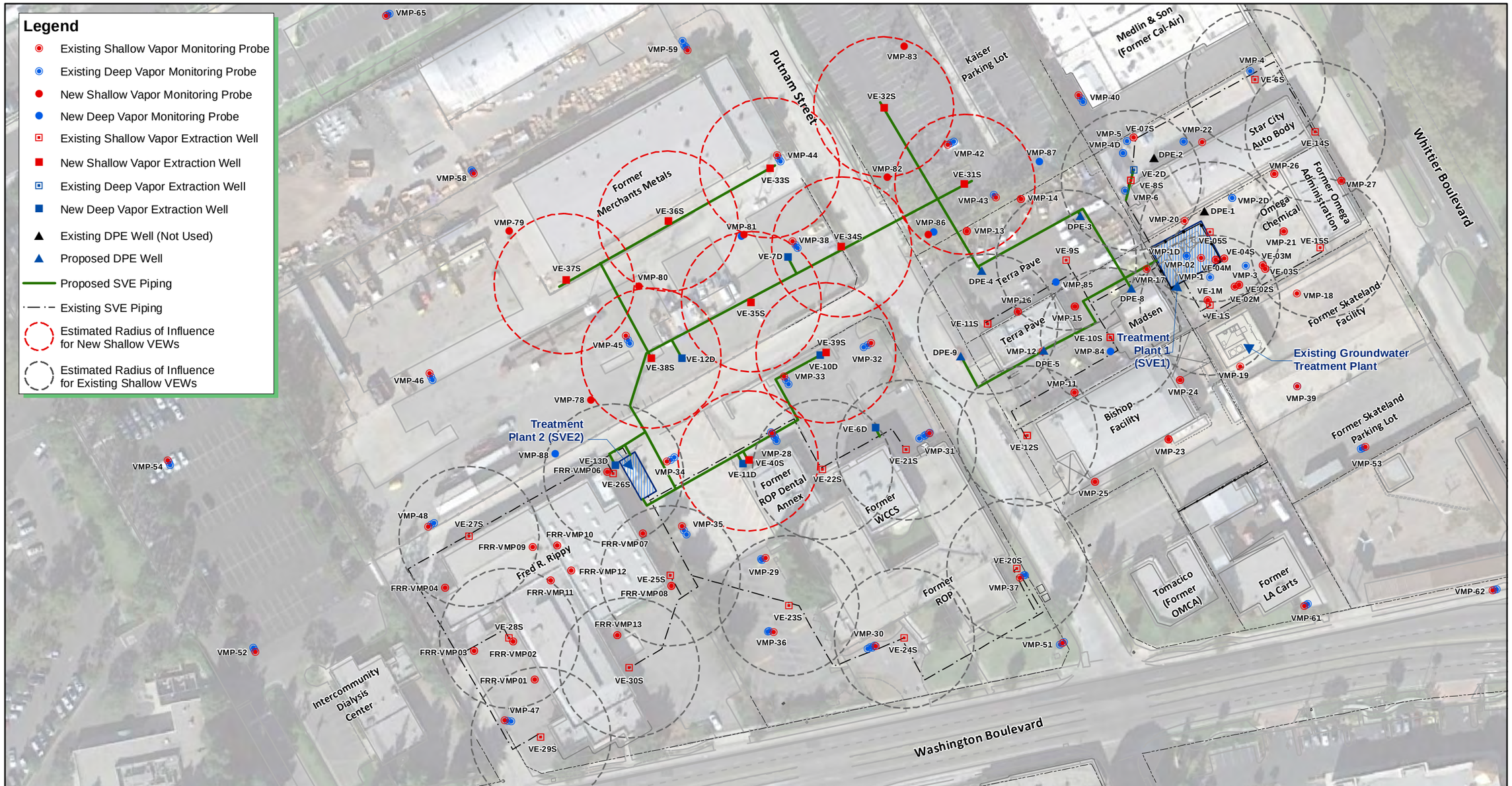


N

50 0 50

Feet

# Omega Chemical

Site Plan with Shallow Zone Estimated ROI
All Wells
**Figure 3-2**

CDM Smith

schellerka K:\10500_Omega\2012\90421\RDRA\Figure26_ProposedStepOutLocations.mxd 10/15/2012

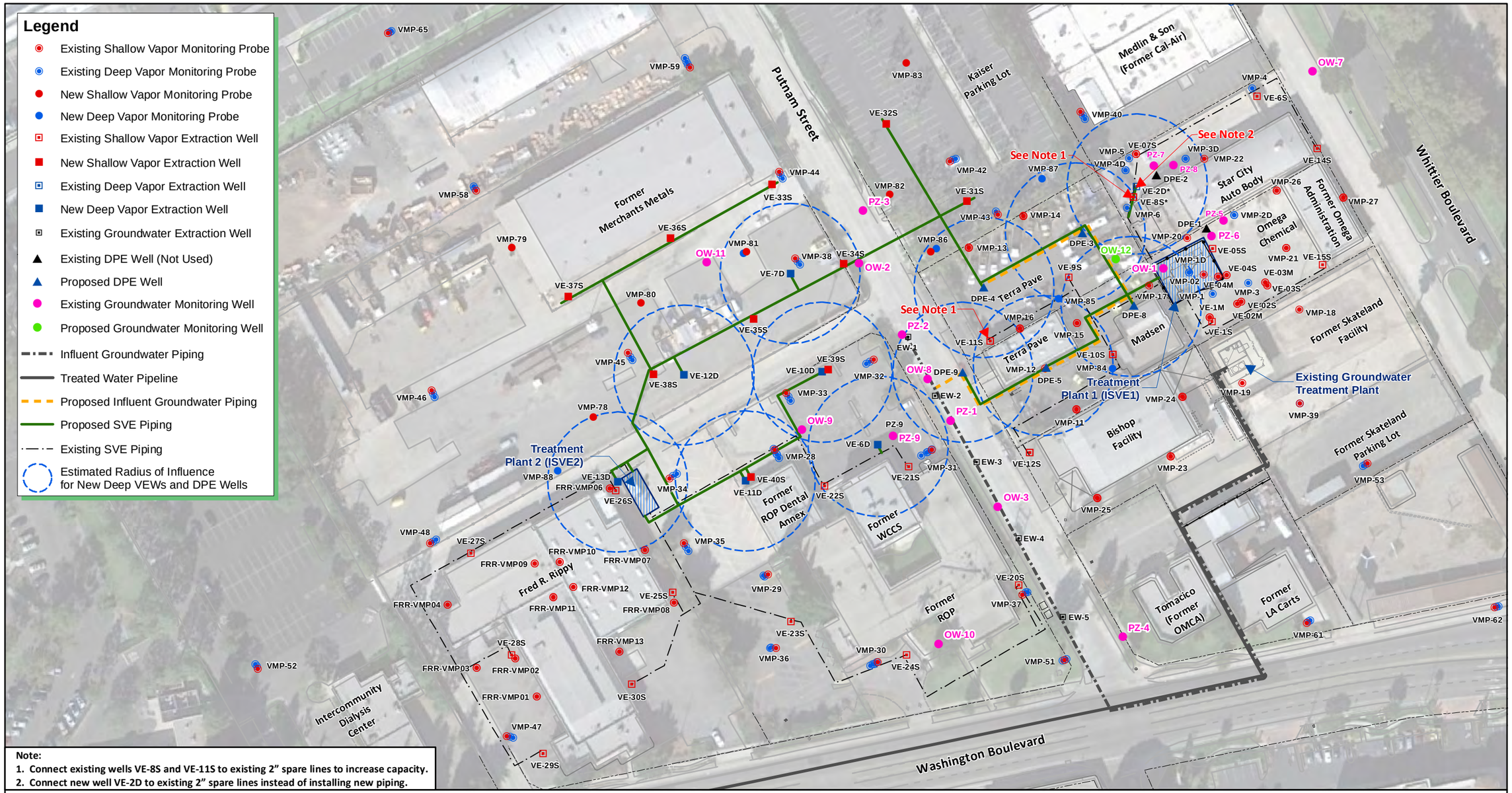


Note:
1. Connect existing wells VE-8S and VE-11S to existing 2" spare lines to increase capacity.
2. Connect new well VE-2D to existing 2" spare lines instead of installing new piping.

Site Plan with Deep Zone Estimated ROI and Groundwater

**Figure 3-3**

# Omega Chemical

CDM Smith

schellerka K:\10500_Omega\2012\90421\RDRA\Figure26_ProposedStepOutLocations.mxd 10/15/2012

**Table 3-1**
**Proposed Extraction Well Schedule (Existing and Proposed)**

| Extraction Well ID | Status | Plant | Diameter (In.) | Total Depth (Feet Bgs) | Current Flow Rate (SCFM) | Anticipated Vapor Flow Rate (SCFM) | Anticipated Groundwater Flow Rate (gpm) | Anticipated Vacuum (in Hg) | Screened Interval (Feet Bgs) | | Coordinates | | Basis of Anticipated Operational Parameters |
|---|---|---|---|---|---|---|---|---|---|---|---|---|---|
| | | | | | | | | | Top | Bottom | Northing | Easting | |
| **ISVE1 Wells** | | | | | | | | | | | | | |
| VE-1S | Existing | 1 | 4 | 23 | 92 | 10 | N/A | <6 *3 | 12.5 | 22.5 | 1811157.14 | 6548381.19 | ISVE1 Operational Data (as of May 2013) |
| VE-5S | Existing | 1 | 4 | 23 | 125 | 125 | N/A | <6 *3 | 12 | 22 | 1811229.21 | 6548380.51 | ISVE1 Operational Data (as of May 2013) |
| VE-6S*1 | Existing | 1 | 4 | 30 | 240 | 100 | N/A | <6 *3 | 10 | 30 | 1811381.18 | 6548426.45 | ISVE1 Operational Data (as of May 2013) |
| VE-8S | Existing | 1 | 4 | 30 | 137 | 150 | N/A | 3 | 10 | 30 | 1811271.82 | 6548300.72 | ISVE1 Operational Data (as of May 2013) |
| VE-9S | Existing | 1 | 4 | 30 | 70 | 10 | N/A | <6 *3 | 10 | 30 | 1811200.74 | 6548238.16 | ISVE1 Operational Data (as of May 2013) |
| VE-10S | Existing | 1 | 4 | 30 | 40 | 40 | N/A | <6 *3 | 10 | 30 | 1811123.89 | 6548282.04 | ISVE1 Operational Data (as of May 2013) |
| VE-11S | Existing | 1 | 4 | 30 | 104 | 90 | N/A | 4 | 10 | 30 | 1811137.65 | 6548159.80 | ISVE1 Operational Data (as of May 2013) |
| VE-12S | Existing | 1 | 4 | 30 | 57 | 30 | N/A | <6 *3 | 10 | 30 | 1811026.18 | 6548199.24 | ISVE1 Operational Data (as of May 2013) |
| VE-14S*2 | Existing | 1 | 4 | 30 | 33 | 35 | N/A | <6 *3 | 10 | 30 | 1811329.61 | 6548486.51 | ISVE1 Operational Data (as of May 2013) |
| VE-15S*2 | Existing | 1 | 4 | 30 | 87 | 90 | N/A | <6 *3 | 10 | 30 | 1811213.08 | 6548491.98 | ISVE1 Operational Data (as of May 2013) |
| **ISVE2 Wells** | | | | | | | | | | | | | |
| VE-20S | Existing | 2 | 4 | 30 | 112 | 100 | N/A | <6 *3 | 10 | 30 | 1810898.21 | 6548176.58 | ISVE2 Operational Data (as of May 2013) |
| VE-21S | Existing | 2 | 4 | 30 | 25 | 30 | N/A | 6 | 10 | 30 | 1811015.60 | 6548083.49 | ISVE2 Operational Data (as of May 2013) |
| VE-22S | Existing | 2 | 4 | 30 | 65 | 65 | N/A | 6 | 10 | 30 | 1810999.44 | 6547993.38 | ISVE2 Operational Data (as of May 2013) |
| VE-23S | Existing | 2 | 4 | 30 | 142 | 50 | N/A | <6 *3 | 10 | 30 | 1810843.36 | 6547968.19 | ISVE2 Operational Data (as of May 2013) |
| VE-24S | Existing | 2 | 4 | 30 | 33 | 25 | N/A | <6 *3 | 10 | 30 | 1810827.21 | 6548076.52 | ISVE2 Operational Data (as of May 2013) |
| VE-25S | Existing | 2 | 4 | 30 | 312 | 150 | N/A | 6 | 10 | 30 | 1810897.67 | 6547837.08 | ISVE2 Operational Data (as of May 2013) |
| VE-26S | Existing | 2 | 4 | 30 | 221 | 220 | N/A | 6 | 10 | 30 | 1810991.40 | 6547783.32 | ISVE2 Operational Data (as of May 2013) |
| VE-27S | Existing | 2 | 4 | 30 | 47 | 50 | N/A | 6 | 10 | 30 | 1810927.08 | 6547640.10 | ISVE2 Operational Data (as of May 2013) |
| VE-28S | Existing | 2 | 4 | 30 | 21 | 25 | N/A | <6 *3 | 10 | 30 | 1810822.71 | 6547684.19 | ISVE2 Operational Data (as of May 2013) |
| VE-29S | Existing | 2 | 4 | 30 | 37 | 35 | N/A | <6 *3 | 10 | 30 | 1810726.10 | 6547716.46 | ISVE2 Operational Data (as of May 2013) |
| VE-30S | Existing | 2 | 4 | 30 | 156 | 150 | N/A | <6 *3 | 10 | 30 | 1810799.60 | 6547800.53 | ISVE2 Operational Data (as of May 2013) |
| **Full-Scale SVE Wells** | | | | | | | | | | | | | |
| VE-31S | New | 2 | 4 | 30.5 | 0 | 110 | N/A | 6 | 10 | 30 | TBD | TBD | ISVE2 Operational Data (as of May 2013) |
| VE-32S | New | 2 | 4 | 30.5 | 0 | 110 | N/A | 6 | 10 | 30 | TBD | TBD | ISVE2 Operational Data (as of May 2013) |
| VE-33S | New | 2 | 4 | 30.5 | 0 | 110 | N/A | 6 | 10 | 30 | TBD | TBD | ISVE2 Operational Data (as of May 2013) |
| VE-34S | New | 2 | 4 | 30.5 | 0 | 110 | N/A | 6 | 10 | 30 | TBD | TBD | ISVE2 Operational Data (as of May 2013) |
| VE-35S | New | 2 | 4 | 30.5 | 0 | 110 | N/A | 6 | 10 | 30 | TBD | TBD | ISVE2 Operational Data (as of May 2013) |
| VE-36S | New | 2 | 4 | 30.5 | 0 | 110 | N/A | 6 | 10 | 30 | TBD | TBD | ISVE2 Operational Data (as of May 2013) |
| VE-37S | New | 2 | 4 | 30.5 | 0 | 110 | N/A | 6 | 10 | 30 | TBD | TBD | ISVE2 Operational Data (as of May 2013) |
| VE-38S | New | 2 | 4 | 30.5 | 0 | 110 | N/A | 6 | 10 | 30 | TBD | TBD | ISVE2 Operational Data (as of May 2013) |
| VE-39S | New | 2 | 4 | 30.5 | 0 | 110 | N/A | 6 | 10 | 30 | TBD | TBD | ISVE2 Operational Data (as of May 2013) |
| VE-40S | New | 2 | 4 | 30.5 | 0 | 110 | N/A | 6 | 10 | 30 | TBD | TBD | ISVE2 Operational Data (as of May 2013) |
| VE-2D | Existing | 1 | 4 | 70.5 | 0 | 100 | N/A | 7 | 35 | 70 | 1811263.48 | 6548403.58 | Pilot Test Data |
| DPE-3 | New | 1 | 6 | 70.5 | 0 | 100 | 1.5 | 7 | 40 | 70 | TBD | TBD | Pilot Test Data |
| DPE-4 | New | 1 | 6 | 70.5 | 0 | 100 | 1.5 | 7 | 40 | 70 | TBD | TBD | Pilot Test Data |
| DPE-5 | New | 1 | 6 | 70.5 | 0 | 100 | 1.5 | 7 | 40 | 70 | TBD | TBD | Pilot Test Data |
| VE-6D | New | 2 | 4 | 70.5 | 0 | 100 | N/A | 7 | 40 | 70 | TBD | TBD | Pilot Test Data |
| VE-7D | New | 2 | 4 | 70.5 | 0 | 100 | N/A | 7 | 40 | 70 | TBD | TBD | Pilot Test Data |
| DPE-8 | New | 1 | 6 | 70.5 | 0 | 100 | 1.5 | 7 | 40 | 70 | TBD | TBD | Pilot Test Data |
| DPE-9 | New | 1 | 6 | 70.5 | 0 | 100 | 1.5 | 7 | 40 | 70 | TBD | TBD | Pilot Test Data |
| VE-10D | New | 2 | 4 | 70.5 | 0 | 100 | N/A | 7 | 40 | 70 | TBD | TBD | Pilot Test Data |
| VE-11D | New | 2 | 4 | 70.5 | 0 | 100 | N/A | 7 | 40 | 70 | TBD | TBD | Pilot Test Data |
| VE-12D | New | 2 | 4 | 70.5 | 0 | 100 | N/A | 7 | 40 | 70 | TBD | TBD | Pilot Test Data |
| VE-13D | New | 2 | 4 | 70.5 | 0 | 100 | N/A | 7 | 40 | 70 | TBD | TBD | Pilot Test Data |
| **Total** | | | | | | 3880 | 7.5 | | | | | | |

**Notes:**

*1 – Well VE-6S was installed as an extraction well during the expanded SVE pilot test, and converted to the ISVE system during ISVE expansion in September and October 2010.

*2 – Wells VE-14S and VE-15S were installed during ISVE expansion in September and October 2010.

*3– Final coordinates for new wells will be determined in the field. Final well construction details (e.g. screened interval, total depth) will be determined onsite by the field geologist.

*4 – Current Flowrates measured on 5/7/13

**Table 3-2**
**Data Source for Vapor-Phase Influent Concentrations Estimate**

| Extraction Well | Data Source |
|---|---|
| **ISVE1 Wells** | |
| VE-1S | ISVE1 System Influent |
| VE-5S | ISVE1 System Influent |
| VE-6S | ISVE1 System Influent |
| VE-8S | ISVE1 System Influent |
| VE-9S | ISVE1 System Influent |
| VE-10S | ISVE1 System Influent |
| VE-11S | ISVE1 System Influent |
| VE-12S | ISVE1 System Influent |
| VE-14S | ISVE1 System Influent |
| VE-15S | ISVE1 System Influent |
| **ISVE2 Wells** | |
| VE-20S | ISVE2 System Influent |
| VE-21S | ISVE2 System Influent |
| VE-22S | ISVE2 System Influent |
| VE-23S | ISVE2 System Influent |
| VE-24S | ISVE2 System Influent |
| VE-25S | ISVE2 System Influent |
| VE-26S | ISVE2 System Influent |
| VE-27S | ISVE2 System Influent |
| VE-28S | ISVE2 System Influent |
| VE-29S | ISVE2 System Influent |
| VE-30S | ISVE2 System Influent |
| **Full-Scale SVE Wells** | |
| VE-31S | VMPs 13, 14, 42A, and 43A |
| VE-32S | VMP 42A |
| VE-33S | VMP 44A |
| VE-34S | VMPs 32A and 38A |
| VE-35S | VMPs 33A, 38A, and 45A |
| VE-36S | VMPs 44A and 45A |
| VE-37S | VMPs 45A and 46A |
| VE-38S | VMPs 34A and 45A |
| VE-39S | VMPs 32A and 33A |
| VE-40S | VMP-28A |
| VE-2D | VE-2D |
| DPE-3 | VMP 43B |
| DPE-4 | VMPs 32B, 32C, and 43B |
| DPE-5 | VMPs 31B and 31C |
| VE-6D | VMPs 31B, 31C, and 28B |
| VE-7D | VMPs 38B, 38C, 44B, 44C, 45B, 45C |
| DPE-8 | VMP-1 |
| DPE-9 | VMPs 31B, 31C, 32B, and 32C |
| VE-10D | VMPs 32B, 32C, 33B, and 33C |
| VE-11D | VMPs 28B, 28C, 29B, 33B, 33C, 34B, 34C, 35B, and 35C |
| VE-12D | VMPs 45B and 45C |
| VE-13D | VMPs 34B, 34C, 35B, and 35C |

**Table 3-3**
**SVE Systems GAC Usage Summary**

| Compound | Controlled? | SVE1 | | SVE2 | |
|---|---|---|---|---|---|
| | | GAC Influent Concentration (ppbv) | Predicted Carbon Usage at Breakthrough (lb/day) | GAC Influent Concentration (ppbv) | Predicted Carbon Usage at Breakthrough (lb/day) |
| Tetrachloroethene | Yes | 58,189 | 236 | 78,851 | 613 |
| Trichloroethene | Yes | 5,371 | 81 | 5,529 | 168 |
| 1,1-Dichloroethene | Yes | 14,320 | 397 | 50,796 | 1,662 |
| Vinyl Chloride | **NO** | 185 | 1,258 | 106 | 2,501 |
| 1,1,1-Trichloroethane | Yes | 775 | 29 | 416 | 42 |
| 1,1-Dichloroethane | Yes | 732 | 126 | 568 | 236 |
| 1,2-Dichloroethane | Yes | 219 | 31 | 144 | 54 |
| Chloroform | Yes | 624 | 118 | 1,580 | 318 |
| Methylene Chloride | **NO** | 869 | 1,255 | 667 | 2,548 |
| Freon 11 (Trichlorofluoromethane) | **NO** | 2,250 | 403 | 11,616 | 1,499 |
| Freon 12 (Dichlorodifluoromethane) | **NO** | 621 | 35,698 | 452 | 78,551 |
| Freon 113 (1,1,2-Trichloro-1,2,2-trifluoroethane) | **NO** | 11,469 | 184 | 75,157 | 1,350 |
| Benzene | Yes | 198 | 17 | 152 | 31 |
| Toluene | Yes | 1,449 | 16 | 1,164 | 28 |
| M/P-Xylene | Yes | 700 | 5 | 536 | 9 |
| O-Xylene | Yes | 651 | 5 | 517 | 8 |
| Carbon Disulfide | **NO** | 396 | 4,323 | 86 | 14,167 |
| Methyl Ethyl Ketone (2-Butanone) | Yes | 92 | 29 | 104 | 19 |
| Total Carbon Usage of Controlled Compounds Only (lb/day) | | | 1,089 | | 3,188 |

**Notes:**

Only controlled compounds are included in the grand total. Compounds that are not expected to adsorb to GAC during operation for substantive compliance with SCAQMD regulations are not included given they will not impact GAC replacement timing.

**Table 3-4**
**Proposed Vapor Monitoring Probe (VMP) Schedule (Existing and Proposed)**

| ID[*1] | Location | Status | Coordinates | | Well Diameter (inch) | Total Drilled or Planned Depth (feet bgs) | Screened Interval (feet bgs) |
|---|---|---|---|---|---|---|---|
| | | | Northing | Easting | | | |
| **ISVE1 VMPs [*5]** | | | | | | | |
| VE-1M | Southwestern area of Former Three Kings Property | Existing | 1811161.49 | 6548378.72 | 4 | 36.5 | 26 - 36 |
| VE-2S | Southwestern area of Former Three Kings Property | Existing | 1811177.04 | 6548410.14 | 4 | 23 | 12 - 22 |
| VE-2M | Southwestern area of Former Three Kings Property | Existing | 1811174.57 | 6548405.79 | 4 | 36.5 | 26 - 36 |
| VE-3S | Southern area of Former Three Kings Property | Existing | 1811191.85 | 6548436.23 | 4 | 23 | 12.5 - 22.5 |
| VE-3M | Southern area of Former Three Kings Property | Existing | 1811196.2 | 6548433.76 | 4 | 36.5 | 26 - 36 |
| VE-4S | Western area of Former Three Kings Property | Existing | 1811203.12 | 6548395.33 | 4 | 22.5 | 12 - 22 |
| VE-4M | Western area of Former Three Kings Property | Existing | 1811200.65 | 6548390.98 | 4 | 36.5 | 26 - 36 |
| VE-5M | Northwestern area of Former Three Kings Property | Existing | 1811226.74 | 6548376.16 | 4 | 36.5 | 26 - 36 |
| VE-6S*[2] | Northeastern area of Star City Property | Existing | 1811381.18 | 6548426.45 | 4 | 30 | 10 -30 |
| VE-7S | Northwestern area of Star City Property | Existing | 1811323.03 | 6548303.59 | 4 | 30 | 10 -30 |
| VMP-1 | Western area of Former Three Kings Property | Existing | 1811184.54 | 6548381.51 | 1 | 45 | 40 - 45 |
| VMP-2 | Western area of Former Three Kings Property | Existing | 1811203.62 | 6548372.47 | 1 | 35 | 33.5 - 35 |
| VMP-3 | Southern area of Former Three Kings Property | Existing | 1811196.56 | 6548416.9 | 1 | 45 | 40 - 45 |
| VMP-4 | Northeastern area of Star City Property | Existing | 1811389.65 | 6548422.26 | 1 | 45 | 40 - 45 |
| VMP-5 | Northwestern area of Star City Property | Existing | 1811319.39 | 6548296.94 | 1 | 45 | 40 - 45 |
| VMP-6 | Western area of Star City Property | Existing | 1811268.95 | 6548296 | 1 | 45 | 40 - 45 |
| VMP-11 | Southwestern area of Terra Pave Property | Existing | 1811069.29 | 6548246.27 | 4 | 30 | 10 -30 |
| VMP-12 | Southwestern area of Terra Pave Property | Existing | 1811110.48 | 6548214.37 | 4 | 30 | 10 -30 |
| VMP-13 | Northwestern area of Terra Pave Property | Existing | 1811230.78 | 6548138.5 | 4 | 30 | 10 -30 |
| VMP-14 | Northeastern area of Terra Pave Property | Existing | 1811262.58 | 6548192.8 | 4 | 30 | 10 -30 |
| VMP-15 | Southeastern area of Terra Pave Property | Existing | 1811155.38 | 6548246.45 | 4 | 30 | 10 -30 |
| VMP-16 | Northwestern area of Terra Pave Property | Existing | 1811150.28 | 6548189.6 | 4 | 30 | 10 -30 |
| VMP-17 | Southeastern area of Terra Pave Property | Existing | 1811192.92 | 6548318.22 | 4 | 30 | 10 -30 |
| VMP-18 | Northern area of Former Skateland Property | Existing | 1811168.73 | 6548468.44 | 4 | 30 | 10 -30 |
| VMP-19 | Western area of Former Skateland Property | Existing | 1811095.76 | 6548411.54 | 4 | 30 | 10 -30 |
| VMP-20 | Northwestern area of Former Three Kings Property | Existing | 1811240.32 | 6548356.24 | 4 | 30 | 10 -30 |
| VMP-21 | Eastern area of Former Three Kings Property | Existing | 1811230.58 | 6548455.21 | 4 | 30 | 10 -30 |
| VMP-22 | Northern area of Star City Property | Existing | 1811319.56 | 6548373.58 | 4 | 30 | 10 -30 |
| VMP-23 | Southeastern area of Bishop Property | Existing | 1811022.57 | 6548340.02 | 4 | 30 | 10 -30 |
| VMP-24 | Eastern area of Bishop Property | Existing | 1811081.89 | 6548351.7 | 4 | 30 | 10 -30 |
| VMP-25 | Southwestern area of Bishop Property | Existing | 1810980.71 | 6548266.81 | 4 | 30 | 10 -30 |
| VMP-26*[3] | Northeastern area of Former Three Kings Property | Existing | 1811287.68 | 6548445.86 | 4 | 30 | 10 -30 |
| VMP-27*[3] | Eastern area of Former Three Kings Property | Existing | 1811281.42 | 6548512.46 | 4 | 30 | 10 -30 |

**Table 3-4 (con't)**
**Proposed Vapor Monitoring Probe (VMP) Schedule (Existing and Proposed)**

| ID[*1] | Location | Status | Coordinates | | Well Diameter (inch) | Total Drilled or Planned Depth (feet bgs) | Screened Interval (feet bgs) |
|---|---|---|---|---|---|---|---|
| | | | Northing | Easting | | | |
| **ISVE2 VMPs [*5]** | | | | | | | |
| FRR-VMP-1 | Southwest area of FRR Building | Existing | 1810782.88 | 6547706.96 | 0.25 | 6, 12 | 6"[*4] |
| FRR-VMP-3 | West area of FRR Building | Existing | 1810811.62 | 6547646.72 | 0.25 | 6, 12 | 6"[*4] |
| FRR-VMP-4 | Northwest area of FRR Building | Existing | 1810874.40 | 6547617.73 | 0.25 | 6, 12 | 6"[*4] |
| FRR-VMP-5 | North area of FRR Building | Existing | 1810958.33 | 6547715.51 | 0.25 | 6, 12 | 6"[*4] |
| FRR-VMP-6 | Northeast area of FRR Building | Existing | 1810990.56 | 6547779.81 | 0.25 | 6, 12 | 6"[*4] |
| FRR-VMP-7 | East area of FRR Building | Existing | 1810929.13 | 6547815.08 | 0.25 | 6, 12 | 6"[*4] |
| FFR-VMP-13 | Southeast area of FRR Building | Existing | 1810827.60 | 6547789.52 | 0.25 | 6, 12 | 6"[*4] |
| VMP-28A | Northern area of ROP Building | Existing | 1811028.899 | 6547944.319 | 0.25 | 6, 12, 24 | 6"[*4] |
| VMP-29A | Western area of ROP Building | Existing | 1810904.612 | 6547937.666 | 0.25 | 6, 12, 24 | 6"[*4] |
| VMP-30A | Southern area of ROP Building | Existing | 1810816.688 | 6548047.430 | 0.25 | 6 | 6"[*4] |
| VMP-31A | Eastern area of ROP Building | Existing | 1811028.949 | 6548101.163 | 0.25 | 6, 12, 24 | 6"[*4] |
| VMP-34A | Northwestern area of ROP Building | Existing | 1811000.550 | 6547839.391 | 0.25 | 6, 12, 24 | 6"[*4] |
| VMP-35A | Eastern area of FRR Building | Existing | 1810935.892 | 6547853.969 | 0.25 | 6, 12, 24 | 6"[*4] |
| **Full-Scale SVE Probes (Existing and Proposed)** | | | | | | | |
| VMP-32 | Northeastern area of ROP Building | Existing | 1811147.53 | 6548052.29 | 0.25 | 6, 12, 24 | 6"[*4] |
| VMP-33 | Northern area of ROP Building | Existing | 1811089.28 | 6547959.21 | 0.25 | 6, 12, 24 | 6"[*4] |
| VMP-36 | Southwestern area of ROP Building | Existing | 1810830.57 | 6547945.69 | 0.25 | 6, 12, 24 | 6"[*4] |
| VMP-37 | Southeastern area of ROP Building | Existing | 1810884.42 | 6548191.7 | 0.25 | 6, 12, 24 | 6"[*4] |
| VMP-47 | Southwestern area of Rippy Building | Existing | 1810739.61 | 6547682.45 | 0.25 | 6, 12, 24 | 6"[*4] |
| VMP-48 | Northwestern area of Merchant Metals Property | Existing | 1810920.17 | 6547560.27 | 0.25 | 6, 12, 24 | 6"[*4] |
| VMP-51 | Southeastern area of ROP Building | Existing | 1810805.44 | 6548252.3 | 0.25 | 6, 12 | 6"[*4] |
| VMP-78 | Southwest corner of Merchant Metals Yard | New | TBD | TBD | 0.25 | 6, 12, 24 | 6"[*4] |
| VMP-79 | West side of Merchant Metals Building | New | TBD | TBD | 0.25 | 6, 12, 24 | 6"[*4] |
| VMP-80 | South side of Merchant Metals Building | New | TBD | TBD | 0.25 | 6, 12, 24 | 6"[*4] |
| VMP-81 | South side of Merchant Metals Building | New | TBD | TBD | 0.25 | 6, 12, 24, 50, 60, 70 | 6"[*4] |
| VMP-82 | Southwest corner of Kaiser Parking Lot | New | TBD | TBD | 0.25 | 6, 12, 24 | 6"[*4] |
| VMP-83 | Middle of Kaiser Parking Lot | New | TBD | TBD | 0.25 | 6, 12, 24 | 6"[*4] |
| VMP-84 | Southeast corner of Terra Pave Lot | New | TBD | TBD | 0.25 | 50, 60, 70 | 6"[*4] |
| VMP-85 | Middle of Terra Pave Lot | New | TBD | TBD | 0.25 | 50, 60, 70 | 6"[*4] |
| VMP-86 | Southwest corner of Kaiser Parking Lot | New | TBD | TBD | 0.25 | 6, 12, 24, 50, 60, 70 | 6"[*4] |
| VMP-87 | Southeast corner of Kaiser Parking Lot | New | TBD | TBD | 0.25 | 50, 60, 70 | 6"[*4] |
| VMP-88 | Southwest corner of Merchant Metals Yard | New | TBD | TBD | 0.25 | 50, 60, 70 | 6"[*4] |

**Notes:**

*1 – Several existing vapor extraction wells (from pilot testing activities) are used as monitoring probes.

*2 – Well VE-6S was converted from vapor monitoring probe to vapor extraction well during ISVE expansion in September 2010.

*3 – Wells VMP-26 and VMP-27 were installed during ISVE expansion in September 2010.

*4 - These VMPs have/will have a 6" port located at the depth indicated in the column to the immediate left.

*5 - VMPs listed here for ISVE1 and ISVE2 are based on current sampling and analysis plans, and are subject to change in the forthcoming Treatment System Performance Evaluation Test Plan.

# Section 4

# Project Implementation

This section discusses the approaches to contracting and constructing the full-scale remedy. These activities will be performed in such a manner to accelerate project implementation.

## 4.1 Design-Build

A modified "Design-Build" (DB) approach has been selected to expedite the construction of the full-scale SVE system. This approach is especially advantageous for this application because only a few additional wells, conveyance, and minimal equipment and treatment system modifications are needed for the existing interim systems to be converted to a full-scale remedy. Therefore, the level of technical difficulty in accomplishing the construction of this remedy will be drastically reduced. Additionally, this modified approach retains the typical benefit of DB, in that the implementation of the Remedial Action can be accelerated by eliminating the Intermediate (60 percent) and Pre-Final (90 percent) design steps. This document, representing the 30 percent design, is an essential step in the process to allow development of a design scope and a cost estimate to complete the pre-construction planning and move immediately into construction. This 30 percent design document, when finalized and approved by USEPA, will be the basis for contracting with a qualified construction contractor. It is assumed that the selected construction contractor, the SVE2 treatment equipment vendor, and/or OPOG's technical representatives will complete any additional design activities that are deemed necessary in order to complete construction within the requirements of this PDR.

A preliminary project schedule is as follows:

- PDR review, revisions, and resubmission to USEPA in July/August 2013
- USEPA approval in August 2013
- Construction contractor selected in September 2013
- Construction Initiation in October 2013
- Construction Completion in January 2014
- Full-scale System Operation in February 2014

This schedule may require revision as construction approaches, given the activities described in Section 4.3 not under direct control of OPOG.

### 4.1.1 Preliminary Design Package

The Preliminary Design package (this PDR, and the drawings in Appendix B) presents the scope and plan for the construction of the system, including vapor extraction wells, conveyance pipelines, and treatment system. This design package will be used to solicit costs for the implementation of the system.

### 4.1.2 Performance Specifications

In lieu of formal specifications, performance specifications will be provided to the SVE2 equipment vendor so that they can submit appropriate material and equipment information and shop drawings for approval prior to commencement of construction.

### 4.1.3 Procurement and Contracting

Under the DB approach, OPOG will obtain a proposal for accomplishing this work from the civil contractor who performed all the trenching and yard piping construction on the first two ISVE systems. This contractor provided the most responsive bid on the ISVE1 system, and performed as expected in construction of the ISVE2 system. The contractor is also uniquely suited to upgrade these two systems, given they are familiar with the exact locations of all buried piping, which will be important in sections of the Site where new piping will have to be installed in proximity to existing conveyance. As long as their proposal is reasonable, OPOG is expecting to sole-source this work.

For the new SVE2 treatment system, OPOG will provide the design requirements, as outlined in this PDR, to qualified equipment vendors and solicit bids. OPOG will then select an equipment manufacturer to provide the new SVE2 equipment and deliver it to the site, where it can be integrated into the remedy by the civil contractor mentioned above. As such, some minor details regarding the SVE2 equipment may change from this preliminary design during the procurement process.

### 4.1.4 Construction

The approach of reusing existing extraction and treatment capacity allows for relatively rapid implementation of the additional full-scale components of the remedy. After final contractual documents are in place, preparations will be made for construction. During this time, a detailed construction schedule will be developed to sequence the work, as required per the SOW. Construction activities can be broken down into the following components.

#### 4.1.4.1 Vapor Extraction Well, Probe, and Conveyance Pipeline Installation

All well installation will be initiated prior to civil construction and completed by OPOG's technical representatives with subcontracted drillers. Prior to construction, all vapor extraction wells, probes, and proposed pipelines will be located and marked. The contractor will use their best efforts to minimize disruption to businesses during this activity. Careful planning, utility location, and advance notifications will be performed prior to construction.

#### 4.1.4.2 Treatment Systems

As noted above, the treatment equipment within ISVE1 and the GWTS will be reused. However, for SVE2, it is expected that all the equipment in the existing equipment enclosure/shipping container (i.e., the blower, the heat exchanger, associated instrumentation, and other items shown on the current system drawings as being inside the equipment enclosure) and the GAC vessels will be replaced. As such, work will be performed in parallel with well and pipeline construction when feasible to expedite the schedule. GAC vessels will still be procured on a rental basis to allow flexible implementation, as described above.

## 4.2 Startup, Operation, and Evaluation

The Startup/Shakedown Testing are critical activities to verify that the system meets its intended performance. Given that components of the existing ISVE1 system and the GWTS will be leveraged to achieve the RAOs, startup activities will mainly be focused on tuning the extraction and treatment

equipment for the new flow conditions. For SVE2, a larger startup and optimization effort is expected given the amount of new equipment planned. Operators will also be verifying appropriate vacuum levels in the VMPs that surround the new and existing VEWs for both systems, and determining the need for system optimizations to achieve RAOs. Additional information on system performance evaluation, optimization, and contingencies is presented in the PMP. Operational procedures for the full-scale SVE system will also be detailed in one integrated OM&M Manual, which will incorporate appropriate elements of the current OM&M Manuals for the existing systems. In addition, a stand-alone Quality Assurance Project Plan (QAPP) will be prepared for the full-scale SVE system, as requested by USEPA. The QAPP will include the systematic planning and Data Quality Objectives (DQOs) for the project and will integrate information presented in the current Sampling and Analysis Plan (SAP) and Field Sampling Plan (FSP). The QAPP will also provide a comprehensive description of the task/project objectives and the associated procedures for each of those objectives as prescribed in the regulations and the associated USEPA guidance.

## 4.3 Substantive Permit Compliance

This section provides a description of the substantive permitting requirements for implementation of the remedial action. These requirements are further described below.

### 4.3.1 CERCLA and ARARs Requirements

Under CERCLA Section 121(e), 42 U.S.C. Section 9621(e), CERCLA response actions are exempted by law from the requirement to obtain federal, state, or local permits related to any on-site activities conducted. However, USEPA OSWER Directive 9355.7-03 clarifies USEPA's policy with respect to obtaining permits for activities at a CERCLA site. The substantive requirements of permits, which will otherwise have been required, are met on-site through the USEPA approval process. Therefore, on-site facilities will not require permits, but must comply with ARARs.

The ARARs are cleanup standards promulgated under federal or state laws that address a pollutant found at a Superfund site. ARARs are those standards that, while not legally "applicable" to a particular contaminant, type of response action, etc., address problems sufficiently similar to those encountered at a CERCLA site that their use is deemed suitable to the Site. The ARARs reference specific standards and rules that are essentially permitting requirements for the state and local regulatory/permitting agencies. To the extent that the ARARs reference specific standards and rules of an agency, that agency's rules will be complied with, but without actually applying, paying for, and obtaining a permit.

The definitions of "on-site" and "off-site" are important because in accordance with CERCLA Section 121(e), 42 U.S.C. Section 9621(e), CERCLA response actions are exempted by law from the requirement to obtain federal, state, or local permits related to any activities conducted entirely on-site. In this case, "on-site" refers to the facility or areas designated as part of the superfund boundary, and the full-scale system is within this boundary. "Off-site" refers to areas outside of the superfund boundary.

### 4.3.2 South Coast Air Quality Management District

Discharge emissions from the SVE, DPE, and groundwater off-gas treatment are regulated by the South Coast Air Quality Management District (SCAQMD) through the issuance of a Permit to Construct and/or Permit to Operate. Although the project is not required to formally obtain permits because of superfund activities, the proposed remedial measure must meet the substantive requirements.

These requirements are presented in SCAQMD Rule 1401 (New Source Review of Toxic Air Contaminants) and Risk Assessment Procedures for Rules 1401 and 212, Version 7.0 (SCAQMD 2005). As noted therein, the cumulative risk of discharge from SVE1 must be considered with the vapor discharge from the groundwater treatment plant, given it is adjacent. Upon acceptance of the final PDR, CDM Smith will use estimated influent concentrations to generate two draft Health Risk Assessments (HRAs) to determine operational requirements for substantive compliance. The first HRA will address SVE1 and the GWTS, and the second will address SVE2.

## 4.3.3 Local Agency Permit Compliance

Permit compliance with local agencies may require that detailed drawings or engineering calculations be prepared to accompany the submittal for reviews and plan check, if needed.

### 4.3.3.1 City of Whittier

Although the reuse of some existing ISVE system components simplifies the scope of construction, and thus the potential permitting/substantive compliance steps, in either access scenario, the conveyance will cross Putnam Street and enter city rights-of-way (ROW). However, as was done with ISVE2, OPOG is planning on working closely with city officials to make sure all substantive permitting requirements are met without actually pulling any permits. OPOG will coordinate with the city to identify their preferred means for granting additional easements space within the ROW, which is expected to be consolidation of all easement language for the groundwater treatment conveyance in Putnam Street, and the existing ISVE2 conveyance in the alley that splits the southern half of the Rippy property from the Merchant Metals lot. Although it is expected that the coordination with the city will be relatively easy, OPOG may request USEPA involvement, if necessary.

### 4.3.3.2 Los Angeles County Fire Department, Hazardous Material Division

Fire department approval is generally required from Los Angeles County Fire Department (LACFD) if potentially hazardous materials and chemicals above certain quantities will be stored and managed at a property within their jurisdiction. Since no hazardous materials or chemicals will be stored or used by the treatment system, a permit or substantive compliance is not anticipated.

### 4.3.3.3 Southern California Edison

Given additional power is needed at the SVE2 location, OPOG will be requesting additional power from Southern California Edison (SCE). This will likely require SCE to install additional transformers to accommodate the increased power required.

### 4.3.3.4 Drilling Fluids, Cuttings, and Purge Water Permits

All solids including drill cuttings will be transported off-site to an appropriate disposal facility. Pre-disposal samples for laboratory analysis required by the disposal facility will be collected. If the materials are deemed hazardous, OPOG will use its USEPA Facility identification numbers.

Liquids such as well development purge water will be containerized at OU-1 prior to being properly disposed at a permitted disposal facility or at the groundwater treatment plant.

### 4.3.3.5 Los Angeles County Sanitation Districts

The existing sewer discharge permit utilized by the GWTS will likely need to be amended to account for a change to the process (i.e., the addition of the DPE wells) and possibly the additional flow. Currently, the permit allows 30 gpm of flow. If each DPE well produces 1.5 gpm, the new total flow rate will be approximately 22.5 gpm, which is likely not close enough to the current maximum to

necessitate a request for increased flow. However, the extent of additional permitting activities will be verified with Los Angeles County Sanitation Districts (LACSD) upon approval of this PDR.

# Section 5

# Access and Institutional Controls

As prescribed in the OU-1 ROD, the On-Site Soils Full-scale remedy consists of SVE/Partial Capping/ICs. The SVE system includes the installation of shallow and deep soil VEW, DPE wells, VMPs, conveyance pipelines, and augmentation of the existing ISVE1 and ISVE2 systems, as described above. The capping component will consist of maintaining the existing pavement at OU-1 in order to improve SVE effectiveness and prevent direct contact of contaminated soil, while ICs would be developed and implemented to ensure that the existing pavement is maintained free of major cracks, fractures, and holes. Per the 2008 ROD, USEPA considers the existing pavement as sufficient and no new cap needs to be constructed. Additionally, ICs may also include a site management plan that addresses potential future excavation on the Site, e.g., for utility repair or other needs to access the subsurface soils, if necessary and appropriate. The implementation of ICs, including potential requirements for any land use covenants or building permit restrictions, will be negotiated with and need to be accepted by the Property Owners. The negotiated ICs will be recorded as a provision defined in the access agreements.

The On-Site Full-scale remedy will be installed on the following private and municipal properties not under control by OPOG—TerraPave, Bishop, Rippy, Kaiser, City of Whittier, and Robert Assil (current owner of the Omega property). The remedy will be installed on property under control by third parties. As required by the October 2010 CD, OPOG will use best efforts to secure an agreement for access, or if USEPA so requests, an agreement in the form of land covenant or the recordation of an easement. Through the installation of ISVE1, ISVE2, and the soil vapor stepout program described in Section 2, OPOG currently has various forms of access/easement agreements with all of the property owners cited above, but will need to negotiate further access/easements as generally set forth below.

OPOG will use its best efforts to modify the above mentioned access/easement agreements, to the extent necessary, for the purpose of implementing the On-Site Soils Full-scale remedy and associated ICs, and will request USEPA assistance if unable to do so. Appropriate ICs will remain in place until such time as the USEPA deems the OU-1 soils remedy complete.

# Section 6

# References


CDM Smith (formerly Camp Dresser & McKee Inc. [CDM Inc.]). 2013. *Full-scale On Site Soils Remedy Performance Monitoring Plan (DRAFT)*, Operable Unit 1. August 1, 2013.

CDM Smith. 2012. *Pre-Design Soil Vapor Probe Installation and Sampling Results, Omega Chemical Site Remedial Design/Remedial Action for Operable Unit 1 Soils.* March 16.

CDM Smith. 2011. *Dual Phase Extraction Pilot Test Report.* November 3.

CDM Smith. 2010c. *Final Remedial Design/Remedial Action Work Plan Remedial Work Plan.* December 1.

CDM Smith. 2010b. *Removal Action Completion Report (Final).* April 7.

CDM Smith. 2010a. *Interim Soil Vapor Extraction System Preliminary Design Report (FINAL).* March 17.

CDM Smith. 2008. *Final Feasibility Study for Onsite Soils*. May 21.

CDM Smith. 2007a. *Final On-Site Soils Remedial Investigation Report*. November 9.

CDM Smith. 2007b. *Technical Memorandum, Expanded Soil Vapor Extraction Pilot Test Findings, Omega Chemical Superfund Site*. August 31.

CDM Smith. 2007c. *Technical Memorandum, Soil Vapor Extraction Pilot Test Initial Findings, Omega Chemical Superfund Site*. February 5.

CDM Smith. 2005a. *Removal Action Plan and Preliminary Design Report*. December 16.

CDM Smith. 2005b. *Engineering Evaluation and Cost Analysis*, July 29.

CDM Smith. 2005c. *Revised Report Addendum for Additional Data Collection in the Phase 1a Area*. March 30.

de maximis. 2013. *Short Term Mitigation Air Sampling Quarterly Report, Omega Chemical Superfund Site, First Quarter 2013.* June 27.

JHA Environmental Inc. 2012. *Draft Interim Soil Vapor Extraction System 2 Operations, Maintenance and Monitoring Manual (REVISED).* September 14.

JHA Environmental Inc. 2011. *Interim Soil Vapor Extraction System Operations, Maintenance and Monitoring Manual (REVISED).* November 18.

SCAQMD (South Coast Air Quality Management District. 2005. *Risk Assessment Procedures for Rules 1401 and 212. Version 7.0.* July 1. Available at: http://www.aqmd.gov/prdas/Risk%20Assessment/RiskAssessment.html [Accessed on October 15, 2012]

U.S. Army Corps of Engineers. 2002. *Engineering Manual No. 1110-1-4001, Soil Vapor Extraction and Bioventing.* June 3.

USEPA (U.S. Environmental Protection Agency). 2009. *Administrative Settlement Agreement and Order on Consent for Removal Action*, November 9.

USEPA. 2008. *Record of Decision- Operable Unit 1 (Soils), Omega Chemical Superfund Site*. September.

USEPA. 2005. *Action Memorandum*. September 27.

USEPA. 2001. *Consent Decree No. 00-12471*. February 28.

# Appendix A
# Design Basis and Process Calculations

# Appendix A
# Design Basis and Process Calculations

## Table of Contents


- Influent Estimates – SVE1 and SVE2
- GAC Usage Estimates – SVE1 and SVE2
- Pressure Loss Calculations
    - Vapor Phase (SVE and DPE Wells) – SVE1
    - Vapor Phase (SVE Wells) – SVE2
    - Liquid Phase (DPE Wells)


CDM Smith

**Table 3-3**
**Estimated Influent Concentrations**

Performed by DN Date 5/24/2013
Checked by JTB Date 7/30/2013

| Extraction Well ID | Well Status | Vadose Zone | Plant | Anticipated Flow Rate (SCFM) | Estimated Influent Concentration (ppbv) | | | | | | | | | | | | | | | | | | |
|---|---|---|---|---|---|---|---|---|---|---|---|---|---|---|---|---|---|---|---|---|---|---|---|
| | | | | | PCE | TCE | 11DCE | VC | 111TCA | 11DCA | 12DCA | CF | MC | Freon11 | Freon12 | Freon113 | BEN | TOL | XYL | CD | MEK | IP | Total VOCs |
| **Plant 1** | | | | | | | | | | | | | | | | | | | | | | | |
| VE-1S | Existing | Shallow | 1 | 10 | 112 | 17 | 82 | 1 | 1 | 1 | 1 | 1 | 9 | 5 | 1 | 9 | 1 | 1 | 5 | 5 | 4 | 10 | 265 |
| VE-5S | Existing | Shallow | 1 | 125 | 236 | 87 | 168 | 1 | 1 | 2 | 36 | 10 | 10 | 10 | 1 | 17 | 1 | 1 | 8 | 6 | 3 | 12 | 610 |
| VE-6S | Existing | Shallow | 1 | 100 | 236 | 94 | 91 | 1 | 1 | 2 | 1 | 1 | 8 | 9 | 1 | 18 | 1 | 1 | 4 | 5 | 3 | 10 | 487 |
| VE-8S | Existing | Shallow | 1 | 75 | 27036 | 92 | 61 | 12 | 85 | 12 | 43 | 12 | 117 | 23 | 12 | 104 | 12 | 12 | 58 | 48 | 36 | 119 | 27894 |
| VE-8SA | Existing | Shallow | 1 | 75 | 27036 | 92 | 61 | 12 | 85 | 12 | 43 | 12 | 117 | 23 | 12 | 104 | 12 | 12 | 58 | 48 | 36 | 119 | 27894 |
| VE-9S | Existing | Shallow | 1 | 10 | 729 | 47 | 163 | 2 | 2 | 2 | 2 | 11 | 14 | 34 | 2 | 131 | 2 | 1 | 7 | 7 | 4 | 15 | 1175 |
| VE-10S | Existing | Shallow | 1 | 40 | 615 | 51 | 211 | 1 | 1 | 2 | 1 | 7 | 11 | 9 | 1 | 34 | 1 | 2 | 7 | 6 | 4 | 13 | 978 |
| VE-11S | Existing | Shallow | 1 | 45 | 2060 | 222 | 452 | 3 | 3 | 5 | 18 | 46 | 24 | 69 | 2 | 302 | 3 | 2 | 12 | 11 | 7 | 24 | 3264 |
| VE-11SA | Existing | Shallow | 1 | 45 | 2060 | 222 | 452 | 3 | 3 | 5 | 18 | 46 | 24 | 69 | 2 | 302 | 3 | 2 | 12 | 11 | 7 | 24 | 3264 |
| VE-12S | Existing | Shallow | 1 | 30 | 249 | 15 | 58 | 1 | 1 | 1 | 1 | 4 | 9 | 25 | 1 | 148 | 1 | 1 | 5 | 5 | 3 | 10 | 538 |
| VE-14S | Existing | Shallow | 1 | 35 | 7 | 4 | 1 | 1 | 1 | 1 | 1 | 1 | 5 | 2 | 1 | 3 | 2 | 7 | 13 | 3 | 2 | 6 | 60 |
| VE-15S | Existing | Shallow | 1 | 90 | 42 | 30 | 24 | 1 | 1 | 1 | 1 | 1 | 10 | 4 | 1 | 7 | 1 | 2 | 6 | 5 | 3 | 11 | 152 |
| VE-2D | Existing | Deep | 1 | 33.3 | 221200 | 35354 | 23946 | 978 | 3482 | 840 | 963 | 696 | 979 | 2669 | 971 | 35227 | 344 | 292 | 1335 | 4819 | 983 | 4882 | 339962 |
| VE-2DA | Existing | Deep | 1 | 33.3 | 221200 | 35354 | 23946 | 978 | 3482 | 840 | 963 | 696 | 979 | 2669 | 971 | 35227 | 344 | 292 | 1335 | 4819 | 983 | 4882 | 339962 |
| VE-2DB | Existing | Deep | 1 | 33.3 | 221200 | 35354 | 23946 | 978 | 3482 | 840 | 963 | 696 | 979 | 2669 | 971 | 35227 | 344 | 292 | 1335 | 4819 | 983 | 4882 | 339962 |
| DPE-3 | New | Deep | 1 | 100 | 33917 | 4466 | 16132 | 391 | 1833 | 2470 | 494 | 410 | 2880 | 2313 | 2022 | 7698 | 626 | 5307 | 4605 | 0 | 0 | 0 | 85565 |
| DPE-4 | New | Deep | 1 | 100 | 184063 | 12287 | 63914 | 335 | 1537 | 2068 | 421 | 2001 | 2409 | 11356 | 1694 | 51446 | 531 | 4427 | 3842 | 74 | 54 | 273 | 342732 |
| DPE-5 | New | Deep | 1 | 100 | 99282 | 5796 | 25988 | 313 | 1466 | 1976 | 395 | 2429 | 2304 | 3470 | 1618 | 12786 | 501 | 4246 | 3684 | 0 | 0 | 0 | 166254 |
| DPE-8 | New | Deep | 1 | 100 | 63 | 9 | 6 | 1 | 1 | 1 | 1 | 1 | 3 | 2 | 1 | 3 | 1 | 3 | 3 | 3 | 11 | 6 | 120 |
| DPE-9 | New | Deep | 1 | 100 | 163066 | 10271 | 52367 | 319 | 1472 | 1982 | 401 | 2368 | 2310 | 8856 | 1624 | 39125 | 507 | 4249 | 3687 | 74 | 54 | 273 | 293005 |
| **Total** | - | - | - | 1279.9 | 58189 | 5371 | 14320 | 185 | 775 | 732 | 219 | 624 | 869 | 2250 | 621 | 11469 | 198 | 1449 | 1350 | 396 | 92 | 443 | 99553 |
| **Max (% by volume)** | | | | | 0.022% | 0.004% | 0.006% | 0.000% | 0.000% | 0.000% | 0.000% | 0.000% | 0.000% | 0.001% | 0.000% | 0.005% | 0.000% | 0.001% | 0.000% | 0.000% | 0.000% | 0.000% | |
| **LEL?** | | | | | N/A | 8.0% | 6.5% | 3.6% | 7.5% | 5.4% | 6.2% | N/A | 13.0% | N/A | N/A | N/A | 1.2% | 1.3% | 1.0% | 1.3% | 1.9% | 2.2% | |
| **Percent of LEL** | | | | | -- | 0.044% | 0.098% | 0.003% | 0.005% | 0.005% | 0.002% | -- | 0.002% | -- | -- | -- | 0.005% | 0.042% | 0.048% | 0.037% | 0.005% | 0.022% | |
| **Greater than 10% LEL?** | | | | | N/A | NO | NO | NO | NO | NO | NO | N/A | NO | N/A | N/A | N/A | NO | NO | NO | NO | NO | NO | |
| **Plant 2** | | | | | | | | | | | | | | | | | | | | | | | |
| VE-20S | Existing | Shallow | 2 | 100 | 223 | 7 | 184 | 6 | 6 | 6 | 6 | 6 | 59 | 97 | 7 | 556 | 7 | 7 | 31 | 24 | 18 | 59 | 1309 |
| VE-21S | Existing | Shallow | 2 | 30 | 3538 | 301 | 918 | 10 | 11 | 10 | 12 | 83 | 99 | 204 | 10 | 971 | 11 | 10 | 51 | 40 | 30 | 99 | 6409 |
| VE-22S | Existing | Shallow | 2 | 65 | 25828 | 1873 | 5332 | 40 | 40 | 61 | 52 | 1047 | 400 | 1484 | 40 | 6497 | 40 | 40 | 200 | 159 | 121 | 401 | 43655 |
| VE-23S | Existing | Shallow | 2 | 50 | 1032 | 96 | 239 | 6 | 6 | 7 | 9 | 56 | 60 | 35 | 7 | 89 | 14 | 7 | 31 | 24 | 19 | 61 | 1798 |
| VE-24S | Existing | Shallow | 2 | 25 | 1591 | 111 | 1237 | 6 | 6 | 6 | 6 | 16 | 59 | 221 | 7 | 505 | 7 | 7 | 31 | 24 | 19 | 59 | 3920 |
| VE-25S | Existing | Shallow | 2 | 150 | 1360 | 160 | 123 | 2 | 2 | 9 | 11 | 295 | 20 | 5 | 2 | 9 | 3 | 2 | 10 | 8 | 6 | 20 | 2047 |
| VE-26S | Existing | Shallow | 2 | 220 | 6022 | 934 | 1829 | 10 | 10 | 17 | 44 | 421 | 101 | 515 | 10 | 2424 | 10 | 10 | 49 | 39 | 30 | 101 | 12575 |
| VE-27S | Existing | Shallow | 2 | 50 | 1022 | 201 | 493 | 3 | 4 | 7 | 12 | 235 | 33 | 183 | 3 | 493 | 4 | 3 | 17 | 13 | 10 | 33 | 2770 |
| VE-28S | Existing | Shallow | 2 | 25 | 230 | 28 | 14 | 3 | 2 | 3 | 3 | 59 | 26 | 5 | 2 | 8 | 3 | 2 | 13 | 10 | 8 | 26 | 445 |
| VE-29S | Existing | Shallow | 2 | 35 | 365 | 55 | 287 | 3 | 2 | 2 | 2 | 15 | 26 | 36 | 2 | 74 | 3 | 2 | 13 | 11 | 8 | 26 | 933 |
| VE-30S | Existing | Shallow | 2 | 150 | 387 | 41 | 125 | 2 | 2 | 2 | 2 | 37 | 20 | 12 | 2 | 24 | 2 | 3 | 10 | 8 | 8 | 20 | 707 |
| VE-31S | New | Shallow | 2 | 110 | 4826 | 1023 | 3626 | 10 | 30 | 39 | 12 | 8 | 46 | 325 | 32 | 925 | 10 | 76 | 70 | 29 | 10 | 33 | 11131 |
| VE-32S | New | Shallow | 2 | 110 | 32541 | 7071 | 26551 | 20 | 92 | 124 | 25 | 21 | 144 | 1857 | 101 | 5232 | 31 | 265 | 230 | 0 | 0 | 0 | 74303 |
| VE-33S | New | Shallow | 2 | 110 | 21579 | 2648 | 17762 | 20 | 92 | 124 | 25 | 20 | 144 | 2296 | 101 | 9542 | 31 | 265 | 230 | 0 | 0 | 0 | 54879 |
| VE-34S | New | Shallow | 2 | 110 | 64808 | 5875 | 96251 | 287 | 637 | 906 | 310 | 295 | 893 | 22263 | 639 | 102694 | 289 | 1442 | 1563 | 504 | 917 | 1752 | 302327 |
| VE-35S | New | Shallow | 2 | 110 | 49380 | 5070 | 78196 | 224 | 549 | 768 | 246 | 263 | 787 | 23116 | 565 | 107792 | 239 | 1328 | 1377 | 369 | 632 | 951 | 271851 |
| VE-36S | New | Shallow | 2 | 110 | 26797 | 4245 | 51543 | 102 | 369 | 488 | 121 | 140 | 564 | 21982 | 403 | 103619 | 134 | 1054 | 962 | 231 | 207 | 98 | 213058 |
| VE-37S | New | Shallow | 2 | 110 | 14545 | 4173 | 40756 | 118 | 334 | 429 | 132 | 145 | 490 | 21393 | 330 | 105412 | 119 | 877 | 824 | 421 | 268 | 862 | 191629 |
| VE-38S | New | Shallow | 2 | 110 | 41340 | 4722 | 53115 | 166 | 679 | 905 | 203 | 417 | 1091 | 20573 | 745 | 91822 | 241 | 1944 | 1743 | 131 | 110 | 165 | 220110 |
| VE-39S | New | Shallow | 2 | 110 | 5384 | 183 | 254 | 24 | 74 | 107 | 28 | 49 | 112 | 153 | 81 | 480 | 32 | 196 | 192 | 36 | 70 | 71 | 7524 |
| VE-40S | New | Shallow | 2 | 110 | 71824 | 2329 | 25442 | 75 | 351 | 474 | 95 | 334 | 553 | 4805 | 388 | 14016 | 120 | 1017 | 883 | 2 | 3 | 5 | 122715 |
| VE-6D | New | Deep | 2 | 100 | 71202 | 4264 | 21442 | 215 | 1008 | 1359 | 272 | 1683 | 1584 | 2408 | 1112 | 8596 | 350 | 2919 | 2533 | 0 | 0 | 0 | 120947 |
| VE-7D | New | Deep | 2 | 100 | 461458 | 13689 | 262106 | 274 | 1283 | 1729 | 346 | 1057 | 2016 | 54479 | 1416 | 796457 | 438 | 3715 | 3224 | 0 | 0 | 0 | 1603685 |
| VE-10D | New | Deep | 2 | 100 | 329201 | 19356 | 121223 | 349 | 1611 | 2168 | 439 | 3447 | 2527 | 22552 | 1776 | 139226 | 554 | 4647 | 4033 | 74 | 54 | 273 | 653511 |
| VE-11D | New | Deep | 2 | 100 | 322399 | 23912 | 157854 | 253 | 1184 | 1639 | 428 | 11488 | 1860 | 23952 | 1306 | 102052 | 413 | 3428 | 2974 | 0 | 0 | 0 | 655141 |
| VE-12D | New | Deep | 2 | 100 | 138914 | 9155 | 135105 | 196 | 916 | 1235 | 247 | 1880 | 1440 | 40928 | 1011 | 242412 | 313 | 2654 | 2303 | 0 | 0 | 0 | 578709 |
| VE-13D | New | Deep | 2 | 100 | 325080 | 28421 | 181016 | 260 | 1218 | 1715 | 516 | 17358 | 1913 | 24608 | 1343 | 58767 | 425 | 3525 | 3059 | 0 | 0 | 0 | 649225 |
| **Total** | - | - | - | 2600 | 78851 | 5529 | 50796 | 106 | 416 | 568 | 144 | 1580 | 667 | 11616 | 452 | 75157 | 152 | 1164 | 1052 | 86 | 104 | 204 | 228646 |
| **Max (% by volume)** | | | | | 0.046% | 0.003% | 0.026% | 0.000% | 0.000% | 0.000% | 0.000% | 0.002% | 0.000% | 0.005% | 0.000% | 0.080% | 0.000% | 0.000% | 0.000% | 0.000% | 0.000% | 0.000% | |
| **LEL?** | | | | | N/A | 8.0% | 6.5% | 3.6% | 7.5% | 5.4% | 6.2% | N/A | 13.0% | N/A | N/A | N/A | 1.2% | 1.3% | 1.0% | 1.3% | 1.9% | 2.2% | |
| **Percent of LEL** | | | | | -- | 0.036% | 0.403% | 0.001% | 0.002% | 0.004% | 0.001% | -- | 0.002% | -- | -- | -- | 0.005% | 0.037% | 0.042% | 0.004% | 0.005% | 0.008% | |
| **Greater than 10% LEL?** | | | | | N/A | NO | NO | NO | NO | NO | NO | N/A | NO | N/A | N/A | N/A | NO | NO | NO | NO | NO | NO | |

**Notes:**

LEL - Lower explosive Limit
PCE - Tetrachloroethene
TCE - Trichloroethene
11DCE - 1,1-Dichloroethene
VC - Vinyl Chloride
111TCA - 1,1,1-Trichloroethane
11DCA - 1,1-Dichloroethane
12DCA - 1,2-Dichloroethane
CF - Chloroform
MC - Methylene Chloride
Freon11 - Trichlorofluoromethane
Freon12 - Dichlorodifluoromethane
Freon113 - 1,1,2-Trichloro-1,2,2-trifluoroethane
BEN - Benzene
TOL - Toluene
XYL - o-Xylene
CD - Carbon Dissulfide
MEK - Methyl Ethyl Ketone (2-Butanone)
IP - Isopropanol

**Omega Chemical Site**
**Full Scale On Site Soils Remedy**
**Preliminary Design Report**
**Influent Estimate Detail for Well:** VE-1S
**Basis for Estimated Concentrations:** VE-1S

Performed by JTB Date 10/2/2012
Checked by IL Date 10/10/2012

See Notes on Summary Tab

| Average of NumericResult2 | | | SampleLocation | SampBegDepth | SampEndDepth | Date | | | |
|---|---|---|---|---|---|---|---|---|---|
| | | | VE-1S (blank) (blank) | | | | | | Overall Average |
| Parameter | CAS | Units2 | 1/16/2012 11:45 | 2/20/2012 13:25 | 3/26/2012 17:18 | 4/23/2012 16:27 | 5/15/2012 9:43 | 6/5/2012 12:48 | |
| 1,1,1-Trichloroethane (TCA) | 71-55-6 | ppbv | 2.0E+00 | 5.5E-01 | 9.2E-01 | 5.5E-01 | 9.2E-01 | 2.6E+00 | 1.3E+00 |
| 1,1,2,2-TETRACHLOROETHANE | 79-34-5 | ppbv | | 1.0E+00 | 1.7E+00 | 1.2E+00 | 1.3E+00 | 5.0E+00 | 2.0E+00 |
| 1,1,2-TRICHLOROETHANE | 79-00-5 | ppbv | 2.0E+00 | 5.5E-01 | 9.2E-01 | 5.5E-01 | 7.3E-01 | 2.6E+00 | 1.2E+00 |
| 1,1-DICHLOROETHANE | 75-34-3 | ppbv | 2.2E+00 | 4.9E-01 | 9.9E-01 | 4.9E-01 | 7.4E-01 | 2.5E+00 | 1.2E+00 |
| 1,1-DICHLOROETHENE | 75-35-4 | ppbv | 7.6E+01 | 2.5E+01 | 8.8E+01 | 1.0E+02 | 1.3E+02 | 6.6E+01 | 8.2E+01 |
| 1,2,4-TRICHLOROBENZENE | 120-82-1 | ppbv | | 2.0E+00 | 3.5E+00 | 2.2E+00 | 2.7E+00 | 1.0E+01 | 4.1E+00 |
| 1,2,4-TRIMETHYLBENZENE | 95-63-6 | ppbv | | 1.4E+00 | 2.6E+00 | 1.6E+00 | 2.0E+00 | 7.5E+00 | 3.1E+00 |
| 1,2-Dibromoethane (EDB) | 106-93-4 | ppbv | 2.1E+00 | 5.2E-01 | 9.1E-01 | 5.2E-01 | 6.5E-01 | 2.5E+00 | 1.2E+00 |
| 1,2-DICHLOROBENZENE | 95-50-1 | ppbv | | 5.0E-01 | 8.3E-01 | 5.0E-01 | 6.7E-01 | 2.5E+00 | 1.0E+00 |
| 1,2-DICHLOROETHANE | 107-06-2 | ppbv | 2.2E+00 | 4.9E-01 | 9.9E-01 | 4.9E-01 | 7.4E-01 | 2.5E+00 | 1.2E+00 |
| 1,2-DICHLOROPROPANE | 78-87-5 | ppbv | 2.2E+00 | 4.3E-01 | 8.7E-01 | 6.5E-01 | 6.5E-01 | 2.6E+00 | 1.2E+00 |
| 1,2-Dichlorotetrafluoroethane | 76-14-2 | ppbv | 2.1E+00 | 2.0E+00 | 3.4E+00 | 2.1E+00 | 2.7E+00 | 1.0E+01 | 3.7E+00 |
| 1,3,5-TRIMETHYLBENZENE | 108-67-8 | ppbv | | 6.1E-01 | 8.1E-01 | 6.1E-01 | 6.1E-01 | 2.4E+00 | 1.0E+00 |
| 1,3-DICHLOROBENZENE | 541-73-1 | ppbv | | 5.0E-01 | 8.3E-01 | 5.0E-01 | 6.7E-01 | 2.5E+00 | 1.0E+00 |
| 1,4-DICHLOROBENZENE | 106-46-7 | ppbv | | 5.0E-01 | 8.3E-01 | 5.0E-01 | 6.7E-01 | 2.5E+00 | 1.0E+00 |
| 1,4-DIOXANE | 123-91-1 | ppbv | 1.1E+01 | 1.0E+01 | 1.7E+01 | 1.1E+01 | 1.4E+01 | 5.0E+01 | 1.9E+01 |
| 2-HEXANONE | 591-78-6 | ppbv | 4.9E-01 | 1.5E+00 | 2.7E+00 | 1.7E+00 | 2.0E+00 | 7.6E+00 | 2.6E+00 |
| 4-ETHYLTOLUENE | 622-96-8 | ppbv | | 6.1E-01 | 8.1E-01 | 6.1E-01 | 6.1E-01 | 2.4E+00 | 1.0E+00 |
| ACETONE | 67-64-1 | ppbv | 2.6E+01 | 8.0E+00 | 5.0E+00 | 3.8E+00 | 5.0E+00 | 1.2E+01 | 1.0E+01 |
| BENZENE | 71-43-2 | ppbv | 6.3E-01 | 6.3E-01 | 9.4E-01 | 6.3E-01 | 1.3E+00 | 2.5E+00 | 1.1E+00 |
| BENZYL CHLORIDE | 100-44-7 | ppbv | | 1.5E+00 | 2.7E+00 | 1.7E+00 | 2.1E+00 | 7.5E+00 | 3.1E+00 |
| BROMODICHLOROMETHANE | 75-27-4 | ppbv | 2.1E+00 | 4.5E-01 | 9.0E-01 | 6.0E-01 | 7.5E-01 | 2.5E+00 | 1.2E+00 |
| BROMOFORM | 75-25-2 | ppbv | | 4.8E-01 | 8.7E-01 | 5.8E-01 | 6.8E-01 | 2.5E+00 | 1.0E+00 |
| BROMOMETHANE | 74-83-9 | ppbv | 2.1E+00 | 5.2E-01 | 7.7E-01 | 5.2E-01 | 7.7E-01 | 2.6E+00 | 1.2E+00 |
| CARBON DISULFIDE | 75-15-0 | ppbv | 1.1E+01 | 1.9E+00 | 3.5E+00 | 2.2E+00 | 2.9E+00 | 1.0E+01 | 5.2E+00 |
| CARBON TETRACHLORIDE | 56-23-5 | ppbv | 2.1E+00 | 4.8E-01 | 9.5E-01 | 4.8E-01 | 6.4E-01 | 2.5E+00 | 1.2E+00 |
| CHLOROBENZENE | 108-90-7 | ppbv | 2.2E+00 | 4.3E-01 | 8.7E-01 | 6.5E-01 | 6.5E-01 | 2.6E+00 | 1.2E+00 |
| CHLOROETHANE | 75-00-3 | ppbv | 2.3E+00 | 3.8E-01 | 7.6E-01 | 3.8E-01 | 7.6E-01 | 2.7E+00 | 1.2E+00 |
| CHLOROFORM | 67-66-3 | ppbv | 6.1E-01 | 4.1E-01 | 8.2E-01 | 6.1E-01 | 6.1E-01 | 2.5E+00 | 9.2E-01 |
| CHLOROMETHANE | 74-87-3 | ppbv | 4.4E+00 | 4.8E-01 | 9.7E-01 | 4.8E-01 | 4.8E-01 | 2.4E+00 | 1.5E+00 |
| CIS-1,2-DICHLOROETHENE | 156-59-2 | ppbv | 7.6E-01 | 5.0E-01 | 1.0E+00 | 5.0E-01 | 7.6E-01 | 2.5E+00 | 1.0E+00 |
| CIS-1,3-DICHLOROPROPENE | 10061-01-5 | ppbv | 2.2E+00 | 4.4E-01 | 8.8E-01 | 6.6E-01 | 6.6E-01 | 2.4E+00 | 1.2E+00 |
| DIBROMOCHLOROMETHANE | 124-48-1 | ppbv | 2.1E+00 | 4.7E-01 | 9.4E-01 | 5.9E-01 | 7.0E-01 | 2.5E+00 | 1.2E+00 |
| ETHYLBENZENE | 100-41-4 | ppbv | 2.3E-01 | 4.6E-01 | 9.2E-01 | 4.6E-01 | 6.9E-01 | 2.5E+00 | 8.8E-01 |
| Freon 11 | 75-69-4 | ppbv | 4.1E+00 | 1.6E+00 | 3.9E+00 | 4.8E+00 | 7.8E+00 | 5.0E+00 | 4.5E+00 |
| Freon 113 | 76-13-1 | ppbv | 6.3E+00 | 2.7E+00 | 9.0E+00 | 1.0E+01 | 1.6E+01 | 7.8E+00 | 8.6E+00 |
| Freon 12 | 75-71-8 | ppbv | 8.1E-01 | 6.1E-01 | 1.0E+00 | 6.1E-01 | 8.1E-01 | 2.4E+00 | 1.0E+00 |
| HEXACHLOROBUTADIENE | 87-68-3 | ppbv | | 1.5E+00 | 2.6E+00 | 1.6E+00 | 2.1E+00 | 7.5E+00 | 3.1E+00 |
| HEXANE (N-HEXANE) | 110-54-3 | ppbv | 1.0E+01 | 2.0E+00 | 3.4E+00 | 2.3E+00 | 2.8E+00 | 9.9E+00 | 5.2E+00 |
| ISOPROPYL ALCOHOL (ISOPROPANOL) | 67-63-0 | ppbv | 1.1E+01 | 4.9E+00 | 9.0E+00 | 5.3E+00 | 6.9E+00 | 2.5E+01 | 1.0E+01 |
| m,p-Xylene | 1330-20-7 | ppbv | 1.2E+00 | 2.1E+00 | 3.5E+00 | 2.3E+00 | 2.8E+00 | 9.9E+00 | 3.6E+00 |
| Methyl ethyl ketone | 78-93-3 | ppbv | 7.1E+00 | 1.4E+00 | 2.7E+00 | 1.7E+00 | 2.0E+00 | 7.5E+00 | 3.7E+00 |
| METHYL ISOBUTYL KETONE | 108-10-1 | ppbv | 2.2E+00 | 1.5E+00 | 2.7E+00 | 1.7E+00 | 2.0E+00 | 7.6E+00 | 2.9E+00 |
| METHYL TERT-BUTYL ETHER | 1634-04-4 | ppbv | 2.2E+00 | 1.9E+00 | 3.6E+00 | 2.2E+00 | 2.8E+00 | 1.0E+01 | 3.8E+00 |
| METHYLENE CHLORIDE | 75-09-2 | ppbv | 2.0E+00 | 4.9E+00 | 8.6E+00 | 5.5E+00 | 6.9E+00 | 2.5E+01 | 8.8E+00 |
| O-XYLENE | 95-47-6 | ppbv | 4.6E-01 | 4.6E-01 | 9.2E-01 | 4.6E-01 | 6.9E-01 | 2.5E+00 | 9.2E-01 |
| STYRENE | 100-42-5 | ppbv | | 1.4E+00 | 2.6E+00 | 1.6E+00 | 2.1E+00 | 7.5E+00 | 3.1E+00 |
| Tetrachloroethene (PCE) | 127-18-4 | ppbv | 1.2E+02 | 2.4E+01 | 1.5E+02 | 1.3E+02 | 1.5E+02 | 1.1E+02 | 1.1E+02 |
| TOLUENE | 108-88-3 | ppbv | 1.1E+00 | 5.3E-01 | 8.0E-01 | 5.3E-01 | 1.1E+00 | 2.4E+00 | 1.1E+00 |
| TRANS-1,2-DICHLOROETHENE | 156-60-5 | ppbv | 2.0E+00 | 5.0E-01 | 1.0E+00 | 5.0E-01 | 7.6E-01 | 2.5E+00 | 1.2E+00 |
| TRANS-1,3-DICHLOROPROPENE | 10061-02-6 | ppbv | 2.2E+00 | 1.1E+00 | 1.8E+00 | 1.1E+00 | 1.3E+00 | 5.1E+00 | 2.1E+00 |
| Trichloroethene (TCE) | 79-01-6 | ppbv | 2.6E+01 | 4.5E+00 | 2.2E+01 | 1.6E+01 | 2.0E+01 | 1.1E+01 | 1.7E+01 |
| VINYL ACETATE | 108-05-4 | ppbv | 1.1E+01 | 2.0E+00 | 3.4E+00 | 2.3E+00 | 2.8E+00 | 9.9E+00 | 5.2E+00 |
| VINYL CHLORIDE | 75-01-4 | ppbv | 2.0E+00 | 3.9E-01 | 7.8E-01 | 3.9E-01 | 7.8E-01 | 2.3E+00 | 1.1E+00 |

**Omega Chemical Site**
**Full Scale On Site Soils Remedy**
**Preliminary Design Report**
**Influent Estimate Detail for Well:** VE-5S
**Basis for Estimated Concentrations:** VE-5S

Performed by JTB Date 10/2/2012
Checked by IL Date 10/10/2012

See Notes on Summary Tab

| Average of NumericResult2 | | | SampleLocation | SampBegDepth | SampEndDepth | Date | | | |
|---|---|---|---|---|---|---|---|---|---|
| | | | VE-5S (blank) (blank) | | | | | | Overall Average |
| Parameter | CAS | Units2 | 1/16/2012 11:48 | 2/20/2012 13:31 | 3/26/2012 16:48 | 4/23/2012 16:29 | 5/15/2012 9:48 | 6/5/2012 12:53 | |
| 1,1,1-Trichloroethane (TCA) | 71-55-6 | ppbv | 2.0E+00 | 5.5E-01 | 5.5E-01 | 7.3E-01 | 2.0E+00 | 2.6E+00 | 1.4E+00 |
| 1,1,2,2-TETRACHLOROETHANE | 79-34-5 | ppbv | | 1.0E+00 | 1.0E+00 | 1.2E+00 | 3.9E+00 | 5.0E+00 | 2.4E+00 |
| 1,1,2-TRICHLOROETHANE | 79-00-5 | ppbv | 2.0E+00 | 5.5E-01 | 1.1E+00 | 9.2E-01 | 2.0E+00 | 2.6E+00 | 1.5E+00 |
| 1,1-DICHLOROETHANE | 75-34-3 | ppbv | 2.2E+00 | 4.9E-01 | 1.5E+00 | 1.2E+00 | 2.0E+00 | 2.5E+00 | 1.6E+00 |
| 1,1-DICHLOROETHENE | 75-35-4 | ppbv | 5.0E-01 | 5.0E-01 | 2.8E+02 | 2.1E+02 | 3.0E+02 | 2.2E+02 | 1.7E+02 |
| 1,2,4-TRICHLOROBENZENE | 120-82-1 | ppbv | | 2.0E+00 | 2.0E+00 | 2.2E+00 | 7.9E+00 | 1.0E+01 | 4.8E+00 |
| 1,2,4-TRIMETHYLBENZENE | 95-63-6 | ppbv | | 1.4E+00 | 4.9E+00 | 1.6E+00 | 5.9E+00 | 7.5E+00 | 4.3E+00 |
| 1,2-Dibromoethane (EDB) | 106-93-4 | ppbv | 2.1E+00 | 5.2E-01 | 5.2E-01 | 5.2E-01 | 2.0E+00 | 2.5E+00 | 1.3E+00 |
| 1,2-DICHLOROBENZENE | 95-50-1 | ppbv | | 5.0E-01 | 5.0E-01 | 5.0E-01 | 2.0E+00 | 2.5E+00 | 1.2E+00 |
| 1,2-DICHLOROETHANE | 107-06-2 | ppbv | 2.2E+00 | 4.9E-01 | 6.2E+01 | 5.4E+01 | 5.7E+01 | 4.2E+01 | 3.6E+01 |
| 1,2-DICHLOROPROPANE | 78-87-5 | ppbv | 2.2E+00 | 4.3E-01 | 4.3E-01 | 6.5E-01 | 1.9E+00 | 2.6E+00 | 1.4E+00 |
| 1,2-Dichlorotetrafluoroethane | 76-14-2 | ppbv | 2.1E+00 | 2.0E+00 | 2.0E+00 | 2.1E+00 | 8.0E+00 | 1.0E+01 | 4.4E+00 |
| 1,3,5-TRIMETHYLBENZENE | 108-67-8 | ppbv | | 6.1E-01 | 2.0E+00 | 6.1E-01 | 2.0E+00 | 2.4E+00 | 1.5E+00 |
| 1,3-DICHLOROBENZENE | 541-73-1 | ppbv | | 5.0E-01 | 5.0E-01 | 5.0E-01 | 2.0E+00 | 2.5E+00 | 1.2E+00 |
| 1,4-DICHLOROBENZENE | 106-46-7 | ppbv | | 5.0E-01 | 5.0E-01 | 5.0E-01 | 2.0E+00 | 2.5E+00 | 1.2E+00 |
| 1,4-DIOXANE | 123-91-1 | ppbv | 1.0E+01 | 1.0E+01 | 1.0E+01 | 1.1E+01 | 3.9E+01 | 5.0E+01 | 2.2E+01 |
| 2-HEXANONE | 591-78-6 | ppbv | 2.2E+00 | 1.5E+00 | 1.5E+00 | 1.7E+00 | 6.1E+00 | 7.6E+00 | 3.4E+00 |
| 4-ETHYLTOLUENE | 622-96-8 | ppbv | | 6.1E-01 | 1.0E+00 | 6.1E-01 | 2.0E+00 | 2.4E+00 | 1.3E+00 |
| ACETONE | 67-64-1 | ppbv | 5.5E+00 | 2.1E+00 | 5.5E+00 | 3.4E+00 | 8.0E+00 | 1.0E+01 | 5.8E+00 |
| BENZENE | 71-43-2 | ppbv | 6.3E-01 | 6.3E-01 | 6.3E-01 | 6.3E-01 | 1.9E+00 | 2.5E+00 | 1.1E+00 |
| BENZYL CHLORIDE | 100-44-7 | ppbv | | 1.5E+00 | 1.5E+00 | 1.7E+00 | 6.0E+00 | 7.5E+00 | 3.7E+00 |
| BROMODICHLOROMETHANE | 75-27-4 | ppbv | 2.1E+00 | 4.5E-01 | 4.5E-01 | 6.0E-01 | 1.9E+00 | 2.5E+00 | 1.3E+00 |
| BROMOFORM | 75-25-2 | ppbv | | 4.8E-01 | 4.8E-01 | 5.8E-01 | 2.0E+00 | 2.5E+00 | 1.2E+00 |
| BROMOMETHANE | 74-83-9 | ppbv | 2.1E+00 | 5.2E-01 | 5.2E-01 | 5.2E-01 | 2.1E+00 | 2.6E+00 | 1.4E+00 |
| CARBON DISULFIDE | 75-15-0 | ppbv | 1.1E+01 | 1.9E+00 | 1.9E+00 | 2.2E+00 | 8.0E+00 | 1.0E+01 | 5.8E+00 |
| CARBON TETRACHLORIDE | 56-23-5 | ppbv | 2.1E+00 | 4.8E-01 | 4.8E-01 | 4.8E-01 | 2.1E+00 | 2.5E+00 | 1.4E+00 |
| CHLOROBENZENE | 108-90-7 | ppbv | 2.2E+00 | 4.3E-01 | 4.3E-01 | 6.5E-01 | 2.0E+00 | 2.6E+00 | 1.4E+00 |
| CHLOROETHANE | 75-00-3 | ppbv | 2.3E+00 | 3.8E-01 | 3.8E-01 | 3.8E-01 | 1.9E+00 | 2.7E+00 | 1.3E+00 |
| CHLOROFORM | 67-66-3 | ppbv | 2.0E+00 | 4.1E-01 | 1.7E+01 | 1.4E+01 | 1.5E+01 | 1.1E+01 | 9.9E+00 |
| CHLOROMETHANE | 74-87-3 | ppbv | 9.7E-01 | 4.8E-01 | 4.8E-01 | 4.8E-01 | 1.9E+00 | 2.4E+00 | 1.1E+00 |
| CIS-1,2-DICHLOROETHENE | 156-59-2 | ppbv | 2.0E+00 | 5.0E-01 | 7.6E-01 | 7.6E-01 | 2.0E+00 | 2.8E+00 | 1.5E+00 |
| CIS-1,3-DICHLOROPROPENE | 10061-01-5 | ppbv | 2.2E+00 | 4.4E-01 | 4.4E-01 | 6.6E-01 | 2.0E+00 | 2.4E+00 | 1.4E+00 |
| DIBROMOCHLOROMETHANE | 124-48-1 | ppbv | 2.1E+00 | 4.7E-01 | 4.7E-01 | 5.9E-01 | 2.0E+00 | 2.5E+00 | 1.3E+00 |
| ETHYLBENZENE | 100-41-4 | ppbv | 2.1E+00 | 4.6E-01 | 4.6E-01 | 4.6E-01 | 2.1E+00 | 2.5E+00 | 1.3E+00 |
| Freon 11 | 75-69-4 | ppbv | 2.1E+00 | 1.1E+00 | 1.8E+01 | 1.3E+01 | 1.5E+01 | 1.0E+01 | 9.9E+00 |
| Freon 113 | 76-13-1 | ppbv | 2.1E+00 | 1.4E+00 | 2.3E+01 | 2.3E+01 | 2.9E+01 | 2.1E+01 | 1.7E+01 |
| Freon 12 | 75-71-8 | ppbv | 6.1E-01 | 6.1E-01 | 6.1E-01 | 6.1E-01 | 2.0E+00 | 2.4E+00 | 1.1E+00 |
| HEXACHLOROBUTADIENE | 87-68-3 | ppbv | | 1.5E+00 | 1.5E+00 | 1.6E+00 | 6.0E+00 | 7.5E+00 | 3.6E+00 |
| HEXANE (N-HEXANE) | 110-54-3 | ppbv | 1.0E+01 | 2.0E+00 | 2.0E+00 | 2.3E+00 | 7.9E+00 | 9.9E+00 | 5.8E+00 |
| ISOPROPYL ALCOHOL (ISOPROPANOL) | 67-63-0 | ppbv | 1.1E+01 | 4.9E+00 | 4.9E+00 | 5.3E+00 | 2.0E+01 | 2.5E+01 | 1.2E+01 |
| m,p-Xylene | 1330-20-7 | ppbv | 6.9E-01 | 2.1E+00 | 9.9E+00 | 2.3E+00 | 8.1E+00 | 9.9E+00 | 5.5E+00 |
| Methyl ethyl ketone | 78-93-3 | ppbv | 2.0E+00 | 1.4E+00 | 1.4E+00 | 1.7E+00 | 6.1E+00 | 7.5E+00 | 3.3E+00 |
| METHYL ISOBUTYL KETONE | 108-10-1 | ppbv | 2.2E+00 | 1.5E+00 | 1.5E+00 | 1.7E+00 | 6.1E+00 | 7.6E+00 | 3.4E+00 |
| METHYL TERT-BUTYL ETHER | 1634-04-4 | ppbv | 2.2E+00 | 1.9E+00 | 1.9E+00 | 2.2E+00 | 8.0E+00 | 1.0E+01 | 4.4E+00 |
| METHYLENE CHLORIDE | 75-09-2 | ppbv | 2.0E+00 | 4.9E+00 | 4.9E+00 | 5.5E+00 | 2.0E+01 | 2.5E+01 | 1.0E+01 |
| O-XYLENE | 95-47-6 | ppbv | 2.1E+00 | 4.6E-01 | 4.6E+00 | 4.6E-01 | 2.1E+00 | 2.5E+00 | 2.0E+00 |
| STYRENE | 100-42-5 | ppbv | | 1.4E+00 | 1.4E+00 | 1.6E+00 | 6.1E+00 | 7.5E+00 | 3.6E+00 |
| Tetrachloroethene (PCE) | 127-18-4 | ppbv | 1.3E+00 | 4.4E-01 | 4.1E+02 | 3.2E+02 | 3.4E+02 | 3.4E+02 | 2.4E+02 |
| TOLUENE | 108-88-3 | ppbv | 8.0E-01 | 5.3E-01 | 8.0E-01 | 5.3E-01 | 2.1E+00 | 2.4E+00 | 1.2E+00 |
| TRANS-1,2-DICHLOROETHENE | 156-60-5 | ppbv | 2.0E+00 | 5.0E-01 | 1.0E+00 | 7.6E-01 | 2.0E+00 | 2.5E+00 | 1.5E+00 |
| TRANS-1,3-DICHLOROPROPENE | 10061-02-6 | ppbv | 2.2E+00 | 1.1E+00 | 1.1E+00 | 1.1E+00 | 4.0E+00 | 5.1E+00 | 2.4E+00 |
| Trichloroethene (TCE) | 79-01-6 | ppbv | 2.0E+00 | 5.6E-01 | 1.5E+02 | 9.7E+01 | 1.5E+02 | 1.2E+02 | 8.7E+01 |
| VINYL ACETATE | 108-05-4 | ppbv | 1.1E+01 | 2.0E+00 | 2.0E+00 | 2.3E+00 | 8.0E+00 | 9.9E+00 | 5.8E+00 |
| VINYL CHLORIDE | 75-01-4 | ppbv | 2.0E+00 | 3.9E-01 | 3.9E-01 | 3.9E-01 | 2.0E+00 | 2.3E+00 | 1.2E+00 |

**Omega Chemical Site**
**Full Scale On Site Soils Remedy**
**Preliminary Design Report**
**Influent Estimate Detail for Well:** VE-6S
**Basis for Estimated Concentrations:** VE-6S

Performed by JTB Date 10/2/2012
Checked by IL Date 10/10/2012

See Notes on Summary Tab

| Average of NumericResult2 | | | SampleLocation | SampBegDepth | SampEndDepth | Date | | | |
|---|---|---|---|---|---|---|---|---|---|
| | | | VE-6S (blank) (blank) | | | | | | Overall Average |
| Parameter | CAS | Units2 | 1/16/2012 11:49 | 2/20/2012 13:32 | 3/26/2012 16:43 | 4/23/2012 16:33 | 5/15/2012 9:53 | 6/5/2012 12:58 | |
| 1,1,1-Trichloroethane (TCA) | 71-55-6 | ppbv | 2.0E+00 | 5.5E-01 | 5.5E-01 | 5.5E-01 | 7.3E-01 | 2.6E+00 | 1.2E+00 |
| 1,1,2,2-TETRACHLOROETHANE | 79-34-5 | ppbv | | 1.0E+00 | 1.0E+00 | 1.0E+00 | 1.0E+00 | 5.0E+00 | 1.8E+00 |
| 1,1,2-TRICHLOROETHANE | 79-00-5 | ppbv | 2.0E+00 | 5.5E-01 | 1.1E+00 | 9.2E-01 | 1.1E+00 | 2.6E+00 | 1.4E+00 |
| 1,1-DICHLOROETHANE | 75-34-3 | ppbv | 2.0E+00 | 4.9E-01 | 1.7E+00 | 1.5E+00 | 2.0E+00 | 2.5E+00 | 1.7E+00 |
| 1,1-DICHLOROETHENE | 75-35-4 | ppbv | 2.0E+00 | 5.0E-01 | 1.3E+02 | 1.2E+02 | 1.6E+02 | 1.3E+02 | 9.1E+01 |
| 1,2,4-TRICHLOROBENZENE | 120-82-1 | ppbv | | 2.0E+00 | 2.0E+00 | 2.0E+00 | 2.0E+00 | 1.0E+01 | 3.6E+00 |
| 1,2,4-TRIMETHYLBENZENE | 95-63-6 | ppbv | | 1.4E+00 | 4.5E+00 | 1.4E+00 | 1.4E+00 | 7.5E+00 | 3.3E+00 |
| 1,2-Dibromoethane (EDB) | 106-93-4 | ppbv | 2.1E+00 | 5.2E-01 | 5.2E-01 | 5.2E-01 | 5.2E-01 | 2.5E+00 | 1.1E+00 |
| 1,2-DICHLOROBENZENE | 95-50-1 | ppbv | | 5.0E-01 | 5.0E-01 | 5.0E-01 | 5.0E-01 | 2.5E+00 | 9.0E-01 |
| 1,2-DICHLOROETHANE | 107-06-2 | ppbv | 2.0E+00 | 4.9E-01 | 4.9E-01 | 4.9E-01 | 4.9E-01 | 2.5E+00 | 1.1E+00 |
| 1,2-DICHLOROPROPANE | 78-87-5 | ppbv | 1.9E+00 | 4.3E-01 | 4.3E-01 | 4.3E-01 | 4.3E-01 | 2.6E+00 | 1.0E+00 |
| 1,2-Dichlorotetrafluoroethane | 76-14-2 | ppbv | 2.0E+00 | 2.0E+00 | 2.0E+00 | 2.0E+00 | 2.0E+00 | 1.0E+01 | 3.3E+00 |
| 1,3,5-TRIMETHYLBENZENE | 108-67-8 | ppbv | | 6.1E-01 | 1.4E+00 | 6.1E-01 | 6.1E-01 | 2.4E+00 | 1.1E+00 |
| 1,3-DICHLOROBENZENE | 541-73-1 | ppbv | | 5.0E-01 | 5.0E-01 | 5.0E-01 | 5.0E-01 | 2.5E+00 | 9.0E-01 |
| 1,4-DICHLOROBENZENE | 106-46-7 | ppbv | | 5.0E-01 | 5.0E-01 | 5.0E-01 | 5.0E-01 | 2.5E+00 | 9.0E-01 |
| 1,4-DIOXANE | 123-91-1 | ppbv | 1.0E+01 | 1.0E+01 | 1.0E+01 | 1.0E+01 | 1.0E+01 | 5.0E+01 | 1.7E+01 |
| 2-HEXANONE | 591-78-6 | ppbv | 2.0E+00 | 1.5E+00 | 1.5E+00 | 1.5E+00 | 1.5E+00 | 7.6E+00 | 2.6E+00 |
| 4-ETHYLTOLUENE | 622-96-8 | ppbv | | 6.1E-01 | 1.0E+00 | 6.1E-01 | 6.1E-01 | 2.4E+00 | 1.1E+00 |
| ACETONE | 67-64-1 | ppbv | 1.7E+01 | 2.9E+01 | 8.4E+00 | 2.9E+00 | 3.8E+00 | 1.0E+01 | 1.2E+01 |
| BENZENE | 71-43-2 | ppbv | 6.3E-01 | 9.4E-01 | 6.3E-01 | 6.3E-01 | 6.3E-01 | 2.5E+00 | 9.9E-01 |
| BENZYL CHLORIDE | 100-44-7 | ppbv | | 1.5E+00 | 1.5E+00 | 1.5E+00 | 1.5E+00 | 7.5E+00 | 2.7E+00 |
| BROMODICHLOROMETHANE | 75-27-4 | ppbv | 2.1E+00 | 4.5E-01 | 4.5E-01 | 4.5E-01 | 4.5E-01 | 2.5E+00 | 1.1E+00 |
| BROMOFORM | 75-25-2 | ppbv | | 4.8E-01 | 4.8E-01 | 4.8E-01 | 4.8E-01 | 2.5E+00 | 8.9E-01 |
| BROMOMETHANE | 74-83-9 | ppbv | 2.1E+00 | 5.2E-01 | 5.2E-01 | 5.2E-01 | 5.2E-01 | 2.6E+00 | 1.1E+00 |
| CARBON DISULFIDE | 75-15-0 | ppbv | 1.0E+01 | 1.9E+00 | 1.9E+00 | 1.9E+00 | 1.9E+00 | 1.0E+01 | 4.6E+00 |
| CARBON TETRACHLORIDE | 56-23-5 | ppbv | 2.1E+00 | 4.8E-01 | 4.8E-01 | 4.8E-01 | 4.8E-01 | 2.5E+00 | 1.1E+00 |
| CHLOROBENZENE | 108-90-7 | ppbv | 2.0E+00 | 4.3E-01 | 4.3E-01 | 4.3E-01 | 4.3E-01 | 2.6E+00 | 1.0E+00 |
| CHLOROETHANE | 75-00-3 | ppbv | 1.9E+00 | 3.8E-01 | 3.8E-01 | 3.8E-01 | 3.8E-01 | 2.7E+00 | 1.0E+00 |
| CHLOROFORM | 67-66-3 | ppbv | 2.0E+00 | 4.1E-01 | 1.2E+00 | 1.0E+00 | 1.2E+00 | 2.5E+00 | 1.4E+00 |
| CHLOROMETHANE | 74-87-3 | ppbv | 3.9E+00 | 4.8E-01 | 4.8E-01 | 4.8E-01 | 4.8E-01 | 2.4E+00 | 1.4E+00 |
| CIS-1,2-DICHLOROETHENE | 156-59-2 | ppbv | 2.0E+00 | 5.0E-01 | 5.0E-01 | 5.0E-01 | 5.0E-01 | 2.5E+00 | 1.1E+00 |
| CIS-1,3-DICHLOROPROPENE | 10061-01-5 | ppbv | 2.0E+00 | 4.4E-01 | 4.4E-01 | 4.4E-01 | 4.4E-01 | 2.4E+00 | 1.0E+00 |
| DIBROMOCHLOROMETHANE | 124-48-1 | ppbv | 2.0E+00 | 4.7E-01 | 4.7E-01 | 4.7E-01 | 4.7E-01 | 2.5E+00 | 1.1E+00 |
| ETHYLBENZENE | 100-41-4 | ppbv | 2.1E+00 | 4.6E-01 | 4.6E-01 | 4.6E-01 | 4.6E-01 | 2.5E+00 | 1.1E+00 |
| Freon 11 | 75-69-4 | ppbv | 2.0E+00 | 1.1E+00 | 1.6E+01 | 9.8E+00 | 1.4E+01 | 1.1E+01 | 9.0E+00 |
| Freon 113 | 76-13-1 | ppbv | 2.0E+00 | 1.4E+00 | 2.7E+01 | 2.2E+01 | 3.5E+01 | 2.0E+01 | 1.8E+01 |
| Freon 12 | 75-71-8 | ppbv | 6.1E-01 | 6.1E-01 | 6.1E-01 | 6.1E-01 | 6.1E-01 | 2.4E+00 | 9.1E-01 |
| HEXACHLOROBUTADIENE | 87-68-3 | ppbv | | 1.5E+00 | 1.5E+00 | 1.5E+00 | 1.5E+00 | 7.5E+00 | 2.7E+00 |
| HEXANE (N-HEXANE) | 110-54-3 | ppbv | 1.0E+01 | 2.0E+00 | 2.0E+00 | 2.0E+00 | 2.0E+00 | 9.9E+00 | 4.7E+00 |
| ISOPROPYL ALCOHOL (ISOPROPANOL) | 67-63-0 | ppbv | 1.0E+01 | 9.4E+00 | 4.9E+00 | 4.9E+00 | 4.9E+00 | 2.5E+01 | 9.8E+00 |
| m,p-Xylene | 1330-20-7 | ppbv | 2.1E+00 | 2.1E+00 | 2.1E+00 | 2.1E+00 | 2.1E+00 | 9.9E+00 | 3.4E+00 |
| Methyl ethyl ketone | 78-93-3 | ppbv | 2.0E+00 | 1.4E+00 | 1.7E+00 | 1.4E+00 | 1.4E+00 | 7.5E+00 | 2.5E+00 |
| METHYL ISOBUTYL KETONE | 108-10-1 | ppbv | 2.0E+00 | 1.5E+00 | 1.5E+00 | 1.5E+00 | 1.5E+00 | 7.6E+00 | 2.6E+00 |
| METHYL TERT-BUTYL ETHER | 1634-04-4 | ppbv | 1.9E+00 | 1.9E+00 | 1.9E+00 | 1.9E+00 | 1.9E+00 | 1.0E+01 | 3.3E+00 |
| METHYLENE CHLORIDE | 75-09-2 | ppbv | 2.0E+00 | 4.9E+00 | 4.9E+00 | 4.9E+00 | 4.9E+00 | 2.5E+01 | 7.8E+00 |
| O-XYLENE | 95-47-6 | ppbv | 2.1E+00 | 4.6E-01 | 6.9E-01 | 4.6E-01 | 4.6E-01 | 2.5E+00 | 1.1E+00 |
| STYRENE | 100-42-5 | ppbv | | 1.4E+00 | 1.4E+00 | 1.4E+00 | 1.4E+00 | 7.5E+00 | 2.6E+00 |
| Tetrachloroethene (PCE) | 127-18-4 | ppbv | 2.1E+00 | 4.4E-01 | 3.5E+02 | 3.5E+02 | 3.4E+02 | 3.7E+02 | 2.4E+02 |
| TOLUENE | 108-88-3 | ppbv | 5.3E-01 | 2.7E+00 | 5.3E-01 | 5.3E-01 | 5.3E-01 | 2.4E+00 | 1.2E+00 |
| TRANS-1,2-DICHLOROETHENE | 156-60-5 | ppbv | 2.0E+00 | 5.0E-01 | 5.0E-01 | 5.0E-01 | 5.0E-01 | 2.5E+00 | 1.1E+00 |
| TRANS-1,3-DICHLOROPROPENE | 10061-02-6 | ppbv | 2.0E+00 | 1.1E+00 | 1.1E+00 | 1.1E+00 | 1.1E+00 | 5.1E+00 | 1.9E+00 |
| Trichloroethene (TCE) | 79-01-6 | ppbv | 2.0E+00 | 5.6E-01 | 1.4E+02 | 1.2E+02 | 1.5E+02 | 1.5E+02 | 9.4E+01 |
| VINYL ACETATE | 108-05-4 | ppbv | 1.0E+01 | 2.0E+00 | 2.0E+00 | 2.0E+00 | 2.0E+00 | 9.9E+00 | 4.7E+00 |
| VINYL CHLORIDE | 75-01-4 | ppbv | 2.0E+00 | 3.9E-01 | 3.9E-01 | 3.9E-01 | 3.9E-01 | 2.3E+00 | 9.8E-01 |

**Omega Chemical Site**
**Full Scale On Site Soils Remedy**
**Preliminary Design Report**
**Influent Estimate Detail for Well:** VE-8S
**Basis for Estimated Concentrations:** VE-8S

Performed by JTB Date 10/2/2012
Checked by IL Date 10/10/2012

See Notes on Summary Tab

| Average of NumericResult2 | | | SampleLocation | SampBegDepth | SampEndDepth | Date | | | |
|---|---|---|---|---|---|---|---|---|---|
| | | | VE-8S (blank) (blank) | | | | | | Overall Average |
| Parameter | CAS | Units2 | 1/16/2012 11:47 | 2/20/2012 13:33 | 3/26/2012 16:53 | 4/23/2012 16:36 | 5/15/2012 9:58 | 6/5/2012 13:03 | |
| 1,1,1-Trichloroethane (TCA) | 71-55-6 | ppbv | 2.0E+00 | 6.4E+01 | 7.0E+01 | 9.7E+01 | 1.5E+02 | 1.2E+02 | 8.5E+01 |
| 1,1,2,2-TETRACHLOROETHANE | 79-34-5 | ppbv | | 2.0E+01 | 2.0E+01 | 2.0E+01 | 3.9E+01 | 3.9E+01 | 2.8E+01 |
| 1,1,2-TRICHLOROETHANE | 79-00-5 | ppbv | 2.0E+00 | 1.0E+01 | 1.0E+01 | 1.0E+01 | 2.0E+01 | 2.0E+01 | 1.2E+01 |
| 1,1-DICHLOROETHANE | 75-34-3 | ppbv | 2.0E+00 | 9.9E+00 | 9.9E+00 | 9.9E+00 | 2.0E+01 | 2.0E+01 | 1.2E+01 |
| 1,1-DICHLOROETHENE | 75-35-4 | ppbv | 2.0E+00 | 5.8E+01 | 7.8E+01 | 7.6E+01 | 7.8E+01 | 7.6E+01 | 6.1E+01 |
| 1,2,4-TRICHLOROBENZENE | 120-82-1 | ppbv | | 4.0E+01 | 4.0E+01 | 4.0E+01 | 7.9E+01 | 7.9E+01 | 5.6E+01 |
| 1,2,4-TRIMETHYLBENZENE | 95-63-6 | ppbv | | 3.1E+01 | 3.1E+01 | 3.1E+01 | 5.9E+01 | 5.9E+01 | 4.2E+01 |
| 1,2-Dibromoethane (EDB) | 106-93-4 | ppbv | 2.1E+00 | 1.0E+01 | 1.0E+01 | 1.0E+01 | 2.0E+01 | 2.0E+01 | 1.2E+01 |
| 1,2-DICHLOROBENZENE | 95-50-1 | ppbv | | 1.0E+01 | 1.0E+01 | 1.0E+01 | 2.0E+01 | 2.0E+01 | 1.4E+01 |
| 1,2-DICHLOROETHANE | 107-06-2 | ppbv | 2.0E+00 | 5.9E+01 | 5.7E+01 | 4.7E+01 | 4.9E+01 | 4.4E+01 | 4.3E+01 |
| 1,2-DICHLOROPROPANE | 78-87-5 | ppbv | 2.2E+00 | 1.0E+01 | 1.0E+01 | 1.0E+01 | 2.0E+01 | 2.0E+01 | 1.2E+01 |
| 1,2-Dichlorotetrafluoroethane | 76-14-2 | ppbv | 2.0E+00 | 4.0E+01 | 4.0E+01 | 4.0E+01 | 8.0E+01 | 8.0E+01 | 4.7E+01 |
| 1,3,5-TRIMETHYLBENZENE | 108-67-8 | ppbv | | 1.0E+01 | 1.0E+01 | 1.0E+01 | 2.0E+01 | 2.0E+01 | 1.4E+01 |
| 1,3-DICHLOROBENZENE | 541-73-1 | ppbv | | 1.0E+01 | 1.0E+01 | 1.0E+01 | 2.0E+01 | 2.0E+01 | 1.4E+01 |
| 1,4-DICHLOROBENZENE | 106-46-7 | ppbv | | 1.0E+01 | 1.0E+01 | 1.0E+01 | 2.0E+01 | 2.0E+01 | 1.4E+01 |
| 1,4-DIOXANE | 123-91-1 | ppbv | 1.0E+01 | 2.0E+02 | 2.0E+02 | 2.0E+02 | 3.9E+02 | 3.9E+02 | 2.3E+02 |
| 2-HEXANONE | 591-78-6 | ppbv | 2.2E+00 | 2.9E+01 | 2.9E+01 | 2.9E+01 | 6.1E+01 | 6.1E+01 | 3.5E+01 |
| 4-ETHYLTOLUENE | 622-96-8 | ppbv | | 1.0E+01 | 1.0E+01 | 1.0E+01 | 2.0E+01 | 2.0E+01 | 1.4E+01 |
| ACETONE | 67-64-1 | ppbv | 6.7E+00 | 4.0E+01 | 4.0E+01 | 4.0E+01 | 8.0E+01 | 8.0E+01 | 4.8E+01 |
| BENZENE | 71-43-2 | ppbv | 6.3E-01 | 1.0E+01 | 1.0E+01 | 1.0E+01 | 2.0E+01 | 2.0E+01 | 1.2E+01 |
| BENZYL CHLORIDE | 100-44-7 | ppbv | | 3.1E+01 | 3.1E+01 | 3.1E+01 | 6.0E+01 | 6.0E+01 | 4.2E+01 |
| BROMODICHLOROMETHANE | 75-27-4 | ppbv | 2.1E+00 | 1.0E+01 | 1.0E+01 | 1.0E+01 | 1.9E+01 | 1.9E+01 | 1.2E+01 |
| BROMOFORM | 75-25-2 | ppbv | | 9.7E+00 | 9.7E+00 | 9.7E+00 | 2.0E+01 | 2.0E+01 | 1.4E+01 |
| BROMOMETHANE | 74-83-9 | ppbv | 2.1E+00 | 1.0E+01 | 1.0E+01 | 1.0E+01 | 2.0E+01 | 2.0E+01 | 1.2E+01 |
| CARBON DISULFIDE | 75-15-0 | ppbv | 1.0E+01 | 3.9E+01 | 3.9E+01 | 3.9E+01 | 8.0E+01 | 8.0E+01 | 4.8E+01 |
| CARBON TETRACHLORIDE | 56-23-5 | ppbv | 2.1E+00 | 1.0E+01 | 1.0E+01 | 1.0E+01 | 2.1E+01 | 2.1E+01 | 1.2E+01 |
| CHLOROBENZENE | 108-90-7 | ppbv | 2.2E+00 | 1.0E+01 | 1.0E+01 | 1.0E+01 | 2.0E+01 | 2.0E+01 | 1.2E+01 |
| CHLOROETHANE | 75-00-3 | ppbv | 1.9E+00 | 9.9E+00 | 9.9E+00 | 9.9E+00 | 2.0E+01 | 2.0E+01 | 1.2E+01 |
| CHLOROFORM | 67-66-3 | ppbv | 2.0E+00 | 1.0E+01 | 1.0E+01 | 1.0E+01 | 2.0E+01 | 2.0E+01 | 1.2E+01 |
| CHLOROMETHANE | 74-87-3 | ppbv | 4.4E+00 | 1.0E+01 | 1.0E+01 | 1.0E+01 | 2.0E+01 | 2.0E+01 | 1.2E+01 |
| CIS-1,2-DICHLOROETHENE | 156-59-2 | ppbv | 2.0E+00 | 1.0E+01 | 1.0E+01 | 1.0E+01 | 2.0E+01 | 2.0E+01 | 1.2E+01 |
| CIS-1,3-DICHLOROPROPENE | 10061-01-5 | ppbv | 2.0E+00 | 9.9E+00 | 9.9E+00 | 9.9E+00 | 2.0E+01 | 2.0E+01 | 1.2E+01 |
| DIBROMOCHLOROMETHANE | 124-48-1 | ppbv | 2.1E+00 | 1.0E+01 | 1.0E+01 | 1.0E+01 | 2.0E+01 | 2.0E+01 | 1.2E+01 |
| ETHYLBENZENE | 100-41-4 | ppbv | 2.1E+00 | 9.9E+00 | 9.9E+00 | 9.9E+00 | 2.0E+01 | 2.0E+01 | 1.2E+01 |
| Freon 11 | 75-69-4 | ppbv | 2.1E+00 | 2.0E+01 | 2.0E+01 | 2.0E+01 | 3.9E+01 | 3.9E+01 | 2.3E+01 |
| Freon 113 | 76-13-1 | ppbv | 2.1E+00 | 9.1E+01 | 9.7E+01 | 1.1E+02 | 2.2E+02 | 1.0E+02 | 1.0E+02 |
| Freon 12 | 75-71-8 | ppbv | 6.1E-01 | 9.9E+00 | 9.9E+00 | 9.9E+00 | 2.0E+01 | 2.0E+01 | 1.2E+01 |
| HEXACHLOROBUTADIENE | 87-68-3 | ppbv | | 3.0E+01 | 3.0E+01 | 3.0E+01 | 6.0E+01 | 6.0E+01 | 4.2E+01 |
| HEXANE (N-HEXANE) | 110-54-3 | ppbv | 1.0E+01 | 4.0E+01 | 4.0E+01 | 4.0E+01 | 7.9E+01 | 7.9E+01 | 4.8E+01 |
| ISOPROPYL ALCOHOL (ISOPROPANOL) | 67-63-0 | ppbv | 1.0E+01 | 1.0E+02 | 1.0E+02 | 1.0E+02 | 2.0E+02 | 2.0E+02 | 1.2E+02 |
| m,p-Xylene | 1330-20-7 | ppbv | 4.6E-01 | 3.9E+01 | 3.9E+01 | 3.9E+01 | 8.1E+01 | 8.1E+01 | 4.7E+01 |
| Methyl ethyl ketone | 78-93-3 | ppbv | 2.0E+00 | 3.0E+01 | 3.0E+01 | 3.0E+01 | 6.1E+01 | 6.1E+01 | 3.6E+01 |
| METHYL ISOBUTYL KETONE | 108-10-1 | ppbv | 2.2E+00 | 2.9E+01 | 2.9E+01 | 2.9E+01 | 6.1E+01 | 6.1E+01 | 3.5E+01 |
| METHYL TERT-BUTYL ETHER | 1634-04-4 | ppbv | 1.9E+00 | 3.9E+01 | 3.9E+01 | 3.9E+01 | 8.0E+01 | 8.0E+01 | 4.7E+01 |
| METHYLENE CHLORIDE | 75-09-2 | ppbv | 2.0E+00 | 1.0E+02 | 1.0E+02 | 1.0E+02 | 2.0E+02 | 2.0E+02 | 1.2E+02 |
| O-XYLENE | 95-47-6 | ppbv | 2.1E+00 | 9.9E+00 | 9.9E+00 | 9.9E+00 | 2.0E+01 | 2.0E+01 | 1.2E+01 |
| STYRENE | 100-42-5 | ppbv | | 3.1E+01 | 3.1E+01 | 3.1E+01 | 6.1E+01 | 6.1E+01 | 4.3E+01 |
| Tetrachloroethene (PCE) | 127-18-4 | ppbv | 2.1E+00 | 2.2E+04 | 3.5E+04 | 5.3E+04 | 1.9E+04 | 3.2E+04 | 2.7E+04 |
| TOLUENE | 108-88-3 | ppbv | 8.0E-01 | 1.0E+01 | 1.0E+01 | 1.0E+01 | 2.0E+01 | 2.0E+01 | 1.2E+01 |
| TRANS-1,2-DICHLOROETHENE | 156-60-5 | ppbv | 2.0E+00 | 1.0E+01 | 1.0E+01 | 1.0E+01 | 2.0E+01 | 2.0E+01 | 1.2E+01 |
| TRANS-1,3-DICHLOROPROPENE | 10061-02-6 | ppbv | 2.0E+00 | 2.0E+01 | 2.0E+01 | 2.0E+01 | 4.0E+01 | 4.0E+01 | 2.4E+01 |
| Trichloroethene (TCE) | 79-01-6 | ppbv | 2.0E+00 | 1.0E+02 | 1.2E+02 | 1.1E+02 | 1.2E+02 | 1.1E+02 | 9.2E+01 |
| VINYL ACETATE | 108-05-4 | ppbv | 1.0E+01 | 4.0E+01 | 4.0E+01 | 4.0E+01 | 8.0E+01 | 8.0E+01 | 4.8E+01 |
| VINYL CHLORIDE | 75-01-4 | ppbv | 2.0E+00 | 1.0E+01 | 1.0E+01 | 1.0E+01 | 2.0E+01 | 2.0E+01 | 1.2E+01 |

**Omega Chemical Site**
**Full Scale On Site Soils Remedy**
**Preliminary Design Report**
**Influent Estimate Detail for Well:** VE-9S
**Basis for Estimated Concentrations:** VE-9S

Performed by JTB Date 10/2/2012
Checked by IL Date 10/10/2012

See Notes on Summary Tab

| Average of NumericResult2 | | | SampleLocation | SampBegDepth | SampEndDepth | Date | | | |
|---|---|---|---|---|---|---|---|---|---|
| | | | VE-9S (blank) (blank) | | | | | | Overall Average |
| Parameter | CAS | Units2 | 1/16/2012 11:46 | 2/20/2012 13:34 | 3/26/2012 17:03 | 4/23/2012 16:39 | 5/15/2012 10:03 | 6/5/2012 13:08 | |
| 1,1,1-Trichloroethane (TCA) | 71-55-6 | ppbv | 2.0E+00 | 5.5E-01 | 5.5E-01 | 5.5E-01 | 4.0E+00 | 2.6E+00 | 1.7E+00 |
| 1,1,2,2-TETRACHLOROETHANE | 79-34-5 | ppbv | | 1.0E+00 | 1.0E+00 | 1.2E+00 | 8.0E+00 | 5.0E+00 | 3.2E+00 |
| 1,1,2-TRICHLOROETHANE | 79-00-5 | ppbv | 2.0E+00 | 5.5E-01 | 5.5E-01 | 5.5E-01 | 4.0E+00 | 2.6E+00 | 1.7E+00 |
| 1,1-DICHLOROETHANE | 75-34-3 | ppbv | 2.0E+00 | 4.9E-01 | 2.5E+00 | 2.5E+00 | 4.0E+00 | 2.5E+00 | 2.3E+00 |
| 1,1-DICHLOROETHENE | 75-35-4 | ppbv | 5.0E-01 | 5.0E-01 | 3.0E+02 | 2.5E+02 | 2.2E+02 | 2.1E+02 | 1.6E+02 |
| 1,2,4-TRICHLOROBENZENE | 120-82-1 | ppbv | | 2.0E+00 | 2.0E+00 | 2.2E+00 | 1.6E+01 | 1.0E+01 | 6.5E+00 |
| 1,2,4-TRIMETHYLBENZENE | 95-63-6 | ppbv | | 1.4E+00 | 1.4E+00 | 1.6E+00 | 1.2E+01 | 7.5E+00 | 4.8E+00 |
| 1,2-Dibromoethane (EDB) | 106-93-4 | ppbv | 2.1E+00 | 5.2E-01 | 5.2E-01 | 5.2E-01 | 4.0E+00 | 2.5E+00 | 1.7E+00 |
| 1,2-DICHLOROBENZENE | 95-50-1 | ppbv | | 5.0E-01 | 5.0E-01 | 5.0E-01 | 4.0E+00 | 2.5E+00 | 1.6E+00 |
| 1,2-DICHLOROETHANE | 107-06-2 | ppbv | 2.0E+00 | 4.9E-01 | 2.5E+00 | 2.2E+00 | 4.0E+00 | 2.5E+00 | 2.3E+00 |
| 1,2-DICHLOROPROPANE | 78-87-5 | ppbv | 1.9E+00 | 4.3E-01 | 4.3E-01 | 6.5E-01 | 3.9E+00 | 2.6E+00 | 1.7E+00 |
| 1,2-Dichlorotetrafluoroethane | 76-14-2 | ppbv | 2.0E+00 | 2.0E+00 | 2.0E+00 | 2.3E+00 | 1.6E+01 | 1.0E+01 | 5.7E+00 |
| 1,3,5-TRIMETHYLBENZENE | 108-67-8 | ppbv | | 6.1E-01 | 6.1E-01 | 6.1E-01 | 4.1E+00 | 2.4E+00 | 1.7E+00 |
| 1,3-DICHLOROBENZENE | 541-73-1 | ppbv | | 5.0E-01 | 5.0E-01 | 5.0E-01 | 4.0E+00 | 2.5E+00 | 1.6E+00 |
| 1,4-DICHLOROBENZENE | 106-46-7 | ppbv | | 5.0E-01 | 5.0E-01 | 5.0E-01 | 4.0E+00 | 2.5E+00 | 1.6E+00 |
| 1,4-DIOXANE | 123-91-1 | ppbv | 1.0E+01 | 1.0E+01 | 1.0E+01 | 1.1E+01 | 8.0E+01 | 5.0E+01 | 2.9E+01 |
| 2-HEXANONE | 591-78-6 | ppbv | 2.0E+00 | 1.5E+00 | 1.5E+00 | 1.7E+00 | 1.2E+01 | 7.6E+00 | 4.4E+00 |
| 4-ETHYLTOLUENE | 622-96-8 | ppbv | | 6.1E-01 | 6.1E-01 | 6.1E-01 | 4.1E+00 | 2.4E+00 | 1.7E+00 |
| ACETONE | 67-64-1 | ppbv | 8.4E+00 | 1.3E+01 | 1.9E+01 | 2.5E+00 | 1.6E+01 | 1.2E+01 | 1.2E+01 |
| BENZENE | 71-43-2 | ppbv | 6.3E-01 | 6.3E-01 | 6.3E-01 | 6.3E-01 | 4.1E+00 | 2.5E+00 | 1.5E+00 |
| BENZYL CHLORIDE | 100-44-7 | ppbv | | 1.5E+00 | 1.5E+00 | 1.7E+00 | 1.2E+01 | 7.5E+00 | 4.9E+00 |
| BROMODICHLOROMETHANE | 75-27-4 | ppbv | 2.1E+00 | 4.5E-01 | 4.5E-01 | 6.0E-01 | 4.0E+00 | 2.5E+00 | 1.7E+00 |
| BROMOFORM | 75-25-2 | ppbv | | 4.8E-01 | 4.8E-01 | 5.8E-01 | 4.0E+00 | 2.5E+00 | 1.6E+00 |
| BROMOMETHANE | 74-83-9 | ppbv | 2.1E+00 | 5.2E-01 | 5.2E-01 | 5.2E-01 | 4.1E+00 | 2.6E+00 | 1.7E+00 |
| CARBON DISULFIDE | 75-15-0 | ppbv | 1.0E+01 | 1.9E+00 | 1.9E+00 | 2.2E+00 | 1.6E+01 | 1.0E+01 | 7.0E+00 |
| CARBON TETRACHLORIDE | 56-23-5 | ppbv | 2.1E+00 | 4.8E-01 | 4.8E-01 | 6.4E-01 | 4.0E+00 | 2.5E+00 | 1.7E+00 |
| CHLOROBENZENE | 108-90-7 | ppbv | 2.0E+00 | 4.3E-01 | 4.3E-01 | 6.5E-01 | 3.9E+00 | 2.6E+00 | 1.7E+00 |
| CHLOROETHANE | 75-00-3 | ppbv | 1.9E+00 | 3.8E-01 | 3.8E-01 | 7.6E-01 | 4.2E+00 | 2.7E+00 | 1.7E+00 |
| CHLOROFORM | 67-66-3 | ppbv | 2.0E+00 | 4.1E-01 | 1.7E+01 | 1.6E+01 | 1.5E+01 | 1.5E+01 | 1.1E+01 |
| CHLOROMETHANE | 74-87-3 | ppbv | 9.7E-01 | 4.8E-01 | 4.8E-01 | 4.8E-01 | 3.9E+00 | 2.4E+00 | 1.5E+00 |
| CIS-1,2-DICHLOROETHENE | 156-59-2 | ppbv | 2.0E+00 | 5.0E-01 | 7.6E-01 | 7.6E-01 | 4.0E+00 | 2.5E+00 | 1.8E+00 |
| CIS-1,3-DICHLOROPROPENE | 10061-01-5 | ppbv | 2.0E+00 | 4.4E-01 | 4.4E-01 | 6.6E-01 | 4.0E+00 | 2.4E+00 | 1.7E+00 |
| DIBROMOCHLOROMETHANE | 124-48-1 | ppbv | 2.0E+00 | 4.7E-01 | 4.7E-01 | 5.9E-01 | 4.0E+00 | 2.5E+00 | 1.7E+00 |
| ETHYLBENZENE | 100-41-4 | ppbv | 2.1E+00 | 4.6E-01 | 4.6E-01 | 4.6E-01 | 3.9E+00 | 2.5E+00 | 1.7E+00 |
| Freon 11 | 75-69-4 | ppbv | 2.0E+00 | 1.1E+00 | 8.7E+01 | 4.1E+01 | 3.7E+01 | 3.4E+01 | 3.4E+01 |
| Freon 113 | 76-13-1 | ppbv | 6.5E-01 | 1.4E+00 | 3.0E+02 | 1.8E+02 | 1.6E+02 | 1.4E+02 | 1.3E+02 |
| Freon 12 | 75-71-8 | ppbv | 6.1E-01 | 6.1E-01 | 1.4E+00 | 8.1E-01 | 4.0E+00 | 2.4E+00 | 1.7E+00 |
| HEXACHLOROBUTADIENE | 87-68-3 | ppbv | | 1.5E+00 | 1.5E+00 | 1.7E+00 | 1.2E+01 | 7.5E+00 | 4.9E+00 |
| HEXANE (N-HEXANE) | 110-54-3 | ppbv | 1.0E+01 | 2.0E+00 | 2.0E+00 | 2.3E+00 | 2.4E+02 | 9.9E+00 | 4.4E+01 |
| ISOPROPYL ALCOHOL (ISOPROPANOL) | 67-63-0 | ppbv | 1.0E+01 | 4.9E+00 | 4.9E+00 | 5.7E+00 | 4.0E+01 | 2.5E+01 | 1.5E+01 |
| m,p-Xylene | 1330-20-7 | ppbv | 2.1E+00 | 2.1E+00 | 2.1E+00 | 2.3E+00 | 1.6E+01 | 9.9E+00 | 5.7E+00 |
| Methyl ethyl ketone | 78-93-3 | ppbv | 2.0E+00 | 1.4E+00 | 2.0E+00 | 1.7E+00 | 1.2E+01 | 7.5E+00 | 4.4E+00 |
| METHYL ISOBUTYL KETONE | 108-10-1 | ppbv | 2.0E+00 | 1.5E+00 | 1.5E+00 | 1.7E+00 | 1.2E+01 | 7.6E+00 | 4.4E+00 |
| METHYL TERT-BUTYL ETHER | 1634-04-4 | ppbv | 1.9E+00 | 1.9E+00 | 1.9E+00 | 2.2E+00 | 1.6E+01 | 1.0E+01 | 5.7E+00 |
| METHYLENE CHLORIDE | 75-09-2 | ppbv | 2.0E+00 | 4.9E+00 | 4.9E+00 | 5.5E+00 | 4.0E+01 | 2.5E+01 | 1.4E+01 |
| O-XYLENE | 95-47-6 | ppbv | 2.1E+00 | 4.6E-01 | 4.6E-01 | 4.6E-01 | 3.9E+00 | 2.5E+00 | 1.7E+00 |
| STYRENE | 100-42-5 | ppbv | | 1.4E+00 | 1.4E+00 | 1.6E+00 | 1.2E+01 | 7.5E+00 | 4.8E+00 |
| Tetrachloroethene (PCE) | 127-18-4 | ppbv | 1.8E+00 | 9.7E+01 | 1.2E+03 | 1.1E+03 | 9.6E+02 | 9.4E+02 | 7.3E+02 |
| TOLUENE | 108-88-3 | ppbv | 8.0E-01 | 5.3E-01 | 5.3E-01 | 5.3E-01 | 4.0E+00 | 2.4E+00 | 1.5E+00 |
| TRANS-1,2-DICHLOROETHENE | 156-60-5 | ppbv | 2.0E+00 | 5.0E-01 | 1.5E+00 | 1.5E+00 | 4.0E+00 | 2.5E+00 | 2.0E+00 |
| TRANS-1,3-DICHLOROPROPENE | 10061-02-6 | ppbv | 2.0E+00 | 1.1E+00 | 1.1E+00 | 1.1E+00 | 7.9E+00 | 5.1E+00 | 3.0E+00 |
| Trichloroethene (TCE) | 79-01-6 | ppbv | 2.0E+00 | 5.6E-01 | 7.8E+01 | 7.3E+01 | 6.5E+01 | 6.5E+01 | 4.7E+01 |
| VINYL ACETATE | 108-05-4 | ppbv | 1.0E+01 | 2.0E+00 | 2.0E+00 | 2.3E+00 | 1.6E+01 | 9.9E+00 | 7.1E+00 |
| VINYL CHLORIDE | 75-01-4 | ppbv | 2.0E+00 | 3.9E-01 | 3.9E-01 | 3.9E-01 | 3.9E+00 | 2.3E+00 | 1.6E+00 |

**Omega Chemical Site**
**Full Scale On Site Soils Remedy**
**Preliminary Design Report**
**Influent Estimate Detail for Well:** VE-10S
**Basis for Estimated Concentrations:** VE-10S

Performed by JTB Date 10/2/2012
Checked by IL Date 10/10/2012

See Notes on Summary Tab

| Average of NumericResult2 | | | SampleLocation | SampBegDepth | SampEndDepth | Date | | | |
|---|---|---|---|---|---|---|---|---|---|
| | | | VE-10S (blank) (blank) | | | | | | Overall Average |
| Parameter | CAS | Units2 | 1/16/2012 12:29 | 2/20/2012 13:45 | 3/26/2012 17:08 | 4/23/2012 16:47 | 5/15/2012 10:08 | 6/5/2012 13:13 | |
| 1,1,1-Trichloroethane (TCA) | 71-55-6 | ppbv | 2.2E+00 | 5.5E-01 | 5.5E-01 | 5.5E-01 | 2.6E+00 | 2.6E+00 | 1.5E+00 |
| 1,1,2,2-TETRACHLOROETHANE | 79-34-5 | ppbv | | 1.0E+00 | 1.0E+00 | 1.2E+00 | 5.0E+00 | 5.0E+00 | 2.6E+00 |
| 1,1,2-TRICHLOROETHANE | 79-00-5 | ppbv | 2.2E+00 | 5.5E-01 | 5.5E-01 | 5.5E-01 | 2.6E+00 | 2.6E+00 | 1.5E+00 |
| 1,1-DICHLOROETHANE | 75-34-3 | ppbv | 2.2E+00 | 4.9E-01 | 1.2E+00 | 1.7E+00 | 2.5E+00 | 2.5E+00 | 1.8E+00 |
| 1,1-DICHLOROETHENE | 75-35-4 | ppbv | 2.3E+00 | 5.0E-01 | 2.8E+02 | 3.8E+02 | 3.8E+02 | 2.3E+02 | 2.1E+02 |
| 1,2,4-TRICHLOROBENZENE | 120-82-1 | ppbv | | 2.0E+00 | 2.0E+00 | 2.2E+00 | 1.0E+01 | 1.0E+01 | 5.2E+00 |
| 1,2,4-TRIMETHYLBENZENE | 95-63-6 | ppbv | | 1.4E+00 | 1.8E+00 | 1.6E+00 | 7.5E+00 | 7.5E+00 | 4.0E+00 |
| 1,2-Dibromoethane (EDB) | 106-93-4 | ppbv | 2.2E+00 | 5.2E-01 | 5.2E-01 | 5.2E-01 | 2.5E+00 | 2.5E+00 | 1.5E+00 |
| 1,2-DICHLOROBENZENE | 95-50-1 | ppbv | | 5.0E-01 | 5.0E-01 | 5.0E-01 | 2.5E+00 | 2.5E+00 | 1.3E+00 |
| 1,2-DICHLOROETHANE | 107-06-2 | ppbv | 2.2E+00 | 4.9E-01 | 4.9E-01 | 4.9E-01 | 2.5E+00 | 2.5E+00 | 1.4E+00 |
| 1,2-DICHLOROPROPANE | 78-87-5 | ppbv | 2.2E+00 | 4.3E-01 | 4.3E-01 | 6.5E-01 | 2.6E+00 | 2.6E+00 | 1.5E+00 |
| 1,2-Dichlorotetrafluoroethane | 76-14-2 | ppbv | 2.1E+00 | 2.0E+00 | 2.0E+00 | 2.1E+00 | 1.0E+01 | 1.0E+01 | 4.7E+00 |
| 1,3,5-TRIMETHYLBENZENE | 108-67-8 | ppbv | | 6.1E-01 | 6.1E-01 | 6.1E-01 | 2.4E+00 | 2.4E+00 | 1.3E+00 |
| 1,3-DICHLOROBENZENE | 541-73-1 | ppbv | | 5.0E-01 | 5.0E-01 | 5.0E-01 | 2.5E+00 | 2.5E+00 | 1.3E+00 |
| 1,4-DICHLOROBENZENE | 106-46-7 | ppbv | | 5.0E-01 | 5.0E-01 | 5.0E-01 | 2.5E+00 | 2.5E+00 | 1.3E+00 |
| 1,4-DIOXANE | 123-91-1 | ppbv | 1.1E+01 | 1.0E+01 | 1.0E+01 | 1.1E+01 | 5.0E+01 | 5.0E+01 | 2.4E+01 |
| 2-HEXANONE | 591-78-6 | ppbv | 2.2E+00 | 1.5E+00 | 1.5E+00 | 1.7E+00 | 7.6E+00 | 7.6E+00 | 3.7E+00 |
| 4-ETHYLTOLUENE | 622-96-8 | ppbv | | 6.1E-01 | 6.1E-01 | 6.1E-01 | 2.4E+00 | 2.4E+00 | 1.3E+00 |
| ACETONE | 67-64-1 | ppbv | 1.5E+01 | 4.2E+00 | 3.4E+00 | 4.2E+00 | 1.0E+01 | 1.6E+01 | 8.9E+00 |
| BENZENE | 71-43-2 | ppbv | 1.3E+00 | 6.3E-01 | 9.4E-01 | 6.3E-01 | 2.5E+00 | 2.5E+00 | 1.4E+00 |
| BENZYL CHLORIDE | 100-44-7 | ppbv | | 1.5E+00 | 1.5E+00 | 1.7E+00 | 7.5E+00 | 7.5E+00 | 4.0E+00 |
| BROMODICHLOROMETHANE | 75-27-4 | ppbv | 2.2E+00 | 4.5E-01 | 4.5E-01 | 6.0E-01 | 2.5E+00 | 2.5E+00 | 1.5E+00 |
| BROMOFORM | 75-25-2 | ppbv | | 4.8E-01 | 4.8E-01 | 5.8E-01 | 2.5E+00 | 2.5E+00 | 1.3E+00 |
| BROMOMETHANE | 74-83-9 | ppbv | 2.3E+00 | 5.2E-01 | 5.2E-01 | 5.2E-01 | 2.6E+00 | 2.6E+00 | 1.5E+00 |
| CARBON DISULFIDE | 75-15-0 | ppbv | 1.1E+01 | 1.9E+00 | 1.9E+00 | 2.2E+00 | 1.0E+01 | 1.0E+01 | 6.2E+00 |
| CARBON TETRACHLORIDE | 56-23-5 | ppbv | 2.2E+00 | 4.8E-01 | 4.8E-01 | 4.8E-01 | 2.5E+00 | 2.5E+00 | 1.5E+00 |
| CHLOROBENZENE | 108-90-7 | ppbv | 2.2E+00 | 4.3E-01 | 4.3E-01 | 6.5E-01 | 2.6E+00 | 2.6E+00 | 1.5E+00 |
| CHLOROETHANE | 75-00-3 | ppbv | 2.3E+00 | 3.8E-01 | 3.8E-01 | 3.8E-01 | 2.7E+00 | 2.7E+00 | 1.5E+00 |
| CHLOROFORM | 67-66-3 | ppbv | 2.3E+00 | 4.1E-01 | 1.1E+01 | 1.1E+01 | 1.1E+01 | 7.4E+00 | 7.2E+00 |
| CHLOROMETHANE | 74-87-3 | ppbv | 9.7E-01 | 4.8E-01 | 4.8E-01 | 4.8E-01 | 2.4E+00 | 2.4E+00 | 1.2E+00 |
| CIS-1,2-DICHLOROETHENE | 156-59-2 | ppbv | 2.3E+00 | 5.0E-01 | 7.6E-01 | 1.0E+00 | 2.5E+00 | 2.5E+00 | 1.6E+00 |
| CIS-1,3-DICHLOROPROPENE | 10061-01-5 | ppbv | 2.2E+00 | 4.4E-01 | 4.4E-01 | 6.6E-01 | 2.4E+00 | 2.4E+00 | 1.4E+00 |
| DIBROMOCHLOROMETHANE | 124-48-1 | ppbv | 2.2E+00 | 4.7E-01 | 4.7E-01 | 5.9E-01 | 2.5E+00 | 2.5E+00 | 1.4E+00 |
| ETHYLBENZENE | 100-41-4 | ppbv | 6.9E-01 | 4.6E-01 | 2.8E+00 | 4.6E-01 | 2.5E+00 | 2.5E+00 | 1.6E+00 |
| Freon 11 | 75-69-4 | ppbv | 2.1E+00 | 1.1E+00 | 1.5E+01 | 1.1E+01 | 1.7E+01 | 1.1E+01 | 9.5E+00 |
| Freon 113 | 76-13-1 | ppbv | 2.2E+00 | 1.4E+00 | 3.9E+01 | 5.5E+01 | 6.4E+01 | 4.0E+01 | 3.4E+01 |
| Freon 12 | 75-71-8 | ppbv | 6.1E-01 | 6.1E-01 | 1.4E+00 | 8.1E-01 | 2.4E+00 | 2.4E+00 | 1.4E+00 |
| HEXACHLOROBUTADIENE | 87-68-3 | ppbv | | 1.5E+00 | 1.5E+00 | 1.6E+00 | 7.5E+00 | 7.5E+00 | 3.9E+00 |
| HEXANE (N-HEXANE) | 110-54-3 | ppbv | 1.1E+01 | 2.0E+00 | 2.0E+00 | 2.3E+00 | 9.9E+00 | 9.9E+00 | 6.2E+00 |
| ISOPROPYL ALCOHOL (ISOPROPANOL) | 67-63-0 | ppbv | 1.1E+01 | 4.9E+00 | 4.9E+00 | 5.3E+00 | 2.5E+01 | 2.5E+01 | 1.3E+01 |
| m,p-Xylene | 1330-20-7 | ppbv | 3.7E+00 | 2.1E+00 | 3.5E+00 | 2.3E+00 | 9.9E+00 | 9.9E+00 | 5.2E+00 |
| Methyl ethyl ketone | 78-93-3 | ppbv | 2.4E+00 | 1.4E+00 | 1.4E+00 | 1.7E+00 | 7.5E+00 | 7.5E+00 | 3.6E+00 |
| METHYL ISOBUTYL KETONE | 108-10-1 | ppbv | 2.2E+00 | 1.5E+00 | 1.5E+00 | 1.7E+00 | 7.6E+00 | 7.6E+00 | 3.7E+00 |
| METHYL TERT-BUTYL ETHER | 1634-04-4 | ppbv | 2.2E+00 | 1.9E+00 | 1.9E+00 | 2.2E+00 | 1.0E+01 | 1.0E+01 | 4.7E+00 |
| METHYLENE CHLORIDE | 75-09-2 | ppbv | 2.3E+00 | 4.9E+00 | 4.9E+00 | 5.5E+00 | 2.5E+01 | 2.5E+01 | 1.1E+01 |
| O-XYLENE | 95-47-6 | ppbv | 1.6E+00 | 4.6E-01 | 4.6E-01 | 4.6E-01 | 2.5E+00 | 2.5E+00 | 1.3E+00 |
| STYRENE | 100-42-5 | ppbv | | 1.4E+00 | 1.4E+00 | 1.6E+00 | 7.5E+00 | 7.5E+00 | 3.9E+00 |
| Tetrachloroethene (PCE) | 127-18-4 | ppbv | 2.2E+00 | 4.4E-01 | 8.1E+02 | 1.2E+03 | 1.0E+03 | 6.5E+02 | 6.1E+02 |
| TOLUENE | 108-88-3 | ppbv | 4.0E+00 | 5.3E-01 | 5.3E-01 | 5.3E-01 | 2.4E+00 | 2.4E+00 | 1.7E+00 |
| TRANS-1,2-DICHLOROETHENE | 156-60-5 | ppbv | 2.3E+00 | 5.0E-01 | 5.0E-01 | 5.0E-01 | 2.5E+00 | 2.5E+00 | 1.5E+00 |
| TRANS-1,3-DICHLOROPROPENE | 10061-02-6 | ppbv | 2.2E+00 | 1.1E+00 | 1.1E+00 | 1.1E+00 | 5.1E+00 | 5.1E+00 | 2.6E+00 |
| Trichloroethene (TCE) | 79-01-6 | ppbv | 2.2E+00 | 5.6E-01 | 6.5E+01 | 9.3E+01 | 8.9E+01 | 5.6E+01 | 5.1E+01 |
| VINYL ACETATE | 108-05-4 | ppbv | 1.1E+01 | 2.0E+00 | 2.0E+00 | 2.3E+00 | 9.9E+00 | 9.9E+00 | 6.2E+00 |
| VINYL CHLORIDE | 75-01-4 | ppbv | 2.3E+00 | 3.9E-01 | 3.9E-01 | 3.9E-01 | 2.3E+00 | 2.3E+00 | 1.4E+00 |

**Omega Chemical Site**
**Full Scale On Site Soils Remedy**
**Preliminary Design Report**
**Influent Estimate Detail for Well:** **VE-11S**
**Basis for Estimated Concentrations:** **VE-11S**

Performed by JTB Date 10/2/2012
Checked by IL Date 10/10/2012

See Notes on Summary Tab

| Average of NumericResult2 | | | SampleLocation | SampBegDepth | SampEndDepth | Date | | | |
|---|---|---|---|---|---|---|---|---|---|
| | | | VE-11S (blank) (blank) | | | | | | Overall Average |
| Parameter | CAS | Units2 | 1/16/2012 12:28 | 2/20/2012 13:46 | 3/26/2012 16:58 | 4/23/2012 16:50 | 5/15/2012 10:13 | 6/5/2012 13:18 | |
| 1,1,1-Trichloroethane (TCA) | 71-55-6 | ppbv | 2.0E+00 | 5.5E-01 | 4.9E+00 | 1.3E+00 | 2.6E+00 | 4.9E+00 | 2.7E+00 |
| 1,1,2,2-TETRACHLOROETHANE | 79-34-5 | ppbv | | 1.0E+00 | 1.0E+01 | 1.2E+00 | 5.0E+00 | 1.0E+01 | 5.4E+00 |
| 1,1,2-TRICHLOROETHANE | 79-00-5 | ppbv | 5.5E-01 | 5.5E-01 | 6.2E+00 | 7.1E+00 | 2.7E+00 | 5.1E+00 | 3.7E+00 |
| 1,1-DICHLOROETHANE | 75-34-3 | ppbv | 9.9E-01 | 4.9E-01 | 8.9E+00 | 1.0E+01 | 3.7E+00 | 7.9E+00 | 5.4E+00 |
| 1,1-DICHLOROETHENE | 75-35-4 | ppbv | 6.3E+01 | 5.0E-01 | 7.1E+02 | 8.6E+02 | 4.0E+02 | 6.8E+02 | 4.5E+02 |
| 1,2,4-TRICHLOROBENZENE | 120-82-1 | ppbv | | 2.0E+00 | 2.0E+01 | 2.2E+00 | 1.0E+01 | 2.0E+01 | 1.1E+01 |
| 1,2,4-TRIMETHYLBENZENE | 95-63-6 | ppbv | | 1.4E+00 | 1.5E+01 | 1.6E+00 | 7.5E+00 | 1.5E+01 | 8.1E+00 |
| 1,2-Dibromoethane (EDB) | 106-93-4 | ppbv | 2.1E+00 | 5.2E-01 | 4.9E+00 | 5.2E-01 | 2.5E+00 | 4.9E+00 | 2.6E+00 |
| 1,2-DICHLOROBENZENE | 95-50-1 | ppbv | | 5.0E-01 | 5.0E+00 | 5.0E-01 | 2.5E+00 | 5.0E+00 | 2.7E+00 |
| 1,2-DICHLOROETHANE | 107-06-2 | ppbv | 3.7E+00 | 4.9E-01 | 3.0E+01 | 3.2E+01 | 1.5E+01 | 2.7E+01 | 1.8E+01 |
| 1,2-DICHLOROPROPANE | 78-87-5 | ppbv | 2.2E+00 | 4.3E-01 | 5.0E+00 | 6.5E-01 | 2.6E+00 | 5.0E+00 | 2.6E+00 |
| 1,2-Dichlorotetrafluoroethane | 76-14-2 | ppbv | 2.0E+00 | 2.0E+00 | 2.0E+01 | 2.1E+00 | 1.0E+01 | 2.0E+01 | 9.4E+00 |
| 1,3,5-TRIMETHYLBENZENE | 108-67-8 | ppbv | | 6.1E-01 | 5.1E+00 | 6.1E-01 | 2.4E+00 | 5.1E+00 | 2.8E+00 |
| 1,3-DICHLOROBENZENE | 541-73-1 | ppbv | | 5.0E-01 | 5.0E+00 | 5.0E-01 | 2.5E+00 | 5.0E+00 | 2.7E+00 |
| 1,4-DICHLOROBENZENE | 106-46-7 | ppbv | | 5.0E-01 | 5.0E+00 | 5.0E-01 | 2.5E+00 | 5.0E+00 | 2.7E+00 |
| 1,4-DIOXANE | 123-91-1 | ppbv | 1.0E+01 | 1.0E+01 | 1.0E+02 | 1.1E+01 | 5.0E+01 | 1.0E+02 | 4.7E+01 |
| 2-HEXANONE | 591-78-6 | ppbv | 2.2E+00 | 1.5E+00 | 1.5E+01 | 1.7E+00 | 7.6E+00 | 1.5E+01 | 7.1E+00 |
| 4-ETHYLTOLUENE | 622-96-8 | ppbv | | 6.1E-01 | 5.1E+00 | 6.1E-01 | 2.4E+00 | 5.1E+00 | 2.8E+00 |
| ACETONE | 67-64-1 | ppbv | 1.4E+01 | 1.1E+01 | 2.0E+01 | 5.0E+00 | 1.0E+01 | 2.0E+01 | 1.3E+01 |
| BENZENE | 71-43-2 | ppbv | 6.3E-01 | 6.3E-01 | 5.0E+00 | 1.3E+00 | 2.5E+00 | 5.0E+00 | 2.5E+00 |
| BENZYL CHLORIDE | 100-44-7 | ppbv | | 1.5E+00 | 1.5E+01 | 1.7E+00 | 7.5E+00 | 1.5E+01 | 8.2E+00 |
| BROMODICHLOROMETHANE | 75-27-4 | ppbv | 2.1E+00 | 4.5E-01 | 5.1E+00 | 6.0E-01 | 2.5E+00 | 5.1E+00 | 2.6E+00 |
| BROMOFORM | 75-25-2 | ppbv | | 4.8E-01 | 5.0E+00 | 5.8E-01 | 2.5E+00 | 5.0E+00 | 2.7E+00 |
| BROMOMETHANE | 74-83-9 | ppbv | 2.1E+00 | 5.2E-01 | 4.9E+00 | 5.2E-01 | 2.6E+00 | 4.9E+00 | 2.6E+00 |
| CARBON DISULFIDE | 75-15-0 | ppbv | 1.0E+01 | 1.9E+00 | 2.0E+01 | 2.2E+00 | 1.0E+01 | 2.0E+01 | 1.1E+01 |
| CARBON TETRACHLORIDE | 56-23-5 | ppbv | 2.1E+00 | 4.8E-01 | 4.9E+00 | 6.4E-01 | 2.5E+00 | 4.9E+00 | 2.6E+00 |
| CHLOROBENZENE | 108-90-7 | ppbv | 2.2E+00 | 4.3E-01 | 5.0E+00 | 6.5E-01 | 2.6E+00 | 5.0E+00 | 2.6E+00 |
| CHLOROETHANE | 75-00-3 | ppbv | 1.9E+00 | 3.8E-01 | 4.9E+00 | 7.6E-01 | 2.7E+00 | 4.9E+00 | 2.6E+00 |
| CHLOROFORM | 67-66-3 | ppbv | 9.4E+00 | 4.1E-01 | 7.8E+01 | 7.8E+01 | 3.9E+01 | 7.2E+01 | 4.6E+01 |
| CHLOROMETHANE | 74-87-3 | ppbv | 4.4E+00 | 9.7E-01 | 4.8E+00 | 4.8E-01 | 2.4E+00 | 4.8E+00 | 3.0E+00 |
| CIS-1,2-DICHLOROETHENE | 156-59-2 | ppbv | 2.0E+00 | 5.0E-01 | 5.0E+00 | 2.5E+00 | 2.5E+00 | 5.0E+00 | 2.9E+00 |
| CIS-1,3-DICHLOROPROPENE | 10061-01-5 | ppbv | 2.0E+00 | 4.4E-01 | 5.1E+00 | 6.6E-01 | 2.4E+00 | 5.1E+00 | 2.6E+00 |
| DIBROMOCHLOROMETHANE | 124-48-1 | ppbv | 2.1E+00 | 4.7E-01 | 5.0E+00 | 5.9E-01 | 2.5E+00 | 5.0E+00 | 2.6E+00 |
| ETHYLBENZENE | 100-41-4 | ppbv | 2.1E+00 | 4.6E-01 | 5.1E+00 | 4.6E-01 | 2.5E+00 | 5.1E+00 | 2.6E+00 |
| Freon 11 | 75-69-4 | ppbv | 1.1E+01 | 1.1E+00 | 1.1E+02 | 1.2E+02 | 6.8E+01 | 1.1E+02 | 6.9E+01 |
| Freon 113 | 76-13-1 | ppbv | 4.7E+01 | 1.4E+00 | 5.5E+02 | 5.5E+02 | 2.6E+02 | 4.0E+02 | 3.0E+02 |
| Freon 12 | 75-71-8 | ppbv | 8.1E-01 | 6.1E-01 | 5.1E+00 | 1.0E+00 | 2.4E+00 | 5.1E+00 | 2.5E+00 |
| HEXACHLOROBUTADIENE | 87-68-3 | ppbv | | 1.5E+00 | 1.5E+01 | 1.7E+00 | 7.5E+00 | 1.5E+01 | 8.1E+00 |
| HEXANE (N-HEXANE) | 110-54-3 | ppbv | 1.0E+01 | 2.0E+00 | 2.0E+01 | 2.3E+00 | 9.9E+00 | 2.0E+01 | 1.1E+01 |
| ISOPROPYL ALCOHOL (ISOPROPANOL) | 67-63-0 | ppbv | 1.0E+01 | 4.9E+00 | 4.9E+01 | 5.7E+00 | 2.5E+01 | 4.9E+01 | 2.4E+01 |
| m,p-Xylene | 1330-20-7 | ppbv | 2.1E+00 | 2.1E+00 | 2.0E+01 | 2.3E+00 | 9.9E+00 | 2.0E+01 | 9.4E+00 |
| Methyl ethyl ketone | 78-93-3 | ppbv | 2.0E+00 | 1.4E+00 | 1.5E+01 | 1.7E+00 | 7.5E+00 | 1.5E+01 | 7.1E+00 |
| METHYL ISOBUTYL KETONE | 108-10-1 | ppbv | 2.2E+00 | 1.5E+00 | 1.5E+01 | 1.7E+00 | 7.6E+00 | 1.5E+01 | 7.1E+00 |
| METHYL TERT-BUTYL ETHER | 1634-04-4 | ppbv | 1.9E+00 | 1.9E+00 | 2.0E+01 | 2.2E+00 | 1.0E+01 | 2.0E+01 | 9.3E+00 |
| METHYLENE CHLORIDE | 75-09-2 | ppbv | 1.4E+00 | 4.9E+00 | 4.9E+01 | 1.3E+01 | 2.5E+01 | 4.9E+01 | 2.4E+01 |
| O-XYLENE | 95-47-6 | ppbv | 2.1E+00 | 4.6E-01 | 5.1E+00 | 4.6E-01 | 2.5E+00 | 5.1E+00 | 2.6E+00 |
| STYRENE | 100-42-5 | ppbv | | 1.4E+00 | 1.5E+01 | 1.6E+00 | 7.5E+00 | 1.5E+01 | 8.1E+00 |
| Tetrachloroethene (PCE) | 127-18-4 | ppbv | 2.7E+02 | 4.4E-01 | 4.7E+03 | 2.9E+03 | 1.6E+03 | 2.8E+03 | 2.1E+03 |
| TOLUENE | 108-88-3 | ppbv | 5.3E-01 | 5.3E-01 | 5.0E+00 | 5.3E-01 | 2.4E+00 | 5.0E+00 | 2.3E+00 |
| TRANS-1,2-DICHLOROETHENE | 156-60-5 | ppbv | 2.0E+00 | 5.0E-01 | 5.0E+00 | 2.3E+00 | 2.5E+00 | 5.0E+00 | 2.9E+00 |
| TRANS-1,3-DICHLOROPROPENE | 10061-02-6 | ppbv | 2.0E+00 | 1.1E+00 | 9.9E+00 | 1.1E+00 | 5.1E+00 | 9.9E+00 | 4.8E+00 |
| Trichloroethene (TCE) | 79-01-6 | ppbv | 3.0E+01 | 5.6E-01 | 3.5E+02 | 3.5E+02 | 1.9E+02 | 4.1E+02 | 2.2E+02 |
| VINYL ACETATE | 108-05-4 | ppbv | 1.0E+01 | 2.0E+00 | 2.0E+01 | 2.3E+00 | 9.9E+00 | 2.0E+01 | 1.1E+01 |
| VINYL CHLORIDE | 75-01-4 | ppbv | 2.0E+00 | 3.9E-01 | 5.1E+00 | 3.9E-01 | 2.3E+00 | 5.1E+00 | 2.5E+00 |

**Omega Chemical Site**
**Full Scale On Site Soils Remedy**
**Preliminary Design Report**
**Influent Estimate Detail for Well:** VE-12S
**Basis for Estimated Concentrations:** VE-12S

Performed by JTB Date 10/2/2012
Checked by IL Date 10/10/2012

See Notes on Summary Tab

| Average of NumericResult2 | | | SampleLocation | SampBegDepth | SampEndDepth | Date | | | |
|---|---|---|---|---|---|---|---|---|---|
| | | | VE-12S (blank) (blank) | | | | | | Overall Average |
| Parameter | CAS | Units2 | 1/16/2012 12:26 | 2/20/2012 13:47 | 3/26/2012 17:13 | 4/23/2012 16:53 | 5/15/2012 10:18 | 6/5/2012 13:23 | |
| 1,1,1-Trichloroethane (TCA) | 71-55-6 | ppbv | 2.0E+00 | 5.5E-01 | 5.5E-01 | 5.5E-01 | 1.1E+00 | 2.6E+00 | 1.2E+00 |
| 1,1,2,2-TETRACHLOROETHANE | 79-34-5 | ppbv | | 1.0E+00 | 1.0E+00 | 1.2E+00 | 2.0E+00 | 5.0E+00 | 2.0E+00 |
| 1,1,2-TRICHLOROETHANE | 79-00-5 | ppbv | 2.0E+00 | 5.5E-01 | 5.5E-01 | 5.5E-01 | 1.1E+00 | 2.6E+00 | 1.2E+00 |
| 1,1-DICHLOROETHANE | 75-34-3 | ppbv | 2.0E+00 | 4.9E-01 | 7.4E-01 | 7.4E-01 | 9.9E-01 | 2.5E+00 | 1.2E+00 |
| 1,1-DICHLOROETHENE | 75-35-4 | ppbv | 2.0E+00 | 5.0E-01 | 9.6E+01 | 1.1E+02 | 6.3E+01 | 8.1E+01 | 5.8E+01 |
| 1,2,4-TRICHLOROBENZENE | 120-82-1 | ppbv | | 2.0E+00 | 2.0E+00 | 2.2E+00 | 4.0E+00 | 1.0E+01 | 4.0E+00 |
| 1,2,4-TRIMETHYLBENZENE | 95-63-6 | ppbv | | 1.4E+00 | 1.4E+00 | 1.6E+00 | 3.1E+00 | 7.5E+00 | 3.0E+00 |
| 1,2-Dibromoethane (EDB) | 106-93-4 | ppbv | 2.1E+00 | 5.2E-01 | 5.2E-01 | 5.2E-01 | 1.0E+00 | 2.5E+00 | 1.2E+00 |
| 1,2-DICHLOROBENZENE | 95-50-1 | ppbv | | 5.0E-01 | 5.0E-01 | 5.0E-01 | 1.0E+00 | 2.5E+00 | 1.0E+00 |
| 1,2-DICHLOROETHANE | 107-06-2 | ppbv | 2.0E+00 | 4.9E-01 | 7.4E-01 | 7.4E-01 | 9.9E-01 | 2.5E+00 | 1.2E+00 |
| 1,2-DICHLOROPROPANE | 78-87-5 | ppbv | 2.2E+00 | 4.3E-01 | 4.3E-01 | 6.5E-01 | 1.1E+00 | 2.6E+00 | 1.2E+00 |
| 1,2-Dichlorotetrafluoroethane | 76-14-2 | ppbv | 2.0E+00 | 2.0E+00 | 2.0E+00 | 2.1E+00 | 4.0E+00 | 1.0E+01 | 3.7E+00 |
| 1,3,5-TRIMETHYLBENZENE | 108-67-8 | ppbv | | 6.1E-01 | 6.1E-01 | 6.1E-01 | 1.0E+00 | 2.4E+00 | 1.1E+00 |
| 1,3-DICHLOROBENZENE | 541-73-1 | ppbv | | 5.0E-01 | 5.0E-01 | 5.0E-01 | 1.0E+00 | 2.5E+00 | 1.0E+00 |
| 1,4-DICHLOROBENZENE | 106-46-7 | ppbv | | 5.0E-01 | 5.0E-01 | 5.0E-01 | 1.0E+00 | 2.5E+00 | 1.0E+00 |
| 1,4-DIOXANE | 123-91-1 | ppbv | 1.0E+01 | 1.0E+01 | 1.0E+01 | 1.1E+01 | 2.0E+01 | 5.0E+01 | 1.8E+01 |
| 2-HEXANONE | 591-78-6 | ppbv | 2.2E+00 | 1.5E+00 | 1.5E+00 | 1.7E+00 | 2.9E+00 | 7.6E+00 | 2.9E+00 |
| 4-ETHYLTOLUENE | 622-96-8 | ppbv | | 6.1E-01 | 6.1E-01 | 6.1E-01 | 1.0E+00 | 2.4E+00 | 1.1E+00 |
| ACETONE | 67-64-1 | ppbv | 1.3E+01 | 1.6E+01 | 7.6E+00 | 2.3E+01 | 5.5E+00 | 1.0E+01 | 1.3E+01 |
| BENZENE | 71-43-2 | ppbv | 9.4E-01 | 6.3E-01 | 6.3E-01 | 6.3E-01 | 9.4E-01 | 2.5E+00 | 1.0E+00 |
| BENZYL CHLORIDE | 100-44-7 | ppbv | | 1.5E+00 | 1.5E+00 | 1.7E+00 | 3.1E+00 | 7.5E+00 | 3.1E+00 |
| BROMODICHLOROMETHANE | 75-27-4 | ppbv | 2.1E+00 | 4.5E-01 | 4.5E-01 | 6.0E-01 | 1.0E+00 | 2.5E+00 | 1.2E+00 |
| BROMOFORM | 75-25-2 | ppbv | | 4.8E-01 | 4.8E-01 | 5.8E-01 | 9.7E-01 | 2.5E+00 | 1.0E+00 |
| BROMOMETHANE | 74-83-9 | ppbv | 2.1E+00 | 5.2E-01 | 5.2E-01 | 5.2E-01 | 1.0E+00 | 2.6E+00 | 1.2E+00 |
| CARBON DISULFIDE | 75-15-0 | ppbv | 1.0E+01 | 1.9E+00 | 1.9E+00 | 2.2E+00 | 3.9E+00 | 1.0E+01 | 5.0E+00 |
| CARBON TETRACHLORIDE | 56-23-5 | ppbv | 2.1E+00 | 4.8E-01 | 4.8E-01 | 4.8E-01 | 9.5E-01 | 2.5E+00 | 1.2E+00 |
| CHLOROBENZENE | 108-90-7 | ppbv | 2.2E+00 | 4.3E-01 | 4.3E-01 | 6.5E-01 | 1.1E+00 | 2.6E+00 | 1.2E+00 |
| CHLOROETHANE | 75-00-3 | ppbv | 1.9E+00 | 3.8E-01 | 3.8E-01 | 3.8E-01 | 1.1E+00 | 2.7E+00 | 1.1E+00 |
| CHLOROFORM | 67-66-3 | ppbv | 2.0E+00 | 4.1E-01 | 7.4E+00 | 5.7E+00 | 3.1E+00 | 3.9E+00 | 3.8E+00 |
| CHLOROMETHANE | 74-87-3 | ppbv | 9.7E-01 | 9.7E-01 | 4.8E-01 | 4.8E-01 | 9.7E-01 | 2.4E+00 | 1.0E+00 |
| CIS-1,2-DICHLOROETHENE | 156-59-2 | ppbv | 2.0E+00 | 5.0E-01 | 5.0E-01 | 5.0E-01 | 1.0E+00 | 2.5E+00 | 1.2E+00 |
| CIS-1,3-DICHLOROPROPENE | 10061-01-5 | ppbv | 2.0E+00 | 4.4E-01 | 4.4E-01 | 6.6E-01 | 1.1E+00 | 2.4E+00 | 1.2E+00 |
| DIBROMOCHLOROMETHANE | 124-48-1 | ppbv | 2.1E+00 | 4.7E-01 | 4.7E-01 | 5.9E-01 | 1.1E+00 | 2.5E+00 | 1.2E+00 |
| ETHYLBENZENE | 100-41-4 | ppbv | 4.6E-01 | 4.6E-01 | 4.6E-01 | 4.6E-01 | 9.2E-01 | 2.5E+00 | 8.8E-01 |
| Freon 11 | 75-69-4 | ppbv | 2.1E+00 | 1.1E+00 | 4.6E+01 | 3.9E+01 | 2.8E+01 | 3.4E+01 | 2.5E+01 |
| Freon 113 | 76-13-1 | ppbv | 2.1E+00 | 1.4E+00 | 2.1E+02 | 2.7E+02 | 1.8E+02 | 2.2E+02 | 1.5E+02 |
| Freon 12 | 75-71-8 | ppbv | 6.1E-01 | 6.1E-01 | 1.2E+00 | 1.2E+00 | 1.2E+00 | 2.4E+00 | 1.2E+00 |
| HEXACHLOROBUTADIENE | 87-68-3 | ppbv | | 1.5E+00 | 1.5E+00 | 1.6E+00 | 3.0E+00 | 7.5E+00 | 3.0E+00 |
| HEXANE (N-HEXANE) | 110-54-3 | ppbv | 1.0E+01 | 2.0E+00 | 2.0E+00 | 2.3E+00 | 4.0E+00 | 9.9E+00 | 5.1E+00 |
| ISOPROPYL ALCOHOL (ISOPROPANOL) | 67-63-0 | ppbv | 1.0E+01 | 4.9E+00 | 4.9E+00 | 5.3E+00 | 1.0E+01 | 2.5E+01 | 1.0E+01 |
| m,p-Xylene | 1330-20-7 | ppbv | 2.3E+00 | 2.1E+00 | 2.1E+00 | 2.3E+00 | 3.9E+00 | 9.9E+00 | 3.8E+00 |
| Methyl ethyl ketone | 78-93-3 | ppbv | 2.0E+00 | 1.4E+00 | 1.4E+00 | 1.7E+00 | 3.1E+00 | 7.5E+00 | 2.8E+00 |
| METHYL ISOBUTYL KETONE | 108-10-1 | ppbv | 2.2E+00 | 1.5E+00 | 1.5E+00 | 1.7E+00 | 2.9E+00 | 7.6E+00 | 2.9E+00 |
| METHYL TERT-BUTYL ETHER | 1634-04-4 | ppbv | 1.9E+00 | 1.9E+00 | 1.9E+00 | 2.2E+00 | 3.9E+00 | 1.0E+01 | 3.6E+00 |
| METHYLENE CHLORIDE | 75-09-2 | ppbv | 2.0E+00 | 4.9E+00 | 4.9E+00 | 5.5E+00 | 1.0E+01 | 2.5E+01 | 8.7E+00 |
| O-XYLENE | 95-47-6 | ppbv | 9.2E-01 | 4.6E-01 | 4.6E-01 | 4.6E-01 | 9.2E-01 | 2.5E+00 | 9.6E-01 |
| STYRENE | 100-42-5 | ppbv | | 1.4E+00 | 1.4E+00 | 1.6E+00 | 3.1E+00 | 7.5E+00 | 3.0E+00 |
| Tetrachloroethene (PCE) | 127-18-4 | ppbv | 2.1E+00 | 4.4E-01 | 4.3E+02 | 4.7E+02 | 2.4E+02 | 3.5E+02 | 2.5E+02 |
| TOLUENE | 108-88-3 | ppbv | 2.1E+00 | 5.3E-01 | 5.3E-01 | 5.3E-01 | 1.1E+00 | 2.4E+00 | 1.2E+00 |
| TRANS-1,2-DICHLOROETHENE | 156-60-5 | ppbv | 2.0E+00 | 5.0E-01 | 5.0E-01 | 5.0E-01 | 1.0E+00 | 2.5E+00 | 1.2E+00 |
| TRANS-1,3-DICHLOROPROPENE | 10061-02-6 | ppbv | 2.0E+00 | 1.1E+00 | 1.1E+00 | 1.1E+00 | 2.0E+00 | 5.1E+00 | 2.1E+00 |
| Trichloroethene (TCE) | 79-01-6 | ppbv | 2.0E+00 | 5.6E-01 | 2.8E+01 | 2.6E+01 | 1.5E+01 | 1.6E+01 | 1.5E+01 |
| VINYL ACETATE | 108-05-4 | ppbv | 1.0E+01 | 2.0E+00 | 2.0E+00 | 2.3E+00 | 4.0E+00 | 9.9E+00 | 5.1E+00 |
| VINYL CHLORIDE | 75-01-4 | ppbv | 2.0E+00 | 3.9E-01 | 3.9E-01 | 3.9E-01 | 1.2E+00 | 2.3E+00 | 1.1E+00 |

**Omega Chemical Site**
**Full Scale On Site Soils Remedy**
**Preliminary Design Report**
**Influent Estimate Detail for Well:** **VE-14S**
**Basis for Estimated Concentrations:** **VE-14S**

Performed by JTB Date 10/2/2012
Checked by IL Date 10/10/2012

See Notes on Summary Tab

| Average of NumericResult2 | | | SampleLocation | SampBegDepth | SampEndDepth | Date | | | |
|---|---|---|---|---|---|---|---|---|---|
| | | | VE-14S (blank) (blank) | | | | | | Overall Average |
| **Parameter** | **CAS** | **Units2** | **1/16/2012 12:25** | **2/20/2012 13:52** | **3/26/2012 16:38** | **4/23/2012 16:56** | **5/15/2012 10:23** | **6/5/2012 13:28** | |
| **1,1,1-Trichloroethane (TCA)** | **71-55-6** | ppbv | 9.2E-01 | 1.1E+00 | 1.1E+00 | 7.3E-01 | 9.2E-01 | 5.5E-01 | 8.9E-01 |
| **1,1,2,2-TETRACHLOROETHANE** | **79-34-5** | ppbv | | 1.0E+00 | 1.0E+00 | 1.2E+00 | 1.2E+00 | 1.0E+00 | 1.1E+00 |
| **1,1,2-TRICHLOROETHANE** | **79-00-5** | ppbv | 2.0E+00 | 5.5E-01 | 5.5E-01 | 5.5E-01 | 5.5E-01 | 5.5E-01 | 7.9E-01 |
| **1,1-DICHLOROETHANE** | **75-34-3** | ppbv | 2.2E+00 | 4.9E-01 | 4.9E-01 | 4.9E-01 | 4.9E-01 | 4.9E-01 | 7.8E-01 |
| **1,1-DICHLOROETHENE** | **75-35-4** | ppbv | 2.0E+00 | 5.0E-01 | 5.0E-01 | 5.0E-01 | 5.0E-01 | 5.0E-01 | 7.6E-01 |
| **1,2,4-TRICHLOROBENZENE** | **120-82-1** | ppbv | | 2.0E+00 | 2.0E+00 | 2.3E+00 | 2.4E+00 | 2.0E+00 | 2.2E+00 |
| **1,2,4-TRIMETHYLBENZENE** | **95-63-6** | ppbv | | 1.4E+00 | 1.4E+00 | 1.6E+00 | 1.8E+00 | 1.4E+00 | 1.5E+00 |
| **1,2-Dibromoethane (EDB)** | **106-93-4** | ppbv | 2.1E+00 | 5.2E-01 | 5.2E-01 | 5.2E-01 | 6.5E-01 | 5.2E-01 | 8.0E-01 |
| **1,2-DICHLOROBENZENE** | **95-50-1** | ppbv | | 5.0E-01 | 5.0E-01 | 5.0E-01 | 6.7E-01 | 5.0E-01 | 5.3E-01 |
| **1,2-DICHLOROETHANE** | **107-06-2** | ppbv | 2.2E+00 | 4.9E-01 | 4.9E-01 | 4.9E-01 | 4.9E-01 | 4.9E-01 | 7.8E-01 |
| **1,2-DICHLOROPROPANE** | **78-87-5** | ppbv | 2.2E+00 | 4.3E-01 | 4.3E-01 | 6.5E-01 | 6.5E-01 | 4.3E-01 | 7.9E-01 |
| **1,2-Dichlorotetrafluoroethane** | **76-14-2** | ppbv | 2.1E+00 | 2.0E+00 | 2.0E+00 | 2.3E+00 | 2.3E+00 | 2.0E+00 | 2.1E+00 |
| **1,3,5-TRIMETHYLBENZENE** | **108-67-8** | ppbv | | 6.1E-01 | 6.1E-01 | 6.1E-01 | 6.1E-01 | 6.1E-01 | 6.1E-01 |
| **1,3-DICHLOROBENZENE** | **541-73-1** | ppbv | | 5.0E-01 | 5.0E-01 | 5.0E-01 | 6.7E-01 | 5.0E-01 | 5.3E-01 |
| **1,4-DICHLOROBENZENE** | **106-46-7** | ppbv | | 5.0E-01 | 5.0E-01 | 5.0E-01 | 6.7E-01 | 5.0E-01 | 5.3E-01 |
| **1,4-DIOXANE** | **123-91-1** | ppbv | 1.1E+01 | 1.0E+01 | 1.0E+01 | 1.1E+01 | 1.2E+01 | 1.0E+01 | 1.1E+01 |
| **2-HEXANONE** | **591-78-6** | ppbv | 2.2E+00 | 1.5E+00 | 1.5E+00 | 1.7E+00 | 1.7E+00 | 1.5E+00 | 1.7E+00 |
| **4-ETHYLTOLUENE** | **622-96-8** | ppbv | | 6.1E-01 | 6.1E-01 | 6.1E-01 | 6.1E-01 | 6.1E-01 | 6.1E-01 |
| **ACETONE** | **67-64-1** | ppbv | 1.4E+01 | 9.7E+00 | 6.3E+00 | 9.3E+00 | 6.7E+00 | 5.5E+00 | 8.6E+00 |
| **BENZENE** | **71-43-2** | ppbv | 6.9E+00 | 2.5E+00 | 6.3E-01 | 6.3E-01 | 6.3E-01 | 6.3E-01 | 2.0E+00 |
| **BENZYL CHLORIDE** | **100-44-7** | ppbv | | 1.5E+00 | 1.5E+00 | 1.7E+00 | 1.7E+00 | 1.5E+00 | 1.6E+00 |
| **BROMODICHLOROMETHANE** | **75-27-4** | ppbv | 2.1E+00 | 4.5E-01 | 4.5E-01 | 6.0E-01 | 6.0E-01 | 4.5E-01 | 7.7E-01 |
| **BROMOFORM** | **75-25-2** | ppbv | | 4.8E-01 | 4.8E-01 | 5.8E-01 | 5.8E-01 | 4.8E-01 | 5.2E-01 |
| **BROMOMETHANE** | **74-83-9** | ppbv | 2.1E+00 | 5.2E-01 | 5.2E-01 | 5.2E-01 | 5.2E-01 | 5.2E-01 | 7.7E-01 |
| **CARBON DISULFIDE** | **75-15-0** | ppbv | 1.1E+01 | 1.9E+00 | 1.9E+00 | 2.2E+00 | 2.2E+00 | 1.9E+00 | 3.5E+00 |
| **CARBON TETRACHLORIDE** | **56-23-5** | ppbv | 2.1E+00 | 4.8E-01 | 4.8E-01 | 6.4E-01 | 6.4E-01 | 4.8E-01 | 7.9E-01 |
| **CHLOROBENZENE** | **108-90-7** | ppbv | 2.2E+00 | 4.3E-01 | 4.3E-01 | 6.5E-01 | 6.5E-01 | 4.3E-01 | 8.0E-01 |
| **CHLOROETHANE** | **75-00-3** | ppbv | 2.3E+00 | 3.8E-01 | 3.8E-01 | 7.6E-01 | 7.6E-01 | 3.8E-01 | 8.2E-01 |
| **CHLOROFORM** | **67-66-3** | ppbv | 2.0E+00 | 4.1E-01 | 4.1E-01 | 6.1E-01 | 6.1E-01 | 4.1E-01 | 7.5E-01 |
| **CHLOROMETHANE** | **74-87-3** | ppbv | 9.7E-01 | 4.8E-01 | 4.8E-01 | 4.8E-01 | 4.8E-01 | 4.8E-01 | 5.6E-01 |
| **CIS-1,2-DICHLOROETHENE** | **156-59-2** | ppbv | 2.0E+00 | 5.0E-01 | 5.0E-01 | 5.0E-01 | 5.0E-01 | 5.0E-01 | 7.6E-01 |
| **CIS-1,3-DICHLOROPROPENE** | **10061-01-5** | ppbv | 2.2E+00 | 4.4E-01 | 4.4E-01 | 6.6E-01 | 6.6E-01 | 4.4E-01 | 8.1E-01 |
| **DIBROMOCHLOROMETHANE** | **124-48-1** | ppbv | 2.1E+00 | 4.7E-01 | 4.7E-01 | 5.9E-01 | 5.9E-01 | 4.7E-01 | 7.8E-01 |
| **ETHYLBENZENE** | **100-41-4** | ppbv | 6.0E+00 | 9.2E-01 | 4.6E-01 | 4.6E-01 | 6.9E-01 | 4.6E-01 | 1.5E+00 |
| **Freon 11** | **75-69-4** | ppbv | 1.4E+00 | 2.0E+00 | 2.1E+00 | 2.5E+00 | 3.2E+00 | 2.0E+00 | 2.2E+00 |
| **Freon 113** | **76-13-1** | ppbv | 2.3E+00 | 3.1E+00 | 2.9E+00 | 4.2E+00 | 5.0E+00 | 3.0E+00 | 3.4E+00 |
| **Freon 12** | **75-71-8** | ppbv | 8.1E-01 | 6.1E-01 | 6.1E-01 | 6.1E-01 | 6.1E-01 | 6.1E-01 | 6.4E-01 |
| **HEXACHLOROBUTADIENE** | **87-68-3** | ppbv | | 1.5E+00 | 1.5E+00 | 1.7E+00 | 1.8E+00 | 1.5E+00 | 1.6E+00 |
| **HEXANE (N-HEXANE)** | **110-54-3** | ppbv | 1.0E+01 | 2.0E+00 | 2.0E+00 | 2.3E+00 | 2.3E+00 | 2.0E+00 | 3.5E+00 |
| **ISOPROPYL ALCOHOL (ISOPROPANOL)** | **67-63-0** | ppbv | 1.1E+01 | 4.9E+00 | 4.9E+00 | 5.7E+00 | 6.1E+00 | 4.9E+00 | 6.2E+00 |
| **m,p-Xylene** | **1330-20-7** | ppbv | 4.6E+01 | 2.1E+00 | 2.1E+00 | 2.3E+00 | 2.3E+00 | 2.1E+00 | 9.5E+00 |
| **Methyl ethyl ketone** | **78-93-3** | ppbv | 3.7E+00 | 1.4E+00 | 1.4E+00 | 1.7E+00 | 1.7E+00 | 1.4E+00 | 1.9E+00 |
| **METHYL ISOBUTYL KETONE** | **108-10-1** | ppbv | 2.2E+00 | 1.5E+00 | 1.5E+00 | 1.7E+00 | 1.7E+00 | 1.5E+00 | 1.7E+00 |
| **METHYL TERT-BUTYL ETHER** | **1634-04-4** | ppbv | 3.3E+00 | 1.9E+00 | 1.9E+00 | 2.2E+00 | 2.5E+00 | 1.9E+00 | 2.3E+00 |
| **METHYLENE CHLORIDE** | **75-09-2** | ppbv | 2.0E+00 | 4.9E+00 | 4.9E+00 | 5.5E+00 | 5.8E+00 | 4.9E+00 | 4.7E+00 |
| **O-XYLENE** | **95-47-6** | ppbv | 1.6E+01 | 4.6E-01 | 4.6E-01 | 4.6E-01 | 6.9E-01 | 4.6E-01 | 3.1E+00 |
| **STYRENE** | **100-42-5** | ppbv | | 1.4E+00 | 1.4E+00 | 1.6E+00 | 1.9E+00 | 1.4E+00 | 1.5E+00 |
| **Tetrachloroethene (PCE)** | **127-18-4** | ppbv | 3.5E+00 | 3.1E+00 | 1.6E+01 | 6.9E+00 | 6.9E+00 | 5.3E+00 | 7.0E+00 |
| **TOLUENE** | **108-88-3** | ppbv | 4.0E+01 | 8.0E-01 | 5.3E-01 | 5.3E-01 | 5.3E-01 | 5.3E-01 | 7.1E+00 |
| **TRANS-1,2-DICHLOROETHENE** | **156-60-5** | ppbv | 2.0E+00 | 5.0E-01 | 5.0E-01 | 5.0E-01 | 5.0E-01 | 5.0E-01 | 7.6E-01 |
| **TRANS-1,3-DICHLOROPROPENE** | **10061-02-6** | ppbv | 2.2E+00 | 1.1E+00 | 1.1E+00 | 1.1E+00 | 1.1E+00 | 1.1E+00 | 1.3E+00 |
| **Trichloroethene (TCE)** | **79-01-6** | ppbv | 2.2E+00 | 1.7E+00 | 2.8E+00 | 1.5E+01 | 2.6E+00 | 1.3E+00 | 4.2E+00 |
| **VINYL ACETATE** | **108-05-4** | ppbv | 1.1E+01 | 2.0E+00 | 2.0E+00 | 2.3E+00 | 2.3E+00 | 2.0E+00 | 3.5E+00 |
| **VINYL CHLORIDE** | **75-01-4** | ppbv | 2.0E+00 | 3.9E-01 | 3.9E-01 | 3.9E-01 | 7.8E-01 | 3.9E-01 | 7.2E-01 |

**Omega Chemical Site**
**Full Scale On Site Soils Remedy**
**Preliminary Design Report**
**Influent Estimate Detail for Well:** VE-15S
**Basis for Estimated Concentrations:** VE-15S

Performed by JTB Date 10/2/2012
Checked by IL Date 10/10/2012

See Notes on Summary Tab

| Average of NumericResult2 | | | SampleLocation | SampBegDepth | SampEndDepth | Date | | | |
|---|---|---|---|---|---|---|---|---|---|
| | | | VE-15S (blank) (blank) | | | | | | Overall Average |
| Parameter | CAS | Units2 | 1/16/2012 12:27 | 2/20/2012 14:02 | 3/26/2012 17:23 | 4/23/2012 16:59 | 5/15/2012 10:28 | 6/5/2012 13:33 | |
| 1,1,1-Trichloroethane (TCA) | 71-55-6 | ppbv | 2.0E+00 | 5.5E-01 | 1.6E+00 | 5.5E-01 | 5.5E-01 | 2.6E+00 | 1.3E+00 |
| 1,1,2,2-TETRACHLOROETHANE | 79-34-5 | ppbv | | 1.0E+00 | 3.2E+00 | 1.2E+00 | 1.2E+00 | 5.0E+00 | 2.3E+00 |
| 1,1,2-TRICHLOROETHANE | 79-00-5 | ppbv | 2.0E+00 | 5.5E-01 | 1.6E+00 | 5.5E-01 | 5.5E-01 | 2.6E+00 | 1.3E+00 |
| 1,1-DICHLOROETHANE | 75-34-3 | ppbv | 2.0E+00 | 4.9E-01 | 1.5E+00 | 4.9E-01 | 4.9E-01 | 2.5E+00 | 1.2E+00 |
| 1,1-DICHLOROETHENE | 75-35-4 | ppbv | 2.2E+01 | 5.0E-01 | 2.4E+01 | 3.0E+01 | 2.8E+01 | 3.8E+01 | 2.4E+01 |
| 1,2,4-TRICHLOROBENZENE | 120-82-1 | ppbv | | 2.0E+00 | 6.3E+00 | 2.2E+00 | 2.3E+00 | 1.0E+01 | 4.6E+00 |
| 1,2,4-TRIMETHYLBENZENE | 95-63-6 | ppbv | | 1.4E+00 | 4.7E+00 | 1.6E+00 | 1.6E+00 | 7.5E+00 | 3.4E+00 |
| 1,2-Dibromoethane (EDB) | 106-93-4 | ppbv | 2.1E+00 | 5.2E-01 | 1.6E+00 | 5.2E-01 | 5.2E-01 | 2.5E+00 | 1.3E+00 |
| 1,2-DICHLOROBENZENE | 95-50-1 | ppbv | | 5.0E-01 | 1.7E+00 | 5.0E-01 | 5.0E-01 | 2.5E+00 | 1.1E+00 |
| 1,2-DICHLOROETHANE | 107-06-2 | ppbv | 2.0E+00 | 4.9E-01 | 1.5E+00 | 4.9E-01 | 4.9E-01 | 2.5E+00 | 1.2E+00 |
| 1,2-DICHLOROPROPANE | 78-87-5 | ppbv | 1.9E+00 | 4.3E-01 | 1.5E+00 | 6.5E-01 | 6.5E-01 | 2.6E+00 | 1.3E+00 |
| 1,2-Dichlorotetrafluoroethane | 76-14-2 | ppbv | 2.0E+00 | 2.0E+00 | 6.3E+00 | 2.1E+00 | 2.3E+00 | 1.0E+01 | 4.1E+00 |
| 1,3,5-TRIMETHYLBENZENE | 108-67-8 | ppbv | | 6.1E-01 | 1.6E+00 | 6.1E-01 | 6.1E-01 | 2.4E+00 | 1.2E+00 |
| 1,3-DICHLOROBENZENE | 541-73-1 | ppbv | | 5.0E-01 | 1.7E+00 | 5.0E-01 | 5.0E-01 | 2.5E+00 | 1.1E+00 |
| 1,4-DICHLOROBENZENE | 106-46-7 | ppbv | | 5.0E-01 | 1.7E+00 | 5.0E-01 | 5.0E-01 | 2.5E+00 | 1.1E+00 |
| 1,4-DIOXANE | 123-91-1 | ppbv | 1.0E+01 | 1.0E+01 | 3.1E+01 | 1.1E+01 | 1.1E+01 | 5.0E+01 | 2.0E+01 |
| 2-HEXANONE | 591-78-6 | ppbv | 2.0E+00 | 1.5E+00 | 4.9E+00 | 1.7E+00 | 1.7E+00 | 7.6E+00 | 3.2E+00 |
| 4-ETHYLTOLUENE | 622-96-8 | ppbv | | 6.1E-01 | 1.6E+00 | 6.1E-01 | 6.1E-01 | 2.4E+00 | 1.2E+00 |
| ACETONE | 67-64-1 | ppbv | 1.6E+01 | 2.0E+01 | 7.6E+00 | 3.8E+00 | 8.0E+00 | 1.0E+01 | 1.1E+01 |
| BENZENE | 71-43-2 | ppbv | 6.3E-01 | 9.4E-01 | 1.6E+00 | 6.3E-01 | 6.3E-01 | 2.5E+00 | 1.1E+00 |
| BENZYL CHLORIDE | 100-44-7 | ppbv | | 1.5E+00 | 4.8E+00 | 1.7E+00 | 1.7E+00 | 7.5E+00 | 3.5E+00 |
| BROMODICHLOROMETHANE | 75-27-4 | ppbv | 2.1E+00 | 4.5E-01 | 1.6E+00 | 6.0E-01 | 6.0E-01 | 2.5E+00 | 1.3E+00 |
| BROMOFORM | 75-25-2 | ppbv | | 4.8E-01 | 1.5E+00 | 5.8E-01 | 5.8E-01 | 2.5E+00 | 1.1E+00 |
| BROMOMETHANE | 74-83-9 | ppbv | 2.1E+00 | 5.2E-01 | 1.5E+00 | 5.2E-01 | 5.2E-01 | 2.6E+00 | 1.3E+00 |
| CARBON DISULFIDE | 75-15-0 | ppbv | 1.0E+01 | 1.9E+00 | 6.4E+00 | 2.2E+00 | 2.2E+00 | 1.0E+01 | 5.5E+00 |
| CARBON TETRACHLORIDE | 56-23-5 | ppbv | 2.1E+00 | 4.8E-01 | 1.6E+00 | 6.4E-01 | 6.4E-01 | 2.5E+00 | 1.3E+00 |
| CHLOROBENZENE | 108-90-7 | ppbv | 2.0E+00 | 4.3E-01 | 1.5E+00 | 6.5E-01 | 6.5E-01 | 2.6E+00 | 1.3E+00 |
| CHLOROETHANE | 75-00-3 | ppbv | 1.9E+00 | 3.8E-01 | 1.5E+00 | 7.6E-01 | 7.6E-01 | 2.7E+00 | 1.3E+00 |
| CHLOROFORM | 67-66-3 | ppbv | 4.1E-01 | 4.1E-01 | 1.6E+00 | 6.1E-01 | 6.1E-01 | 2.5E+00 | 1.0E+00 |
| CHLOROMETHANE | 74-87-3 | ppbv | 3.9E+00 | 9.7E-01 | 1.5E+00 | 4.8E-01 | 4.8E-01 | 2.4E+00 | 1.6E+00 |
| CIS-1,2-DICHLOROETHENE | 156-59-2 | ppbv | 2.0E+00 | 5.0E-01 | 1.5E+00 | 5.0E-01 | 5.0E-01 | 2.5E+00 | 1.3E+00 |
| CIS-1,3-DICHLOROPROPENE | 10061-01-5 | ppbv | 2.0E+00 | 4.4E-01 | 1.5E+00 | 6.6E-01 | 6.6E-01 | 2.4E+00 | 1.3E+00 |
| DIBROMOCHLOROMETHANE | 124-48-1 | ppbv | 2.0E+00 | 4.7E-01 | 1.6E+00 | 5.9E-01 | 5.9E-01 | 2.5E+00 | 1.3E+00 |
| ETHYLBENZENE | 100-41-4 | ppbv | 4.6E-01 | 6.9E-01 | 1.6E+00 | 4.6E-01 | 6.9E-01 | 2.5E+00 | 1.1E+00 |
| Freon 11 | 75-69-4 | ppbv | 3.0E+00 | 1.1E+00 | 3.9E+00 | 3.6E+00 | 4.1E+00 | 5.5E+00 | 3.5E+00 |
| Freon 113 | 76-13-1 | ppbv | 4.8E+00 | 1.4E+00 | 6.4E+00 | 9.0E+00 | 9.0E+00 | 1.3E+01 | 7.2E+00 |
| Freon 12 | 75-71-8 | ppbv | 6.1E-01 | 8.1E-01 | 1.6E+00 | 6.1E-01 | 6.1E-01 | 2.4E+00 | 1.1E+00 |
| HEXACHLOROBUTADIENE | 87-68-3 | ppbv | | 1.5E+00 | 4.8E+00 | 1.7E+00 | 1.7E+00 | 7.5E+00 | 3.4E+00 |
| HEXANE (N-HEXANE) | 110-54-3 | ppbv | 1.0E+01 | 2.0E+00 | 6.2E+00 | 2.3E+00 | 2.3E+00 | 9.9E+00 | 5.5E+00 |
| ISOPROPYL ALCOHOL (ISOPROPANOL) | 67-63-0 | ppbv | 1.0E+01 | 4.9E+00 | 1.6E+01 | 5.7E+00 | 5.7E+00 | 2.5E+01 | 1.1E+01 |
| m,p-Xylene | 1330-20-7 | ppbv | 3.2E+00 | 2.1E+00 | 6.4E+00 | 2.3E+00 | 2.3E+00 | 9.9E+00 | 4.4E+00 |
| Methyl ethyl ketone | 78-93-3 | ppbv | 2.0E+00 | 1.4E+00 | 4.7E+00 | 1.7E+00 | 1.7E+00 | 7.5E+00 | 3.2E+00 |
| METHYL ISOBUTYL KETONE | 108-10-1 | ppbv | 2.0E+00 | 1.5E+00 | 4.9E+00 | 1.7E+00 | 1.7E+00 | 7.6E+00 | 3.2E+00 |
| METHYL TERT-BUTYL ETHER | 1634-04-4 | ppbv | 1.9E+00 | 1.9E+00 | 6.4E+00 | 2.2E+00 | 2.2E+00 | 1.0E+01 | 4.1E+00 |
| METHYLENE CHLORIDE | 75-09-2 | ppbv | 2.0E+00 | 4.9E+00 | 1.6E+01 | 5.5E+00 | 5.8E+00 | 2.5E+01 | 9.8E+00 |
| O-XYLENE | 95-47-6 | ppbv | 1.4E+00 | 4.6E-01 | 1.6E+00 | 4.6E-01 | 6.9E-01 | 2.5E+00 | 1.2E+00 |
| STYRENE | 100-42-5 | ppbv | | 1.4E+00 | 4.7E+00 | 1.6E+00 | 1.6E+00 | 7.5E+00 | 3.4E+00 |
| Tetrachloroethene (PCE) | 127-18-4 | ppbv | 4.9E+01 | 4.4E-01 | 4.7E+01 | 5.3E+01 | 4.1E+01 | 6.3E+01 | 4.2E+01 |
| TOLUENE | 108-88-3 | ppbv | 2.7E+00 | 1.3E+00 | 1.6E+00 | 5.3E-01 | 5.3E-01 | 2.4E+00 | 1.5E+00 |
| TRANS-1,2-DICHLOROETHENE | 156-60-5 | ppbv | 2.0E+00 | 5.0E-01 | 1.5E+00 | 5.0E-01 | 5.0E-01 | 2.5E+00 | 1.3E+00 |
| TRANS-1,3-DICHLOROPROPENE | 10061-02-6 | ppbv | 2.0E+00 | 1.1E+00 | 3.1E+00 | 1.1E+00 | 1.1E+00 | 5.1E+00 | 2.2E+00 |
| Trichloroethene (TCE) | 79-01-6 | ppbv | 4.5E+01 | 5.6E-01 | 3.5E+01 | 3.2E+01 | 2.8E+01 | 3.9E+01 | 3.0E+01 |
| VINYL ACETATE | 108-05-4 | ppbv | 1.0E+01 | 2.0E+00 | 6.2E+00 | 2.3E+00 | 2.3E+00 | 9.9E+00 | 5.5E+00 |
| VINYL CHLORIDE | 75-01-4 | ppbv | 2.0E+00 | 3.9E-01 | 1.6E+00 | 3.9E-01 | 7.8E-01 | 2.3E+00 | 1.2E+00 |

**Omega Chemical Site**
**Full Scale On Site Soils Remedy**
**Preliminary Design Report**
**Influent Estimate Detail for Well:** **VE-20S**
**Basis for Estimated Concentrations:** **VE-20S**

Performed by JTB Date 10/2/2012
Checked by IL Date 10/10/2012

See Notes on Summary Tab

| Sum of NumericResult2 | | | SampleLocation | SampBegDepth | SampEndDepth | Date |
|---|---|---|---|---|---|---|
| | | | VE-20S | | | Overall Average |
| | | | (blank) | | | |
| | | | (blank) | | | |
| **Parameter** | **CAS** | **Units2** | **6/5/2012 16:43** | **7/3/2012 13:02** | **7/9/2012 19:08** | |
| **1,1,1-Trichloroethane (TCA)** | **71-55-6** | ppbv | 4.9E+00 | 5.5E-01 | 1.0E+00 | 6.5E+00 |
| **1,1,2,2-TETRACHLOROETHANE** | **79-34-5** | ppbv | 1.0E+01 | 1.0E+00 | 1.0E+00 | 1.2E+01 |
| **1,1,2-TRICHLOROETHANE** | **79-00-5** | ppbv | 4.9E+00 | 5.5E-01 | 1.0E+00 | 6.5E+00 |
| **1,1-DICHLOROETHANE** | **75-34-3** | ppbv | 4.9E+00 | 4.9E-01 | 1.0E+00 | 6.4E+00 |
| **1,1-DICHLOROETHENE** | **75-35-4** | ppbv | 1.0E+02 | 4.0E+01 | 4.0E+01 | 1.8E+02 |
| **1,2,4-TRICHLOROBENZENE** | **120-82-1** | ppbv | 2.0E+01 | 2.0E+00 | 2.0E+00 | 2.4E+01 |
| **1,2,4-TRIMETHYLBENZENE** | **95-63-6** | ppbv | 1.5E+01 | 1.4E+00 | 2.0E+00 | 1.8E+01 |
| **1,2-Dibromoethane (EDB)** | **106-93-4** | ppbv | 4.9E+00 | 5.2E-01 | 1.0E+00 | 6.5E+00 |
| **1,2-DICHLOROBENZENE** | **95-50-1** | ppbv | 5.0E+00 | 5.0E-01 | 1.0E+00 | 6.5E+00 |
| **1,2-DICHLOROETHANE** | **107-06-2** | ppbv | 4.9E+00 | 4.9E-01 | 1.0E+00 | 6.4E+00 |
| **1,2-DICHLOROPROPANE** | **78-87-5** | ppbv | 5.0E+00 | 4.3E-01 | 1.0E+00 | 6.4E+00 |
| **1,2-Dichlorotetrafluoroethane** | **76-14-2** | ppbv | 2.0E+01 | 2.0E+00 | 2.0E+00 | 2.4E+01 |
| **1,3,5-TRIMETHYLBENZENE** | **108-67-8** | ppbv | 5.1E+00 | 6.1E-01 | 1.0E+00 | 6.7E+00 |
| **1,3-DICHLOROBENZENE** | **541-73-1** | ppbv | 5.0E+00 | 5.0E-01 | 1.0E+00 | 6.5E+00 |
| **1,4-DICHLOROBENZENE** | **106-46-7** | ppbv | 5.0E+00 | 5.0E-01 | 1.0E+00 | 6.5E+00 |
| **1,4-DIOXANE** | **123-91-1** | ppbv | 1.0E+02 | 1.0E+01 | 1.0E+01 | 1.2E+02 |
| **2-HEXANONE** | **591-78-6** | ppbv | 1.5E+01 | 1.5E+00 | 2.0E+00 | 1.8E+01 |
| **4-ETHYLTOLUENE** | **622-96-8** | ppbv | 5.1E+00 | 6.1E-01 | 1.0E+00 | 6.7E+00 |
| **ACETONE** | **67-64-1** | ppbv | 2.0E+01 | 3.8E+00 | 4.0E+00 | 2.8E+01 |
| **BENZENE** | **71-43-2** | ppbv | 5.0E+00 | 6.3E-01 | 1.0E+00 | 6.6E+00 |
| **BENZYL CHLORIDE** | **100-44-7** | ppbv | 1.5E+01 | 1.5E+00 | 2.0E+00 | 1.9E+01 |
| **BROMODICHLOROMETHANE** | **75-27-4** | ppbv | 5.1E+00 | 4.5E-01 | 1.0E+00 | 6.5E+00 |
| **BROMOFORM** | **75-25-2** | ppbv | 5.0E+00 | 4.8E-01 | 1.0E+00 | 6.5E+00 |
| **BROMOMETHANE** | **74-83-9** | ppbv | 4.9E+00 | 5.2E-01 | 1.0E+00 | 6.4E+00 |
| **CARBON DISULFIDE** | **75-15-0** | ppbv | 2.0E+01 | 1.9E+00 | 2.0E+00 | 2.4E+01 |
| **CARBON TETRACHLORIDE** | **56-23-5** | ppbv | 4.9E+00 | 4.8E-01 | 1.0E+00 | 6.4E+00 |
| **CHLOROBENZENE** | **108-90-7** | ppbv | 5.0E+00 | 4.3E-01 | 1.0E+00 | 6.4E+00 |
| **CHLOROETHANE** | **75-00-3** | ppbv | 4.9E+00 | 3.8E-01 | 1.0E+00 | 6.3E+00 |
| **CHLOROFORM** | **67-66-3** | ppbv | 4.9E+00 | 4.1E-01 | 1.0E+00 | 6.3E+00 |
| **CHLOROMETHANE** | **74-87-3** | ppbv | 4.8E+00 | 4.8E-01 | 1.0E+00 | 6.3E+00 |
| **CIS-1,2-DICHLOROETHENE** | **156-59-2** | ppbv | 5.0E+00 | 5.0E-01 | 1.0E+00 | 6.5E+00 |
| **CIS-1,3-DICHLOROPROPENE** | **10061-01-5** | ppbv | 5.1E+00 | 4.4E-01 | 1.0E+00 | 6.5E+00 |
| **DIBROMOCHLOROMETHANE** | **124-48-1** | ppbv | 5.0E+00 | 4.7E-01 | 1.0E+00 | 6.5E+00 |
| **ETHYLBENZENE** | **100-41-4** | ppbv | 5.1E+00 | 4.6E-01 | 1.0E+00 | 6.5E+00 |
| **Freon 11** | **75-69-4** | ppbv | 5.7E+01 | 2.0E+01 | 2.0E+01 | 9.7E+01 |
| **Freon 113** | **76-13-1** | ppbv | 3.7E+02 | 9.5E+01 | 9.5E+01 | 5.6E+02 |
| **Freon 12** | **75-71-8** | ppbv | 5.1E+00 | 8.1E-01 | 1.0E+00 | 6.9E+00 |
| **HEXACHLOROBUTADIENE** | **87-68-3** | ppbv | 1.5E+01 | 1.5E+00 | 2.0E+00 | 1.9E+01 |
| **HEXANE (N-HEXANE)** | **110-54-3** | ppbv | 2.0E+01 | 2.0E+00 | 2.0E+00 | 2.4E+01 |
| **ISOPROPYL ALCOHOL (ISOPROPANOL)** | **67-63-0** | ppbv | 4.9E+01 | 4.9E+00 | 5.0E+00 | 5.9E+01 |
| **m,p-Xylene** | **1330-20-7** | ppbv | 2.0E+01 | 2.1E+00 | 2.0E+00 | 2.4E+01 |
| **Methyl ethyl ketone** | **78-93-3** | ppbv | 1.5E+01 | 1.4E+00 | 2.0E+00 | 1.8E+01 |
| **METHYL ISOBUTYL KETONE** | **108-10-1** | ppbv | 1.5E+01 | 1.5E+00 | 2.0E+00 | 1.8E+01 |
| **METHYL TERT-BUTYL ETHER** | **1634-04-4** | ppbv | 2.0E+01 | 1.9E+00 | 2.0E+00 | 2.4E+01 |
| **METHYLENE CHLORIDE** | **75-09-2** | ppbv | 4.9E+01 | 4.9E+00 | 5.0E+00 | 5.9E+01 |
| **O-XYLENE** | **95-47-6** | ppbv | 5.1E+00 | 4.6E-01 | 1.0E+00 | 6.5E+00 |
| **STYRENE** | **100-42-5** | ppbv | 1.5E+01 | 1.4E+00 | 2.0E+00 | 1.8E+01 |
| **Tetrachloroethene (PCE)** | **127-18-4** | ppbv | 1.4E+02 | 4.1E+01 | 4.2E+01 | 2.2E+02 |
| **TOLUENE** | **108-88-3** | ppbv | 5.0E+00 | 5.3E-01 | 1.0E+00 | 6.6E+00 |
| **TRANS-1,2-DICHLOROETHENE** | **156-60-5** | ppbv | 5.0E+00 | 5.0E-01 | 1.0E+00 | 6.5E+00 |
| **TRANS-1,3-DICHLOROPROPENE** | **10061-02-6** | ppbv | 9.9E+00 | 1.1E+00 | 1.0E+00 | 1.2E+01 |
| **Trichloroethene (TCE)** | **79-01-6** | ppbv | 5.0E+00 | 1.1E+00 | 1.0E+00 | 7.1E+00 |
| **VINYL ACETATE** | **108-05-4** | ppbv | 2.0E+01 | 2.0E+00 | 2.0E+00 | 2.4E+01 |
| **VINYL CHLORIDE** | **75-01-4** | ppbv | 5.1E+00 | 3.9E-01 | 1.0E+00 | 6.5E+00 |

**Omega Chemical Site**
**Full Scale On Site Soils Remedy**
**Preliminary Design Report**
**Influent Estimate Detail for Well:** VE-21S
**Basis for Estimated Concentrations:** VE-21S

Performed by JTB Date 10/2/2012
Checked by IL Date 10/10/2012

See Notes on Summary Tab

| Sum of NumericResult2 | | | SampleLocation | SampBegDepth | SampEndDepth | Date | |
|---|---|---|---|---|---|---|---|
| | | | VE-21S (blank) (blank) | | | | Overall Average |
| Parameter | CAS | Units2 | 6/5/2012 16:48 | 7/3/2012 13:07 | 7/8/2012 6:05 | 7/9/2012 19:54 | |
| 1,1,1-Trichloroethane (TCA) | 71-55-6 | ppbv | 4.9E+00 | 2.6E+00 | 3.0E+00 | | 1.1E+01 |
| 1,1,2,2-TETRACHLOROETHANE | 79-34-5 | ppbv | 1.0E+01 | 5.0E+00 | 5.0E+00 | | 2.0E+01 |
| 1,1,2-TRICHLOROETHANE | 79-00-5 | ppbv | 4.9E+00 | 2.6E+00 | 3.0E+00 | | 1.1E+01 |
| 1,1-DICHLOROETHANE | 75-34-3 | ppbv | 4.9E+00 | 2.5E+00 | 3.0E+00 | | 1.0E+01 |
| 1,1-DICHLOROETHENE | 75-35-4 | ppbv | 4.8E+02 | 2.2E+02 | 2.2E+02 | | 9.2E+02 |
| 1,2,4-TRICHLOROBENZENE | 120-82-1 | ppbv | 2.0E+01 | 1.0E+01 | 1.0E+01 | | 4.0E+01 |
| 1,2,4-TRIMETHYLBENZENE | 95-63-6 | ppbv | 1.5E+01 | 7.5E+00 | 8.0E+00 | | 3.1E+01 |
| 1,2-Dibromoethane (EDB) | 106-93-4 | ppbv | 4.9E+00 | 2.5E+00 | 3.0E+00 | | 1.0E+01 |
| 1,2-DICHLOROBENZENE | 95-50-1 | ppbv | 5.0E+00 | 2.5E+00 | 3.0E+00 | | 1.0E+01 |
| 1,2-DICHLOROETHANE | 107-06-2 | ppbv | 6.2E+00 | 2.5E+00 | 3.0E+00 | | 1.2E+01 |
| 1,2-DICHLOROPROPANE | 78-87-5 | ppbv | 5.0E+00 | 2.6E+00 | 3.0E+00 | | 1.1E+01 |
| 1,2-Dichlorotetrafluoroethane | 76-14-2 | ppbv | 2.0E+01 | 1.0E+01 | 1.0E+01 | | 4.0E+01 |
| 1,3,5-TRIMETHYLBENZENE | 108-67-8 | ppbv | 5.1E+00 | 2.4E+00 | 3.0E+00 | | 1.1E+01 |
| 1,3-DICHLOROBENZENE | 541-73-1 | ppbv | 5.0E+00 | 2.5E+00 | 3.0E+00 | | 1.0E+01 |
| 1,4-DICHLOROBENZENE | 106-46-7 | ppbv | 5.0E+00 | 2.5E+00 | 3.0E+00 | | 1.0E+01 |
| 1,4-DIOXANE | 123-91-1 | ppbv | 1.0E+02 | 5.0E+01 | 5.0E+01 | | 2.0E+02 |
| 2-HEXANONE | 591-78-6 | ppbv | 1.5E+01 | 7.6E+00 | 8.0E+00 | | 3.0E+01 |
| 4-ETHYLTOLUENE | 622-96-8 | ppbv | 5.1E+00 | 2.4E+00 | 3.0E+00 | | 1.1E+01 |
| ACETONE | 67-64-1 | ppbv | 2.0E+01 | 1.0E+01 | 1.0E+01 | | 4.0E+01 |
| BENZENE | 71-43-2 | ppbv | 5.0E+00 | 2.5E+00 | 3.0E+00 | | 1.1E+01 |
| BENZYL CHLORIDE | 100-44-7 | ppbv | 1.5E+01 | 7.5E+00 | 8.0E+00 | | 3.1E+01 |
| BROMODICHLOROMETHANE | 75-27-4 | ppbv | 5.1E+00 | 2.5E+00 | 3.0E+00 | | 1.1E+01 |
| BROMOFORM | 75-25-2 | ppbv | 5.0E+00 | 2.5E+00 | 3.0E+00 | | 1.1E+01 |
| BROMOMETHANE | 74-83-9 | ppbv | 4.9E+00 | 2.6E+00 | 3.0E+00 | | 1.0E+01 |
| CARBON DISULFIDE | 75-15-0 | ppbv | 2.0E+01 | 1.0E+01 | 1.0E+01 | | 4.0E+01 |
| CARBON TETRACHLORIDE | 56-23-5 | ppbv | 4.9E+00 | 2.5E+00 | 3.0E+00 | | 1.0E+01 |
| CHLOROBENZENE | 108-90-7 | ppbv | 5.0E+00 | 2.6E+00 | 3.0E+00 | | 1.1E+01 |
| CHLOROETHANE | 75-00-3 | ppbv | 4.9E+00 | 2.7E+00 | 3.0E+00 | | 1.1E+01 |
| CHLOROFORM | 67-66-3 | ppbv | 4.5E+01 | 1.9E+01 | 1.9E+01 | | 8.3E+01 |
| CHLOROMETHANE | 74-87-3 | ppbv | 4.8E+00 | 2.4E+00 | 3.0E+00 | | 1.0E+01 |
| CIS-1,2-DICHLOROETHENE | 156-59-2 | ppbv | 5.0E+00 | 2.5E+00 | 3.0E+00 | | 1.1E+01 |
| CIS-1,3-DICHLOROPROPENE | 10061-01-5 | ppbv | 5.1E+00 | 2.4E+00 | 3.0E+00 | | 1.0E+01 |
| DIBROMOCHLOROMETHANE | 124-48-1 | ppbv | 5.0E+00 | 2.5E+00 | 3.0E+00 | | 1.1E+01 |
| ETHYLBENZENE | 100-41-4 | ppbv | 5.1E+00 | 2.5E+00 | 3.0E+00 | | 1.1E+01 |
| Freon 11 | 75-69-4 | ppbv | 8.4E+01 | 6.1E+01 | 6.0E+01 | | 2.0E+02 |
| Freon 113 | 76-13-1 | ppbv | 4.2E+02 | 2.7E+02 | 2.8E+02 | | 9.7E+02 |
| Freon 12 | 75-71-8 | ppbv | 5.1E+00 | 2.4E+00 | 3.0E+00 | | 1.0E+01 |
| HEXACHLOROBUTADIENE | 87-68-3 | ppbv | 1.5E+01 | 7.5E+00 | 8.0E+00 | | 3.1E+01 |
| HEXANE (N-HEXANE) | 110-54-3 | ppbv | 2.0E+01 | 9.9E+00 | 1.0E+01 | | 4.0E+01 |
| ISOPROPYL ALCOHOL (ISOPROPANOL) | 67-63-0 | ppbv | 4.9E+01 | 2.5E+01 | 2.5E+01 | | 9.9E+01 |
| m,p-Xylene | 1330-20-7 | ppbv | 2.0E+01 | 9.9E+00 | 1.0E+01 | | 4.0E+01 |
| Methyl ethyl ketone | 78-93-3 | ppbv | 1.5E+01 | 7.5E+00 | 8.0E+00 | | 3.0E+01 |
| METHYL ISOBUTYL KETONE | 108-10-1 | ppbv | 1.5E+01 | 7.6E+00 | 8.0E+00 | | 3.0E+01 |
| METHYL TERT-BUTYL ETHER | 1634-04-4 | ppbv | 2.0E+01 | 1.0E+01 | 1.0E+01 | | 4.0E+01 |
| METHYLENE CHLORIDE | 75-09-2 | ppbv | 4.9E+01 | 2.5E+01 | 2.5E+01 | | 9.9E+01 |
| O-XYLENE | 95-47-6 | ppbv | 5.1E+00 | 2.5E+00 | 3.0E+00 | | 1.1E+01 |
| STYRENE | 100-42-5 | ppbv | 1.5E+01 | 7.5E+00 | 8.0E+00 | | 3.1E+01 |
| Tetrachloroethene (PCE) | 127-18-4 | ppbv | 1.9E+03 | 8.1E+02 | | 8.1E+02 | 3.5E+03 |
| TOLUENE | 108-88-3 | ppbv | 5.0E+00 | 2.4E+00 | 3.0E+00 | | 1.0E+01 |
| TRANS-1,2-DICHLOROETHENE | 156-60-5 | ppbv | 5.0E+00 | 2.5E+00 | 3.0E+00 | | 1.1E+01 |
| TRANS-1,3-DICHLOROPROPENE | 10061-02-6 | ppbv | 9.9E+00 | 5.1E+00 | 5.0E+00 | | 2.0E+01 |
| Trichloroethene (TCE) | 79-01-6 | ppbv | 1.5E+02 | 7.8E+01 | 7.8E+01 | | 3.0E+02 |
| VINYL ACETATE | 108-05-4 | ppbv | 2.0E+01 | 9.9E+00 | 1.0E+01 | | 4.0E+01 |
| VINYL CHLORIDE | 75-01-4 | ppbv | 5.1E+00 | 2.3E+00 | 3.0E+00 | | 1.0E+01 |

**Omega Chemical Site**
**Full Scale On Site Soils Remedy**
**Preliminary Design Report**
**Influent Estimate Detail for Well:** VE-22S
**Basis for Estimated Concentrations:** VE-22S

Performed by JTB Date 10/2/2012
Checked by IL Date 10/10/2012

See Notes on Summary Tab

| Sum of NumericResult2 | | | SampleLocation | SampBegDepth | SampEndDepth | Date | |
|---|---|---|---|---|---|---|---|
| | | | VE-22S (blank) (blank) | | | | Overall Average |
| Parameter | CAS | Units2 | 6/5/2012 16:53 | 7/3/2012 13:12 | 7/8/2012 6:49 | 7/9/2012 20:42 | |
| 1,1,1-Trichloroethane (TCA) | 71-55-6 | ppbv | 2.0E+01 | 1.0E+01 | 1.0E+01 | | 4.0E+01 |
| 1,1,2,2-TETRACHLOROETHANE | 79-34-5 | ppbv | 3.9E+01 | 2.0E+01 | 2.0E+01 | | 8.0E+01 |
| 1,1,2-TRICHLOROETHANE | 79-00-5 | ppbv | 2.0E+01 | 1.0E+01 | 1.0E+01 | | 4.0E+01 |
| 1,1-DICHLOROETHANE | 75-34-3 | ppbv | 2.7E+01 | 1.7E+01 | 1.7E+01 | | 6.1E+01 |
| 1,1-DICHLOROETHENE | 75-35-4 | ppbv | 2.5E+03 | 1.4E+03 | 1.4E+03 | | 5.3E+03 |
| 1,2,4-TRICHLOROBENZENE | 120-82-1 | ppbv | 7.9E+01 | 4.0E+01 | 4.0E+01 | | 1.6E+02 |
| 1,2,4-TRIMETHYLBENZENE | 95-63-6 | ppbv | 5.9E+01 | 3.1E+01 | 3.0E+01 | | 1.2E+02 |
| 1,2-Dibromoethane (EDB) | 106-93-4 | ppbv | 2.0E+01 | 1.0E+01 | 1.0E+01 | | 4.0E+01 |
| 1,2-DICHLOROBENZENE | 95-50-1 | ppbv | 2.0E+01 | 1.0E+01 | 1.0E+01 | | 4.0E+01 |
| 1,2-DICHLOROETHANE | 107-06-2 | ppbv | 2.0E+01 | 1.6E+01 | 1.6E+01 | | 5.2E+01 |
| 1,2-DICHLOROPROPANE | 78-87-5 | ppbv | 2.0E+01 | 1.0E+01 | 1.0E+01 | | 4.0E+01 |
| 1,2-Dichlorotetrafluoroethane | 76-14-2 | ppbv | 8.0E+01 | 4.0E+01 | 4.0E+01 | | 1.6E+02 |
| 1,3,5-TRIMETHYLBENZENE | 108-67-8 | ppbv | 2.0E+01 | 1.0E+01 | 1.0E+01 | | 4.0E+01 |
| 1,3-DICHLOROBENZENE | 541-73-1 | ppbv | 2.0E+01 | 1.0E+01 | 1.0E+01 | | 4.0E+01 |
| 1,4-DICHLOROBENZENE | 106-46-7 | ppbv | 2.0E+01 | 1.0E+01 | 1.0E+01 | | 4.0E+01 |
| 1,4-DIOXANE | 123-91-1 | ppbv | 3.9E+02 | 2.0E+02 | 2.0E+02 | | 7.9E+02 |
| 2-HEXANONE | 591-78-6 | ppbv | 6.1E+01 | 2.9E+01 | 3.0E+01 | | 1.2E+02 |
| 4-ETHYLTOLUENE | 622-96-8 | ppbv | 2.0E+01 | 1.0E+01 | 1.0E+01 | | 4.0E+01 |
| ACETONE | 67-64-1 | ppbv | 8.0E+01 | 4.0E+01 | 4.0E+01 | | 1.6E+02 |
| BENZENE | 71-43-2 | ppbv | 2.0E+01 | 1.0E+01 | 1.0E+01 | | 4.0E+01 |
| BENZYL CHLORIDE | 100-44-7 | ppbv | 6.0E+01 | 3.1E+01 | 3.0E+01 | | 1.2E+02 |
| BROMODICHLOROMETHANE | 75-27-4 | ppbv | 1.9E+01 | 1.0E+01 | 1.0E+01 | | 3.9E+01 |
| BROMOFORM | 75-25-2 | ppbv | 2.0E+01 | 9.7E+00 | 1.0E+01 | | 4.0E+01 |
| BROMOMETHANE | 74-83-9 | ppbv | 2.0E+01 | 1.0E+01 | 1.0E+01 | | 4.0E+01 |
| CARBON DISULFIDE | 75-15-0 | ppbv | 8.0E+01 | 3.9E+01 | 4.0E+01 | | 1.6E+02 |
| CARBON TETRACHLORIDE | 56-23-5 | ppbv | 2.1E+01 | 1.0E+01 | 1.0E+01 | | 4.1E+01 |
| CHLOROBENZENE | 108-90-7 | ppbv | 2.0E+01 | 1.0E+01 | 1.0E+01 | | 4.0E+01 |
| CHLOROETHANE | 75-00-3 | ppbv | 2.0E+01 | 9.9E+00 | 1.0E+01 | | 4.0E+01 |
| CHLOROFORM | 67-66-3 | ppbv | 4.3E+02 | 3.1E+02 | 3.1E+02 | | 1.0E+03 |
| CHLOROMETHANE | 74-87-3 | ppbv | 2.0E+01 | 1.0E+01 | 1.0E+01 | | 4.0E+01 |
| CIS-1,2-DICHLOROETHENE | 156-59-2 | ppbv | 2.0E+01 | 1.0E+01 | 1.0E+01 | | 4.0E+01 |
| CIS-1,3-DICHLOROPROPENE | 10061-01-5 | ppbv | 2.0E+01 | 9.9E+00 | 1.0E+01 | | 4.0E+01 |
| DIBROMOCHLOROMETHANE | 124-48-1 | ppbv | 2.0E+01 | 1.0E+01 | 1.0E+01 | | 4.0E+01 |
| ETHYLBENZENE | 100-41-4 | ppbv | 2.0E+01 | 9.9E+00 | 1.0E+01 | | 4.0E+01 |
| Freon 11 | 75-69-4 | ppbv | 5.5E+02 | 4.6E+02 | 4.7E+02 | | 1.5E+03 |
| Freon 113 | 76-13-1 | ppbv | 2.9E+03 | 1.8E+03 | 1.8E+03 | | 6.5E+03 |
| Freon 12 | 75-71-8 | ppbv | 2.0E+01 | 9.9E+00 | 1.0E+01 | | 4.0E+01 |
| HEXACHLOROBUTADIENE | 87-68-3 | ppbv | 6.0E+01 | 3.0E+01 | 3.0E+01 | | 1.2E+02 |
| HEXANE (N-HEXANE) | 110-54-3 | ppbv | 7.9E+01 | 4.0E+01 | 4.0E+01 | | 1.6E+02 |
| ISOPROPYL ALCOHOL (ISOPROPANOL) | 67-63-0 | ppbv | 2.0E+02 | 1.0E+02 | 1.0E+02 | | 4.0E+02 |
| m,p-Xylene | 1330-20-7 | ppbv | 8.1E+01 | 3.9E+01 | 4.0E+01 | | 1.6E+02 |
| Methyl ethyl ketone | 78-93-3 | ppbv | 6.1E+01 | 3.0E+01 | 3.0E+01 | | 1.2E+02 |
| METHYL ISOBUTYL KETONE | 108-10-1 | ppbv | 6.1E+01 | 2.9E+01 | 3.0E+01 | | 1.2E+02 |
| METHYL TERT-BUTYL ETHER | 1634-04-4 | ppbv | 8.0E+01 | 3.9E+01 | 4.0E+01 | | 1.6E+02 |
| METHYLENE CHLORIDE | 75-09-2 | ppbv | 2.0E+02 | 1.0E+02 | 1.0E+02 | | 4.0E+02 |
| O-XYLENE | 95-47-6 | ppbv | 2.0E+01 | 9.9E+00 | 1.0E+01 | | 4.0E+01 |
| STYRENE | 100-42-5 | ppbv | 6.1E+01 | 3.1E+01 | 3.0E+01 | | 1.2E+02 |
| Tetrachloroethene (PCE) | 127-18-4 | ppbv | 1.2E+04 | 7.1E+03 | | 7.1E+03 | 2.6E+04 |
| TOLUENE | 108-88-3 | ppbv | 2.0E+01 | 1.0E+01 | 1.0E+01 | | 4.0E+01 |
| TRANS-1,2-DICHLOROETHENE | 156-60-5 | ppbv | 2.0E+01 | 1.0E+01 | 1.0E+01 | | 4.0E+01 |
| TRANS-1,3-DICHLOROPROPENE | 10061-02-6 | ppbv | 4.0E+01 | 2.0E+01 | 2.0E+01 | | 8.0E+01 |
| Trichloroethene (TCE) | 79-01-6 | ppbv | 7.3E+02 | 5.8E+02 | 5.7E+02 | | 1.9E+03 |
| VINYL ACETATE | 108-05-4 | ppbv | 8.0E+01 | 4.0E+01 | 4.0E+01 | | 1.6E+02 |
| VINYL CHLORIDE | 75-01-4 | ppbv | 2.0E+01 | 1.0E+01 | 1.0E+01 | | 4.0E+01 |

**Omega Chemical Site**
**Full Scale On Site Soils Remedy**
**Preliminary Design Report**
**Influent Estimate Detail for Well:** VE-23S
**Basis for Estimated Concentrations:** VE-23S

Performed by JTB Date 10/2/2012
Checked by IL Date 10/10/2012

See Notes on Summary Tab

| Sum of NumericResult2 | | | SampleLocation | SampBegDepth | SampEndDepth | Date | |
|---|---|---|---|---|---|---|---|
| | | | VE-23S (blank) (blank) | | | | Overall Average |
| Parameter | CAS | Units2 | 6/5/2012 16:58 | 7/3/2012 13:17 | 7/8/2012 7:43 | 7/9/2012 21:27 | |
| 1,1,1-Trichloroethane (TCA) | 71-55-6 | ppbv | 4.9E+00 | 5.5E-01 | 1.0E+00 | | 6.5E+00 |
| 1,1,2,2-TETRACHLOROETHANE | 79-34-5 | ppbv | 1.0E+01 | 1.2E+00 | 1.0E+00 | | 1.2E+01 |
| 1,1,2-TRICHLOROETHANE | 79-00-5 | ppbv | 4.9E+00 | 5.5E-01 | 1.0E+00 | | 6.5E+00 |
| 1,1-DICHLOROETHANE | 75-34-3 | ppbv | 4.9E+00 | 9.9E-01 | 1.0E+00 | | 6.9E+00 |
| 1,1-DICHLOROETHENE | 75-35-4 | ppbv | 1.1E+02 | 6.6E+01 | 6.5E+01 | | 2.4E+02 |
| 1,2,4-TRICHLOROBENZENE | 120-82-1 | ppbv | 2.0E+01 | 2.3E+00 | 2.0E+00 | | 2.4E+01 |
| 1,2,4-TRIMETHYLBENZENE | 95-63-6 | ppbv | 1.5E+01 | 1.6E+00 | 2.0E+00 | | 1.9E+01 |
| 1,2-Dibromoethane (EDB) | 106-93-4 | ppbv | 4.9E+00 | 5.2E-01 | 1.0E+00 | | 6.5E+00 |
| 1,2-DICHLOROBENZENE | 95-50-1 | ppbv | 5.0E+00 | 5.0E-01 | 1.0E+00 | | 6.5E+00 |
| 1,2-DICHLOROETHANE | 107-06-2 | ppbv | 4.9E+00 | 2.0E+00 | 2.0E+00 | | 8.9E+00 |
| 1,2-DICHLOROPROPANE | 78-87-5 | ppbv | 5.0E+00 | 6.5E-01 | 1.0E+00 | | 6.6E+00 |
| 1,2-Dichlorotetrafluoroethane | 76-14-2 | ppbv | 2.0E+01 | 2.3E+00 | 2.0E+00 | | 2.4E+01 |
| 1,3,5-TRIMETHYLBENZENE | 108-67-8 | ppbv | 5.1E+00 | 6.1E-01 | 1.0E+00 | | 6.7E+00 |
| 1,3-DICHLOROBENZENE | 541-73-1 | ppbv | 5.0E+00 | 5.0E-01 | 1.0E+00 | | 6.5E+00 |
| 1,4-DICHLOROBENZENE | 106-46-7 | ppbv | 5.0E+00 | 5.0E-01 | 1.0E+00 | | 6.5E+00 |
| 1,4-DIOXANE | 123-91-1 | ppbv | 1.0E+02 | 1.1E+01 | 1.1E+01 | | 1.2E+02 |
| 2-HEXANONE | 591-78-6 | ppbv | 1.5E+01 | 1.7E+00 | 2.0E+00 | | 1.9E+01 |
| 4-ETHYLTOLUENE | 622-96-8 | ppbv | 5.1E+00 | 6.1E-01 | 1.0E+00 | | 6.7E+00 |
| ACETONE | 67-64-1 | ppbv | 2.0E+01 | 2.5E+00 | 3.0E+00 | | 2.6E+01 |
| BENZENE | 71-43-2 | ppbv | 1.3E+01 | 6.3E-01 | 1.0E+00 | | 1.4E+01 |
| BENZYL CHLORIDE | 100-44-7 | ppbv | 1.5E+01 | 1.7E+00 | 2.0E+00 | | 1.9E+01 |
| BROMODICHLOROMETHANE | 75-27-4 | ppbv | 5.1E+00 | 6.0E-01 | 1.0E+00 | | 6.7E+00 |
| BROMOFORM | 75-25-2 | ppbv | 5.0E+00 | 5.8E-01 | 1.0E+00 | | 6.6E+00 |
| BROMOMETHANE | 74-83-9 | ppbv | 4.9E+00 | 5.2E-01 | 1.0E+00 | | 6.4E+00 |
| CARBON DISULFIDE | 75-15-0 | ppbv | 2.0E+01 | 2.2E+00 | 2.0E+00 | | 2.4E+01 |
| CARBON TETRACHLORIDE | 56-23-5 | ppbv | 4.9E+00 | 6.4E-01 | 1.0E+00 | | 6.6E+00 |
| CHLOROBENZENE | 108-90-7 | ppbv | 5.0E+00 | 6.5E-01 | 1.0E+00 | | 6.6E+00 |
| CHLOROETHANE | 75-00-3 | ppbv | 4.9E+00 | 7.6E-01 | 1.0E+00 | | 6.7E+00 |
| CHLOROFORM | 67-66-3 | ppbv | 2.3E+01 | 1.7E+01 | 1.7E+01 | | 5.6E+01 |
| CHLOROMETHANE | 74-87-3 | ppbv | 4.8E+00 | 4.8E-01 | 1.0E+00 | | 6.3E+00 |
| CIS-1,2-DICHLOROETHENE | 156-59-2 | ppbv | 5.0E+00 | 5.0E-01 | 1.0E+00 | | 6.5E+00 |
| CIS-1,3-DICHLOROPROPENE | 10061-01-5 | ppbv | 5.1E+00 | 6.6E-01 | 1.0E+00 | | 6.7E+00 |
| DIBROMOCHLOROMETHANE | 124-48-1 | ppbv | 5.0E+00 | 5.9E-01 | 1.0E+00 | | 6.6E+00 |
| ETHYLBENZENE | 100-41-4 | ppbv | 5.1E+00 | 4.6E-01 | 1.0E+00 | | 6.5E+00 |
| Freon 11 | 75-69-4 | ppbv | 1.3E+01 | 1.1E+01 | 1.1E+01 | | 3.5E+01 |
| Freon 113 | 76-13-1 | ppbv | 2.9E+01 | 3.0E+01 | 3.0E+01 | | 8.9E+01 |
| Freon 12 | 75-71-8 | ppbv | 5.1E+00 | 6.1E-01 | 1.0E+00 | | 6.7E+00 |
| HEXACHLOROBUTADIENE | 87-68-3 | ppbv | 1.5E+01 | 1.7E+00 | 2.0E+00 | | 1.9E+01 |
| HEXANE (N-HEXANE) | 110-54-3 | ppbv | 2.0E+01 | 2.3E+00 | 2.0E+00 | | 2.4E+01 |
| ISOPROPYL ALCOHOL (ISOPROPANOL) | 67-63-0 | ppbv | 4.9E+01 | 5.7E+00 | 6.0E+00 | | 6.1E+01 |
| m,p-Xylene | 1330-20-7 | ppbv | 2.0E+01 | 2.3E+00 | 2.0E+00 | | 2.4E+01 |
| Methyl ethyl ketone | 78-93-3 | ppbv | 1.5E+01 | 1.7E+00 | 2.0E+00 | | 1.9E+01 |
| METHYL ISOBUTYL KETONE | 108-10-1 | ppbv | 1.5E+01 | 1.7E+00 | 2.0E+00 | | 1.9E+01 |
| METHYL TERT-BUTYL ETHER | 1634-04-4 | ppbv | 2.0E+01 | 2.2E+00 | 2.0E+00 | | 2.4E+01 |
| METHYLENE CHLORIDE | 75-09-2 | ppbv | 4.9E+01 | 5.5E+00 | 6.0E+00 | | 6.0E+01 |
| O-XYLENE | 95-47-6 | ppbv | 5.1E+00 | 4.6E-01 | 1.0E+00 | | 6.5E+00 |
| STYRENE | 100-42-5 | ppbv | 1.5E+01 | 1.6E+00 | 2.0E+00 | | 1.9E+01 |
| Tetrachloroethene (PCE) | 127-18-4 | ppbv | 4.7E+02 | 2.8E+02 | | 2.8E+02 | 1.0E+03 |
| TOLUENE | 108-88-3 | ppbv | 5.0E+00 | 5.3E-01 | 1.0E+00 | | 6.6E+00 |
| TRANS-1,2-DICHLOROETHENE | 156-60-5 | ppbv | 5.0E+00 | 5.0E-01 | 1.0E+00 | | 6.5E+00 |
| TRANS-1,3-DICHLOROPROPENE | 10061-02-6 | ppbv | 9.9E+00 | 1.1E+00 | 1.0E+00 | | 1.2E+01 |
| Trichloroethene (TCE) | 79-01-6 | ppbv | 4.1E+01 | 2.8E+01 | 2.7E+01 | | 9.6E+01 |
| VINYL ACETATE | 108-05-4 | ppbv | 2.0E+01 | 2.3E+00 | 2.0E+00 | | 2.4E+01 |
| VINYL CHLORIDE | 75-01-4 | ppbv | 5.1E+00 | 3.9E-01 | 1.0E+00 | | 6.5E+00 |

**Omega Chemical Site**
**Full Scale On Site Soils Remedy**
**Preliminary Design Report**
**Influent Estimate Detail for Well:** VE-24S
**Basis for Estimated Concentrations:** VE-24S

Performed by JTB Date 10/2/2012
Checked by IL Date 10/10/2012

See Notes on Summary Tab

| Sum of NumericResult2 | | | SampleLocation | SampBegDepth | SampEndDepth | Date | |
|---|---|---|---|---|---|---|---|
| | | | VE-24S (blank) (blank) | | | | Overall Average |
| Parameter | CAS | Units2 | 6/5/2012 17:03 | 7/3/2012 13:22 | 7/8/2012 8:37 | 7/9/2012 22:13 | |
| 1,1,1-Trichloroethane (TCA) | 71-55-6 | ppbv | 4.9E+00 | 5.5E-01 | 1.0E+00 | | 6.5E+00 |
| 1,1,2,2-TETRACHLOROETHANE | 79-34-5 | ppbv | 1.0E+01 | 1.0E+00 | 1.0E+00 | | 1.2E+01 |
| 1,1,2-TRICHLOROETHANE | 79-00-5 | ppbv | 4.9E+00 | 5.5E-01 | 1.0E+00 | | 6.5E+00 |
| 1,1-DICHLOROETHANE | 75-34-3 | ppbv | 4.9E+00 | 4.9E-01 | 1.0E+00 | | 6.4E+00 |
| 1,1-DICHLOROETHENE | 75-35-4 | ppbv | 4.8E+02 | 3.8E+02 | | 3.8E+02 | 1.2E+03 |
| 1,2,4-TRICHLOROBENZENE | 120-82-1 | ppbv | 2.0E+01 | 2.0E+00 | 2.0E+00 | | 2.4E+01 |
| 1,2,4-TRIMETHYLBENZENE | 95-63-6 | ppbv | 1.5E+01 | 1.6E+00 | 2.0E+00 | | 1.9E+01 |
| 1,2-Dibromoethane (EDB) | 106-93-4 | ppbv | 4.9E+00 | 5.2E-01 | 1.0E+00 | | 6.5E+00 |
| 1,2-DICHLOROBENZENE | 95-50-1 | ppbv | 5.0E+00 | 5.0E-01 | 1.0E+00 | | 6.5E+00 |
| 1,2-DICHLOROETHANE | 107-06-2 | ppbv | 4.9E+00 | 4.9E-01 | 1.0E+00 | | 6.4E+00 |
| 1,2-DICHLOROPROPANE | 78-87-5 | ppbv | 5.0E+00 | 4.3E-01 | 1.0E+00 | | 6.4E+00 |
| 1,2-Dichlorotetrafluoroethane | 76-14-2 | ppbv | 2.0E+01 | 2.1E+00 | 2.0E+00 | | 2.4E+01 |
| 1,3,5-TRIMETHYLBENZENE | 108-67-8 | ppbv | 5.1E+00 | 6.1E-01 | 1.0E+00 | | 6.7E+00 |
| 1,3-DICHLOROBENZENE | 541-73-1 | ppbv | 5.0E+00 | 5.0E-01 | 1.0E+00 | | 6.5E+00 |
| 1,4-DICHLOROBENZENE | 106-46-7 | ppbv | 5.0E+00 | 5.0E-01 | 1.0E+00 | | 6.5E+00 |
| 1,4-DIOXANE | 123-91-1 | ppbv | 1.0E+02 | 1.0E+01 | 1.0E+01 | | 1.2E+02 |
| 2-HEXANONE | 591-78-6 | ppbv | 1.5E+01 | 1.5E+00 | 2.0E+00 | | 1.8E+01 |
| 4-ETHYLTOLUENE | 622-96-8 | ppbv | 5.1E+00 | 6.1E-01 | 1.0E+00 | | 6.7E+00 |
| ACETONE | 67-64-1 | ppbv | 2.0E+01 | 2.1E+00 | 2.0E+00 | | 2.4E+01 |
| BENZENE | 71-43-2 | ppbv | 5.0E+00 | 6.3E-01 | 1.0E+00 | | 6.6E+00 |
| BENZYL CHLORIDE | 100-44-7 | ppbv | 1.5E+01 | 1.5E+00 | 2.0E+00 | | 1.9E+01 |
| BROMODICHLOROMETHANE | 75-27-4 | ppbv | 5.1E+00 | 6.0E-01 | 1.0E+00 | | 6.7E+00 |
| BROMOFORM | 75-25-2 | ppbv | 5.0E+00 | 4.8E-01 | 1.0E+00 | | 6.5E+00 |
| BROMOMETHANE | 74-83-9 | ppbv | 4.9E+00 | 5.2E-01 | 1.0E+00 | | 6.4E+00 |
| CARBON DISULFIDE | 75-15-0 | ppbv | 2.0E+01 | 2.2E+00 | 2.0E+00 | | 2.4E+01 |
| CARBON TETRACHLORIDE | 56-23-5 | ppbv | 4.9E+00 | 4.8E-01 | 1.0E+00 | | 6.4E+00 |
| CHLOROBENZENE | 108-90-7 | ppbv | 5.0E+00 | 4.3E-01 | 1.0E+00 | | 6.4E+00 |
| CHLOROETHANE | 75-00-3 | ppbv | 4.9E+00 | 3.8E-01 | 1.0E+00 | | 6.3E+00 |
| CHLOROFORM | 67-66-3 | ppbv | 6.1E+00 | 5.3E+00 | 5.0E+00 | | 1.6E+01 |
| CHLOROMETHANE | 74-87-3 | ppbv | 4.8E+00 | 4.8E-01 | 1.0E+00 | | 6.3E+00 |
| CIS-1,2-DICHLOROETHENE | 156-59-2 | ppbv | 5.0E+00 | 5.0E-01 | 1.0E+00 | | 6.5E+00 |
| CIS-1,3-DICHLOROPROPENE | 10061-01-5 | ppbv | 5.1E+00 | 4.4E-01 | 1.0E+00 | | 6.5E+00 |
| DIBROMOCHLOROMETHANE | 124-48-1 | ppbv | 5.0E+00 | 4.7E-01 | 1.0E+00 | | 6.5E+00 |
| ETHYLBENZENE | 100-41-4 | ppbv | 5.1E+00 | 4.6E-01 | 1.0E+00 | | 6.5E+00 |
| Freon 11 | 75-69-4 | ppbv | 9.6E+01 | 6.2E+01 | 6.3E+01 | | 2.2E+02 |
| Freon 113 | 76-13-1 | ppbv | 2.2E+02 | 1.4E+02 | | 1.4E+02 | 5.1E+02 |
| Freon 12 | 75-71-8 | ppbv | 5.1E+00 | 6.1E-01 | 1.0E+00 | | 6.7E+00 |
| HEXACHLOROBUTADIENE | 87-68-3 | ppbv | 1.5E+01 | 1.6E+00 | 2.0E+00 | | 1.9E+01 |
| HEXANE (N-HEXANE) | 110-54-3 | ppbv | 2.0E+01 | 2.0E+00 | 2.0E+00 | | 2.4E+01 |
| ISOPROPYL ALCOHOL (ISOPROPANOL) | 67-63-0 | ppbv | 4.9E+01 | 5.3E+00 | 5.0E+00 | | 5.9E+01 |
| m,p-Xylene | 1330-20-7 | ppbv | 2.0E+01 | 2.1E+00 | 2.0E+00 | | 2.4E+01 |
| Methyl ethyl ketone | 78-93-3 | ppbv | 1.5E+01 | 1.7E+00 | 2.0E+00 | | 1.9E+01 |
| METHYL ISOBUTYL KETONE | 108-10-1 | ppbv | 1.5E+01 | 1.5E+00 | 2.0E+00 | | 1.8E+01 |
| METHYL TERT-BUTYL ETHER | 1634-04-4 | ppbv | 2.0E+01 | 2.2E+00 | 2.0E+00 | | 2.4E+01 |
| METHYLENE CHLORIDE | 75-09-2 | ppbv | 4.9E+01 | 5.2E+00 | 5.0E+00 | | 5.9E+01 |
| O-XYLENE | 95-47-6 | ppbv | 5.1E+00 | 4.6E-01 | 1.0E+00 | | 6.5E+00 |
| STYRENE | 100-42-5 | ppbv | 1.5E+01 | 1.6E+00 | 2.0E+00 | | 1.9E+01 |
| Tetrachloroethene (PCE) | 127-18-4 | ppbv | 5.9E+02 | 5.0E+02 | | 5.0E+02 | 1.6E+03 |
| TOLUENE | 108-88-3 | ppbv | 5.0E+00 | 5.3E-01 | 1.0E+00 | | 6.6E+00 |
| TRANS-1,2-DICHLOROETHENE | 156-60-5 | ppbv | 5.0E+00 | 7.6E-01 | 1.0E+00 | | 6.8E+00 |
| TRANS-1,3-DICHLOROPROPENE | 10061-02-6 | ppbv | 9.9E+00 | 1.1E+00 | 1.0E+00 | | 1.2E+01 |
| Trichloroethene (TCE) | 79-01-6 | ppbv | 4.1E+01 | 3.5E+01 | 3.5E+01 | | 1.1E+02 |
| VINYL ACETATE | 108-05-4 | ppbv | 2.0E+01 | 2.0E+00 | 2.0E+00 | | 2.4E+01 |
| VINYL CHLORIDE | 75-01-4 | ppbv | 5.1E+00 | 3.9E-01 | 1.0E+00 | | 6.5E+00 |

**Omega Chemical Site**
**Full Scale On Site Soils Remedy**
**Preliminary Design Report**
**Influent Estimate Detail for Well:** VE-25S
**Basis for Estimated Concentrations:** VE-25S

Performed by JTB Date 10/2/2012
Checked by IL Date 10/10/2012

See Notes on Summary Tab

| Average of NumericResult2 | | | SampleLocation | SampBegDepth | SampEndDepth | Date | | |
|---|---|---|---|---|---|---|---|---|
| | | | VE-25S (blank) (blank) | | | | | Overall Average |
| Parameter | CAS | Units2 | 6/5/2012 17:08 | 7/3/2012 13:27 | 7/8/2012 9:29 | 7/9/2012 22:58 | 7/11/2012 3:34 | |
| 1,1,1-Trichloroethane (TCA) | 71-55-6 | ppbv | 4.9E+00 | 5.5E-01 | 1.0E+00 | | | 2.2E+00 |
| 1,1,2,2-TETRACHLOROETHANE | 79-34-5 | ppbv | 1.0E+01 | 1.0E+00 | 1.0E+00 | | | 4.0E+00 |
| 1,1,2-TRICHLOROETHANE | 79-00-5 | ppbv | 4.9E+00 | 5.5E-01 | 1.0E+00 | | | 2.2E+00 |
| 1,1-DICHLOROETHANE | 75-34-3 | ppbv | 1.5E+01 | 6.4E+00 | 6.0E+00 | | | 9.1E+00 |
| 1,1-DICHLOROETHENE | 75-35-4 | ppbv | 2.0E+02 | 8.3E+01 | 8.3E+01 | | | 1.2E+02 |
| 1,2,4-TRICHLOROBENZENE | 120-82-1 | ppbv | 2.0E+01 | 2.0E+00 | 2.0E+00 | | | 8.1E+00 |
| 1,2,4-TRIMETHYLBENZENE | 95-63-6 | ppbv | 1.5E+01 | 1.4E+00 | 2.0E+00 | | | 6.2E+00 |
| 1,2-Dibromoethane (EDB) | 106-93-4 | ppbv | 4.9E+00 | 5.2E-01 | 1.0E+00 | | | 2.2E+00 |
| 1,2-DICHLOROBENZENE | 95-50-1 | ppbv | 5.0E+00 | 5.0E-01 | 1.0E+00 | | | 2.2E+00 |
| 1,2-DICHLOROETHANE | 107-06-2 | ppbv | 1.3E+01 | 9.9E+00 | 1.0E+01 | | | 1.1E+01 |
| 1,2-DICHLOROPROPANE | 78-87-5 | ppbv | 5.0E+00 | 4.3E-01 | 1.0E+00 | | | 2.1E+00 |
| 1,2-Dichlorotetrafluoroethane | 76-14-2 | ppbv | 2.0E+01 | 2.0E+00 | 2.0E+00 | | | 8.0E+00 |
| 1,3,5-TRIMETHYLBENZENE | 108-67-8 | ppbv | 5.1E+00 | 6.1E-01 | 1.0E+00 | | | 2.2E+00 |
| 1,3-DICHLOROBENZENE | 541-73-1 | ppbv | 5.0E+00 | 5.0E-01 | 1.0E+00 | | | 2.2E+00 |
| 1,4-DICHLOROBENZENE | 106-46-7 | ppbv | 5.0E+00 | 5.0E-01 | 1.0E+00 | | | 2.2E+00 |
| 1,4-DIOXANE | 123-91-1 | ppbv | 1.0E+02 | 1.0E+01 | 1.0E+01 | | | 4.0E+01 |
| 2-HEXANONE | 591-78-6 | ppbv | 1.5E+01 | 1.5E+00 | 2.0E+00 | | | 6.1E+00 |
| 4-ETHYLTOLUENE | 622-96-8 | ppbv | 5.1E+00 | 6.1E-01 | 1.0E+00 | | | 2.2E+00 |
| ACETONE | 67-64-1 | ppbv | 2.0E+01 | 2.5E+00 | 2.0E+00 | | | 8.2E+00 |
| BENZENE | 71-43-2 | ppbv | 5.0E+00 | 1.6E+00 | 2.0E+00 | | | 2.9E+00 |
| BENZYL CHLORIDE | 100-44-7 | ppbv | 1.5E+01 | 1.5E+00 | 2.0E+00 | | | 6.2E+00 |
| BROMODICHLOROMETHANE | 75-27-4 | ppbv | 5.1E+00 | 4.5E-01 | 1.0E+00 | | | 2.2E+00 |
| BROMOFORM | 75-25-2 | ppbv | 5.0E+00 | 4.8E-01 | 1.0E+00 | | | 2.2E+00 |
| BROMOMETHANE | 74-83-9 | ppbv | 4.9E+00 | 5.2E-01 | 1.0E+00 | | | 2.1E+00 |
| CARBON DISULFIDE | 75-15-0 | ppbv | 2.0E+01 | 1.9E+00 | 2.0E+00 | | | 7.9E+00 |
| CARBON TETRACHLORIDE | 56-23-5 | ppbv | 4.9E+00 | 4.8E-01 | 1.0E+00 | | | 2.1E+00 |
| CHLOROBENZENE | 108-90-7 | ppbv | 5.0E+00 | 4.3E-01 | 1.0E+00 | | | 2.1E+00 |
| CHLOROETHANE | 75-00-3 | ppbv | 4.9E+00 | 3.8E-01 | 1.0E+00 | | | 2.1E+00 |
| CHLOROFORM | 67-66-3 | ppbv | 4.3E+02 | 2.3E+02 | | 2.3E+02 | | 3.0E+02 |
| CHLOROMETHANE | 74-87-3 | ppbv | 4.8E+00 | 4.8E-01 | 1.0E+00 | | | 2.1E+00 |
| CIS-1,2-DICHLOROETHENE | 156-59-2 | ppbv | 5.0E+00 | 2.8E+00 | 3.0E+00 | | | 3.6E+00 |
| CIS-1,3-DICHLOROPROPENE | 10061-01-5 | ppbv | 5.1E+00 | 4.4E-01 | 1.0E+00 | | | 2.2E+00 |
| DIBROMOCHLOROMETHANE | 124-48-1 | ppbv | 5.0E+00 | 4.7E-01 | 1.0E+00 | | | 2.2E+00 |
| ETHYLBENZENE | 100-41-4 | ppbv | 5.1E+00 | 4.6E-01 | 1.0E+00 | | | 2.2E+00 |
| Freon 11 | 75-69-4 | ppbv | 1.0E+01 | 2.5E+00 | 3.0E+00 | | | 5.2E+00 |
| Freon 113 | 76-13-1 | ppbv | 1.4E+01 | 5.6E+00 | 6.0E+00 | | | 8.7E+00 |
| Freon 12 | 75-71-8 | ppbv | 5.1E+00 | 6.1E-01 | 1.0E+00 | | | 2.2E+00 |
| HEXACHLOROBUTADIENE | 87-68-3 | ppbv | 1.5E+01 | 1.5E+00 | 2.0E+00 | | | 6.2E+00 |
| HEXANE (N-HEXANE) | 110-54-3 | ppbv | 2.0E+01 | 2.0E+00 | 2.0E+00 | | | 7.9E+00 |
| ISOPROPYL ALCOHOL (ISOPROPANOL) | 67-63-0 | ppbv | 4.9E+01 | 4.9E+00 | 5.0E+00 | | | 2.0E+01 |
| m,p-Xylene | 1330-20-7 | ppbv | 2.0E+01 | 2.1E+00 | 2.0E+00 | | | 8.0E+00 |
| Methyl ethyl ketone | 78-93-3 | ppbv | 1.5E+01 | 1.4E+00 | 2.0E+00 | | | 6.1E+00 |
| METHYL ISOBUTYL KETONE | 108-10-1 | ppbv | 1.5E+01 | 1.5E+00 | 2.0E+00 | | | 6.1E+00 |
| METHYL TERT-BUTYL ETHER | 1634-04-4 | ppbv | 2.0E+01 | 1.9E+00 | 2.0E+00 | | | 8.0E+00 |
| METHYLENE CHLORIDE | 75-09-2 | ppbv | 4.9E+01 | 4.9E+00 | 5.0E+00 | | | 2.0E+01 |
| O-XYLENE | 95-47-6 | ppbv | 5.1E+00 | 4.6E-01 | 1.0E+00 | | | 2.2E+00 |
| STYRENE | 100-42-5 | ppbv | 1.5E+01 | 1.4E+00 | 2.0E+00 | | | 6.1E+00 |
| Tetrachloroethene (PCE) | 127-18-4 | ppbv | 1.9E+03 | 1.1E+03 | | | 1.1E+03 | 1.4E+03 |
| TOLUENE | 108-88-3 | ppbv | 5.0E+00 | 5.3E-01 | 1.0E+00 | | | 2.2E+00 |
| TRANS-1,2-DICHLOROETHENE | 156-60-5 | ppbv | 5.0E+00 | 2.0E+00 | 2.0E+00 | | | 3.0E+00 |
| TRANS-1,3-DICHLOROPROPENE | 10061-02-6 | ppbv | 9.9E+00 | 1.1E+00 | 1.0E+00 | | | 4.0E+00 |
| Trichloroethene (TCE) | 79-01-6 | ppbv | 2.6E+02 | 1.1E+02 | | 1.1E+02 | | 1.6E+02 |
| VINYL ACETATE | 108-05-4 | ppbv | 2.0E+01 | 2.0E+00 | 2.0E+00 | | | 8.0E+00 |
| VINYL CHLORIDE | 75-01-4 | ppbv | 5.1E+00 | 3.9E-01 | 1.0E+00 | | | 2.2E+00 |

**Omega Chemical Site**
**Full Scale On Site Soils Remedy**
**Preliminary Design Report**
**Influent Estimate Detail for Well:** VE-26S
**Basis for Estimated Concentrations:** VE-26S

Performed by JTB Date 10/2/2012
Checked by IL Date 10/10/2012

See Notes on Summary Tab

| Average of NumericResult2 | | | SampleLocation | SampBegDepth | SampEndDepth | Date | |
|---|---|---|---|---|---|---|---|
| | | | VE-26S (blank) (blank) | | | | Overall Average |
| Parameter | CAS | Units2 | 6/5/2012 17:13 | 7/3/2012 13:32 | 7/8/2012 10:15 | 7/11/2012 4:21 | |
| 1,1,1-Trichloroethane (TCA) | 71-55-6 | ppbv | 1.0E+01 | 1.0E+01 | 1.0E+01 | | 1.0E+01 |
| 1,1,2,2-TETRACHLOROETHANE | 79-34-5 | ppbv | 2.0E+01 | 2.0E+01 | 2.0E+01 | | 2.0E+01 |
| 1,1,2-TRICHLOROETHANE | 79-00-5 | ppbv | 1.0E+01 | 1.0E+01 | 1.0E+01 | | 1.0E+01 |
| 1,1-DICHLOROETHANE | 75-34-3 | ppbv | 2.7E+01 | 1.2E+01 | 1.2E+01 | | 1.7E+01 |
| 1,1-DICHLOROETHENE | 75-35-4 | ppbv | 3.3E+03 | 1.1E+03 | 1.1E+03 | | 1.8E+03 |
| 1,2,4-TRICHLOROBENZENE | 120-82-1 | ppbv | 4.0E+01 | 4.0E+01 | 4.0E+01 | | 4.0E+01 |
| 1,2,4-TRIMETHYLBENZENE | 95-63-6 | ppbv | 3.1E+01 | 3.1E+01 | 3.0E+01 | | 3.0E+01 |
| 1,2-Dibromoethane (EDB) | 106-93-4 | ppbv | 1.0E+01 | 1.0E+01 | 1.0E+01 | | 1.0E+01 |
| 1,2-DICHLOROBENZENE | 95-50-1 | ppbv | 1.0E+01 | 1.0E+01 | 1.0E+01 | | 1.0E+01 |
| 1,2-DICHLOROETHANE | 107-06-2 | ppbv | 6.4E+01 | 3.5E+01 | 3.4E+01 | | 4.4E+01 |
| 1,2-DICHLOROPROPANE | 78-87-5 | ppbv | 1.0E+01 | 1.0E+01 | 1.0E+01 | | 1.0E+01 |
| 1,2-Dichlorotetrafluoroethane | 76-14-2 | ppbv | 4.0E+01 | 4.0E+01 | 4.0E+01 | | 4.0E+01 |
| 1,3,5-TRIMETHYLBENZENE | 108-67-8 | ppbv | 1.0E+01 | 1.0E+01 | 1.0E+01 | | 1.0E+01 |
| 1,3-DICHLOROBENZENE | 541-73-1 | ppbv | 1.0E+01 | 1.0E+01 | 1.0E+01 | | 1.0E+01 |
| 1,4-DICHLOROBENZENE | 106-46-7 | ppbv | 1.0E+01 | 1.0E+01 | 1.0E+01 | | 1.0E+01 |
| 1,4-DIOXANE | 123-91-1 | ppbv | 2.0E+02 | 2.0E+02 | 2.0E+02 | | 2.0E+02 |
| 2-HEXANONE | 591-78-6 | ppbv | 2.9E+01 | 2.9E+01 | 3.0E+01 | | 3.0E+01 |
| 4-ETHYLTOLUENE | 622-96-8 | ppbv | 1.0E+01 | 1.0E+01 | 1.0E+01 | | 1.0E+01 |
| ACETONE | 67-64-1 | ppbv | 4.0E+01 | 4.0E+01 | 4.0E+01 | | 4.0E+01 |
| BENZENE | 71-43-2 | ppbv | 1.0E+01 | 1.0E+01 | 1.0E+01 | | 1.0E+01 |
| BENZYL CHLORIDE | 100-44-7 | ppbv | 3.1E+01 | 3.1E+01 | 3.0E+01 | | 3.1E+01 |
| BROMODICHLOROMETHANE | 75-27-4 | ppbv | 1.0E+01 | 1.0E+01 | 1.0E+01 | | 1.0E+01 |
| BROMOFORM | 75-25-2 | ppbv | 9.7E+00 | 9.7E+00 | 1.0E+01 | | 9.8E+00 |
| BROMOMETHANE | 74-83-9 | ppbv | 1.0E+01 | 1.0E+01 | 1.0E+01 | | 1.0E+01 |
| CARBON DISULFIDE | 75-15-0 | ppbv | 3.9E+01 | 3.9E+01 | 4.0E+01 | | 3.9E+01 |
| CARBON TETRACHLORIDE | 56-23-5 | ppbv | 1.0E+01 | 1.0E+01 | 1.0E+01 | | 1.0E+01 |
| CHLOROBENZENE | 108-90-7 | ppbv | 1.0E+01 | 1.0E+01 | 1.0E+01 | | 1.0E+01 |
| CHLOROETHANE | 75-00-3 | ppbv | 9.9E+00 | 9.9E+00 | 1.0E+01 | | 9.9E+00 |
| CHLOROFORM | 67-66-3 | ppbv | 6.3E+02 | 3.1E+02 | 3.2E+02 | | 4.2E+02 |
| CHLOROMETHANE | 74-87-3 | ppbv | 1.0E+01 | 1.0E+01 | 1.0E+01 | | 1.0E+01 |
| CIS-1,2-DICHLOROETHENE | 156-59-2 | ppbv | 1.0E+01 | 1.0E+01 | 1.0E+01 | | 1.0E+01 |
| CIS-1,3-DICHLOROPROPENE | 10061-01-5 | ppbv | 9.9E+00 | 9.9E+00 | 1.0E+01 | | 9.9E+00 |
| DIBROMOCHLOROMETHANE | 124-48-1 | ppbv | 1.0E+01 | 1.0E+01 | 1.0E+01 | | 1.0E+01 |
| ETHYLBENZENE | 100-41-4 | ppbv | 9.9E+00 | 9.9E+00 | 1.0E+01 | | 9.9E+00 |
| Freon 11 | 75-69-4 | ppbv | 8.0E+02 | 3.7E+02 | 3.7E+02 | | 5.1E+02 |
| Freon 113 | 76-13-1 | ppbv | 4.4E+03 | 1.4E+03 | 1.4E+03 | | 2.4E+03 |
| Freon 12 | 75-71-8 | ppbv | 9.9E+00 | 9.9E+00 | 1.0E+01 | | 9.9E+00 |
| HEXACHLOROBUTADIENE | 87-68-3 | ppbv | 3.0E+01 | 3.0E+01 | 3.0E+01 | | 3.0E+01 |
| HEXANE (N-HEXANE) | 110-54-3 | ppbv | 4.0E+01 | 4.0E+01 | 4.0E+01 | | 4.0E+01 |
| ISOPROPYL ALCOHOL (ISOPROPANOL) | 67-63-0 | ppbv | 1.0E+02 | 1.0E+02 | 1.0E+02 | | 1.0E+02 |
| m,p-Xylene | 1330-20-7 | ppbv | 3.9E+01 | 3.9E+01 | 4.0E+01 | | 3.9E+01 |
| Methyl ethyl ketone | 78-93-3 | ppbv | 3.0E+01 | 3.0E+01 | 3.0E+01 | | 3.0E+01 |
| METHYL ISOBUTYL KETONE | 108-10-1 | ppbv | 2.9E+01 | 2.9E+01 | 3.0E+01 | | 3.0E+01 |
| METHYL TERT-BUTYL ETHER | 1634-04-4 | ppbv | 3.9E+01 | 3.9E+01 | 4.0E+01 | | 3.9E+01 |
| METHYLENE CHLORIDE | 75-09-2 | ppbv | 1.0E+02 | 1.0E+02 | 1.0E+02 | | 1.0E+02 |
| O-XYLENE | 95-47-6 | ppbv | 9.9E+00 | 9.9E+00 | 1.0E+01 | | 9.9E+00 |
| STYRENE | 100-42-5 | ppbv | 3.1E+01 | 3.1E+01 | 3.0E+01 | | 3.0E+01 |
| Tetrachloroethene (PCE) | 127-18-4 | ppbv | 9.0E+03 | 4.6E+03 | | 4.5E+03 | 6.0E+03 |
| TOLUENE | 108-88-3 | ppbv | 1.0E+01 | 1.0E+01 | 1.0E+01 | | 1.0E+01 |
| TRANS-1,2-DICHLOROETHENE | 156-60-5 | ppbv | 1.9E+01 | 1.0E+01 | 1.0E+01 | | 1.3E+01 |
| TRANS-1,3-DICHLOROPROPENE | 10061-02-6 | ppbv | 2.0E+01 | 2.0E+01 | 2.0E+01 | | 2.0E+01 |
| Trichloroethene (TCE) | 79-01-6 | ppbv | 9.1E+02 | 9.5E+02 | 9.4E+02 | | 9.3E+02 |
| VINYL ACETATE | 108-05-4 | ppbv | 4.0E+01 | 4.0E+01 | 4.0E+01 | | 4.0E+01 |
| VINYL CHLORIDE | 75-01-4 | ppbv | 1.0E+01 | 1.0E+01 | 1.0E+01 | | 1.0E+01 |

**Omega Chemical Site**
**Full Scale On Site Soils Remedy**
**Preliminary Design Report**
**Influent Estimate Detail for Well:** VE-27S
**Basis for Estimated Concentrations:** VE-27S

Performed by JTB Date 10/2/2012
Checked by IL Date 10/10/2012

See Notes on Summary Tab

| Average of NumericResult2 | | | SampleLocation | SampBegDepth | SampEndDepth | Date | |
|---|---|---|---|---|---|---|---|
| | | | VE-27S (blank) (blank) | | | | Overall Average |
| Parameter | CAS | Units2 | 6/5/2012 17:18 | 7/3/2012 13:37 | 7/11/2012 5:06 | 7/11/2012 21:12 | |
| 1,1,1-Trichloroethane (TCA) | 71-55-6 | ppbv | 4.9E+00 | 2.6E+00 | 3.0E+00 | | 3.5E+00 |
| 1,1,2,2-TETRACHLOROETHANE | 79-34-5 | ppbv | 1.0E+01 | 5.0E+00 | 5.0E+00 | | 6.7E+00 |
| 1,1,2-TRICHLOROETHANE | 79-00-5 | ppbv | 4.9E+00 | 2.6E+00 | 3.0E+00 | | 3.5E+00 |
| 1,1-DICHLOROETHANE | 75-34-3 | ppbv | 8.6E+00 | 5.4E+00 | 6.0E+00 | | 6.7E+00 |
| 1,1-DICHLOROETHENE | 75-35-4 | ppbv | 6.3E+02 | 4.3E+02 | 4.2E+02 | | 4.9E+02 |
| 1,2,4-TRICHLOROBENZENE | 120-82-1 | ppbv | 2.0E+01 | 1.0E+01 | 1.0E+01 | | 1.3E+01 |
| 1,2,4-TRIMETHYLBENZENE | 95-63-6 | ppbv | 1.5E+01 | 7.5E+00 | 8.0E+00 | | 1.0E+01 |
| 1,2-Dibromoethane (EDB) | 106-93-4 | ppbv | 4.9E+00 | 2.5E+00 | 3.0E+00 | | 3.5E+00 |
| 1,2-DICHLOROBENZENE | 95-50-1 | ppbv | 5.0E+00 | 2.5E+00 | 3.0E+00 | | 3.5E+00 |
| 1,2-DICHLOROETHANE | 107-06-2 | ppbv | 1.4E+01 | 1.1E+01 | 1.1E+01 | | 1.2E+01 |
| 1,2-DICHLOROPROPANE | 78-87-5 | ppbv | 5.0E+00 | 2.6E+00 | 3.0E+00 | | 3.5E+00 |
| 1,2-Dichlorotetrafluoroethane | 76-14-2 | ppbv | 2.0E+01 | 1.0E+01 | 1.0E+01 | | 1.3E+01 |
| 1,3,5-TRIMETHYLBENZENE | 108-67-8 | ppbv | 5.1E+00 | 2.4E+00 | 3.0E+00 | | 3.5E+00 |
| 1,3-DICHLOROBENZENE | 541-73-1 | ppbv | 5.0E+00 | 2.5E+00 | 3.0E+00 | | 3.5E+00 |
| 1,4-DICHLOROBENZENE | 106-46-7 | ppbv | 5.0E+00 | 2.5E+00 | 3.0E+00 | | 3.5E+00 |
| 1,4-DIOXANE | 123-91-1 | ppbv | 1.0E+02 | 5.0E+01 | 5.0E+01 | | 6.7E+01 |
| 2-HEXANONE | 591-78-6 | ppbv | 1.5E+01 | 7.6E+00 | 8.0E+00 | | 1.0E+01 |
| 4-ETHYLTOLUENE | 622-96-8 | ppbv | 5.1E+00 | 2.4E+00 | 3.0E+00 | | 3.5E+00 |
| ACETONE | 67-64-1 | ppbv | 2.0E+01 | 1.0E+01 | 1.0E+01 | | 1.3E+01 |
| BENZENE | 71-43-2 | ppbv | 5.0E+00 | 2.5E+00 | 3.0E+00 | | 3.5E+00 |
| BENZYL CHLORIDE | 100-44-7 | ppbv | 1.5E+01 | 7.5E+00 | 8.0E+00 | | 1.0E+01 |
| BROMODICHLOROMETHANE | 75-27-4 | ppbv | 5.1E+00 | 2.5E+00 | 3.0E+00 | | 3.5E+00 |
| BROMOFORM | 75-25-2 | ppbv | 5.0E+00 | 2.5E+00 | 3.0E+00 | | 3.5E+00 |
| BROMOMETHANE | 74-83-9 | ppbv | 4.9E+00 | 2.6E+00 | 3.0E+00 | | 3.5E+00 |
| CARBON DISULFIDE | 75-15-0 | ppbv | 2.0E+01 | 1.0E+01 | 1.0E+01 | | 1.3E+01 |
| CARBON TETRACHLORIDE | 56-23-5 | ppbv | 4.9E+00 | 2.5E+00 | 3.0E+00 | | 3.5E+00 |
| CHLOROBENZENE | 108-90-7 | ppbv | 5.0E+00 | 2.6E+00 | 3.0E+00 | | 3.5E+00 |
| CHLOROETHANE | 75-00-3 | ppbv | 4.9E+00 | 2.7E+00 | 3.0E+00 | | 3.5E+00 |
| CHLOROFORM | 67-66-3 | ppbv | 3.1E+02 | 2.0E+02 | 2.0E+02 | | 2.4E+02 |
| CHLOROMETHANE | 74-87-3 | ppbv | 4.8E+00 | 2.4E+00 | 3.0E+00 | | 3.4E+00 |
| CIS-1,2-DICHLOROETHENE | 156-59-2 | ppbv | 5.0E+00 | 2.5E+00 | 3.0E+00 | | 3.5E+00 |
| CIS-1,3-DICHLOROPROPENE | 10061-01-5 | ppbv | 5.1E+00 | 2.4E+00 | 3.0E+00 | | 3.5E+00 |
| DIBROMOCHLOROMETHANE | 124-48-1 | ppbv | 5.0E+00 | 2.5E+00 | 3.0E+00 | | 3.5E+00 |
| ETHYLBENZENE | 100-41-4 | ppbv | 5.1E+00 | 2.5E+00 | 3.0E+00 | | 3.5E+00 |
| Freon 11 | 75-69-4 | ppbv | 2.3E+02 | 1.6E+02 | 1.6E+02 | | 1.8E+02 |
| Freon 113 | 76-13-1 | ppbv | 6.7E+02 | 4.0E+02 | 4.1E+02 | | 4.9E+02 |
| Freon 12 | 75-71-8 | ppbv | 5.1E+00 | 2.4E+00 | 3.0E+00 | | 3.5E+00 |
| HEXACHLOROBUTADIENE | 87-68-3 | ppbv | 1.5E+01 | 7.5E+00 | 8.0E+00 | | 1.0E+01 |
| HEXANE (N-HEXANE) | 110-54-3 | ppbv | 2.0E+01 | 9.9E+00 | 1.0E+01 | | 1.3E+01 |
| ISOPROPYL ALCOHOL (ISOPROPANOL) | 67-63-0 | ppbv | 4.9E+01 | 2.5E+01 | 2.5E+01 | | 3.3E+01 |
| m,p-Xylene | 1330-20-7 | ppbv | 2.0E+01 | 9.9E+00 | 1.0E+01 | | 1.3E+01 |
| Methyl ethyl ketone | 78-93-3 | ppbv | 1.5E+01 | 7.5E+00 | 8.0E+00 | | 1.0E+01 |
| METHYL ISOBUTYL KETONE | 108-10-1 | ppbv | 1.5E+01 | 7.6E+00 | 8.0E+00 | | 1.0E+01 |
| METHYL TERT-BUTYL ETHER | 1634-04-4 | ppbv | 2.0E+01 | 1.0E+01 | 1.0E+01 | | 1.3E+01 |
| METHYLENE CHLORIDE | 75-09-2 | ppbv | 4.9E+01 | 2.5E+01 | 2.5E+01 | | 3.3E+01 |
| O-XYLENE | 95-47-6 | ppbv | 5.1E+00 | 2.5E+00 | 3.0E+00 | | 3.5E+00 |
| STYRENE | 100-42-5 | ppbv | 1.5E+01 | 7.5E+00 | 8.0E+00 | | 1.0E+01 |
| Tetrachloroethene (PCE) | 127-18-4 | ppbv | 1.6E+03 | 7.2E+02 | | 7.2E+02 | 1.0E+03 |
| TOLUENE | 108-88-3 | ppbv | 5.0E+00 | 2.4E+00 | 3.0E+00 | | 3.5E+00 |
| TRANS-1,2-DICHLOROETHENE | 156-60-5 | ppbv | 5.0E+00 | 2.5E+00 | 3.0E+00 | | 3.5E+00 |
| TRANS-1,3-DICHLOROPROPENE | 10061-02-6 | ppbv | 9.9E+00 | 5.1E+00 | 5.0E+00 | | 6.7E+00 |
| Trichloroethene (TCE) | 79-01-6 | ppbv | 2.4E+02 | 1.8E+02 | 1.8E+02 | | 2.0E+02 |
| VINYL ACETATE | 108-05-4 | ppbv | 2.0E+01 | 9.9E+00 | 1.0E+01 | | 1.3E+01 |
| VINYL CHLORIDE | 75-01-4 | ppbv | 5.1E+00 | 2.3E+00 | 3.0E+00 | | 3.5E+00 |

**Omega Chemical Site**
**Full Scale On Site Soils Remedy**
**Preliminary Design Report**
**Influent Estimate Detail for Well:** **VE-28S**
**Basis for Estimated Concentrations:** **VE-28S**

Performed by JTB Date 10/2/2012
Checked by IL Date 10/10/2012

See Notes on Summary Tab

| Average of NumericResult2 | | | SampleLocation | SampBegDepth | SampEndDepth | Date |
|---|---|---|---|---|---|---|
| | | | VE-28S (blank) (blank) | | | Overall Average |
| Parameter | CAS | Units2 | 6/5/2012 17:23 | 7/3/2012 13:42 | 7/11/2012 19:40 | |
| 1,1,1-Trichloroethane (TCA) | 71-55-6 | ppbv | 4.9E+00 | 1.5E+00 | 1.0E+00 | 2.5E+00 |
| 1,1,2,2-TETRACHLOROETHANE | 79-34-5 | ppbv | 1.0E+01 | 2.8E+00 | 3.0E+00 | 5.3E+00 |
| 1,1,2-TRICHLOROETHANE | 79-00-5 | ppbv | 4.9E+00 | 1.5E+00 | 1.0E+00 | 2.5E+00 |
| 1,1-DICHLOROETHANE | 75-34-3 | ppbv | 4.9E+00 | 1.7E+00 | 2.0E+00 | 2.9E+00 |
| 1,1-DICHLOROETHENE | 75-35-4 | ppbv | 1.4E+01 | 1.4E+01 | 1.4E+01 | 1.4E+01 |
| 1,2,4-TRICHLOROBENZENE | 120-82-1 | ppbv | 2.0E+01 | 5.7E+00 | 6.0E+00 | 1.1E+01 |
| 1,2,4-TRIMETHYLBENZENE | 95-63-6 | ppbv | 1.5E+01 | 4.3E+00 | 4.0E+00 | 7.8E+00 |
| 1,2-Dibromoethane (EDB) | 106-93-4 | ppbv | 4.9E+00 | 1.4E+00 | 1.0E+00 | 2.5E+00 |
| 1,2-DICHLOROBENZENE | 95-50-1 | ppbv | 5.0E+00 | 1.3E+00 | 1.0E+00 | 2.4E+00 |
| 1,2-DICHLOROETHANE | 107-06-2 | ppbv | 4.9E+00 | 2.0E+00 | 2.0E+00 | 3.0E+00 |
| 1,2-DICHLOROPROPANE | 78-87-5 | ppbv | 5.0E+00 | 1.5E+00 | 1.0E+00 | 2.5E+00 |
| 1,2-Dichlorotetrafluoroethane | 76-14-2 | ppbv | 2.0E+01 | 5.6E+00 | 6.0E+00 | 1.1E+01 |
| 1,3,5-TRIMETHYLBENZENE | 108-67-8 | ppbv | 5.1E+00 | 1.4E+00 | 1.0E+00 | 2.5E+00 |
| 1,3-DICHLOROBENZENE | 541-73-1 | ppbv | 5.0E+00 | 1.3E+00 | 1.0E+00 | 2.4E+00 |
| 1,4-DICHLOROBENZENE | 106-46-7 | ppbv | 5.0E+00 | 1.3E+00 | 1.0E+00 | 2.4E+00 |
| 1,4-DIOXANE | 123-91-1 | ppbv | 1.0E+02 | 2.8E+01 | 2.8E+01 | 5.2E+01 |
| 2-HEXANONE | 591-78-6 | ppbv | 1.5E+01 | 4.1E+00 | 4.0E+00 | 7.7E+00 |
| 4-ETHYLTOLUENE | 622-96-8 | ppbv | 5.1E+00 | 1.4E+00 | 1.0E+00 | 2.5E+00 |
| ACETONE | 67-64-1 | ppbv | 2.0E+01 | 5.5E+00 | 6.0E+00 | 1.1E+01 |
| BENZENE | 71-43-2 | ppbv | 5.0E+00 | 1.6E+00 | 1.0E+00 | 2.5E+00 |
| BENZYL CHLORIDE | 100-44-7 | ppbv | 1.5E+01 | 4.2E+00 | 4.0E+00 | 7.8E+00 |
| BROMODICHLOROMETHANE | 75-27-4 | ppbv | 5.1E+00 | 1.3E+00 | 1.0E+00 | 2.5E+00 |
| BROMOFORM | 75-25-2 | ppbv | 5.0E+00 | 1.4E+00 | 1.0E+00 | 2.5E+00 |
| BROMOMETHANE | 74-83-9 | ppbv | 4.9E+00 | 1.3E+00 | 1.0E+00 | 2.4E+00 |
| CARBON DISULFIDE | 75-15-0 | ppbv | 2.0E+01 | 5.5E+00 | 6.0E+00 | 1.0E+01 |
| CARBON TETRACHLORIDE | 56-23-5 | ppbv | 4.9E+00 | 1.4E+00 | 1.0E+00 | 2.5E+00 |
| CHLOROBENZENE | 108-90-7 | ppbv | 5.0E+00 | 1.3E+00 | 1.0E+00 | 2.4E+00 |
| CHLOROETHANE | 75-00-3 | ppbv | 4.9E+00 | 1.5E+00 | 1.0E+00 | 2.5E+00 |
| CHLOROFORM | 67-66-3 | ppbv | 7.6E+01 | 5.1E+01 | 5.1E+01 | 5.9E+01 |
| CHLOROMETHANE | 74-87-3 | ppbv | 4.8E+00 | 1.5E+00 | 1.0E+00 | 2.4E+00 |
| CIS-1,2-DICHLOROETHENE | 156-59-2 | ppbv | 5.0E+00 | 1.5E+00 | 1.0E+00 | 2.5E+00 |
| CIS-1,3-DICHLOROPROPENE | 10061-01-5 | ppbv | 5.1E+00 | 1.3E+00 | 1.0E+00 | 2.5E+00 |
| DIBROMOCHLOROMETHANE | 124-48-1 | ppbv | 5.0E+00 | 1.4E+00 | 1.0E+00 | 2.5E+00 |
| ETHYLBENZENE | 100-41-4 | ppbv | 5.1E+00 | 1.4E+00 | 1.0E+00 | 2.5E+00 |
| Freon 11 | 75-69-4 | ppbv | 1.0E+01 | 2.8E+00 | 3.0E+00 | 5.3E+00 |
| Freon 113 | 76-13-1 | ppbv | 1.4E+01 | 4.2E+00 | 4.0E+00 | 7.5E+00 |
| Freon 12 | 75-71-8 | ppbv | 5.1E+00 | 1.4E+00 | 1.0E+00 | 2.5E+00 |
| HEXACHLOROBUTADIENE | 87-68-3 | ppbv | 1.5E+01 | 4.2E+00 | 4.0E+00 | 7.7E+00 |
| HEXANE (N-HEXANE) | 110-54-3 | ppbv | 2.0E+01 | 5.7E+00 | 6.0E+00 | 1.1E+01 |
| ISOPROPYL ALCOHOL (ISOPROPANOL) | 67-63-0 | ppbv | 4.9E+01 | 1.4E+01 | 1.4E+01 | 2.6E+01 |
| m,p-Xylene | 1330-20-7 | ppbv | 2.0E+01 | 5.5E+00 | 6.0E+00 | 1.1E+01 |
| Methyl ethyl ketone | 78-93-3 | ppbv | 1.5E+01 | 4.1E+00 | 4.0E+00 | 7.7E+00 |
| METHYL ISOBUTYL KETONE | 108-10-1 | ppbv | 1.5E+01 | 4.1E+00 | 4.0E+00 | 7.7E+00 |
| METHYL TERT-BUTYL ETHER | 1634-04-4 | ppbv | 2.0E+01 | 5.5E+00 | 6.0E+00 | 1.1E+01 |
| METHYLENE CHLORIDE | 75-09-2 | ppbv | 4.9E+01 | 1.4E+01 | 1.4E+01 | 2.6E+01 |
| O-XYLENE | 95-47-6 | ppbv | 5.1E+00 | 1.4E+00 | 1.0E+00 | 2.5E+00 |
| STYRENE | 100-42-5 | ppbv | 1.5E+01 | 4.2E+00 | 4.0E+00 | 7.8E+00 |
| Tetrachloroethene (PCE) | 127-18-4 | ppbv | 3.1E+02 | 1.9E+02 | 1.9E+02 | 2.3E+02 |
| TOLUENE | 108-88-3 | ppbv | 5.0E+00 | 1.3E+00 | 1.0E+00 | 2.5E+00 |
| TRANS-1,2-DICHLOROETHENE | 156-60-5 | ppbv | 5.0E+00 | 1.5E+00 | 1.0E+00 | 2.5E+00 |
| TRANS-1,3-DICHLOROPROPENE | 10061-02-6 | ppbv | 9.9E+00 | 2.9E+00 | 3.0E+00 | 5.3E+00 |
| Trichloroethene (TCE) | 79-01-6 | ppbv | 4.3E+01 | 2.0E+01 | 2.1E+01 | 2.8E+01 |
| VINYL ACETATE | 108-05-4 | ppbv | 2.0E+01 | 5.7E+00 | 6.0E+00 | 1.1E+01 |
| VINYL CHLORIDE | 75-01-4 | ppbv | 5.1E+00 | 1.6E+00 | 1.0E+00 | 2.6E+00 |

**Omega Chemical Site**
**Full Scale On Site Soils Remedy**
**Preliminary Design Report**
**Influent Estimate Detail for Well:** VE-29S
**Basis for Estimated Concentrations:** VE-29S

Performed by JTB Date 10/2/2012
Checked by IL Date 10/10/2012

See Notes on Summary Tab

| Average of NumericResult2 | | | SampleLocation | SampBegDepth | SampEndDepth | Date | |
|---|---|---|---|---|---|---|---|
| | | | VE-29S (blank) (blank) | | | | Overall Average |
| Parameter | CAS | Units2 | 6/5/2012 17:28 | 7/3/2012 13:47 | 7/11/2012 20:27 | 7/12/2012 18:37 | |
| 1,1,1-Trichloroethane (TCA) | 71-55-6 | ppbv | 4.9E+00 | 1.5E+00 | 1.0E+00 | | 2.5E+00 |
| 1,1,2,2-TETRACHLOROETHANE | 79-34-5 | ppbv | 1.0E+01 | 2.8E+00 | 3.0E+00 | | 5.3E+00 |
| 1,1,2-TRICHLOROETHANE | 79-00-5 | ppbv | 4.9E+00 | 1.5E+00 | 1.0E+00 | | 2.5E+00 |
| 1,1-DICHLOROETHANE | 75-34-3 | ppbv | 4.9E+00 | 1.5E+00 | 1.0E+00 | | 2.5E+00 |
| 1,1-DICHLOROETHENE | 75-35-4 | ppbv | 3.0E+02 | 2.8E+02 | 2.8E+02 | | 2.9E+02 |
| 1,2,4-TRICHLOROBENZENE | 120-82-1 | ppbv | 2.0E+01 | 5.7E+00 | 6.0E+00 | | 1.1E+01 |
| 1,2,4-TRIMETHYLBENZENE | 95-63-6 | ppbv | 1.5E+01 | 4.3E+00 | 4.0E+00 | | 7.8E+00 |
| 1,2-Dibromoethane (EDB) | 106-93-4 | ppbv | 4.9E+00 | 1.4E+00 | 1.0E+00 | | 2.5E+00 |
| 1,2-DICHLOROBENZENE | 95-50-1 | ppbv | 5.0E+00 | 1.5E+00 | 1.0E+00 | | 2.5E+00 |
| 1,2-DICHLOROETHANE | 107-06-2 | ppbv | 4.9E+00 | 1.5E+00 | 1.0E+00 | | 2.5E+00 |
| 1,2-DICHLOROPROPANE | 78-87-5 | ppbv | 5.0E+00 | 1.5E+00 | 1.0E+00 | | 2.5E+00 |
| 1,2-Dichlorotetrafluoroethane | 76-14-2 | ppbv | 2.0E+01 | 5.7E+00 | 6.0E+00 | | 1.1E+01 |
| 1,3,5-TRIMETHYLBENZENE | 108-67-8 | ppbv | 5.1E+00 | 1.4E+00 | 1.0E+00 | | 2.5E+00 |
| 1,3-DICHLOROBENZENE | 541-73-1 | ppbv | 5.0E+00 | 1.5E+00 | 1.0E+00 | | 2.5E+00 |
| 1,4-DICHLOROBENZENE | 106-46-7 | ppbv | 5.0E+00 | 1.5E+00 | 1.0E+00 | | 2.5E+00 |
| 1,4-DIOXANE | 123-91-1 | ppbv | 1.0E+02 | 2.8E+01 | 2.8E+01 | | 5.2E+01 |
| 2-HEXANONE | 591-78-6 | ppbv | 1.5E+01 | 4.1E+00 | 4.0E+00 | | 7.7E+00 |
| 4-ETHYLTOLUENE | 622-96-8 | ppbv | 5.1E+00 | 1.4E+00 | 1.0E+00 | | 2.5E+00 |
| ACETONE | 67-64-1 | ppbv | 2.0E+01 | 8.4E+00 | 9.0E+00 | | 1.3E+01 |
| BENZENE | 71-43-2 | ppbv | 5.0E+00 | 1.6E+00 | 1.0E+00 | | 2.5E+00 |
| BENZYL CHLORIDE | 100-44-7 | ppbv | 1.5E+01 | 4.2E+00 | 4.0E+00 | | 7.8E+00 |
| BROMODICHLOROMETHANE | 75-27-4 | ppbv | 5.1E+00 | 1.5E+00 | 1.0E+00 | | 2.5E+00 |
| BROMOFORM | 75-25-2 | ppbv | 5.0E+00 | 1.5E+00 | 1.0E+00 | | 2.5E+00 |
| BROMOMETHANE | 74-83-9 | ppbv | 4.9E+00 | 1.5E+00 | 1.0E+00 | | 2.5E+00 |
| CARBON DISULFIDE | 75-15-0 | ppbv | 2.0E+01 | 5.8E+00 | 6.0E+00 | | 1.1E+01 |
| CARBON TETRACHLORIDE | 56-23-5 | ppbv | 4.9E+00 | 1.4E+00 | 1.0E+00 | | 2.5E+00 |
| CHLOROBENZENE | 108-90-7 | ppbv | 5.0E+00 | 1.5E+00 | 1.0E+00 | | 2.5E+00 |
| CHLOROETHANE | 75-00-3 | ppbv | 4.9E+00 | 1.5E+00 | 1.0E+00 | | 2.5E+00 |
| CHLOROFORM | 67-66-3 | ppbv | 1.9E+01 | 1.3E+01 | 1.3E+01 | | 1.5E+01 |
| CHLOROMETHANE | 74-87-3 | ppbv | 4.8E+00 | 1.5E+00 | 1.0E+00 | | 2.4E+00 |
| CIS-1,2-DICHLOROETHENE | 156-59-2 | ppbv | 5.0E+00 | 1.5E+00 | 1.0E+00 | | 2.5E+00 |
| CIS-1,3-DICHLOROPROPENE | 10061-01-5 | ppbv | 5.1E+00 | 1.3E+00 | 1.0E+00 | | 2.5E+00 |
| DIBROMOCHLOROMETHANE | 124-48-1 | ppbv | 5.0E+00 | 1.4E+00 | 1.0E+00 | | 2.5E+00 |
| ETHYLBENZENE | 100-41-4 | ppbv | 5.1E+00 | 1.4E+00 | 1.0E+00 | | 2.5E+00 |
| Freon 11 | 75-69-4 | ppbv | 4.4E+01 | 3.2E+01 | 3.2E+01 | | 3.6E+01 |
| Freon 113 | 76-13-1 | ppbv | 1.0E+02 | 5.9E+01 | 5.9E+01 | | 7.4E+01 |
| Freon 12 | 75-71-8 | ppbv | 5.1E+00 | 1.4E+00 | 1.0E+00 | | 2.5E+00 |
| HEXACHLOROBUTADIENE | 87-68-3 | ppbv | 1.5E+01 | 4.2E+00 | 4.0E+00 | | 7.7E+00 |
| HEXANE (N-HEXANE) | 110-54-3 | ppbv | 2.0E+01 | 5.7E+00 | 6.0E+00 | | 1.1E+01 |
| ISOPROPYL ALCOHOL (ISOPROPANOL) | 67-63-0 | ppbv | 4.9E+01 | 1.4E+01 | 1.4E+01 | | 2.6E+01 |
| m,p-Xylene | 1330-20-7 | ppbv | 2.0E+01 | 5.8E+00 | 6.0E+00 | | 1.1E+01 |
| Methyl ethyl ketone | 78-93-3 | ppbv | 1.5E+01 | 4.4E+00 | 4.0E+00 | | 7.8E+00 |
| METHYL ISOBUTYL KETONE | 108-10-1 | ppbv | 1.5E+01 | 4.1E+00 | 4.0E+00 | | 7.7E+00 |
| METHYL TERT-BUTYL ETHER | 1634-04-4 | ppbv | 2.0E+01 | 5.5E+00 | 6.0E+00 | | 1.1E+01 |
| METHYLENE CHLORIDE | 75-09-2 | ppbv | 4.9E+01 | 1.4E+01 | 1.4E+01 | | 2.6E+01 |
| O-XYLENE | 95-47-6 | ppbv | 5.1E+00 | 1.4E+00 | 1.0E+00 | | 2.5E+00 |
| STYRENE | 100-42-5 | ppbv | 1.5E+01 | 4.2E+00 | 4.0E+00 | | 7.8E+00 |
| Tetrachloroethene (PCE) | 127-18-4 | ppbv | 5.0E+02 | 2.9E+02 | | 3.0E+02 | 3.7E+02 |
| TOLUENE | 108-88-3 | ppbv | 5.0E+00 | 1.3E+00 | 1.0E+00 | | 2.5E+00 |
| Total VOCs | VOCs | ppbv | | | 7.5E+02 | | 7.5E+02 |
| TRANS-1,2-DICHLOROETHENE | 156-60-5 | ppbv | 5.0E+00 | 1.5E+00 | 1.0E+00 | | 2.5E+00 |
| TRANS-1,3-DICHLOROPROPENE | 10061-02-6 | ppbv | 9.9E+00 | 2.9E+00 | 3.0E+00 | | 5.3E+00 |
| Trichloroethene (TCE) | 79-01-6 | ppbv | 6.9E+01 | 4.8E+01 | 4.9E+01 | | 5.5E+01 |
| VINYL ACETATE | 108-05-4 | ppbv | 2.0E+01 | 5.7E+00 | 6.0E+00 | | 1.1E+01 |
| VINYL CHLORIDE | 75-01-4 | ppbv | 5.1E+00 | 1.6E+00 | 1.0E+00 | | 2.6E+00 |

**Omega Chemical Site**
**Full Scale On Site Soils Remedy**
**Preliminary Design Report**
**Influent Estimate Detail for Well:** VE-30S
**Basis for Estimated Concentrations:** VE-30S

Performed by JTB Date 10/2/2012
Checked by IL Date 10/10/2012

See Notes on Summary Tab

| Average of NumericResult2 | | | SampleLocation | SampBegDepth | SampEndDepth | Date |
|---|---|---|---|---|---|---|
| | | | VE-30S | | | Overall Average |
| | | | (blank) | | | |
| | | | (blank) | | | |
| Parameter | CAS | Units2 | 6/5/2012 17:33 | 7/3/2012 13:52 | 7/11/2012 7:41 | |
| 1,1,1-Trichloroethane (TCA) | 71-55-6 | ppbv | 4.9E+00 | 5.5E-01 | 1.0E+00 | 2.2E+00 |
| 1,1,2,2-TETRACHLOROETHANE | 79-34-5 | ppbv | 1.0E+01 | 1.0E+00 | 1.0E+00 | 4.0E+00 |
| 1,1,2-TRICHLOROETHANE | 79-00-5 | ppbv | 4.9E+00 | 5.5E-01 | 1.0E+00 | 2.2E+00 |
| 1,1-DICHLOROETHANE | 75-34-3 | ppbv | 4.9E+00 | 4.9E-01 | 1.0E+00 | 2.1E+00 |
| 1,1-DICHLOROETHENE | 75-35-4 | ppbv | 3.3E+02 | 2.4E+01 | 2.4E+01 | 1.3E+02 |
| 1,2,4-TRICHLOROBENZENE | 120-82-1 | ppbv | 2.0E+01 | 2.0E+00 | 2.0E+00 | 8.1E+00 |
| 1,2,4-TRIMETHYLBENZENE | 95-63-6 | ppbv | 1.5E+01 | 1.4E+00 | 2.0E+00 | 6.2E+00 |
| 1,2-Dibromoethane (EDB) | 106-93-4 | ppbv | 4.9E+00 | 5.2E-01 | 1.0E+00 | 2.2E+00 |
| 1,2-DICHLOROBENZENE | 95-50-1 | ppbv | 5.0E+00 | 5.0E-01 | 1.0E+00 | 2.2E+00 |
| 1,2-DICHLOROETHANE | 107-06-2 | ppbv | 4.9E+00 | 4.9E-01 | 1.0E+00 | 2.1E+00 |
| 1,2-DICHLOROPROPANE | 78-87-5 | ppbv | 5.0E+00 | 4.3E-01 | 1.0E+00 | 2.1E+00 |
| 1,2-Dichlorotetrafluoroethane | 76-14-2 | ppbv | 2.0E+01 | 2.0E+00 | 2.0E+00 | 8.0E+00 |
| 1,3,5-TRIMETHYLBENZENE | 108-67-8 | ppbv | 5.1E+00 | 6.1E-01 | 1.0E+00 | 2.2E+00 |
| 1,3-DICHLOROBENZENE | 541-73-1 | ppbv | 5.0E+00 | 5.0E-01 | 1.0E+00 | 2.2E+00 |
| 1,4-DICHLOROBENZENE | 106-46-7 | ppbv | 5.0E+00 | 5.0E-01 | 1.0E+00 | 2.2E+00 |
| 1,4-DIOXANE | 123-91-1 | ppbv | 1.0E+02 | 1.0E+01 | 1.0E+01 | 4.0E+01 |
| 2-HEXANONE | 591-78-6 | ppbv | 1.5E+01 | 1.5E+00 | 2.0E+00 | 6.1E+00 |
| 4-ETHYLTOLUENE | 622-96-8 | ppbv | 5.1E+00 | 6.1E-01 | 1.0E+00 | 2.2E+00 |
| ACETONE | 67-64-1 | ppbv | 2.0E+01 | 2.1E+00 | 2.0E+00 | 8.1E+00 |
| BENZENE | 71-43-2 | ppbv | 5.0E+00 | 6.3E-01 | 1.0E+00 | 2.2E+00 |
| BENZYL CHLORIDE | 100-44-7 | ppbv | 1.5E+01 | 1.5E+00 | 2.0E+00 | 6.2E+00 |
| BROMODICHLOROMETHANE | 75-27-4 | ppbv | 5.1E+00 | 4.5E-01 | 1.0E+00 | 2.2E+00 |
| BROMOFORM | 75-25-2 | ppbv | 5.0E+00 | 4.8E-01 | 1.0E+00 | 2.2E+00 |
| BROMOMETHANE | 74-83-9 | ppbv | 4.9E+00 | 5.2E-01 | 1.0E+00 | 2.1E+00 |
| CARBON DISULFIDE | 75-15-0 | ppbv | 2.0E+01 | 1.9E+00 | 2.0E+00 | 7.9E+00 |
| CARBON TETRACHLORIDE | 56-23-5 | ppbv | 4.9E+00 | 4.8E-01 | 1.0E+00 | 2.1E+00 |
| CHLOROBENZENE | 108-90-7 | ppbv | 5.0E+00 | 4.3E-01 | 1.0E+00 | 2.1E+00 |
| CHLOROETHANE | 75-00-3 | ppbv | 4.9E+00 | 3.8E-01 | 1.0E+00 | 2.1E+00 |
| CHLOROFORM | 67-66-3 | ppbv | 9.8E+01 | 6.6E+00 | 7.0E+00 | 3.7E+01 |
| CHLOROMETHANE | 74-87-3 | ppbv | 4.8E+00 | 4.8E-01 | 1.0E+00 | 2.1E+00 |
| CIS-1,2-DICHLOROETHENE | 156-59-2 | ppbv | 5.0E+00 | 5.0E-01 | 1.0E+00 | 2.2E+00 |
| CIS-1,3-DICHLOROPROPENE | 10061-01-5 | ppbv | 5.1E+00 | 4.4E-01 | 1.0E+00 | 2.2E+00 |
| DIBROMOCHLOROMETHANE | 124-48-1 | ppbv | 5.0E+00 | 4.7E-01 | 1.0E+00 | 2.2E+00 |
| ETHYLBENZENE | 100-41-4 | ppbv | 5.1E+00 | 4.6E-01 | 1.0E+00 | 2.2E+00 |
| Freon 11 | 75-69-4 | ppbv | 3.0E+01 | 3.0E+00 | 3.0E+00 | 1.2E+01 |
| Freon 113 | 76-13-1 | ppbv | 6.1E+01 | 5.6E+00 | 6.0E+00 | 2.4E+01 |
| Freon 12 | 75-71-8 | ppbv | 5.1E+00 | 6.1E-01 | 1.0E+00 | 2.2E+00 |
| HEXACHLOROBUTADIENE | 87-68-3 | ppbv | 1.5E+01 | 1.5E+00 | 2.0E+00 | 6.2E+00 |
| HEXANE (N-HEXANE) | 110-54-3 | ppbv | 2.0E+01 | 2.0E+00 | 2.0E+00 | 7.9E+00 |
| ISOPROPYL ALCOHOL (ISOPROPANOL) | 67-63-0 | ppbv | 4.9E+01 | 4.9E+00 | 5.0E+00 | 2.0E+01 |
| m,p-Xylene | 1330-20-7 | ppbv | 2.0E+01 | 2.1E+00 | 2.0E+00 | 8.0E+00 |
| Methyl ethyl ketone | 78-93-3 | ppbv | 1.5E+01 | 3.7E+00 | 4.0E+00 | 7.5E+00 |
| METHYL ISOBUTYL KETONE | 108-10-1 | ppbv | 1.5E+01 | 1.5E+00 | 2.0E+00 | 6.1E+00 |
| METHYL TERT-BUTYL ETHER | 1634-04-4 | ppbv | 2.0E+01 | 1.9E+00 | 2.0E+00 | 8.0E+00 |
| METHYLENE CHLORIDE | 75-09-2 | ppbv | 4.9E+01 | 4.9E+00 | 5.0E+00 | 2.0E+01 |
| O-XYLENE | 95-47-6 | ppbv | 5.1E+00 | 4.6E-01 | 1.0E+00 | 2.2E+00 |
| STYRENE | 100-42-5 | ppbv | 1.5E+01 | 1.4E+00 | 2.0E+00 | 6.1E+00 |
| Tetrachloroethene (PCE) | 127-18-4 | ppbv | 9.9E+02 | 8.6E+01 | 8.6E+01 | 3.9E+02 |
| TOLUENE | 108-88-3 | ppbv | 5.0E+00 | 2.4E+00 | 2.0E+00 | 3.1E+00 |
| Total VOCs | VOCs | ppbv | | | 1.4E+02 | 1.4E+02 |
| TRANS-1,2-DICHLOROETHENE | 156-60-5 | ppbv | 5.0E+00 | 5.0E-01 | 1.0E+00 | 2.2E+00 |
| TRANS-1,3-DICHLOROPROPENE | 10061-02-6 | ppbv | 9.9E+00 | 1.1E+00 | 1.0E+00 | 4.0E+00 |
| Trichloroethene (TCE) | 79-01-6 | ppbv | 1.1E+02 | 7.6E+00 | 8.0E+00 | 4.1E+01 |
| VINYL ACETATE | 108-05-4 | ppbv | 2.0E+01 | 2.0E+00 | 2.0E+00 | 8.0E+00 |
| VINYL CHLORIDE | 75-01-4 | ppbv | 5.1E+00 | 3.9E-01 | 1.0E+00 | 2.2E+00 |

**Omega Chemical Site**
**Full Scale On Site Soils Remedy**
**Preliminary Design Report**
**Influent Estimate Detail for Well:** VE-31S
**Basis for Estimated Concentrations:** VMPs 13, 14, 42A, and 43A

Performed by JTB Date 10/2/2012
Checked by IL Date 10/10/2012

See Notes on Summary Tab

| Average of NumericResult2 | | | SampleLocation | SampBegDepth | SampEndDepth | Date | | | | | | | | | | | | | | | | | | | | | | | | |
|---|---|---|---|---|---|---|---|---|---|---|---|---|---|---|---|---|---|---|---|---|---|---|---|---|---|---|---|---|---|---|
| | | | VMP-13 | | | | | | | | | VMP-14 | | | | | | | | | | VMP-42 | | | VMP-43 | | | | | Overall Average |
| | | | (blank) | | | | | | | | | (blank) | | | | | | | | | | 6 | 12 | 24 | 6 | 12 | 24 | | | |
| | | | (blank) | | | | | | | | | (blank) | | | | | | | | | | (blank) | (blank) | (blank) | (blank) | (blank) | (blank) | | | |
| Parameter | CAS | Units2 | 7/7/2010 10:38 | 9/8/2010 10:33 | 1/12/2011 16:05 | 4/11/2011 8:52 | 6/30/2011 11:16 | 9/7/2011 8:15 | 12/20/2011 8:35 | 3/27/2012 9:32 | 6/11/2012 12:25 | 7/7/2010 10:58 | 9/8/2010 11:02 | 1/12/2011 16:14 | 4/11/2011 9:08 | 6/30/2011 11:00 | 9/7/2011 8:40 | 12/20/2011 8:55 | 3/27/2012 9:42 | 6/11/2012 12:37 | 3/16/2011 8:37 | 3/16/2011 8:42 | 3/16/2011 8:47 | 3/16/2011 10:43 | 3/16/2011 10:53 | 3/16/2011 13:09 | 3/16/2011 13:10 | |
| 1,1,1,2-TETRACHLOROETHANE | 630-20-6 | ppbv | | | | | | | | | | | | | | | | | | | 7.3E+01 | 7.3E+01 | 7.3E+01 | 7.3E+01 | 7.3E+01 | 7.3E+01 | 7.3E+01 | 7.3E+01 |
| 1,1,1-Trichloroethane (TCA) | 71-55-6 | ppbv | 3.7E+00 | 1.8E-01 | 1.8E+00 | 1.6E+00 | 1.8E+00 | 1.8E+00 | 1.6E+00 | 5.5E-01 | 5.5E-01 | 3.7E-01 | 1.8E+00 | 9.5E+00 | 7.7E+01 | 1.8E+00 | 1.8E+00 | 1.8E+00 | 5.5E-01 | 5.5E-01 | 9.2E+01 | 9.2E+01 | 9.2E+01 | 9.2E+01 | 9.2E+01 | 9.2E+01 | 9.2E+01 | 3.0E+01 |
| 1,1,2,2-TETRACHLOROETHANE | 79-34-5 | ppbv | | | | | | | | 1.0E+00 | 1.0E+00 | | | | | | | | 1.0E+00 | 1.0E+00 | 7.3E+01 | 7.3E+01 | 7.3E+01 | 7.3E+01 | 7.3E+01 | 7.3E+01 | 7.3E+01 | 4.7E+01 |
| 1,1,2-TRICHLOROETHANE | 79-00-5 | ppbv | 4.9E+00 | 7.3E-01 | 1.8E+00 | 1.6E+00 | 1.8E+00 | 1.8E+00 | 1.6E+00 | 5.5E-01 | 5.5E-01 | 2.0E+00 | 3.7E-01 | 1.6E+01 | 7.7E+01 | 1.8E+00 | 1.8E+00 | 1.8E+00 | 5.5E-01 | 5.5E-01 | 9.2E+01 | 9.2E+01 | 9.2E+01 | 9.2E+01 | 9.2E+01 | 9.2E+01 | 9.2E+01 | 3.0E+01 |
| 1,1-DICHLOROETHANE | 75-34-3 | ppbv | 2.5E+00 | 1.7E+00 | 1.7E+00 | 1.7E+00 | 1.7E+00 | 1.7E+00 | 1.7E+00 | 4.9E-01 | 4.9E-01 | 1.7E+00 | 1.7E+00 | 1.6E+01 | 7.7E+01 | 1.7E+00 | 1.7E+00 | 1.7E+00 | 4.9E-01 | 4.9E-01 | 1.2E+02 | 1.2E+02 | 1.2E+02 | 1.2E+02 | 1.2E+02 | 1.2E+02 | 1.2E+02 | 3.9E+01 |
| 1,1-DICHLOROETHENE | 75-35-4 | ppbv | 5.0E+01 | 1.3E+00 | 4.5E+00 | 3.3E+00 | 1.8E+00 | 1.8E+00 | 5.0E-01 | 1.3E+00 | 5.0E-01 | 5.5E+00 | 7.6E-01 | 2.8E+03 | 7.6E+03 | 4.8E+00 | 7.6E-01 | 1.3E+00 | 2.0E+00 | 5.0E-01 | 3.5E+04 | 4.0E+04 | 4.0E+03 | 1.3E+02 | 1.3E+02 | 1.7E+02 | 1.6E+02 | 3.6E+03 |
| 1,1-Difluoroethane | 75-37-6 | ppbv | | | | | | | | | | | | | | | | | | | 3.7E+03 | 3.7E+03 | 3.7E+03 | 3.7E+03 | 3.7E+03 | 3.7E+03 | 3.7E+03 | 3.7E+03 |
| 1,2,4-TRICHLOROBENZENE | 120-82-1 | ppbv | | | | | | | | 2.0E+00 | 2.0E+00 | | | | | | | | 2.0E+00 | 2.0E+00 | | | | | | | | 2.0E+00 |
| 1,2,4-TRIMETHYLBENZENE | 95-63-6 | ppbv | | | | | | | | 1.4E+00 | 3.7E+00 | | | | | | | | 1.4E+00 | 3.9E+00 | | | | | | | | 2.6E+00 |
| 1,2-Dibromoethane (EDB) | 106-93-4 | ppbv | 4.9E+00 | 1.8E+00 | 1.7E+00 | 1.7E+00 | 1.8E+00 | 1.7E+00 | 1.7E+00 | 5.2E-01 | 5.2E-01 | 2.0E+00 | 1.7E+00 | 1.6E+01 | 7.7E+01 | 1.8E+00 | 1.7E+00 | 1.7E+00 | 5.2E-01 | 5.2E-01 | | | | | | | | 6.6E+00 |
| 1,2-DICHLOROBENZENE | 95-50-1 | ppbv | | | | | | | | 5.0E-01 | 5.0E-01 | | | | | | | | 5.0E-01 | 5.0E-01 | | | | | | | | 5.0E-01 |
| 1,2-DICHLOROETHANE | 107-06-2 | ppbv | 4.9E+00 | 7.4E-01 | 1.7E+00 | 1.7E+00 | 1.7E+00 | 1.7E+00 | 1.7E+00 | 4.9E-01 | 4.9E-01 | 1.7E+00 | 1.7E+00 | 1.6E+01 | 7.7E+01 | 1.7E+00 | 1.7E+00 | 1.7E+00 | 4.9E-01 | 4.9E-01 | 2.5E+01 | 2.5E+01 | 2.5E+01 | 2.5E+01 | 2.5E+01 | 2.5E+01 | 2.5E+01 | 1.2E+01 |
| 1,2-DICHLOROPROPANE | 78-87-5 | ppbv | 5.0E+00 | 1.7E+00 | 1.7E+00 | 1.7E+00 | 1.7E+00 | 1.7E+00 | 1.7E+00 | 4.3E-01 | 4.3E-01 | 1.9E+00 | 1.7E+00 | 1.6E+01 | 7.6E+01 | 1.7E+00 | 1.7E+00 | 1.7E+00 | 4.3E-01 | 4.3E-01 | | | | | | | | 6.5E+00 |
| 1,2-Dichlorotetrafluoroethane | 76-14-2 | ppbv | 5.0E+00 | 1.9E+00 | 1.7E+00 | 1.7E+00 | 1.9E+00 | 1.7E+00 | 1.7E+00 | 2.0E+00 | 2.0E+00 | 2.0E+00 | 1.7E+00 | 1.6E+01 | 7.6E+01 | 1.7E+00 | 1.7E+00 | 1.7E+00 | 2.0E+00 | 2.0E+00 | | | | | | | | 6.9E+00 |
| 1,3,5-TRIMETHYLBENZENE | 108-67-8 | ppbv | | | | | | | | 6.1E-01 | 8.1E-01 | | | | | | | | 6.1E-01 | 1.0E+00 | | | | | | | | 7.6E-01 |
| 1,3-DICHLOROBENZENE | 541-73-1 | ppbv | | | | | | | | 5.0E-01 | 5.0E-01 | | | | | | | | 5.0E-01 | 5.0E-01 | | | | | | | | 5.0E-01 |
| 1,4-DICHLOROBENZENE | 106-46-7 | ppbv | | | | | | | | 5.0E-01 | 5.0E-01 | | | | | | | | 5.0E-01 | 5.0E-01 | | | | | | | | 5.0E-01 |
| 1,4-DIOXANE | 123-91-1 | ppbv | 2.5E+01 | 8.9E+00 | 8.6E+00 | 8.3E+00 | 8.9E+00 | 8.6E+00 | 8.3E+00 | 1.0E+01 | 1.0E+01 | 9.4E+00 | 1.1E+00 | 7.8E+01 | 3.6E+02 | 8.6E+00 | 8.6E+00 | 8.6E+00 | 1.0E+01 | 1.0E+01 | | | | | | | | 3.3E+01 |
| 2-HEXANONE | 591-78-6 | ppbv | 4.9E+00 | 1.7E+00 | 1.7E+00 | 1.7E+00 | 1.7E+00 | 1.7E+00 | 1.7E+00 | 1.5E+00 | 1.5E+00 | 1.7E+00 | 1.7E+00 | 1.6E+01 | 7.6E+01 | 1.7E+00 | 1.7E+00 | 1.7E+00 | 1.5E+00 | 1.5E+00 | | | | | | | | 6.7E+00 |
| 4-Bromofluorobenzene | 460-00-4 | ppbv | | | | | | | | | | | | | | | | | | | 4.1E+02 | 4.1E+02 | 4.2E+02 | 4.3E+02 | 4.2E+02 | 4.3E+02 | 4.3E+02 | 4.2E+02 |
| 4-ETHYLTOLUENE | 622-96-8 | ppbv | | | | | | | | 6.1E-01 | 1.0E+00 | | | | | | | | 6.1E-01 | 1.0E+00 | | | | | | | | 8.1E-01 |
| ACETONE | 67-64-1 | ppbv | 6.7E+01 | 6.3E+00 | 6.7E+00 | 8.8E+00 | 5.0E+01 | 1.8E+01 | 8.4E+00 | 4.6E+00 | 1.6E+01 | 1.3E+01 | 4.2E+00 | 5.9E+01 | 1.8E+02 | 3.2E+01 | 3.7E+01 | 4.2E+00 | 6.7E+00 | 3.9E+01 | | | | | | | | 3.1E+01 |
| BENZENE | 71-43-2 | ppbv | 3.4E+00 | 3.1E-01 | 6.3E-01 | 2.8E+00 | 6.3E-01 | 1.3E+00 | 6.3E-01 | 6.3E-01 | 6.3E-01 | 6.3E-01 | 6.3E-01 | 7.5E+00 | 1.6E+01 | 9.4E-01 | 1.6E+00 | 6.3E-01 | 6.3E-01 | 6.3E-01 | 3.1E+01 | 3.1E+01 | 3.1E+01 | 3.1E+01 | 3.1E+01 | 3.1E+01 | 3.1E+01 | 1.0E+01 |
| BENZYL CHLORIDE | 100-44-7 | ppbv | | | | | | | | 1.5E+00 | 1.5E+00 | | | | | | | | 1.5E+00 | 1.5E+00 | | | | | | | | 1.5E+00 |
| BROMODICHLOROMETHANE | 75-27-4 | ppbv | 4.9E+00 | 1.8E+00 | 1.8E+00 | 1.6E+00 | 1.8E+00 | 1.8E+00 | 1.6E+00 | 4.5E-01 | 4.5E-01 | 1.9E+00 | 1.8E+00 | 1.6E+01 | 7.6E+01 | 1.8E+00 | 1.8E+00 | 1.8E+00 | 4.5E-01 | 4.5E-01 | | | | | | | | 6.6E+00 |
| BROMOFORM | 75-25-2 | ppbv | | | | | | | | 4.8E-01 | 4.8E-01 | | | | | | | | 4.8E-01 | 4.8E-01 | | | | | | | | 4.8E-01 |
| BROMOMETHANE | 74-83-9 | ppbv | 4.9E+00 | 1.8E+00 | 1.8E+00 | 1.8E+00 | 1.8E+00 | 1.8E+00 | 1.8E+00 | 5.2E-01 | 5.2E-01 | 1.8E+00 | 1.8E+00 | 1.6E+01 | 7.7E+01 | 1.8E+00 | 1.8E+00 | 1.8E+00 | 5.2E-01 | 5.2E-01 | | | | | | | | 6.7E+00 |
| CARBON DISULFIDE | 75-15-0 | ppbv | 2.9E+00 | 2.9E+00 | 5.8E+00 | 1.9E+00 | 2.2E+00 | 1.9E+01 | 8.4E+00 | 1.9E+00 | 1.9E+00 | 9.6E+00 | 1.3E+00 | 5.1E+01 | 3.9E+02 | 9.0E+00 | 4.8E+00 | 1.6E+00 | 1.9E+00 | 1.9E+00 | | | | | | | | 2.9E+01 |
| CARBON TETRACHLORIDE | 56-23-5 | ppbv | 4.9E+00 | 1.7E+00 | 1.7E+00 | 1.7E+00 | 1.7E+00 | 1.7E+00 | 1.7E+00 | 4.8E-01 | 4.8E-01 | 1.9E+00 | 1.7E+00 | 1.6E+01 | 7.6E+01 | 1.7E+00 | 1.7E+00 | 1.7E+00 | 4.8E-01 | 4.8E-01 | 1.6E+01 | 1.6E+01 | 1.6E+01 | 1.6E+01 | 1.6E+01 | 1.6E+01 | 1.6E+01 | 9.2E+00 |
| CHLOROBENZENE | 108-90-7 | ppbv | 5.0E+00 | 1.7E+00 | 1.7E+00 | 1.7E+00 | 1.7E+00 | 1.7E+00 | 1.7E+00 | 4.3E-01 | 4.3E-01 | 1.7E+00 | 1.7E+00 | 1.6E+01 | 7.6E+01 | 1.7E+00 | 1.7E+00 | 1.7E+00 | 4.3E-01 | 4.3E-01 | | | | | | | | 6.6E+00 |
| CHLOROETHANE | 75-00-3 | ppbv | 4.9E+00 | 1.9E+00 | 1.9E+00 | 1.9E+00 | 1.9E+00 | 1.9E+00 | 1.5E+00 | 3.8E-01 | 3.8E-01 | 1.9E+00 | 1.9E+00 | 1.6E+01 | 7.6E+01 | 1.9E+00 | 1.9E+00 | 1.9E+00 | 3.8E-01 | 3.8E-01 | 1.9E+02 | 1.9E+02 | 1.9E+02 | 1.9E+02 | 1.9E+02 | 1.9E+02 | 1.9E+02 | 5.8E+01 |
| CHLOROFORM | 67-66-3 | ppbv | 2.3E+01 | 1.2E+00 | 1.2E+00 | 1.2E+00 | 1.8E+00 | 1.8E+00 | 4.1E-01 | 6.1E-01 | 4.1E-01 | 3.3E+00 | 8.2E-01 | 2.3E+00 | 1.4E+01 | 4.1E-01 | 1.8E+00 | 1.8E+00 | 4.1E-01 | 4.1E-01 | 2.0E+01 | 2.3E+01 | 2.0E+01 | 2.0E+01 | 2.0E+01 | 2.0E+01 | 2.0E+01 | 8.1E+00 |
| CHLOROMETHANE | 74-87-3 | ppbv | 9.7E+00 | 9.7E-01 | 3.4E+00 | 3.4E+00 | 9.7E-01 | 9.7E-01 | 3.4E+00 | 4.8E-01 | 4.8E-01 | 9.7E-01 | 4.8E-01 | 3.2E+01 | 1.5E+02 | 9.7E-01 | 9.7E-01 | 3.4E+00 | 4.8E-01 | 4.8E-01 | | | | | | | | 1.2E+01 |
| CIS-1,2-DICHLOROETHENE | 156-59-2 | ppbv | 5.0E+00 | 1.8E+00 | 1.8E+00 | 1.8E+00 | 1.8E+00 | 1.8E+00 | 1.8E+00 | 5.0E-01 | 5.0E-01 | 1.8E+00 | 1.8E+00 | 1.6E+01 | 7.6E+01 | 1.8E+00 | 1.8E+00 | 1.8E+00 | 5.0E-01 | 5.0E-01 | 1.3E+02 | 1.3E+02 | 1.3E+02 | 1.3E+02 | 1.3E+02 | 1.3E+02 | 1.3E+02 | 4.0E+01 |
| CIS-1,3-DICHLOROPROPENE | 10061-01-5 | ppbv | 4.8E+00 | 1.8E+00 | 1.8E+00 | 1.8E+00 | 1.8E+00 | 1.8E+00 | 1.8E+00 | 4.4E-01 | 4.4E-01 | 1.8E+00 | 1.8E+00 | 1.6E+01 | 7.7E+01 | 1.8E+00 | 1.8E+00 | 1.8E+00 | 4.4E-01 | 4.4E-01 | | | | | | | | 6.6E+00 |
| DIBROMOCHLOROMETHANE | 124-48-1 | ppbv | 4.9E+00 | 1.8E+00 | 1.8E+00 | 1.8E+00 | 1.8E+00 | 1.8E+00 | 1.6E+00 | 4.7E-01 | 4.7E-01 | 2.0E+00 | 1.8E+00 | 1.6E+01 | 7.6E+01 | 1.8E+00 | 1.8E+00 | 1.8E+00 | 4.7E-01 | 4.7E-01 | | | | | | | | 6.6E+00 |
| ETHYLBENZENE | 100-41-4 | ppbv | 1.6E+00 | 1.8E+00 | 1.8E+00 | 1.6E+00 | 1.8E+00 | 2.3E-01 | 1.6E+00 | 4.6E-01 | 4.6E-01 | 1.8E+00 | 1.8E+00 | 2.5E+00 | 7.6E+01 | 1.8E+00 | 2.3E-01 | 9.2E-01 | 4.6E-01 | 4.6E-01 | 1.2E+02 | 1.2E+02 | 1.2E+02 | 1.2E+02 | 1.2E+02 | 1.2E+02 | 1.2E+02 | 3.6E+01 |
| Freon 11 | 75-69-4 | ppbv | 3.2E+01 | 1.1E+00 | 5.7E+00 | 2.8E+00 | 1.8E+00 | 1.8E+00 | 7.1E-01 | 1.4E+00 | 1.1E+00 | 5.3E-01 | 7.1E-01 | 9.8E+02 | 1.2E+03 | 7.1E-01 | 1.8E+00 | 1.8E+00 | 1.1E+00 | 1.1E+00 | 2.7E+03 | 2.5E+03 | 4.1E+02 | 8.9E+01 | 8.9E+01 | 8.9E+01 | 8.9E+01 | 3.2E+02 |
| Freon 113 | 76-13-1 | ppbv | 7.0E+01 | 9.9E+00 | 1.4E+01 | 8.9E+00 | 1.8E+00 | 1.7E+00 | 1.8E+00 | 7.6E+00 | 1.4E+00 | 1.8E+00 | 4.2E+00 | 3.4E+03 | 3.7E+03 | 1.3E+00 | 1.7E+00 | 7.8E-01 | 1.6E+00 | 1.4E+00 | 7.4E+03 | 7.2E+03 | 1.1E+03 | 6.5E+01 | 6.5E+01 | 6.5E+01 | 6.5E+01 | 9.3E+02 |
| Freon 12 | 75-71-8 | ppbv | 1.2E+00 | 8.1E-01 | 8.1E-01 | 8.1E-01 | 6.1E-01 | 6.1E-01 | 6.1E-01 | 6.1E-01 | 6.1E-01 | 6.1E-01 | 8.1E-01 | 3.2E+00 | 7.7E+01 | 6.1E-01 | 8.1E-01 | 6.1E-01 | 6.1E-01 | 6.1E-01 | 1.0E+02 | 1.0E+02 | 1.0E+02 | 1.0E+02 | 1.0E+02 | 1.0E+02 | 1.0E+02 | 3.2E+01 |
| HEXACHLOROBUTADIENE | 87-68-3 | ppbv | | | | | | | | 1.5E+00 | 1.5E+00 | | | | | | | | 1.5E+00 | 1.5E+00 | | | | | | | | 1.5E+00 |
| HEXANE (N-HEXANE) | 110-54-3 | ppbv | 7.1E+00 | 9.1E+00 | 8.8E+00 | 8.5E+00 | 9.1E+00 | 8.5E-01 | 8.5E+00 | 2.0E+00 | 2.0E+00 | 2.8E-01 | 8.8E+00 | 3.4E+00 | 3.7E+02 | 8.8E+00 | 8.5E-01 | 8.8E+00 | 2.0E+00 | 2.0E+00 | | | | | | | | 2.6E+01 |
| ISOPROPYL ALCOHOL (ISOPROPANOL) | 67-63-0 | ppbv | 2.5E+01 | 9.0E+00 | 8.5E+00 | 8.5E+00 | 9.0E+00 | 8.5E+00 | 8.5E+00 | 4.9E+00 | 4.9E+00 | 9.8E+00 | 8.5E+00 | 8.1E+01 | 3.8E+02 | 9.0E+00 | 2.4E+00 | 8.5E+00 | 4.9E+00 | 4.9E+00 | | | | | | | | 3.3E+01 |
| m,p-Xylene | 1330-20-7 | ppbv | 5.1E+00 | 1.8E+00 | 1.8E+00 | 1.6E+00 | 1.8E+00 | 4.6E-01 | 4.6E-01 | 2.1E+00 | 2.1E+00 | 1.8E+00 | 4.6E-01 | 7.4E+00 | 7.6E+01 | 6.9E-01 | 6.9E-01 | 5.8E+00 | 2.1E+00 | 2.1E+00 | 1.2E+02 | 1.2E+02 | 1.2E+02 | 1.2E+02 | 1.2E+02 | 1.2E+02 | 1.2E+02 | 3.7E+01 |
| Methyl ethyl ketone | 78-93-3 | ppbv | 9.2E+00 | 1.0E+00 | 1.7E+00 | 1.7E+00 | 9.2E+00 | 2.0E+00 | 1.7E+00 | 1.4E+00 | 1.4E+00 | 1.7E+00 | 1.7E+00 | 1.6E+01 | 7.5E+01 | 5.8E+00 | 5.1E+00 | 1.7E+00 | 1.4E+00 | 3.7E+01 | | | | | | | | 9.7E+00 |
| METHYL ISOBUTYL KETONE | 108-10-1 | ppbv | 4.9E+00 | 1.7E+00 | 1.7E+00 | 1.7E+00 | 1.7E+00 | 1.7E+00 | 1.7E+00 | 1.5E+00 | 1.5E+00 | 1.7E+00 | 1.7E+00 | 1.6E+01 | 7.6E+01 | 1.7E+00 | 1.7E+00 | 1.7E+00 | 1.5E+00 | 1.5E+00 | | | | | | | | 6.7E+00 |
| METHYL TERT-BUTYL ETHER | 1634-04-4 | ppbv | 8.3E-01 | 1.9E+00 | 1.7E+00 | 1.7E+00 | 1.9E+00 | 1.7E+00 | 1.7E+00 | 1.9E+00 | 1.9E+00 | 1.9E+00 | 1.7E+00 | 1.6E+01 | 7.8E+01 | 1.7E+00 | 1.7E+00 | 1.7E+00 | 1.9E+00 | 1.9E+00 | | | | | | | | 6.7E+00 |
| METHYLENE CHLORIDE | 75-09-2 | ppbv | 7.2E+00 | 1.7E+00 | 1.7E+00 | 1.7E+00 | 1.7E+00 | 5.8E-01 | 1.7E+00 | 4.9E+00 | 4.9E+00 | 8.6E-01 | 1.7E+00 | 1.3E+01 | 7.5E+01 | 1.7E+00 | 1.4E+00 | 1.7E+00 | 4.9E+00 | 4.9E+00 | 1.4E+02 | 1.4E+02 | 1.4E+02 | 1.4E+02 | 1.4E+02 | 1.4E+02 | 1.4E+02 | 4.6E+01 |
| O-XYLENE | 95-47-6 | ppbv | 1.8E+00 | 1.8E+00 | 1.8E+00 | 1.6E+00 | 1.8E+00 | 1.8E+00 | 1.6E+00 | 4.6E-01 | 9.2E-01 | 2.3E-01 | 4.6E-01 | 4.1E+00 | 7.1E+00 | 4.6E-01 | 2.3E-01 | 1.4E+00 | 4.6E-01 | 6.9E-01 | 1.2E+02 | 1.2E+02 | 1.2E+02 | 1.2E+02 | 1.2E+02 | 1.2E+02 | 1.2E+02 | 3.3E+01 |
| STYRENE | 100-42-5 | ppbv | | | | | | | | 1.4E+00 | 1.4E+00 | | | | | | | | 1.4E+00 | 1.4E+00 | | | | | | | | 1.4E+00 |
| Tetrachloroethene (PCE) | 127-18-4 | ppbv | 6.6E+02 | 4.3E+02 | 4.1E+01 | 4.3E+01 | 1.1E+01 | 2.1E+00 | 8.7E+00 | 9.3E+00 | 1.3E+01 | 2.7E+02 | 2.8E+02 | 1.9E+03 | 1.5E+04 | 1.9E+02 | 2.1E+01 | 2.7E+01 | 2.5E+01 | 6.3E+00 | 3.4E+04 | 5.8E+04 | 6.2E+03 | 7.8E+02 | 6.2E+02 | 1.5E+03 | 1.5E+03 | 4.8E+03 |
| TOLUENE | 108-88-3 | ppbv | 4.5E+00 | 2.7E-01 | 5.3E-01 | 2.7E-01 | 2.7E-01 | 1.6E+00 | 1.1E+00 | 5.3E-01 | 1.3E+00 | 1.3E+00 | 5.3E-01 | 1.7E+01 | 1.1E+01 | 1.1E+00 | 2.4E+00 | 2.1E+00 | 5.3E-01 | 1.3E+00 | 2.7E+02 | 2.7E+02 | 2.7E+02 | 2.7E+02 | 2.7E+02 | 2.7E+02 | 2.7E+02 | 7.6E+01 |
| TRANS-1,2-DICHLOROETHENE | 156-60-5 | ppbv | 7.6E-01 | 1.8E+00 | 1.8E+00 | 1.8E+00 | 1.8E+00 | 1.8E+00 | 1.8E+00 | 5.0E-01 | 5.0E-01 | 1.8E+00 | 1.8E+00 | 1.6E+01 | 7.6E+01 | 1.8E+00 | 1.8E+00 | 1.8E+00 | 5.0E-01 | 5.0E-01 | 1.3E+02 | 1.3E+02 | 1.3E+02 | 1.3E+02 | 1.3E+02 | 1.3E+02 | 1.3E+02 | 4.0E+01 |
| TRANS-1,3-DICHLOROPROPENE | 10061-02-6 | ppbv | 4.8E+00 | 1.8E+00 | 1.8E+00 | 1.8E+00 | 1.8E+00 | 1.8E+00 | 1.8E+00 | 1.1E+00 | 1.1E+00 | 1.8E+00 | 1.8E+00 | 1.6E+01 | 7.7E+01 | 1.8E+00 | 1.8E+00 | 1.8E+00 | 1.1E+00 | 1.1E+00 | | | | | | | | 6.8E+00 |
| Trichloroethene (TCE) | 79-01-6 | ppbv | 3.2E+01 | 1.5E+01 | 6.3E+00 | 4.8E+00 | 7.4E-01 | 1.7E+00 | 1.3E+00 | 1.7E+00 | 6.7E+00 | 1.2E+01 | 9.1E+00 | 2.4E+02 | 3.5E+03 | 2.4E+01 | 2.6E+00 | 4.1E+00 | 6.0E+00 | 1.7E+00 | 8.2E+03 | 1.2E+04 | 1.3E+03 | 5.8E+01 | 4.8E+01 | 1.8E+02 | 1.8E+02 | 1.0E+03 |
| VINYL ACETATE | 108-05-4 | ppbv | 2.5E+01 | 9.1E+00 | 8.8E+00 | 8.5E+00 | 9.1E+00 | 8.8E+00 | 8.5E+00 | 2.0E+00 | 2.0E+00 | 9.7E+00 | 8.8E+00 | 8.0E+01 | 3.7E+02 | 8.8E+00 | 8.8E+00 | 8.8E+00 | 2.0E+00 | 2.0E+00 | | | | | | | | 3.2E+01 |
| VINYL CHLORIDE | 75-01-4 | ppbv | 5.1E+00 | 2.0E+00 | 2.0E+00 | 1.6E+00 | 2.0E+00 | 2.0E+00 | 1.6E+00 | 3.9E-01 | 3.9E-01 | 2.0E+00 | 2.0E+00 | 1.6E+01 | 7.4E+01 | 2.0E+00 | 2.0E+00 | 2.0E+00 | 3.9E-01 | 3.9E-01 | 2.0E+01 | 2.0E+01 | 2.0E+01 | 2.0E+01 | 2.0E+01 | 2.0E+01 | 2.0E+01 | 1.0E+01 |

**Omega Chemical Site**
**Full Scale On Site Soils Remedy**
**Preliminary Design Report**
**Influent Estimate Detail for Well:** **VE-32S**
**Basis for Estimated Concentrations:** **VMP 42A**

| | | | |
|---|---|---|---|
| Performed by | JTB | Date | 10/2/2012 |
| Checked by | IL | Date | 10/10/2012 |

See Notes on Summary Tab

| Average of NumericResult2 | | | SampleLocation | SampBegDepth | SampEndDepth | Date |
|---|---|---|---|---|---|---|
| | | | VMP-42 | | | Overall Average |
| | | | 6 | 12 | 24 | |
| | | | (blank) | (blank) | (blank) | |
| **Parameter** | **CAS** | **Units2** | **3/16/2011 8:37** | **3/16/2011 8:42** | **3/16/2011 8:47** | |
| **1,1,1,2-TETRACHLOROETHANE** | **630-20-6** | ppbv | 7.3E+01 | 7.3E+01 | 7.3E+01 | 7.3E+01 |
| **1,1,1-Trichloroethane (TCA)** | **71-55-6** | ppbv | 9.2E+01 | 9.2E+01 | 9.2E+01 | 9.2E+01 |
| **1,1,2,2-TETRACHLOROETHANE** | **79-34-5** | ppbv | 7.3E+01 | 7.3E+01 | 7.3E+01 | 7.3E+01 |
| **1,1,2-TRICHLOROETHANE** | **79-00-5** | ppbv | 9.2E+01 | 9.2E+01 | 9.2E+01 | 9.2E+01 |
| **1,1-DICHLOROETHANE** | **75-34-3** | ppbv | 1.2E+02 | 1.2E+02 | 1.2E+02 | 1.2E+02 |
| **1,1-DICHLOROETHENE** | **75-35-4** | ppbv | 3.5E+04 | 4.0E+04 | 4.0E+03 | 2.7E+04 |
| **1,1-Difluoroethane** | **75-37-6** | ppbv | 3.7E+03 | 3.7E+03 | 3.7E+03 | 3.7E+03 |
| **1,2-DICHLOROETHANE** | **107-06-2** | ppbv | 2.5E+01 | 2.5E+01 | 2.5E+01 | 2.5E+01 |
| **4-Bromofluorobenzene** | **460-00-4** | ppbv | 4.1E+02 | 4.1E+02 | 4.2E+02 | 4.2E+02 |
| **BENZENE** | **71-43-2** | ppbv | 3.1E+01 | 3.1E+01 | 3.1E+01 | 3.1E+01 |
| **CARBON TETRACHLORIDE** | **56-23-5** | ppbv | 1.6E+01 | 1.6E+01 | 1.6E+01 | 1.6E+01 |
| **CHLOROETHANE** | **75-00-3** | ppbv | 1.9E+02 | 1.9E+02 | 1.9E+02 | 1.9E+02 |
| **CHLOROFORM** | **67-66-3** | ppbv | 2.0E+01 | 2.3E+01 | 2.0E+01 | 2.1E+01 |
| **CIS-1,2-DICHLOROETHENE** | **156-59-2** | ppbv | 1.3E+02 | 1.3E+02 | 1.3E+02 | 1.3E+02 |
| **ETHYLBENZENE** | **100-41-4** | ppbv | 1.2E+02 | 1.2E+02 | 1.2E+02 | 1.2E+02 |
| **Freon 11** | **75-69-4** | ppbv | 2.7E+03 | 2.5E+03 | 4.1E+02 | 1.9E+03 |
| **Freon 113** | **76-13-1** | ppbv | 7.4E+03 | 7.2E+03 | 1.1E+03 | 5.2E+03 |
| **Freon 12** | **75-71-8** | ppbv | 1.0E+02 | 1.0E+02 | 1.0E+02 | 1.0E+02 |
| **m,p-Xylene** | **1330-20-7** | ppbv | 1.2E+02 | 1.2E+02 | 1.2E+02 | 1.2E+02 |
| **METHYLENE CHLORIDE** | **75-09-2** | ppbv | 1.4E+02 | 1.4E+02 | 1.4E+02 | 1.4E+02 |
| **O-XYLENE** | **95-47-6** | ppbv | 1.2E+02 | 1.2E+02 | 1.2E+02 | 1.2E+02 |
| **Tetrachloroethene (PCE)** | **127-18-4** | ppbv | 3.4E+04 | 5.8E+04 | 6.2E+03 | 3.3E+04 |
| **TOLUENE** | **108-88-3** | ppbv | 2.7E+02 | 2.7E+02 | 2.7E+02 | 2.7E+02 |
| **TRANS-1,2-DICHLOROETHENE** | **156-60-5** | ppbv | 1.3E+02 | 1.3E+02 | 1.3E+02 | 1.3E+02 |
| **Trichloroethene (TCE)** | **79-01-6** | ppbv | 8.2E+03 | 1.2E+04 | 1.3E+03 | 7.1E+03 |
| **VINYL CHLORIDE** | **75-01-4** | ppbv | 2.0E+01 | 2.0E+01 | 2.0E+01 | 2.0E+01 |

**Omega Chemical Site**
**Full Scale On Site Soils Remedy**
**Preliminary Design Report**
**Influent Estimate Detail for Well:** **VE-33S**
**Basis for Estimated Concentrations:** **VMP 44A**

Performed by JTB Date 10/2/2012
Checked by IL Date 10/10/2012

See Notes on Summary Tab

| Average of NumericResult2 | | | SampleLocation | SampBegDepth | SampEndDepth | Date |
|---|---|---|---|---|---|---|
| | | | VMP-44 | | | Overall Average |
| | | | 6 | 12 | 24 | |
| | | | (blank) | (blank) | (blank) | |
| **Parameter** | **CAS** | **Units2** | **3/16/2011 14:06** | **3/16/2011 14:17** | **3/16/2011 14:42** | |
| **1,1,1,2-TETRACHLOROETHANE** | **630-20-6** | ppbv | 7.3E+01 | 7.3E+01 | 7.3E+01 | 7.3E+01 |
| **1,1,1-Trichloroethane (TCA)** | **71-55-6** | ppbv | 9.2E+01 | 9.2E+01 | 9.2E+01 | 9.2E+01 |
| **1,1,2,2-TETRACHLOROETHANE** | **79-34-5** | ppbv | 7.3E+01 | 7.3E+01 | 7.3E+01 | 7.3E+01 |
| **1,1,2-TRICHLOROETHANE** | **79-00-5** | ppbv | 9.2E+01 | 9.2E+01 | 9.2E+01 | 9.2E+01 |
| **1,1-DICHLOROETHANE** | **75-34-3** | ppbv | 1.2E+02 | 1.2E+02 | 1.2E+02 | 1.2E+02 |
| **1,1-DICHLOROETHENE** | **75-35-4** | ppbv | 2.1E+03 | 3.3E+03 | 4.8E+04 | 1.8E+04 |
| **1,1-Difluoroethane** | **75-37-6** | ppbv | 3.7E+03 | 3.7E+03 | 3.7E+03 | 3.7E+03 |
| **1,2-DICHLOROETHANE** | **107-06-2** | ppbv | 2.5E+01 | 2.5E+01 | 2.5E+01 | 2.5E+01 |
| **4-Bromofluorobenzene** | **460-00-4** | ppbv | 4.0E+02 | 4.0E+02 | 4.1E+02 | 4.0E+02 |
| **BENZENE** | **71-43-2** | ppbv | 3.1E+01 | 3.1E+01 | 3.1E+01 | 3.1E+01 |
| **CARBON TETRACHLORIDE** | **56-23-5** | ppbv | 1.6E+01 | 1.6E+01 | 1.6E+01 | 1.6E+01 |
| **CHLOROETHANE** | **75-00-3** | ppbv | 1.9E+02 | 1.9E+02 | 1.9E+02 | 1.9E+02 |
| **CHLOROFORM** | **67-66-3** | ppbv | 2.0E+01 | 2.0E+01 | 2.0E+01 | 2.0E+01 |
| **CIS-1,2-DICHLOROETHENE** | **156-59-2** | ppbv | 1.3E+02 | 1.3E+02 | 1.3E+02 | 1.3E+02 |
| **ETHYLBENZENE** | **100-41-4** | ppbv | 1.2E+02 | 1.2E+02 | 1.2E+02 | 1.2E+02 |
| **Freon 11** | **75-69-4** | ppbv | 3.6E+02 | 4.8E+02 | 6.1E+03 | 2.3E+03 |
| **Freon 113** | **76-13-1** | ppbv | 1.1E+03 | 1.4E+03 | 2.6E+04 | 9.5E+03 |
| **Freon 12** | **75-71-8** | ppbv | 1.0E+02 | 1.0E+02 | 1.0E+02 | 1.0E+02 |
| **m,p-Xylene** | **1330-20-7** | ppbv | 1.2E+02 | 1.2E+02 | 1.2E+02 | 1.2E+02 |
| **METHYLENE CHLORIDE** | **75-09-2** | ppbv | 1.4E+02 | 1.4E+02 | 1.4E+02 | 1.4E+02 |
| **O-XYLENE** | **95-47-6** | ppbv | 1.2E+02 | 1.2E+02 | 1.2E+02 | 1.2E+02 |
| **Tetrachloroethene (PCE)** | **127-18-4** | ppbv | 4.1E+03 | 3.1E+03 | 5.8E+04 | 2.2E+04 |
| **TOLUENE** | **108-88-3** | ppbv | 2.7E+02 | 2.7E+02 | 2.7E+02 | 2.7E+02 |
| **TRANS-1,2-DICHLOROETHENE** | **156-60-5** | ppbv | 1.3E+02 | 1.3E+02 | 1.3E+02 | 1.3E+02 |
| **Trichloroethene (TCE)** | **79-01-6** | ppbv | 3.2E+02 | 3.7E+02 | 7.3E+03 | 2.6E+03 |
| **VINYL CHLORIDE** | **75-01-4** | ppbv | 2.0E+01 | 2.0E+01 | 2.0E+01 | 2.0E+01 |

**Omega Chemical Site**
**Full Scale On Site Soils Remedy**
**Preliminary Design Report**
**Influent Estimate Detail for Well:** VE-34S
**Basis for Estimated Concentrations:** VMPs 38A and 32A

Performed by JTB Date 10/2/2012
Checked by IL Date 10/10/2012

See Notes on Summary Tab

| Average of NumericResult2 | | | SampleLocation | SampBegDepth | SampEndDepth | Date | | | | | | |
|---|---|---|---|---|---|---|---|---|---|---|---|---|
| | | | VMP-32 | | | | VMP-38 | | | | | Overall Average |
| | | | 6 | 12 | 24 | | 6 | 12 | | 24 | | |
| | | | (blank) | (blank) | (blank) | | (blank) | 12 | (blank) | 24 | (blank) | |
| Parameter | CAS | Units2 | 3/3/2011 9:38 | 3/3/2011 10:03 | 3/3/2011 10:25 | 6/12/2012 16:33 | 3/4/2011 14:22 | 3/4/2011 14:45 | 3/4/2011 14:22 | 3/4/2011 14:45 | 3/4/2011 15:12 | 3/4/2011 14:58 | |
| 1,1,1,2-TETRACHLOROETHANE | 630-20-6 | ppbv | 7.3E+01 | 7.3E+01 | 7.3E+01 | | 7.3E+01 | | 1.5E+03 | 7.0E+02 | | 1.5E+03 | 5.6E+02 |
| 1,1,1-Trichloroethane (TCA) | 71-55-6 | ppbv | 9.2E+01 | 9.2E+01 | 9.2E+01 | 5.5E-01 | 9.2E+01 | 7.0E+02 | 1.8E+03 | | 1.0E+03 | 1.8E+03 | 6.4E+02 |
| 1,1,2,2-TETRACHLOROETHANE | 79-34-5 | ppbv | 7.3E+01 | 7.3E+01 | 7.3E+01 | 1.0E+00 | 7.3E+01 | | 1.5E+03 | 1.4E+03 | 1.0E+03 | 1.5E+03 | 6.2E+02 |
| 1,1,2-TRICHLOROETHANE | 79-00-5 | ppbv | 9.2E+01 | 9.2E+01 | 9.2E+01 | 5.5E-01 | 9.2E+01 | 7.0E+02 | 1.8E+03 | | 1.0E+03 | 1.8E+03 | 6.4E+02 |
| 1,1-DICHLOROETHANE | 75-34-3 | ppbv | 1.2E+02 | 1.2E+02 | 1.2E+02 | 4.9E-01 | 1.2E+02 | 6.9E+02 | 2.5E+03 | | 2.0E+03 | 2.5E+03 | 9.1E+02 |
| 1,1-DICHLOROETHENE | 75-35-4 | ppbv | 1.3E+02 | 9.8E+02 | 5.8E+02 | 5.0E-01 | 1.4E+05 | 1.1E+05 | 2.3E+05 | | 1.4E+05 | 2.5E+05 | 9.6E+04 |
| 1,1-Difluoroethane | 75-37-6 | ppbv | 3.7E+03 | 3.7E+03 | 3.7E+03 | | 3.7E+03 | | 3.7E+03 | | | 3.7E+03 | 3.7E+03 |
| 1,2,4-TRICHLOROBENZENE | 120-82-1 | ppbv | | | | 2.0E+00 | | 1.3E+03 | | | 1.0E+03 | | 7.9E+02 |
| 1,2,4-TRIMETHYLBENZENE | 95-63-6 | ppbv | | | | 1.4E+00 | | 1.4E+03 | | | 1.0E+03 | | 8.1E+02 |
| 1,2-Dibromoethane (EDB) | 106-93-4 | ppbv | | | | 5.2E-01 | | 7.0E+02 | | | 1.0E+03 | | 5.7E+02 |
| 1,2-DICHLOROBENZENE | 95-50-1 | ppbv | | | | 5.0E-01 | | 7.0E+02 | | | 1.0E+03 | | 5.7E+02 |
| 1,2-DICHLOROETHANE | 107-06-2 | ppbv | 2.5E+01 | 2.5E+01 | 2.5E+01 | 4.9E-01 | 2.5E+01 | 6.9E+02 | 4.9E+02 | | 1.0E+03 | 4.9E+02 | 3.1E+02 |
| 1,2-DICHLOROPROPANE | 78-87-5 | ppbv | | | | 4.3E-01 | | 6.9E+02 | | | 2.0E+03 | | 9.1E+02 |
| 1,2-Dichlorotetrafluoroethane | 76-14-2 | ppbv | | | | 2.0E+00 | | 7.0E+02 | | | 2.0E+03 | | 9.0E+02 |
| 1,3,5-TRIMETHYLBENZENE | 108-67-8 | ppbv | | | | 6.1E-01 | | 1.4E+03 | | | 1.0E+03 | | 8.1E+02 |
| 1,3-DICHLOROBENZENE | 541-73-1 | ppbv | | | | 5.0E-01 | | 7.0E+02 | | | 1.0E+03 | | 5.7E+02 |
| 1,4-DICHLOROBENZENE | 106-46-7 | ppbv | | | | 5.0E-01 | | 7.0E+02 | | | 1.0E+03 | | 5.7E+02 |
| 1,4-DIOXANE | 123-91-1 | ppbv | | | | 1.0E+01 | | 3.6E+03 | | | | | 1.8E+03 |
| 2-HEXANONE | 591-78-6 | ppbv | | | | 1.5E+00 | | 7.1E+02 | | | 1.0E+03 | | 5.7E+02 |
| 4-Bromofluorobenzene | 460-00-4 | ppbv | 2.9E+02 | 4.0E+02 | 4.0E+02 | | 4.0E+02 | | 4.0E+02 | | 9.0E+01 | 3.9E+02 | 3.4E+02 |
| 4-ETHYLTOLUENE | 622-96-8 | ppbv | | | | 6.1E-01 | | 6.9E+02 | | | 1.0E+03 | | 5.7E+02 |
| ACETONE | 67-64-1 | ppbv | | | | 5.0E+01 | | 1.7E+03 | | | 3.1E+05 | | 1.0E+05 |
| BENZENE | 71-43-2 | ppbv | 3.1E+01 | 3.1E+01 | 3.1E+01 | 6.3E-01 | 3.1E+01 | 2.3E+02 | 6.3E+02 | | 1.0E+03 | 6.3E+02 | 2.9E+02 |
| BENZYL CHLORIDE | 100-44-7 | ppbv | | | | 1.5E+00 | | 7.0E+02 | | | | | 3.5E+02 |
| BROMODICHLOROMETHANE | 75-27-4 | ppbv | | | | 4.5E-01 | | 7.0E+02 | | | 1.0E+03 | | 5.7E+02 |
| BROMOFORM | 75-25-2 | ppbv | | | | 4.8E-01 | | 7.0E+02 | | | 9.7E+02 | | 5.5E+02 |
| BROMOMETHANE | 74-83-9 | ppbv | | | | 5.2E-01 | | 7.0E+02 | | | 2.0E+03 | | 9.1E+02 |
| CARBON DISULFIDE | 75-15-0 | ppbv | | | | 1.9E+00 | | 4.8E+02 | | | 1.0E+03 | | 5.0E+02 |
| CARBON TETRACHLORIDE | 56-23-5 | ppbv | 1.6E+01 | 1.6E+01 | 1.6E+01 | 4.8E-01 | 1.6E+01 | 7.0E+02 | 3.2E+02 | | 4.1E+02 | 3.2E+02 | 2.0E+02 |
| CHLOROBENZENE | 108-90-7 | ppbv | | | | 4.3E-01 | | 7.0E+02 | | | 1.0E+03 | | 5.7E+02 |
| CHLOROETHANE | 75-00-3 | ppbv | 1.9E+02 | 1.9E+02 | 1.9E+02 | 3.8E-01 | 1.9E+02 | 6.8E+02 | 3.8E+03 | | 2.0E+03 | 3.8E+03 | 1.2E+03 |
| CHLOROFORM | 67-66-3 | ppbv | 2.0E+01 | 2.0E+01 | 2.0E+01 | 4.1E-01 | 5.5E+01 | 7.0E+02 | 4.1E+02 | | 1.0E+03 | 4.1E+02 | 3.0E+02 |
| CHLOROMETHANE | 74-87-3 | ppbv | | | | 4.8E-01 | | 1.4E+03 | | | 2.0E+03 | | 1.1E+03 |
| CIS-1,2-DICHLOROETHENE | 156-59-2 | ppbv | 1.3E+02 | 1.3E+02 | 1.3E+02 | 5.0E-01 | 1.3E+02 | 7.1E+02 | 2.5E+03 | | 2.0E+03 | 2.5E+03 | 9.2E+02 |
| CIS-1,3-DICHLOROPROPENE | 10061-01-5 | ppbv | | | | 4.4E-01 | | 7.1E+02 | | | 1.0E+03 | | 5.7E+02 |
| DIBROMOCHLOROMETHANE | 124-48-1 | ppbv | | | | 4.7E-01 | | 6.9E+02 | | | 1.0E+03 | | 5.7E+02 |
| ETHYLBENZENE | 100-41-4 | ppbv | 1.2E+02 | 1.2E+02 | 1.2E+02 | 4.6E-01 | 1.2E+02 | 6.9E+02 | 2.3E+03 | | 1.0E+03 | 2.3E+03 | 7.5E+02 |
| Freon 11 | 75-69-4 | ppbv | 8.9E+01 | 6.1E+02 | 3.7E+02 | 1.1E+00 | 3.2E+04 | 2.8E+04 | 5.2E+04 | | 3.6E+04 | 5.2E+04 | 2.2E+04 |
| Freon 113 | 76-13-1 | ppbv | 1.3E+02 | 2.5E+03 | 1.8E+03 | 1.4E+00 | 1.4E+05 | 1.2E+05 | 2.5E+05 | | 1.6E+05 | 2.5E+05 | 1.0E+05 |
| Freon 12 | 75-71-8 | ppbv | 1.0E+02 | 1.0E+02 | 1.0E+02 | 6.1E-01 | 1.9E+02 | 2.0E+02 | 2.0E+03 | | 1.0E+03 | 2.0E+03 | 6.4E+02 |
| HEXACHLOROBUTADIENE | 87-68-3 | ppbv | | | | 1.5E+00 | | 6.9E+02 | | | 1.0E+03 | | 5.8E+02 |
| HEXANE (N-HEXANE) | 110-54-3 | ppbv | | | | 2.0E+00 | | 3.4E+03 | | | | | 1.7E+03 |
| ISOPROPYL ALCOHOL (ISOPROPANOL) | 67-63-0 | ppbv | | | | 4.9E+00 | | 3.5E+03 | | | | | 1.8E+03 |
| m,p-Xylene | 1330-20-7 | ppbv | 1.2E+02 | 1.2E+02 | 1.2E+02 | 2.1E+00 | 1.2E+02 | 2.0E+02 | 2.3E+03 | | 2.0E+03 | 2.3E+03 | 8.1E+02 |
| Methyl ethyl ketone | 78-93-3 | ppbv | | | | 4.4E+00 | | 7.1E+02 | | | 2.0E+03 | | 9.2E+02 |
| METHYL ISOBUTYL KETONE | 108-10-1 | ppbv | | | | 1.5E+00 | | 7.1E+02 | | | 1.0E+03 | | 5.7E+02 |
| METHYL TERT-BUTYL ETHER | 1634-04-4 | ppbv | | | | 1.9E+00 | | 6.9E+02 | | | | | 3.5E+02 |
| METHYLENE CHLORIDE | 75-09-2 | ppbv | 1.4E+02 | 1.4E+02 | 1.4E+02 | 4.9E+00 | 1.4E+02 | 6.9E+02 | 2.9E+03 | | 1.0E+03 | 2.9E+03 | 8.9E+02 |
| O-XYLENE | 95-47-6 | ppbv | 1.2E+02 | 1.2E+02 | 1.2E+02 | 4.6E-01 | 1.2E+02 | 6.9E+02 | 2.3E+03 | | 1.0E+03 | 2.3E+03 | 7.5E+02 |
| STYRENE | 100-42-5 | ppbv | | | | 1.4E+00 | | 2.1E+02 | | | 1.0E+03 | | 4.1E+02 |
| Tetrachloroethene (PCE) | 127-18-4 | ppbv | 5.0E+03 | 3.2E+03 | 1.1E+03 | 2.4E+02 | 1.1E+05 | 6.9E+04 | 1.8E+05 | | 6.9E+04 | 1.4E+05 | 6.5E+04 |
| TOLUENE | 108-88-3 | ppbv | 2.7E+02 | 2.7E+02 | 2.7E+02 | 5.3E-01 | 2.7E+02 | 2.9E+02 | 5.3E+03 | | 1.0E+03 | 5.3E+03 | 1.4E+03 |
| TRANS-1,2-DICHLOROETHENE | 156-60-5 | ppbv | 1.3E+02 | 1.3E+02 | 1.3E+02 | 5.0E-01 | 1.3E+02 | 7.1E+02 | 2.5E+03 | | 2.0E+03 | 2.5E+03 | 9.2E+02 |
| TRANS-1,3-DICHLOROPROPENE | 10061-02-6 | ppbv | | | | 1.1E+00 | | 7.1E+02 | | | 1.0E+03 | | 5.7E+02 |
| Trichloroethene (TCE) | 79-01-6 | ppbv | 3.2E+01 | 1.3E+02 | 5.4E+01 | 1.3E+00 | 9.7E+03 | 7.4E+03 | 1.3E+04 | | 8.9E+03 | 1.4E+04 | 5.9E+03 |
| VINYL ACETATE | 108-05-4 | ppbv | | | | 2.0E+00 | | 3.4E+03 | | | | | 1.7E+03 |
| VINYL CHLORIDE | 75-01-4 | ppbv | 2.0E+01 | 2.0E+01 | 2.0E+01 | 3.9E-01 | 2.0E+01 | 7.0E+02 | 3.9E+02 | | 1.0E+03 | 3.9E+02 | 2.9E+02 |

**Omega Chemical Site**
**Full Scale On Site Soils Remedy** Performed by JTB Date 10/2/2012
**Preliminary Design Report** Checked by IL Date 10/10/2012
**Influent Estimate Detail for Well:** VE-35S
**Basis for Estimated Concentrations:** VMPs 38A, 45A, and 33A

See Notes on Summary Tab

| Average of NumericResult2 | | | SampleLocation | SampBegDepth | SampEndDepth | Date | | | | | | | | | | | | | | |
|---|---|---|---|---|---|---|---|---|---|---|---|---|---|---|---|---|---|---|---|---|
| | | | VMP-33 | | | | | VMP-38 | | | | | VMP-45 | | | | | | | Overall Average |
| | | | 6 | 12 | 24 | | | 6 | 12 | | | 24 | 6 | | | 12 | 24 | | | |
| | | | 6 | (blank) | (blank) | (blank) | | (blank) | 12 | (blank) | | 24 | (blank) | 6 | (blank) | (blank) | (blank) | | | |
| Parameter | CAS | Units2 | 3/3/2011 14:45 | 3/3/2011 13:02 | 3/3/2011 13:31 | 3/3/2011 14:13 | 3/3/2011 14:14 | 6/12/2012 16:23 | 3/4/2011 14:22 | 3/4/2011 14:45 | 3/4/2011 14:22 | 3/4/2011 14:45 | 3/4/2011 15:12 | 3/4/2011 14:58 | 3/18/2011 10:59 | 3/18/2011 10:57 | 3/18/2011 10:59 | 3/18/2011 11:08 | 3/18/2011 12:19 | |
| 1,1,1,2-TETRACHLOROETHANE | 630-20-6 | ppbv | | 7.3E+01 | 7.3E+01 | 7.3E+01 | 7.3E+01 | | 7.3E+01 | | 1.5E+03 | 7.0E+02 | | 1.5E+03 | | 7.3E+01 | 2.0E+02 | 1.5E+02 | 1.5E+03 | 4.9E+02 |
| 1,1,1-Trichloroethane (TCA) | 71-55-6 | ppbv | 1.0E+02 | 9.2E+01 | 9.2E+01 | 9.2E+01 | 9.2E+01 | 5.5E-01 | 9.2E+01 | 7.0E+02 | 1.8E+03 | | 1.0E+03 | 1.8E+03 | 2.0E+02 | 9.2E+01 | | 1.8E+02 | 1.8E+03 | 5.5E+02 |
| 1,1,2,2-TETRACHLOROETHANE | 79-34-5 | ppbv | 1.0E+02 | 7.3E+01 | 7.3E+01 | 7.3E+01 | 7.3E+01 | 1.0E+00 | 7.3E+01 | | 1.5E+03 | 1.4E+03 | 1.0E+03 | 1.5E+03 | | 7.3E+01 | 4.1E+02 | 1.5E+02 | 1.5E+03 | 5.3E+02 |
| 1,1,2-TRICHLOROETHANE | 79-00-5 | ppbv | 1.0E+02 | 9.2E+01 | 9.2E+01 | 9.2E+01 | 9.2E+01 | 5.5E-01 | 9.2E+01 | 7.0E+02 | 1.8E+03 | | 1.0E+03 | 1.8E+03 | 2.0E+02 | 9.2E+01 | | 1.8E+02 | 1.8E+03 | 5.5E+02 |
| 1,1-DICHLOROETHANE | 75-34-3 | ppbv | 2.0E+02 | 1.2E+02 | 1.2E+02 | 1.2E+02 | 1.2E+02 | 4.9E-01 | 1.2E+02 | 6.9E+02 | 2.5E+03 | | 2.0E+03 | 2.5E+03 | 2.0E+02 | 1.2E+02 | | 2.5E+02 | 2.5E+03 | 7.7E+02 |
| 1,1-DICHLOROETHENE | 75-35-4 | ppbv | 1.0E+02 | 1.3E+02 | 1.3E+02 | 2.4E+02 | 2.5E+02 | 5.0E-01 | 1.4E+05 | 1.1E+05 | 2.3E+05 | | 1.4E+05 | 2.5E+05 | 3.0E+04 | 3.8E+04 | | 1.2E+05 | 1.2E+05 | 7.8E+04 |
| 1,1-Difluoroethane | 75-37-6 | ppbv | | 3.7E+03 | 3.7E+03 | 3.7E+03 | 3.7E+03 | | 3.7E+03 | | 3.7E+03 | | | 3.7E+03 | | 3.7E+03 | | 3.7E+03 | 3.7E+03 | 3.7E+03 |
| 1,2,4-TRICHLOROBENZENE | 120-82-1 | ppbv | 1.0E+02 | | | | | 2.0E+00 | | 1.3E+03 | | | 1.0E+03 | | 4.0E+02 | | | | | 5.7E+02 |
| 1,2,4-TRIMETHYLBENZENE | 95-63-6 | ppbv | 1.0E+02 | | | | | 1.4E+00 | | 1.4E+03 | | | 1.0E+03 | | 2.4E+02 | | | | | 5.5E+02 |
| 1,2-Dibromoethane (EDB) | 106-93-4 | ppbv | 1.0E+02 | | | | | 5.2E-01 | | 7.0E+02 | | | 1.0E+03 | | 2.1E+02 | | | | | 4.1E+02 |
| 1,2-DICHLOROBENZENE | 95-50-1 | ppbv | 1.0E+02 | | | | | 5.0E-01 | | 7.0E+02 | | | 1.0E+03 | | 2.0E+02 | | | | | 4.0E+02 |
| 1,2-DICHLOROETHANE | 107-06-2 | ppbv | 1.0E+02 | 2.5E+01 | 2.5E+01 | 2.5E+01 | 2.5E+01 | 4.9E-01 | 2.5E+01 | 6.9E+02 | 4.9E+02 | | 1.0E+03 | 4.9E+02 | 2.0E+02 | 2.5E+01 | | 4.9E+01 | 4.9E+02 | 2.5E+02 |
| 1,2-DICHLOROPROPANE | 78-87-5 | ppbv | 2.0E+02 | | | | | 4.3E-01 | | 6.9E+02 | | | 2.0E+03 | | 2.0E+02 | | | | | 6.3E+02 |
| 1,2-Dichlorotetrafluoroethane | 76-14-2 | ppbv | 2.0E+02 | | | | | 2.0E+00 | | 7.0E+02 | | | 2.0E+03 | | 2.0E+02 | | | | | 6.2E+02 |
| 1,3,5-TRIMETHYLBENZENE | 108-67-8 | ppbv | 1.0E+02 | | | | | 6.1E-01 | | 1.4E+03 | | | 1.0E+03 | | 9.8E+01 | | | | | 5.2E+02 |
| 1,3-DICHLOROBENZENE | 541-73-1 | ppbv | 1.0E+02 | | | | | 5.0E-01 | | 7.0E+02 | | | 1.0E+03 | | 2.0E+02 | | | | | 4.0E+02 |
| 1,4-DICHLOROBENZENE | 106-46-7 | ppbv | 1.0E+02 | | | | | 5.0E-01 | | 7.0E+02 | | | 1.0E+03 | | 2.0E+02 | | | | | 4.0E+02 |
| 1,4-DIOXANE | 123-91-1 | ppbv | 2.0E+02 | | | | | 1.0E+01 | | 3.6E+03 | | | | | 1.0E+03 | | | | | 1.2E+03 |
| 2-HEXANONE | 591-78-6 | ppbv | 1.0E+02 | | | | | 1.5E+00 | | 7.1E+02 | | | 1.0E+03 | | 2.0E+02 | | | | | 4.0E+02 |
| 4-Bromofluorobenzene | 460-00-4 | ppbv | 9.1E+01 | 4.3E+02 | 4.3E+02 | 4.3E+02 | 4.6E+02 | | 4.0E+02 | | 4.0E+02 | | 9.0E+01 | 3.9E+02 | | 3.7E+02 | | 4.1E+02 | 4.2E+02 | 3.6E+02 |
| 4-ETHYLTOLUENE | 622-96-8 | ppbv | 1.0E+02 | | | | | 6.1E-01 | | 6.9E+02 | | | 1.0E+03 | | 2.2E+02 | | | | | 4.1E+02 |
| ACETONE | 67-64-1 | ppbv | 8.8E+02 | | | | | 1.6E+01 | | 1.7E+03 | | | 3.1E+05 | | 9.7E+02 | | | | | 6.2E+04 |
| BENZENE | 71-43-2 | ppbv | 1.0E+02 | 3.1E+01 | 3.1E+01 | 3.1E+01 | 3.4E+01 | 6.3E-01 | 3.1E+01 | 2.3E+02 | 6.3E+02 | | 1.0E+03 | 6.3E+02 | 1.3E+02 | 3.1E+01 | | 6.3E+01 | 6.3E+02 | 2.4E+02 |
| BENZYL CHLORIDE | 100-44-7 | ppbv | 1.9E+02 | | | | | 1.5E+00 | | 7.0E+02 | | | | | 1.9E+02 | | | | | 2.7E+02 |
| BROMODICHLOROMETHANE | 75-27-4 | ppbv | 1.0E+02 | | | | | 4.5E-01 | | 7.0E+02 | | | 1.0E+03 | | 2.1E+02 | | | | | 4.1E+02 |
| BROMOFORM | 75-25-2 | ppbv | 9.7E+01 | | | | | 4.8E-01 | | 7.0E+02 | | | 9.7E+02 | | 2.0E+02 | | | | | 3.9E+02 |
| BROMOMETHANE | 74-83-9 | ppbv | 2.0E+02 | | | | | 5.2E-01 | | 7.0E+02 | | | 2.0E+03 | | 2.0E+02 | | | | | 6.3E+02 |
| CARBON DISULFIDE | 75-15-0 | ppbv | 1.0E+02 | | | | | 1.9E+00 | | 4.8E+02 | | | 1.0E+03 | | 2.3E+02 | | | | | 3.7E+02 |
| CARBON TETRACHLORIDE | 56-23-5 | ppbv | 4.1E+01 | 1.6E+01 | 1.6E+01 | 1.6E+01 | 1.6E+01 | 4.8E-01 | 1.6E+01 | 7.0E+02 | 3.2E+02 | | 4.1E+02 | 3.2E+02 | 2.1E+02 | 1.6E+01 | | 3.2E+01 | 3.2E+02 | 1.6E+02 |
| CHLOROBENZENE | 108-90-7 | ppbv | 1.0E+02 | | | | | 4.3E-01 | | 7.0E+02 | | | 1.0E+03 | | 2.0E+02 | | | | | 4.0E+02 |
| CHLOROETHANE | 75-00-3 | ppbv | 2.0E+02 | 1.9E+02 | 1.9E+02 | 1.9E+02 | 1.9E+02 | 3.8E-01 | 1.9E+02 | 6.8E+02 | 3.8E+03 | | 2.0E+03 | 3.8E+03 | 2.0E+02 | 1.9E+02 | | 3.8E+02 | 3.8E+03 | 1.1E+03 |
| CHLOROFORM | 67-66-3 | ppbv | 1.0E+02 | 2.0E+01 | 2.0E+01 | 1.4E+02 | 1.4E+02 | 4.1E-01 | 5.5E+01 | 7.0E+02 | 4.1E+02 | | 1.0E+03 | 4.1E+02 | 1.5E+02 | 1.4E+02 | | 2.3E+02 | 4.1E+02 | 2.6E+02 |
| CHLOROMETHANE | 74-87-3 | ppbv | 2.0E+02 | | | | | 4.8E-01 | | 1.4E+03 | | | 2.0E+03 | | 4.1E+02 | | | | | 8.1E+02 |
| CIS-1,2-DICHLOROETHENE | 156-59-2 | ppbv | 2.0E+02 | 1.3E+02 | 1.3E+02 | 1.3E+02 | 1.3E+02 | 5.0E-01 | 1.3E+02 | 7.1E+02 | 2.5E+03 | | 2.0E+03 | 2.5E+03 | 2.0E+02 | 1.3E+02 | | 2.5E+02 | 2.5E+03 | 7.8E+02 |
| CIS-1,3-DICHLOROPROPENE | 10061-01-5 | ppbv | 1.0E+02 | | | | | 4.4E-01 | | 7.1E+02 | | | 1.0E+03 | | 2.0E+02 | | | | | 4.0E+02 |
| DIBROMOCHLOROMETHANE | 124-48-1 | ppbv | 1.0E+02 | | | | | 4.7E-01 | | 6.9E+02 | | | 1.0E+03 | | 2.0E+02 | | | | | 4.0E+02 |
| ETHYLBENZENE | 100-41-4 | ppbv | 1.0E+02 | 1.2E+02 | 1.2E+02 | 1.2E+02 | 1.2E+02 | 4.6E-01 | 1.2E+02 | 6.9E+02 | 2.3E+03 | | 1.0E+03 | 2.3E+03 | 2.2E+02 | 1.2E+02 | | 2.3E+02 | 2.3E+03 | 6.6E+02 |
| Freon 11 | 75-69-4 | ppbv | 1.0E+02 | 8.9E+01 | 8.9E+01 | 8.9E+01 | 8.9E+01 | 1.1E+00 | 3.2E+04 | 2.8E+04 | 5.2E+04 | | 3.6E+04 | 5.2E+04 | 1.1E+04 | 1.2E+04 | | 6.4E+04 | 6.1E+04 | 2.3E+04 |
| Freon 113 | 76-13-1 | ppbv | 1.0E+02 | 6.5E+01 | 6.5E+01 | 6.5E+01 | 6.5E+01 | 1.4E+00 | 1.4E+05 | 1.2E+05 | 2.5E+05 | | 1.6E+05 | 2.5E+05 | 3.4E+04 | 5.0E+04 | | 2.9E+05 | 3.3E+05 | 1.1E+05 |
| Freon 12 | 75-71-8 | ppbv | 1.0E+02 | 1.0E+02 | 1.0E+02 | 1.0E+02 | 1.0E+02 | 6.1E-01 | 1.9E+02 | 2.0E+02 | 2.0E+03 | | 1.0E+03 | 2.0E+03 | 7.1E+01 | 1.0E+02 | | 3.2E+02 | 2.0E+03 | 5.6E+02 |
| HEXACHLOROBUTADIENE | 87-68-3 | ppbv | 1.0E+02 | | | | | 1.5E+00 | | 6.9E+02 | | | 1.0E+03 | | 2.1E+02 | | | | | 4.1E+02 |
| HEXANE (N-HEXANE) | 110-54-3 | ppbv | 1.0E+02 | | | | | 2.0E+00 | | 3.4E+03 | | | | | 6.0E+01 | | | | | 8.9E+02 |
| ISOPROPYL ALCOHOL (ISOPROPANOL) | 67-63-0 | ppbv | 2.0E+02 | | | | | 4.9E+00 | | 3.5E+03 | | | | | 9.8E+01 | | | | | 9.5E+02 |
| m,p-Xylene | 1330-20-7 | ppbv | 2.0E+02 | 1.2E+02 | 1.2E+02 | 1.2E+02 | 1.2E+02 | 2.1E+00 | 1.2E+02 | 2.0E+02 | 2.3E+03 | | 2.0E+03 | 2.3E+03 | 5.5E+02 | 1.2E+02 | | 2.3E+02 | 2.3E+03 | 7.2E+02 |
| Methyl ethyl ketone | 78-93-3 | ppbv | 2.0E+02 | | | | | 1.4E+00 | | 7.1E+02 | | | 2.0E+03 | | 2.1E+02 | | | | | 6.3E+02 |
| METHYL ISOBUTYL KETONE | 108-10-1 | ppbv | 1.0E+02 | | | | | 1.5E+00 | | 7.1E+02 | | | 1.0E+03 | | 2.0E+02 | | | | | 4.0E+02 |
| METHYL TERT-BUTYL ETHER | 1634-04-4 | ppbv | 1.0E+02 | | | | | 1.9E+00 | | 6.9E+02 | | | | | 2.0E+02 | | | | | 2.5E+02 |
| METHYLENE CHLORIDE | 75-09-2 | ppbv | 1.0E+02 | 1.4E+02 | 1.4E+02 | 1.4E+02 | 1.4E+02 | 4.9E+00 | 1.4E+02 | 6.9E+02 | 2.9E+03 | | 1.0E+03 | 2.9E+03 | 2.0E+02 | 1.4E+02 | | 2.9E+02 | 2.9E+03 | 7.9E+02 |
| O-XYLENE | 95-47-6 | ppbv | 1.0E+02 | 1.2E+02 | 1.2E+02 | 1.2E+02 | 1.2E+02 | 4.6E-01 | 1.2E+02 | 6.9E+02 | 2.3E+03 | | 1.0E+03 | 2.3E+03 | 2.0E+02 | 1.2E+02 | | 2.3E+02 | 2.3E+03 | 6.6E+02 |
| STYRENE | 100-42-5 | ppbv | 1.0E+02 | | | | | 1.4E+00 | | 2.1E+02 | | | 1.0E+03 | | 3.5E+02 | | | | | 3.3E+02 |
| Tetrachloroethene (PCE) | 127-18-4 | ppbv | 5.8E+03 | 7.2E+03 | 3.4E+03 | 1.3E+04 | 1.4E+04 | 4.1E+02 | 1.1E+05 | 6.9E+04 | 1.8E+05 | | 6.9E+04 | 1.4E+05 | 1.5E+04 | 3.7E+04 | | 5.9E+04 | 1.2E+04 | 4.9E+04 |
| TOLUENE | 108-88-3 | ppbv | 1.0E+02 | 2.7E+02 | 2.7E+02 | 2.7E+02 | 2.7E+02 | 5.3E-01 | 2.7E+02 | 2.9E+02 | 5.3E+03 | | 1.0E+03 | 5.3E+03 | 4.8E+02 | 2.7E+02 | | 5.3E+02 | 5.3E+03 | 1.3E+03 |
| TRANS-1,2-DICHLOROETHENE | 156-60-5 | ppbv | 2.0E+02 | 1.3E+02 | 1.3E+02 | 1.3E+02 | 1.3E+02 | 5.0E-01 | 1.3E+02 | 7.1E+02 | 2.5E+03 | | 2.0E+03 | 2.5E+03 | 2.0E+02 | 1.3E+02 | | 2.5E+02 | 2.5E+03 | 7.8E+02 |
| TRANS-1,3-DICHLOROPROPENE | 10061-02-6 | ppbv | 1.0E+02 | | | | | 1.1E+00 | | 7.1E+02 | | | 1.0E+03 | | 2.0E+02 | | | | | 4.0E+02 |
| Trichloroethene (TCE) | 79-01-6 | ppbv | 1.4E+02 | 1.2E+02 | 1.9E+01 | 6.5E+02 | 6.9E+02 | 1.7E+00 | 9.7E+03 | 7.4E+03 | 1.3E+04 | | 8.9E+03 | 1.4E+04 | 3.2E+03 | 5.2E+03 | | 9.3E+03 | 4.1E+03 | 5.1E+03 |
| VINYL ACETATE | 108-05-4 | ppbv | 1.0E+02 | | | | | 2.0E+00 | | 3.4E+03 | | | | | 1.0E+03 | | | | | 1.1E+03 |
| VINYL CHLORIDE | 75-01-4 | ppbv | 1.0E+02 | 2.0E+01 | 2.0E+01 | 2.0E+01 | 2.0E+01 | 3.9E-01 | 2.0E+01 | 7.0E+02 | 3.9E+02 | | 1.0E+03 | 3.9E+02 | 2.0E+02 | 2.0E+01 | | 3.9E+01 | 3.9E+02 | 2.2E+02 |

**Omega Chemical Site**
**Full Scale On Site Soils Remedy**
**Preliminary Design Report**
**Influent Estimate Detail for Well:** VE-36S
**Basis for Estimated Concentrations:** VMPs 45A and 44A

Performed by JTB Date 10/2/2012
Checked by IL Date 10/10/2012

See Notes on Summary Tab

| Average of NumericResult2 | | | SampleLocation | SampBegDepth | SampEndDepth | Date | | | | |
|---|---|---|---|---|---|---|---|---|---|---|
| | | | VMP-44 | | | VMP-45 | | | | Overall Average |
| | | | 6 | 12 | 24 | 6 | | 12 | 24 | |
| | | | (blank) | (blank) | (blank) | 6 | (blank) | (blank) | (blank) | |
| Parameter | CAS | Units2 | 3/16/2011 14:06 | 3/16/2011 14:17 | 3/16/2011 14:42 | 3/18/2011 10:59 | 3/18/2011 10:57 | 3/18/2011 10:59 3/18/2011 11:08 | 3/18/2011 12:19 | |
| 1,1,1,2-TETRACHLOROETHANE | 630-20-6 | ppbv | 7.3E+01 | 7.3E+01 | 7.3E+01 | | 7.3E+01 | 2.0E+02 1.5E+02 | 1.5E+03 | 3.0E+02 |
| 1,1,1-Trichloroethane (TCA) | 71-55-6 | ppbv | 9.2E+01 | 9.2E+01 | 9.2E+01 | 2.0E+02 | 9.2E+01 | 1.8E+02 | 1.8E+03 | 3.7E+02 |
| 1,1,2,2-TETRACHLOROETHANE | 79-34-5 | ppbv | 7.3E+01 | 7.3E+01 | 7.3E+01 | | 7.3E+01 | 4.1E+02 1.5E+02 | 1.5E+03 | 3.3E+02 |
| 1,1,2-TRICHLOROETHANE | 79-00-5 | ppbv | 9.2E+01 | 9.2E+01 | 9.2E+01 | 2.0E+02 | 9.2E+01 | 1.8E+02 | 1.8E+03 | 3.7E+02 |
| 1,1-DICHLOROETHANE | 75-34-3 | ppbv | 1.2E+02 | 1.2E+02 | 1.2E+02 | 2.0E+02 | 1.2E+02 | 2.5E+02 | 2.5E+03 | 4.9E+02 |
| 1,1-DICHLOROETHENE | 75-35-4 | ppbv | 2.1E+03 | 3.3E+03 | 4.8E+04 | 3.0E+04 | 3.8E+04 | 1.2E+05 | 1.2E+05 | 5.2E+04 |
| 1,1-Difluoroethane | 75-37-6 | ppbv | 3.7E+03 | 3.7E+03 | 3.7E+03 | | 3.7E+03 | 3.7E+03 | 3.7E+03 | 3.7E+03 |
| 1,2,4-TRICHLOROBENZENE | 120-82-1 | ppbv | | | | 4.0E+02 | | | | 4.0E+02 |
| 1,2,4-TRIMETHYLBENZENE | 95-63-6 | ppbv | | | | 2.4E+02 | | | | 2.4E+02 |
| 1,2-Dibromoethane (EDB) | 106-93-4 | ppbv | | | | 2.1E+02 | | | | 2.1E+02 |
| 1,2-DICHLOROBENZENE | 95-50-1 | ppbv | | | | 2.0E+02 | | | | 2.0E+02 |
| 1,2-DICHLOROETHANE | 107-06-2 | ppbv | 2.5E+01 | 2.5E+01 | 2.5E+01 | 2.0E+02 | 2.5E+01 | 4.9E+01 | 4.9E+02 | 1.2E+02 |
| 1,2-DICHLOROPROPANE | 78-87-5 | ppbv | | | | 2.0E+02 | | | | 2.0E+02 |
| 1,2-Dichlorotetrafluoroethane | 76-14-2 | ppbv | | | | 2.0E+02 | | | | 2.0E+02 |
| 1,3,5-TRIMETHYLBENZENE | 108-67-8 | ppbv | | | | 9.8E+01 | | | | 9.8E+01 |
| 1,3-DICHLOROBENZENE | 541-73-1 | ppbv | | | | 2.0E+02 | | | | 2.0E+02 |
| 1,4-DICHLOROBENZENE | 106-46-7 | ppbv | | | | 2.0E+02 | | | | 2.0E+02 |
| 1,4-DIOXANE | 123-91-1 | ppbv | | | | 1.0E+03 | | | | 1.0E+03 |
| 2-HEXANONE | 591-78-6 | ppbv | | | | 2.0E+02 | | | | 2.0E+02 |
| 4-Bromofluorobenzene | 460-00-4 | ppbv | 4.0E+02 | 4.0E+02 | 4.1E+02 | | 3.7E+02 | 4.1E+02 | 4.2E+02 | 4.0E+02 |
| 4-ETHYLTOLUENE | 622-96-8 | ppbv | | | | 2.2E+02 | | | | 2.2E+02 |
| ACETONE | 67-64-1 | ppbv | | | | 9.7E+02 | | | | 9.7E+02 |
| BENZENE | 71-43-2 | ppbv | 3.1E+01 | 3.1E+01 | 3.1E+01 | 1.3E+02 | 3.1E+01 | 6.3E+01 | 6.3E+02 | 1.3E+02 |
| BENZYL CHLORIDE | 100-44-7 | ppbv | | | | 1.9E+02 | | | | 1.9E+02 |
| BROMODICHLOROMETHANE | 75-27-4 | ppbv | | | | 2.1E+02 | | | | 2.1E+02 |
| BROMOFORM | 75-25-2 | ppbv | | | | 2.0E+02 | | | | 2.0E+02 |
| BROMOMETHANE | 74-83-9 | ppbv | | | | 2.0E+02 | | | | 2.0E+02 |
| CARBON DISULFIDE | 75-15-0 | ppbv | | | | 2.3E+02 | | | | 2.3E+02 |
| CARBON TETRACHLORIDE | 56-23-5 | ppbv | 1.6E+01 | 1.6E+01 | 1.6E+01 | 2.1E+02 | 1.6E+01 | 3.2E+01 | 3.2E+02 | 8.9E+01 |
| CHLOROBENZENE | 108-90-7 | ppbv | | | | 2.0E+02 | | | | 2.0E+02 |
| CHLOROETHANE | 75-00-3 | ppbv | 1.9E+02 | 1.9E+02 | 1.9E+02 | 2.0E+02 | 1.9E+02 | 3.8E+02 | 3.8E+03 | 7.3E+02 |
| CHLOROFORM | 67-66-3 | ppbv | 2.0E+01 | 2.0E+01 | 2.0E+01 | 1.5E+02 | 1.4E+02 | 2.3E+02 | 4.1E+02 | 1.4E+02 |
| CHLOROMETHANE | 74-87-3 | ppbv | | | | 4.1E+02 | | | | 4.1E+02 |
| CIS-1,2-DICHLOROETHENE | 156-59-2 | ppbv | 1.3E+02 | 1.3E+02 | 1.3E+02 | 2.0E+02 | 1.3E+02 | 2.5E+02 | 2.5E+03 | 5.0E+02 |
| CIS-1,3-DICHLOROPROPENE | 10061-01-5 | ppbv | | | | 2.0E+02 | | | | 2.0E+02 |
| DIBROMOCHLOROMETHANE | 124-48-1 | ppbv | | | | 2.0E+02 | | | | 2.0E+02 |
| ETHYLBENZENE | 100-41-4 | ppbv | 1.2E+02 | 1.2E+02 | 1.2E+02 | 2.2E+02 | 1.2E+02 | 2.3E+02 | 2.3E+03 | 4.6E+02 |
| Freon 11 | 75-69-4 | ppbv | 3.6E+02 | 4.8E+02 | 6.1E+03 | 1.1E+04 | 1.2E+04 | 6.4E+04 | 6.1E+04 | 2.2E+04 |
| Freon 113 | 76-13-1 | ppbv | 1.1E+03 | 1.4E+03 | 2.6E+04 | 3.4E+04 | 5.0E+04 | 2.9E+05 | 3.3E+05 | 1.0E+05 |
| Freon 12 | 75-71-8 | ppbv | 1.0E+02 | 1.0E+02 | 1.0E+02 | 7.1E+01 | 1.0E+02 | 3.2E+02 | 2.0E+03 | 4.0E+02 |
| HEXACHLOROBUTADIENE | 87-68-3 | ppbv | | | | 2.1E+02 | | | | 2.1E+02 |
| HEXANE (N-HEXANE) | 110-54-3 | ppbv | | | | 6.0E+01 | | | | 6.0E+01 |
| ISOPROPYL ALCOHOL (ISOPROPANOL) | 67-63-0 | ppbv | | | | 9.8E+01 | | | | 9.8E+01 |
| m,p-Xylene | 1330-20-7 | ppbv | 1.2E+02 | 1.2E+02 | 1.2E+02 | 5.5E+02 | 1.2E+02 | 2.3E+02 | 2.3E+03 | 5.1E+02 |
| Methyl ethyl ketone | 78-93-3 | ppbv | | | | 2.1E+02 | | | | 2.1E+02 |
| METHYL ISOBUTYL KETONE | 108-10-1 | ppbv | | | | 2.0E+02 | | | | 2.0E+02 |
| METHYL TERT-BUTYL ETHER | 1634-04-4 | ppbv | | | | 2.0E+02 | | | | 2.0E+02 |
| METHYLENE CHLORIDE | 75-09-2 | ppbv | 1.4E+02 | 1.4E+02 | 1.4E+02 | 2.0E+02 | 1.4E+02 | 2.9E+02 | 2.9E+03 | 5.6E+02 |
| O-XYLENE | 95-47-6 | ppbv | 1.2E+02 | 1.2E+02 | 1.2E+02 | 2.0E+02 | 1.2E+02 | 2.3E+02 | 2.3E+03 | 4.6E+02 |
| STYRENE | 100-42-5 | ppbv | | | | 3.5E+02 | | | | 3.5E+02 |
| Tetrachloroethene (PCE) | 127-18-4 | ppbv | 4.1E+03 | 3.1E+03 | 5.8E+04 | 1.5E+04 | 3.7E+04 | 5.9E+04 | 1.2E+04 | 2.7E+04 |
| TOLUENE | 108-88-3 | ppbv | 2.7E+02 | 2.7E+02 | 2.7E+02 | 4.8E+02 | 2.7E+02 | 5.3E+02 | 5.3E+03 | 1.1E+03 |
| TRANS-1,2-DICHLOROETHENE | 156-60-5 | ppbv | 1.3E+02 | 1.3E+02 | 1.3E+02 | 2.0E+02 | 1.3E+02 | 2.5E+02 | 2.5E+03 | 5.0E+02 |
| TRANS-1,3-DICHLOROPROPENE | 10061-02-6 | ppbv | | | | 2.0E+02 | | | | 2.0E+02 |
| Trichloroethene (TCE) | 79-01-6 | ppbv | 3.2E+02 | 3.7E+02 | 7.3E+03 | 3.2E+03 | 5.2E+03 | 9.3E+03 | 4.1E+03 | 4.2E+03 |
| VINYL ACETATE | 108-05-4 | ppbv | | | | 1.0E+03 | | | | 1.0E+03 |
| VINYL CHLORIDE | 75-01-4 | ppbv | 2.0E+01 | 2.0E+01 | 2.0E+01 | 2.0E+02 | 2.0E+01 | 3.9E+01 | 3.9E+02 | 1.0E+02 |

**Omega Chemical Site**
**Full Scale On Site Soils Remedy**
**Preliminary Design Report**
**Influent Estimate Detail for Well:** VE-37S
**Basis for Estimated Concentrations:** VMPs 45A and 46A

Performed by JTB Date 10/2/2012
Checked by IL Date 10/10/2012

See Notes on Summary Tab

| Average of NumericResult2 | | | SampleLocation | SampBegDepth | SampEndDepth | Date | | | | | | | |
|---|---|---|---|---|---|---|---|---|---|---|---|---|---|
| | | | VMP-45 | | | | | VMP-46 | | | | | Overall Average |
| | | | 6 | | | 12 | 24 | 6 | | 12 | 24 | | |
| | | | 6 | (blank) | | (blank) | (blank) | (blank) | | (blank) | 24 (blank) | | |
| **Parameter** | **CAS** | **Units2** | **3/18/2011 10:59** | **3/18/2011 10:57** | **3/18/2011 10:59** | **3/18/2011 11:08** | **3/18/2011 12:19** | **3/21/2011 11:03** | **3/21/2011 11:04** | **3/21/2011 11:08** | **3/21/2011 11:24** | **3/21/2011 11:14** | **3/21/2011 11:24** | |
| 1,1,1,2-TETRACHLOROETHANE | 630-20-6 | ppbv | | 7.3E+01 | 2.0E+02 | 1.5E+02 | 1.5E+03 | 7.3E+01 | 7.3E+01 | 7.3E+01 | | 7.3E+01 | 3.4E+02 | 2.8E+02 |
| 1,1,1-Trichloroethane (TCA) | 71-55-6 | ppbv | 2.0E+02 | 9.2E+01 | | 1.8E+02 | 1.8E+03 | 9.2E+01 | 9.2E+01 | 9.2E+01 | 3.3E+02 | 9.2E+01 | | 3.3E+02 |
| 1,1,2,2-TETRACHLOROETHANE | 79-34-5 | ppbv | | 7.3E+01 | 4.1E+02 | 1.5E+02 | 1.5E+03 | 7.3E+01 | 7.3E+01 | 7.3E+01 | | 7.3E+01 | 6.6E+02 | 3.4E+02 |
| 1,1,2-TRICHLOROETHANE | 79-00-5 | ppbv | 2.0E+02 | 9.2E+01 | | 1.8E+02 | 1.8E+03 | 9.2E+01 | 9.2E+01 | 9.2E+01 | 3.3E+02 | 9.2E+01 | | 3.3E+02 |
| 1,1-DICHLOROETHANE | 75-34-3 | ppbv | 2.0E+02 | 1.2E+02 | | 2.5E+02 | 2.5E+03 | 1.2E+02 | 1.2E+02 | 1.2E+02 | 3.2E+02 | 1.2E+02 | | 4.3E+02 |
| 1,1-DICHLOROETHENE | 75-35-4 | ppbv | 3.0E+04 | 3.8E+04 | | 1.2E+05 | 1.2E+05 | 1.8E+02 | 1.3E+02 | 2.3E+04 | 1.5E+04 | 2.1E+04 | | 4.1E+04 |
| 1,1-Difluoroethane | 75-37-6 | ppbv | | 3.7E+03 | | 3.7E+03 | 3.7E+03 | 3.7E+03 | 3.7E+03 | 3.7E+03 | | 3.7E+03 | | 3.7E+03 |
| 1,2,4-TRICHLOROBENZENE | 120-82-1 | ppbv | 4.0E+02 | | | | | | | | 6.6E+02 | | | 5.3E+02 |
| 1,2,4-TRIMETHYLBENZENE | 95-63-6 | ppbv | 2.4E+02 | | | | | | | | 6.5E+02 | | | 4.5E+02 |
| 1,2-Dibromoethane (EDB) | 106-93-4 | ppbv | 2.1E+02 | | | | | | | | 3.3E+02 | | | 2.7E+02 |
| 1,2-DICHLOROBENZENE | 95-50-1 | ppbv | 2.0E+02 | | | | | | | | 3.3E+02 | | | 2.7E+02 |
| 1,2-DICHLOROETHANE | 107-06-2 | ppbv | 2.0E+02 | 2.5E+01 | | 4.9E+01 | 4.9E+02 | 2.5E+01 | 2.5E+01 | 2.5E+01 | 3.2E+02 | 2.5E+01 | | 1.3E+02 |
| 1,2-DICHLOROPROPANE | 78-87-5 | ppbv | 2.0E+02 | | | | | | | | 3.2E+02 | | | 2.6E+02 |
| 1,2-Dichlorotetrafluoroethane | 76-14-2 | ppbv | 2.0E+02 | | | | | | | | 3.3E+02 | | | 2.6E+02 |
| 1,3,5-TRIMETHYLBENZENE | 108-67-8 | ppbv | 9.8E+01 | | | | | | | | 6.5E+02 | | | 3.7E+02 |
| 1,3-DICHLOROBENZENE | 541-73-1 | ppbv | 2.0E+02 | | | | | | | | 3.3E+02 | | | 2.7E+02 |
| 1,4-DICHLOROBENZENE | 106-46-7 | ppbv | 2.0E+02 | | | | | | | | 3.3E+02 | | | 2.7E+02 |
| 1,4-DIOXANE | 123-91-1 | ppbv | 1.0E+03 | | | | | | | | 1.6E+03 | | | 1.3E+03 |
| 2-HEXANONE | 591-78-6 | ppbv | 2.0E+02 | | | | | | | | 3.2E+02 | | | 2.6E+02 |
| 4-Bromofluorobenzene | 460-00-4 | ppbv | | 3.7E+02 | | 4.1E+02 | 4.2E+02 | 4.0E+02 | 4.1E+02 | 4.1E+02 | | 4.0E+02 | | 4.0E+02 |
| 4-ETHYLTOLUENE | 622-96-8 | ppbv | 2.2E+02 | | | | | | | | 3.3E+02 | | | 2.7E+02 |
| ACETONE | 67-64-1 | ppbv | 9.7E+02 | | | | | | | | 1.4E+03 | | | 1.2E+03 |
| BENZENE | 71-43-2 | ppbv | 1.3E+02 | 3.1E+01 | | 6.3E+01 | 6.3E+02 | 3.1E+01 | 3.1E+01 | 3.1E+01 | 1.0E+02 | 3.1E+01 | | 1.2E+02 |
| BENZYL CHLORIDE | 100-44-7 | ppbv | 1.9E+02 | | | | | | | | 3.3E+02 | | | 2.6E+02 |
| BROMODICHLOROMETHANE | 75-27-4 | ppbv | 2.1E+02 | | | | | | | | 3.3E+02 | | | 2.7E+02 |
| BROMOFORM | 75-25-2 | ppbv | 2.0E+02 | | | | | | | | 3.3E+02 | | | 2.7E+02 |
| BROMOMETHANE | 74-83-9 | ppbv | 2.0E+02 | | | | | | | | 3.3E+02 | | | 2.7E+02 |
| CARBON DISULFIDE | 75-15-0 | ppbv | 2.3E+02 | | | | | | | | 6.1E+02 | | | 4.2E+02 |
| CARBON TETRACHLORIDE | 56-23-5 | ppbv | 2.1E+02 | 1.6E+01 | | 3.2E+01 | 3.2E+02 | 1.6E+01 | 1.6E+01 | 1.6E+01 | 3.3E+02 | 1.6E+01 | | 1.1E+02 |
| CHLOROBENZENE | 108-90-7 | ppbv | 2.0E+02 | | | | | | | | 3.3E+02 | | | 2.6E+02 |
| CHLOROETHANE | 75-00-3 | ppbv | 2.0E+02 | 1.9E+02 | | 3.8E+02 | 3.8E+03 | 1.9E+02 | 1.9E+02 | 1.9E+02 | 3.3E+02 | 1.9E+02 | | 6.3E+02 |
| CHLOROFORM | 67-66-3 | ppbv | 1.5E+02 | 1.4E+02 | | 2.3E+02 | 4.1E+02 | 6.3E+01 | 4.5E+01 | 7.8E+01 | 1.3E+02 | 6.8E+01 | | 1.4E+02 |
| CHLOROMETHANE | 74-87-3 | ppbv | 4.1E+02 | | | | | | | | 6.8E+02 | | | 5.4E+02 |
| CIS-1,2-DICHLOROETHENE | 156-59-2 | ppbv | 2.0E+02 | 1.3E+02 | | 2.5E+02 | 2.5E+03 | 1.3E+02 | 1.3E+02 | 1.3E+02 | 3.3E+02 | 1.3E+02 | | 4.4E+02 |
| CIS-1,3-DICHLOROPROPENE | 10061-01-5 | ppbv | 2.0E+02 | | | | | | | | 3.3E+02 | | | 2.7E+02 |
| DIBROMOCHLOROMETHANE | 124-48-1 | ppbv | 2.0E+02 | | | | | | | | 3.3E+02 | | | 2.6E+02 |
| ETHYLBENZENE | 100-41-4 | ppbv | 2.2E+02 | 1.2E+02 | | 2.3E+02 | 2.3E+03 | 1.2E+02 | 1.2E+02 | 1.2E+02 | 3.2E+02 | 1.2E+02 | | 4.1E+02 |
| Freon 11 | 75-69-4 | ppbv | 1.1E+04 | 1.2E+04 | | 6.4E+04 | 6.1E+04 | 8.9E+01 | 8.9E+01 | 1.5E+04 | 1.5E+04 | 1.5E+04 | | 2.1E+04 |
| Freon 113 | 76-13-1 | ppbv | 3.4E+04 | 5.0E+04 | | 2.9E+05 | 3.3E+05 | 1.3E+02 | 6.5E+01 | 7.6E+04 | 4.8E+04 | 1.3E+05 | | 1.1E+05 |
| Freon 12 | 75-71-8 | ppbv | 7.1E+01 | 1.0E+02 | | 3.2E+02 | 2.0E+03 | 1.0E+02 | 1.0E+02 | 1.0E+02 | 5.1E+01 | 1.0E+02 | | 3.3E+02 |
| HEXACHLOROBUTADIENE | 87-68-3 | ppbv | 2.1E+02 | | | | | | | | 3.3E+02 | | | 2.7E+02 |
| HEXANE (N-HEXANE) | 110-54-3 | ppbv | 6.0E+01 | | | | | | | | 4.8E+01 | | | 5.4E+01 |
| ISOPROPYL ALCOHOL (ISOPROPANOL) | 67-63-0 | ppbv | 9.8E+01 | | | | | | | | 1.6E+03 | | | 8.6E+02 |
| m,p-Xylene | 1330-20-7 | ppbv | 5.5E+02 | 1.2E+02 | | 2.3E+02 | 2.3E+03 | 1.2E+02 | 1.2E+02 | 1.2E+02 | 1.2E+02 | 1.2E+02 | | 4.2E+02 |
| Methyl ethyl ketone | 78-93-3 | ppbv | 2.1E+02 | | | | | | | | 3.3E+02 | | | 2.7E+02 |
| METHYL ISOBUTYL KETONE | 108-10-1 | ppbv | 2.0E+02 | | | | | | | | 3.2E+02 | | | 2.6E+02 |
| METHYL TERT-BUTYL ETHER | 1634-04-4 | ppbv | 2.0E+02 | | | | | | | | 3.3E+02 | | | 2.7E+02 |
| METHYLENE CHLORIDE | 75-09-2 | ppbv | 2.0E+02 | 1.4E+02 | | 2.9E+02 | 2.9E+03 | 1.4E+02 | 1.4E+02 | 1.4E+02 | 3.2E+02 | 1.4E+02 | | 4.9E+02 |
| O-XYLENE | 95-47-6 | ppbv | 2.0E+02 | 1.2E+02 | | 2.3E+02 | 2.3E+03 | 1.2E+02 | 1.2E+02 | 1.2E+02 | 3.2E+02 | 1.2E+02 | | 4.0E+02 |
| STYRENE | 100-42-5 | ppbv | 3.5E+02 | | | | | | | | 2.3E+02 | | | 2.9E+02 |
| Tetrachloroethene (PCE) | 127-18-4 | ppbv | 1.5E+04 | 3.7E+04 | | 5.9E+04 | 1.2E+04 | 1.8E+02 | 1.8E+02 | 4.9E+03 | 1.1E+03 | 1.8E+03 | | 1.5E+04 |
| TOLUENE | 108-88-3 | ppbv | 4.8E+02 | 2.7E+02 | | 5.3E+02 | 5.3E+03 | 2.7E+02 | 2.7E+02 | 2.7E+02 | 2.5E+02 | 2.7E+02 | | 8.8E+02 |
| TRANS-1,2-DICHLOROETHENE | 156-60-5 | ppbv | 2.0E+02 | 1.3E+02 | | 2.5E+02 | 2.5E+03 | 1.3E+02 | 1.3E+02 | 1.3E+02 | 3.3E+02 | 1.3E+02 | | 4.4E+02 |
| TRANS-1,3-DICHLOROPROPENE | 10061-02-6 | ppbv | 2.0E+02 | | | | | | | | 3.3E+02 | | | 2.7E+02 |
| Trichloroethene (TCE) | 79-01-6 | ppbv | 3.2E+03 | 5.2E+03 | | 9.3E+03 | 4.1E+03 | 8.4E+01 | 7.6E+01 | 8.6E+03 | 2.6E+03 | 4.5E+03 | | 4.2E+03 |
| VINYL ACETATE | 108-05-4 | ppbv | 1.0E+03 | | | | | | | | 1.6E+03 | | | 1.3E+03 |
| VINYL CHLORIDE | 75-01-4 | ppbv | 2.0E+02 | 2.0E+01 | | 3.9E+01 | 3.9E+02 | 2.0E+01 | 2.0E+01 | 2.0E+01 | 3.3E+02 | 2.0E+01 | | 1.2E+02 |

**Omega Chemical Site**
**Full Scale On Site Soils Remedy**
**Preliminary Design Report**
**Influent Estimate Detail for Well:** VE-38S
**Basis for Estimated Concentrations:** VMPs 45A and 34A

Performed by JTB Date 10/2/2012
Checked by IL Date 10/10/2012

See Notes on Summary Tab

| Average of NumericResult2 | | | SampleLocation | SampBegDepth | SampEndDepth | Date | | | | | | | |
|---|---|---|---|---|---|---|---|---|---|---|---|---|---|
| | | | VMP-34 | | | | | VMP-45 | | | | | Overall Average |
| | | | 6 | 12 | 24 | | | 6 | | | 12 | 24 | |
| | | | (blank) | (blank) | (blank) | | | 6 | (blank) | | (blank) | (blank) | |
| Parameter | CAS | Units2 | 3/4/2011 12:24 | 3/4/2011 12:45 | 3/4/2011 13:51 | 6/12/2012 11:28 | 6/12/2012 11:33 | 3/18/2011 10:59 | 3/18/2011 10:57 | 3/18/2011 10:59 | 3/18/2011 11:08 | 3/18/2011 12:19 | |
| 1,1,1,2-TETRACHLOROETHANE | 630-20-6 | ppbv | 7.3E+01 | 1.5E+03 | 1.5E+03 | | | | 7.3E+01 | 2.0E+02 | 1.5E+02 | 1.5E+03 | 7.0E+02 |
| 1,1,1-Trichloroethane (TCA) | 71-55-6 | ppbv | 9.2E+01 | 1.8E+03 | 1.8E+03 | 2.0E+01 | 2.0E+01 | 2.0E+02 | 9.2E+01 | | 1.8E+02 | 1.8E+03 | 6.8E+02 |
| 1,1,2,2-TETRACHLOROETHANE | 79-34-5 | ppbv | 7.3E+01 | 1.5E+03 | 1.5E+03 | 3.9E+01 | 3.9E+01 | | 7.3E+01 | 4.1E+02 | 1.5E+02 | 1.5E+03 | 5.7E+02 |
| 1,1,2-TRICHLOROETHANE | 79-00-5 | ppbv | 9.2E+01 | 1.8E+03 | 1.8E+03 | 2.0E+01 | 2.0E+01 | 2.0E+02 | 9.2E+01 | | 1.8E+02 | 1.8E+03 | 6.8E+02 |
| 1,1-DICHLOROETHANE | 75-34-3 | ppbv | 1.2E+02 | 2.5E+03 | 2.5E+03 | 2.0E+01 | 2.0E+01 | 2.0E+02 | 1.2E+02 | | 2.5E+02 | 2.5E+03 | 9.1E+02 |
| 1,1-DICHLOROETHENE | 75-35-4 | ppbv | 6.6E+04 | 6.3E+04 | 4.0E+04 | 8.1E+02 | 8.3E+02 | 3.0E+04 | 3.8E+04 | | 1.2E+05 | 1.2E+05 | 5.3E+04 |
| 1,1-Difluoroethane | 75-37-6 | ppbv | 3.7E+03 | 3.7E+03 | 3.7E+03 | | | | 3.7E+03 | | 3.7E+03 | 3.7E+03 | 3.7E+03 |
| 1,2,4-TRICHLOROBENZENE | 120-82-1 | ppbv | | | | 7.9E+01 | 7.9E+01 | 4.0E+02 | | | | | 1.9E+02 |
| 1,2,4-TRIMETHYLBENZENE | 95-63-6 | ppbv | | | | 5.9E+01 | 5.9E+01 | 2.4E+02 | | | | | 1.2E+02 |
| 1,2-Dibromoethane (EDB) | 106-93-4 | ppbv | | | | 2.0E+01 | 2.0E+01 | 2.1E+02 | | | | | 8.2E+01 |
| 1,2-DICHLOROBENZENE | 95-50-1 | ppbv | | | | 2.0E+01 | 2.0E+01 | 2.0E+02 | | | | | 8.0E+01 |
| 1,2-DICHLOROETHANE | 107-06-2 | ppbv | 2.5E+01 | 4.9E+02 | 4.9E+02 | 2.0E+01 | 2.0E+01 | 2.0E+02 | 2.5E+01 | | 4.9E+01 | 4.9E+02 | 2.0E+02 |
| 1,2-DICHLOROPROPANE | 78-87-5 | ppbv | | | | 2.0E+01 | 2.0E+01 | 2.0E+02 | | | | | 8.0E+01 |
| 1,2-Dichlorotetrafluoroethane | 76-14-2 | ppbv | | | | 8.0E+01 | 8.0E+01 | 2.0E+02 | | | | | 1.2E+02 |
| 1,3,5-TRIMETHYLBENZENE | 108-67-8 | ppbv | | | | 2.0E+01 | 2.0E+01 | 9.8E+01 | | | | | 4.6E+01 |
| 1,3-DICHLOROBENZENE | 541-73-1 | ppbv | | | | 2.0E+01 | 2.0E+01 | 2.0E+02 | | | | | 8.0E+01 |
| 1,4-DICHLOROBENZENE | 106-46-7 | ppbv | | | | 2.0E+01 | 2.0E+01 | 2.0E+02 | | | | | 8.0E+01 |
| 1,4-DIOXANE | 123-91-1 | ppbv | | | | 3.9E+02 | 3.9E+02 | 1.0E+03 | | | | | 5.9E+02 |
| 2-HEXANONE | 591-78-6 | ppbv | | | | 6.1E+01 | 6.1E+01 | 2.0E+02 | | | | | 1.1E+02 |
| 4-Bromofluorobenzene | 460-00-4 | ppbv | 4.4E+02 | 4.6E+02 | 4.1E+02 | | | | 3.7E+02 | | 4.1E+02 | 4.2E+02 | 4.2E+02 |
| 4-ETHYLTOLUENE | 622-96-8 | ppbv | | | | 2.0E+01 | 2.0E+01 | 2.2E+02 | | | | | 8.8E+01 |
| ACETONE | 67-64-1 | ppbv | | | | 1.6E+02 | 8.0E+01 | 9.7E+02 | | | | | 4.0E+02 |
| BENZENE | 71-43-2 | ppbv | 3.1E+01 | 6.3E+02 | 6.3E+02 | 2.0E+01 | 2.0E+01 | 1.3E+02 | 3.1E+01 | | 6.3E+01 | 6.3E+02 | 2.4E+02 |
| BENZYL CHLORIDE | 100-44-7 | ppbv | | | | 6.0E+01 | 6.0E+01 | 1.9E+02 | | | | | 1.0E+02 |
| BROMODICHLOROMETHANE | 75-27-4 | ppbv | | | | 1.9E+01 | 1.9E+01 | 2.1E+02 | | | | | 8.3E+01 |
| BROMOFORM | 75-25-2 | ppbv | | | | 2.0E+01 | 2.0E+01 | 2.0E+02 | | | | | 8.1E+01 |
| BROMOMETHANE | 74-83-9 | ppbv | | | | 2.0E+01 | 2.0E+01 | 2.0E+02 | | | | | 8.1E+01 |
| CARBON DISULFIDE | 75-15-0 | ppbv | | | | 8.0E+01 | 8.0E+01 | 2.3E+02 | | | | | 1.3E+02 |
| CARBON TETRACHLORIDE | 56-23-5 | ppbv | 1.6E+01 | 3.2E+02 | 3.2E+02 | 2.1E+01 | 2.1E+01 | 2.1E+02 | 1.6E+01 | | 3.2E+01 | 3.2E+02 | 1.4E+02 |
| CHLOROBENZENE | 108-90-7 | ppbv | | | | 2.0E+01 | 2.0E+01 | 2.0E+02 | | | | | 8.1E+01 |
| CHLOROETHANE | 75-00-3 | ppbv | 1.9E+02 | 3.8E+03 | 3.8E+03 | 2.0E+01 | 2.0E+01 | 2.0E+02 | 1.9E+02 | | 3.8E+02 | 3.8E+03 | 1.4E+03 |
| CHLOROFORM | 67-66-3 | ppbv | 4.5E+02 | 7.0E+02 | 1.5E+03 | 8.8E+01 | 1.2E+02 | 1.5E+02 | 1.4E+02 | | 2.3E+02 | 4.1E+02 | 4.2E+02 |
| CHLOROMETHANE | 74-87-3 | ppbv | | | | 2.0E+01 | 2.0E+01 | 4.1E+02 | | | | | 1.5E+02 |
| CIS-1,2-DICHLOROETHENE | 156-59-2 | ppbv | 1.3E+02 | 2.5E+03 | 2.5E+03 | 2.0E+01 | 2.0E+01 | 2.0E+02 | 1.3E+02 | | 2.5E+02 | 2.5E+03 | 9.2E+02 |
| CIS-1,3-DICHLOROPROPENE | 10061-01-5 | ppbv | | | | 2.0E+01 | 2.0E+01 | 2.0E+02 | | | | | 8.1E+01 |
| DIBROMOCHLOROMETHANE | 124-48-1 | ppbv | | | | 2.0E+01 | 2.0E+01 | 2.0E+02 | | | | | 8.0E+01 |
| ETHYLBENZENE | 100-41-4 | ppbv | 1.2E+02 | 2.3E+03 | 2.3E+03 | 2.0E+01 | 2.0E+01 | 2.2E+02 | 1.2E+02 | | 2.3E+02 | 2.3E+03 | 8.5E+02 |
| Freon 11 | 75-69-4 | ppbv | 1.2E+04 | 1.8E+04 | 7.8E+03 | 3.4E+02 | 2.8E+02 | 1.1E+04 | 1.2E+04 | | 6.4E+04 | 6.1E+04 | 2.1E+04 |
| Freon 113 | 76-13-1 | ppbv | 5.7E+04 | 5.3E+04 | 1.7E+04 | 1.1E+03 | 7.6E+02 | 3.4E+04 | 5.0E+04 | | 2.9E+05 | 3.3E+05 | 9.2E+04 |
| Freon 12 | 75-71-8 | ppbv | 1.0E+02 | 2.0E+03 | 2.0E+03 | 2.0E+01 | 2.0E+01 | 7.1E+01 | 1.0E+02 | | 3.2E+02 | 2.0E+03 | 7.4E+02 |
| HEXACHLOROBUTADIENE | 87-68-3 | ppbv | | | | 6.0E+01 | 6.0E+01 | 2.1E+02 | | | | | 1.1E+02 |
| HEXANE (N-HEXANE) | 110-54-3 | ppbv | | | | 7.9E+01 | 7.9E+01 | 6.0E+01 | | | | | 7.3E+01 |
| ISOPROPYL ALCOHOL (ISOPROPANOL) | 67-63-0 | ppbv | | | | 2.0E+02 | 2.0E+02 | 9.8E+01 | | | | | 1.7E+02 |
| m,p-Xylene | 1330-20-7 | ppbv | 1.2E+02 | 2.3E+03 | 2.3E+03 | 8.1E+01 | 8.1E+01 | 5.5E+02 | 1.2E+02 | | 2.3E+02 | 2.3E+03 | 9.0E+02 |
| Methyl ethyl ketone | 78-93-3 | ppbv | | | | 6.1E+01 | 6.1E+01 | 2.1E+02 | | | | | 1.1E+02 |
| METHYL ISOBUTYL KETONE | 108-10-1 | ppbv | | | | 6.1E+01 | 6.1E+01 | 2.0E+02 | | | | | 1.1E+02 |
| METHYL TERT-BUTYL ETHER | 1634-04-4 | ppbv | | | | 8.0E+01 | 8.0E+01 | 2.0E+02 | | | | | 1.2E+02 |
| METHYLENE CHLORIDE | 75-09-2 | ppbv | 1.4E+02 | 2.9E+03 | 2.9E+03 | 2.0E+02 | 2.0E+02 | 2.0E+02 | 1.4E+02 | | 2.9E+02 | 2.9E+03 | 1.1E+03 |
| O-XYLENE | 95-47-6 | ppbv | 1.2E+02 | 2.3E+03 | 2.3E+03 | 2.0E+01 | 2.0E+01 | 2.0E+02 | 1.2E+02 | | 2.3E+02 | 2.3E+03 | 8.5E+02 |
| STYRENE | 100-42-5 | ppbv | | | | 6.1E+01 | 6.1E+01 | 3.5E+02 | | | | | 1.6E+02 |
| Tetrachloroethene (PCE) | 127-18-4 | ppbv | 9.1E+04 | 8.7E+04 | 2.8E+04 | 1.8E+04 | 2.5E+04 | 1.5E+04 | 3.7E+04 | | 5.9E+04 | 1.2E+04 | 4.1E+04 |
| TOLUENE | 108-88-3 | ppbv | 2.7E+02 | 5.3E+03 | 5.3E+03 | 2.0E+01 | 2.0E+01 | 4.8E+02 | 2.7E+02 | | 5.3E+02 | 5.3E+03 | 1.9E+03 |
| TRANS-1,2-DICHLOROETHENE | 156-60-5 | ppbv | 1.3E+02 | 2.5E+03 | 2.5E+03 | 2.0E+01 | 2.0E+01 | 2.0E+02 | 1.3E+02 | | 2.5E+02 | 2.5E+03 | 9.2E+02 |
| TRANS-1,3-DICHLOROPROPENE | 10061-02-6 | ppbv | | | | 4.0E+01 | 4.0E+01 | 2.0E+02 | | | | | 9.4E+01 |
| Trichloroethene (TCE) | 79-01-6 | ppbv | 7.6E+03 | 7.4E+03 | 4.1E+03 | 7.3E+02 | 8.4E+02 | 3.2E+03 | 5.2E+03 | | 9.3E+03 | 4.1E+03 | 4.7E+03 |
| VINYL ACETATE | 108-05-4 | ppbv | | | | 8.0E+01 | 8.0E+01 | 1.0E+03 | | | | | 3.9E+02 |
| VINYL CHLORIDE | 75-01-4 | ppbv | 2.0E+01 | 3.9E+02 | 3.9E+02 | 2.0E+01 | 2.0E+01 | 2.0E+02 | 2.0E+01 | | 3.9E+01 | 3.9E+02 | 1.7E+02 |

**Omega Chemical Site**
**Full Scale On Site Soils Remedy**
**Preliminary Design Report**
**Influent Estimate Detail for Well:** VE-39S
**Basis for Estimated Concentrations:** VMPs 32A and 33A

Performed by JTB Date 10/2/2012
Checked by IL Date 10/10/2012

See Notes on Summary Tab

| Average of NumericResult2 | | | SampleLocation | SampBegDepth | SampEndDepth | Date | | | | | | | Overall Average |
|---|---|---|---|---|---|---|---|---|---|---|---|---|---|
| | | | VMP-32 | | | | VMP-33 | | | | | | |
| | | | 6 | 12 | 24 | | 6 | | 12 | 24 | | | |
| | | | (blank) | (blank) | (blank) | | 6 | (blank) | (blank) | (blank) | | | |
| Parameter | CAS | Units2 | 3/3/2011 9:38 | 3/3/2011 10:03 | 3/3/2011 10:25 | 6/12/2012 16:33 | 3/3/2011 14:45 | 3/3/2011 13:02 | 3/3/2011 13:31 | 3/3/2011 14:13 | 3/3/2011 14:14 | 6/12/2012 16:23 | |
| 1,1,1,2-TETRACHLOROETHANE | 630-20-6 | ppbv | 7.3E+01 | 7.3E+01 | 7.3E+01 | | | 7.3E+01 | 7.3E+01 | 7.3E+01 | 7.3E+01 | | 7.3E+01 |
| 1,1,1-Trichloroethane (TCA) | 71-55-6 | ppbv | 9.2E+01 | 9.2E+01 | 9.2E+01 | 5.5E-01 | 1.0E+02 | 9.2E+01 | 9.2E+01 | 9.2E+01 | 9.2E+01 | 5.5E-01 | 7.4E+01 |
| 1,1,2,2-TETRACHLOROETHANE | 79-34-5 | ppbv | 7.3E+01 | 7.3E+01 | 7.3E+01 | 1.0E+00 | 1.0E+02 | 7.3E+01 | 7.3E+01 | 7.3E+01 | 7.3E+01 | 1.0E+00 | 6.1E+01 |
| 1,1,2-TRICHLOROETHANE | 79-00-5 | ppbv | 9.2E+01 | 9.2E+01 | 9.2E+01 | 5.5E-01 | 1.0E+02 | 9.2E+01 | 9.2E+01 | 9.2E+01 | 9.2E+01 | 5.5E-01 | 7.4E+01 |
| 1,1-DICHLOROETHANE | 75-34-3 | ppbv | 1.2E+02 | 1.2E+02 | 1.2E+02 | 4.9E-01 | 2.0E+02 | 1.2E+02 | 1.2E+02 | 1.2E+02 | 1.2E+02 | 4.9E-01 | 1.1E+02 |
| 1,1-DICHLOROETHENE | 75-35-4 | ppbv | 1.3E+02 | 9.8E+02 | 5.8E+02 | 5.0E-01 | 1.0E+02 | 1.3E+02 | 1.3E+02 | 2.4E+02 | 2.5E+02 | 5.0E-01 | 2.5E+02 |
| 1,1-Difluoroethane | 75-37-6 | ppbv | 3.7E+03 | 3.7E+03 | 3.7E+03 | | | 3.7E+03 | 3.7E+03 | 3.7E+03 | 3.7E+03 | | 3.7E+03 |
| 1,2,4-TRICHLOROBENZENE | 120-82-1 | ppbv | | | | 2.0E+00 | 1.0E+02 | | | | | 2.0E+00 | 3.5E+01 |
| 1,2,4-TRIMETHYLBENZENE | 95-63-6 | ppbv | | | | 1.4E+00 | 1.0E+02 | | | | | 1.4E+00 | 3.5E+01 |
| 1,2-Dibromoethane (EDB) | 106-93-4 | ppbv | | | | 5.2E-01 | 1.0E+02 | | | | | 5.2E-01 | 3.4E+01 |
| 1,2-DICHLOROBENZENE | 95-50-1 | ppbv | | | | 5.0E-01 | 1.0E+02 | | | | | 5.0E-01 | 3.4E+01 |
| 1,2-DICHLOROETHANE | 107-06-2 | ppbv | 2.5E+01 | 2.5E+01 | 2.5E+01 | 4.9E-01 | 1.0E+02 | 2.5E+01 | 2.5E+01 | 2.5E+01 | 2.5E+01 | 4.9E-01 | 2.8E+01 |
| 1,2-DICHLOROPROPANE | 78-87-5 | ppbv | | | | 4.3E-01 | 2.0E+02 | | | | | 4.3E-01 | 6.8E+01 |
| 1,2-Dichlorotetrafluoroethane | 76-14-2 | ppbv | | | | 2.0E+00 | 2.0E+02 | | | | | 2.0E+00 | 6.8E+01 |
| 1,3,5-TRIMETHYLBENZENE | 108-67-8 | ppbv | | | | 6.1E-01 | 1.0E+02 | | | | | 6.1E-01 | 3.4E+01 |
| 1,3-DICHLOROBENZENE | 541-73-1 | ppbv | | | | 5.0E-01 | 1.0E+02 | | | | | 5.0E-01 | 3.4E+01 |
| 1,4-DICHLOROBENZENE | 106-46-7 | ppbv | | | | 5.0E-01 | 1.0E+02 | | | | | 5.0E-01 | 3.4E+01 |
| 1,4-DIOXANE | 123-91-1 | ppbv | | | | 1.0E+01 | 2.0E+02 | | | | | 1.0E+01 | 7.4E+01 |
| 2-HEXANONE | 591-78-6 | ppbv | | | | 1.5E+00 | 1.0E+02 | | | | | 1.5E+00 | 3.4E+01 |
| 4-Bromofluorobenzene | 460-00-4 | ppbv | 2.9E+02 | 4.0E+02 | 4.0E+02 | | 9.1E+01 | 4.3E+02 | 4.3E+02 | 4.3E+02 | 4.6E+02 | | 3.7E+02 |
| 4-ETHYLTOLUENE | 622-96-8 | ppbv | | | | 6.1E-01 | 1.0E+02 | | | | | 6.1E-01 | 3.4E+01 |
| ACETONE | 67-64-1 | ppbv | | | | 5.0E+01 | 8.8E+02 | | | | | 1.6E+01 | 3.2E+02 |
| BENZENE | 71-43-2 | ppbv | 3.1E+01 | 3.1E+01 | 3.1E+01 | 6.3E-01 | 1.0E+02 | 3.1E+01 | 3.1E+01 | 3.1E+01 | 3.4E+01 | 6.3E-01 | 3.2E+01 |
| BENZYL CHLORIDE | 100-44-7 | ppbv | | | | 1.5E+00 | 1.9E+02 | | | | | 1.5E+00 | 6.5E+01 |
| BROMODICHLOROMETHANE | 75-27-4 | ppbv | | | | 4.5E-01 | 1.0E+02 | | | | | 4.5E-01 | 3.4E+01 |
| BROMOFORM | 75-25-2 | ppbv | | | | 4.8E-01 | 9.7E+01 | | | | | 4.8E-01 | 3.3E+01 |
| BROMOMETHANE | 74-83-9 | ppbv | | | | 5.2E-01 | 2.0E+02 | | | | | 5.2E-01 | 6.8E+01 |
| CARBON DISULFIDE | 75-15-0 | ppbv | | | | 1.9E+00 | 1.0E+02 | | | | | 1.9E+00 | 3.6E+01 |
| CARBON TETRACHLORIDE | 56-23-5 | ppbv | 1.6E+01 | 1.6E+01 | 1.6E+01 | 4.8E-01 | 4.1E+01 | 1.6E+01 | 1.6E+01 | 1.6E+01 | 1.6E+01 | 4.8E-01 | 1.5E+01 |
| CHLOROBENZENE | 108-90-7 | ppbv | | | | 4.3E-01 | 1.0E+02 | | | | | 4.3E-01 | 3.4E+01 |
| CHLOROETHANE | 75-00-3 | ppbv | 1.9E+02 | 1.9E+02 | 1.9E+02 | 3.8E-01 | 2.0E+02 | 1.9E+02 | 1.9E+02 | 1.9E+02 | 1.9E+02 | 3.8E-01 | 1.5E+02 |
| CHLOROFORM | 67-66-3 | ppbv | 2.0E+01 | 2.0E+01 | 2.0E+01 | 4.1E-01 | 1.0E+02 | 2.0E+01 | 2.0E+01 | 1.4E+02 | 1.4E+02 | 4.1E-01 | 4.9E+01 |
| CHLOROMETHANE | 74-87-3 | ppbv | | | | 4.8E-01 | 2.0E+02 | | | | | 4.8E-01 | 6.8E+01 |
| CIS-1,2-DICHLOROETHENE | 156-59-2 | ppbv | 1.3E+02 | 1.3E+02 | 1.3E+02 | 5.0E-01 | 2.0E+02 | 1.3E+02 | 1.3E+02 | 1.3E+02 | 1.3E+02 | 5.0E-01 | 1.1E+02 |
| CIS-1,3-DICHLOROPROPENE | 10061-01-5 | ppbv | | | | 4.4E-01 | 1.0E+02 | | | | | 4.4E-01 | 3.4E+01 |
| DIBROMOCHLOROMETHANE | 124-48-1 | ppbv | | | | 4.7E-01 | 1.0E+02 | | | | | 4.7E-01 | 3.4E+01 |
| ETHYLBENZENE | 100-41-4 | ppbv | 1.2E+02 | 1.2E+02 | 1.2E+02 | 4.6E-01 | 1.0E+02 | 1.2E+02 | 1.2E+02 | 1.2E+02 | 1.2E+02 | 4.6E-01 | 9.1E+01 |
| Freon 11 | 75-69-4 | ppbv | 8.9E+01 | 6.1E+02 | 3.7E+02 | 1.1E+00 | 1.0E+02 | 8.9E+01 | 8.9E+01 | 8.9E+01 | 8.9E+01 | 1.1E+00 | 1.5E+02 |
| Freon 113 | 76-13-1 | ppbv | 1.3E+02 | 2.5E+03 | 1.8E+03 | 1.4E+00 | 1.0E+02 | 6.5E+01 | 6.5E+01 | 6.5E+01 | 6.5E+01 | 1.4E+00 | 4.8E+02 |
| Freon 12 | 75-71-8 | ppbv | 1.0E+02 | 1.0E+02 | 1.0E+02 | 6.1E-01 | 1.0E+02 | 1.0E+02 | 1.0E+02 | 1.0E+02 | 1.0E+02 | 6.1E-01 | 8.1E+01 |
| HEXACHLOROBUTADIENE | 87-68-3 | ppbv | | | | 1.5E+00 | 1.0E+02 | | | | | 1.5E+00 | 3.5E+01 |
| HEXANE (N-HEXANE) | 110-54-3 | ppbv | | | | 2.0E+00 | 1.0E+02 | | | | | 2.0E+00 | 3.5E+01 |
| ISOPROPYL ALCOHOL (ISOPROPANOL) | 67-63-0 | ppbv | | | | 4.9E+00 | 2.0E+02 | | | | | 4.9E+00 | 7.1E+01 |
| m,p-Xylene | 1330-20-7 | ppbv | 1.2E+02 | 1.2E+02 | 1.2E+02 | 2.1E+00 | 2.0E+02 | 1.2E+02 | 1.2E+02 | 1.2E+02 | 1.2E+02 | 2.1E+00 | 1.0E+02 |
| Methyl ethyl ketone | 78-93-3 | ppbv | | | | 4.4E+00 | 2.0E+02 | | | | | 1.4E+00 | 7.0E+01 |
| METHYL ISOBUTYL KETONE | 108-10-1 | ppbv | | | | 1.5E+00 | 1.0E+02 | | | | | 1.5E+00 | 3.4E+01 |
| METHYL TERT-BUTYL ETHER | 1634-04-4 | ppbv | | | | 1.9E+00 | 1.0E+02 | | | | | 1.9E+00 | 3.5E+01 |
| METHYLENE CHLORIDE | 75-09-2 | ppbv | 1.4E+02 | 1.4E+02 | 1.4E+02 | 4.9E+00 | 1.0E+02 | 1.4E+02 | 1.4E+02 | 1.4E+02 | 1.4E+02 | 4.9E+00 | 1.1E+02 |
| O-XYLENE | 95-47-6 | ppbv | 1.2E+02 | 1.2E+02 | 1.2E+02 | 4.6E-01 | 1.0E+02 | 1.2E+02 | 1.2E+02 | 1.2E+02 | 1.2E+02 | 4.6E-01 | 9.1E+01 |
| STYRENE | 100-42-5 | ppbv | | | | 1.4E+00 | 1.0E+02 | | | | | 1.4E+00 | 3.5E+01 |
| Tetrachloroethene (PCE) | 127-18-4 | ppbv | 5.0E+03 | 3.2E+03 | 1.1E+03 | 2.4E+02 | 5.8E+03 | 7.2E+03 | 3.4E+03 | 1.3E+04 | 1.4E+04 | 4.1E+02 | 5.4E+03 |
| TOLUENE | 108-88-3 | ppbv | 2.7E+02 | 2.7E+02 | 2.7E+02 | 5.3E-01 | 1.0E+02 | 2.7E+02 | 2.7E+02 | 2.7E+02 | 2.7E+02 | 5.3E-01 | 2.0E+02 |
| TRANS-1,2-DICHLOROETHENE | 156-60-5 | ppbv | 1.3E+02 | 1.3E+02 | 1.3E+02 | 5.0E-01 | 2.0E+02 | 1.3E+02 | 1.3E+02 | 1.3E+02 | 1.3E+02 | 5.0E-01 | 1.1E+02 |
| TRANS-1,3-DICHLOROPROPENE | 10061-02-6 | ppbv | | | | 1.1E+00 | 1.0E+02 | | | | | 1.1E+00 | 3.5E+01 |
| Trichloroethene (TCE) | 79-01-6 | ppbv | 3.2E+01 | 1.3E+02 | 5.4E+01 | 1.3E+00 | 1.4E+02 | 1.2E+02 | 1.9E+01 | 6.5E+02 | 6.9E+02 | 1.7E+00 | 1.8E+02 |
| VINYL ACETATE | 108-05-4 | ppbv | | | | 2.0E+00 | 1.0E+02 | | | | | 2.0E+00 | 3.5E+01 |
| VINYL CHLORIDE | 75-01-4 | ppbv | 2.0E+01 | 2.0E+01 | 2.0E+01 | 3.9E-01 | 1.0E+02 | 2.0E+01 | 2.0E+01 | 2.0E+01 | 2.0E+01 | 3.9E-01 | 2.4E+01 |

**Omega Chemical Site**
**Full Scale On Site Soils Remedy**
**Preliminary Design Report**
**Influent Estimate Detail for Well:** VE-40S
**Basis for Estimated Concentrations:** VMP-28A

Performed by JTB Date 10/2/2012
Checked by IL Date 10/10/2012

See Notes on Summary Tab

| Average of NumericResult2 | | | SampleLocation | SampBegDepth | SampEndDepth | Date | | | |
|---|---|---|---|---|---|---|---|---|---|
| | | | VMP-28 | | | | | | Overall Average |
| | | | 6 | 12 | | | 24 | | |
| | | | (blank) | (blank) | | | (blank) | | |
| Parameter | CAS | Units2 | 2/28/2011 11:34 | 2/28/2011 8:52 | 2/28/2011 8:56 | 2/28/2011 9:01 | 2/28/2011 11:49 | 6/12/2012 16:13 | |
| 1,1,1,2-TETRACHLOROETHANE | 630-20-6 | ppbv | 7.3E+02 | 7.3E+01 | 7.3E+01 | 7.3E+01 | 7.3E+02 | | 3.4E+02 |
| 1,1,1-Trichloroethane (TCA) | 71-55-6 | ppbv | 9.2E+02 | 9.2E+01 | 9.2E+01 | 9.2E+01 | 9.2E+02 | 5.5E-01 | 3.5E+02 |
| 1,1,2,2-TETRACHLOROETHANE | 79-34-5 | ppbv | 7.3E+02 | 7.3E+01 | 7.3E+01 | 7.3E+01 | 7.3E+02 | 1.0E+00 | 2.8E+02 |
| 1,1,2-TRICHLOROETHANE | 79-00-5 | ppbv | 9.2E+02 | 9.2E+01 | 9.2E+01 | 9.2E+01 | 9.2E+02 | 5.5E-01 | 3.5E+02 |
| 1,1-DICHLOROETHANE | 75-34-3 | ppbv | 1.2E+03 | 1.2E+02 | 1.2E+02 | 1.2E+02 | 1.2E+03 | 4.9E-01 | 4.7E+02 |
| 1,1-DICHLOROETHENE | 75-35-4 | ppbv | 2.2E+03 | 7.1E+03 | 6.3E+03 | 6.0E+03 | 1.3E+05 | 5.0E-01 | 2.5E+04 |
| 1,1-Difluoroethane | 75-37-6 | ppbv | 3.7E+03 | 3.7E+03 | 3.7E+03 | 3.7E+03 | 3.7E+03 | | 3.7E+03 |
| 1,2,4-TRICHLOROBENZENE | 120-82-1 | ppbv | | | | | | 2.0E+00 | 2.0E+00 |
| 1,2,4-TRIMETHYLBENZENE | 95-63-6 | ppbv | | | | | | 1.4E+00 | 1.4E+00 |
| 1,2-Dibromoethane (EDB) | 106-93-4 | ppbv | | | | | | 5.2E-01 | 5.2E-01 |
| 1,2-DICHLOROBENZENE | 95-50-1 | ppbv | | | | | | 5.0E-01 | 5.0E-01 |
| 1,2-DICHLOROETHANE | 107-06-2 | ppbv | 2.5E+02 | 2.5E+01 | 2.5E+01 | 2.5E+01 | 2.5E+02 | 4.9E-01 | 9.5E+01 |
| 1,2-DICHLOROPROPANE | 78-87-5 | ppbv | | | | | | 4.3E-01 | 4.3E-01 |
| 1,2-Dichlorotetrafluoroethane | 76-14-2 | ppbv | | | | | | 2.0E+00 | 2.0E+00 |
| 1,3,5-TRIMETHYLBENZENE | 108-67-8 | ppbv | | | | | | 6.1E-01 | 6.1E-01 |
| 1,3-DICHLOROBENZENE | 541-73-1 | ppbv | | | | | | 5.0E-01 | 5.0E-01 |
| 1,4-DICHLOROBENZENE | 106-46-7 | ppbv | | | | | | 5.0E-01 | 5.0E-01 |
| 1,4-DIOXANE | 123-91-1 | ppbv | | | | | | 1.0E+01 | 1.0E+01 |
| 2-HEXANONE | 591-78-6 | ppbv | | | | | | 1.5E+00 | 1.5E+00 |
| 4-Bromofluorobenzene | 460-00-4 | ppbv | 4.0E+02 | 4.2E+02 | 4.3E+02 | 3.9E+02 | 4.2E+02 | | 4.1E+02 |
| 4-ETHYLTOLUENE | 622-96-8 | ppbv | | | | | | 6.1E-01 | 6.1E-01 |
| ACETONE | 67-64-1 | ppbv | | | | | | 6.7E+01 | 6.7E+01 |
| BENZENE | 71-43-2 | ppbv | 3.1E+02 | 3.1E+01 | 3.1E+01 | 3.1E+01 | 3.1E+02 | 1.6E+00 | 1.2E+02 |
| BENZYL CHLORIDE | 100-44-7 | ppbv | | | | | | 1.5E+00 | 1.5E+00 |
| BROMODICHLOROMETHANE | 75-27-4 | ppbv | | | | | | 4.5E-01 | 4.5E-01 |
| BROMOFORM | 75-25-2 | ppbv | | | | | | 4.8E-01 | 4.8E-01 |
| BROMOMETHANE | 74-83-9 | ppbv | | | | | | 5.2E-01 | 5.2E-01 |
| CARBON DISULFIDE | 75-15-0 | ppbv | | | | | | 1.9E+00 | 1.9E+00 |
| CARBON TETRACHLORIDE | 56-23-5 | ppbv | 1.6E+02 | 1.6E+01 | 1.6E+01 | 1.6E+01 | 1.6E+02 | 4.8E-01 | 6.1E+01 |
| CHLOROBENZENE | 108-90-7 | ppbv | | | | | | 4.3E-01 | 4.3E-01 |
| CHLOROETHANE | 75-00-3 | ppbv | 1.9E+03 | 1.9E+02 | 1.9E+02 | 1.9E+02 | 1.9E+03 | 3.8E-01 | 7.3E+02 |
| CHLOROFORM | 67-66-3 | ppbv | 2.0E+02 | 1.2E+02 | 1.1E+02 | 1.1E+02 | 1.5E+03 | 4.1E-01 | 3.3E+02 |
| CHLOROMETHANE | 74-87-3 | ppbv | | | | | | 9.7E-01 | 9.7E-01 |
| CIS-1,2-DICHLOROETHENE | 156-59-2 | ppbv | 1.3E+03 | 1.3E+02 | 1.3E+02 | 1.3E+02 | 1.3E+03 | 5.0E-01 | 4.8E+02 |
| CIS-1,3-DICHLOROPROPENE | 10061-01-5 | ppbv | | | | | | 4.4E-01 | 4.4E-01 |
| DIBROMOCHLOROMETHANE | 124-48-1 | ppbv | | | | | | 4.7E-01 | 4.7E-01 |
| ETHYLBENZENE | 100-41-4 | ppbv | 1.2E+03 | 1.2E+02 | 1.2E+02 | 1.2E+02 | 1.2E+03 | 9.2E-01 | 4.4E+02 |
| Freon 11 | 75-69-4 | ppbv | 8.9E+02 | 6.1E+02 | 3.6E+02 | 2.8E+02 | 2.7E+04 | 1.1E+00 | 4.8E+03 |
| Freon 113 | 76-13-1 | ppbv | 6.5E+02 | 1.3E+03 | 7.0E+02 | 5.3E+02 | 8.1E+04 | 5.6E+00 | 1.4E+04 |
| Freon 12 | 75-71-8 | ppbv | 1.0E+03 | 1.0E+02 | 1.0E+02 | 1.0E+02 | 1.0E+03 | 6.1E-01 | 3.9E+02 |
| HEXACHLOROBUTADIENE | 87-68-3 | ppbv | | | | | | 1.5E+00 | 1.5E+00 |
| HEXANE (N-HEXANE) | 110-54-3 | ppbv | | | | | | 2.0E+00 | 2.0E+00 |
| ISOPROPYL ALCOHOL (ISOPROPANOL) | 67-63-0 | ppbv | | | | | | 4.9E+00 | 4.9E+00 |
| m,p-Xylene | 1330-20-7 | ppbv | 1.2E+03 | 1.2E+02 | 1.2E+02 | 1.2E+02 | 1.2E+03 | 2.1E+00 | 4.4E+02 |
| Methyl ethyl ketone | 78-93-3 | ppbv | | | | | | 3.4E+00 | 3.4E+00 |
| METHYL ISOBUTYL KETONE | 108-10-1 | ppbv | | | | | | 1.5E+00 | 1.5E+00 |
| METHYL TERT-BUTYL ETHER | 1634-04-4 | ppbv | | | | | | 1.9E+00 | 1.9E+00 |
| METHYLENE CHLORIDE | 75-09-2 | ppbv | 1.4E+03 | 1.4E+02 | 1.4E+02 | 1.4E+02 | 1.4E+03 | 4.9E+00 | 5.5E+02 |
| O-XYLENE | 95-47-6 | ppbv | 1.2E+03 | 1.2E+02 | 1.2E+02 | 1.2E+02 | 1.2E+03 | 4.6E-01 | 4.4E+02 |
| STYRENE | 100-42-5 | ppbv | | | | | | 1.4E+00 | 1.4E+00 |
| Tetrachloroethene (PCE) | 127-18-4 | ppbv | 2.4E+04 | 3.8E+04 | 5.9E+04 | 5.9E+04 | 2.5E+05 | 3.4E+02 | 7.2E+04 |
| TOLUENE | 108-88-3 | ppbv | 2.7E+03 | 2.7E+02 | 2.7E+02 | 2.7E+02 | 2.7E+03 | 1.1E+00 | 1.0E+03 |
| TRANS-1,2-DICHLOROETHENE | 156-60-5 | ppbv | 1.3E+03 | 1.3E+02 | 1.3E+02 | 1.3E+02 | 1.3E+03 | 5.0E-01 | 4.8E+02 |
| TRANS-1,3-DICHLOROPROPENE | 10061-02-6 | ppbv | | | | | | 1.1E+00 | 1.1E+00 |
| Trichloroethene (TCE) | 79-01-6 | ppbv | 7.8E+02 | 1.2E+03 | 1.6E+03 | 1.7E+03 | 8.7E+03 | 2.6E+00 | 2.3E+03 |
| VINYL ACETATE | 108-05-4 | ppbv | | | | | | 2.0E+00 | 2.0E+00 |
| VINYL CHLORIDE | 75-01-4 | ppbv | 2.0E+02 | 2.0E+01 | 2.0E+01 | 2.0E+01 | 2.0E+02 | 3.9E-01 | 7.5E+01 |

**Omega Chemical Site**
**Full Scale On Site Soils Remedy**
**Preliminary Design Report**
**Influent Estimate Detail for Well:** **VE-2D**
**Basis for Estimated Concentrations:** **VE-2D**

Performed by JTB Date 10/2/2012
Checked by IL Date 10/10/2012

See Notes on Summary Tab

| Average of NumericResult2 | | | SampleLocation | SampBegDepth | SampEndDepth | Date |
|---|---|---|---|---|---|---|
| | | | VE-2D | Overall Average | | |
| | | | (blank) | | | |
| | | | (blank) | | | |
| **Parameter** | **CAS** | **Units2** | **8/3/2011 11:58** | | | |
| **1,1,1-Trichloroethane (TCA)** | **71-55-6** | ppbv | 3.5E+03 | 3.5E+03 | | |
| **1,1,2-TRICHLOROETHANE** | **79-00-5** | ppbv | 9.7E+02 | 9.7E+02 | | |
| **1,1-DICHLOROETHANE** | **75-34-3** | ppbv | 8.4E+02 | 8.4E+02 | | |
| **1,1-DICHLOROETHENE** | **75-35-4** | ppbv | 2.4E+04 | 2.4E+04 | | |
| **1,2-Dibromoethane (EDB)** | **106-93-4** | ppbv | 9.8E+02 | 9.8E+02 | | |
| **1,2-DICHLOROETHANE** | **107-06-2** | ppbv | 9.6E+02 | 9.6E+02 | | |
| **1,2-DICHLOROPROPANE** | **78-87-5** | ppbv | 9.7E+02 | 9.7E+02 | | |
| **1,2-Dichlorotetrafluoroethane** | **76-14-2** | ppbv | 9.7E+02 | 9.7E+02 | | |
| **1,4-DIOXANE** | **123-91-1** | ppbv | 4.7E+03 | 4.7E+03 | | |
| **2-HEXANONE** | **591-78-6** | ppbv | 9.8E+02 | 9.8E+02 | | |
| **ACETONE** | **67-64-1** | ppbv | 3.9E+03 | 3.9E+03 | | |
| **BENZENE** | **71-43-2** | ppbv | 3.4E+02 | 3.4E+02 | | |
| **BROMODICHLOROMETHANE** | **75-27-4** | ppbv | 9.7E+02 | 9.7E+02 | | |
| **BROMOMETHANE** | **74-83-9** | ppbv | 9.8E+02 | 9.8E+02 | | |
| **CARBON DISULFIDE** | **75-15-0** | ppbv | 4.8E+03 | 4.8E+03 | | |
| **CARBON TETRACHLORIDE** | **56-23-5** | ppbv | 9.7E+02 | 9.7E+02 | | |
| **CHLOROBENZENE** | **108-90-7** | ppbv | 9.8E+02 | 9.8E+02 | | |
| **CHLOROETHANE** | **75-00-3** | ppbv | 9.9E+02 | 9.9E+02 | | |
| **CHLOROFORM** | **67-66-3** | ppbv | 7.0E+02 | 7.0E+02 | | |
| **CHLOROMETHANE** | **74-87-3** | ppbv | 1.9E+03 | 1.9E+03 | | |
| **CIS-1,2-DICHLOROETHENE** | **156-59-2** | ppbv | 9.8E+02 | 9.8E+02 | | |
| **CIS-1,3-DICHLOROPROPENE** | **10061-01-5** | ppbv | 9.7E+02 | 9.7E+02 | | |
| **DIBROMOCHLOROMETHANE** | **124-48-1** | ppbv | 9.7E+02 | 9.7E+02 | | |
| **ETHYLBENZENE** | **100-41-4** | ppbv | 5.1E+02 | 5.1E+02 | | |
| **Freon 11** | **75-69-4** | ppbv | 2.7E+03 | 2.7E+03 | | |
| **Freon 113** | **76-13-1** | ppbv | 3.5E+04 | 3.5E+04 | | |
| **Freon 12** | **75-71-8** | ppbv | 9.7E+02 | 9.7E+02 | | |
| **HEXANE (N-HEXANE)** | **110-54-3** | ppbv | 4.8E+03 | 4.8E+03 | | |
| **ISOPROPYL ALCOHOL (ISOPROPANOL)** | **67-63-0** | ppbv | 4.9E+03 | 4.9E+03 | | |
| **m,p-Xylene** | **1330-20-7** | ppbv | 9.4E+02 | 9.4E+02 | | |
| **Methyl ethyl ketone** | **78-93-3** | ppbv | 9.8E+02 | 9.8E+02 | | |
| **METHYL ISOBUTYL KETONE** | **108-10-1** | ppbv | 9.8E+02 | 9.8E+02 | | |
| **METHYL TERT-BUTYL ETHER** | **1634-04-4** | ppbv | 9.7E+02 | 9.7E+02 | | |
| **METHYLENE CHLORIDE** | **75-09-2** | ppbv | 9.8E+02 | 9.8E+02 | | |
| **O-XYLENE** | **95-47-6** | ppbv | 3.9E+02 | 3.9E+02 | | |
| **Tetrachloroethene (PCE)** | **127-18-4** | ppbv | 2.2E+05 | 2.2E+05 | | |
| **TOLUENE** | **108-88-3** | ppbv | 2.9E+02 | 2.9E+02 | | |
| **TRANS-1,2-DICHLOROETHENE** | **156-60-5** | ppbv | 9.8E+02 | 9.8E+02 | | |
| **TRANS-1,3-DICHLOROPROPENE** | **10061-02-6** | ppbv | 9.7E+02 | 9.7E+02 | | |
| **Trichloroethene (TCE)** | **79-01-6** | ppbv | 3.5E+04 | 3.5E+04 | | |
| **VINYL ACETATE** | **108-05-4** | ppbv | 4.8E+03 | 4.8E+03 | | |
| **VINYL CHLORIDE** | **75-01-4** | ppbv | 9.8E+02 | 9.8E+02 | | |

**Omega Chemical Site**
**Full Scale On Site Soils Remedy**
**Preliminary Design Report**
**Influent Estimate Detail for Well:** DPE-3
**Basis for Estimated Concentrations:** VMP 43B

Performed by JTB Date 10/2/2012
Checked by IL Date 10/10/2012

See Notes on Summary Tab

| Average of NumericResult2 | | | SampleLocation | SampBegDepth | SampEndDepth | Date |
|---|---|---|---|---|---|---|
| | | | VMP-43 | Overall Average | | |
| | | | 55 | | | |
| | | | (blank) | | | |
| Parameter | CAS | Units2 | 3/18/2011 9:35 | | | |
| 1,1,1,2-TETRACHLOROETHANE | 630-20-6 | ppbv | 1.5E+03 | 1.5E+03 | | |
| 1,1,1-Trichloroethane (TCA) | 71-55-6 | ppbv | 1.8E+03 | 1.8E+03 | | |
| 1,1,2,2-TETRACHLOROETHANE | 79-34-5 | ppbv | 1.5E+03 | 1.5E+03 | | |
| 1,1,2-TRICHLOROETHANE | 79-00-5 | ppbv | 1.8E+03 | 1.8E+03 | | |
| 1,1-DICHLOROETHANE | 75-34-3 | ppbv | 2.5E+03 | 2.5E+03 | | |
| 1,1-DICHLOROETHENE | 75-35-4 | ppbv | 1.6E+04 | 1.6E+04 | | |
| 1,1-Difluoroethane | 75-37-6 | ppbv | 3.7E+03 | 3.7E+03 | | |
| 1,2-DICHLOROETHANE | 107-06-2 | ppbv | 4.9E+02 | 4.9E+02 | | |
| 4-Bromofluorobenzene | 460-00-4 | ppbv | 3.8E+02 | 3.8E+02 | | |
| BENZENE | 71-43-2 | ppbv | 6.3E+02 | 6.3E+02 | | |
| CARBON TETRACHLORIDE | 56-23-5 | ppbv | 3.2E+02 | 3.2E+02 | | |
| CHLOROETHANE | 75-00-3 | ppbv | 3.8E+03 | 3.8E+03 | | |
| CHLOROFORM | 67-66-3 | ppbv | 4.1E+02 | 4.1E+02 | | |
| CIS-1,2-DICHLOROETHENE | 156-59-2 | ppbv | 2.5E+03 | 2.5E+03 | | |
| ETHYLBENZENE | 100-41-4 | ppbv | 2.3E+03 | 2.3E+03 | | |
| Freon 11 | 75-69-4 | ppbv | 2.3E+03 | 2.3E+03 | | |
| Freon 113 | 76-13-1 | ppbv | 7.7E+03 | 7.7E+03 | | |
| Freon 12 | 75-71-8 | ppbv | 2.0E+03 | 2.0E+03 | | |
| m,p-Xylene | 1330-20-7 | ppbv | 2.3E+03 | 2.3E+03 | | |
| METHYLENE CHLORIDE | 75-09-2 | ppbv | 2.9E+03 | 2.9E+03 | | |
| O-XYLENE | 95-47-6 | ppbv | 2.3E+03 | 2.3E+03 | | |
| Tetrachloroethene (PCE) | 127-18-4 | ppbv | 3.4E+04 | 3.4E+04 | | |
| TOLUENE | 108-88-3 | ppbv | 5.3E+03 | 5.3E+03 | | |
| TRANS-1,2-DICHLOROETHENE | 156-60-5 | ppbv | 2.5E+03 | 2.5E+03 | | |
| Trichloroethene (TCE) | 79-01-6 | ppbv | 4.5E+03 | 4.5E+03 | | |
| VINYL CHLORIDE | 75-01-4 | ppbv | 3.9E+02 | 3.9E+02 | | |

**Omega Chemical Site**
**Full Scale On Site Soils Remedy**
**Preliminary Design Report**
**Influent Estimate Detail for Well:** DPE-4
**Basis for Estimated Concentrations:** VMPs 43B, 32B, and 32C

Performed by JTB Date 10/2/2012
Checked by IL Date 10/10/2012

See Notes on Summary Tab

| Average of NumericResult2 | | | SampleLocation | SampBegDepth | SampEndDepth | Date | | | | |
|---|---|---|---|---|---|---|---|---|---|---|
| | | | VMP-32 | | | | | | VMP-43 | Overall Average |
| | | | 40 | 55 | 60 | | | 70 | 55 | |
| | | | (blank) | (blank) | 60 | (blank) | | (blank) | (blank) | |
| Parameter | CAS | Units2 | 3/9/2011 13:38 | 3/3/2011 9:14 | 3/9/2011 14:06 | 3/9/2011 14:06 | 3/9/2011 14:07 | 3/9/2011 14:35 | 3/18/2011 9:35 | |
| 1,1,1,2-TETRACHLOROETHANE | 630-20-6 | ppbv | 1.5E+03 | 7.3E+02 | | 5.4E+01 | 2.9E+03 | 7.3E+02 | 1.5E+03 | 1.2E+03 |
| 1,1,1-Trichloroethane (TCA) | 71-55-6 | ppbv | 1.8E+03 | 9.2E+02 | 5.5E+01 | | 3.7E+03 | 9.2E+02 | 1.8E+03 | 1.5E+03 |
| 1,1,2,2-TETRACHLOROETHANE | 79-34-5 | ppbv | 1.5E+03 | 7.3E+02 | | 1.1E+02 | 2.9E+03 | 7.3E+02 | 1.5E+03 | 1.2E+03 |
| 1,1,2-TRICHLOROETHANE | 79-00-5 | ppbv | 1.8E+03 | 9.2E+02 | 5.5E+01 | | 3.7E+03 | 9.2E+02 | 1.8E+03 | 1.5E+03 |
| 1,1-DICHLOROETHANE | 75-34-3 | ppbv | 2.5E+03 | 1.2E+03 | 5.4E+01 | | 4.9E+03 | 1.2E+03 | 2.5E+03 | 2.1E+03 |
| 1,1-DICHLOROETHENE | 75-35-4 | ppbv | 2.4E+05 | 1.1E+05 | 1.1E+03 | | 1.1E+04 | 4.5E+03 | 1.6E+04 | 6.4E+04 |
| 1,1-Difluoroethane | 75-37-6 | ppbv | 3.7E+03 | 3.7E+03 | | | 7.4E+03 | 3.7E+03 | 3.7E+03 | 4.4E+03 |
| 1,2,4-TRICHLOROBENZENE | 120-82-1 | ppbv | | | 1.1E+02 | | | | | 1.1E+02 |
| 1,2,4-TRIMETHYLBENZENE | 95-63-6 | ppbv | | | 1.1E+02 | | | | | 1.1E+02 |
| 1,2-Dibromoethane (EDB) | 106-93-4 | ppbv | | | 5.5E+01 | | | | | 5.5E+01 |
| 1,2-DICHLOROBENZENE | 95-50-1 | ppbv | | | 5.5E+01 | | | | | 5.5E+01 |
| 1,2-DICHLOROETHANE | 107-06-2 | ppbv | 4.9E+02 | 2.5E+02 | 5.4E+01 | | 9.9E+02 | 2.5E+02 | 4.9E+02 | 4.2E+02 |
| 1,2-DICHLOROPROPANE | 78-87-5 | ppbv | | | 5.4E+01 | | | | | 5.4E+01 |
| 1,2-Dichlorotetrafluoroethane | 76-14-2 | ppbv | | | 5.4E+01 | | | | | 5.4E+01 |
| 1,3,5-TRIMETHYLBENZENE | 108-67-8 | ppbv | | | 1.1E+02 | | | | | 1.1E+02 |
| 1,3-DICHLOROBENZENE | 541-73-1 | ppbv | | | 5.5E+01 | | | | | 5.5E+01 |
| 1,4-DICHLOROBENZENE | 106-46-7 | ppbv | | | 5.5E+01 | | | | | 5.5E+01 |
| 1,4-DIOXANE | 123-91-1 | ppbv | | | 2.7E+02 | | | | | 2.7E+02 |
| 2-HEXANONE | 591-78-6 | ppbv | | | 5.4E+01 | | | | | 5.4E+01 |
| 4-Bromofluorobenzene | 460-00-4 | ppbv | 4.3E+02 | 4.3E+02 | | | 4.1E+02 | 4.1E+02 | 3.8E+02 | 4.1E+02 |
| 4-ETHYLTOLUENE | 622-96-8 | ppbv | | | 5.5E+01 | | | | | 5.5E+01 |
| ACETONE | 67-64-1 | ppbv | | | 1.6E+02 | | | | | 1.6E+02 |
| BENZENE | 71-43-2 | ppbv | 6.3E+02 | 3.1E+02 | 5.3E+01 | | 1.3E+03 | 3.1E+02 | 6.3E+02 | 5.3E+02 |
| BENZYL CHLORIDE | 100-44-7 | ppbv | | | 5.4E+01 | | | | | 5.4E+01 |
| BROMODICHLOROMETHANE | 75-27-4 | ppbv | | | 5.4E+01 | | | | | 5.4E+01 |
| BROMOFORM | 75-25-2 | ppbv | | | 5.4E+01 | | | | | 5.4E+01 |
| BROMOMETHANE | 74-83-9 | ppbv | | | 5.4E+01 | | | | | 5.4E+01 |
| CARBON DISULFIDE | 75-15-0 | ppbv | | | 7.4E+01 | | | | | 7.4E+01 |
| CARBON TETRACHLORIDE | 56-23-5 | ppbv | 3.2E+02 | 1.6E+02 | 5.4E+01 | | 6.4E+02 | 1.6E+02 | 3.2E+02 | 2.7E+02 |
| CHLOROBENZENE | 108-90-7 | ppbv | | | 5.4E+01 | | | | | 5.4E+01 |
| CHLOROETHANE | 75-00-3 | ppbv | 3.8E+03 | 1.9E+03 | 5.3E+01 | | 7.6E+03 | 1.9E+03 | 3.8E+03 | 3.2E+03 |
| CHLOROFORM | 67-66-3 | ppbv | 5.9E+03 | 4.1E+03 | 1.9E+02 | | 8.2E+02 | 5.5E+02 | 4.1E+02 | 2.0E+03 |
| CHLOROMETHANE | 74-87-3 | ppbv | | | 1.1E+02 | | | | | 1.1E+02 |
| CIS-1,2-DICHLOROETHENE | 156-59-2 | ppbv | 2.5E+03 | 1.3E+03 | 5.3E+01 | | 5.0E+03 | 1.3E+03 | 2.5E+03 | 2.1E+03 |
| CIS-1,3-DICHLOROPROPENE | 10061-01-5 | ppbv | | | 5.5E+01 | | | | | 5.5E+01 |
| DIBROMOCHLOROMETHANE | 124-48-1 | ppbv | | | 5.4E+01 | | | | | 5.4E+01 |
| ETHYLBENZENE | 100-41-4 | ppbv | 2.3E+03 | 1.2E+03 | 5.5E+01 | | 4.6E+03 | 1.2E+03 | 2.3E+03 | 1.9E+03 |
| Freon 11 | 75-69-4 | ppbv | 4.3E+04 | 1.7E+04 | 1.6E+02 | | 3.6E+03 | 2.8E+03 | 2.3E+03 | 1.1E+04 |
| Freon 113 | 76-13-1 | ppbv | 2.1E+05 | 6.8E+04 | 5.1E+02 | | 1.1E+04 | 1.3E+04 | 7.7E+03 | 5.1E+04 |
| Freon 12 | 75-71-8 | ppbv | 2.0E+03 | 1.0E+03 | 5.5E+01 | | 4.0E+03 | 1.0E+03 | 2.0E+03 | 1.7E+03 |
| HEXACHLOROBUTADIENE | 87-68-3 | ppbv | | | 5.4E+01 | | | | | 5.4E+01 |
| HEXANE (N-HEXANE) | 110-54-3 | ppbv | | | 2.7E+02 | | | | | 2.7E+02 |
| ISOPROPYL ALCOHOL (ISOPROPANOL) | 67-63-0 | ppbv | | | 2.7E+02 | | | | | 2.7E+02 |
| m,p-Xylene | 1330-20-7 | ppbv | 2.3E+03 | 1.2E+03 | 1.9E+01 | | 4.6E+03 | 1.2E+03 | 2.3E+03 | 1.9E+03 |
| Methyl ethyl ketone | 78-93-3 | ppbv | | | 5.4E+01 | | | | | 5.4E+01 |
| METHYL ISOBUTYL KETONE | 108-10-1 | ppbv | | | 5.4E+01 | | | | | 5.4E+01 |
| METHYL TERT-BUTYL ETHER | 1634-04-4 | ppbv | | | 5.5E+01 | | | | | 5.5E+01 |
| METHYLENE CHLORIDE | 75-09-2 | ppbv | 2.9E+03 | 1.4E+03 | 5.5E+01 | | 5.8E+03 | 1.4E+03 | 2.9E+03 | 2.4E+03 |
| O-XYLENE | 95-47-6 | ppbv | 2.3E+03 | 1.2E+03 | 5.5E+00 | | 4.6E+03 | 1.2E+03 | 2.3E+03 | 1.9E+03 |
| STYRENE | 100-42-5 | ppbv | | | 1.7E+01 | | | | | 1.7E+01 |
| Tetrachloroethene (PCE) | 127-18-4 | ppbv | 7.1E+05 | 2.8E+05 | 1.2E+04 | | 4.6E+04 | 2.5E+04 | 3.4E+04 | 1.8E+05 |
| TOLUENE | 108-88-3 | ppbv | 5.3E+03 | 2.7E+03 | 2.9E+01 | | 1.1E+04 | 2.7E+03 | 5.3E+03 | 4.4E+03 |
| TRANS-1,2-DICHLOROETHENE | 156-60-5 | ppbv | 2.5E+03 | 1.3E+03 | 5.3E+01 | | 5.0E+03 | 1.3E+03 | 2.5E+03 | 2.1E+03 |
| TRANS-1,3-DICHLOROPROPENE | 10061-02-6 | ppbv | | | 5.5E+01 | | | | | 5.5E+01 |
| Trichloroethene (TCE) | 79-01-6 | ppbv | 3.9E+04 | 2.6E+04 | 6.3E+02 | | 2.0E+03 | 1.5E+03 | 4.5E+03 | 1.2E+04 |
| VINYL ACETATE | 108-05-4 | ppbv | | | 2.7E+02 | | | | | 2.7E+02 |
| VINYL CHLORIDE | 75-01-4 | ppbv | 3.9E+02 | 2.0E+02 | 5.5E+01 | | 7.8E+02 | 2.0E+02 | 3.9E+02 | 3.4E+02 |

**Omega Chemical Site**
**Full Scale On Site Soils Remedy**
**Preliminary Design Report**
**Influent Estimate Detail for Well:** DPE-5
**Basis for Estimated Concentrations:** VMPs 31B and 31C

Performed by JTB Date 10/2/2012
Checked by IL Date 10/10/2012

See Notes on Summary Tab

| Average of NumericResult2 | | | SampleLocation | SampBegDepth | SampEndDepth | Date | |
|---|---|---|---|---|---|---|---|
| | | | VMP-31 | | | | Overall Average |
| | | | 40 | 55 | 60 | 70 | |
| | | | (blank) | (blank) | (blank) | (blank) | |
| Parameter | CAS | Units2 | 3/9/2011 14:56 | 3/3/2011 11:05 | 3/9/2011 15:15 | 3/9/2011 15:23 | |
| 1,1,1,2-TETRACHLOROETHANE | 630-20-6 | ppbv | 1.5E+02 | 2.9E+03 | 1.5E+02 | 1.5E+03 | 1.2E+03 |
| 1,1,1-Trichloroethane (TCA) | 71-55-6 | ppbv | 1.8E+02 | 3.7E+03 | 1.8E+02 | 1.8E+03 | 1.5E+03 |
| 1,1,2,2-TETRACHLOROETHANE | 79-34-5 | ppbv | 1.5E+02 | 2.9E+03 | 1.5E+02 | 1.5E+03 | 1.2E+03 |
| 1,1,2-TRICHLOROETHANE | 79-00-5 | ppbv | 1.8E+02 | 3.7E+03 | 1.8E+02 | 1.8E+03 | 1.5E+03 |
| 1,1-DICHLOROETHANE | 75-34-3 | ppbv | 2.5E+02 | 4.9E+03 | 2.5E+02 | 2.5E+03 | 2.0E+03 |
| 1,1-DICHLOROETHENE | 75-35-4 | ppbv | 2.5E+02 | 5.0E+04 | 3.5E+02 | 5.3E+04 | 2.6E+04 |
| 1,1-Difluoroethane | 75-37-6 | ppbv | 3.7E+03 | 7.4E+03 | 3.7E+03 | 3.7E+03 | 4.6E+03 |
| 1,2-DICHLOROETHANE | 107-06-2 | ppbv | 4.9E+01 | 9.9E+02 | 4.9E+01 | 4.9E+02 | 4.0E+02 |
| 4-Bromofluorobenzene | 460-00-4 | ppbv | 4.4E+02 | 4.2E+02 | 4.2E+02 | 4.2E+02 | 4.2E+02 |
| BENZENE | 71-43-2 | ppbv | 6.3E+01 | 1.3E+03 | 6.3E+01 | 6.3E+02 | 5.0E+02 |
| CARBON TETRACHLORIDE | 56-23-5 | ppbv | 3.2E+01 | 6.4E+02 | 3.2E+01 | 3.2E+02 | 2.5E+02 |
| CHLOROETHANE | 75-00-3 | ppbv | 3.8E+02 | 7.6E+03 | 3.8E+02 | 3.8E+03 | 3.0E+03 |
| CHLOROFORM | 67-66-3 | ppbv | 4.1E+01 | 3.7E+03 | 4.9E+01 | 5.9E+03 | 2.4E+03 |
| CIS-1,2-DICHLOROETHENE | 156-59-2 | ppbv | 2.5E+02 | 5.0E+03 | 2.5E+02 | 2.5E+03 | 2.0E+03 |
| ETHYLBENZENE | 100-41-4 | ppbv | 2.3E+02 | 4.6E+03 | 2.3E+02 | 2.3E+03 | 1.8E+03 |
| Freon 11 | 75-69-4 | ppbv | 1.8E+02 | 8.4E+03 | 1.8E+02 | 5.2E+03 | 3.5E+03 |
| Freon 113 | 76-13-1 | ppbv | 1.3E+02 | 3.1E+04 | 1.3E+02 | 2.0E+04 | 1.3E+04 |
| Freon 12 | 75-71-8 | ppbv | 2.0E+02 | 4.0E+03 | 2.0E+02 | 2.0E+03 | 1.6E+03 |
| m,p-Xylene | 1330-20-7 | ppbv | 2.3E+02 | 4.6E+03 | 2.3E+02 | 2.3E+03 | 1.8E+03 |
| METHYLENE CHLORIDE | 75-09-2 | ppbv | 2.9E+02 | 5.8E+03 | 2.9E+02 | 2.9E+03 | 2.3E+03 |
| O-XYLENE | 95-47-6 | ppbv | 2.3E+02 | 4.6E+03 | 2.3E+02 | 2.3E+03 | 1.8E+03 |
| Tetrachloroethene (PCE) | 127-18-4 | ppbv | 6.0E+03 | 2.1E+05 | 7.7E+03 | 1.8E+05 | 9.9E+04 |
| TOLUENE | 108-88-3 | ppbv | 5.3E+02 | 1.1E+04 | 5.3E+02 | 5.3E+03 | 4.2E+03 |
| TRANS-1,2-DICHLOROETHENE | 156-60-5 | ppbv | 2.5E+02 | 5.0E+03 | 2.5E+02 | 2.5E+03 | 2.0E+03 |
| Trichloroethene (TCE) | 79-01-6 | ppbv | 3.7E+01 | 1.0E+04 | 2.6E+02 | 1.2E+04 | 5.8E+03 |
| VINYL CHLORIDE | 75-01-4 | ppbv | 3.9E+01 | 7.8E+02 | 3.9E+01 | 3.9E+02 | 3.1E+02 |

**Omega Chemical Site**
**Full Scale On Site Soils Remedy**
**Preliminary Design Report**
**Influent Estimate Detail for Well:** **VE-6D**
**Basis for Estimated Concentrations:** **VMPs 31B, 31C, and 28B**

Performed by JTB Date 10/2/2012
Checked by IL Date 10/10/2012

See Notes on Summary Tab

| Average of NumericResult2 | | | SampleLocation | SampBegDepth | SampEndDepth | Date | | | |
|---|---|---|---|---|---|---|---|---|---|
| | | | VMP-28 | | VMP-31 | | | | Overall Average |
| | | | 40 | | 40 | 55 | 60 | 70 | |
| | | | (blank) | | (blank) | (blank) | (blank) | (blank) | |
| **Parameter** | **CAS** | **Units2** | **3/9/2011 12:21** | **3/9/2011 12:22** | **3/9/2011 14:56** | **3/3/2011 11:05** | **3/9/2011 15:15** | **3/9/2011 15:23** | |
| **1,1,1,2-TETRACHLOROETHANE** | **630-20-6** | ppbv | 7.3E+01 | 7.3E+01 | 1.5E+02 | 2.9E+03 | 1.5E+02 | 1.5E+03 | 8.0E+02 |
| **1,1,1-Trichloroethane (TCA)** | **71-55-6** | ppbv | 9.2E+01 | 9.2E+01 | 1.8E+02 | 3.7E+03 | 1.8E+02 | 1.8E+03 | 1.0E+03 |
| **1,1,2,2-TETRACHLOROETHANE** | **79-34-5** | ppbv | 7.3E+01 | 7.3E+01 | 1.5E+02 | 2.9E+03 | 1.5E+02 | 1.5E+03 | 8.0E+02 |
| **1,1,2-TRICHLOROETHANE** | **79-00-5** | ppbv | 9.2E+01 | 9.2E+01 | 1.8E+02 | 3.7E+03 | 1.8E+02 | 1.8E+03 | 1.0E+03 |
| **1,1-DICHLOROETHANE** | **75-34-3** | ppbv | 1.2E+02 | 1.2E+02 | 2.5E+02 | 4.9E+03 | 2.5E+02 | 2.5E+03 | 1.4E+03 |
| **1,1-DICHLOROETHENE** | **75-35-4** | ppbv | 1.3E+04 | 1.1E+04 | 2.5E+02 | 5.0E+04 | 3.5E+02 | 5.3E+04 | 2.1E+04 |
| **1,1-Difluoroethane** | **75-37-6** | ppbv | 3.7E+03 | 3.7E+03 | 3.7E+03 | 7.4E+03 | 3.7E+03 | 3.7E+03 | 4.3E+03 |
| **1,2-DICHLOROETHANE** | **107-06-2** | ppbv | 2.5E+01 | 2.5E+01 | 4.9E+01 | 9.9E+02 | 4.9E+01 | 4.9E+02 | 2.7E+02 |
| **4-Bromofluorobenzene** | **460-00-4** | ppbv | 4.3E+02 | 4.6E+02 | 4.4E+02 | 4.2E+02 | 4.2E+02 | 4.2E+02 | 4.3E+02 |
| **BENZENE** | **71-43-2** | ppbv | 4.7E+01 | 5.0E+01 | 6.3E+01 | 1.3E+03 | 6.3E+01 | 6.3E+02 | 3.5E+02 |
| **CARBON TETRACHLORIDE** | **56-23-5** | ppbv | 1.6E+01 | 1.6E+01 | 3.2E+01 | 6.4E+02 | 3.2E+01 | 3.2E+02 | 1.7E+02 |
| **CHLOROETHANE** | **75-00-3** | ppbv | 1.9E+02 | 1.9E+02 | 3.8E+02 | 7.6E+03 | 3.8E+02 | 3.8E+03 | 2.1E+03 |
| **CHLOROFORM** | **67-66-3** | ppbv | 1.9E+02 | 2.0E+02 | 4.1E+01 | 3.7E+03 | 4.9E+01 | 5.9E+03 | 1.7E+03 |
| **CIS-1,2-DICHLOROETHENE** | **156-59-2** | ppbv | 1.3E+02 | 1.3E+02 | 2.5E+02 | 5.0E+03 | 2.5E+02 | 2.5E+03 | 1.4E+03 |
| **ETHYLBENZENE** | **100-41-4** | ppbv | 1.2E+02 | 1.2E+02 | 2.3E+02 | 4.6E+03 | 2.3E+02 | 2.3E+03 | 1.3E+03 |
| **Freon 11** | **75-69-4** | ppbv | 3.0E+02 | 2.7E+02 | 1.8E+02 | 8.4E+03 | 1.8E+02 | 5.2E+03 | 2.4E+03 |
| **Freon 113** | **76-13-1** | ppbv | 2.3E+02 | 2.0E+02 | 1.3E+02 | 3.1E+04 | 1.3E+02 | 2.0E+04 | 8.6E+03 |
| **Freon 12** | **75-71-8** | ppbv | 1.0E+02 | 1.0E+02 | 2.0E+02 | 4.0E+03 | 2.0E+02 | 2.0E+03 | 1.1E+03 |
| **m,p-Xylene** | **1330-20-7** | ppbv | 1.2E+02 | 1.2E+02 | 2.3E+02 | 4.6E+03 | 2.3E+02 | 2.3E+03 | 1.3E+03 |
| **METHYLENE CHLORIDE** | **75-09-2** | ppbv | 1.4E+02 | 1.4E+02 | 2.9E+02 | 5.8E+03 | 2.9E+02 | 2.9E+03 | 1.6E+03 |
| **O-XYLENE** | **95-47-6** | ppbv | 1.2E+02 | 1.2E+02 | 2.3E+02 | 4.6E+03 | 2.3E+02 | 2.3E+03 | 1.3E+03 |
| **Tetrachloroethene (PCE)** | **127-18-4** | ppbv | 1.4E+04 | 1.6E+04 | 6.0E+03 | 2.1E+05 | 7.7E+03 | 1.8E+05 | 7.1E+04 |
| **TOLUENE** | **108-88-3** | ppbv | 2.7E+02 | 2.7E+02 | 5.3E+02 | 1.1E+04 | 5.3E+02 | 5.3E+03 | 2.9E+03 |
| **TRANS-1,2-DICHLOROETHENE** | **156-60-5** | ppbv | 1.3E+02 | 1.3E+02 | 2.5E+02 | 5.0E+03 | 2.5E+02 | 2.5E+03 | 1.4E+03 |
| **Trichloroethene (TCE)** | **79-01-6** | ppbv | 1.2E+03 | 1.2E+03 | 3.7E+01 | 1.0E+04 | 2.6E+02 | 1.2E+04 | 4.3E+03 |
| **VINYL CHLORIDE** | **75-01-4** | ppbv | 2.0E+01 | 2.0E+01 | 3.9E+01 | 7.8E+02 | 3.9E+01 | 3.9E+02 | 2.2E+02 |

**Omega Chemical Site**
**Full Scale On Site Soils Remedy** Performed by JTB Date 10/2/2012
**Preliminary Design Report** Checked by IL Date 10/10/2012
**Influent Estimate Detail for Well:** VE-7D
**Basis for Estimated Concentrations:** VMPs 38B, 38C, 44B, 44C, 45B, 45C

See Notes on Summary Tab

| Average of NumericResult2 | | | SampleLocation | SampBegDepth | SampEndDepth | Date | | | | | | | | | | |
|---|---|---|---|---|---|---|---|---|---|---|---|---|---|---|---|---|
| | | | VMP-38 | | | | VMP-44 | | | | VMP-45 | | | | | Overall Average |
| | | | 40 | 55 | 60 | 70 | 40 | 55 | 60 | 70 | 40 | | 55 | 60 | 70 | |
| | | | (blank) | (blank) | (blank) | (blank) | (blank) | (blank) | (blank) | (blank) | (blank) | | (blank) | (blank) | (blank) | |
| **Parameter** | **CAS** | **Units2** | **3/10/2011 11:32** | **3/4/2011 15:05** | **3/10/2011 11:40** | **3/10/2011 11:49** | **3/18/2011 8:21** | **3/18/2011 10:10** | **3/18/2011 8:28** | **3/18/2011 8:37** | **3/18/2011 14:12** | **3/18/2011 14:13** | **3/18/2011 10:54** | **3/18/2011 14:24** | **3/18/2011 14:53** | |
| **1,1,1,2-TETRACHLOROETHANE** | **630-20-6** | ppbv | 1.5E+03 | 2.9E+03 | 1.5E+03 | 1.5E+03 | 7.3E+02 | 1.5E+02 | 7.3E+02 | 7.3E+02 | 7.3E+02 | 7.3E+02 | 7.3E+02 | 7.3E+02 | 7.3E+02 | 1.0E+03 |
| **1,1,1-Trichloroethane (TCA)** | **71-55-6** | ppbv | 1.8E+03 | 3.7E+03 | 1.8E+03 | 1.8E+03 | 9.2E+02 | 1.8E+02 | 9.2E+02 | 9.2E+02 | 9.2E+02 | 9.2E+02 | 9.2E+02 | 9.2E+02 | 9.2E+02 | 1.3E+03 |
| **1,1,2,2-TETRACHLOROETHANE** | **79-34-5** | ppbv | 1.5E+03 | 2.9E+03 | 1.5E+03 | 1.5E+03 | 7.3E+02 | 1.5E+02 | 7.3E+02 | 7.3E+02 | 7.3E+02 | 7.3E+02 | 7.3E+02 | 7.3E+02 | 7.3E+02 | 1.0E+03 |
| **1,1,2-TRICHLOROETHANE** | **79-00-5** | ppbv | 1.8E+03 | 3.7E+03 | 1.8E+03 | 1.8E+03 | 9.2E+02 | 1.8E+02 | 9.2E+02 | 9.2E+02 | 9.2E+02 | 9.2E+02 | 9.2E+02 | 9.2E+02 | 9.2E+02 | 1.3E+03 |
| **1,1-DICHLOROETHANE** | **75-34-3** | ppbv | 2.5E+03 | 4.9E+03 | 2.5E+03 | 2.5E+03 | 1.2E+03 | 2.5E+02 | 1.2E+03 | 1.2E+03 | 1.2E+03 | 1.2E+03 | 1.2E+03 | 1.2E+03 | 1.2E+03 | 1.7E+03 |
| **1,1-DICHLOROETHENE** | **75-35-4** | ppbv | 5.0E+04 | 3.8E+05 | 3.8E+05 | 4.5E+05 | 3.3E+04 | 2.0E+03 | 6.0E+05 | 8.3E+05 | 4.8E+04 | 5.0E+04 | 3.5E+05 | 9.1E+04 | 1.3E+05 | 2.6E+05 |
| **1,1-Difluoroethane** | **75-37-6** | ppbv | 3.7E+03 | 7.4E+03 | 3.7E+03 | 3.7E+03 | 3.7E+03 | 3.7E+03 | 3.7E+03 | 3.7E+03 | 3.7E+03 | 3.7E+03 | 3.7E+03 | 3.7E+03 | 3.7E+03 | 4.0E+03 |
| **1,2-DICHLOROETHANE** | **107-06-2** | ppbv | 4.9E+02 | 9.9E+02 | 4.9E+02 | 4.9E+02 | 2.5E+02 | 4.9E+01 | 2.5E+02 | 2.5E+02 | 2.5E+02 | 2.5E+02 | 2.5E+02 | 2.5E+02 | 2.5E+02 | 3.5E+02 |
| **4-Bromofluorobenzene** | **460-00-4** | ppbv | 4.4E+02 | 4.1E+02 | 4.3E+02 | 4.1E+02 | 4.0E+02 | 3.9E+02 | 4.2E+02 | 4.6E+02 | 4.0E+02 | 4.3E+02 | 4.2E+02 | 4.2E+02 | 4.2E+02 | 4.2E+02 |
| **BENZENE** | **71-43-2** | ppbv | 6.3E+02 | 1.3E+03 | 6.3E+02 | 6.3E+02 | 3.1E+02 | 6.3E+01 | 3.1E+02 | 3.1E+02 | 3.1E+02 | 3.1E+02 | 3.1E+02 | 3.1E+02 | 3.1E+02 | 4.4E+02 |
| **CARBON TETRACHLORIDE** | **56-23-5** | ppbv | 3.2E+02 | 6.4E+02 | 3.2E+02 | 3.2E+02 | 1.6E+02 | 3.2E+01 | 1.6E+02 | 1.6E+02 | 1.6E+02 | 1.6E+02 | 1.6E+02 | 1.6E+02 | 1.6E+02 | 2.2E+02 |
| **CHLOROETHANE** | **75-00-3** | ppbv | 3.8E+03 | 7.6E+03 | 3.8E+03 | 3.8E+03 | 1.9E+03 | 3.8E+02 | 1.9E+03 | 1.9E+03 | 1.9E+03 | 1.9E+03 | 1.9E+03 | 1.9E+03 | 1.9E+03 | 2.7E+03 |
| **CHLOROFORM** | **67-66-3** | ppbv | 4.1E+02 | 9.6E+02 | 1.0E+03 | 1.3E+03 | 2.0E+02 | 4.1E+01 | 2.0E+02 | 2.0E+02 | 9.8E+02 | 1.0E+03 | 2.9E+03 | 1.9E+03 | 2.7E+03 | 1.1E+03 |
| **CIS-1,2-DICHLOROETHENE** | **156-59-2** | ppbv | 2.5E+03 | 5.0E+03 | 2.5E+03 | 2.5E+03 | 1.3E+03 | 2.5E+02 | 1.3E+03 | 1.3E+03 | 1.3E+03 | 1.3E+03 | 1.3E+03 | 1.3E+03 | 1.3E+03 | 1.8E+03 |
| **ETHYLBENZENE** | **100-41-4** | ppbv | 2.3E+03 | 4.6E+03 | 2.3E+03 | 2.3E+03 | 1.2E+03 | 2.3E+02 | 1.2E+03 | 1.2E+03 | 1.2E+03 | 1.2E+03 | 1.2E+03 | 1.2E+03 | 1.2E+03 | 1.6E+03 |
| **Freon 11** | **75-69-4** | ppbv | 6.2E+03 | 9.4E+04 | 9.6E+04 | 1.2E+05 | 3.2E+03 | 1.2E+03 | 8.5E+04 | 1.0E+05 | 2.0E+04 | 2.0E+04 | 9.3E+04 | 3.4E+04 | 3.9E+04 | 5.4E+04 |
| **Freon 113** | **76-13-1** | ppbv | 1.2E+04 | 5.0E+05 | 1.7E+06 | 4.7E+06 | 4.3E+03 | 5.5E+03 | 8.0E+05 | 1.4E+06 | 4.3E+04 | 4.3E+04 | 8.2E+05 | 9.5E+04 | 2.1E+05 | 8.0E+05 |
| **Freon 12** | **75-71-8** | ppbv | 2.0E+03 | 4.0E+03 | 2.0E+03 | 2.0E+03 | 1.0E+03 | 2.0E+02 | 1.0E+03 | 1.0E+03 | 1.0E+03 | 1.0E+03 | 1.0E+03 | 1.0E+03 | 1.0E+03 | 1.4E+03 |
| **m,p-Xylene** | **1330-20-7** | ppbv | 2.3E+03 | 4.6E+03 | 2.3E+03 | 2.3E+03 | 1.2E+03 | 2.3E+02 | 1.2E+03 | 1.2E+03 | 1.2E+03 | 1.2E+03 | 1.2E+03 | 1.2E+03 | 1.2E+03 | 1.6E+03 |
| **METHYLENE CHLORIDE** | **75-09-2** | ppbv | 2.9E+03 | 5.8E+03 | 2.9E+03 | 2.9E+03 | 1.4E+03 | 2.9E+02 | 1.4E+03 | 1.4E+03 | 1.4E+03 | 1.4E+03 | 1.4E+03 | 1.4E+03 | 1.4E+03 | 2.0E+03 |
| **O-XYLENE** | **95-47-6** | ppbv | 2.3E+03 | 4.6E+03 | 2.3E+03 | 2.3E+03 | 1.2E+03 | 2.3E+02 | 1.2E+03 | 1.2E+03 | 1.2E+03 | 1.2E+03 | 1.2E+03 | 1.2E+03 | 1.2E+03 | 1.6E+03 |
| **Tetrachloroethene (PCE)** | **127-18-4** | ppbv | 2.2E+04 | 4.7E+05 | 1.1E+06 | 3.5E+06 | 2.8E+03 | 1.6E+03 | 1.4E+05 | 2.5E+04 | 1.8E+04 | 1.9E+04 | 5.0E+05 | 4.3E+04 | 1.1E+05 | 4.6E+05 |
| **TOLUENE** | **108-88-3** | ppbv | 5.3E+03 | 1.1E+04 | 5.3E+03 | 5.3E+03 | 2.7E+03 | 5.3E+02 | 2.7E+03 | 2.7E+03 | 2.7E+03 | 2.7E+03 | 2.7E+03 | 2.7E+03 | 2.7E+03 | 3.7E+03 |
| **TRANS-1,2-DICHLOROETHENE** | **156-60-5** | ppbv | 2.5E+03 | 5.0E+03 | 2.5E+03 | 2.5E+03 | 1.3E+03 | 2.5E+02 | 1.3E+03 | 1.3E+03 | 1.3E+03 | 1.3E+03 | 1.3E+03 | 1.3E+03 | 1.3E+03 | 1.8E+03 |
| **Trichloroethene (TCE)** | **79-01-6** | ppbv | 3.2E+03 | 2.8E+04 | 2.8E+04 | 3.5E+04 | 1.4E+03 | 1.8E+02 | 2.4E+04 | 1.2E+04 | 3.2E+03 | 3.2E+03 | 2.4E+04 | 5.4E+03 | 9.9E+03 | 1.4E+04 |
| **VINYL CHLORIDE** | **75-01-4** | ppbv | 3.9E+02 | 7.8E+02 | 3.9E+02 | 3.9E+02 | 2.0E+02 | 3.9E+01 | 2.0E+02 | 2.0E+02 | 2.0E+02 | 2.0E+02 | 2.0E+02 | 2.0E+02 | 2.0E+02 | 2.7E+02 |

**Omega Chemical Site**
**Full Scale On Site Soils Remedy**
**Preliminary Design Report**
**Influent Estimate Detail for Well:** DPE-8
**Basis for Estimated Concentrations:** VMP-1

Performed by JTB Date 10/2/2012
Checked by IL Date 10/10/2012

See Notes on Summary Tab

| Average of NumericResult2 | | | SampleLocation | SampBegDepth | SampEndDepth | Date | | | |
|---|---|---|---|---|---|---|---|---|---|
| | | | VMP-1 (blank) (blank) | | | | | | Overall Average |
| Parameter | CAS | Units2 | 4/11/2011 12:44 | 6/30/2011 16:38 | 9/7/2011 13:37 | 12/20/2011 14:28 | 3/27/2012 15:26 | 6/12/2012 17:38 | |
| 1,1,1-Trichloroethane (TCA) | 71-55-6 | ppbv | 2.0E+00 | 1.8E+00 | 2.0E+00 | 1.8E+00 | 5.5E-01 | 5.5E-01 | 1.5E+00 |
| 1,1,2,2-TETRACHLOROETHANE | 79-34-5 | ppbv | | | | | 1.0E+00 | 1.0E+00 | 1.0E+00 |
| 1,1,2-TRICHLOROETHANE | 79-00-5 | ppbv | 2.0E+00 | 1.8E+00 | 2.0E+00 | 1.8E+00 | 5.5E-01 | 5.5E-01 | 1.5E+00 |
| 1,1-DICHLOROETHANE | 75-34-3 | ppbv | 2.0E+00 | 1.7E+00 | 2.0E+00 | 1.7E+00 | 4.9E-01 | 4.9E-01 | 1.4E+00 |
| 1,1-DICHLOROETHENE | 75-35-4 | ppbv | 3.0E+01 | 1.8E+00 | 4.0E+00 | 2.5E-01 | 5.0E-01 | 1.0E+00 | 6.3E+00 |
| 1,2,4-TRICHLOROBENZENE | 120-82-1 | ppbv | | | | | 2.0E+00 | 2.0E+00 | 2.0E+00 |
| 1,2,4-TRIMETHYLBENZENE | 95-63-6 | ppbv | | | | | 1.4E+00 | 1.4E+00 | 1.4E+00 |
| 1,2-Dibromoethane (EDB) | 106-93-4 | ppbv | 2.1E+00 | 1.7E+00 | 2.1E+00 | 1.7E+00 | 5.2E-01 | 5.2E-01 | 1.4E+00 |
| 1,2-DICHLOROBENZENE | 95-50-1 | ppbv | | | | | 5.0E-01 | 5.0E-01 | 5.0E-01 |
| 1,2-DICHLOROETHANE | 107-06-2 | ppbv | 2.0E+00 | 1.7E+00 | 2.0E+00 | 1.7E+00 | 4.9E-01 | 4.9E-01 | 1.4E+00 |
| 1,2-DICHLOROPROPANE | 78-87-5 | ppbv | 1.9E+00 | 1.7E+00 | 1.9E+00 | 1.7E+00 | 4.3E-01 | 4.3E-01 | 1.4E+00 |
| 1,2-Dichlorotetrafluoroethane | 76-14-2 | ppbv | 2.0E+00 | 1.7E+00 | 2.0E+00 | 1.7E+00 | 2.0E+00 | 2.0E+00 | 1.9E+00 |
| 1,3,5-TRIMETHYLBENZENE | 108-67-8 | ppbv | | | | | 6.1E-01 | 6.1E-01 | 6.1E-01 |
| 1,3-DICHLOROBENZENE | 541-73-1 | ppbv | | | | | 5.0E-01 | 5.0E-01 | 5.0E-01 |
| 1,4-DICHLOROBENZENE | 106-46-7 | ppbv | | | | | 5.0E-01 | 5.0E-01 | 5.0E-01 |
| 1,4-DIOXANE | 123-91-1 | ppbv | 1.0E+01 | 8.6E+00 | 1.0E+01 | 8.6E+00 | 1.0E+01 | 1.0E+01 | 9.5E+00 |
| 2-HEXANONE | 591-78-6 | ppbv | 2.0E+00 | 1.7E+00 | 5.4E+00 | 1.7E+00 | 1.5E+00 | 1.5E+00 | 2.3E+00 |
| 4-ETHYLTOLUENE | 622-96-8 | ppbv | | | | | 6.1E-01 | 6.1E-01 | 6.1E-01 |
| ACETONE | 67-64-1 | ppbv | 5.5E+01 | 1.9E+01 | 2.0E+02 | 3.0E+01 | 1.1E+01 | 2.0E+01 | 5.5E+01 |
| BENZENE | 71-43-2 | ppbv | 9.4E-01 | 3.1E-01 | 6.3E-01 | 2.5E+00 | 6.3E-01 | 6.3E-01 | 9.4E-01 |
| BENZYL CHLORIDE | 100-44-7 | ppbv | | | | | 1.5E+00 | 1.5E+00 | 1.5E+00 |
| BROMODICHLOROMETHANE | 75-27-4 | ppbv | 2.1E+00 | 1.8E+00 | 2.1E+00 | 1.8E+00 | 4.5E-01 | 4.5E-01 | 1.4E+00 |
| BROMOFORM | 75-25-2 | ppbv | | | | | 4.8E-01 | 4.8E-01 | 4.8E-01 |
| BROMOMETHANE | 74-83-9 | ppbv | 2.1E+00 | 1.8E+00 | 2.1E+00 | 1.8E+00 | 5.2E-01 | 5.2E-01 | 1.5E+00 |
| CARBON DISULFIDE | 75-15-0 | ppbv | 1.6E+00 | 8.7E+00 | 2.2E+00 | 6.4E-01 | 1.9E+00 | 1.9E+00 | 2.8E+00 |
| CARBON TETRACHLORIDE | 56-23-5 | ppbv | 2.1E+00 | 1.7E+00 | 2.1E+00 | 1.7E+00 | 4.8E-01 | 4.8E-01 | 1.4E+00 |
| CHLOROBENZENE | 108-90-7 | ppbv | 2.0E+00 | 1.7E+00 | 2.0E+00 | 1.7E+00 | 4.3E-01 | 4.3E-01 | 1.4E+00 |
| CHLOROETHANE | 75-00-3 | ppbv | 1.9E+00 | 1.9E+00 | 1.9E+00 | 1.9E+00 | 3.8E-01 | 3.8E-01 | 1.4E+00 |
| CHLOROFORM | 67-66-3 | ppbv | 8.2E-01 | 1.8E+00 | 4.1E-01 | 2.0E-01 | 4.1E-01 | 4.1E-01 | 6.8E-01 |
| CHLOROMETHANE | 74-87-3 | ppbv | 1.5E+00 | 9.7E-01 | 9.7E-01 | 1.9E+00 | 9.7E-01 | 4.8E-01 | 1.1E+00 |
| CIS-1,2-DICHLOROETHENE | 156-59-2 | ppbv | 2.0E+00 | 1.8E+00 | 5.0E-01 | 1.8E+00 | 5.0E-01 | 5.0E-01 | 1.2E+00 |
| CIS-1,3-DICHLOROPROPENE | 10061-01-5 | ppbv | 2.0E+00 | 1.8E+00 | 2.0E+00 | 1.8E+00 | 4.4E-01 | 4.4E-01 | 1.4E+00 |
| DIBROMOCHLOROMETHANE | 124-48-1 | ppbv | 2.0E+00 | 1.8E+00 | 2.0E+00 | 1.8E+00 | 4.7E-01 | 4.7E-01 | 1.4E+00 |
| ETHYLBENZENE | 100-41-4 | ppbv | 6.9E-01 | 1.8E+00 | 2.1E+00 | 9.2E-01 | 4.6E-01 | 4.6E-01 | 1.1E+00 |
| Freon 11 | 75-69-4 | ppbv | 4.8E+00 | 1.8E+00 | 2.0E+00 | 8.9E-01 | 1.1E+00 | 1.1E+00 | 1.9E+00 |
| Freon 113 | 76-13-1 | ppbv | 7.6E+00 | 1.7E+00 | 2.0E+00 | 1.7E+00 | 1.4E+00 | 1.4E+00 | 2.6E+00 |
| Freon 12 | 75-71-8 | ppbv | 1.0E+00 | 6.1E-01 | 6.1E-01 | 1.8E+00 | 6.1E-01 | 6.1E-01 | 8.8E-01 |
| HEXACHLOROBUTADIENE | 87-68-3 | ppbv | | | | | 1.5E+00 | 1.5E+00 | 1.5E+00 |
| HEXANE (N-HEXANE) | 110-54-3 | ppbv | 1.0E+01 | 8.8E+00 | 1.7E+00 | 1.7E+00 | 2.0E+00 | 2.0E+00 | 4.4E+00 |
| ISOPROPYL ALCOHOL (ISOPROPANOL) | 67-63-0 | ppbv | 8.1E-01 | 8.5E+00 | 1.0E+01 | 9.0E+00 | 4.9E+00 | 4.9E+00 | 6.4E+00 |
| m,p-Xylene | 1330-20-7 | ppbv | 2.8E+00 | 6.9E-01 | 2.1E+00 | 3.0E+00 | 2.1E+00 | 2.1E+00 | 2.1E+00 |
| Methyl ethyl ketone | 78-93-3 | ppbv | 4.7E+00 | 1.7E+00 | 5.4E+01 | 2.4E+00 | 1.4E+00 | 1.4E+00 | 1.1E+01 |
| METHYL ISOBUTYL KETONE | 108-10-1 | ppbv | 2.0E+00 | 1.7E+00 | 2.0E+00 | 1.7E+00 | 1.5E+00 | 1.5E+00 | 1.7E+00 |
| METHYL TERT-BUTYL ETHER | 1634-04-4 | ppbv | 1.9E+00 | 1.7E+00 | 1.9E+00 | 1.7E+00 | 1.9E+00 | 1.9E+00 | 1.8E+00 |
| METHYLENE CHLORIDE | 75-09-2 | ppbv | 2.0E+00 | 1.7E+00 | 2.0E+00 | 1.4E+00 | 4.9E+00 | 4.9E+00 | 2.8E+00 |
| O-XYLENE | 95-47-6 | ppbv | 9.2E-01 | 1.8E+00 | 2.1E+00 | 9.2E-01 | 4.6E-01 | 4.6E-01 | 1.1E+00 |
| STYRENE | 100-42-5 | ppbv | | | | | 1.4E+00 | 1.4E+00 | 1.4E+00 |
| Tetrachloroethene (PCE) | 127-18-4 | ppbv | 1.9E+02 | 2.1E+00 | 1.4E+02 | 7.2E+00 | 2.8E+00 | 3.5E+01 | 6.3E+01 |
| TOLUENE | 108-88-3 | ppbv | 2.7E+00 | 8.0E-01 | 1.1E+00 | 1.2E+01 | 8.0E-01 | 5.3E-01 | 2.9E+00 |
| TRANS-1,2-DICHLOROETHENE | 156-60-5 | ppbv | 5.0E-01 | 1.8E+00 | 2.0E+00 | 1.8E+00 | 5.0E-01 | 5.0E-01 | 1.2E+00 |
| TRANS-1,3-DICHLOROPROPENE | 10061-02-6 | ppbv | 2.0E+00 | 1.8E+00 | 2.0E+00 | 1.8E+00 | 1.1E+00 | 1.1E+00 | 1.6E+00 |
| Trichloroethene (TCE) | 79-01-6 | ppbv | 4.1E+01 | 1.7E+00 | 4.8E+00 | 1.7E+00 | 5.6E-01 | 2.0E+00 | 8.6E+00 |
| VINYL ACETATE | 108-05-4 | ppbv | 1.0E+01 | 8.8E+00 | 1.0E+01 | 8.8E+00 | 2.0E+00 | 2.0E+00 | 7.0E+00 |
| VINYL CHLORIDE | 75-01-4 | ppbv | 2.0E+00 | 2.0E+00 | 2.0E+00 | 2.0E+00 | 3.9E-01 | 3.9E-01 | 1.4E+00 |

**Omega Chemical Site**
**Full Scale On Site Soils Remedy** Performed by DN Date 5/8/2013
**Preliminary Design Report** Checked by DN Date 5/15/2013
**Influent Estimate Detail for Well:** DPE-9
**Basis for Estimated Concentrations:** VMPs 31B, 31C, 32B, and 32C

See Notes on Summary Tab

| Average of NumericResult2 | | | SampleLocation | SampBegDepth | SampEndDepth | Date | | | | | | |
|---|---|---|---|---|---|---|---|---|---|---|---|---|
| | | | VMP-31 | | | | VMP-32 | | | | | Overall Average |
| | | | 40 | 55 | 60 | 70 | 40 | 55 | 60 | | 70 | |
| | | | (blank) | (blank) | (blank) | (blank) | (blank) | (blank) | (blank) | (blank) | (blank) | |
| Parameter | CAS | Units2 | 3/9/2011 14:56 | 3/3/2011 11:05 | 3/9/2011 15:15 | 3/9/2011 15:23 | 3/9/2011 13:38 | 3/3/2011 9:14 | 3/9/2011 14:06 | 3/9/2011 14:07 | 3/9/2011 14:35 | |
| 1,1,1,2-TETRACHLOROETHANE | 630-20-6 | ppbv | 1.5E+02 | 2.9E+03 | 1.5E+02 | 1.5E+03 | 1.5E+03 | 7.3E+02 | 5.4E+01 | 2.9E+03 | 7.3E+02 | 1.2E+03 |
| 1,1,1-Trichloroethane (TCA) | 71-55-6 | ppbv | 1.8E+02 | 3.7E+03 | 1.8E+02 | 1.8E+03 | 1.8E+03 | 9.2E+02 | 5.5E+01 | 3.7E+03 | 9.2E+02 | 1.5E+03 |
| 1,1,2,2-TETRACHLOROETHANE | 79-34-5 | ppbv | 1.5E+02 | 2.9E+03 | 1.5E+02 | 1.5E+03 | 1.5E+03 | 7.3E+02 | 1.1E+02 | 2.9E+03 | 7.3E+02 | 1.2E+03 |
| 1,1,2-TRICHLOROETHANE | 79-00-5 | ppbv | 1.8E+02 | 3.7E+03 | 1.8E+02 | 1.8E+03 | 1.8E+03 | 9.2E+02 | 5.5E+01 | 3.7E+03 | 9.2E+02 | 1.5E+03 |
| 1,1-DICHLOROETHANE | 75-34-3 | ppbv | 2.5E+02 | 4.9E+03 | 2.5E+02 | 2.5E+03 | 2.5E+03 | 1.2E+03 | 5.4E+01 | 4.9E+03 | 1.2E+03 | 2.0E+03 |
| 1,1-DICHLOROETHENE | 75-35-4 | ppbv | 2.5E+02 | 5.0E+04 | 3.5E+02 | 5.3E+04 | 2.4E+05 | 1.1E+05 | 1.1E+03 | 1.1E+04 | 4.5E+03 | 5.2E+04 |
| 1,1-Difluoroethane | 75-37-6 | ppbv | 3.7E+03 | 7.4E+03 | 3.7E+03 | 3.7E+03 | 3.7E+03 | 3.7E+03 | | 7.4E+03 | 3.7E+03 | 4.6E+03 |
| 1,2,4-TRICHLOROBENZENE | 120-82-1 | ppbv | | | | | | | 1.1E+02 | | | 1.1E+02 |
| 1,2,4-TRIMETHYLBENZENE | 95-63-6 | ppbv | | | | | | | 1.1E+02 | | | 1.1E+02 |
| 1,2-Dibromoethane (EDB) | 106-93-4 | ppbv | | | | | | | 5.5E+01 | | | 5.5E+01 |
| 1,2-DICHLOROBENZENE | 95-50-1 | ppbv | | | | | | | 5.5E+01 | | | 5.5E+01 |
| 1,2-DICHLOROETHANE | 107-06-2 | ppbv | 4.9E+01 | 9.9E+02 | 4.9E+01 | 4.9E+02 | 4.9E+02 | 2.5E+02 | 5.4E+01 | 9.9E+02 | 2.5E+02 | 4.0E+02 |
| 1,2-DICHLOROPROPANE | 78-87-5 | ppbv | | | | | | | 5.4E+01 | | | 5.4E+01 |
| 1,2-Dichlorotetrafluoroethane | 76-14-2 | ppbv | | | | | | | 5.4E+01 | | | 5.4E+01 |
| 1,3,5-TRIMETHYLBENZENE | 108-67-8 | ppbv | | | | | | | 1.1E+02 | | | 1.1E+02 |
| 1,3-DICHLOROBENZENE | 541-73-1 | ppbv | | | | | | | 5.5E+01 | | | 5.5E+01 |
| 1,4-DICHLOROBENZENE | 106-46-7 | ppbv | | | | | | | 5.5E+01 | | | 5.5E+01 |
| 1,4-DIOXANE | 123-91-1 | ppbv | | | | | | | 2.7E+02 | | | 2.7E+02 |
| 2-HEXANONE | 591-78-6 | ppbv | | | | | | | 5.4E+01 | | | 5.4E+01 |
| 4-Bromofluorobenzene | 460-00-4 | ppbv | 4.4E+02 | 4.2E+02 | 4.2E+02 | 4.2E+02 | 4.3E+02 | 4.3E+02 | | 4.1E+02 | 4.1E+02 | 4.2E+02 |
| 4-ETHYLTOLUENE | 622-96-8 | ppbv | | | | | | | 5.5E+01 | | | 5.5E+01 |
| ACETONE | 67-64-1 | ppbv | | | | | | | 1.6E+02 | | | 1.6E+02 |
| BENZENE | 71-43-2 | ppbv | 6.3E+01 | 1.3E+03 | 6.3E+01 | 6.3E+02 | 6.3E+02 | 3.1E+02 | 5.3E+01 | 1.3E+03 | 3.1E+02 | 5.1E+02 |
| BENZYL CHLORIDE | 100-44-7 | ppbv | | | | | | | 5.4E+01 | | | 5.4E+01 |
| BROMODICHLOROMETHANE | 75-27-4 | ppbv | | | | | | | 5.4E+01 | | | 5.4E+01 |
| BROMOFORM | 75-25-2 | ppbv | | | | | | | 5.4E+01 | | | 5.4E+01 |
| BROMOMETHANE | 74-83-9 | ppbv | | | | | | | 5.4E+01 | | | 5.4E+01 |
| CARBON DISULFIDE | 75-15-0 | ppbv | | | | | | | 7.4E+01 | | | 7.4E+01 |
| CARBON TETRACHLORIDE | 56-23-5 | ppbv | 3.2E+01 | 6.4E+02 | 3.2E+01 | 3.2E+02 | 3.2E+02 | 1.6E+02 | 5.4E+01 | 6.4E+02 | 1.6E+02 | 2.6E+02 |
| CHLOROBENZENE | 108-90-7 | ppbv | | | | | | | 5.4E+01 | | | 5.4E+01 |
| CHLOROETHANE | 75-00-3 | ppbv | 3.8E+02 | 7.6E+03 | 3.8E+02 | 3.8E+03 | 3.8E+03 | 1.9E+03 | 5.3E+01 | 7.6E+03 | 1.9E+03 | 3.0E+03 |
| CHLOROFORM | 67-66-3 | ppbv | 4.1E+01 | 3.7E+03 | 4.9E+01 | 5.9E+03 | 5.9E+03 | 4.1E+03 | 1.9E+02 | 8.2E+02 | 5.5E+02 | 2.4E+03 |
| CHLOROMETHANE | 74-87-3 | ppbv | | | | | | | 1.1E+02 | | | 1.1E+02 |
| CIS-1,2-DICHLOROETHENE | 156-59-2 | ppbv | 2.5E+02 | 5.0E+03 | 2.5E+02 | 2.5E+03 | 2.5E+03 | 1.3E+03 | 5.3E+01 | 5.0E+03 | 1.3E+03 | 2.0E+03 |
| CIS-1,3-DICHLOROPROPENE | 10061-01-5 | ppbv | | | | | | | 5.5E+01 | | | 5.5E+01 |
| DIBROMOCHLOROMETHANE | 124-48-1 | ppbv | | | | | | | 5.4E+01 | | | 5.4E+01 |
| ETHYLBENZENE | 100-41-4 | ppbv | 2.3E+02 | 4.6E+03 | 2.3E+02 | 2.3E+03 | 2.3E+03 | 1.2E+03 | 5.5E+01 | 4.6E+03 | 1.2E+03 | 1.8E+03 |
| Freon 11 | 75-69-4 | ppbv | 1.8E+02 | 8.4E+03 | 1.8E+02 | 5.2E+03 | 4.3E+04 | 1.7E+04 | 1.6E+02 | 3.6E+03 | 2.8E+03 | 8.9E+03 |
| Freon 113 | 76-13-1 | ppbv | 1.3E+02 | 3.1E+04 | 1.3E+02 | 2.0E+04 | 2.1E+05 | 6.8E+04 | 5.1E+02 | 1.1E+04 | 1.3E+04 | 3.9E+04 |
| Freon 12 | 75-71-8 | ppbv | 2.0E+02 | 4.0E+03 | 2.0E+02 | 2.0E+03 | 2.0E+03 | 1.0E+03 | 5.5E+01 | 4.0E+03 | 1.0E+03 | 1.6E+03 |
| HEXACHLOROBUTADIENE | 87-68-3 | ppbv | | | | | | | 5.4E+01 | | | 5.4E+01 |
| HEXANE (N-HEXANE) | 110-54-3 | ppbv | | | | | | | 2.7E+02 | | | 2.7E+02 |
| ISOPROPYL ALCOHOL (ISOPROPANOL) | 67-63-0 | ppbv | | | | | | | 2.7E+02 | | | 2.7E+02 |
| m,p-Xylene | 1330-20-7 | ppbv | 2.3E+02 | 4.6E+03 | 2.3E+02 | 2.3E+03 | 2.3E+03 | 1.2E+03 | 1.9E+01 | 4.6E+03 | 1.2E+03 | 1.8E+03 |
| Methyl ethyl ketone | 78-93-3 | ppbv | | | | | | | 5.4E+01 | | | 5.4E+01 |
| METHYL ISOBUTYL KETONE | 108-10-1 | ppbv | | | | | | | 5.4E+01 | | | 5.4E+01 |
| METHYL TERT-BUTYL ETHER | 1634-04-4 | ppbv | | | | | | | 5.5E+01 | | | 5.5E+01 |
| METHYLENE CHLORIDE | 75-09-2 | ppbv | 2.9E+02 | 5.8E+03 | 2.9E+02 | 2.9E+03 | 2.9E+03 | 1.4E+03 | 5.5E+01 | 5.8E+03 | 1.4E+03 | 2.3E+03 |
| O-XYLENE | 95-47-6 | ppbv | 2.3E+02 | 4.6E+03 | 2.3E+02 | 2.3E+03 | 2.3E+03 | 1.2E+03 | 5.5E+00 | 4.6E+03 | 1.2E+03 | 1.8E+03 |
| STYRENE | 100-42-5 | ppbv | | | | | | | 1.7E+01 | | | 1.7E+01 |
| Tetrachloroethene (PCE) | 127-18-4 | ppbv | 6.0E+03 | 2.1E+05 | 7.7E+03 | 1.8E+05 | 7.1E+05 | 2.8E+05 | 1.2E+04 | 4.6E+04 | 2.5E+04 | 1.6E+05 |
| TOLUENE | 108-88-3 | ppbv | 5.3E+02 | 1.1E+04 | 5.3E+02 | 5.3E+03 | 5.3E+03 | 2.7E+03 | 2.9E+01 | 1.1E+04 | 2.7E+03 | 4.2E+03 |
| TRANS-1,2-DICHLOROETHENE | 156-60-5 | ppbv | 2.5E+02 | 5.0E+03 | 2.5E+02 | 2.5E+03 | 2.5E+03 | 1.3E+03 | 5.3E+01 | 5.0E+03 | 1.3E+03 | 2.0E+03 |
| TRANS-1,3-DICHLOROPROPENE | 10061-02-6 | ppbv | | | | | | | 5.5E+01 | | | 5.5E+01 |
| Trichloroethene (TCE) | 79-01-6 | ppbv | 3.7E+01 | 1.0E+04 | 2.6E+02 | 1.2E+04 | 3.9E+04 | 2.6E+04 | 6.3E+02 | 2.0E+03 | 1.5E+03 | 1.0E+04 |
| VINYL ACETATE | 108-05-4 | ppbv | | | | | | | 2.7E+02 | | | 2.7E+02 |
| VINYL CHLORIDE | 75-01-4 | ppbv | 3.9E+01 | 7.8E+02 | 3.9E+01 | 3.9E+02 | 3.9E+02 | 2.0E+02 | 5.5E+01 | 7.8E+02 | 2.0E+02 | 3.2E+02 |

**Omega Chemical Site**
**Full Scale On Site Soils Remedy**
**Preliminary Design Report**
**Influent Estimate Detail for Well:** VE-10D
**Basis for Estimated Concentrations:** VMPs 32B, 32C, 33B, and 33C

Performed by DN Date 5/8/2013
Checked by JTB Date 5/15/2013

See Notes on Summary Tab

| Average of NumericResult2 | | | SampleLocation | SampBegDepth | SampEndDepth | Date | | | | | |
|---|---|---|---|---|---|---|---|---|---|---|---|
| | | | VMP-32 | | | | | VMP-33 | | | Overall Average |
| | | | 40 | 55 | 60 | | 70 | 40 | 55 | 60 | |
| | | | (blank) | (blank) | 60 | (blank) | (blank) | (blank) | (blank) | (blank) | |
| Parameter | CAS | Units2 | 3/9/2011 13:38 | 3/3/2011 9:14 | 3/9/2011 14:06 | 3/9/2011 14:06 | 3/9/2011 14:07 | 3/9/2011 14:35 | 3/9/2011 10:55 | 3/3/2011 12:48 | 3/9/2011 11:26 | |
| 1,1,1,2-TETRACHLOROETHANE | 630-20-6 | ppbv | 1.5E+03 | 7.3E+02 | | 5.4E+01 | 2.9E+03 | 7.3E+02 | 1.5E+03 | 1.5E+03 | 1.5E+03 | 1.3E+03 |
| 1,1,1-Trichloroethane (TCA) | 71-55-6 | ppbv | 1.8E+03 | 9.2E+02 | 5.5E+01 | | 3.7E+03 | 9.2E+02 | 1.8E+03 | 1.8E+03 | 1.8E+03 | 1.6E+03 |
| 1,1,2,2-TETRACHLOROETHANE | 79-34-5 | ppbv | 1.5E+03 | 7.3E+02 | | 1.1E+02 | 2.9E+03 | 7.3E+02 | 1.5E+03 | 1.5E+03 | 1.5E+03 | 1.3E+03 |
| 1,1,2-TRICHLOROETHANE | 79-00-5 | ppbv | 1.8E+03 | 9.2E+02 | 5.5E+01 | | 3.7E+03 | 9.2E+02 | 1.8E+03 | 1.8E+03 | 1.8E+03 | 1.6E+03 |
| 1,1-DICHLOROETHANE | 75-34-3 | ppbv | 2.5E+03 | 1.2E+03 | 5.4E+01 | | 4.9E+03 | 1.2E+03 | 2.5E+03 | 2.5E+03 | 2.5E+03 | 2.2E+03 |
| 1,1-DICHLOROETHENE | 75-35-4 | ppbv | 2.4E+05 | 1.1E+05 | 1.1E+03 | | 1.1E+04 | 4.5E+03 | 9.8E+04 | 2.0E+05 | 3.0E+05 | 1.2E+05 |
| 1,1-Difluoroethane | 75-37-6 | ppbv | 3.7E+03 | 3.7E+03 | | | 7.4E+03 | 3.7E+03 | 3.7E+03 | 3.7E+03 | 3.7E+03 | 4.2E+03 |
| 1,2,4-TRICHLOROBENZENE | 120-82-1 | ppbv | | | 1.1E+02 | | | | | | | 1.1E+02 |
| 1,2,4-TRIMETHYLBENZENE | 95-63-6 | ppbv | | | 1.1E+02 | | | | | | | 1.1E+02 |
| 1,2-Dibromoethane (EDB) | 106-93-4 | ppbv | | | 5.5E+01 | | | | | | | 5.5E+01 |
| 1,2-DICHLOROBENZENE | 95-50-1 | ppbv | | | 5.5E+01 | | | | | | | 5.5E+01 |
| 1,2-DICHLOROETHANE | 107-06-2 | ppbv | 4.9E+02 | 2.5E+02 | 5.4E+01 | | 9.9E+02 | 2.5E+02 | 4.9E+02 | 4.9E+02 | 4.9E+02 | 4.4E+02 |
| 1,2-DICHLOROPROPANE | 78-87-5 | ppbv | | | 5.4E+01 | | | | | | | 5.4E+01 |
| 1,2-Dichlorotetrafluoroethane | 76-14-2 | ppbv | | | 5.4E+01 | | | | | | | 5.4E+01 |
| 1,3,5-TRIMETHYLBENZENE | 108-67-8 | ppbv | | | 1.1E+02 | | | | | | | 1.1E+02 |
| 1,3-DICHLOROBENZENE | 541-73-1 | ppbv | | | 5.5E+01 | | | | | | | 5.5E+01 |
| 1,4-DICHLOROBENZENE | 106-46-7 | ppbv | | | 5.5E+01 | | | | | | | 5.5E+01 |
| 1,4-DIOXANE | 123-91-1 | ppbv | | | 2.7E+02 | | | | | | | 2.7E+02 |
| 2-HEXANONE | 591-78-6 | ppbv | | | 5.4E+01 | | | | | | | 5.4E+01 |
| 4-Bromofluorobenzene | 460-00-4 | ppbv | 4.3E+02 | 4.3E+02 | | | 4.1E+02 | 4.1E+02 | 4.2E+02 | 4.1E+02 | 4.1E+02 | 4.2E+02 |
| 4-ETHYLTOLUENE | 622-96-8 | ppbv | | | 5.5E+01 | | | | | | | 5.5E+01 |
| ACETONE | 67-64-1 | ppbv | | | 1.6E+02 | | | | | | | 1.6E+02 |
| BENZENE | 71-43-2 | ppbv | 6.3E+02 | 3.1E+02 | 5.3E+01 | | 1.3E+03 | 3.1E+02 | 6.3E+02 | 6.3E+02 | 6.3E+02 | 5.5E+02 |
| BENZYL CHLORIDE | 100-44-7 | ppbv | | | 5.4E+01 | | | | | | | 5.4E+01 |
| BROMODICHLOROMETHANE | 75-27-4 | ppbv | | | 5.4E+01 | | | | | | | 5.4E+01 |
| BROMOFORM | 75-25-2 | ppbv | | | 5.4E+01 | | | | | | | 5.4E+01 |
| BROMOMETHANE | 74-83-9 | ppbv | | | 5.4E+01 | | | | | | | 5.4E+01 |
| CARBON DISULFIDE | 75-15-0 | ppbv | | | 7.4E+01 | | | | | | | 7.4E+01 |
| CARBON TETRACHLORIDE | 56-23-5 | ppbv | 3.2E+02 | 1.6E+02 | 5.4E+01 | | 6.4E+02 | 1.6E+02 | 3.2E+02 | 3.2E+02 | 3.2E+02 | 2.8E+02 |
| CHLOROBENZENE | 108-90-7 | ppbv | | | 5.4E+01 | | | | | | | 5.4E+01 |
| CHLOROETHANE | 75-00-3 | ppbv | 3.8E+03 | 1.9E+03 | 5.3E+01 | | 7.6E+03 | 1.9E+03 | 3.8E+03 | 3.8E+03 | 3.8E+03 | 3.3E+03 |
| CHLOROFORM | 67-66-3 | ppbv | 5.9E+03 | 4.1E+03 | 1.9E+02 | | 8.2E+02 | 5.5E+02 | 4.9E+03 | 4.7E+03 | 6.3E+03 | 3.4E+03 |
| CHLOROMETHANE | 74-87-3 | ppbv | | | 1.1E+02 | | | | | | | 1.1E+02 |
| CIS-1,2-DICHLOROETHENE | 156-59-2 | ppbv | 2.5E+03 | 1.3E+03 | 5.3E+01 | | 5.0E+03 | 1.3E+03 | 2.5E+03 | 2.5E+03 | 2.5E+03 | 2.2E+03 |
| CIS-1,3-DICHLOROPROPENE | 10061-01-5 | ppbv | | | 5.5E+01 | | | | | | | 5.5E+01 |
| DIBROMOCHLOROMETHANE | 124-48-1 | ppbv | | | 5.4E+01 | | | | | | | 5.4E+01 |
| ETHYLBENZENE | 100-41-4 | ppbv | 2.3E+03 | 1.2E+03 | 5.5E+01 | | 4.6E+03 | 1.2E+03 | 2.3E+03 | 2.3E+03 | 2.3E+03 | 2.0E+03 |
| Freon 11 | 75-69-4 | ppbv | 4.3E+04 | 1.7E+04 | 1.6E+02 | | 3.6E+03 | 2.8E+03 | 1.5E+04 | 3.6E+04 | 6.4E+04 | 2.3E+04 |
| Freon 113 | 76-13-1 | ppbv | 2.1E+05 | 6.8E+04 | 5.1E+02 | | 1.1E+04 | 1.3E+04 | 5.6E+04 | 1.4E+05 | 6.1E+05 | 1.4E+05 |
| Freon 12 | 75-71-8 | ppbv | 2.0E+03 | 1.0E+03 | 5.5E+01 | | 4.0E+03 | 1.0E+03 | 2.0E+03 | 2.0E+03 | 2.0E+03 | 1.8E+03 |
| HEXACHLOROBUTADIENE | 87-68-3 | ppbv | | | 5.4E+01 | | | | | | | 5.4E+01 |
| HEXANE (N-HEXANE) | 110-54-3 | ppbv | | | 2.7E+02 | | | | | | | 2.7E+02 |
| ISOPROPYL ALCOHOL (ISOPROPANOL) | 67-63-0 | ppbv | | | 2.7E+02 | | | | | | | 2.7E+02 |
| m,p-Xylene | 1330-20-7 | ppbv | 2.3E+03 | 1.2E+03 | 1.9E+01 | | 4.6E+03 | 1.2E+03 | 2.3E+03 | 2.3E+03 | 2.3E+03 | 2.0E+03 |
| Methyl ethyl ketone | 78-93-3 | ppbv | | | 5.4E+01 | | | | | | | 5.4E+01 |
| METHYL ISOBUTYL KETONE | 108-10-1 | ppbv | | | 5.4E+01 | | | | | | | 5.4E+01 |
| METHYL TERT-BUTYL ETHER | 1634-04-4 | ppbv | | | 5.5E+01 | | | | | | | 5.5E+01 |
| METHYLENE CHLORIDE | 75-09-2 | ppbv | 2.9E+03 | 1.4E+03 | 5.5E+01 | | 5.8E+03 | 1.4E+03 | 2.9E+03 | 2.9E+03 | 2.9E+03 | 2.5E+03 |
| O-XYLENE | 95-47-6 | ppbv | 2.3E+03 | 1.2E+03 | 5.5E+00 | | 4.6E+03 | 1.2E+03 | 2.3E+03 | 2.3E+03 | 2.3E+03 | 2.0E+03 |
| STYRENE | 100-42-5 | ppbv | | | 1.7E+01 | | | | | | | 1.7E+01 |
| Tetrachloroethene (PCE) | 127-18-4 | ppbv | 7.1E+05 | 2.8E+05 | 1.2E+04 | | 4.6E+04 | 2.5E+04 | 2.8E+05 | 5.3E+05 | 7.5E+05 | 3.3E+05 |
| TOLUENE | 108-88-3 | ppbv | 5.3E+03 | 2.7E+03 | 2.9E+01 | | 1.1E+04 | 2.7E+03 | 5.3E+03 | 5.3E+03 | 5.3E+03 | 4.6E+03 |
| TRANS-1,2-DICHLOROETHENE | 156-60-5 | ppbv | 2.5E+03 | 1.3E+03 | 5.3E+01 | | 5.0E+03 | 1.3E+03 | 2.5E+03 | 2.5E+03 | 2.5E+03 | 2.2E+03 |
| TRANS-1,3-DICHLOROPROPENE | 10061-02-6 | ppbv | | | 5.5E+01 | | | | | | | 5.5E+01 |
| Trichloroethene (TCE) | 79-01-6 | ppbv | 3.9E+04 | 2.6E+04 | 6.3E+02 | | 2.0E+03 | 1.5E+03 | 2.2E+04 | 2.8E+04 | 3.5E+04 | 1.9E+04 |
| VINYL ACETATE | 108-05-4 | ppbv | | | 2.7E+02 | | | | | | | 2.7E+02 |
| VINYL CHLORIDE | 75-01-4 | ppbv | 3.9E+02 | 2.0E+02 | 5.5E+01 | | 7.8E+02 | 2.0E+02 | 3.9E+02 | 3.9E+02 | 3.9E+02 | 3.5E+02 |

**Omega Chemical Site**
**Full Scale On Site Soils Remedy** Performed by DN Date 5/8/2013
**Preliminary Design Report** Checked by JTB Date 5/15/2013
**Influent Estimate Detail for Well:** VE-11D
**Basis for Estimated Concentrations:** VMPs 28B, 28C, 29B, 33B, 33C, 34B, 34C, 35B, and 35C

See Notes on Summary Tab

| Average of NumericResult2 | | | SampleLocation | | SampBegDepth | SampEndDepth | | Date | | | | | | | | |
|---|---|---|---|---|---|---|---|---|---|---|---|---|---|---|---|---|
| | | | VMP-28 | | | VMP-33 | | | | VMP-34 | | | | VMP-35 | | | Overall Average |
| | | | | 40 | | | 40 | 55 | 60 | 40 | 55 | 60 | 70 | 40 | 55 | 60 | |
| | | | | (blank) | | | (blank) | (blank) | (blank) | (blank) | (blank) | (blank) | (blank) | (blank) | (blank) | (blank) | |
| Parameter | CAS | Units2 | | 3/9/2011 12:21 | 3/9/2011 12:22 | | 3/9/2011 10:55 | 3/3/2011 12:48 | 3/9/2011 11:26 | 3/9/2011 9:14 | 3/4/2011 13:08 | 3/9/2011 9:46 | 3/9/2011 10:17 | 3/9/2011 8:06 | 3/4/2011 10:04 | 3/9/2011 8:31 | |
| 1,1,1,2-TETRACHLOROETHANE | 630-20-6 | ppbv | | 7.3E+01 | 7.3E+01 | | 1.5E+03 | 1.5E+03 | 1.5E+03 | 7.3E+02 | 2.9E+03 | 1.5E+03 | 1.5E+03 | 7.3E+01 | 7.3E+01 | 7.3E+01 | 9.4E+02 |
| 1,1,1-Trichloroethane (TCA) | 71-55-6 | ppbv | | 9.2E+01 | 9.2E+01 | | 1.8E+03 | 1.8E+03 | 1.8E+03 | 9.2E+02 | 3.7E+03 | 1.8E+03 | 1.8E+03 | 9.2E+01 | 9.2E+01 | 9.2E+01 | 1.2E+03 |
| 1,1,2,2-TETRACHLOROETHANE | 79-34-5 | ppbv | | 7.3E+01 | 7.3E+01 | | 1.5E+03 | 1.5E+03 | 1.5E+03 | 7.3E+02 | 2.9E+03 | 1.5E+03 | 1.5E+03 | 7.3E+01 | 7.3E+01 | 7.3E+01 | 9.4E+02 |
| 1,1,2-TRICHLOROETHANE | 79-00-5 | ppbv | | 9.2E+01 | 9.2E+01 | | 1.8E+03 | 1.8E+03 | 1.8E+03 | 9.2E+02 | 3.7E+03 | 1.8E+03 | 1.8E+03 | 9.2E+01 | 9.2E+01 | 9.2E+01 | 1.2E+03 |
| 1,1-DICHLOROETHANE | 75-34-3 | ppbv | | 1.2E+02 | 1.2E+02 | | 2.5E+03 | 2.5E+03 | 2.5E+03 | 1.2E+03 | 4.9E+03 | 2.5E+03 | 2.5E+03 | 1.2E+02 | 4.4E+02 | 3.2E+02 | 1.6E+03 |
| 1,1-DICHLOROETHENE | 75-35-4 | ppbv | | 1.3E+04 | 1.1E+04 | | 9.8E+04 | 2.0E+05 | 3.0E+05 | 2.4E+05 | 2.0E+05 | 3.3E+05 | 2.2E+05 | 1.9E+04 | 1.2E+05 | 1.4E+05 | 1.6E+05 |
| 1,1-Difluoroethane | 75-37-6 | ppbv | | 3.7E+03 | 3.7E+03 | | 3.7E+03 | 3.7E+03 | 3.7E+03 | 3.7E+03 | 7.4E+03 | 3.7E+03 | 3.7E+03 | 3.7E+03 | 3.7E+03 | 3.7E+03 | 4.0E+03 |
| 1,2-DICHLOROETHANE | 107-06-2 | ppbv | | 2.5E+01 | 2.5E+01 | | 4.9E+02 | 4.9E+02 | 4.9E+02 | 2.5E+02 | 9.9E+02 | 4.9E+02 | 1.3E+03 | 2.5E+01 | 3.5E+02 | 2.0E+02 | 4.3E+02 |
| 4-Bromofluorobenzene | 460-00-4 | ppbv | | 4.3E+02 | 4.6E+02 | | 4.2E+02 | 4.1E+02 | 4.1E+02 | 4.5E+02 | 4.4E+02 | 4.4E+02 | 4.4E+02 | 4.4E+02 | 4.4E+02 | 4.4E+02 | 4.4E+02 |
| BENZENE | 71-43-2 | ppbv | | 4.7E+01 | 5.0E+01 | | 6.3E+02 | 6.3E+02 | 6.3E+02 | 3.1E+02 | 1.3E+03 | 6.3E+02 | 6.3E+02 | 5.3E+01 | 3.1E+01 | 7.5E+01 | 4.1E+02 |
| CARBON TETRACHLORIDE | 56-23-5 | ppbv | | 1.6E+01 | 1.6E+01 | | 3.2E+02 | 3.2E+02 | 3.2E+02 | 1.6E+02 | 6.4E+02 | 3.2E+02 | 3.2E+02 | 1.6E+01 | 1.6E+01 | 1.6E+01 | 2.1E+02 |
| CHLOROETHANE | 75-00-3 | ppbv | | 1.9E+02 | 1.9E+02 | | 3.8E+03 | 3.8E+03 | 3.8E+03 | 1.9E+03 | 7.6E+03 | 3.8E+03 | 3.8E+03 | 1.9E+02 | 1.9E+02 | 1.9E+02 | 2.4E+03 |
| CHLOROFORM | 67-66-3 | ppbv | | 1.9E+02 | 2.0E+02 | | 4.9E+03 | 4.7E+03 | 6.3E+03 | 2.5E+04 | 2.3E+04 | 2.9E+04 | 2.9E+04 | 1.5E+03 | 1.0E+04 | 5.3E+03 | 1.1E+04 |
| CIS-1,2-DICHLOROETHENE | 156-59-2 | ppbv | | 1.3E+02 | 1.3E+02 | | 2.5E+03 | 2.5E+03 | 2.5E+03 | 1.3E+03 | 5.0E+03 | 2.5E+03 | 2.5E+03 | 1.3E+02 | 1.3E+02 | 1.3E+02 | 1.6E+03 |
| ETHYLBENZENE | 100-41-4 | ppbv | | 1.2E+02 | 1.2E+02 | | 2.3E+03 | 2.3E+03 | 2.3E+03 | 1.2E+03 | 4.6E+03 | 2.3E+03 | 2.3E+03 | 1.2E+02 | 1.2E+02 | 1.2E+02 | 1.5E+03 |
| Freon 11 | 75-69-4 | ppbv | | 3.0E+02 | 2.7E+02 | | 1.5E+04 | 3.6E+04 | 6.4E+04 | 4.4E+04 | 3.0E+04 | 5.0E+04 | 2.7E+04 | 1.8E+03 | 1.1E+04 | 8.5E+03 | 2.4E+04 |
| Freon 113 | 76-13-1 | ppbv | | 2.3E+02 | 2.0E+02 | | 5.6E+04 | 1.4E+05 | 6.1E+05 | 1.1E+05 | 6.8E+04 | 1.3E+05 | 4.8E+04 | 3.0E+03 | 2.2E+04 | 2.7E+04 | 1.0E+05 |
| Freon 12 | 75-71-8 | ppbv | | 1.0E+02 | 1.0E+02 | | 2.0E+03 | 2.0E+03 | 2.0E+03 | 1.0E+03 | 4.0E+03 | 2.0E+03 | 2.0E+03 | 1.0E+02 | 1.0E+02 | 1.0E+02 | 1.3E+03 |
| m,p-Xylene | 1330-20-7 | ppbv | | 1.2E+02 | 1.2E+02 | | 2.3E+03 | 2.3E+03 | 2.3E+03 | 1.2E+03 | 4.6E+03 | 2.3E+03 | 2.3E+03 | 1.2E+02 | 1.2E+02 | 1.2E+02 | 1.5E+03 |
| METHYLENE CHLORIDE | 75-09-2 | ppbv | | 1.4E+02 | 1.4E+02 | | 2.9E+03 | 2.9E+03 | 2.9E+03 | 1.4E+03 | 5.8E+03 | 2.9E+03 | 2.9E+03 | 1.4E+02 | 1.4E+02 | 1.4E+02 | 1.9E+03 |
| O-XYLENE | 95-47-6 | ppbv | | 1.2E+02 | 1.2E+02 | | 2.3E+03 | 2.3E+03 | 2.3E+03 | 1.2E+03 | 4.6E+03 | 2.3E+03 | 2.3E+03 | 1.2E+02 | 1.2E+02 | 1.2E+02 | 1.5E+03 |
| Tetrachloroethene (PCE) | 127-18-4 | ppbv | | 1.4E+04 | 1.6E+04 | | 2.8E+05 | 5.3E+05 | 7.5E+05 | 3.4E+05 | 5.8E+05 | 6.6E+05 | 4.1E+05 | 3.1E+03 | 2.2E+05 | 6.0E+04 | 3.2E+05 |
| TOLUENE | 108-88-3 | ppbv | | 2.7E+02 | 2.7E+02 | | 5.3E+03 | 5.3E+03 | 5.3E+03 | 2.7E+03 | 1.1E+04 | 5.3E+03 | 5.3E+03 | 2.7E+02 | 2.7E+02 | 2.7E+02 | 3.4E+03 |
| TRANS-1,2-DICHLOROETHENE | 156-60-5 | ppbv | | 1.3E+02 | 1.3E+02 | | 2.5E+03 | 2.5E+03 | 2.5E+03 | 1.3E+03 | 5.0E+03 | 2.5E+03 | 2.5E+03 | 1.3E+02 | 2.8E+02 | 1.8E+02 | 1.6E+03 |
| Trichloroethene (TCE) | 79-01-6 | ppbv | | 1.2E+03 | 1.2E+03 | | 2.2E+04 | 2.8E+04 | 3.5E+04 | 5.2E+04 | 3.3E+04 | 5.2E+04 | 3.5E+04 | 9.7E+02 | 1.7E+04 | 8.2E+03 | 2.4E+04 |
| VINYL CHLORIDE | 75-01-4 | ppbv | | 2.0E+01 | 2.0E+01 | | 3.9E+02 | 3.9E+02 | 3.9E+02 | 2.0E+02 | 7.8E+02 | 3.9E+02 | 3.9E+02 | 2.0E+01 | 2.0E+01 | 2.0E+01 | 2.5E+02 |

**Omega Chemical Site**
**Full Scale On Site Soils Remedy**
**Preliminary Design Report**
**Influent Estimate Detail for Well:** **VE-12D**
**Basis for Estimated Concentrations:** **VMPs 45B and 45C**

Performed by DN Date 5/8/2013
Checked by JTB Date 5/15/2013

See Notes on Summary Tab

| Average of NumericResult2 | | | SampleLocation | SampBegDepth | SampEndDepth | Date | | |
|---|---|---|---|---|---|---|---|---|
| | | | VMP-45 | | | | | Overall Average |
| | | | 40 | | 55 | 60 | 70 | |
| | | | (blank) | | (blank) | (blank) | (blank) | |
| **Parameter** | **CAS** | **Units2** | **3/18/2011 14:12** | **3/18/2011 14:13** | **3/18/2011 10:54** | **3/18/2011 14:24** | **3/18/2011 14:53** | |
| **1,1,1,2-TETRACHLOROETHANE** | **630-20-6** | ppbv | 7.3E+02 | 7.3E+02 | 7.3E+02 | 7.3E+02 | 7.3E+02 | 7.3E+02 |
| **1,1,1-Trichloroethane (TCA)** | **71-55-6** | ppbv | 9.2E+02 | 9.2E+02 | 9.2E+02 | 9.2E+02 | 9.2E+02 | 9.2E+02 |
| **1,1,2,2-TETRACHLOROETHANE** | **79-34-5** | ppbv | 7.3E+02 | 7.3E+02 | 7.3E+02 | 7.3E+02 | 7.3E+02 | 7.3E+02 |
| **1,1,2-TRICHLOROETHANE** | **79-00-5** | ppbv | 9.2E+02 | 9.2E+02 | 9.2E+02 | 9.2E+02 | 9.2E+02 | 9.2E+02 |
| **1,1-DICHLOROETHANE** | **75-34-3** | ppbv | 1.2E+03 | 1.2E+03 | 1.2E+03 | 1.2E+03 | 1.2E+03 | 1.2E+03 |
| **1,1-DICHLOROETHENE** | **75-35-4** | ppbv | 4.8E+04 | 5.0E+04 | 3.5E+05 | 9.1E+04 | 1.3E+05 | 1.4E+05 |
| **1,1-Difluoroethane** | **75-37-6** | ppbv | 3.7E+03 | 3.7E+03 | 3.7E+03 | 3.7E+03 | 3.7E+03 | 3.7E+03 |
| **1,2-DICHLOROETHANE** | **107-06-2** | ppbv | 2.5E+02 | 2.5E+02 | 2.5E+02 | 2.5E+02 | 2.5E+02 | 2.5E+02 |
| **4-Bromofluorobenzene** | **460-00-4** | ppbv | 4.0E+02 | 4.3E+02 | 4.2E+02 | 4.2E+02 | 4.2E+02 | 4.2E+02 |
| **BENZENE** | **71-43-2** | ppbv | 3.1E+02 | 3.1E+02 | 3.1E+02 | 3.1E+02 | 3.1E+02 | 3.1E+02 |
| **CARBON TETRACHLORIDE** | **56-23-5** | ppbv | 1.6E+02 | 1.6E+02 | 1.6E+02 | 1.6E+02 | 1.6E+02 | 1.6E+02 |
| **CHLOROETHANE** | **75-00-3** | ppbv | 1.9E+03 | 1.9E+03 | 1.9E+03 | 1.9E+03 | 1.9E+03 | 1.9E+03 |
| **CHLOROFORM** | **67-66-3** | ppbv | 9.8E+02 | 1.0E+03 | 2.9E+03 | 1.9E+03 | 2.7E+03 | 1.9E+03 |
| **CIS-1,2-DICHLOROETHENE** | **156-59-2** | ppbv | 1.3E+03 | 1.3E+03 | 1.3E+03 | 1.3E+03 | 1.3E+03 | 1.3E+03 |
| **ETHYLBENZENE** | **100-41-4** | ppbv | 1.2E+03 | 1.2E+03 | 1.2E+03 | 1.2E+03 | 1.2E+03 | 1.2E+03 |
| **Freon 11** | **75-69-4** | ppbv | 2.0E+04 | 2.0E+04 | 9.3E+04 | 3.4E+04 | 3.9E+04 | 4.1E+04 |
| **Freon 113** | **76-13-1** | ppbv | 4.3E+04 | 4.3E+04 | 8.2E+05 | 9.5E+04 | 2.1E+05 | 2.4E+05 |
| **Freon 12** | **75-71-8** | ppbv | 1.0E+03 | 1.0E+03 | 1.0E+03 | 1.0E+03 | 1.0E+03 | 1.0E+03 |
| **m,p-Xylene** | **1330-20-7** | ppbv | 1.2E+03 | 1.2E+03 | 1.2E+03 | 1.2E+03 | 1.2E+03 | 1.2E+03 |
| **METHYLENE CHLORIDE** | **75-09-2** | ppbv | 1.4E+03 | 1.4E+03 | 1.4E+03 | 1.4E+03 | 1.4E+03 | 1.4E+03 |
| **O-XYLENE** | **95-47-6** | ppbv | 1.2E+03 | 1.2E+03 | 1.2E+03 | 1.2E+03 | 1.2E+03 | 1.2E+03 |
| **Tetrachloroethene (PCE)** | **127-18-4** | ppbv | 1.8E+04 | 1.9E+04 | 5.0E+05 | 4.3E+04 | 1.1E+05 | 1.4E+05 |
| **TOLUENE** | **108-88-3** | ppbv | 2.7E+03 | 2.7E+03 | 2.7E+03 | 2.7E+03 | 2.7E+03 | 2.7E+03 |
| **TRANS-1,2-DICHLOROETHENE** | **156-60-5** | ppbv | 1.3E+03 | 1.3E+03 | 1.3E+03 | 1.3E+03 | 1.3E+03 | 1.3E+03 |
| **Trichloroethene (TCE)** | **79-01-6** | ppbv | 3.2E+03 | 3.2E+03 | 2.4E+04 | 5.4E+03 | 9.9E+03 | 9.2E+03 |
| **VINYL CHLORIDE** | **75-01-4** | ppbv | 2.0E+02 | 2.0E+02 | 2.0E+02 | 2.0E+02 | 2.0E+02 | 2.0E+02 |

**Omega Chemical Site**
**Full Scale On Site Soils Remedy**
**Preliminary Design Report**
**Influent Estimate Detail for Well:** **VE-13D**
**Basis for Estimated Concentrations:** **VMPs 34B, 34C, 35B, and 35C**

Performed by DN Date 5/8/2013
Checked by JTB Date 5/15/2013

See Notes on Summary Tab

| Average of NumericResult2 | | | SampleLocation | SampBegDepth | SampEndDepth | Date | | | | |
|---|---|---|---|---|---|---|---|---|---|---|
| | | | VMP-34 | | | | VMP-35 | | | Overall Average |
| | | | 40 | 55 | 60 | 70 | 40 | 55 | 60 | |
| | | | (blank) | (blank) | (blank) | (blank) | (blank) | (blank) | (blank) | |
| **Parameter** | **CAS** | **Units2** | **3/9/2011 9:14** | **3/4/2011 13:08** | **3/9/2011 9:46** | **3/9/2011 10:17** | **3/9/2011 8:06** | **3/4/2011 10:04** | **3/9/2011 8:31** | |
| **1,1,1,2-TETRACHLOROETHANE** | **630-20-6** | ppbv | 7.3E+02 | 2.9E+03 | 1.5E+03 | 1.5E+03 | 7.3E+01 | 7.3E+01 | 7.3E+01 | 9.7E+02 |
| **1,1,1-Trichloroethane (TCA)** | **71-55-6** | ppbv | 9.2E+02 | 3.7E+03 | 1.8E+03 | 1.8E+03 | 9.2E+01 | 9.2E+01 | 9.2E+01 | 1.2E+03 |
| **1,1,2,2-TETRACHLOROETHANE** | **79-34-5** | ppbv | 7.3E+02 | 2.9E+03 | 1.5E+03 | 1.5E+03 | 7.3E+01 | 7.3E+01 | 7.3E+01 | 9.7E+02 |
| **1,1,2-TRICHLOROETHANE** | **79-00-5** | ppbv | 9.2E+02 | 3.7E+03 | 1.8E+03 | 1.8E+03 | 9.2E+01 | 9.2E+01 | 9.2E+01 | 1.2E+03 |
| **1,1-DICHLOROETHANE** | **75-34-3** | ppbv | 1.2E+03 | 4.9E+03 | 2.5E+03 | 2.5E+03 | 1.2E+02 | 4.4E+02 | 3.2E+02 | 1.7E+03 |
| **1,1-DICHLOROETHENE** | **75-35-4** | ppbv | 2.4E+05 | 2.0E+05 | 3.3E+05 | 2.2E+05 | 1.9E+04 | 1.2E+05 | 1.4E+05 | 1.8E+05 |
| **1,1-Difluoroethane** | **75-37-6** | ppbv | 3.7E+03 | 7.4E+03 | 3.7E+03 | 3.7E+03 | 3.7E+03 | 3.7E+03 | 3.7E+03 | 4.2E+03 |
| **1,2-DICHLOROETHANE** | **107-06-2** | ppbv | 2.5E+02 | 9.9E+02 | 4.9E+02 | 1.3E+03 | 2.5E+01 | 3.5E+02 | 2.0E+02 | 5.2E+02 |
| **4-Bromofluorobenzene** | **460-00-4** | ppbv | 4.5E+02 | 4.4E+02 | 4.4E+02 | 4.4E+02 | 4.4E+02 | 4.4E+02 | 4.4E+02 | 4.4E+02 |
| **BENZENE** | **71-43-2** | ppbv | 3.1E+02 | 1.3E+03 | 6.3E+02 | 6.3E+02 | 5.3E+01 | 3.1E+01 | 7.5E+01 | 4.3E+02 |
| **CARBON TETRACHLORIDE** | **56-23-5** | ppbv | 1.6E+02 | 6.4E+02 | 3.2E+02 | 3.2E+02 | 1.6E+01 | 1.6E+01 | 1.6E+01 | 2.1E+02 |
| **CHLOROETHANE** | **75-00-3** | ppbv | 1.9E+03 | 7.6E+03 | 3.8E+03 | 3.8E+03 | 1.9E+02 | 1.9E+02 | 1.9E+02 | 2.5E+03 |
| **CHLOROFORM** | **67-66-3** | ppbv | 2.5E+04 | 2.3E+04 | 2.9E+04 | 2.9E+04 | 1.5E+03 | 1.0E+04 | 5.3E+03 | 1.7E+04 |
| **CIS-1,2-DICHLOROETHENE** | **156-59-2** | ppbv | 1.3E+03 | 5.0E+03 | 2.5E+03 | 2.5E+03 | 1.3E+02 | 1.3E+02 | 1.3E+02 | 1.7E+03 |
| **ETHYLBENZENE** | **100-41-4** | ppbv | 1.2E+03 | 4.6E+03 | 2.3E+03 | 2.3E+03 | 1.2E+02 | 1.2E+02 | 1.2E+02 | 1.5E+03 |
| **Freon 11** | **75-69-4** | ppbv | 4.4E+04 | 3.0E+04 | 5.0E+04 | 2.7E+04 | 1.8E+03 | 1.1E+04 | 8.5E+03 | 2.5E+04 |
| **Freon 113** | **76-13-1** | ppbv | 1.1E+05 | 6.8E+04 | 1.3E+05 | 4.8E+04 | 3.0E+03 | 2.2E+04 | 2.7E+04 | 5.9E+04 |
| **Freon 12** | **75-71-8** | ppbv | 1.0E+03 | 4.0E+03 | 2.0E+03 | 2.0E+03 | 1.0E+02 | 1.0E+02 | 1.0E+02 | 1.3E+03 |
| **m,p-Xylene** | **1330-20-7** | ppbv | 1.2E+03 | 4.6E+03 | 2.3E+03 | 2.3E+03 | 1.2E+02 | 1.2E+02 | 1.2E+02 | 1.5E+03 |
| **METHYLENE CHLORIDE** | **75-09-2** | ppbv | 1.4E+03 | 5.8E+03 | 2.9E+03 | 2.9E+03 | 1.4E+02 | 1.4E+02 | 1.4E+02 | 1.9E+03 |
| **O-XYLENE** | **95-47-6** | ppbv | 1.2E+03 | 4.6E+03 | 2.3E+03 | 2.3E+03 | 1.2E+02 | 1.2E+02 | 1.2E+02 | 1.5E+03 |
| **Tetrachloroethene (PCE)** | **127-18-4** | ppbv | 3.4E+05 | 5.8E+05 | 6.6E+05 | 4.1E+05 | 3.1E+03 | 2.2E+05 | 6.0E+04 | 3.3E+05 |
| **TOLUENE** | **108-88-3** | ppbv | 2.7E+03 | 1.1E+04 | 5.3E+03 | 5.3E+03 | 2.7E+02 | 2.7E+02 | 2.7E+02 | 3.5E+03 |
| **TRANS-1,2-DICHLOROETHENE** | **156-60-5** | ppbv | 1.3E+03 | 5.0E+03 | 2.5E+03 | 2.5E+03 | 1.3E+02 | 2.8E+02 | 1.8E+02 | 1.7E+03 |
| **Trichloroethene (TCE)** | **79-01-6** | ppbv | 5.2E+04 | 3.3E+04 | 5.2E+04 | 3.5E+04 | 9.7E+02 | 1.7E+04 | 8.2E+03 | 2.8E+04 |
| **VINYL CHLORIDE** | **75-01-4** | ppbv | 2.0E+02 | 7.8E+02 | 3.9E+02 | 3.9E+02 | 2.0E+01 | 2.0E+01 | 2.0E+01 | 2.6E+02 |

# Omega OU1 (On Site Soils)
# Full-Scale SVE Design
# GAC Usage Estimates

The carbon supplier (Siemens) provided granular activated carbon (GAC) usage estimates for each Plant. The estimates attached herein for SVE1 and SVE2 includes GAC usage rates for all constituents except for isopropanol, which is uncontrolled by GAC filter vessels. Isopropanol is a relatively low risk compound that does not contribute to health risk, and is typically left untreated in GAC filtration systems.

However, the estimates provided for each plant include many compounds that contribute to an unrealistically high carbon usage rate, as they assume the GAC will be operated to control several compounds that will actually be allowed to breakthrough in the full-scale remedy, as was done with the ISVE1 and ISVE2 systems. For sample, Freon 12 can consume a large amount of GAC by adsorption, but given it is a low health risk compound, is not required to be controlled by South Coast Air Quality Management District (SCAQMD), and therefore should not be included in the GAC usage estimate. The predicted GAC usage by other freons, methylene chloride, and carbon disulfide was not included for the same reasons.

Vinyl chloride was also not included because it adsorbs poorly to GAC. It does contribute to risk calculation but higher influent vinyl chloride concentrations have been observed at ISVE1 and ISVE2 without exceeding risk thresholds. For both plants, if it is determined that the untreated vinyl chloride presents a risk above the health risk threshold, additional control treatment (e.g., treatment in vessel filled with zeolite media embedded with potassium permanganate) will be implemented prior to discharge. As noted in the PDR, a human health risk assessment (HRA) will be performed prior to construction.

This issue was discussed with the GAC vendor and they provided additional estimates where line items for such compounds were removed. Their usage model simply determines the amount of GAC used by each compound separately. Therefore, those additional estimates with fewer compounds in the influent stream did not provide any additional information and are not included herein for clarity.

The table below lists all major compounds of concern, with the exception of isopropanol. Also listed are whether the compound will be controlled, estimated influent concentrations, and estimated GAC usage (at saturation), for each plant. The total estimated GAC usage for each plant that is listed on the last row excludes the totals for uncontrolled compounds. It also includes a safety factor of 1.75 to account for lower loading and higher GAC usage at breakthrough, as opposed to saturation, as is recommended by the vendor.

Based on these estimates, Plant 1 is anticipated to require carbon usage of up to 1,089 pounds per day initially. The initial carbon usage rate for Plant 2 is anticipated to be 3,188 pounds per day. As noted in the PDR and was observed at ISVE1 and ISVE2, it is expected that the influent concentrations, and thus the GAC usage, will drop quickly as pore space volumes in the subsurface are exchanged by SVE.

| Compound | Controlled? | SVE1 | | SVE2 | |
|---|---|---|---|---|---|
| | | GAC Influent Concentration (ppbv) | Predicted Carbon Usage at Breakthrough (lb/day) | GAC Influent Concentration (ppbv) | Predicted Carbon Usage at Breakthrough (lb/day) |
| Tetrachloroethene | Yes | 58,189 | 236 | 78,851 | 613 |
| Trichloroethene | Yes | 5,371 | 81 | 5,529 | 168 |
| 1,1-Dichloroethene | Yes | 14,320 | 397 | 50,796 | 1,662 |
| Vinyl Chloride | **NO** | 185 | 1,258 | 106 | 2,501 |
| 1,1,1-Trichloroethane | Yes | 775 | 29 | 416 | 42 |
| 1,1-Dichloroethane | Yes | 732 | 126 | 568 | 236 |
| 1,2-Dichloroethane | Yes | 219 | 31 | 144 | 54 |
| Chloroform | Yes | 624 | 118 | 1,580 | 318 |
| Methylene Chloride | **NO** | 869 | 1,255 | 667 | 2,548 |
| Freon 11 (Trichlorofluoromethane) | **NO** | 2,250 | 403 | 11,616 | 1,499 |
| Freon 12 (Dichlorodifluoromethane) | **NO** | 621 | 35,698 | 452 | 78,551 |
| Freon 113 (1,1,2-Trichloro-1,2,2-trifluoroethane) | **NO** | 11,469 | 184 | 75,157 | 1,350 |
| Benzene | Yes | 198 | 17 | 152 | 31 |
| Toluene | Yes | 1,449 | 16 | 1,164 | 28 |
| M/P-Xylene | Yes | 700 | 5 | 536 | 9 |
| O-Xylene | Yes | 651 | 5 | 517 | 8 |
| Carbon Disulfide | **NO** | 396 | 4,323 | 86 | 14,167 |
| Methyl Ethyl Ketone (2-Butanone) | Yes | 92 | 29 | 104 | 19 |
| Total Carbon Usage of Controlled Compounds Only (lb/day) | | 1,089 | | 3,188 | |

***Notes***:
Only controlled compounds are included in the grand total. Compounds that are not expected to adsorb to GAC during operation for substantive compliance with SCAQMD regulations are not included given they will not impact GAC replacement timing.

**Omega OU1 (On Site Soils)**
**Full Scale OSS Design**
**Pressure drop calculations**

**Explanation of Calculations**
On each scenario tab, the pressure drops for each system configuration are calculated.
One the other tabs, information for each equipment is calculated, read off a fan curve, or pulled from vendor information.
Blue values are data entry, black are formulas or text, and red are critical results or assumptions.

The calculation occurs in the following steps:
1. Characteristics of each source are entered. This includes flow, temperature, absolute pressure. Conversions are made of these parameters for multiple units for reference and for later use.
Molar volumes and air density are calculated using the ideal gas law.
2. Other parameters and constants, like pipe roughness, ideal gas law constant, the molecular weight of air, etc, are also entered near the top of each spreadsheet.
3. Next, information for the runs of pipe are entered. This includes pipe diameter, length of section, and fitting coefficients.
Fitting loss coefficients are taken from multiple locations:
- Manufacturer-provided information (for silencer only)
- Environmental Engineering Reference Manual, P 36-15
- Building Technology, by B. Stien and W. McGuinness, p 1003
- Metcalf and Eddy, Fourth Edition, Page 442-3
- ASHRAE 2005 Handbook, Chapter 35
- CDM Standard K values (from Cameron Hydraulics) - summarized on Pipe Fittings tab, and used for ball valves only

The source of all fitting loss coefficients are documented in a comment for each cell where used.
4. For each section of pipe (i.e. each line), the following calculations are made, in order of columns

Column D: Pipe diameter is converted to meters. Pipe size is determined by trail and error until reasonable pressure losses are observed in subsequent calculations.
Column E: Pipe area is calculated in square meters.
Column G: Length is converted to meters.
Column I: Flow is copied from above, or added from multiple locations where flow meets.
Column J: Estimated temperature increase or decrease from equipment is listed here.
For heat exchangers (HXs) and liquid ring pumps (LRPs), manufacturer performance data are used to provide estimate temperature decreases.
For PD blowers, the following formula is used if equipment information is not available:

$$T_2 - T_1 = \frac{T_1}{n_c}\left(\left(\frac{P_2}{P_1}\right)^{\frac{k-1}{k}} - 1\right)$$

P and T are temperature and pressures at upstream (1) and downstream (2) locations.
nc is the efficiency of the blower, calculated using flow conditions and manufacturer information
k is the ratio of constant pressure to constant volume heat capacity (1.4 for air)

Column K: This has the temperature from the previous line, plus any increase from column J.
Column L: Temperature is converted to absolute temperature (Kelvin).
Column M: This has the absolute pressure in Pascals from the previous line at the end of the calculation.
Column N: Pressure is converted to inches of water gauge.
Column O: Pressure is converted into inches of mercury gauge.
Column P: The amount of pressure increase required to meet desired discharge pressure is added here.
This manual entry can be interative until the outlet pressure at the bottom of the sheet matches the design output pressure at the top.
Column Q: Velocity (in feet per minute) is calculated by dividing flow by area.
Column R: Velocity is converted to meters per second.
Column S: Mass flow is calculated by multiplying flow by density (density is assumed constant for each section, and then verified).
Separate air densities are assumed for each leg, and before and after the system blower.
Mass flow should remain constant, but minor changes are a result of assuming density is constant, when in reality it is not.
Small changes in density within each leg are responsible for changes in overall mass flow between legs.
Per Environmental Engineering Reference Manual, on Page 17-9, if density changes are < 10%, this calculation is valid. See below.
Column T: Mass flow per unit area is calculated. The benefits of this approach is explained in Environmental Engineering Reference Manual, on Page 17-9.
Column U: Mass flow per unit area is converted into metric units.

Column V: Reynolds number is calculated:

$$\boxed{\mathrm{Re} = \frac{DG}{\mu} = \frac{DG}{\mu g_c}}$$

D = diameter of the pipe in inches (converted to feet)
G = mass per unit area in lbm / ft2 min
u = absolute viscosity of air at 55 deg F
gc = English units conversion factor (32.2 ft*lbm)/(lbf*s^2).

Column W: Moody friction factor is calculated using the Swamee-Jain Approximation:

$$f = \frac{0.25}{[log_{10}(\frac{\epsilon}{3.7D} + \frac{5.74}{Re^{0.9}})]^2}$$

where $f$ is a function of:

- Roughness height, ε (m, ft)
- Pipe diameter, $D$ (m, ft)
- Reynolds number, $Re$ (unitless).

http://en.wikipedia.org/wiki/Darcy_friction_factor_formulae#Swamee-Jain_equation

Column X: Fitting losses are calculated using the fitting loss coefficients (Column H) and multiplying by the velocity pressure. Velocity pressure is calculated as:
VP = (Density x Velocity^2) / 2
Some loss coefficients use upstream conditions, and some use downstream conditions. Deviations from standard formulas are marked with comments.

Column Y: Special losses, from flow through media or valves, are calculated here. This includes the following:
Tees: branch coefficients are taken from Environmental Engineering Reference Manual, on Page 36-16 and -17, and used similarly as in Column W.

Column Z: Losses due to pipe length are calculated. Standard losses for this piping where not found, so these we recalculated as follows form Equation 17.36 in Environmental Engineering Reference Manual.

$$\boxed{P_{in}^2 - P_{out}^2 = \left(\frac{fLG^2RT}{D(MW)g_c}\right)}$$

P = pressure at location noted
f = Moody friction factor
L = Length of pipe
G = Mass flow per unit area
R = universal gas constant
T = absolute temperature
D = pipe diameter
MW = molecular weight of air
gc = English units conversion factor (32.2 ft*lbm)/(lbf*s^2).

The above equation is solved for Pout, and then subtracted from Pin to determine the pressure drop due to pipe length.

Column AA: Downstream pressure is calculated using the formula immediately above, and subtracting losses from columns W and X.

Column AB a Pressure is converted into different units.

Column AD: Total pressure drop is calculated.

Column AE: Relative pressure change is calculated. If pressure change is less than 10%, assumption of incompressible (constant density) flow is OK.
Note: this calculation is not performed on lines with positive displacement (PD) blowers or liquid ring pump (LRP) blowers, as density change will be greater than 10%.
In those cases, the pressure is added with no loss calculation, and the row is left partially empty.

5. This process carries down the sheet through all the piping to the endpoint of the calculation (i.e. the point of discharge).
Anywhere flow is combined, flow-weighted averages of temperature and other parameters are calculated, but minimum pressure from all branches is used.

**Omega OU1 (On Site Soils)**
**Full Scale OSS Design**
**Pressure Drop Calculations Summary**

Performed by NLS Date 5/13/2013
Checked by JTB Date 5/14/2013

Black cells are text or formula results
Blue cells are data-entry parameters
Red cells are critical results or assumptions.

**Purpose**: balance flows into the plant

Assumption:
Isothermal, change in pressure is less than 10%
No density effects from heating of vapor by fans
No effects from moisture in air (heavier air, more friction etc)
Given only one SVE performance data set exists for each area, all future wells are assumed to perform in the same manner

**Constants**

| | | | |
|---|---|---|---|
| Absolute visocity | **3.82E-07** | lbf s / ft2 at 68 deg F | |
| | 1.82903E-05 | Pa s | |
| Absolute visocity | **5.02E-07** | lbf s / ft2 at 318 deg C | |
| | 2.40359E-05 | Pa s | |
| Specific Roughness | **0.0001** | ft | per ASHRAE for PVC |
| | 0.00003048 | m | |
| MW of air (MW) | **28.9** | g / mol | |
| Gas Constant (R) | 8.31E+03 | m3 Pa / K mol | |
| Gamma | **1.4** | Ratio of constant pressure to constant volume heat capacity | |

| | | ISVE1 | | | | | | | | | | | | ISVE2 | | | | | | | | | | |
|---|---|---|---|---|---|---|---|---|---|---|---|---|---|---|---|---|---|---|---|---|---|---|---|---|
| **Well ID** | | **VE-1S** | **VE-5S** | **VE-6S** | **VE-8S** | **VE-8SA** | **VE-9S** | **VE-10S** | **VE-11S** | **VE-11SA** | **VE-12S** | **VE-14S** | **VE-15S** | **VE-20S** | **VE-21S** | **VE-22S** | **VE-23S** | **VE-24S** | **VE-25S** | **VE-26S** | **VE-27S** | **VE-28S** | **VE-29S** | **VE-30S** |
| Max Flow | scfm | 10 | 125 | 100 | 75 | 75 | 10 | 40 | 45 | 45 | 30 | 35 | 90 | 0 | 0 | 0 | 0 | 0 | 0 | 0 | 0 | 0 | 0 | 0 |
| | acfm | 13 | 163 | 129 | 88 | 88 | 13 | 54 | 56 | 56 | 40 | 47 | 121 | 0 | 0 | 0 | 0 | 0 | 0 | 0 | 0 | 0 | 0 | 0 |
| Temperature | F | 68 | 68 | 68 | 68 | 68 | 68 | 68 | 68 | 69 | 68 | 68 | 68 | 68 | 68 | 68 | 68 | 68 | 68 | 68 | 68 | 68 | 68 | 68 |
| | K | 293 | 293 | 293 | 293 | 293 | 293 | 293 | 293 | 294 | 293 | 293 | 293 | 293 | 293 | 293 | 293 | 293 | 293 | 293 | 293 | 293 | 293 | 293 |
| Upstream Vaccum | inches Hg (gauge) | -5.5 | -5.2 | -5.0 | -2.5 | -2.5 | -6.0 | -6.0 | -4.0 | -4.0 | -6.0 | -6.0 | -6.0 | 0.0 | 0.0 | 0.0 | 0.0 | 0.0 | 0.0 | 0.0 | 0.0 | 0.0 | 0.0 | 0.0 |
| | inches Hg (absolute) | 24 | 25 | 25 | 27 | 27 | 24 | 24 | 26 | 26 | 24 | 24 | 24 | 30 | 30 | 30 | 30 | 30 | 30 | 30 | 30 | 30 | 30 | 30 |
| Pressure | psia (absolute) | 12 | 12 | 12 | 13 | 13 | 12 | 12 | 13 | 13 | 12 | 12 | 12 | 15 | 15 | 15 | 15 | 15 | 15 | 15 | 15 | 15 | 15 | 15 |
| | atm (absolute) | 0.8 | 0.8 | 0.8 | 0.9 | 0.9 | 0.8 | 0.8 | 0.9 | 0.9 | 0.8 | 0.8 | 0.8 | 1.0 | 1.0 | 1.0 | 1.0 | 1.0 | 1.0 | 1.0 | 1.0 | 1.0 | 1.0 | 1.0 |
| | Pa (absolute) | 82691 | 83707 | 84384 | 92849 | 92849 | 80998 | 80998 | 87770 | 87770 | 80998 | 80998 | 80998 | 101314 | 101314 | 101314 | 101314 | 101314 | 101314 | 101314 | 101314 | 101314 | 101314 | 101314 |
| | in WG (gauge) | -75.0 | -70.9 | -68.2 | -34.1 | -34.1 | -81.8 | -81.8 | -54.6 | -54.6 | -81.8 | -81.8 | -81.8 | -0.1 | -0.1 | -0.1 | -0.1 | -0.1 | -0.1 | -0.1 | -0.1 | -0.1 | -0.1 | -0.1 |
| Molar Volume | m3/mol | 0.029 | 0.029 | 0.029 | 0.026 | 0.026 | 0.030 | 0.030 | 0.028 | 0.028 | 0.030 | 0.030 | 0.030 | 0.024 | 0.024 | 0.024 | 0.024 | 0.024 | 0.024 | 0.024 | 0.024 | 0.024 | 0.024 | 0.024 |
| | mol/m3 | 33.9 | 34.3 | 34.6 | 38.1 | 38.1 | 33.2 | 33.2 | 36.0 | 35.9 | 33.2 | 33.2 | 33.2 | 41.6 | 41.6 | 41.6 | 41.6 | 41.6 | 41.6 | 41.6 | 41.6 | 41.6 | 41.6 | 41.6 |
| Air Density | g/m3 | 980.3 | 992.3 | 1000.3 | 1100.7 | 1100.7 | 960.2 | 960.2 | 1040.5 | 1038.5 | 960.2 | 960.2 | 960.2 | 1201.0 | 1201.0 | 1201.0 | 1201.0 | 1201.0 | 1201.0 | 1201.0 | 1201.0 | 1201.0 | 1201.0 | 1201.0 |
| | kg/m3 | 0.98 | 0.99 | 1.00 | 1.10 | 1.10 | 0.96 | 0.96 | 1.04 | 1.04 | 0.96 | 0.96 | 0.96 | 1.20 | 1.20 | 1.20 | 1.20 | 1.20 | 1.20 | 1.20 | 1.20 | 1.20 | 1.20 | 1.20 |
| | lb/scf | 0.06 | 0.06 | 0.06 | 0.07 | 0.07 | 0.06 | 0.06 | 0.06 | 0.06 | 0.06 | 0.06 | 0.06 | 0.07 | 0.07 | 0.07 | 0.07 | 0.07 | 0.07 | 0.07 | 0.07 | 0.07 | 0.07 | 0.07 |
| Pipe Size Selected | in | 2 | 2 | 3 | 2 | 2 | 2 | 2 | 2 | 2 | 2 | 3 | 3 | | | | | | | | | | | |
| Downstream Pressure | inches Hg (gauge) | -5.6 | -5.7 | -6.0 | -4.1 | -4.1 | -6.1 | -6.7 | -5.2 | -5.2 | -6.7 | -6.2 | -6.7 | | | | | | | | | | | |
| Percent Through Each Treatment Train | | | | | | | | | | | | | | | | | | | | | | | | |
| Blower Sizing | in WG (differential pressure) | - | - | - | - | - | - | - | - | - | - | - | - | - | - | - | - | - | - | - | - | - | - | - |
| | inches Hg (differential pressure) | - | - | - | - | - | - | - | - | - | - | - | - | - | - | - | - | - | - | - | - | - | - | - |
| Design Outlet Pressure | in WG | - | - | - | - | - | - | - | - | - | - | - | - | - | - | - | - | - | - | - | - | - | - | - |

**Omega OU1 (On Site Soils)**
**Full Scale OSS Design**
**Pressure Drop Calculations Summary**

**Purpose**: balance flows into the plant

Performed by JTB Date 10/9/2012
Checked by NLS Date 10/13/2012

Black cells are text or formula results
Blue cells are data-entry parameters
Red cells are critical results or assumptions.

| | | New Wells | | | | | | | | | | | | | | | | | | | | | | | | Treatment System | | | |
|---|---|---|---|---|---|---|---|---|---|---|---|---|---|---|---|---|---|---|---|---|---|---|---|---|---|---|---|---|---|
| **Well ID** | | **VE-31S** | **VE-32S** | **VE-33S** | **VE-34S** | **VE-35S** | **VE-36S** | **VE-37S** | **VE-38S** | **VE-39S** | **VE-40S** | **VE-2D** | **VE-2DA** | **VE-2DB** | **DPE-3** | **DPE-4** | **DPE-5** | **VE-6D** | **VE-7D** | **DPE-8** | **DPE-9** | **VE-10D** | **VE-11D** | **VE-12D** | **VE-13D** | **Leaving Manifold** | **Entering Train** | **Entering Blower** | **After Blower** |
| Max Flow | scfm | 0 | 0 | 0 | 0 | 0 | 0 | 0 | 0 | 0 | 0 | 33 | 33 | 33 | 100 | 100 | 100 | 0 | 0 | 100 | 100 | 0 | 0 | 0 | 0 | **1280** | **1280** | **1280** | **1280** |
| | acfm | 0 | 0 | 0 | 0 | 0 | 0 | 0 | 0 | 0 | 0 | 47 | 47 | 47 | 140 | 140 | 140 | 0 | 0 | 140 | 140 | 0 | 0 | 0 | 0 | 1834 | 1834 | 1834 | 1956 |
| Temperature | F | 68 | 68 | 68 | 68 | 68 | 68 | 68 | 68 | 68 | 68 | 68 | 68 | 68 | 68 | 68 | 68 | 68 | 68 | 68 | 68 | 68 | 68 | 68 | 68 | 68.03516 | 68.035159 | 68.03516 | 103 |
| | K | 293 | 293 | 293 | 293 | 293 | 293 | 293 | 293 | 293 | 293 | 293 | 293 | 293 | 293 | 293 | 293 | 293 | 293 | 293 | 293 | 293 | 293 | 293 | 293 | 293 | 293 | 293 | 313 |
| Upstream Vaccum | inches Hg (gauge) | 0 | 0 | 0 | 0 | 0 | 0 | 0 | 0 | 0 | 0 | -7 | -7 | -7 | -7 | -7 | -7 | 0 | 0 | -7 | -7 | 0 | 0 | 0 | 0 | -7.5 | -7.5 | -7.5 | -7.5 |
| | inches Hg (absolute) | 30 | 30 | 30 | 30 | 30 | 30 | 30 | 30 | 30 | 30 | 23 | 23 | 23 | 23 | 23 | 23 | 30 | 30 | 23 | 23 | 30 | 30 | 30 | 30 | 22 | 22 | 22 | 22 |
| Pressure | psia (absolute) | 15 | 15 | 15 | 15 | 15 | 15 | 15 | 15 | 15 | 15 | 11 | 11 | 11 | 11 | 11 | 11 | 15 | 15 | 11 | 11 | 15 | 15 | 15 | 15 | 11 | 11 | 11 | 11 |
| | atm (absolute) | 1.0 | 1.0 | 1.0 | 1.0 | 1.0 | 1.0 | 1.0 | 1.0 | 1.0 | 1.0 | 0.8 | 0.8 | 0.8 | 0.8 | 0.8 | 0.8 | 1.0 | 1.0 | 0.8 | 0.8 | 1.0 | 1.0 | 1.0 | 1.0 | 0.7 | 0.7 | 0.7 | 0.7 |
| | Pa (absolute) | 101314 | 101314 | 101314 | 101314 | 101314 | 101314 | 101314 | 101314 | 101314 | 101314 | 77612 | 77612 | 77612 | 77612 | 77612 | 77612 | 101314 | 101314 | 77612 | 77612 | 101314 | 101314 | 101314 | 101314 | 75932 | 75932 | 75932 | 75932 |
| | in WG (gauge) | -0.1 | -0.1 | -0.1 | -0.1 | -0.1 | -0.1 | -0.1 | -0.1 | -0.1 | -0.1 | -95.4 | -95.4 | -95.4 | -95.4 | -95.4 | -95.4 | -0.1 | -0.1 | -95.4 | -95.4 | -0.1 | -0.1 | -0.1 | -0.1 | -102.2 | -102.2 | -102.2 | -102.2 |
| Molar Volume | m3/mol | 0.024 | 0.024 | 0.024 | 0.024 | 0.024 | 0.024 | 0.024 | 0.024 | 0.024 | 0.024 | 0.031 | 0.031 | 0.031 | 0.031 | 0.031 | 0.031 | 0.024 | 0.024 | 0.031 | 0.031 | 0.024 | 0.024 | 0.024 | 0.024 | 0.032 | 0.032 | 0.032 | 0.034 |
| | mol/m3 | 41.6 | 41.6 | 41.6 | 41.6 | 41.6 | 41.6 | 41.6 | 41.6 | 41.6 | 41.6 | 31.8 | 31.8 | 31.8 | 31.8 | 31.8 | 31.8 | 41.6 | 41.6 | 31.8 | 31.8 | 41.6 | 41.6 | 41.6 | 41.6 | 31.1 | 31.1 | 31.1 | 29.2 |
| Air Density | g/m3 | 1201.0 | 1201.0 | 1201.0 | 1201.0 | 1201.0 | 1201.0 | 1201.0 | 1201.0 | 1201.0 | 1201.0 | 920.1 | 920.1 | 920.1 | 920.1 | 920.1 | 920.1 | 1201.0 | 1201.0 | 920.1 | 920.1 | 1201.0 | 1201.0 | 1201.0 | 1201.0 | 900.1 | 900.1 | 900.1 | 844.1 |
| | kg/m3 | 1.20 | 1.20 | 1.20 | 1.20 | 1.20 | 1.20 | 1.20 | 1.20 | 1.20 | 1.20 | 0.92 | 0.92 | 0.92 | 0.92 | 0.92 | 0.92 | 1.20 | 1.20 | 0.92 | 0.92 | 1.20 | 1.20 | 1.20 | 1.20 | 0.90 | 0.90 | 0.90 | 0.84 |
| | lb/scf | 0.07 | 0.07 | 0.07 | 0.07 | 0.07 | 0.07 | 0.07 | 0.07 | 0.07 | 0.07 | 0.06 | 0.06 | 0.06 | 0.06 | 0.06 | 0.06 | 0.07 | 0.07 | 0.06 | 0.06 | 0.07 | 0.07 | 0.07 | 0.07 | 0.06 | 0.06 | 0.06 | 0.05 |
| Pipe Size Selected | in | | | | | | | | | | | 2 | 2 | 2 | 4 | 4 | 4 | | | 4 | 4 | | | | | | See System Tab | | |
| Downstream Pressure | inches Hg (gauge) | | | | | | | | | | | -7.5 | -7.5 | -7.5 | -7.2 | -7.2 | -7.2 | | | -7.1 | -7.3 | | | | | - | - | - | - |
| Percent Through Each Treatment Train | | | | | | | | | | | | | | | | | | | | | | | | | | - | 100% | - | - |
| Blower Sizing | in WG (differential pressure) | - | - | - | - | - | - | - | - | | | - | - | - | - | - | - | - | - | - | - | - | - | - | - | - | - | 163 | - |
| | inches Hg (differential pressure) | - | - | - | - | - | - | - | - | | | - | - | - | - | - | - | - | - | - | - | - | - | - | - | - | - | **12.0** | - |
| Design Outlet Pressure | in WG | - | - | - | - | - | - | - | - | | | - | - | - | - | - | - | - | - | - | - | - | - | - | - | - | - | - | **13.2** |

**Omega OU1 (On Site Soils)**
**Full Scale OSS Design**
**Pressure Drop Calculations Summary**

Performed by NLS Date 5/13/2013
Checked by JTB Date 7/11/2013

**Purpose**: Size pipe and blower for Plant 1

Assumption:
Isothermal, change in pressure is less than 10%
No density effects from heating of vapor by fans
No effects from moisture in air (heavier air, more friction etc)
Given only one SVE performance data set exists for each area, all future wells are assumed to perform in the same manner

| | | |
|---|---|---|
| ACFM through Blower | 1834 | |
| Blower Added Static Pressure | **163** | (in WG) (Blower differential Pressure) |
| Air Horsepower | 46.96 | hp |
| Selected Blower brake horsepower | **60** | hp (out of 60 hp total available via VFD) |
| Efficiency | 78% | |
| Heat Exchanger Temp Reduction | **-80** | degrees F |
| Pipe Size Selected | **8** | inches |
| Pressure Leaving Stack | **13.2** | in WG |

| Column | (C) | (D) | (E) | (F) | (G) | (H) | (I) | | (J) | (K) | (L) | (M) | (N) | (O) | (P) | (Q) | (R) | (S) | (T) | (U) | (V) | (W) | (X) | (Y) | (Z) | (AA) | (AB) | (AC) | (AD) | (AE) |
|---|---|---|---|---|---|---|---|---|---|---|---|---|---|---|---|---|---|---|---|---|---|---|---|---|---|---|---|---|---|---|
| Item | Pipe ID | | Area A | Length L | | Fitting Loss Coeff K | Flow | | dT (Fan) | Inlet Temperature | | Upstream Pressure | | | Added Static Pressure | Velocity | | Mass Flow | Mass Flow / Area G | | Re | f | Fitting Loss | Equipment Static Loss | Length Losses | Downstream Pressure | | Drop | Pressure Change |
| | (in) | (m) | (m2) | (ft) | (m) | | (acfm) | (scfm) | (deg F) | (deg F) | (K) | (Pa) | (in WG) | (in Hg, gauge) | (in WG) | (fpm) | (m/s) | (lbm / min) | (lbm / ft2 min) | (kg / m2 sec) | | | (Pa) | (Pa) | (Pa) | (Pa) | $P_{out}$ (psi) | (in WG) | (in WG) | |
| ***From Manifold to Stack*** | | | | | | | | | | | | | | | | | | | | | | | | | | | | | | |
| Piping | **8** | 0.2 | 0.03 | **10** | 3.0 | | 1834 | 1280 | | 68 | 293.17 | 75932 | -102 | -7 | | 5255 | 27 | 103.08 | 295 | 24.0 | 266738 | 0.016 | 0 | | 78 | 75854 | -3.70 | -102 | 0.3 | 0% |
| Standard Elbow 90° | **8** | 0.2 | 0.03 | **3** | 0.9 | 0.42 | 1834 | 1279 | | 68 | 293.17 | 75854 | -102 | -8 | | 5255 | 27 | 103.08 | 295 | 24.0 | 266738 | 0.016 | 135 | | 23 | 75696 | -3.72 | -103 | 0.6 | 0% |
| Standard Elbow 90° | **8** | 0.2 | 0.03 | **3** | 0.9 | 0.42 | 1834 | 1276 | | 68 | 293.17 | 75696 | -103 | -8 | | 5255 | 27 | 103.08 | 295 | 24.0 | 266738 | 0.016 | 135 | | 23 | 75538 | -3.74 | -104 | 0.6 | 0% |
| **<ONTO SVE EXTRACTION SKID>** | | | | | | | | | | | | | | | | | | | | | | | | | | | | | | |
| Pipe | **8** | 0.2 | 0.03 | **3** | 0.9 | | 1834 | 1273 | | 68 | 293.17 | 75538 | -104 | -8 | | 5255 | 27 | 103.08 | 295 | 24.0 | 266738 | 0.016 | 0 | | 23 | 75515 | -3.75 | -104 | 0.1 | 0% |
| Standard Elbow 90° | **8** | 0.2 | 0.03 | **1** | 0.3 | 0.42 | 1834 | 1273 | | 68 | 293.17 | 75515 | -104 | -8 | | 5255 | 27 | 103.08 | 295 | 24.0 | 266738 | 0.016 | 135 | | 8 | 75372 | -3.77 | -104 | 0.6 | 0% |
| Pipe | **8** | 0.2 | 0.03 | **10** | 3.0 | | 1834 | 1271 | | 68 | 293.17 | 75372 | -104 | -8 | | 5255 | 27 | 103.08 | 295 | 24.0 | 266738 | 0.016 | 0 | | 78 | 75294 | -3.78 | -105 | 0.3 | 0% |
| Abrupt Expansion | **16** | 0.4 | 0.13 | **1** | 0.3 | 0.563 | 1834 | 1269 | | 68 | 293.17 | 75294 | -105 | -8 | | 1314 | 7 | 103.08 | 74 | 6.0 | 133369 | 0.017 | 11 | | 0 | 75282 | -3.78 | -105 | 0.0 | 0% |
| KO Tank | **16** | 0.4 | 0.13 | **10** | 3.0 | | 1834 | 1269 | | 68 | 293.17 | 75282 | -105 | -8 | | 1314 | 7 | 103.08 | 74 | 6.0 | 133369 | 0.017 | 0 | | 3 | 75280 | -3.78 | -105 | 0.0 | 0% |
| Abrupt Reduction | **8** | 0.2 | 0.03 | **1** | 0.3 | 0.375 | 1834 | 1269 | | 68 | 293.17 | 75280 | -105 | -8 | | 5255 | 27 | 103.08 | 295 | 24.0 | 266738 | 0.016 | 120 | | 8 | 75152 | -3.80 | -105 | 0.5 | 0% |
| Standard Elbow 90° | **8** | 0.2 | 0.03 | **1** | 0.3 | 0.42 | 1834 | 1267 | | 68 | 293.17 | 75152 | -105 | -8 | | 5255 | 27 | 103.08 | 295 | 24.0 | 266738 | 0.016 | 135 | | 8 | 75009 | -3.82 | -106 | 0.6 | 0% |
| Pipe | **8** | 0.2 | 0.03 | **6** | 1.8 | | 1834 | 1265 | | 68 | 293.17 | 75009 | -106 | -8 | | 5255 | 27 | 103.08 | 295 | 24.0 | 266738 | 0.016 | 0 | | 47 | 74962 | -3.83 | -106 | 0.2 | 0% |
| Standard Elbow 90° | **8** | 0.2 | 0.03 | **1** | 0.3 | 0.42 | 1834 | 1264 | | 68 | 293.17 | 74962 | -106 | -8 | | 5255 | 27 | 103.08 | 295 | 24.0 | 266738 | 0.016 | 135 | | 8 | 74819 | -3.85 | -107 | 0.6 | 0% |
| Abrupt Reduction | **6** | 0.2 | 0.02 | **1** | 0.3 | 0.219 | 1834 | 1261 | | 68 | 293.17 | 74819 | -107 | -8 | | 9343 | 47 | 103.08 | 525 | 42.7 | 355651 | 0.016 | 222 | | 33 | 74565 | -3.89 | -108 | 1.0 | 0% |
| Blower | **6** | 0.2 | 0.02 | **0** | 0.0 | | 1834 | 1257 | | 68 | 293.17 | 74565 | -108 | -8 | 153 | 9343 | 47 | 103.08 | 525 | 42.7 | 355651 | 0.016 | 0 | | 0 | 112675 | 1.64 | 46 | -153.2 | -51% |
| Abrupt Expansion | **8** | 0.2 | 0.03 | **1** | 0.3 | 0.191 | 1479 | 1257 | 115 | 183 | 357.06 | 112675 | 46 | 3 | | 4236 | 22 | 83.08 | 238 | 19.4 | 214986 | 0.017 | 40 | | 4 | 112631 | 1.64 | 45 | 0.2 | 0% |
| Silencer | **8** | 0.2 | 0.03 | **1** | 0.3 | | 1479 | 1257 | | 183 | 357.06 | 112631 | 45 | 3 | | 4236 | 22 | 83.08 | 238 | 19.4 | 214986 | 0.017 | 0 | 100 | 4 | 112527 | 1.62 | 45 | 0.4 | 0% |
| Standard Elbow 90° | **8** | 0.2 | 0.03 | **1** | 0.3 | 0.42 | 1479 | 1255 | | 183 | 357.06 | 112527 | 45 | 3 | | 4236 | 22 | 83.08 | 238 | 19.4 | 214986 | 0.017 | 88 | | 4 | 112435 | 1.61 | 45 | 0.4 | 0% |
| Standard Elbow 90° | **8** | 0.2 | 0.03 | **1** | 0.3 | 0.42 | 1479 | 1254 | | 183 | 357.06 | 112435 | 45 | 3 | | 4236 | 22 | 83.08 | 238 | 19.4 | 214986 | 0.017 | 88 | | 4 | 112343 | 1.59 | 44 | 0.4 | 0% |
| Pipe | **8** | 0.2 | 0.03 | **4** | 1.2 | | 1479 | 1253 | | 183 | 357.06 | 112343 | 44 | 3 | | 4236 | 22 | 83.08 | 238 | 19.4 | 214986 | 0.017 | 0 | | 17 | 112326 | 1.59 | 44 | 0.1 | 0% |
| Standard Elbow 90° | **8** | 0.2 | 0.03 | **1** | 0.3 | 0.42 | 1479 | 1253 | | 183 | 357.06 | 112326 | 44 | 3 | | 4236 | 22 | 83.08 | 238 | 19.4 | 214986 | 0.017 | 88 | | 4 | 112234 | 1.58 | 44 | 0.4 | 0% |
| Standard Elbow 90° | **8** | 0.2 | 0.03 | **1** | 0.3 | 0.42 | 1479 | 1252 | | 183 | 357.06 | 112234 | 44 | 3 | | 4236 | 22 | 83.08 | 238 | 19.4 | 214986 | 0.017 | 88 | | 4 | 112143 | 1.56 | 43 | 0.4 | 0% |
| Heat Exchanger | **8** | 0.2 | 0.03 | **1** | 0.3 | | 1296 | 1252 | -80 | 103 | 312.61 | 112143 | 43 | 3 | | 3711 | 19 | 72.80 | 209 | 17.0 | 188380 | 0.017 | 0 | 2482 | 3 | 109658 | 1.20 | 33 | 10.0 | 2% |
| Branch Tee | **8** | 0.2 | 0.03 | **1** | 0.3 | 0.84 | 1296 | 1224 | | 103 | 312.61 | 109658 | 33 | 2 | | 3711 | 19 | 72.80 | 209 | 17.0 | 188380 | 0.017 | 134 | | 3 | 109520 | 1.18 | 33 | 0.6 | 0% |
| Standard Elbow 90° | **8** | 0.2 | 0.03 | **1** | 0.3 | 0.42 | 1296 | 1223 | | 103 | 312.61 | 109520 | 33 | 2 | | 3711 | 19 | 72.80 | 209 | 17.0 | 188380 | 0.017 | 67 | | 3 | 109450 | 1.17 | 33 | 0.3 | 0% |
| **<OFF SVE EXTRACTION SKID>** | | | | | | | | | | | | | | | | | | | | | | | | | | | | | | |
| Pipe | **8** | 0.2 | 0.03 | **6** | 1.8 | | 1296 | 1222 | | 103 | 312.61 | 109450 | 33 | 2 | | 3711 | 19 | 72.80 | 209 | 17.0 | 188380 | 0.017 | 0 | | 18 | 109432 | 1.17 | 33 | 0.1 | 0% |
| Standard Elbow 90° | **8** | 0.2 | 0.03 | **1** | 0.3 | 0.42 | 1296 | 1222 | | 103 | 312.61 | 109432 | 33 | 2 | | 3711 | 19 | 72.80 | 209 | 17.0 | 188380 | 0.017 | 67 | | 3 | 109362 | 1.16 | 32 | 0.3 | 0% |
| Pipe | **8** | 0.2 | 0.03 | **11** | 3.4 | | 1296 | 1221 | | 103 | 312.61 | 109362 | 32 | 2 | | 3711 | 19 | 72.80 | 209 | 17.0 | 188380 | 0.017 | 0 | | 33 | 109329 | 1.16 | 32 | 0.1 | 0% |
| Standard Elbow 90° | **8** | 0.2 | 0.03 | **1** | 0.3 | 0.42 | 1296 | 1221 | | 103 | 312.61 | 109329 | 32 | 2 | | 3711 | 19 | 72.80 | 209 | 17.0 | 188380 | 0.017 | 67 | | 3 | 109259 | 1.15 | 32 | 0.3 | 0% |
| Pipe | **8** | 0.2 | 0.03 | **11** | 3.4 | | 1296 | 1220 | | 103 | 312.61 | 109259 | 32 | 2 | | 3711 | 19 | 72.80 | 209 | 17.0 | 188380 | 0.017 | 0 | | 33 | 109226 | 1.14 | 32 | 0.1 | 0% |
| Standard Elbow 45° | **8** | 0.2 | 0.03 | **1** | 0.3 | 0.22 | 1296 | 1220 | | 103 | 312.61 | 109226 | 32 | 2 | | 3711 | 19 | 72.80 | 209 | 17.0 | 188380 | 0.017 | 35 | | 3 | 109187 | 1.14 | 32 | 0.2 | 0% |
| Hose | **6** | 0.2 | 0.02 | **25** | 7.6 | | 1296 | 1219 | | 103 | 312.61 | 109187 | 32 | 2 | | 6598 | 34 | 72.80 | 371 | 30.2 | 251173 | 0.017 | 0 | | 312 | 108875 | 1.09 | 30 | 1.3 | 0% |
| GAC Vessel - 4000 pounds | **6** | 0.2 | 0.02 | **1** | 0.3 | | 1296 | 1216 | | 103 | 312.61 | 108875 | 30 | 2 | | 6598 | 34 | 72.80 | 371 | 30.2 | 251173 | 0.017 | 0 | 1244 | 13 | 107618 | 0.91 | 25 | 5.1 | 1% |
| Through Tee | **6** | 0.2 | 0.02 | **1** | 0.3 | 0.3 | 1296 | 1202 | | 103 | 312.61 | 107618 | 25 | 2 | | 6598 | 34 | 72.80 | 371 | 30.2 | 251173 | 0.017 | 152 | | 13 | 107454 | 0.88 | 25 | 0.7 | 0% |
| Standard Elbow 90° | **6** | 0.2 | 0.02 | **1** | 0.3 | 0.45 | 1296 | 1200 | | 103 | 312.61 | 107454 | 25 | 2 | | 6598 | 34 | 72.80 | 371 | 30.2 | 251173 | 0.017 | 228 | | 13 | 107214 | 0.85 | 24 | 1.0 | 0% |
| Hose | **6** | 0.2 | 0.02 | **25** | 7.6 | | 1296 | 1197 | | 103 | 312.61 | 107214 | 24 | 2 | | 6598 | 34 | 72.80 | 371 | 30.2 | 251173 | 0.017 | 0 | | 318 | 106896 | 0.80 | 22 | 1.3 | 0% |
| Standard Elbow 90° | **6** | 0.2 | 0.02 | **1** | 0.3 | 0.45 | 1296 | 1194 | | 103 | 312.61 | 106896 | 22 | 2 | | 6598 | 34 | 72.80 | 371 | 30.2 | 251173 | 0.017 | 228 | | 13 | 106655 | 0.77 | 21 | 1.0 | 0% |
| GAC Vessel - 4000 pounds | **6** | 0.2 | 0.02 | **1** | 0.3 | | 1296 | 1191 | | 103 | 312.61 | 106655 | 21 | 2 | | 6598 | 34 | 72.80 | 371 | 30.2 | 251173 | 0.017 | 0 | 1244 | 13 | 105399 | 0.59 | 16 | 5.1 | 1% |
| Hose | **6** | 0.2 | 0.02 | **25** | 7.6 | | 1296 | 1177 | | 103 | 312.61 | 105399 | 16 | 1 | | 6598 | 34 | 72.80 | 371 | 30.2 | 251173 | 0.017 | 0 | | 324 | 105075 | 0.54 | 15 | 1.3 | 0% |
| Pipe | **6** | 0.2 | 0.02 | **2** | 0.6 | | 1296 | 1173 | | 103 | 312.61 | 105075 | 15 | 1 | | 6598 | 34 | 72.80 | 371 | 30.2 | 251173 | 0.017 | 0 | | 26 | 105049 | 0.54 | 15 | 0.1 | 0% |
| Standard Elbow 90° | **6** | 0.2 | 0.02 | **1** | 0.3 | 0.45 | 1296 | 1173 | | 103 | 312.61 | 105049 | 15 | 1 | | 6598 | 34 | 72.80 | 371 | 30.2 | 251173 | 0.017 | 228 | | 13 | 104808 | 0.50 | 14 | 1.0 | 0% |
| Piping - Discharge Stack | **6** | 0.2 | 0.02 | **15** | 4.6 | | 1296 | 1170 | | 103 | 312.61 | 104808 | 14 | 1 | | 6598 | 34 | 72.80 | 371 | 30.2 | 251173 | 0.017 | 0 | | 195 | 104613 | 0.47 | 13 | 0.8 | 0% |

**Omega OU1 (On Site Soils)**
**Full Scale OSS Design**
**Pressure Drop Calculations Summary**

Performed by JTB Date 10/9/2012
Checked by NLS Date 10/13/2012

**Purpose**: size pipe for Well ID: VE-1S

Assumption:
Isothermal, change in pressure is less than 10%
No density effects from heating of vapor by fans
No effects from moisture in air (heavier air, more friction etc)
Given only one SVE performance data set exists for each area, all future wells are assumed to perform in the same manner.
All quantities and wells listed include spare capacity for additional wells.

Pipe Size Selected **2** inches
Pressure Entering Manifold **-5.6** in Hg

| Column | (C) | (D) | (E) | (F) | (G) | (H) | (I) | | (J) | (K) | (L) | (M) | (N) | (O) | (P) | (Q) | (R) | (S) | (T) | (U) | (V) | (W) | (X) | (Y) | (Z) | (AA) | (AB) | (AC) | (AD) | (AE) |
|---|---|---|---|---|---|---|---|---|---|---|---|---|---|---|---|---|---|---|---|---|---|---|---|---|---|---|---|---|---|---|
| Item | Pipe ID | | Area A | Length L | | Fitting Loss Coeff K | Flow | | dT (Fan) | Inlet Temperature | | Upstream Pressure | | | Added Static Pressure | Velocity | | Mass Flow | Mass Flow / Area G | | Re | f | Fitting Loss | Equipment Static Loss | Length Losses | Downstream Pressure $P_{out}$ | | | Drop | Pressure Change |
| | (in) | (m) | (m2) | (ft) | (m) | | (acfm) | (scfm) | (deg F) | (deg F) | (K) | (Pa) | (in WG) | (in Hg, gauge) | (in WG) | (fpm) | (m/s) | (lbm / min) | (lbm / ft2 min) | (kg / m2 sec) | | | (Pa) | (Pa) | (Pa) | (Pa) | (psi) | (in WG) | (in WG) | |
| ***From Well to Manifold*** | | | | | | | | | | | | | | | | | | | | | | | | | | | | | | |
| Branch Tee | **2** | 0.1 | 0.00 | **1** | 0.3 | 1.14 | 13 | 10 | | 68 | 293.15 | 82691 | -75.0 | -5.5 | | 603 | 3 | 0.81 | 37 | 3.0 | 8336 | 0.034 | 5 | | 1 | 82685 | -2.71 | -75 | 0.0 | 0% |
| Pipe | **2** | 0.1 | 0.00 | **12** | 3.7 | | 13 | 10 | | 68 | 293.15 | 82691 | -75.0 | -5.5 | | 603 | 3 | 0.81 | 37 | 3.0 | 8336 | 0.034 | 0 | | 11 | 82680 | -2.71 | -75 | 0.0 | 0% |
| Standard Elbow 90° | **2** | 0.1 | 0.00 | **1** | 0.3 | 0.57 | 13 | 10 | | 68 | 293.15 | 82680 | -75.0 | -5.5 | | 603 | 3 | 0.81 | 37 | 3.0 | 8336 | 0.034 | 3 | | 1 | 82676 | -2.71 | -75 | 0.0 | 0% |
| Pipe | **2** | 0.1 | 0.00 | **70** | 21.3 | | 13 | 10 | | 68 | 293.15 | 82676 | -75.1 | -5.5 | | 603 | 3 | 0.81 | 37 | 3.0 | 8336 | 0.034 | 0 | | 65 | 82611 | -2.72 | -75 | 0.3 | 0% |
| Standard Elbow 90° | **2** | 0.1 | 0.00 | **1** | 0.3 | 0.57 | 13 | 10 | | 68 | 293.15 | 82611 | -75.3 | -5.5 | | 603 | 3 | 0.81 | 37 | 3.0 | 8336 | 0.034 | 3 | | 1 | 82608 | -2.72 | -75 | 0.0 | 0% |
| Pipe (in plant) | **2** | 0.1 | 0.00 | **20** | 6.1 | | 13 | 10 | | 68 | 293.15 | 82608 | -75.3 | -5.5 | | 603 | 3 | 0.81 | 37 | 3.0 | 8336 | 0.034 | 0 | | 19 | 82589 | -2.72 | -75 | 0.1 | 0% |
| Through Tee | **2** | 0.1 | 0.00 | **1** | 0.3 | 0.38 | 13 | 10 | | 68 | 293.15 | 82589 | -75.4 | -5.5 | | 603 | 3 | 0.81 | 37 | 3.0 | 8336 | 0.034 | 2 | | 1 | 82587 | -2.72 | -75 | 0.0 | 0% |
| Flow Meter | **2** | 0.1 | 0.00 | **1** | 0.3 | **0.8** | 13 | 10 | | 68 | 293.15 | 82587 | -75.4 | -5.5 | | 603 | 3 | 0.81 | 37 | 3.0 | 8336 | 0.034 | 4 | | 1 | 82582 | -2.72 | -75 | 0.0 | 0% |
| Ball Valve | **2** | 0.1 | 0.00 | **1** | 0.3 | 0.06 | 13 | 10 | | 68 | 293.15 | 82582 | -75.4 | -5.5 | | 603 | 3 | 0.81 | 37 | 3.0 | 8336 | 0.034 | 0 | | 1 | 82581 | -2.72 | -75 | 0.0 | 0% |
| Combining Tee | **2** | 0.1 | 0.00 | **5** | 1.5 | | 13 | 10 | | 68 | 293.15 | 82581 | -75.4 | -5.5 | | 603 | 3 | 0.81 | 37 | 3.0 | 8336 | 0.034 | 0 | 100 | 5 | 82476 | -2.74 | -76 | 0.4 | 0% |

**Omega OU1 (On Site Soils)**
**Full Scale OSS Design**
**Pressure Drop Calculations Summary**

Performed by JTB Date 10/9/2012
Checked by NLS Date 10/13/2012

**Purpose**: size pipe for Well ID: VE-5S

Assumption:
Isothermal, change in pressure is less than 10%
No density effects from heating of vapor by fans
No effects from moisture in air (heavier air, more friction etc)
Given only one SVE performance data set exists for each area, all future wells are assumed to perform in the same manner
All quantities and wells listed include spare capacity for additional wells

Pipe Size Selected **2** inches
Pressure Entering Manifold **-5.7** in Hg

| Column | (C) | (D) | (E) | (F) | (G) | (H) | (I) | | (J) | (K) | (L) | (M) | (N) | (O) | (P) | (Q) | (R) | (S) | (T) | (U) | (V) | (W) | (X) | (Y) | (Z) | (AA) | (AB) | (AC) | (AD) | (AE) |
|---|---|---|---|---|---|---|---|---|---|---|---|---|---|---|---|---|---|---|---|---|---|---|---|---|---|---|---|---|---|---|
| Item | Pipe ID | | Area A | Length L | | Fitting Loss Coeff K | Flow | | dT (Fan) | Inlet Temperature | | Upstream Pressure | | | Added Static Pressure | Velocity | | Mass Flow | Mass Flow / Area G | | Re | f | Fitting Loss | Equipment Static Loss | Length Losses | Downstream Pressure | | $P_{out}$ | Drop | Pressure Change |
| | (in) | (m) | (m2) | (ft) | (m) | | (acfm) | (scfm) | (deg F) | (deg F) | (K) | (Pa) | (in WG) | (in Hg, gauge) | (in WG) | (fpm) | (m/s) | (lbm / min) | (lbm / ft2 min) | (kg / m2 sec) | | | (Pa) | (Pa) | (Pa) | (Pa) | (psi) | (in WG) | (in WG) | |
| ***From Well to Manifold*** | | | | | | | | | | | | | | | | | | | | | | | | | | | | | | |
| Branch Tee | 2 | 0.1 | 0.00 | 1 | 0.3 | 1.14 | 163 | 125 | | 68 | 293.15 | 83707 | -70.9 | -5.2 | | 7449 | 38 | 10.07 | 461 | 37.5 | 104203 | 0.021 | 810 | | 88 | 82808 | -2.69 | -75 | 3.6 | 1% |
| Pipe | 2 | 0.1 | 0.00 | 5 | 1.5 | | 163 | 125 | | 68 | 293.15 | 83707 | -70.9 | -5.2 | | 7449 | 38 | 10.07 | 461 | 37.5 | 104203 | 0.021 | 0 | | 443 | 83264 | -2.62 | -73 | 1.8 | 1% |
| Standard Elbow 90° | 2 | 0.1 | 0.00 | 1 | 0.3 | 0.57 | 163 | 125 | | 68 | 293.15 | 83707 | -70.9 | -5.2 | | 7449 | 38 | 10.07 | 461 | 37.5 | 104203 | 0.021 | 405 | | 88 | 83213 | -2.63 | -73 | 2.0 | 1% |
| Pipe (in plant) | 2 | 0.1 | 0.00 | 50 | 15.2 | | 163 | 125 | | 68 | 293.15 | 83707 | -70.9 | -5.2 | | 7449 | 38 | 10.07 | 461 | 37.5 | 104203 | 0.021 | 0 | | 4541 | 79165 | -3.22 | -89 | 18.3 | 5% |
| Standard Elbow 90° | 2 | 0.1 | 0.00 | 1 | 0.3 | 0.57 | 163 | 125 | | 68 | 293.15 | 83707 | -70.9 | -5.2 | | 7449 | 38 | 10.07 | 461 | 37.5 | 104203 | 0.021 | 405 | | 88 | 83213 | -2.63 | -73 | 2.0 | 1% |
| Pipe (in plant) | 2 | 0.1 | 0.00 | 20 | 6.1 | | 163 | 125 | | 68 | 293.15 | 83707 | -70.9 | -5.2 | | 7449 | 38 | 10.07 | 461 | 37.5 | 104203 | 0.021 | 0 | | 1786 | 81920 | -2.82 | -78 | 7.2 | 2% |
| Through Tee | 2 | 0.1 | 0.00 | 1 | 0.3 | 0.38 | 163 | 125 | | 68 | 293.15 | 83707 | -70.9 | -5.2 | | 7449 | 38 | 10.07 | 461 | 37.5 | 104203 | 0.021 | 270 | | 88 | 83348 | -2.61 | -72 | 1.4 | 0% |
| Flow Meter | 2 | 0.1 | 0.00 | 1 | 0.3 | 0.8 | 163 | 124 | | 68 | 293.15 | 83348 | -72.4 | -5.3 | | 7449 | 38 | 10.07 | 461 | 37.5 | 104203 | 0.021 | 568 | | 89 | 82691 | -2.71 | -75 | 2.6 | 1% |
| Ball Valve | 2 | 0.1 | 0.00 | 1 | 0.3 | 0.06 | 163 | 124 | | 68 | 293.15 | 82691 | -75.0 | -5.5 | | 7449 | 38 | 10.07 | 461 | 37.5 | 104203 | 0.021 | 43 | | 89 | 82559 | -2.73 | -76 | 0.5 | 0% |
| Combining Tee | 2 | 0.1 | 0.00 | 5 | 1.5 | | 163 | 123 | | 68 | 293.15 | 82559 | -75.5 | -5.5 | | 7449 | 38 | 10.07 | 461 | 37.5 | 104203 | 0.021 | 0 | 100 | 449 | 82010 | -2.81 | -78 | 2.2 | 1% |

**Omega OU1 (On Site Soils)**
**Full Scale OSS Design**
**Pressure Drop Calculations Summary**

Performed by JTB Date 10/9/2012
Checked by NLS Date 10/13/2012

**Purpose**: size pipe for Well ID: VE-6S

Assumption:
Isothermal, change in pressure is less than 10%
No density effects from heating of vapor by fans
No effects from moisture in air (heavier air, more friction etc)
Given only one SVE performance data set exists for each area, all future wells are assumed to perform in the same manner.
All quantities and wells listed include spare capacity for additional wells.

Pipe Size Selected **3** inches
Pressure Entering Manifold **-6.0** in Hg

| Column | (C) | (D) | (E) | (F) | (G) | (H) | (I) | | (J) | (K) | (L) | (M) | (N) | (O) | (P) | (Q) | (R) | (S) | (T) | (U) | (V) | (W) | (X) | (Y) | (Z) | (AA) | (AB) | (AC) | (AD) | (AE) |
|---|---|---|---|---|---|---|---|---|---|---|---|---|---|---|---|---|---|---|---|---|---|---|---|---|---|---|---|---|---|---|
| Item | Pipe ID | | Area A | Length L | | Fitting Loss Coeff K | Flow | | dT (Fan) | Inlet Temperature | | Upstream Pressure | | | Added Static Pressure | Velocity | | Mass Flow | Mass Flow / Area G | | Re | f | Fitting Loss | Equipment Static Loss | Length Losses | Downstream Pressure $P_{out}$ | | | Drop | Pressure Change |
| | (in) | (m) | (m2) | (ft) | (m) | | (acfm) | (scfm) | (deg F) | (deg F) | (K) | (Pa) | (in WG) | (in Hg, gauge) | (in WG) | (fpm) | (m/s) | (lbm / min) | (lbm / ft2 min) | (kg / m2 sec) | | | (Pa) | (Pa) | (Pa) | (Pa) | (psi) | (in WG) | (in WG) | |
| ***From Well to Manifold*** | | | | | | | | | | | | | | | | | | | | | | | | | | | | | | |
| Branch Tee | 2 | 0.1 | 0.00 | 1 | 0.3 | 1.14 | 129 | 100 | | 68 | 293.15 | 84384 | -68.2 | -5.0 | | 5911 | 30 | 8.05 | 369 | 30.0 | 83362 | 0.021 | 514 | | 58 | 83812 | -2.54 | -70 | 2.3 | 1% |
| Abrupt Expansion | 3 | 0.1 | 0.00 | 1 | 0.3 | 0.36 | 129 | 99 | | 68 | 293.15 | 83812 | -70.5 | -5.2 | | 2627 | 13 | 8.05 | 164 | 13.4 | 55575 | 0.022 | 32 | | 8 | 83772 | -2.55 | -71 | 0.2 | 0% |
| Pipe | 3 | 0.1 | 0.00 | 135 | 41.1 | | 129 | 99 | | 68 | 293.15 | 83772 | -70.6 | -5.2 | | 2627 | 13 | 8.05 | 164 | 13.4 | 55575 | 0.022 | 0 | | 1066 | 82706 | -2.70 | -75 | 4.3 | 1% |
| Standard Elbow 45° | 3 | 0.1 | 0.00 | 1 | 0.3 | 0.29 | 129 | 98 | | 68 | 293.15 | 82706 | -74.9 | -5.5 | | 2627 | 13 | 8.05 | 164 | 13.4 | 55575 | 0.022 | 26 | | 8 | 82672 | -2.71 | -75 | 0.1 | 0% |
| Pipe | 3 | 0.1 | 0.00 | 57 | 17.4 | | 129 | 98 | | 68 | 293.15 | 82672 | -75.1 | -5.5 | | 2627 | 13 | 8.05 | 164 | 13.4 | 55575 | 0.022 | 0 | | 455 | 82217 | -2.78 | -77 | 1.8 | 1% |
| Standard Elbow 45° | 3 | 0.1 | 0.00 | 1 | 0.3 | 0.29 | 129 | 97 | | 68 | 293.15 | 82217 | -76.9 | -5.6 | | 2627 | 13 | 8.05 | 164 | 13.4 | 55575 | 0.022 | 26 | | 8 | 82183 | -2.78 | -77 | 0.1 | 0% |
| Pipe | 3 | 0.1 | 0.00 | 70 | 21.3 | | 129 | 97 | | 68 | 293.15 | 82183 | -77.0 | -5.7 | | 2627 | 13 | 8.05 | 164 | 13.4 | 55575 | 0.022 | 0 | | 562 | 81621 | -2.86 | -79 | 2.3 | 1% |
| Standard Elbow 90° | 3 | 0.1 | 0.00 | 1 | 0.3 | 0.54 | 129 | 97 | | 68 | 293.15 | 81621 | -79.3 | -5.8 | | 2627 | 13 | 8.05 | 164 | 13.4 | 55575 | 0.022 | 48 | | 8 | 81565 | -2.87 | -80 | 0.2 | 0% |
| Pipe (in plant) | 3 | 0.1 | 0.00 | 20 | 6.1 | | 129 | 97 | | 68 | 293.15 | 81565 | -79.5 | -5.8 | | 2627 | 13 | 8.05 | 164 | 13.4 | 55575 | 0.022 | 0 | | 161 | 81404 | -2.89 | -80 | 0.6 | 0% |
| Through Tee | 3 | 0.1 | 0.00 | 1 | 0.3 | 0.36 | 129 | 96 | | 68 | 293.15 | 81404 | -80.2 | -5.9 | | 2627 | 13 | 8.05 | 164 | 13.4 | 55575 | 0.022 | 32 | | 8 | 81364 | -2.90 | -80 | 0.2 | 0% |
| Flow Meter | 3 | 0.1 | 0.00 | 1 | 0.3 | 0.8 | 129 | 96 | | 68 | 293.15 | 81364 | -80.3 | -5.9 | | 2627 | 13 | 8.05 | 164 | 13.4 | 55575 | 0.022 | 71 | | 8 | 81284 | -2.91 | -81 | 0.3 | 0% |
| Ball Valve | 3 | 0.1 | 0.00 | 1 | 0.3 | 0.05 | 129 | 96 | | 68 | 293.15 | 81284 | -80.6 | -5.9 | | 2627 | 13 | 8.05 | 164 | 13.4 | 55575 | 0.022 | 4 | | 8 | 81272 | -2.91 | -81 | 0.1 | 0% |
| Combining Tee | 3 | 0.1 | 0.00 | 5 | 1.5 | | 129 | 96 | | 68 | 293.15 | 81272 | -80.7 | -5.9 | | 2627 | 13 | 8.05 | 164 | 13.4 | 55575 | 0.022 | 0 | 100 | 40 | 81131 | -2.93 | -81 | 0.6 | 0% |

**Omega OU1 (On Site Soils)**
**Full Scale OSS Design**
**Pressure Drop Calculations Summary**

Performed by JTB Date 10/9/2012
Checked by NLS Date 10/13/2012

**Purpose**: size pipe for Well ID: VE-8S

Assumption:
Isothermal, change in pressure is less than 10%
No density effects from heating of vapor by fans
No effects from moisture in air (heavier air, more friction etc)
Given only one SVE performance data set exists for each area, all future wells are assumed to perform in the same manner
All quantities and wells listed include spare capacity for additional wells

Pipe Size Selected **2** inches
Pressure Entering Manifold **-4.1** in Hg

| Column | (C) | (D) | (E) | (F) | (G) | (H) | (I) | | (J) | (K) | (L) | (M) | (N) | (O) | (P) | (Q) | (R) | (S) | (T) | (U) | (V) | (W) | (X) | (Y) | (Z) | (AA) | (AB) | (AC) | (AD) | (AE) |
|---|---|---|---|---|---|---|---|---|---|---|---|---|---|---|---|---|---|---|---|---|---|---|---|---|---|---|---|---|---|---|
| Item | Pipe ID | | Area A | Length L | | Fitting Loss Coeff K | Flow | | dT (Fan) | Inlet Temperature | | Upstream Pressure | | | Added Static Pressure | Velocity | | Mass Flow | Mass Flow / Area G | | Re | f | Fitting Loss | Equipment Static Loss | Length Losses | Downstream Pressure Drop | | $P_{out}$ | | Pressure Change |
| | (in) | (m) | (m2) | (ft) | (m) | | (acfm) | (scfm) | (deg F) | (deg F) | (K) | (Pa) | (in WG) | (in Hg, gauge) | (in WG) | (fpm) | (m/s) | (lbm / min) | (lbm / ft2 min) | (kg / m2 sec) | | | (Pa) | (Pa) | (Pa) | (Pa) | (psi) | (in WG) | (in WG) | |
| ***From Well to Manifold*** | | | | | | | | | | | | | | | | | | | | | | | | | | | | | | |
| Branch Tee | 2 | 0.1 | 0.00 | 1 | 0.3 | 1.14 | 88 | 75 | | 68 | 293.15 | 92849 | -34.1 | -2.5 | | 4029 | 20 | 6.04 | 277 | 22.5 | 62522 | 0.022 | 263 | | 31 | 92555 | -1.28 | -35 | 1.2 | 0% |
| Pipe | 2 | 0.1 | 0.00 | 5 | 1.5 | | 88 | 75 | | 68 | 293.15 | 92849 | -34.1 | -2.5 | | 4029 | 20 | 6.04 | 277 | 22.5 | 62522 | 0.022 | 0 | | 153 | 92695 | -1.26 | -35 | 0.6 | 0% |
| Standard Elbow 90° | 2 | 0.1 | 0.00 | 1 | 0.3 | 0.57 | 88 | 75 | | 68 | 293.15 | 92695 | -34.8 | -2.5 | | 4029 | 20 | 6.04 | 277 | 22.5 | 62522 | 0.022 | 131 | | 31 | 92533 | -1.28 | -35 | 0.7 | 0% |
| Pipe | 2 | 0.1 | 0.00 | 20 | 6.1 | | 88 | 75 | | 68 | 293.15 | 92533 | -35.4 | -2.6 | | 4029 | 20 | 6.04 | 277 | 22.5 | 62522 | 0.022 | 0 | | 618 | 91916 | -1.37 | -38 | 2.5 | 1% |
| Standard Elbow 45° | 2 | 0.1 | 0.00 | 1 | 0.3 | 0.3 | 88 | 74 | | 68 | 293.15 | 91916 | -37.9 | -2.8 | | 4029 | 20 | 6.04 | 277 | 22.5 | 62522 | 0.022 | 69 | | 31 | 91815 | -1.38 | -38 | 0.4 | 0% |
| Pipe | 2 | 0.1 | 0.00 | 90 | 27.4 | | 88 | 74 | | 68 | 293.15 | 91815 | -38.3 | -2.8 | | 4029 | 20 | 6.04 | 277 | 22.5 | 62522 | 0.022 | 0 | | 2836 | 88980 | -1.79 | -50 | 11.4 | 3% |
| Standard Elbow 90° | 2 | 0.1 | 0.00 | 1 | 0.3 | 0.57 | 88 | 72 | | 68 | 293.15 | 88980 | -49.7 | -3.6 | | 4029 | 20 | 6.04 | 277 | 22.5 | 62522 | 0.022 | 131 | | 32 | 88816 | -1.82 | -50 | 0.7 | 0% |
| Pipe (in plant) | 2 | 0.1 | 0.00 | 20 | 6.1 | | 88 | 72 | | 68 | 293.15 | 88816 | -50.4 | -3.7 | | 4029 | 20 | 6.04 | 277 | 22.5 | 62522 | 0.022 | 0 | | 644 | 88173 | -1.91 | -53 | 2.6 | 1% |
| Through Tee | 2 | 0.1 | 0.00 | 1 | 0.3 | 0.38 | 88 | 71 | | 68 | 293.15 | 88173 | -53.0 | -3.9 | | 4029 | 20 | 6.04 | 277 | 22.5 | 62522 | 0.022 | 88 | | 32 | 88053 | -1.93 | -53 | 0.5 | 0% |
| Flow Meter | 2 | 0.1 | 0.00 | 1 | 0.3 | 0.8 | 88 | 71 | | 68 | 293.15 | 88053 | -53.4 | -3.9 | | 4029 | 20 | 6.04 | 277 | 22.5 | 62522 | 0.022 | 184 | | 32 | 87836 | -1.96 | -54 | 0.9 | 0% |
| Ball Valve | 2 | 0.1 | 0.00 | 1 | 0.3 | 0.06 | 88 | 71 | | 68 | 293.15 | 87836 | -54.3 | -4.0 | | 4029 | 20 | 6.04 | 277 | 22.5 | 62522 | 0.022 | 14 | | 32 | 87790 | -1.97 | -54 | 0.2 | 0% |
| Combining Tee | 2 | 0.1 | 0.00 | 5 | 1.5 | | 88 | 71 | | 68 | 293.15 | 87790 | -54.5 | -4.0 | | 4029 | 20 | 6.04 | 277 | 22.5 | 62522 | 0.022 | 0 | 100 | 162 | 87527 | -2.01 | -56 | 1.1 | 0% |

**Omega OU1 (On Site Soils)**
**Full Scale OSS Design**
**Pressure Drop Calculations Summary**

Performed by JTB Date 10/9/2012
Checked by NLS Date 10/13/2012

**Purpose**: size pipe for Well ID: VE-8SA

Assumption:
Isothermal, change in pressure is less than 10%
No density effects from heating of vapor by fans
No effects from moisture in air (heavier air, more friction etc)
Given only one SVE performance data set exists for each area, all future wells are assumed to perform in the same manner
All quantities and wells listed include spare capacity for additional wells

Pipe Size Selected **2** inches
Pressure Entering Manifold **-4.1** in Hg

| Column | (C) | (D) | (E) | (F) | (G) | (H) | (I) | | (J) | (K) | (L) | (M) | (N) | (O) | (P) | (Q) | (R) | (S) | (T) | (U) | (V) | (W) | (X) | (Y) | (Z) | (AA) | (AB) | (AC) | (AD) | (AE) |
|---|---|---|---|---|---|---|---|---|---|---|---|---|---|---|---|---|---|---|---|---|---|---|---|---|---|---|---|---|---|---|
| Item | Pipe ID | | Area A | Length L | | Fitting Loss Coeff K | Flow | | dT (Fan) | Inlet Temperature | | Upstream Pressure | | | Added Static Pressure | Velocity | | Mass Flow | Mass Flow / Area G | | Re | f | Fitting Loss | Equipment Static Loss | Length Losses | Downstream Pressure | | Drop | Pressure Change |
| | (in) | (m) | (m2) | (ft) | (m) | | (acfm) | (scfm) | (deg F) | (deg F) | (K) | (Pa) | (in WG) | (in Hg, gauge) | (in WG) | (fpm) | (m/s) | (lbm / min) | (lbm / ft2 min) | (kg / m2 sec) | | | (Pa) | (Pa) | (Pa) | (Pa) | $P_{out}$ (psi) | (in WG) | (in WG) | |
| ***From Well to Manifold*** | | | | | | | | | | | | | | | | | | | | | | | | | | | | | | |
| Branch Tee | 2 | 0.1 | 0.00 | 1 | 0.3 | 1.14 | 88 | 75 | | 68 | 293.15 | 92849 | -34.1 | -2.5 | | 4029 | 20 | 6.04 | 277 | 22.5 | 62522 | 0.022 | 263 | | 31 | 92555 | -1.28 | -35 | 1.2 | 0% |
| Pipe | 2 | 0.1 | 0.00 | 5 | 1.5 | | 88 | 75 | | 68 | 293.15 | 92849 | -34.1 | -2.5 | | 4029 | 20 | 6.04 | 277 | 22.5 | 62522 | 0.022 | 0 | | 153 | 92695 | -1.26 | -35 | 0.6 | 0% |
| Standard Elbow 90° | 2 | 0.1 | 0.00 | 1 | 0.3 | 0.57 | 88 | 75 | | 68 | 293.15 | 92695 | -34.8 | -2.5 | | 4029 | 20 | 6.04 | 277 | 22.5 | 62522 | 0.022 | 131 | | 31 | 92533 | -1.28 | -35 | 0.7 | 0% |
| Pipe | 2 | 0.1 | 0.00 | 20 | 6.1 | | 88 | 75 | | 68 | 293.15 | 92533 | -35.4 | -2.6 | | 4029 | 20 | 6.04 | 277 | 22.5 | 62522 | 0.022 | 0 | | 618 | 91916 | -1.37 | -38 | 2.5 | 1% |
| Standard Elbow 45° | 2 | 0.1 | 0.00 | 1 | 0.3 | 0.3 | 88 | 74 | | 68 | 293.15 | 91916 | -37.9 | -2.8 | | 4029 | 20 | 6.04 | 277 | 22.5 | 62522 | 0.022 | 69 | | 31 | 91815 | -1.38 | -38 | 0.4 | 0% |
| Pipe | 2 | 0.1 | 0.00 | 90 | 27.4 | | 88 | 74 | | 68 | 293.15 | 91815 | -38.3 | -2.8 | | 4029 | 20 | 6.04 | 277 | 22.5 | 62522 | 0.022 | 0 | | 2836 | 88980 | -1.79 | -50 | 11.4 | 3% |
| Standard Elbow 90° | 2 | 0.1 | 0.00 | 1 | 0.3 | 0.57 | 88 | 72 | | 68 | 293.15 | 88980 | -49.7 | -3.6 | | 4029 | 20 | 6.04 | 277 | 22.5 | 62522 | 0.022 | 131 | | 32 | 88816 | -1.82 | -50 | 0.7 | 0% |
| Pipe (in plant) | 2 | 0.1 | 0.00 | 20 | 6.1 | | 88 | 72 | | 68 | 293.15 | 88816 | -50.4 | -3.7 | | 4029 | 20 | 6.04 | 277 | 22.5 | 62522 | 0.022 | 0 | | 644 | 88173 | -1.91 | -53 | 2.6 | 1% |
| Through Tee | 2 | 0.1 | 0.00 | 1 | 0.3 | 0.38 | 88 | 71 | | 68 | 293.15 | 88173 | -53.0 | -3.9 | | 4029 | 20 | 6.04 | 277 | 22.5 | 62522 | 0.022 | 88 | | 32 | 88053 | -1.93 | -53 | 0.5 | 0% |
| Flow Meter | 2 | 0.1 | 0.00 | 1 | 0.3 | 0.8 | 88 | 71 | | 68 | 293.15 | 88053 | -53.4 | -3.9 | | 4029 | 20 | 6.04 | 277 | 22.5 | 62522 | 0.022 | 184 | | 32 | 87836 | -1.96 | -54 | 0.9 | 0% |
| Ball Valve | 2 | 0.1 | 0.00 | 1 | 0.3 | 0.06 | 88 | 71 | | 68 | 293.15 | 87836 | -54.3 | -4.0 | | 4029 | 20 | 6.04 | 277 | 22.5 | 62522 | 0.022 | 14 | | 32 | 87790 | -1.97 | -54 | 0.2 | 0% |
| Combining Tee | 2 | 0.1 | 0.00 | 5 | 1.5 | | 88 | 71 | | 68 | 293.15 | 87790 | -54.5 | -4.0 | | 4029 | 20 | 6.04 | 277 | 22.5 | 62522 | 0.022 | 0 | 100 | 162 | 87527 | -2.01 | -56 | 1.1 | 0% |

**Omega OU1 (On Site Soils)**
**Full Scale OSS Design**
**Pressure Drop Calculations Summary**

Performed by JTB Date 10/9/2012
Checked by NLS Date 10/13/2012

**Purpose**: size pipe for Well ID: VE-9S

Assumption:
Isothermal, change in pressure is less than 10%
No density effects from heating of vapor by fans
No effects from moisture in air (heavier air, more friction etc)
Given only one SVE performance data set exists for each area, all future wells are assumed to perform in the same manner.
All quantities and wells listed include spare capacity for additional wells.

Pipe Size Selected **2** inches
Pressure Entering Manifold **-6.1** in Hg

| Column | (C) | (D) | (E) | (F) | (G) | (H) | (I) | | (J) | (K) | (L) | (M) | (N) | (O) | (P) | (Q) | (R) | (S) | (T) | (U) | (V) | (W) | (X) | (Y) | (Z) | (AA) | (AB) | (AC) | (AD) | (AE) |
|---|---|---|---|---|---|---|---|---|---|---|---|---|---|---|---|---|---|---|---|---|---|---|---|---|---|---|---|---|---|---|
| Item | Pipe ID | | Area A | Length L | | Fitting Loss Coeff K | Flow | | dT (Fan) | Inlet Temperature | | Upstream Pressure | | | Added Static Pressure | Velocity | | Mass Flow | Mass Flow / Area G | | Re | f | Fitting Loss | Equipment Static Loss | Length Losses | Downstream Pressure $P_{out}$ | | | Drop | Pressure Change |
| | (in) | (m) | (m2) | (ft) | (m) | | (acfm) | (scfm) | (deg F) | (deg F) | (K) | (Pa) | (in WG) | (in Hg, gauge) | (in WG) | (fpm) | (m/s) | (lbm / min) | (lbm / ft2 min) | (kg / m2 sec) | | | (Pa) | (Pa) | (Pa) | (Pa) | (psi) | (in WG) | (in WG) | |
| ***From Well to Manifold*** | | | | | | | | | | | | | | | | | | | | | | | | | | | | | | |
| Branch Tee | 2 | 0.1 | 0.00 | 1 | 0.3 | 1.14 | 13 | 10 | | 68 | 293.15 | 80998 | -81.8 | -6.0 | | 616 | 3 | 0.81 | 37 | 3.0 | 8336 | 0.034 | 5 | | 1 | 80991 | -2.95 | -82 | 0.0 | 0% |
| Pipe | 2 | 0.1 | 0.00 | 50 | 15.2 | | 13 | 10 | | 68 | 293.15 | 80998 | -81.8 | -6.0 | | 616 | 3 | 0.81 | 37 | 3.0 | 8336 | 0.034 | 0 | | 47 | 80951 | -2.96 | -82 | 0.2 | 0% |
| Standard Elbow 90° | 2 | 0.1 | 0.00 | 1 | 0.3 | 0.57 | 13 | 10 | | 68 | 293.15 | 80951 | -82.0 | -6.0 | | 616 | 3 | 0.81 | 37 | 3.0 | 8336 | 0.034 | 3 | | 1 | 80947 | -2.96 | -82 | 0.0 | 0% |
| Pipe | 2 | 0.1 | 0.00 | 80 | 24.4 | | 13 | 10 | | 68 | 293.15 | 80947 | -82.0 | -6.0 | | 616 | 3 | 0.81 | 37 | 3.0 | 8336 | 0.034 | 0 | | 76 | 80871 | -2.97 | -82 | 0.3 | 0% |
| Standard Elbow 90° | 2 | 0.1 | 0.00 | 1 | 0.3 | 0.57 | 13 | 10 | | 68 | 293.15 | 80871 | -82.3 | -6.0 | | 616 | 3 | 0.81 | 37 | 3.0 | 8336 | 0.034 | 3 | | 1 | 80868 | -2.97 | -82 | 0.0 | 0% |
| Pipe | 2 | 0.1 | 0.00 | 5 | 1.5 | | 13 | 10 | | 68 | 293.15 | 80868 | -82.3 | -6.0 | | 616 | 3 | 0.81 | 37 | 3.0 | 8336 | 0.034 | 0 | | 5 | 80863 | -2.97 | -82 | 0.0 | 0% |
| Standard Elbow 90° | 2 | 0.1 | 0.00 | 1 | 0.3 | 0.57 | 13 | 10 | | 68 | 293.15 | 80863 | -82.3 | -6.0 | | 616 | 3 | 0.81 | 37 | 3.0 | 8336 | 0.034 | 3 | | 1 | 80859 | -2.97 | -82 | 0.0 | 0% |
| Pipe | 2 | 0.1 | 0.00 | 20 | 6.1 | | 13 | 10 | | 68 | 293.15 | 80859 | -82.4 | -6.0 | | 616 | 3 | 0.81 | 37 | 3.0 | 8336 | 0.034 | 0 | | 19 | 80840 | -2.98 | -82 | 0.1 | 0% |
| Through Tee | 2 | 0.1 | 0.00 | 1 | 0.3 | 0.38 | 13 | 10 | | 68 | 293.15 | 80840 | -82.4 | -6.0 | | 616 | 3 | 0.81 | 37 | 3.0 | 8336 | 0.034 | 2 | | 1 | 80838 | -2.98 | -82 | 0.0 | 0% |
| Flow Meter | 2 | 0.1 | 0.00 | 1 | 0.3 | 0.8 | 13 | 10 | | 68 | 293.15 | 80838 | -82.4 | -6.0 | | 616 | 3 | 0.81 | 37 | 3.0 | 8336 | 0.034 | 4 | | 1 | 80833 | -2.98 | -82 | 0.0 | 0% |
| Ball Valve | 2 | 0.1 | 0.00 | 1 | 0.3 | 0.06 | 13 | 10 | | 68 | 293.15 | 80833 | -82.5 | -6.1 | | 616 | 3 | 0.81 | 37 | 3.0 | 8336 | 0.034 | 0 | | 1 | 80832 | -2.98 | -82 | 0.0 | 0% |
| Combining Tee | 2 | 0.1 | 0.00 | 5 | 1.5 | | 13 | 10 | | 68 | 293.15 | 80832 | -82.5 | -6.1 | | 616 | 3 | 0.81 | 37 | 3.0 | 8336 | 0.034 | 0 | 100 | 5 | 80727 | -2.99 | -83 | 0.4 | 0% |

**Omega OU1 (On Site Soils)**
**Full Scale OSS Design**
**Pressure Drop Calculations Summary**

Performed by JTB Date 10/9/2012
Checked by NLS Date 10/13/2012

**Purpose**: size pipe for Well ID: VE-10S

Assumption:
Isothermal, change in pressure is less than 10%
No density effects from heating of vapor by fans
No effects from moisture in air (heavier air, more friction etc)
Given only one SVE performance data set exists for each area, all future wells are assumed to perform in the same manner.
All quantities and wells listed include spare capacity for additional wells.

Pipe Size Selected **2** inches
Pressure Entering Manifold **-6.7** in Hg

| Column | (C) | (D) | (E) | (F) | (G) | (H) | (I) | | (J) | (K) | (L) | (M) | (N) | (O) | (P) | (Q) | (R) | (S) | (T) | (U) | (V) | (W) | (X) | (Y) | (Z) | (AA) | (AB) | (AC) | (AD) | (AE) |
|---|---|---|---|---|---|---|---|---|---|---|---|---|---|---|---|---|---|---|---|---|---|---|---|---|---|---|---|---|---|---|
| Item | Pipe ID | | Area A | Length L | | Fitting Loss Coeff K | Flow | | dT (Fan) | Inlet Temperature | | Upstream Pressure | | | Added Static Pressure | Velocity | | Mass Flow | Mass Flow / Area G | | Re | f | Fitting Loss | Equipment Static Loss | Length Losses | Downstream Pressure $P_{out}$ | | | Drop | Pressure Change |
| | (in) | (m) | (m2) | (ft) | (m) | | (acfm) | (scfm) | (deg F) | (deg F) | (K) | (Pa) | (in WG) | (in Hg, gauge) | (in WG) | (fpm) | (m/s) | (lbm / min) | (lbm / ft2 min) | (kg / m2 sec) | | | (Pa) | (Pa) | (Pa) | (Pa) | (psi) | (in WG) | (in WG) | |
| ***From Well to Manifold*** | | | | | | | | | | | | | | | | | | | | | | | | | | | | | | |
| Branch Tee | 2 | 0.1 | 0.00 | 1 | 0.3 | 1.14 | 54 | 40 | | 68 | 293.15 | 80998 | -81.8 | -6.0 | | 2463 | 13 | 3.22 | 148 | 12.0 | 33345 | 0.025 | 86 | | 11 | 80901 | -2.97 | -82 | 0.4 | 0% |
| Pipe | 2 | 0.1 | 0.00 | 5 | 1.5 | | 54 | 40 | | 68 | 293.15 | 80998 | -81.8 | -6.0 | | 2463 | 13 | 3.22 | 148 | 12.0 | 33345 | 0.025 | 0 | | 56 | 80942 | -2.96 | -82 | 0.2 | 0% |
| Standard Elbow 90° | 2 | 0.1 | 0.00 | 1 | 0.3 | 0.57 | 54 | 40 | | 68 | 293.15 | 80942 | -82.0 | -6.0 | | 2463 | 13 | 3.22 | 148 | 12.0 | 33345 | 0.025 | 43 | | 11 | 80888 | -2.97 | -82 | 0.2 | 0% |
| Pipe | 2 | 0.1 | 0.00 | 5 | 1.5 | | 54 | 40 | | 68 | 293.15 | 80888 | -82.2 | -6.0 | | 2463 | 13 | 3.22 | 148 | 12.0 | 33345 | 0.025 | 0 | | 56 | 80833 | -2.98 | -82 | 0.2 | 0% |
| Standard Elbow 90° | 2 | 0.1 | 0.00 | 1 | 0.3 | 0.57 | 54 | 40 | | 68 | 293.15 | 80833 | -82.5 | -6.1 | | 2463 | 13 | 3.22 | 148 | 12.0 | 33345 | 0.025 | 43 | | 11 | 80779 | -2.98 | -83 | 0.2 | 0% |
| Pipe | 2 | 0.1 | 0.00 | 40 | 12.2 | | 54 | 40 | | 68 | 293.15 | 80779 | -82.7 | -6.1 | | 2463 | 13 | 3.22 | 148 | 12.0 | 33345 | 0.025 | 0 | | 446 | 80332 | -3.05 | -84 | 1.8 | 1% |
| Standard Elbow 90° | 2 | 0.1 | 0.00 | 1 | 0.3 | 0.57 | 54 | 40 | | 68 | 293.15 | 80332 | -84.5 | -6.2 | | 2463 | 13 | 3.22 | 148 | 12.0 | 33345 | 0.025 | 43 | | 11 | 80278 | -3.06 | -85 | 0.2 | 0% |
| Pipe | 2 | 0.1 | 0.00 | 80 | 24.4 | | 54 | 40 | | 68 | 293.15 | 80278 | -84.7 | -6.2 | | 2463 | 13 | 3.22 | 148 | 12.0 | 33345 | 0.025 | 0 | | 901 | 79377 | -3.19 | -88 | 3.6 | 1% |
| Standard Elbow 90° | 2 | 0.1 | 0.00 | 1 | 0.3 | 0.57 | 54 | 39 | | 68 | 293.15 | 79377 | -88.3 | -6.5 | | 2463 | 13 | 3.22 | 148 | 12.0 | 33345 | 0.025 | 43 | | 11 | 79323 | -3.20 | -89 | 0.2 | 0% |
| Pipe | 2 | 0.1 | 0.00 | 5 | 1.5 | | 54 | 39 | | 68 | 293.15 | 79323 | -88.5 | -6.5 | | 2463 | 13 | 3.22 | 148 | 12.0 | 33345 | 0.025 | 0 | | 57 | 79267 | -3.20 | -89 | 0.2 | 0% |
| Standard Elbow 90° | 2 | 0.1 | 0.00 | 1 | 0.3 | 0.57 | 54 | 39 | | 68 | 293.15 | 79267 | -88.8 | -6.5 | | 2463 | 13 | 3.22 | 148 | 12.0 | 33345 | 0.025 | 43 | | 11 | 79212 | -3.21 | -89 | 0.2 | 0% |
| Pipe | 2 | 0.1 | 0.00 | 20 | 6.1 | | 54 | 39 | | 68 | 293.15 | 79212 | -89.0 | -6.5 | | 2463 | 13 | 3.22 | 148 | 12.0 | 33345 | 0.025 | 0 | | 227 | 78985 | -3.24 | -90 | 0.9 | 0% |
| Through Tee | 2 | 0.1 | 0.00 | 1 | 0.3 | 0.38 | 54 | 39 | | 68 | 293.15 | 78985 | -89.9 | -6.6 | | 2463 | 13 | 3.22 | 148 | 12.0 | 33345 | 0.025 | 29 | | 11 | 78945 | -3.25 | -90 | 0.2 | 0% |
| Flow Meter | 2 | 0.1 | 0.00 | 1 | 0.3 | 0.8 | 54 | 39 | | 68 | 293.15 | 78945 | -90.1 | -6.6 | | 2463 | 13 | 3.22 | 148 | 12.0 | 33345 | 0.025 | 60 | | 11 | 78874 | -3.26 | -90 | 0.3 | 0% |
| Ball Valve | 2 | 0.1 | 0.00 | 1 | 0.3 | 0.06 | 54 | 39 | | 68 | 293.15 | 78874 | -90.3 | -6.6 | | 2463 | 13 | 3.22 | 148 | 12.0 | 33345 | 0.025 | 5 | | 11 | 78858 | -3.26 | -90 | 0.1 | 0% |
| Combining Tee | 2 | 0.1 | 0.00 | 5 | 1.5 | | 54 | 39 | | 68 | 293.15 | 78858 | -90.4 | -6.6 | | 2463 | 13 | 3.22 | 148 | 12.0 | 33345 | 0.025 | 0 | 100 | 57 | 78701 | -3.29 | -91 | 0.6 | 0% |

**Omega OU1 (On Site Soils)**
**Full Scale OSS Design**
**Pressure Drop Calculations Summary**

Performed by JTB Date 10/9/2012
Checked by NLS Date 10/13/2012

**Purpose**: size pipe for Well ID: VE-11S

Assumption:
Isothermal, change in pressure is less than 10%
No density effects from heating of vapor by fans
No effects from moisture in air (heavier air, more friction etc)
Given only one SVE performance data set exists for each area, all future wells are assumed to perform in the same manner
All quantities and wells listed include spare capacity for additional wells

Pipe Size Selected **2** inches
Pressure Entering Manifold **-5.2** in Hg

| Column | (C) | (D) | (E) | (F) | (G) | (H) | (I) | | (J) | (K) | (L) | (M) | (N) | (O) | (P) | (Q) | (R) | (S) | (T) | (U) | (V) | (W) | (X) | (Y) | (Z) | (AA) | (AB) | (AC) | (AD) | (AE) |
|---|---|---|---|---|---|---|---|---|---|---|---|---|---|---|---|---|---|---|---|---|---|---|---|---|---|---|---|---|---|---|
| Item | Pipe ID | | Area A | Length L | | Fitting Loss Coeff K | Flow | | dT (Fan) | Inlet Temperature | | Upstream Pressure | | | Added Static Pressure | Velocity | | Mass Flow | Mass Flow / Area G | | Re | f | Fitting Loss | Equipment Static Loss | Length Losses | Downstream Pressure Drop | | $P_{out}$ | | Pressure Change |
| | (in) | (m) | (m2) | (ft) | (m) | | (acfm) | (scfm) | (deg F) | (deg F) | (K) | (Pa) | (in WG) | (in Hg, gauge) | (in WG) | (fpm) | (m/s) | (lbm / min) | (lbm / ft2 min) | (kg / m2 sec) | | | (Pa) | (Pa) | (Pa) | (Pa) | (psi) | (in WG) | (in WG) | |
| ***From Well to Manifold*** | | | | | | | | | | | | | | | | | | | | | | | | | | | | | | |
| Branch Tee | 2 | 0.1 | 0.00 | 1 | 0.3 | 1.14 | 56 | 45 | | 68 | 293.15 | 87770 | -54.6 | -4.0 | | 2557 | 13 | 3.62 | 166 | 13.5 | 37513 | 0.024 | 100 | | 13 | 87657 | -1.99 | -55 | 0.5 | 0% |
| Pipe | 2 | 0.1 | 0.00 | 5 | 1.5 | | 56 | 45 | | 68 | 293.15 | 87770 | -54.6 | -4.0 | | 2557 | 13 | 3.62 | 166 | 13.5 | 37513 | 0.024 | 0 | | 63 | 87706 | -1.98 | -55 | 0.3 | 0% |
| Standard Elbow 90° | 2 | 0.1 | 0.00 | 1 | 0.3 | 0.57 | 56 | 45 | | 68 | 293.15 | 87706 | -54.8 | -4.0 | | 2557 | 13 | 3.62 | 166 | 13.5 | 37513 | 0.024 | 50 | | 13 | 87644 | -1.99 | -55 | 0.3 | 0% |
| Pipe | 2 | 0.1 | 0.00 | 5 | 1.5 | | 56 | 45 | | 68 | 293.15 | 87644 | -55.1 | -4.0 | | 2557 | 13 | 3.62 | 166 | 13.5 | 37513 | 0.024 | 0 | | 64 | 87580 | -2.00 | -55 | 0.3 | 0% |
| Standard Elbow 90° | 2 | 0.1 | 0.00 | 1 | 0.3 | 0.57 | 56 | 45 | | 68 | 293.15 | 87580 | -55.3 | -4.1 | | 2557 | 13 | 3.62 | 166 | 13.5 | 37513 | 0.024 | 50 | | 13 | 87517 | -2.01 | -56 | 0.3 | 0% |
| Pipe | 2 | 0.1 | 0.00 | 100 | 30.5 | | 56 | 45 | | 68 | 293.15 | 87517 | -55.6 | -4.1 | | 2557 | 13 | 3.62 | 166 | 13.5 | 37513 | 0.024 | 0 | | 1282 | 86235 | -2.19 | -61 | 5.2 | 1% |
| Standard Elbow 90° | 2 | 0.1 | 0.00 | 1 | 0.3 | 0.57 | 56 | 44 | | 68 | 293.15 | 86235 | -60.7 | -4.5 | | 2557 | 13 | 3.62 | 166 | 13.5 | 37513 | 0.024 | 50 | | 13 | 86172 | -2.20 | -61 | 0.3 | 0% |
| Pipe | 2 | 0.1 | 0.00 | 35 | 10.7 | | 56 | 44 | | 68 | 293.15 | 86172 | -61.0 | -4.5 | | 2557 | 13 | 3.62 | 166 | 13.5 | 37513 | 0.024 | 0 | | 454 | 85719 | -2.27 | -63 | 1.8 | 1% |
| Standard Elbow 90° | 2 | 0.1 | 0.00 | 1 | 0.3 | 0.57 | 56 | 44 | | 68 | 293.15 | 85719 | -62.8 | -4.6 | | 2557 | 13 | 3.62 | 166 | 13.5 | 37513 | 0.024 | 50 | | 13 | 85656 | -2.28 | -63 | 0.3 | 0% |
| Pipe | 2 | 0.1 | 0.00 | 80 | 24.4 | | 56 | 44 | | 68 | 293.15 | 85656 | -63.1 | -4.6 | | 2557 | 13 | 3.62 | 166 | 13.5 | 37513 | 0.024 | 0 | | 1047 | 84609 | -2.43 | -67 | 4.2 | 1% |
| Standard Elbow 90° | 2 | 0.1 | 0.00 | 1 | 0.3 | 0.57 | 56 | 43 | | 68 | 293.15 | 84609 | -67.3 | -4.9 | | 2557 | 13 | 3.62 | 166 | 13.5 | 37513 | 0.024 | 50 | | 13 | 84546 | -2.44 | -68 | 0.3 | 0% |
| Pipe | 2 | 0.1 | 0.00 | 5 | 1.5 | | 56 | 43 | | 68 | 293.15 | 84546 | -67.5 | -5.0 | | 2557 | 13 | 3.62 | 166 | 13.5 | 37513 | 0.024 | 0 | | 66 | 84480 | -2.45 | -68 | 0.3 | 0% |
| Standard Elbow 90° | 2 | 0.1 | 0.00 | 1 | 0.3 | 0.57 | 56 | 43 | | 68 | 293.15 | 84480 | -67.8 | -5.0 | | 2557 | 13 | 3.62 | 166 | 13.5 | 37513 | 0.024 | 50 | | 13 | 84417 | -2.46 | -68 | 0.3 | 0% |
| Pipe | 2 | 0.1 | 0.00 | 20 | 6.1 | | 56 | 43 | | 68 | 293.15 | 84417 | -68.1 | -5.0 | | 2557 | 13 | 3.62 | 166 | 13.5 | 37513 | 0.024 | 0 | | 264 | 84152 | -2.49 | -69 | 1.1 | 0% |
| Through Tee | 2 | 0.1 | 0.00 | 1 | 0.3 | 0.38 | 56 | 43 | | 68 | 293.15 | 84152 | -69.1 | -5.1 | | 2557 | 13 | 3.62 | 166 | 13.5 | 37513 | 0.024 | 33 | | 13 | 84106 | -2.50 | -69 | 0.2 | 0% |
| Flow Meter | 2 | 0.1 | 0.00 | 1 | 0.3 | 0.8 | 56 | 43 | | 68 | 293.15 | 84106 | -69.3 | -5.1 | | 2557 | 13 | 3.62 | 166 | 13.5 | 37513 | 0.024 | 70 | | 13 | 84022 | -2.51 | -70 | 0.3 | 0% |
| Ball Valve | 2 | 0.1 | 0.00 | 1 | 0.3 | 0.06 | 56 | 43 | | 68 | 293.15 | 84022 | -69.6 | -5.1 | | 2557 | 13 | 3.62 | 166 | 13.5 | 37513 | 0.024 | 5 | | 13 | 84004 | -2.52 | -70 | 0.1 | 0% |
| Combining Tee | 2 | 0.1 | 0.00 | 5 | 1.5 | | 56 | 43 | | 68 | 293.15 | 84004 | -69.7 | -5.1 | | 2557 | 13 | 3.62 | 166 | 13.5 | 37513 | 0.024 | 0 | 100 | 66 | 83837 | -2.54 | -70 | 0.7 | 0% |

**Omega OU1 (On Site Soils)**
**Full Scale OSS Design**
**Pressure Drop Calculations Summary**

Performed by JTB Date 10/9/2012
Checked by NLS Date 10/13/2012

**Purpose**: size pipe for Well ID: VE-11SA

Assumption:
Isothermal, change in pressure is less than 10%
No density effects from heating of vapor by fans
No effects from moisture in air (heavier air, more friction etc)
Given only one SVE performance data set exists for each area, all future wells are assumed to perform in the same manner
All quantities and wells listed include spare capacity for additional wells

Pipe Size Selected **2** inches
Pressure Entering Manifold **-5.2** in Hg

| Column | (C) | (D) | (E) | (F) | (G) | (H) | (I) | | (J) | (K) | (L) | (M) | (N) | (O) | (P) | (Q) | (R) | (S) | (T) | (U) | (V) | (W) | (X) | (Y) | (Z) | (AA) | (AB) | (AC) | (AD) | (AE) |
|---|---|---|---|---|---|---|---|---|---|---|---|---|---|---|---|---|---|---|---|---|---|---|---|---|---|---|---|---|---|---|
| Item | Pipe ID | | Area A | Length L | | Fitting Loss Coeff K | Flow | | dT (Fan) | Inlet Temperature | | Upstream Pressure | | | Added Static Pressure | Velocity | | Mass Flow | Mass Flow / Area G | | Re | f | Fitting Loss | Equipment Static Loss | Length Losses | Downstream Pressure | | Drop | Pressure Change |
| | (in) | (m) | (m2) | (ft) | (m) | | (acfm) | (scfm) | (deg F) | (deg F) | (K) | (Pa) | (in WG) | (in Hg, gauge) | (in WG) | (fpm) | (m/s) | (lbm / min) | (lbm / ft2 min) | (kg / m2 sec) | | | (Pa) | (Pa) | (Pa) | (Pa) | $P_{out}$ (psi) | (in WG) | (in WG) | |
| ***From Well to Manifold*** | | | | | | | | | | | | | | | | | | | | | | | | | | | | | | |
| Branch Tee | **2** | 0.1 | 0.00 | **1** | 0.3 | 1.14 | 56 | 45 | | 69 | 293.71 | 87770 | -54.6 | -4.0 | | 2562 | 13 | 3.62 | 166 | 13.5 | 37513 | 0.024 | 100 | | 13 | 87657 | -1.99 | -55 | 0.5 | 0% |
| Pipe | **2** | 0.1 | 0.00 | **5** | 1.5 | | 56 | 45 | | 69 | 293.71 | 87770 | -54.6 | -4.0 | | 2562 | 13 | 3.62 | 166 | 13.5 | 37513 | 0.024 | 0 | | 64 | 87706 | -1.98 | -55 | 0.3 | 0% |
| Standard Elbow 90° | **2** | 0.1 | 0.00 | **1** | 0.3 | 0.57 | 56 | 45 | | 69 | 293.71 | 87706 | -54.8 | -4.0 | | 2562 | 13 | 3.62 | 166 | 13.5 | 37513 | 0.024 | 50 | | 13 | 87643 | -1.99 | -55 | 0.3 | 0% |
| Pipe | **2** | 0.1 | 0.00 | **5** | 1.5 | | 56 | 45 | | 69 | 293.71 | 87643 | -55.1 | -4.0 | | 2562 | 13 | 3.62 | 166 | 13.5 | 37513 | 0.024 | 0 | | 64 | 87580 | -2.00 | -55 | 0.3 | 0% |
| Standard Elbow 90° | **2** | 0.1 | 0.00 | **1** | 0.3 | 0.57 | 56 | 45 | | 69 | 293.71 | 87580 | -55.3 | -4.1 | | 2562 | 13 | 3.62 | 166 | 13.5 | 37513 | 0.024 | 50 | | 13 | 87517 | -2.01 | -56 | 0.3 | 0% |
| Pipe | **2** | 0.1 | 0.00 | **100** | 30.5 | | 56 | 45 | | 69 | 293.71 | 87517 | -55.6 | -4.1 | | 2562 | 13 | 3.62 | 166 | 13.5 | 37513 | 0.024 | 0 | | 1285 | 86232 | -2.19 | -61 | 5.2 | 1% |
| Standard Elbow 90° | **2** | 0.1 | 0.00 | **1** | 0.3 | 0.57 | 56 | 44 | | 69 | 293.71 | 86232 | -60.8 | -4.5 | | 2562 | 13 | 3.62 | 166 | 13.5 | 37513 | 0.024 | 50 | | 13 | 86169 | -2.20 | -61 | 0.3 | 0% |
| Pipe | **2** | 0.1 | 0.00 | **35** | 10.7 | | 56 | 44 | | 69 | 293.71 | 86169 | -61.0 | -4.5 | | 2562 | 13 | 3.62 | 166 | 13.5 | 37513 | 0.024 | 0 | | 454 | 85715 | -2.27 | -63 | 1.8 | 1% |
| Standard Elbow 90° | **2** | 0.1 | 0.00 | **1** | 0.3 | 0.57 | 56 | 44 | | 69 | 293.71 | 85715 | -62.8 | -4.6 | | 2562 | 13 | 3.62 | 166 | 13.5 | 37513 | 0.024 | 50 | | 13 | 85652 | -2.28 | -63 | 0.3 | 0% |
| Pipe | **2** | 0.1 | 0.00 | **80** | 24.4 | | 56 | 44 | | 69 | 293.71 | 85652 | -63.1 | -4.6 | | 2562 | 13 | 3.62 | 166 | 13.5 | 37513 | 0.024 | 0 | | 1049 | 84603 | -2.43 | -67 | 4.2 | 1% |
| Standard Elbow 90° | **2** | 0.1 | 0.00 | **1** | 0.3 | 0.57 | 56 | 43 | | 69 | 293.71 | 84603 | -67.3 | -4.9 | | 2562 | 13 | 3.62 | 166 | 13.5 | 37513 | 0.024 | 50 | | 13 | 84540 | -2.44 | -68 | 0.3 | 0% |
| Pipe | **2** | 0.1 | 0.00 | **5** | 1.5 | | 56 | 43 | | 69 | 293.71 | 84540 | -67.6 | -5.0 | | 2562 | 13 | 3.62 | 166 | 13.5 | 37513 | 0.024 | 0 | | 66 | 84474 | -2.45 | -68 | 0.3 | 0% |
| Standard Elbow 90° | **2** | 0.1 | 0.00 | **1** | 0.3 | 0.57 | 56 | 43 | | 69 | 293.71 | 84474 | -67.8 | -5.0 | | 2562 | 13 | 3.62 | 166 | 13.5 | 37513 | 0.024 | 50 | | 13 | 84410 | -2.46 | -68 | 0.3 | 0% |
| Pipe | **2** | 0.1 | 0.00 | **20** | 6.1 | | 56 | 43 | | 69 | 293.71 | 84410 | -68.1 | -5.0 | | 2562 | 13 | 3.62 | 166 | 13.5 | 37513 | 0.024 | 0 | | 265 | 84145 | -2.50 | -69 | 1.1 | 0% |
| Through Tee | **2** | 0.1 | 0.00 | **1** | 0.3 | 0.38 | 56 | 43 | | 69 | 293.71 | 84145 | -69.1 | -5.1 | | 2562 | 13 | 3.62 | 166 | 13.5 | 37513 | 0.024 | 33 | | 13 | 84099 | -2.50 | -69 | 0.2 | 0% |
| Flow Meter | **2** | 0.1 | 0.00 | **1** | 0.3 | **0.8** | 56 | 43 | | 69 | 293.71 | 84099 | -69.3 | -5.1 | | 2562 | 13 | 3.62 | 166 | 13.5 | 37513 | 0.024 | 70 | | 13 | 84015 | -2.51 | -70 | 0.3 | 0% |
| Ball Valve | **2** | 0.1 | 0.00 | **1** | 0.3 | 0.06 | 56 | 43 | | 69 | 293.71 | 84015 | -69.7 | -5.1 | | 2562 | 13 | 3.62 | 166 | 13.5 | 37513 | 0.024 | 5 | | 13 | 83996 | -2.52 | -70 | 0.1 | 0% |
| Combining Tee | **2** | 0.1 | 0.00 | **5** | 1.5 | | 56 | 43 | | 69 | 293.71 | 83996 | -69.7 | -5.1 | | 2562 | 13 | 3.62 | 166 | 13.5 | 37513 | 0.024 | 0 | 100 | 66 | 83830 | -2.54 | -70 | 0.7 | 0% |

**Omega OU1 (On Site Soils)**
**Full Scale OSS Design**
**Pressure Drop Calculations Summary**

Performed by JTB Date 10/9/2012
Checked by NLS Date 10/13/2012

**Purpose**: size pipe for Well ID: VE-12S

Assumption:
Isothermal, change in pressure is less than 10%
No density effects from heating of vapor by fans
No effects from moisture in air (heavier air, more friction etc)
Given only one SVE performance data set exists for each area, all future wells are assumed to perform in the same manner.
All quantities and wells listed include spare capacity for additional wells.

Pipe Size Selected **2** inches
Pressure Entering Manifold **-6.7** in Hg

| Column | (C) | (D) | (E) | (F) | (G) | (H) | (I) | | (J) | (K) | (L) | (M) | (N) | (O) | (P) | (Q) | (R) | (S) | (T) | (U) | (V) | (W) | (X) | (Y) | (Z) | (AA) | (AB) | (AC) | (AD) | (AE) |
|---|---|---|---|---|---|---|---|---|---|---|---|---|---|---|---|---|---|---|---|---|---|---|---|---|---|---|---|---|---|---|
| Item | Pipe ID | | Area A | Length L | | Fitting Loss Coeff K | Flow | | dT (Fan) | Inlet Temperature | | Upstream Pressure | | | Added Static Pressure | Velocity | | Mass Flow | Mass Flow / Area G | | Re | f | Fitting Loss | Equipment Static Loss | Length Losses | Downstream Pressure $P_{out}$ | | | Drop | Pressure Change |
| | (in) | (m) | (m2) | (ft) | (m) | | (acfm) | (scfm) | (deg F) | (deg F) | (K) | (Pa) | (in WG) | (in Hg, gauge) | (in WG) | (fpm) | (m/s) | (lbm / min) | (lbm / ft2 min) | (kg / m2 sec) | | | (Pa) | (Pa) | (Pa) | (Pa) | (psi) | (in WG) | (in WG) | |
| ***From Well to Manifold*** | | | | | | | | | | | | | | | | | | | | | | | | | | | | | | |
| Branch Tee | 2 | 0.1 | 0.00 | 1 | 0.3 | 1.14 | 40 | 30 | | 68 | 293.15 | 80998 | -81.8 | -6.0 | | 1847 | 9 | 2.42 | 111 | 9.0 | 25009 | 0.026 | 48 | | 7 | 80943 | -2.96 | -82 | 0.2 | 0% |
| Pipe | 2 | 0.1 | 0.00 | 30 | 9.1 | | 40 | 30 | | 68 | 293.15 | 80998 | -81.8 | -6.0 | | 1847 | 9 | 2.42 | 111 | 9.0 | 25009 | 0.026 | 0 | | 198 | 80800 | -2.98 | -83 | 0.8 | 0% |
| Standard Elbow 90° | 2 | 0.1 | 0.00 | 1 | 0.3 | 0.57 | 40 | 30 | | 68 | 293.15 | 80800 | -82.6 | -6.1 | | 1847 | 9 | 2.42 | 111 | 9.0 | 25009 | 0.026 | 24 | | 7 | 80769 | -2.99 | -83 | 0.1 | 0% |
| Pipe | 2 | 0.1 | 0.00 | 120 | 36.6 | | 40 | 30 | | 68 | 293.15 | 80769 | -82.7 | -6.1 | | 1847 | 9 | 2.42 | 111 | 9.0 | 25009 | 0.026 | 0 | | 798 | 79971 | -3.10 | -86 | 3.2 | 1% |
| Standard Elbow 90° | 2 | 0.1 | 0.00 | 1 | 0.3 | 0.57 | 40 | 30 | | 68 | 293.15 | 79971 | -85.9 | -6.3 | | 1847 | 9 | 2.42 | 111 | 9.0 | 25009 | 0.026 | 24 | | 7 | 79940 | -3.11 | -86 | 0.1 | 0% |
| Pipe | 2 | 0.1 | 0.00 | 55 | 16.8 | | 40 | 30 | | 68 | 293.15 | 79940 | -86.1 | -6.3 | | 1847 | 9 | 2.42 | 111 | 9.0 | 25009 | 0.026 | 0 | | 369 | 79572 | -3.16 | -88 | 1.5 | 0% |
| Standard Elbow 90° | 2 | 0.1 | 0.00 | 1 | 0.3 | 0.57 | 40 | 29 | | 68 | 293.15 | 79572 | -87.5 | -6.4 | | 1847 | 9 | 2.42 | 111 | 9.0 | 25009 | 0.026 | 24 | | 7 | 79541 | -3.16 | -88 | 0.1 | 0% |
| Pipe | 2 | 0.1 | 0.00 | 80 | 24.4 | | 40 | 29 | | 68 | 293.15 | 79541 | -87.7 | -6.4 | | 1847 | 9 | 2.42 | 111 | 9.0 | 25009 | 0.026 | 0 | | 539 | 79001 | -3.24 | -90 | 2.2 | 1% |
| Standard Elbow 90° | 2 | 0.1 | 0.00 | 1 | 0.3 | 0.57 | 40 | 29 | | 68 | 293.15 | 79001 | -89.8 | -6.6 | | 1847 | 9 | 2.42 | 111 | 9.0 | 25009 | 0.026 | 24 | | 7 | 78971 | -3.25 | -90 | 0.1 | 0% |
| Pipe | 2 | 0.1 | 0.00 | 5 | 1.5 | | 40 | 29 | | 68 | 293.15 | 78971 | -90.0 | -6.6 | | 1847 | 9 | 2.42 | 111 | 9.0 | 25009 | 0.026 | 0 | | 34 | 78937 | -3.25 | -90 | 0.1 | 0% |
| Standard Elbow 90° | 2 | 0.1 | 0.00 | 1 | 0.3 | 0.57 | 40 | 29 | | 68 | 293.15 | 78937 | -90.1 | -6.6 | | 1847 | 9 | 2.42 | 111 | 9.0 | 25009 | 0.026 | 24 | | 7 | 78906 | -3.26 | -90 | 0.1 | 0% |
| Pipe | 2 | 0.1 | 0.00 | 20 | 6.1 | | 40 | 29 | | 68 | 293.15 | 78906 | -90.2 | -6.6 | | 1847 | 9 | 2.42 | 111 | 9.0 | 25009 | 0.026 | 0 | | 136 | 78770 | -3.28 | -91 | 0.5 | 0% |
| Through Tee | 2 | 0.1 | 0.00 | 1 | 0.3 | 0.38 | 40 | 29 | | 68 | 293.15 | 78770 | -90.8 | -6.7 | | 1847 | 9 | 2.42 | 111 | 9.0 | 25009 | 0.026 | 16 | | 7 | 78747 | -3.28 | -91 | 0.1 | 0% |
| Flow Meter | 2 | 0.1 | 0.00 | 1 | 0.3 | 0.8 | 40 | 29 | | 68 | 293.15 | 78747 | -90.8 | -6.7 | | 1847 | 9 | 2.42 | 111 | 9.0 | 25009 | 0.026 | 34 | | 7 | 78707 | -3.28 | -91 | 0.2 | 0% |
| Ball Valve | 2 | 0.1 | 0.00 | 1 | 0.3 | 0.06 | 40 | 29 | | 68 | 293.15 | 78707 | -91.0 | -6.7 | | 1847 | 9 | 2.42 | 111 | 9.0 | 25009 | 0.026 | 3 | | 7 | 78697 | -3.29 | -91 | 0.0 | 0% |
| Combining Tee | 2 | 0.1 | 0.00 | 5 | 1.5 | | 40 | 29 | | 68 | 293.15 | 78697 | -91.1 | -6.7 | | 1847 | 9 | 2.42 | 111 | 9.0 | 25009 | 0.026 | 0 | 100 | 34 | 78563 | -3.31 | -92 | 0.5 | 0% |

**Omega OU1 (On Site Soils)**
**Full Scale OSS Design**
**Pressure Drop Calculations Summary**

Performed by JTB Date 10/9/2012
Checked by NLS Date 10/13/2012

**Purpose**: size pipe for Well ID: VE-14S

Assumption:
Isothermal, change in pressure is less than 10%
No density effects from heating of vapor by fans
No effects from moisture in air (heavier air, more friction etc)
Given only one SVE performance data set exists for each area, all future wells are assumed to perform in the same manner.
All quantities and wells listed include spare capacity for additional wells.

Pipe Size Selected **3** inches
Pressure Entering Manifold **-6.2** in Hg

| Column | (C) | (D) | (E) | (F) | (G) | (H) | (I) | | (J) | (K) | (L) | (M) | (N) | (O) | (P) | (Q) | (R) | (S) | (T) | (U) | (V) | (W) | (X) | (Y) | (Z) | (AA) | (AB) | (AC) | (AD) | (AE) |
|---|---|---|---|---|---|---|---|---|---|---|---|---|---|---|---|---|---|---|---|---|---|---|---|---|---|---|---|---|---|---|
| Item | Pipe ID | | Area A | Length L | | Fitting Loss Coeff K | Flow | | dT (Fan) | Inlet Temperature | | Upstream Pressure | | | Added Static Pressure | Velocity | | Mass Flow | Mass Flow / Area G | | Re | f | Fitting Loss | Equipment Static Loss | Length Losses | Downstream Pressure $P_{out}$ | | | Drop | Pressure Change |
| | (in) | (m) | (m2) | (ft) | (m) | | (acfm) | (scfm) | (deg F) | (deg F) | (K) | (Pa) | (in WG) | (in Hg, gauge) | (in WG) | (fpm) | (m/s) | (lbm / min) | (lbm / ft2 min) | (kg / m2 sec) | | | (Pa) | (Pa) | (Pa) | (Pa) | (psi) | (in WG) | (in WG) | |
| ***From Well to Manifold*** | | | | | | | | | | | | | | | | | | | | | | | | | | | | | | |
| Branch Tee | 2 | 0.1 | 0.00 | 1 | 0.3 | 1.14 | 47 | 35 | | 68 | 293.15 | 80998 | -81.8 | -6.0 | | 2155 | 11 | 2.82 | 129 | 10.5 | 29177 | 0.025 | 66 | | 9 | 80923 | -2.96 | -82 | 0.3 | 0% |
| Abrupt Expansion | 3 | 0.1 | 0.00 | 1 | 0.3 | 0.36 | 47 | 35 | | 68 | 293.15 | 80923 | -82.1 | -6.0 | | 958 | 5 | 2.82 | 57 | 4.7 | 19451 | 0.027 | 4 | | 1 | 80918 | -2.96 | -82 | 0.0 | 0% |
| Pipe | 3 | 0.1 | 0.00 | 75 | 22.9 | | 47 | 35 | | 68 | 293.15 | 80918 | -82.1 | -6.0 | | 958 | 5 | 2.82 | 57 | 4.7 | 19451 | 0.027 | 0 | | 92 | 80826 | -2.98 | -82 | 0.4 | 0% |
| Standard Elbow 90° | 3 | 0.1 | 0.00 | 1 | 0.3 | 0.54 | 47 | 35 | | 68 | 293.15 | 80826 | -82.5 | -6.1 | | 958 | 5 | 2.82 | 57 | 4.7 | 19451 | 0.027 | 6 | | 1 | 80819 | -2.98 | -83 | 0.0 | 0% |
| Pipe | 3 | 0.1 | 0.00 | 160 | 48.8 | | 47 | 35 | | 68 | 293.15 | 80819 | -82.5 | -6.1 | | 958 | 5 | 2.82 | 57 | 4.7 | 19451 | 0.027 | 0 | | 197 | 80622 | -3.01 | -83 | 0.8 | 0% |
| Standard Elbow 45° | 3 | 0.1 | 0.00 | 1 | 0.3 | 0.29 | 47 | 35 | | 68 | 293.15 | 80622 | -83.3 | -6.1 | | 958 | 5 | 2.82 | 57 | 4.7 | 19451 | 0.027 | 3 | | 1 | 80617 | -3.01 | -83 | 0.0 | 0% |
| Pipe | 3 | 0.1 | 0.00 | 57 | 17.4 | | 47 | 35 | | 68 | 293.15 | 80617 | -83.3 | -6.1 | | 958 | 5 | 2.82 | 57 | 4.7 | 19451 | 0.027 | 0 | | 70 | 80547 | -3.02 | -84 | 0.3 | 0% |
| Standard Elbow 45° | 3 | 0.1 | 0.00 | 1 | 0.3 | 0.29 | 47 | 35 | | 68 | 293.15 | 80547 | -83.6 | -6.1 | | 958 | 5 | 2.82 | 57 | 4.7 | 19451 | 0.027 | 3 | | 1 | 80543 | -3.02 | -84 | 0.0 | 0% |
| Pipe | 3 | 0.1 | 0.00 | 70 | 21.3 | | 47 | 35 | | 68 | 293.15 | 80543 | -83.6 | -6.1 | | 958 | 5 | 2.82 | 57 | 4.7 | 19451 | 0.027 | 0 | | 86 | 80456 | -3.03 | -84 | 0.3 | 0% |
| Standard Elbow 90° | 3 | 0.1 | 0.00 | 1 | 0.3 | 0.54 | 47 | 35 | | 68 | 293.15 | 80456 | -84.0 | -6.2 | | 958 | 5 | 2.82 | 57 | 4.7 | 19451 | 0.027 | 6 | | 1 | 80449 | -3.03 | -84 | 0.0 | 0% |
| Pipe (in plant) | 3 | 0.1 | 0.00 | 20 | 6.1 | | 47 | 35 | | 68 | 293.15 | 80449 | -84.0 | -6.2 | | 958 | 5 | 2.82 | 57 | 4.7 | 19451 | 0.027 | 0 | | 25 | 80424 | -3.04 | -84 | 0.1 | 0% |
| Through Tee | 3 | 0.1 | 0.00 | 1 | 0.3 | 0.36 | 47 | 35 | | 68 | 293.15 | 80424 | -84.1 | -6.2 | | 958 | 5 | 2.82 | 57 | 4.7 | 19451 | 0.027 | 4 | | 1 | 80419 | -3.04 | -84 | 0.0 | 0% |
| Flow Meter | 3 | 0.1 | 0.00 | 1 | 0.3 | 0.8 | 47 | 35 | | 68 | 293.15 | 80419 | -84.1 | -6.2 | | 958 | 5 | 2.82 | 57 | 4.7 | 19451 | 0.027 | 9 | | 1 | 80409 | -3.04 | -84 | 0.0 | 0% |
| Ball Valve | 3 | 0.1 | 0.00 | 1 | 0.3 | 0.05 | 47 | 35 | | 68 | 293.15 | 80409 | -84.2 | -6.2 | | 958 | 5 | 2.82 | 57 | 4.7 | 19451 | 0.027 | 1 | | 1 | 80407 | -3.04 | -84 | 0.0 | 0% |
| Combining Tee | 3 | 0.1 | 0.00 | 5 | 1.5 | | 47 | 35 | | 68 | 293.15 | 80407 | -84.2 | -6.2 | | 958 | 5 | 2.82 | 57 | 4.7 | 19451 | 0.027 | 0 | 100 | 6 | 80301 | -3.05 | -85 | 0.4 | 0% |

**Omega OU1 (On Site Soils)**
**Full Scale OSS Design**
**Pressure Drop Calculations Summary**

Performed by JTB Date 10/9/2012
Checked by NLS Date 10/13/2012

**Purpose**: size pipe for Well ID: VE-15S

Assumption:
Isothermal, change in pressure is less than 10%
No density effects from heating of vapor by fans
No effects from moisture in air (heavier air, more friction etc)
Given only one SVE performance data set exists for each area, all future wells are assumed to perform in the same manner.
All quantities and wells listed include spare capacity for additional wells.

Pipe Size Selected **3** inches
Pressure Entering Manifold **-6.7** in Hg

| Column | (C) | (D) | (E) | (F) | (G) | (H) | (I) | | (J) | (K) | (L) | (M) | (N) | (O) | (P) | (Q) | (R) | (S) | (T) | (U) | (V) | (W) | (X) | (Y) | (Z) | (AA) | (AB) | (AC) | (AD) | (AE) |
|---|---|---|---|---|---|---|---|---|---|---|---|---|---|---|---|---|---|---|---|---|---|---|---|---|---|---|---|---|---|---|
| Item | Pipe ID | | Area A | Length L | | Fitting Loss Coeff K | Flow | | dT (Fan) | Inlet Temperature | | Upstream Pressure | | | Added Static Pressure | Velocity | | Mass Flow | Mass Flow / Area G | | Re | f | Fitting Loss | Equipment Static Loss | Length Losses | Downstream Pressure $P_{out}$ | | | Drop | Pressure Change |
| | (in) | (m) | (m2) | (ft) | (m) | | (acfm) | (scfm) | (deg F) | (deg F) | (K) | (Pa) | (in WG) | (in Hg, gauge) | (in WG) | (fpm) | (m/s) | (lbm / min) | (lbm / ft2 min) | (kg / m2 sec) | | | (Pa) | (Pa) | (Pa) | (Pa) | (psi) | (in WG) | (in WG) | |
| ***From Well to Manifold*** | | | | | | | | | | | | | | | | | | | | | | | | | | | | | | |
| Branch Tee | 2 | 0.1 | 0.00 | 1 | 0.3 | 1.14 | 121 | 90 | | 68 | 293.15 | 80998 | -82 | -6 | | 5542 | 28 | 7.25 | 332 | 27.0 | 75026 | 0.022 | 434 | | 49 | 80515 | -3.02 | -84 | 1.9 | 1% |
| Abrupt Expansion | 3 | 0.1 | 0.00 | 1 | 0.3 | 0.36 | 121 | 89 | | 68 | 293.15 | 80515 | -84 | -6 | | 2463 | 13 | 7.25 | 148 | 12.0 | 50017 | 0.022 | 27 | | 7 | 80481 | -3.03 | -84 | 0.1 | 0% |
| Pipe | 3 | 0.1 | 0.00 | 135 | 41.1 | | 121 | 89 | | 68 | 293.15 | 80481 | -84 | -6 | | 2463 | 13 | 7.25 | 148 | 12.0 | 50017 | 0.022 | 0 | | 915 | 79566 | -3.16 | -88 | 3.7 | 1% |
| Standard Elbow 90° | 3 | 0.1 | 0.00 | 1 | 0.3 | 0.54 | 121 | 88 | | 68 | 293.15 | 79566 | -88 | -6 | | 2463 | 13 | 7.25 | 148 | 12.0 | 50017 | 0.022 | 41 | | 7 | 79518 | -3.17 | -88 | 0.2 | 0% |
| Pipe | 3 | 0.1 | 0.00 | 65 | 19.8 | | 121 | 88 | | 68 | 293.15 | 79518 | -88 | -6 | | 2463 | 13 | 7.25 | 148 | 12.0 | 50017 | 0.022 | 0 | | 445 | 79074 | -3.23 | -90 | 1.8 | 1% |
| Standard Elbow 90° | 3 | 0.1 | 0.00 | 1 | 0.3 | 0.54 | 121 | 88 | | 68 | 293.15 | 79074 | -90 | -7 | | 2463 | 13 | 7.25 | 148 | 12.0 | 50017 | 0.022 | 41 | | 7 | 79026 | -3.24 | -90 | 0.2 | 0% |
| Pipe (in plant) | 3 | 0.1 | 0.00 | 20 | 6.1 | | 121 | 88 | | 68 | 293.15 | 79026 | -90 | -7 | | 2463 | 13 | 7.25 | 148 | 12.0 | 50017 | 0.022 | 0 | | 137 | 78889 | -3.26 | -90 | 0.6 | 0% |
| Through Tee | 3 | 0.1 | 0.00 | 1 | 0.3 | 0.36 | 121 | 88 | | 68 | 293.15 | 78889 | -90 | -7 | | 2463 | 13 | 7.25 | 148 | 12.0 | 50017 | 0.022 | 27 | | 7 | 78855 | -3.26 | -90 | 0.1 | 0% |
| Flow Meter | 3 | 0.1 | 0.00 | 1 | 0.3 | 0.8 | 121 | 88 | | 68 | 293.15 | 78855 | -90 | -7 | | 2463 | 13 | 7.25 | 148 | 12.0 | 50017 | 0.022 | 60 | | 7 | 78788 | -3.27 | -91 | 0.3 | 0% |
| Ball Valve | 3 | 0.1 | 0.00 | 1 | 0.3 | 0.05 | 121 | 88 | | 68 | 293.15 | 78788 | -91 | -7 | | 2463 | 13 | 7.25 | 148 | 12.0 | 50017 | 0.022 | 4 | | 7 | 78777 | -3.27 | -91 | 0.0 | 0% |
| Combining Tee | 3 | 0.1 | 0.00 | 5 | 1.5 | | 121 | 88 | | 68 | 293.15 | 78777 | -91 | -7 | | 2463 | 13 | 7.25 | 148 | 12.0 | 50017 | 0.022 | 0 | 100 | 34 | 78643 | -3.29 | -91 | 0.5 | 0% |

**Omega OU1 (On Site Soils)**
**Full Scale OSS Design**
**Pressure Drop Calculations Summary**

Performed by NLS Date 5/13/2013
Checked by JTB Date 5/14/2013

**Purpose**: size pipe for Well ID: VE-2D NOTE: PRESSURE LOSS CALCS ARE DONE ASSUMING ACCESS TO TERRAPAVE PROPERTY

Assumption:
Isothermal, change in pressure is less than 10%
No density effects from heating of vapor by fans
No effects from moisture in air (heavier air, more friction etc)
Given only one SVE performance data set exists for each area, all future wells are assumed to perform in the same manner.
All quantities and wells listed include spare capacity for additional wells.

Pipe Size Selected **2** inches
Pressure Entering Manifold **-7.5** in Hg

| Column | (C) | (D) | (E) | (F) | (G) | (H) | (I) | | (J) | (K) | (L) | (M) | (N) | (O) | (P) | (Q) | (R) | (S) | (T) | (U) | (V) | (W) | (X) | (Y) | (Z) | (AA) | (AB) | (AC) | (AD) | (AE) |
|---|---|---|---|---|---|---|---|---|---|---|---|---|---|---|---|---|---|---|---|---|---|---|---|---|---|---|---|---|---|---|
| Item | Pipe ID | | Area A | Length L | | Fitting Loss Coeff K | Flow | | dT (Fan) | Inlet Temperature | | Upstream Pressure | | | Added Static Pressure | Velocity | | Mass Flow | Mass Flow / Area G | | Re | f | Fitting Loss | Equipment Static Loss | Length Losses | Downstream Pressure $P_{out}$ | | | Drop | Pressure Change |
| | (in) | (m) | (m2) | (ft) | (m) | | (acfm) | (scfm) | (deg F) | (deg F) | (K) | (Pa) | (in WG) | (in Hg, gauge) | (in WG) | (fpm) | (m/s) | (lbm / min) | (lbm / ft2 min) | (kg / m2 sec) | | | (Pa) | (Pa) | (Pa) | (Pa) | (psi) | (in WG) | (in WG) | |
| ***From Well to Manifold*** | | | | | | | | | | | | | | | | | | | | | | | | | | | | | | |
| Branch Tee | 4 | 0.1 | 0.01 | 1 | 0.3 | 1.02 | 47 | 33 | | 68 | 293.15 | 77612 | -95.4 | -7.0 | | 535 | 3 | 2.68 | 31 | 2.5 | 13880 | 0.029 | 3 | | 0 | 77608 | -3.44 | -95 | 0.0 | 0% |
| Abrupt Reduction | 2 | 0.1 | 0.00 | 1 | 0.3 | 0.375 | 47 | 33 | | 68 | 293.15 | 77608 | -95.4 | -7.0 | | 2140 | 11 | 2.68 | 123 | 10.0 | 27760 | 0.025 | 20 | | 8 | 77579 | -3.45 | -96 | 0.1 | 0% |
| Pipe | 2 | 0.1 | 0.00 | 5 | 1.5 | | 47 | 33 | | 68 | 293.15 | 77579 | -95.5 | -7.0 | | 2140 | 11 | 2.68 | 123 | 10.0 | 27760 | 0.025 | 0 | | 42 | 77538 | -3.45 | -96 | 0.2 | 0% |
| Standard Elbow 90° | 2 | 0.1 | 0.00 | 1 | 0.3 | 0.57 | 47 | 33 | | 68 | 293.15 | 77538 | -95.7 | -7.0 | | 2140 | 11 | 2.68 | 123 | 10.0 | 27760 | 0.025 | 31 | | 8 | 77498 | -3.46 | -96 | 0.2 | 0% |
| Pipe | 2 | 0.1 | 0.00 | 40 | 12.2 | | 47 | 33 | | 68 | 293.15 | 77498 | -95.9 | -7.0 | | 2140 | 11 | 2.68 | 123 | 10.0 | 27760 | 0.025 | 0 | | 334 | 77165 | -3.51 | -97 | 1.3 | 0% |
| Standard Elbow 45° | 2 | 0.1 | 0.00 | 1 | 0.3 | 0.3 | 47 | 33 | | 68 | 293.15 | 77165 | -97.2 | -7.1 | | 2140 | 11 | 2.68 | 123 | 10.0 | 27760 | 0.025 | 16 | | 8 | 77140 | -3.51 | -97 | 0.1 | 0% |
| Pipe | 2 | 0.1 | 0.00 | 90 | 27.4 | | 47 | 33 | | 68 | 293.15 | 77140 | -97.3 | -7.1 | | 2140 | 11 | 2.68 | 123 | 10.0 | 27760 | 0.025 | 0 | | 756 | 76384 | -3.62 | -100 | 3.0 | 1% |
| Standard Elbow 90° | 2 | 0.1 | 0.00 | 1 | 0.3 | 0.57 | 47 | 33 | | 68 | 293.15 | 76384 | -100.4 | -7.4 | | 2140 | 11 | 2.68 | 123 | 10.0 | 27760 | 0.025 | 31 | | 8 | 76344 | -3.63 | -101 | 0.2 | 0% |
| Pipe (in plant) | 2 | 0.1 | 0.00 | 20 | 6.1 | | 47 | 33 | | 68 | 293.15 | 76344 | -100.5 | -7.4 | | 2140 | 11 | 2.68 | 123 | 10.0 | 27760 | 0.025 | 0 | | 169 | 76175 | -3.65 | -101 | 0.7 | 0% |
| Through Tee | 2 | 0.1 | 0.00 | 1 | 0.3 | 0.38 | 47 | 33 | | 68 | 293.15 | 76175 | -101.2 | -7.4 | | 2140 | 11 | 2.68 | 123 | 10.0 | 27760 | 0.025 | 21 | | 8 | 76146 | -3.66 | -101 | 0.1 | 0% |
| Flow Meter | 2 | 0.1 | 0.00 | 1 | 0.3 | 0.8 | 47 | 33 | | 68 | 293.15 | 76146 | -101.3 | -7.4 | | 2140 | 11 | 2.68 | 123 | 10.0 | 27760 | 0.025 | 44 | | 8 | 76094 | -3.66 | -102 | 0.2 | 0% |
| Ball Valve | 2 | 0.1 | 0.00 | 1 | 0.3 | 0.06 | 47 | 33 | | 68 | 293.15 | 76094 | -101.5 | -7.5 | | 2140 | 11 | 2.68 | 123 | 10.0 | 27760 | 0.025 | 3 | | 8 | 76082 | -3.67 | -102 | 0.0 | 0% |
| Combining Tee | 2 | 0.1 | 0.00 | 5 | 1.5 | | 47 | 33 | | 68 | 293.15 | 76082 | -101.6 | -7.5 | | 2140 | 11 | 2.68 | 123 | 10.0 | 27760 | 0.025 | 0 | 100 | 42 | 75940 | -3.69 | -102 | 0.6 | 0% |

**Omega OU1 (On Site Soils)**
**Full Scale OSS Design**
**Pressure Drop Calculations Summary**

Performed by NLS Date 5/13/2013
Checked by JTB Date 5/14/2013

**Purpose**: size pipe for Well ID: VE-2DA NOTE: PRESSURE LOSS CALCS ARE DONE ASSUMING ACCESS TO TERRAPAVE PROPERTY

Assumption:
Isothermal, change in pressure is less than 10%
No density effects from heating of vapor by fans
No effects from moisture in air (heavier air, more friction etc)
Given only one SVE performance data set exists for each area, all future wells are assumed to perform in the same manner.
All quantities and wells listed include spare capacity for additional wells.

Pipe Size Selected **2** inches
Pressure Entering Manifold **-7.5** in Hg

| Column | (C) | (D) | (E) | (F) | (G) | (H) | (I) | | (J) | (K) | (L) | (M) | (N) | (O) | (P) | (Q) | (R) | (S) | (T) | (U) | (V) | (W) | (X) | (Y) | (Z) | (AA) | (AB) | (AC) | (AD) | (AE) |
|---|---|---|---|---|---|---|---|---|---|---|---|---|---|---|---|---|---|---|---|---|---|---|---|---|---|---|---|---|---|---|
| Item | Pipe ID | | Area A | Length L | | Fitting Loss Coeff K | Flow | | dT (Fan) | Inlet Temperature | | Upstream Pressure | | | Added Static Pressure | Velocity | | Mass Flow | Mass Flow / Area G | | Re | f | Fitting Loss | Equipment Static Loss | Length Losses | Downstream Pressure $P_{out}$ | | | Drop | Pressure Change |
| | (in) | (m) | (m2) | (ft) | (m) | | (acfm) | (scfm) | (deg F) | (deg F) | (K) | (Pa) | (in WG) | (in Hg, gauge) | (in WG) | (fpm) | (m/s) | (lbm / min) | (lbm / ft2 min) | (kg / m2 sec) | | | (Pa) | (Pa) | (Pa) | (Pa) | (psi) | (in WG) | (in WG) | |
| ***From Well to Manifold*** | | | | | | | | | | | | | | | | | | | | | | | | | | | | | | |
| Branch Tee | 4 | 0.1 | 0.01 | 1 | 0.3 | 1.02 | 47 | 33 | 68 | 293.15 | 77612 | -95.4 | -7.0 | | 535 | 3 | 2.68 | 31 | 2.5 | 13880 | 0.029 | 3 | | 0 | 77608 | -3.44 | -95 | 0.0 | 0% |
| Abrupt Reduction | 2 | 0.1 | 0.00 | 1 | 0.3 | 0.375 | 47 | 33 | 68 | 293.15 | 77608 | -95.4 | -7.0 | | 2140 | 11 | 2.68 | 123 | 10.0 | 27760 | 0.025 | 20 | | 8 | 77579 | -3.45 | -96 | 0.1 | 0% |
| Pipe | 2 | 0.1 | 0.00 | 5 | 1.5 | | 47 | 33 | 68 | 293.15 | 77579 | -95.5 | -7.0 | | 2140 | 11 | 2.68 | 123 | 10.0 | 27760 | 0.025 | 0 | | 42 | 77538 | -3.45 | -96 | 0.2 | 0% |
| Standard Elbow 90° | 2 | 0.1 | 0.00 | 1 | 0.3 | 0.57 | 47 | 33 | 68 | 293.15 | 77538 | -95.7 | -7.0 | | 2140 | 11 | 2.68 | 123 | 10.0 | 27760 | 0.025 | 31 | | 8 | 77498 | -3.46 | -96 | 0.2 | 0% |
| Pipe | 2 | 0.1 | 0.00 | 40 | 12.2 | | 47 | 33 | 68 | 293.15 | 77498 | -95.9 | -7.0 | | 2140 | 11 | 2.68 | 123 | 10.0 | 27760 | 0.025 | 0 | | 334 | 77165 | -3.51 | -97 | 1.3 | 0% |
| Standard Elbow 45° | 2 | 0.1 | 0.00 | 1 | 0.3 | 0.3 | 47 | 33 | 68 | 293.15 | 77165 | -97.2 | -7.1 | | 2140 | 11 | 2.68 | 123 | 10.0 | 27760 | 0.025 | 16 | | 8 | 77140 | -3.51 | -97 | 0.1 | 0% |
| Pipe | 2 | 0.1 | 0.00 | 90 | 27.4 | | 47 | 33 | 68 | 293.15 | 77140 | -97.3 | -7.1 | | 2140 | 11 | 2.68 | 123 | 10.0 | 27760 | 0.025 | 0 | | 756 | 76384 | -3.62 | -100 | 3.0 | 1% |
| Standard Elbow 90° | 2 | 0.1 | 0.00 | 1 | 0.3 | 0.57 | 47 | 33 | 68 | 293.15 | 76384 | -100.4 | -7.4 | | 2140 | 11 | 2.68 | 123 | 10.0 | 27760 | 0.025 | 31 | | 8 | 76344 | -3.63 | -101 | 0.2 | 0% |
| Pipe (in plant) | 2 | 0.1 | 0.00 | 20 | 6.1 | | 47 | 33 | 68 | 293.15 | 76344 | -100.5 | -7.4 | | 2140 | 11 | 2.68 | 123 | 10.0 | 27760 | 0.025 | 0 | | 169 | 76175 | -3.65 | -101 | 0.7 | 0% |
| Through Tee | 2 | 0.1 | 0.00 | 1 | 0.3 | 0.38 | 47 | 33 | 68 | 293.15 | 76175 | -101.2 | -7.4 | | 2140 | 11 | 2.68 | 123 | 10.0 | 27760 | 0.025 | 21 | | 8 | 76146 | -3.66 | -101 | 0.1 | 0% |
| Flow Meter | 2 | 0.1 | 0.00 | 1 | 0.3 | 0.8 | 47 | 33 | 68 | 293.15 | 76146 | -101.3 | -7.4 | | 2140 | 11 | 2.68 | 123 | 10.0 | 27760 | 0.025 | 44 | | 8 | 76094 | -3.66 | -102 | 0.2 | 0% |
| Ball Valve | 2 | 0.1 | 0.00 | 1 | 0.3 | 0.06 | 47 | 33 | 68 | 293.15 | 76094 | -101.5 | -7.5 | | 2140 | 11 | 2.68 | 123 | 10.0 | 27760 | 0.025 | 3 | | 8 | 76082 | -3.67 | -102 | 0.0 | 0% |
| Combining Tee | 2 | 0.1 | 0.00 | 5 | 1.5 | | 47 | 33 | 68 | 293.15 | 76082 | -101.6 | -7.5 | | 2140 | 11 | 2.68 | 123 | 10.0 | 27760 | 0.025 | 0 | 100 | 42 | 75940 | -3.69 | -102 | 0.6 | 0% |

**Omega OU1 (On Site Soils)**
**Full Scale OSS Design**
**Pressure Drop Calculations Summary**

Performed by NLS Date 5/13/2013
Checked by JTB Date 5/14/2013

**Purpose**: size pipe for Well ID: VE-2DB NOTE: PRESSURE LOSS CALCS ARE DONE ASSUMING ACCESS TO TERRAPAVE PROPERTY

Assumption:
Isothermal, change in pressure is less than 10%
No density effects from heating of vapor by fans
No effects from moisture in air (heavier air, more friction etc)
Given only one SVE performance data set exists for each area, all future wells are assumed to perform in the same manner.
All quantities and wells listed include spare capacity for additional wells.

Pipe Size Selected **2** inches
Pressure Entering Manifold **-7.5** in Hg

| Column | (C) | (D) | (E) | (F) | (G) | (H) | (I) | | (J) | (K) | (L) | (M) | (N) | (O) | (P) | (Q) | (R) | (S) | (T) | (U) | (V) | (W) | (X) | (Y) | (Z) | (AA) | (AB) | (AC) | (AD) | (AE) |
|---|---|---|---|---|---|---|---|---|---|---|---|---|---|---|---|---|---|---|---|---|---|---|---|---|---|---|---|---|---|---|
| Item | Pipe ID | | Area A | Length L | | Fitting Loss Coeff K | Flow | | dT (Fan) | Inlet Temperature | | Upstream Pressure | | | Added Static Pressure | Velocity | | Mass Flow | Mass Flow / Area G | | Re | f | Fitting Loss | Equipment Static Loss | Length Losses | Downstream Pressure $P_{out}$ | | | Drop | Pressure Change |
| | (in) | (m) | (m2) | (ft) | (m) | | (acfm) | (scfm) | (deg F) | (deg F) | (K) | (Pa) | (in WG) | (in Hg, gauge) | (in WG) | (fpm) | (m/s) | (lbm / min) | (lbm / ft2 min) | (kg / m2 sec) | | | (Pa) | (Pa) | (Pa) | (Pa) | (psi) | (in WG) | (in WG) | |
| ***From Well to Manifold*** | | | | | | | | | | | | | | | | | | | | | | | | | | | | | | |
| Branch Tee | 4 | 0.1 | 0.01 | 1 | 0.3 | 1.02 | 47 | 33 | | 68 | 293.15 | 77612 | -95.4 | -7.0 | | 535 | 3 | 2.68 | 31 | 2.5 | 13880 | 0.029 | 3 | | 0 | 77608 | -3.44 | -95 | 0.0 | 0% |
| Abrupt Reduction | 2 | 0.1 | 0.00 | 1 | 0.3 | 0.375 | 47 | 33 | | 68 | 293.15 | 77608 | -95.4 | -7.0 | | 2140 | 11 | 2.68 | 123 | 10.0 | 27760 | 0.025 | 20 | | 8 | 77579 | -3.45 | -96 | 0.1 | 0% |
| Pipe | 2 | 0.1 | 0.00 | 5 | 1.5 | | 47 | 33 | | 68 | 293.15 | 77579 | -95.5 | -7.0 | | 2140 | 11 | 2.68 | 123 | 10.0 | 27760 | 0.025 | 0 | | 42 | 77538 | -3.45 | -96 | 0.2 | 0% |
| Standard Elbow 90° | 2 | 0.1 | 0.00 | 1 | 0.3 | 0.57 | 47 | 33 | | 68 | 293.15 | 77538 | -95.7 | -7.0 | | 2140 | 11 | 2.68 | 123 | 10.0 | 27760 | 0.025 | 31 | | 8 | 77498 | -3.46 | -96 | 0.2 | 0% |
| Pipe | 2 | 0.1 | 0.00 | 40 | 12.2 | | 47 | 33 | | 68 | 293.15 | 77498 | -95.9 | -7.0 | | 2140 | 11 | 2.68 | 123 | 10.0 | 27760 | 0.025 | 0 | | 334 | 77165 | -3.51 | -97 | 1.3 | 0% |
| Standard Elbow 45° | 2 | 0.1 | 0.00 | 1 | 0.3 | 0.3 | 47 | 33 | | 68 | 293.15 | 77165 | -97.2 | -7.1 | | 2140 | 11 | 2.68 | 123 | 10.0 | 27760 | 0.025 | 16 | | 8 | 77140 | -3.51 | -97 | 0.1 | 0% |
| Pipe | 2 | 0.1 | 0.00 | 90 | 27.4 | | 47 | 33 | | 68 | 293.15 | 77140 | -97.3 | -7.1 | | 2140 | 11 | 2.68 | 123 | 10.0 | 27760 | 0.025 | 0 | | 756 | 76384 | -3.62 | -100 | 3.0 | 1% |
| Standard Elbow 90° | 2 | 0.1 | 0.00 | 1 | 0.3 | 0.57 | 47 | 33 | | 68 | 293.15 | 76384 | -100.4 | -7.4 | | 2140 | 11 | 2.68 | 123 | 10.0 | 27760 | 0.025 | 31 | | 8 | 76344 | -3.63 | -101 | 0.2 | 0% |
| Pipe (in plant) | 2 | 0.1 | 0.00 | 20 | 6.1 | | 47 | 33 | | 68 | 293.15 | 76344 | -100.5 | -7.4 | | 2140 | 11 | 2.68 | 123 | 10.0 | 27760 | 0.025 | 0 | | 169 | 76175 | -3.65 | -101 | 0.7 | 0% |
| Through Tee | 2 | 0.1 | 0.00 | 1 | 0.3 | 0.38 | 47 | 33 | | 68 | 293.15 | 76175 | -101.2 | -7.4 | | 2140 | 11 | 2.68 | 123 | 10.0 | 27760 | 0.025 | 21 | | 8 | 76146 | -3.66 | -101 | 0.1 | 0% |
| Flow Meter | 2 | 0.1 | 0.00 | 1 | 0.3 | 0.8 | 47 | 33 | | 68 | 293.15 | 76146 | -101.3 | -7.4 | | 2140 | 11 | 2.68 | 123 | 10.0 | 27760 | 0.025 | 44 | | 8 | 76094 | -3.66 | -102 | 0.2 | 0% |
| Ball Valve | 2 | 0.1 | 0.00 | 1 | 0.3 | 0.06 | 47 | 33 | | 68 | 293.15 | 76094 | -101.5 | -7.5 | | 2140 | 11 | 2.68 | 123 | 10.0 | 27760 | 0.025 | 3 | | 8 | 76082 | -3.67 | -102 | 0.0 | 0% |
| Combining Tee | 2 | 0.1 | 0.00 | 5 | 1.5 | | 47 | 33 | | 68 | 293.15 | 76082 | -101.6 | -7.5 | | 2140 | 11 | 2.68 | 123 | 10.0 | 27760 | 0.025 | 0 | 100 | 42 | 75940 | -3.69 | -102 | 0.6 | 0% |

**Omega OU1 (On Site Soils)**
**Full Scale OSS Design**
**Pressure Drop Calculations Summary**

Performed by NLS Date 5/13/2013
Checked by JTB Date 5/14/2013

**Purpose**: size pipe for Well ID: DPE-3 NOTE: PRESSURE LOSS CALCS ARE DONE ASSUMING ACCESS TO TERRAPAVE PROPERTY

Assumption:
Isothermal, change in pressure is less than 10%
No density effects from heating of vapor by fans
No effects from moisture in air (heavier air, more friction etc)
Given only one SVE performance data set exists for each area, all future wells are assumed to perform in the same manner.
All quantities and wells listed include spare capacity for additional wells.

Pipe Size Selected **4** inches
Pressure Entering Manifold **-7.2** in Hg

| Column | (C) | (D) | (E) | (F) | (G) | (H) | (I) | | (J) | (K) | (L) | (M) | (N) | (O) | (P) | (Q) | (R) | (S) | (T) | (U) | (V) | (W) | (X) | (Y) | (Z) | (AA) | (AB) | (AC) | (AD) | (AE) |
|---|---|---|---|---|---|---|---|---|---|---|---|---|---|---|---|---|---|---|---|---|---|---|---|---|---|---|---|---|---|---|
| Item | Pipe ID | | Area A | Length L | | Fitting Loss Coeff K | Flow | | dT (Fan) | Inlet Temperature | | Upstream Pressure | | | Added Static Pressure | Velocity | | Mass Flow | Mass Flow / Area G | | Re | f | Fitting Loss | Equipment Static Loss | Length Losses | Downstream Pressure $P_{out}$ | | | Drop | Pressure Change |
| | (in) | (m) | (m2) | (ft) | (m) | | (acfm) | (scfm) | (deg F) | (deg F) | (K) | (Pa) | (in WG) | (in Hg, gauge) | (in WG) | (fpm) | (m/s) | (lbm / min) | (lbm / ft2 min) | (kg / m2 sec) | | | (Pa) | (Pa) | (Pa) | (Pa) | (psi) | (in WG) | (in WG) | |
| ***From Well to Manifold*** | | | | | | | | | | | | | | | | | | | | | | | | | | | | | | |
| Branch Tee | 4 | 0.1 | 0.01 | 1 | 0.3 | 1.02 | 140 | 100 | | 68 | 293.15 | 77612 | -95.4 | -7.0 | | 1607 | 8 | 8.05 | 92 | 7.5 | 41681 | 0.023 | 31 | | 2 | 77578 | -3.45 | -96 | 0.1 | 0% |
| Pipe | 4 | 0.1 | 0.01 | 80 | 24.4 | | 140 | 100 | | 68 | 293.15 | 77578 | -95.5 | -7.0 | | 1607 | 8 | 8.05 | 92 | 7.5 | 41681 | 0.023 | 0 | | 167 | 77411 | -3.47 | -96 | 0.7 | 0% |
| Standard Elbow 90° | 4 | 0.1 | 0.01 | 1 | 0.3 | 0.51 | 140 | 100 | | 68 | 293.15 | 77411 | -96.2 | -7.1 | | 1607 | 8 | 8.05 | 92 | 7.5 | 41681 | 0.023 | 16 | | 2 | 77394 | -3.48 | -96 | 0.1 | 0% |
| Pipe | 4 | 0.1 | 0.01 | 35 | 10.7 | | 140 | 100 | | 68 | 293.15 | 77394 | -96.3 | -7.1 | | 1607 | 8 | 8.05 | 92 | 7.5 | 41681 | 0.023 | 0 | | 73 | 77320 | -3.49 | -97 | 0.3 | 0% |
| Standard Elbow 90° | 4 | 0.1 | 0.01 | 1 | 0.3 | 0.51 | 140 | 100 | | 68 | 293.15 | 77320 | -96.6 | -7.1 | | 1607 | 8 | 8.05 | 92 | 7.5 | 41681 | 0.023 | 16 | | 2 | 77303 | -3.49 | -97 | 0.1 | 0% |
| Pipe (in plant) | 4 | 0.1 | 0.01 | 20 | 6.1 | | 140 | 100 | | 68 | 293.15 | 77303 | -96.7 | -7.1 | | 1607 | 8 | 8.05 | 92 | 7.5 | 41681 | 0.023 | 0 | | 42 | 77261 | -3.49 | -97 | 0.2 | 0% |
| Through Tee | 4 | 0.1 | 0.01 | 1 | 0.3 | 0.34 | 140 | 100 | | 68 | 293.15 | 77261 | -96.8 | -7.1 | | 1607 | 8 | 8.05 | 92 | 7.5 | 41681 | 0.023 | 10 | | 2 | 77248 | -3.50 | -97 | 0.1 | 0% |
| Flow Meter | 4 | 0.1 | 0.01 | 1 | 0.3 | 0.8 | 140 | 100 | | 68 | 293.15 | 77248 | -96.9 | -7.1 | | 1607 | 8 | 8.05 | 92 | 7.5 | 41681 | 0.023 | 25 | | 2 | 77221 | -3.50 | -97 | 0.1 | 0% |
| Ball Valve | 4 | 0.1 | 0.01 | 1 | 0.3 | 0.05 | 140 | 100 | | 68 | 293.15 | 77221 | -97.0 | -7.1 | | 1607 | 8 | 8.05 | 92 | 7.5 | 41681 | 0.023 | 2 | | 2 | 77218 | -3.50 | -97 | 0.0 | 0% |
| Combining Tee | 4 | 0.1 | 0.01 | 5 | 1.5 | | 140 | 100 | | 68 | 293.15 | 77218 | -97.0 | -7.1 | | 1607 | 8 | 8.05 | 92 | 7.5 | 41681 | 0.023 | 0 | 100 | 10 | 77107 | -3.52 | -97 | 0.4 | 0% |

**Omega OU1 (On Site Soils)**
**Full Scale OSS Design**
**Pressure Drop Calculations Summary**

Performed by NLS Date 5/13/2013
Checked by JTB Date 5/14/2013

**Purpose**: size pipe for Well ID: DPE-4 NOTE: PRESSURE LOSS CALCS ARE DONE ASSUMING ACCESS TO TERRAPAVE PROPERTY

Assumption:
Isothermal, change in pressure is less than 10%
No density effects from heating of vapor by fans
No effects from moisture in air (heavier air, more friction etc)
Given only one SVE performance data set exists for each area, all future wells are assumed to perform in the same manner.
All quantities and wells listed include spare capacity for additional wells.

Pipe Size Selected **4** inches
Pressure Entering Manifold **-7.2** in Hg

| Column | (C) | (D) | (E) | (F) | (G) | (H) | (I) | | (J) | (K) | (L) | (M) | (N) | (O) | (P) | (Q) | (R) | (S) | (T) | (U) | (V) | (W) | (X) | (Y) | (Z) | (AA) | (AB) | (AC) | (AD) | (AE) |
|---|---|---|---|---|---|---|---|---|---|---|---|---|---|---|---|---|---|---|---|---|---|---|---|---|---|---|---|---|---|---|
| Item | Pipe ID | | Area A | Length L | | Fitting Loss Coeff K | Flow | | dT (Fan) | Inlet Temperature | | Upstream Pressure | | | Added Static Pressure | Velocity | | Mass Flow | Mass Flow / Area G | | Re | f | Fitting Loss | Equipment Static Loss | Length Losses | Downstream Pressure $P_{out}$ | | | Drop | Pressure Change |
| | (in) | (m) | (m2) | (ft) | (m) | | (acfm) | (scfm) | (deg F) | (deg F) | (K) | (Pa) | (in WG) | (in Hg, gauge) | (in WG) | (fpm) | (m/s) | (lbm / min) | (lbm / ft2 min) | (kg / m2 sec) | | | (Pa) | (Pa) | (Pa) | (Pa) | (psi) | (in WG) | (in WG) | |
| ***From Well to Manifold*** | | | | | | | | | | | | | | | | | | | | | | | | | | | | | | |
| Branch Tee | **4** | 0.1 | 0.01 | **1** | 0.3 | 1.02 | 140 | 100 | | 68 | 293.15 | 77612 | -95.4 | -7.0 | | 1607 | 8 | 8.05 | 92 | 7.5 | 41681 | 0.023 | 31 | | 2 | 77578 | -3.45 | -96 | 0.1 | 0% |
| Pipe | **4** | 0.1 | 0.01 | **120** | 36.6 | | 140 | 100 | | 68 | 293.15 | 77578 | -95.5 | -7.0 | | 1607 | 8 | 8.05 | 92 | 7.5 | 41681 | 0.023 | 0 | | 251 | 77328 | -3.48 | -97 | 1.0 | 0% |
| Standard Elbow 90° | **4** | 0.1 | 0.01 | **1** | 0.3 | 0.51 | 140 | 100 | | 68 | 293.15 | 77328 | -96.6 | -7.1 | | 1607 | 8 | 8.05 | 92 | 7.5 | 41681 | 0.023 | 16 | | 2 | 77310 | -3.49 | -97 | 0.1 | 0% |
| Pipe | **4** | 0.1 | 0.01 | **80** | 24.4 | | 140 | 100 | | 68 | 293.15 | 77310 | -96.6 | -7.1 | | 1607 | 8 | 8.05 | 92 | 7.5 | 41681 | 0.023 | 0 | | 168 | 77142 | -3.51 | -97 | 0.7 | 0% |
| Standard Elbow 90° | **4** | 0.1 | 0.01 | **1** | 0.3 | 0.51 | 140 | 99 | | 68 | 293.15 | 77142 | -97.3 | -7.1 | | 1607 | 8 | 8.05 | 92 | 7.5 | 41681 | 0.023 | 16 | | 2 | 77124 | -3.51 | -97 | 0.1 | 0% |
| Pipe | **4** | 0.1 | 0.01 | **35** | 10.7 | | 140 | 99 | | 68 | 293.15 | 77124 | -97.4 | -7.1 | | 1607 | 8 | 8.05 | 92 | 7.5 | 41681 | 0.023 | 0 | | 74 | 77051 | -3.52 | -98 | 0.3 | 0% |
| Standard Elbow 90° | **4** | 0.1 | 0.01 | **1** | 0.3 | 0.51 | 140 | 99 | | 68 | 293.15 | 77051 | -97.7 | -7.2 | | 1607 | 8 | 8.05 | 92 | 7.5 | 41681 | 0.023 | 16 | | 2 | 77033 | -3.53 | -98 | 0.1 | 0% |
| Pipe (in plant) | **4** | 0.1 | 0.01 | **20** | 6.1 | | 140 | 99 | | 68 | 293.15 | 77033 | -97.7 | -7.2 | | 1607 | 8 | 8.05 | 92 | 7.5 | 41681 | 0.023 | 0 | | 42 | 76991 | -3.53 | -98 | 0.2 | 0% |
| Through Tee | **4** | 0.1 | 0.01 | **1** | 0.3 | 0.34 | 140 | 99 | | 68 | 293.15 | 76991 | -97.9 | -7.2 | | 1607 | 8 | 8.05 | 92 | 7.5 | 41681 | 0.023 | 10 | | 2 | 76978 | -3.54 | -98 | 0.1 | 0% |
| Flow Meter | **4** | 0.1 | 0.01 | **1** | 0.3 | **0.8** | 140 | 99 | | 68 | 293.15 | 76978 | -98.0 | -7.2 | | 1607 | 8 | 8.05 | 92 | 7.5 | 41681 | 0.023 | 25 | | 2 | 76952 | -3.54 | -98 | 0.1 | 0% |
| Ball Valve | **4** | 0.1 | 0.01 | **1** | 0.3 | 0.05 | 140 | 99 | | 68 | 293.15 | 76952 | -98.1 | -7.2 | | 1607 | 8 | 8.05 | 92 | 7.5 | 41681 | 0.023 | 2 | | 2 | 76948 | -3.54 | -98 | 0.0 | 0% |
| Combining Tee | **4** | 0.1 | 0.01 | **5** | 1.5 | | 140 | 99 | | 68 | 293.15 | 76948 | -98.1 | -7.2 | | 1607 | 8 | 8.05 | 92 | 7.5 | 41681 | 0.023 | 0 | 100 | 11 | 76838 | -3.56 | -99 | 0.4 | 0% |

**Omega OU1 (On Site Soils)**
**Full Scale OSS Design**
**Pressure Drop Calculations Summary**

Performed by NLS Date 5/13/2013
Checked by JTB Date 5/14/2013

**Purpose**: size pipe for Well ID: DPE-5 NOTE: PRESSURE LOSS CALCS ARE DONE ASSUMING ACCESS TO TERRAPAVE PROPERTY

Assumption:
Isothermal, change in pressure is less than 10%
No density effects from heating of vapor by fans
No effects from moisture in air (heavier air, more friction etc)
Given only one SVE performance data set exists for each area, all future wells are assumed to perform in the same manner.
All quantities and wells listed include spare capacity for additional wells.

Pipe Size Selected **4** inches
Pressure Entering Manifold **-7.2** in Hg

| Column | (C) | (D) | (E) | (F) | (G) | (H) | (I) | | (J) | (K) | (L) | (M) | (N) | (O) | (P) | (Q) | (R) | (S) | (T) | (U) | (V) | (W) | (X) | (Y) | (Z) | (AA) | (AB) | (AC) | (AD) | (AE) |
|---|---|---|---|---|---|---|---|---|---|---|---|---|---|---|---|---|---|---|---|---|---|---|---|---|---|---|---|---|---|---|
| Item | Pipe ID | | Area A | Length L | | Fitting Loss Coeff K | Flow | | dT (Fan) | Inlet Temperature | | Upstream Pressure | | | Added Static Pressure | Velocity | | Mass Flow | Mass Flow / Area G | | Re | f | Fitting Loss | Equipment Static Loss | Length Losses | Downstream Pressure $P_{out}$ | | | Drop | Pressure Change |
| | (in) | (m) | (m2) | (ft) | (m) | | (acfm) | (scfm) | (deg F) | (deg F) | (K) | (Pa) | (in WG) | (in Hg, gauge) | (in WG) | (fpm) | (m/s) | (lbm / min) | (lbm / ft2 min) | (kg / m2 sec) | | | (Pa) | (Pa) | (Pa) | (Pa) | (psi) | (in WG) | (in WG) | |
| ***From Well to Manifold*** | | | | | | | | | | | | | | | | | | | | | | | | | | | | | | |
| Branch Tee | 4 | 0.1 | 0.01 | 1 | 0.3 | 1.02 | 140 | 100 | | 68 | 293.15 | 77612 | -95.4 | -7.0 | | 1607 | 8 | 8.05 | 92 | 7.5 | 41681 | 0.023 | 31 | | 2 | 77578 | -3.45 | -96 | 0.1 | 0% |
| Pipe | 4 | 0.1 | 0.01 | 60 | 18.3 | | 140 | 100 | | 68 | 293.15 | 77578 | -95.5 | -7.0 | | 1607 | 8 | 8.05 | 92 | 7.5 | 41681 | 0.023 | 0 | | 125 | 77453 | -3.47 | -96 | 0.5 | 0% |
| Standard Elbow 90° | 4 | 0.1 | 0.01 | 1 | 0.3 | 0.51 | 140 | 100 | | 68 | 293.15 | 77453 | -96.1 | -7.0 | | 1607 | 8 | 8.05 | 92 | 7.5 | 41681 | 0.023 | 16 | | 2 | 77435 | -3.47 | -96 | 0.1 | 0% |
| Pipe | 4 | 0.1 | 0.01 | 25 | 7.6 | | 140 | 100 | | 68 | 293.15 | 77435 | -96.1 | -7.1 | | 1607 | 8 | 8.05 | 92 | 7.5 | 41681 | 0.023 | 0 | | 52 | 77383 | -3.48 | -96 | 0.2 | 0% |
| Standard Elbow 90° | 4 | 0.1 | 0.01 | 1 | 0.3 | 0.51 | 140 | 100 | | 68 | 293.15 | 77383 | -96.3 | -7.1 | | 1607 | 8 | 8.05 | 92 | 7.5 | 41681 | 0.023 | 16 | | 2 | 77365 | -3.48 | -96 | 0.1 | 0% |
| Pipe | 4 | 0.1 | 0.01 | 85 | 25.9 | | 140 | 100 | | 68 | 293.15 | 77365 | -96.4 | -7.1 | | 1607 | 8 | 8.05 | 92 | 7.5 | 41681 | 0.023 | 0 | | 178 | 77187 | -3.50 | -97 | 0.7 | 0% |
| Standard Elbow 90° | 4 | 0.1 | 0.01 | 1 | 0.3 | 0.51 | 140 | 99 | | 68 | 293.15 | 77187 | -97.1 | -7.1 | | 1607 | 8 | 8.05 | 92 | 7.5 | 41681 | 0.023 | 16 | | 2 | 77169 | -3.51 | -97 | 0.1 | 0% |
| Pipe (in plant) | 4 | 0.1 | 0.01 | 20 | 6.1 | | 140 | 99 | | 68 | 293.15 | 77169 | -97.2 | -7.1 | | 1607 | 8 | 8.05 | 92 | 7.5 | 41681 | 0.023 | 0 | | 42 | 77127 | -3.51 | -97 | 0.2 | 0% |
| Through Tee | 4 | 0.1 | 0.01 | 1 | 0.3 | 0.34 | 140 | 99 | | 68 | 293.15 | 77127 | -97.4 | -7.1 | | 1607 | 8 | 8.05 | 92 | 7.5 | 41681 | 0.023 | 10 | | 2 | 77115 | -3.52 | -97 | 0.1 | 0% |
| Flow Meter | 4 | 0.1 | 0.01 | 1 | 0.3 | 0.8 | 140 | 99 | | 68 | 293.15 | 77115 | -97.4 | -7.1 | | 1607 | 8 | 8.05 | 92 | 7.5 | 41681 | 0.023 | 25 | | 2 | 77088 | -3.52 | -98 | 0.1 | 0% |
| Ball Valve | 4 | 0.1 | 0.01 | 1 | 0.3 | 0.05 | 140 | 99 | | 68 | 293.15 | 77088 | -97.5 | -7.2 | | 1607 | 8 | 8.05 | 92 | 7.5 | 41681 | 0.023 | 2 | | 2 | 77085 | -3.52 | -98 | 0.0 | 0% |
| Combining Tee | 4 | 0.1 | 0.01 | 5 | 1.5 | | 140 | 99 | | 68 | 293.15 | 77085 | -97.5 | -7.2 | | 1607 | 8 | 8.05 | 92 | 7.5 | 41681 | 0.023 | 0 | 100 | 11 | 76974 | -3.54 | -98 | 0.4 | 0% |

**Omega OU1 (On Site Soils)**
**Full Scale OSS Design**
**Pressure Drop Calculations Summary**

Performed by NLS Date 5/13/2013
Checked by JTB Date 5/14/2013

**Purpose**: size pipe for Well ID: DPE-8 NOTE: PRESSURE LOSS CALCS ARE DONE ASSUMING ACCESS TO TERRAPAVE PROPERTY

Assumption:
Isothermal, change in pressure is less than 10%
No density effects from heating of vapor by fans
No effects from moisture in air (heavier air, more friction etc)
Given only one SVE performance data set exists for each area, all future wells are assumed to perform in the same manner
All quantities and wells listed include spare capacity for additional wells

Pipe Size Selected **4** inches
Pressure Entering Manifold **-7.1** in Hg

| Column | (C) | (D) | (E) | (F) | (G) | (H) | (I) | | (J) | (K) | (L) | (M) | (N) | (O) | (P) | (Q) | (R) | (S) | (T) | (U) | (V) | (W) | (X) | (Y) | (Z) | (AA) | (AB) | (AC) | (AD) | (AE) |
|---|---|---|---|---|---|---|---|---|---|---|---|---|---|---|---|---|---|---|---|---|---|---|---|---|---|---|---|---|---|---|
| Item | Pipe ID | | Area A | Length L | | Fitting Loss Coeff K | Flow | | dT (Fan) | Inlet Temperature | | Upstream Pressure | | | Added Static Pressure | Velocity | | Mass Flow | Mass Flow / Area G | | Re | f | Fitting Loss | Equipment Static Loss | Length Losses | Downstream Pressure | $P_{out}$ | Drop | | Pressure Change |
| | (in) | (m) | (m2) | (ft) | (m) | | (acfm) | (scfm) | (deg F) | (deg F) | (K) | (Pa) | (in WG) | (in Hg, gauge) | (in WG) | (fpm) | (m/s) | (lbm / min) | (lbm / ft2 min) | (kg / m2 sec) | | | (Pa) | (Pa) | (Pa) | (Pa) | (psi) | (in WG) | (in WG) | |
| ***From Well to Manifold*** | | | | | | | | | | | | | | | | | | | | | | | | | | | | | | |
| Branch Tee | 4 | 0.1 | 0.01 | 1 | 0.3 | 1.02 | 140 | 100 | | 68 | 293.15 | 77612 | -95.4 | -7.0 | | 1607 | 8 | 8.05 | 92 | 7.5 | 41681 | 0.023 | 31 | | 2 | 77578 | -3.45 | -96 | 0.1 | 0% |
| Pipe | 4 | 0.1 | 0.01 | 15 | 4.6 | | 140 | 100 | | 68 | 293.15 | 77578 | -95.5 | -7.0 | | 1607 | 8 | 8.05 | 92 | 7.5 | 41681 | 0.023 | 0 | | 31 | 77547 | -3.45 | -96 | 0.1 | 0% |
| Standard Elbow 90° | 4 | 0.1 | 0.01 | 1 | 0.3 | 0.51 | 140 | 100 | | 68 | 293.15 | 77547 | -95.7 | -7.0 | | 1607 | 8 | 8.05 | 92 | 7.5 | 41681 | 0.023 | 16 | | 2 | 77529 | -3.46 | -96 | 0.1 | 0% |
| Pipe | 4 | 0.1 | 0.01 | 35 | 10.7 | | 140 | 100 | | 68 | 293.15 | 77529 | -95.7 | -7.0 | | 1607 | 8 | 8.05 | 92 | 7.5 | 41681 | 0.023 | 0 | | 73 | 77456 | -3.47 | -96 | 0.3 | 0% |
| Standard Elbow 90° | 4 | 0.1 | 0.01 | 1 | 0.3 | 0.51 | 140 | 100 | | 68 | 293.15 | 77456 | -96.0 | -7.0 | | 1607 | 8 | 8.05 | 92 | 7.5 | 41681 | 0.023 | 16 | | 2 | 77439 | -3.47 | -96 | 0.1 | 0% |
| Pipe (in plant) | 4 | 0.1 | 0.01 | 20 | 6.1 | | 140 | 100 | | 68 | 293.15 | 77439 | -96.1 | -7.1 | | 1607 | 8 | 8.05 | 92 | 7.5 | 41681 | 0.023 | 0 | | 42 | 77397 | -3.47 | -96 | 0.2 | 0% |
| Through Tee | 4 | 0.1 | 0.01 | 1 | 0.3 | 0.34 | 140 | 100 | | 68 | 293.15 | 77397 | -96.3 | -7.1 | | 1607 | 8 | 8.05 | 92 | 7.5 | 41681 | 0.023 | 10 | | 2 | 77384 | -3.48 | -96 | 0.1 | 0% |
| Flow Meter | 4 | 0.1 | 0.01 | 1 | 0.3 | 0.8 | 140 | 100 | | 68 | 293.15 | 77384 | -96.3 | -7.1 | | 1607 | 8 | 8.05 | 92 | 7.5 | 41681 | 0.023 | 25 | | 2 | 77358 | -3.48 | -96 | 0.1 | 0% |
| Ball Valve | 4 | 0.1 | 0.01 | 1 | 0.3 | 0.05 | 140 | 100 | | 68 | 293.15 | 77358 | -96.4 | -7.1 | | 1607 | 8 | 8.05 | 92 | 7.5 | 41681 | 0.023 | 2 | | 2 | 77354 | -3.48 | -96 | 0.0 | 0% |
| Combining Tee | 4 | 0.1 | 0.01 | 5 | 1.5 | | 140 | 100 | | 68 | 293.15 | 77354 | -96.5 | -7.1 | | 1607 | 8 | 8.05 | 92 | 7.5 | 41681 | 0.023 | 0 | 100 | 10 | 77243 | -3.50 | -97 | 0.4 | 0% |

**Omega OU1 (On Site Soils)**
**Full Scale OSS Design**
**Pressure Drop Calculations Summary**

Performed by NLS Date 5/13/2013
Checked by JTB Date 5/14/2013

**Purpose**: size pipe for Well ID: DPE-9 NOTE: PRESSURE LOSS CALCS ARE DONE ASSUMING ACCESS TO TERRAPAVE PROPERTY

Assumption:
Isothermal, change in pressure is less than 10%
No density effects from heating of vapor by fans
No effects from moisture in air (heavier air, more friction etc)
Given only one SVE performance data set exists for each area, all future wells are assumed to perform in the same manner
All quantities and wells listed include spare capacity for additional wells

Pipe Size Selected **4** inches
Pressure Entering Manifold **-7.3** in Hg

| Column | (C) | (D) | (E) | (F) | (G) | (H) | (I) | | (J) | (K) | (L) | (M) | (N) | (O) | (P) | (Q) | (R) | (S) | (T) | (U) | (V) | (W) | (X) | (Y) | (Z) | (AA) | (AB) | (AC) | (AD) | (AE) |
|---|---|---|---|---|---|---|---|---|---|---|---|---|---|---|---|---|---|---|---|---|---|---|---|---|---|---|---|---|---|---|
| Item | Pipe ID | | Area A | Length L | | Fitting Loss Coeff K | Flow | | dT (Fan) | Inlet Temperature | | Upstream Pressure | | | Added Static Pressure | Velocity | | Mass Flow | Mass Flow / Area G | | Re | f | Fitting Loss | Equipment Static Loss | Length Losses | Downstream Pressure Drop | | | | Pressure Change |
| | (in) | (m) | (m2) | (ft) | (m) | | (acfm) | (scfm) | (deg F) | (deg F) | (K) | (Pa) | (in WG) | (in Hg, gauge) | (in WG) | (fpm) | (m/s) | (lbm / min) | (lbm / ft2 min) | (kg / m2 sec) | | | (Pa) | (Pa) | (Pa) | (Pa) | $P_{out}$ (psi) | (in WG) | (in WG) | |
| ***From Well to Manifold*** | | | | | | | | | | | | | | | | | | | | | | | | | | | | | | |
| Branch Tee | 4 | 0.1 | 0.01 | 1 | 0.3 | 1.02 | 140 | 100 | | 68 | 293.15 | 77612 | -95.4 | -7.0 | | 1607 | 8 | 8.05 | 92 | 7.5 | 41681 | 0.023 | 31 | | 2 | 77578 | -3.45 | -96 | 0.1 | 0% |
| Pipe | 4 | 0.1 | 0.01 | 35 | 10.7 | | 140 | 100 | | 68 | 293.15 | 77578 | -95.5 | -7.0 | | 1607 | 8 | 8.05 | 92 | 7.5 | 41681 | 0.023 | 0 | | 73 | 77505 | -3.46 | -96 | 0.3 | 0% |
| Standard Elbow 90° | 4 | 0.1 | 0.01 | 1 | 0.3 | 0.51 | 140 | 100 | | 68 | 293.15 | 77505 | -95.8 | -7.0 | | 1607 | 8 | 8.05 | 92 | 7.5 | 41681 | 0.023 | 16 | | 2 | 77488 | -3.46 | -96 | 0.1 | 0% |
| Pipe | 4 | 0.1 | 0.01 | 130 | 39.6 | | 140 | 100 | | 68 | 293.15 | 77488 | -95.9 | -7.0 | | 1607 | 8 | 8.05 | 92 | 7.5 | 41681 | 0.023 | 0 | | 272 | 77215 | -3.50 | -97 | 1.1 | 0% |
| Standard Elbow 90° | 4 | 0.1 | 0.01 | 1 | 0.3 | 0.51 | 140 | 100 | | 68 | 293.15 | 77215 | -97.0 | -7.1 | | 1607 | 8 | 8.05 | 92 | 7.5 | 41681 | 0.023 | 16 | | 2 | 77198 | -3.50 | -97 | 0.1 | 0% |
| Pipe | 4 | 0.1 | 0.01 | 25 | 7.6 | | 140 | 99 | | 68 | 293.15 | 77198 | -97.1 | -7.1 | | 1607 | 8 | 8.05 | 92 | 7.5 | 41681 | 0.023 | 0 | | 52 | 77145 | -3.51 | -97 | 0.2 | 0% |
| Standard Elbow 90° | 4 | 0.1 | 0.01 | 1 | 0.3 | 0.51 | 140 | 99 | | 68 | 293.15 | 77145 | -97.3 | -7.1 | | 1607 | 8 | 8.05 | 92 | 7.5 | 41681 | 0.023 | 16 | | 2 | 77128 | -3.51 | -97 | 0.1 | 0% |
| Pipe | 4 | 0.1 | 0.01 | 85 | 25.9 | | 140 | 99 | | 68 | 293.15 | 77128 | -97.4 | -7.1 | | 1607 | 8 | 8.05 | 92 | 7.5 | 41681 | 0.023 | 0 | | 179 | 76949 | -3.54 | -98 | 0.7 | 0% |
| Standard Elbow 90° | 4 | 0.1 | 0.01 | 1 | 0.3 | 0.51 | 140 | 99 | | 68 | 293.15 | 76949 | -98.1 | -7.2 | | 1607 | 8 | 8.05 | 92 | 7.5 | 41681 | 0.023 | 16 | | 2 | 76931 | -3.54 | -98 | 0.1 | 0% |
| Pipe (in plant) | 4 | 0.1 | 0.01 | 20 | 6.1 | | 140 | 99 | | 68 | 293.15 | 76931 | -98.2 | -7.2 | | 1607 | 8 | 8.05 | 92 | 7.5 | 41681 | 0.023 | 0 | | 42 | 76889 | -3.55 | -98 | 0.2 | 0% |
| Through Tee | 4 | 0.1 | 0.01 | 1 | 0.3 | 0.34 | 140 | 99 | | 68 | 293.15 | 76889 | -98.3 | -7.2 | | 1607 | 8 | 8.05 | 92 | 7.5 | 41681 | 0.023 | 10 | | 2 | 76876 | -3.55 | -98 | 0.1 | 0% |
| Flow Meter | 4 | 0.1 | 0.01 | 1 | 0.3 | 0.8 | 140 | 99 | | 68 | 293.15 | 76876 | -98.4 | -7.2 | | 1607 | 8 | 8.05 | 92 | 7.5 | 41681 | 0.023 | 25 | | 2 | 76850 | -3.55 | -98 | 0.1 | 0% |
| Ball Valve | 4 | 0.1 | 0.01 | 1 | 0.3 | 0.05 | 140 | 99 | | 68 | 293.15 | 76850 | -98.5 | -7.2 | | 1607 | 8 | 8.05 | 92 | 7.5 | 41681 | 0.023 | 2 | | 2 | 76846 | -3.55 | -98 | 0.0 | 0% |
| Combining Tee | 4 | 0.1 | 0.01 | 5 | 1.5 | | 140 | 99 | | 68 | 293.15 | 76846 | -98.5 | -7.2 | | 1607 | 8 | 8.05 | 92 | 7.5 | 41681 | 0.023 | 0 | 100 | 11 | 76736 | -3.57 | -99 | 0.4 | 0% |

**Omega OU1 (On Site Soils)**
**Full Scale OSS Design**
**Pressure Drop Calculations Summary**

Performed by NLS Date 5/13/2013
Checked by JTB Date 5/14/2013

**Purpose**: size pipe for large diameter line from ISVE2 to ISVE1. NOTE: PRESSURE LOSS CALCS ARE DONE ASSUMING ACCESS TO TERRAPAVE PROPERTY

Assumption:
Isothermal, change in pressure is less than 10%
No density effects from heating of vapor by fans
No effects from moisture in air (heavier air, more friction etc)

| | | | |
|---|---|---|---|
| Max Flow | 1700 | scfm | Assume flow from all deep and all new shallow Plant 2 wells |
| | 2436 | acfm | |
| Temperature | 68 | F | |
| | 293 | K | |
| Upstream Vaccum | -7.5 | inches Hg (gauge) | |
| | 22 | inches Hg (absolute) | |
| Pressure | 11 | psia (absolute) | |
| | 0.7 | atm (absolute) | |
| | 75932 | Pa (absolute) | |
| | -102.2 | in WG (gauge) | |
| Molar Volume | 0.032 | m3/mol | |
| | 31.1 | mol/m3 | |
| Air Density | 900.1 | g/m3 | |
| | 0.90 | kg/m3 | |
| | 0.06 | lb/scf | |
| Pipe Size Selected | **12** | inches | |
| Pressure Entering Manifold | **-8.2** | in Hg | |

| Column | (C) | (D) | (E) | (F) | (G) | (H) | (I) | | (J) | (K) | (L) | (M) | (N) | (O) | (P) | (Q) | (R) | (S) | (T) | (U) | (V) | (W) | (X) | (Y) | (Z) | (AA) | (AB) | (AC) | (AD) | (AE) |
|---|---|---|---|---|---|---|---|---|---|---|---|---|---|---|---|---|---|---|---|---|---|---|---|---|---|---|---|---|---|---|
| Item | Pipe ID | | Area A | Length L | | Fitting Loss Coeff K | Flow | | dT (Fan) | Inlet Temperature | | Upstream Pressure | | | Added Static Pressure | Velocity | | Mass Flow | Mass Flow / Area G | | Re | f | Fitting Loss | Equipment Static Loss | Length Losses | Downstream Pressure | $P_{out}$ | Drop | Pressure Change |
| | (in) | (m) | (m2) | (ft) | (m) | | (acfm) | (scfm) | (deg F) | (deg F) | (K) | (Pa) | (in WG) | (in Hg, gauge) | (in WG) | (fpm) | (m/s) | (lbm / min) | (lbm / ft2 min) | (kg / m2 sec) | | | (Pa) | (Pa) | (Pa) | (Pa) | (psi) | (in WG) | (in WG) | |
| ***From Well to Manifold*** | | | | | | | | | | | | | | | | | | | | | | | | | | | | | | |
| Standard Elbow 90° | **12** | 0.3 | 0.07 | **1** | 0.3 | 0.39 | 2436 | 1700 | | 68 | 293.15 | 75932 | -102.2 | -7.5 | | 3102 | 16 | 136.91 | 174 | 14.2 | 236193 | 0.016 | 44 | | 2 | 75886 | -3.69 | -102 | 0.2 | 0% |
| Pipe (in plant) | **12** | 0.3 | 0.07 | **20** | 6.1 | | 2436 | 1699 | | 68 | 293.15 | 75886 | -102.4 | -7.5 | | 3102 | 16 | 136.91 | 174 | 14.2 | 236193 | 0.016 | 0 | | 36 | 75850 | -3.70 | -102 | 0.1 | 0% |
| Standard Elbow 90° | **12** | 0.3 | 0.07 | **1** | 0.3 | 0.39 | 2436 | 1698 | | 68 | 293.15 | 75850 | -102.5 | -7.5 | | 3102 | 16 | 136.91 | 174 | 14.2 | 236193 | 0.016 | 44 | | 2 | 75805 | -3.71 | -103 | 0.2 | 0% |
| Pipe | **12** | 0.3 | 0.07 | **15** | 4.6 | | 2436 | 1697 | | 68 | 293.15 | 75805 | -102.7 | -7.5 | | 3102 | 16 | 136.91 | 174 | 14.2 | 236193 | 0.016 | 0 | | 27 | 75778 | -3.71 | -103 | 0.1 | 0% |
| Standard Elbow 90° | **12** | 0.3 | 0.07 | **1** | 0.3 | 0.39 | 2436 | 1697 | | 68 | 293.15 | 75778 | -102.8 | -7.5 | | 3102 | 16 | 136.91 | 174 | 14.2 | 236193 | 0.016 | 44 | | 2 | 75733 | -3.72 | -103 | 0.2 | 0% |
| Pipe | **12** | 0.3 | 0.07 | **30** | 9.1 | | 2436 | 1696 | | 68 | 293.15 | 75733 | -103.0 | -7.6 | | 3102 | 16 | 136.91 | 174 | 14.2 | 236193 | 0.016 | 0 | | 54 | 75679 | -3.72 | -103 | 0.2 | 0% |
| Standard Elbow 90° | **12** | 0.3 | 0.07 | **1** | 0.3 | 0.39 | 2436 | 1695 | | 68 | 293.15 | 75679 | -103.2 | -7.6 | | 3102 | 16 | 136.91 | 174 | 14.2 | 236193 | 0.016 | 44 | | 2 | 75634 | -3.73 | -103 | 0.2 | 0% |
| Pipe | **12** | 0.3 | 0.07 | **95** | 29.0 | | 2436 | 1694 | | 68 | 293.15 | 75634 | -103.4 | -7.6 | | 3102 | 16 | 136.91 | 174 | 14.2 | 236193 | 0.016 | 0 | | 170 | 75463 | -3.75 | -104 | 0.7 | 0% |
| Standard Elbow 90° | **12** | 0.3 | 0.07 | **1** | 0.3 | 0.39 | 2436 | 1690 | | 68 | 293.15 | 75463 | -104.1 | -7.6 | | 3102 | 16 | 136.91 | 174 | 14.2 | 236193 | 0.016 | 44 | | 2 | 75418 | -3.76 | -104 | 0.2 | 0% |
| Pipe | **12** | 0.3 | 0.07 | **60** | 18.3 | | 2436 | 1689 | | 68 | 293.15 | 75418 | -104.2 | -7.7 | | 3102 | 16 | 136.91 | 174 | 14.2 | 236193 | 0.016 | 0 | | 108 | 75310 | -3.78 | -105 | 0.4 | 0% |
| Standard Elbow 90° | **12** | 0.3 | 0.07 | **1** | 0.3 | 0.39 | 2436 | 1686 | | 68 | 293.15 | 75310 | -104.7 | -7.7 | | 3102 | 16 | 136.91 | 174 | 14.2 | 236193 | 0.016 | 44 | | 2 | 75265 | -3.78 | -105 | 0.2 | 0% |
| Pipe | **12** | 0.3 | 0.07 | **325** | 99.1 | | 2436 | 1685 | | 68 | 293.15 | 75265 | -104.9 | -7.7 | | 3102 | 16 | 136.91 | 174 | 14.2 | 236193 | 0.016 | 0 | | 588 | 74677 | -3.87 | -107 | 2.4 | 1% |
| Standard Elbow 90° | **12** | 0.3 | 0.07 | **1** | 0.3 | 0.39 | 2436 | 1672 | | 68 | 293.15 | 74677 | -107.2 | -7.9 | | 3102 | 16 | 136.91 | 174 | 14.2 | 236193 | 0.016 | 44 | | 2 | 74632 | -3.88 | -107 | 0.2 | 0% |
| Pipe | **12** | 0.3 | 0.07 | **80** | 24.4 | | 2436 | 1671 | | 68 | 293.15 | 74632 | -107.4 | -7.9 | | 3102 | 16 | 136.91 | 174 | 14.2 | 236193 | 0.016 | 0 | | 145 | 74486 | -3.90 | -108 | 0.6 | 0% |
| Standard Elbow 90° | **12** | 0.3 | 0.07 | **1** | 0.3 | 0.39 | 2436 | 1668 | | 68 | 293.15 | 74486 | -108.0 | -7.9 | | 3102 | 16 | 136.91 | 174 | 14.2 | 236193 | 0.016 | 44 | | 2 | 74441 | -3.90 | -108 | 0.2 | 0% |
| Pipe | **12** | 0.3 | 0.07 | **120** | 36.6 | | 2436 | 1667 | | 68 | 293.15 | 74441 | -108.2 | -7.9 | | 3102 | 16 | 136.91 | 174 | 14.2 | 236193 | 0.016 | 0 | | 219 | 74222 | -3.94 | -109 | 0.9 | 0% |
| Standard Elbow 90° | **12** | 0.3 | 0.07 | **1** | 0.3 | 0.39 | 2436 | 1662 | | 68 | 293.15 | 74222 | -109.0 | -8.0 | | 3102 | 16 | 136.91 | 174 | 14.2 | 236193 | 0.016 | 44 | | 2 | 74176 | -3.94 | -109 | 0.2 | 0% |
| Pipe | **12** | 0.3 | 0.07 | **80** | 24.4 | | 2436 | 1661 | | 68 | 293.15 | 74176 | -109.2 | -8.0 | | 3102 | 16 | 136.91 | 174 | 14.2 | 236193 | 0.016 | 0 | | 146 | 74030 | -3.96 | -110 | 0.6 | 0% |
| Standard Elbow 90° | **12** | 0.3 | 0.07 | **1** | 0.3 | 0.39 | 2436 | 1658 | | 68 | 293.15 | 74030 | -109.8 | -8.1 | | 3102 | 16 | 136.91 | 174 | 14.2 | 236193 | 0.016 | 44 | | 2 | 73985 | -3.97 | -110 | 0.2 | 0% |
| Pipe | **12** | 0.3 | 0.07 | **35** | 10.7 | | 2436 | 1657 | | 68 | 293.15 | 73985 | -110.0 | -8.1 | | 3102 | 16 | 136.91 | 174 | 14.2 | 236193 | 0.016 | 0 | | 64 | 73920 | -3.98 | -110 | 0.3 | 0% |
| Standard Elbow 90° | **12** | 0.3 | 0.07 | **1** | 0.3 | 0.39 | 2436 | 1655 | | 68 | 293.15 | 73920 | -110.3 | -8.1 | | 3102 | 16 | 136.91 | 174 | 14.2 | 236193 | 0.016 | 44 | | 2 | 73875 | -3.99 | -110 | 0.2 | 0% |
| Pipe (in plant) | **12** | 0.3 | 0.07 | **20** | 6.1 | | 2436 | 1654 | | 68 | 293.15 | 73875 | -110.4 | -8.1 | | 3102 | 16 | 136.91 | 174 | 14.2 | 236193 | 0.016 | 0 | | 37 | 73838 | -3.99 | -111 | 0.1 | 0% |
| Through Tee | **12** | 0.3 | 0.07 | **1** | 0.3 | 0.26 | 2436 | 1653 | | 68 | 293.15 | 73838 | -110.6 | -8.1 | | 3102 | 16 | 136.91 | 174 | 14.2 | 236193 | 0.016 | 29 | | 2 | 73807 | -4.00 | -111 | 0.1 | 0% |
| Flow Meter | **12** | 0.3 | 0.07 | **1** | 0.3 | **0.8** | 2436 | 1653 | | 68 | 293.15 | 73807 | -110.7 | -8.1 | | 3102 | 16 | 136.91 | 174 | 14.2 | 236193 | 0.016 | 89 | | 2 | 73716 | -4.01 | -111 | 0.4 | 0% |
| Ball Valve | **12** | 0.3 | 0.07 | **1** | 0.3 | 0.04 | 2436 | 1651 | | 68 | 293.15 | 73716 | -111.1 | -8.2 | | 3102 | 16 | 136.91 | 174 | 14.2 | 236193 | 0.016 | 4 | | 2 | 73710 | -4.01 | -111 | 0.0 | 0% |
| Combining Tee | **12** | 0.3 | 0.07 | **5** | 1.5 | | 2436 | 1651 | | 68 | 293.15 | 73710 | -111.1 | -8.2 | | 3102 | 16 | 136.91 | 174 | 14.2 | 236193 | 0.016 | 0 | 100 | 9 | 73601 | -4.03 | -112 | 0.4 | 0% |

**Omega OU1 (On Site Soils)**
**Full Scale OSS Design**
**Pressure drop calculations**

**Explanation of Calculations**
On each scenario tab, the pressure drops for each system configuration are calculated.
One the other tabs, information for each equipment is calculated, read off a fan curve, or pulled from vendor information.
Blue values are data entry, black are formulas or text, and red are critical results or assumptions.

The calculation occurs in the following steps:
1. Characteristics of each source are entered. This includes flow, temperature, absolute pressure. Conversions are made of these parameters for multiple units for reference and for later use.
Molar volumes and air density are calculated using the ideal gas law.
2. Other parameters and constants, like pipe roughness, ideal gas law constant, the molecular weight of air, etc, are also entered near the top of each spreadsheet.
3. Next, information for the runs of pipe are entered. This includes pipe diameter, length of section, and fitting coefficients.
Fitting loss coefficients are taken from multiple locations:

- Manufacturer-provided information (for silencer only)
- Environmental Engineering Reference Manual, P 36-15
- Building Technology, by B. Stien and W. McGuinness, p 1003
- Metcalf and Eddy, Fourth Edition, Page 442-3
- ASHRAE 2005 Handbook, Chapter 35
- CDM Standard K values (from Cameron Hydraulics) - summarized on Pipe Fittings tab, and used for ball valves only

The source of all fitting loss coefficients are documented in a comment for each cell where used.
4. For each section of pipe (i.e. each line), the following calculations are made, in order of columns

Column D: Pipe diameter is converted to meters. Pipe size is determined by trail and error until reasonable pressure losses are observed in subsequent calculations.
Column E: Pipe area is calculated in square meters.
Column G: Length is converted to meters.
Column I: Flow is copied from above, or added from multiple locations where flow meets.
Column J: Estimated temperature increase or decrease from equipment is listed here.
For heat exchangers (HXs) and liquid ring pumps (LRPs), manufacturer performance data are used to provide estimate temperature decreases.
For PD blowers, the following formula is used:

$$T_2 - T_1 = \frac{T_1}{n_c}\left(\left(\frac{P_2}{P_1}\right)^{\frac{k-1}{k}} - 1\right)$$

P and T are temperature and pressures at upstream (1) and downstream (2) locations.
nc is the efficiency of the blower, calculated using flow conditions and manufacturer information
k is the ratio of constant pressure to constant volume heat capacity (1.4 for air)

Column K: This has the temperature from the previous line, plus any increase from column J.
Column L: Temperature is converted to absolute temperature (Kelvin).
Column M: This has the absolute pressure in Pascals from the previous line at the end of the calculation.
Column N: Pressure is converted to inches of water gauge.
Column O: Pressure is converted into inches of mercury gauge.
Column P: The amount of pressure increase required to meet desired discharge pressure is added here.
This manual entry can be interative until the outlet pressure at the bottom of the sheet matches the design output pressure at the top.
Column Q: Velocity (in feet per minute) is calculated by dividing flow by area.
Column R: Velocity is converted to meters per second.
Column S: Mass flow is calculated by multiplying flow by density (density is assumed constant for each section, and then verified).
Separate air densities are assumed for each leg, and before and after the system blower.
Mass flow should remain constant, but minor changes are a result of assuming density is constant, when in reality it is not.
Small changes in density within each leg are responsible for changes in overall mass flow between legs.
Per Environmental Engineering Reference Manual, on Page 17-9, if density changes are < 10%, this calculation is valid. See below.
Column T: Mass flow per unit area is calculated. The benefits of this approach is explained in Environmental Engineering Reference Manual, on Page 17-9.

Column U: Mass flow per unit area is converted into metric units.
Column V: Reynolds number is calculated:

$$\boxed{\mathrm{Re} = \frac{DG}{\mu} = \frac{DG}{\mu g_c}}$$

D = diameter of the pipe in inches (converted to feet)
G = mass per unit area in lbm / ft2 min
u = absolute viscosity of air at 55 deg F
gc = English units conversion factor (32.2 ft*lbm)/(lbf*s^2).

Column W: Moody friction factor is calculated using the Swamee-Jain Approximation:

$$f = \frac{0.25}{[log_{10}(\frac{\epsilon}{3.7D} + \frac{5.74}{Re^{0.9}})]^2}$$

where $f$ is a function of:

- Roughness height, ε (m, ft)
- Pipe diameter, $D$ (m, ft)
- Reynolds number, $Re$ (unitless).

http://en.wikipedia.org/wiki/Darcy_friction_factor_formulae#Swamee-Jain_equation

Column X: Fitting losses are calculated using the fitting loss coefficients (Column H) and multiplying by the velocity pressure. Velocity pressure is calculated as:
VP = (Density x Velocity^2) / 2
Some loss coefficients use upstream conditions, and some use downstream conditions. Deviations from standard formulas are marked with comments.
Column Y: Special losses, from flow through media or valves, are calculated here. This includes the following:
Tees: branch coefficients are taken from Environmental Engineering Reference Manual, on Page 36-16 and -17, and used similarly as in Column W.
Column Z: Losses due to pipe length are calculated. Standard losses for this piping where not found, so these we recalculated as follows form Equation 17.36 in Environmental Engineering Reference Manual.

$$\boxed{P_{in}^2 - P_{out}^2 = \left(\frac{fLG^2RT}{D(MW)g_c}\right)}$$

P = pressure at location noted
f = Moody friction factor
L = Length of pipe
G = Mass flow per unit area
R = universal gas constant
T = absolute temperature
D = pipe diameter
MW = molecular weight of air
gc = English units conversion factor (32.2 ft*lbm)/(lbf*s^2).

The above equation is solved for Pout, and then subtracted from Pin to determine the pressure drop due to pipe length.
Column AA: Downstream pressure is calculated using the formula immediately above, and subtracting losses from columns W and X.
Column AB a Pressure is converted into different units.
Column AD: Total pressure drop is calculated.
Column AE: Relative pressure change is calculated. If pressure change is less than 10%, assumption of incompressible (constant density) flow is OK.
Note: this calculation is not performed on lines with positive displacement (PD) blowers or liquid ring pump (LRP) blowers, as density change will be greater than 10%.
In those cases, the pressure is added with no loss calculation, and the row is left partially empty.

5. This process carries down the sheet through all the piping to the endpoint of the calculation (i.e. the point of discharge).
Anywhere flow is combined, flow-weighted averages of temperature and other parameters are calculated, but minimum pressure from all branches is used.

**Omega OU1 (On Site Soils)**
**Full Scale OSS Design**
**Pressure Drop Calculations Summary**

Performed by JTB Date 10/9/2012
Checked by NLS Date 10/12/2012

Black cells are text or formula results
Blue cells are data-entry parameters
Red cells are critical results or assumptions.

**Purpose**: balance flows into the plant

Assumption:
Isothermal, change in pressure is less than 10%
No density effects from heating of vapor by fans
No effects from moisture in air (heavier air, more friction etc)
Given only one SVE performance data set exists for each area, all future wells are assumed to perform in the same manner.

**Constants**

| | | | |
|---|---|---|---|
| Absolute visocity | **3.82E-07** | lbf s / ft2 at 68 deg F | |
| | 1.82903E-05 | Pa s | |
| Absolute visocity | **5.02E-07** | lbf s / ft2 at 318 deg C | |
| | 2.40359E-05 | Pa s | |
| Specific Roughness | **0.0001** | ft | per ASHRAE for PVC |
| | 0.00003048 | m | |
| MW of air (MW) | **28.9** | g / mol | |
| Gas Constant (R) | 8.31E+03 | m3 Pa / K mol | |
| Gamma | **1.4** | Ratio of constant pressure to constant volume heat capacity | |

| | | ISVE1 | | | | | | | | | | ISVE2 | | | | | | | | | | |
|---|---|---|---|---|---|---|---|---|---|---|---|---|---|---|---|---|---|---|---|---|---|---|
| **Well ID** | | **VE-1S** | **VE-5S** | **VE-6S** | **VE-8S** | **VE-9S** | **VE-10S** | **VE-11S** | **VE-12S** | **VE-14S** | **VE-15S** | **VE-20S** | **VE-21S** | **VE-22S** | **VE-23S** | **VE-24S** | **VE-25S** | **VE-26S** | **VE-27S** | **VE-28S** | **VE-29S** | **VE-30S** |
| Max Flow | scfm | 0 | 0 | 0 | 0 | 0 | 0 | 0 | 0 | 0 | 0 | 100 | 30 | 65 | 50 | 25 | 150 | 220 | 50 | 25 | 35 | 150 |
| | acfm | 0 | 0 | 0 | 0 | 0 | 0 | 0 | 0 | 0 | 0 | 134 | 40 | 87 | 67 | 34 | 202 | 296 | 67 | 34 | 47 | 202 |
| Temperature | F | 68 | 68 | 68 | 68 | 68 | 68 | 68 | 68 | 68 | 68 | 68 | 68 | 68 | 68 | 68 | 68 | 68 | 68 | 68 | 68 | 68 |
| | K | 293 | 293 | 293 | 293 | 293 | 293 | 293 | 293 | 293 | 293 | 293 | 293 | 293 | 293 | 293 | 293 | 293 | 293 | 293 | 293 | 293 |
| Upstream Vaccum | inches Hg (gauge) | 0 | 0 | 0 | 0 | 0 | 0 | 0 | 0 | 0 | 0 | -6 | -6 | -6 | -6 | -6 | -6 | -6 | -6 | -6 | -6 | -6 |
| | inches Hg (absolute) | 30 | 30 | 30 | 30 | 30 | 30 | 30 | 30 | 30 | 30 | 24 | 24 | 24 | 24 | 24 | 24 | 24 | 24 | 24 | 24 | 24 |
| Pressure | psia (absolute) | 15 | 15 | 15 | 15 | 15 | 15 | 15 | 15 | 15 | 15 | 12 | 12 | 12 | 12 | 12 | 12 | 12 | 12 | 12 | 12 | 12 |
| | atm (absolute) | 1.0 | 1.0 | 1.0 | 1.0 | 1.0 | 1.0 | 1.0 | 1.0 | 1.0 | 1.0 | 0.8 | 0.8 | 0.8 | 0.8 | 0.8 | 0.8 | 0.8 | 0.8 | 0.8 | 0.8 | 0.8 |
| | Pa (absolute) | 101314 | 101314 | 101314 | 101314 | 101314 | 101314 | 101314 | 101314 | 101314 | 101314 | 80998 | 80998 | 80998 | 80998 | 80998 | 80998 | 80998 | 80998 | 80998 | 80998 | 80998 |
| | in WG (gauge) | -0.1 | -0.1 | -0.1 | -0.1 | -0.1 | -0.1 | -0.1 | -0.1 | -0.1 | -0.1 | -81.8 | -81.8 | -81.8 | -81.8 | -81.8 | -81.8 | -81.8 | -81.8 | -81.8 | -81.8 | -81.8 |
| Molar Volume | m3/mol | 0.024 | 0.024 | 0.024 | 0.024 | 0.024 | 0.024 | 0.024 | 0.024 | 0.024 | 0.024 | 0.030 | 0.030 | 0.030 | 0.030 | 0.030 | 0.030 | 0.030 | 0.030 | 0.030 | 0.030 | 0.030 |
| | mol/m3 | 41.6 | 41.6 | 41.6 | 41.6 | 41.6 | 41.6 | 41.6 | 41.6 | 41.6 | 41.6 | 33.2 | 33.2 | 33.2 | 33.2 | 33.2 | 33.2 | 33.2 | 33.2 | 33.2 | 33.2 | 33.2 |
| Air Density | g/m3 | 1201.0 | 1201.0 | 1201.0 | 1201.0 | 1201.0 | 1201.0 | 1201.0 | 1201.0 | 1201.0 | 1201.0 | 960.2 | 960.2 | 960.2 | 960.2 | 960.2 | 960.2 | 960.2 | 960.2 | 960.2 | 960.2 | 960.2 |
| | kg/m3 | 1.20 | 1.20 | 1.20 | 1.20 | 1.20 | 1.20 | 1.20 | 1.20 | 1.20 | 1.20 | 0.96 | 0.96 | 0.96 | 0.96 | 0.96 | 0.96 | 0.96 | 0.96 | 0.96 | 0.96 | 0.96 |
| | lb/scf | 0.07 | 0.07 | 0.07 | 0.07 | 0.07 | 0.07 | 0.07 | 0.07 | 0.07 | 0.07 | 0.06 | 0.06 | 0.06 | 0.06 | 0.06 | 0.06 | 0.06 | 0.06 | 0.06 | 0.06 | 0.06 |
| Pipe Size Selected | in | | | | | | | | | | | 4 | 4 | 4 | 4 | 4 | 4 | 4 | 4 | 4 | 4 | 4 |
| Downstream Pressure | inches Hg (gauge) | | | | | | | | | | | -6.5 | -6.1 | -6.1 | -6.1 | -6.1 | -6.3 | -6.3 | -6.1 | -6.1 | -6.1 | -6.4 |
| Blower Sizing | in WG (differential pressure) | - | - | - | - | - | - | - | - | - | - | - | - | - | - | - | - | - | - | - | - | - |
| | inches Hg (differential pressure) | - | - | - | - | - | - | - | - | - | - | - | - | - | - | - | - | - | - | - | - | - |
| Design Outlet Pressure | in WG | - | - | - | - | - | - | - | - | - | - | - | - | - | - | - | - | - | - | - | - | - |

**Omega OU1 (On Site Soils)**
**Full Scale OSS Design**
**Pressure Drop Calculations Summary**

**Purpose**: balance flows into the plant

Black cells are text or formula results
Blue cells are data-entry parameters
Red cells are critical results or assumptions.

Performed by JTB Date 10/9/2012
Checked by NLS Date 10/12/2012

| | | New Wells | | | | | | | | | | | | | | | | | | | | | | | Treatment System | | | |
|---|---|---|---|---|---|---|---|---|---|---|---|---|---|---|---|---|---|---|---|---|---|---|---|---|---|---|---|---|
| **Well ID** | | **VE-31S** | **VE-32S** | **VE-33S** | **VE-34S** | **VE-35S** | **VE-36S** | **VE-37S** | **VE-38S** | **VE-39S** | **VE-40S** | **VE-2D** | **DPE-3** | **DPE-4** | **DPE-5** | **VE-6D** | **VE-7D** | **DPE-8** | **DPE-9** | **VE-10D** | **VE-11D** | **VE-12D** | **VE-13D** | **SPARE CAPACITY** | **Leaving Manifold** | **Entering Train** | **Entering Blower** | **After Blower** |
| Max Flow | scfm | 110 | 110 | 110 | 110 | 110 | 110 | 110 | 110 | 110 | 110 | 0 | 0 | 0 | 0 | 100 | 100 | 0 | 0 | 100 | 100 | 100 | 100 | 300 | **2900** | **2900** | **2900** | **2900** |
| | acfm | 148 | 148 | 148 | 148 | 148 | 148 | 148 | 148 | 148 | 148 | 0 | 0 | 0 | 0 | 140 | 140 | 0 | 0 | 140 | 140 | 140 | 140 | 444 | 4288 | 4288 | 4288 | 4678 |
| Temperature | F | 68 | 68 | 68 | 68 | 68 | 68 | 68 | 68 | 69 | 70 | 68 | 68 | 68 | 68 | 68 | 68 | 68 | 68 | 68 | 68 | 68 | 68 | 68 | 68.12692 | 68.126923 | 68.12692 | 116 |
| | K | 293 | 293 | 293 | 293 | 293 | 293 | 293 | 293 | 294 | 294 | 293 | 293 | 293 | 293 | 293 | 293 | 293 | 293 | 293 | 293 | 293 | 293 | 293 | 293 | 293 | 293 | 320 |
| Upstream Vaccum | inches Hg (gauge) | -6 | -6 | -6 | -6 | -6 | -6 | -6 | -6 | -6 | -6 | 0 | 0 | 0 | 0 | -7 | -7 | 0 | 0 | -7 | -7 | -7 | -7 | -8 | -8 | -8 | -8 | -8 |
| | inches Hg (absolute) | 24 | 24 | 24 | 24 | 24 | 24 | 24 | 24 | 24 | 24 | 30 | 30 | 30 | 30 | 23 | 23 | 30 | 30 | 23 | 23 | 23 | 23 | 22 | 22 | 22 | 22 | 22 |
| Pressure | psia (absolute) | 12 | 12 | 12 | 12 | 12 | 12 | 12 | 12 | 12 | 12 | 15 | 15 | 15 | 15 | 11 | 11 | 15 | 15 | 11 | 11 | 11 | 11 | 11 | 11 | 11 | 11 | 11 |
| | atm (absolute) | 0.8 | 0.8 | 0.8 | 0.8 | 0.8 | 0.8 | 0.8 | 0.8 | 0.8 | 0.8 | 1.0 | 1.0 | 1.0 | 1.0 | 0.8 | 0.8 | 1.0 | 1.0 | 0.8 | 0.8 | 0.8 | 0.8 | 0.7 | 0.7 | 0.7 | 0.7 | 0.7 |
| | Pa (absolute) | 80998 | 80998 | 80998 | 80998 | 80998 | 80998 | 80998 | 80998 | 80998 | 80998 | 101314 | 101314 | 101314 | 101314 | 77612 | 77612 | 101314 | 101314 | 77612 | 77612 | 77612 | 77612 | 73611 | 73611 | 73611 | 73611 | 73611 |
| | in WG (gauge) | -81.8 | -81.8 | -81.8 | -81.8 | -81.8 | -81.8 | -81.8 | -81.8 | -81.8 | -81.8 | -0.1 | -0.1 | -0.1 | -0.1 | -95.4 | -95.4 | -0.1 | -0.1 | -95.4 | -95.4 | -95.4 | -95.4 | -111.5 | -111.5 | -111.5 | -111.5 | -111.5 |
| Molar Volume | m3/mol | 0.030 | 0.030 | 0.030 | 0.030 | 0.030 | 0.030 | 0.030 | 0.030 | 0.030 | 0.030 | 0.024 | 0.024 | 0.024 | 0.024 | 0.031 | 0.031 | 0.024 | 0.024 | 0.031 | 0.031 | 0.031 | 0.031 | 0.033 | 0.033 | 0.033 | 0.033 | 0.036 |
| | mol/m3 | 33.2 | 33.2 | 33.2 | 33.2 | 33.2 | 33.2 | 33.2 | 33.2 | 33.2 | 33.1 | 41.6 | 41.6 | 41.6 | 41.6 | 31.8 | 31.8 | 41.6 | 41.6 | 31.8 | 31.8 | 31.8 | 31.8 | 30.2 | 30.2 | 30.2 | 30.2 | 27.7 |
| Air Density | g/m3 | 960.2 | 960.2 | 960.2 | 960.2 | 960.2 | 960.2 | 960.2 | 960.2 | 958.4 | 956.6 | 1201.0 | 1201.0 | 1201.0 | 1201.0 | 920.1 | 920.1 | 1201.0 | 1201.0 | 920.1 | 920.1 | 920.1 | 920.1 | 872.4 | 872.4 | 872.4 | 872.4 | 799.7 |
| | kg/m3 | 0.96 | 0.96 | 0.96 | 0.96 | 0.96 | 0.96 | 0.96 | 0.96 | 0.96 | 0.96 | 1.20 | 1.20 | 1.20 | 1.20 | 0.92 | 0.92 | 1.20 | 1.20 | 0.92 | 0.92 | 0.92 | 0.92 | 0.87 | 0.87 | 0.87 | 0.87 | 0.80 |
| | lb/scf | 0.06 | 0.06 | 0.06 | 0.06 | 0.06 | 0.06 | 0.06 | 0.06 | 0.06 | 0.06 | 0.07 | 0.07 | 0.07 | 0.07 | 0.06 | 0.06 | 0.07 | 0.07 | 0.06 | 0.06 | 0.06 | 0.06 | 0.05 | 0.05 | 0.05 | 0.05 | 0.05 |
| Pipe Size Selected | in | 3 | 3 | 3 | 3 | 3 | 3 | 3 | 3 | 3 | 3 | | | | | 4 | 4 | | | 4 | 4 | 4 | 4 | | | See System Tab | | |
| Downstream Pressure | inches Hg (gauge) | -7.9 | -8.2 | -7.7 | -7.5 | -7.2 | -7.4 | -7.3 | -6.9 | -7.1 | -6.6 | | | | | -7.3 | -7.3 | | | -7.3 | -7.2 | -7.2 | -7.2 | | - | - | - | - |
| Blower Sizing | in WG (differential pressure) | - | - | - | - | - | - | - | - | - | - | - | - | - | - | - | - | - | - | - | - | - | - | | - | - | 167 | - |
| | inches Hg (differential pressure) | - | - | - | - | - | - | - | - | - | - | - | - | - | - | - | - | - | - | - | - | - | - | | - | - | **12.3** | - |
| Design Outlet Pressure | in WG | - | - | - | - | - | - | - | - | - | - | - | - | - | - | - | - | - | - | - | - | - | - | | - | - | - | **5.4** |

**Omega OU1 (On Site Soils)**
**Full Scale OSS Design**
**Pressure Drop Calculations Summary**

Performed by NLS Date 5/13/2013
Checked by JTB Date 7/30/2013

**Purpose**: Size pipe and blower for Plant 2

Assumption:
Isothermal, change in pressure is less than 10%
No density effects from heating of vapor by fans
No effects from moisture in air (heavier air, more friction etc)
Given only one SVE performance data set exists for each area, all future wells are assumed to perform in the same manner.

| | | |
|---|---|---|
| ACFM through Blower | 4288 | |
| Blower Added Static Pressure | **166.788** | (in WG) (Blower differential Pressure) |
| Air Horsepower | 112.53 | hp |
| Selected Blower brake horsepower | **125** | hp |
| Efficiency | 90% | |
| Heat Exchanger Temp Reduction | **-50** | degrees F |
| Pipe Size Selected | **8** | inches |
| Pressure Leaving Stack | **5.4** | in WG |

| Column | (C) | (D) | (E) | (F) | (G) | (H) | (I) | | (J) | (K) | (L) | (M) | (N) | (O) | (P) | (Q) | (R) | (S) | (T) | (U) | (V) | (W) | (X) | (Y) | (Z) | (AA) | (AB) | (AC) | (AD) | (AE) |
|---|---|---|---|---|---|---|---|---|---|---|---|---|---|---|---|---|---|---|---|---|---|---|---|---|---|---|---|---|---|---|
| Item | Pipe ID | | Area A | Length L | | Fitting Loss Coeff K | Flow | | dT (Fan) | Inlet Temperature | | Upstream Pressure | | | Added Static Pressure | Velocity | | Mass Flow | Mass Flow / Area G | | Re | f | Fitting Loss | Equipment Static Loss | Length Losses | Downstream Pressure | | Drop | Pressure Change |
| | (in) | (m) | (m2) | (ft) | (m) | | (acfm) | (scfm) | (deg F) | (deg F) | (K) | (Pa) | (in WG) | (in Hg, gauge) | (in WG) | (fpm) | (m/s) | (lbm / min) | (lbm / ft2 min) | (kg / m2 sec) | | | (Pa) | (Pa) | (Pa) | (Pa) | $P_{out}$ (psi) | (in WG) | (in WG) | |
| ***From Well to Manifold*** | | | | | | | | | | | | | | | | | | | | | | | | | | | | | | |
| Pipe | **12** | 0.3 | 0.07 | **10** | 3.0 | | 4288 | 2900 | | 68 | 293.22 | 73611 | -112 | -8.2 | | 5460 | 28 | 233.55 | 297 | 24.2 | 402917 | 0.015 | 0 | | 50 | 73561 | -4.03 | -112 | 0.2 | 0% |
| Standard Elbow 90° | **12** | 0.3 | 0.07 | **1** | 0.3 | 0.39 | 4288 | 2899 | | 68 | 293.22 | 73561 | -112 | -8.2 | | 5460 | 28 | 233.55 | 297 | 24.2 | 402917 | 0.015 | 131 | | 5 | 73425 | -4.05 | -112 | 0.5 | 0% |
| Pipe | **12** | 0.3 | 0.07 | **3** | 0.9 | | 4288 | 2893 | | 68 | 293.22 | 73425 | -112 | -8.2 | | 5460 | 28 | 233.55 | 297 | 24.2 | 402917 | 0.015 | 0 | | 15 | 73410 | -4.05 | -112 | 0.1 | 0% |
| Through Tee | **12** | 0.3 | 0.07 | **1** | 0.3 | 0.26 | 4288 | 2893 | | 68 | 293.22 | 73410 | -112 | -8.2 | | 5460 | 28 | 233.55 | 297 | 24.2 | 402917 | 0.015 | 87 | | 5 | 73318 | -4.07 | -113 | 0.4 | 0% |
| Abrupt Expansion | **16** | 0.4 | 0.13 | **1** | 0.3 | 0.191 | 4288 | 2889 | | 68 | 293.22 | 73318 | -113 | -8.3 | | 3071 | 16 | 233.55 | 167 | 13.6 | 302188 | 0.015 | 20 | | 1 | 73296 | -4.07 | -113 | 0.1 | 0% |
| KO Tank | **16** | 0.4 | 0.13 | **10** | 3.0 | | 4288 | 2888 | | 68 | 293.22 | 73296 | -113 | -8.3 | | 3071 | 16 | 233.55 | 167 | 13.6 | 302188 | 0.015 | 0 | | 12 | 73284 | -4.07 | -113 | 0.0 | 0% |
| Abrupt Reduction | **12** | 0.3 | 0.07 | **1** | 0.3 | 0.219 | 4288 | 2888 | | 68 | 293.22 | 73284 | -113 | -8.3 | | 5460 | 28 | 233.55 | 297 | 24.2 | 402917 | 0.015 | 73 | | 5 | 73206 | -4.08 | -113 | 0.3 | 0% |
| Standard Elbow 90° | **12** | 0.3 | 0.07 | **1** | 0.3 | 0.39 | 4288 | 2884 | | 68 | 293.22 | 73186 | -113 | -8.3 | | 5460 | 28 | 233.55 | 297 | 24.2 | 402917 | 0.015 | 131 | | 5 | 73050 | -4.11 | -114 | 0.5 | 0% |
| Pipe | **12** | 0.3 | 0.07 | **4** | 1.2 | | 4288 | 2885 | | 68 | 293.22 | 73206 | -113 | -8.3 | | 5460 | 28 | 233.55 | 297 | 24.2 | 402917 | 0.015 | 0 | | 20 | 73186 | -4.09 | -113 | 0.1 | 0% |
| Flow Meter | **12** | 0.3 | 0.07 | **1** | 0.3 | **0.8** | 4288 | 2878 | | 68 | 293.22 | 73050 | -114 | -8.3 | | 5460 | 28 | 233.55 | 297 | 24.2 | 402917 | 0.015 | 268 | | 5 | 72776 | -4.14 | -115 | 1.1 | 0% |
| Standard Elbow 90° | **12** | 0.3 | 0.07 | **1** | 0.3 | 0.39 | 4288 | 2884 | | 68 | 293.22 | 73186 | -113 | -8.3 | | 5460 | 28 | 233.55 | 297 | 24.2 | 402917 | 0.015 | 131 | | 5 | 73050 | -4.11 | -114 | 0.5 | 0% |
| Pipe | **12** | 0.3 | 0.07 | **4** | 1.2 | | 4288 | 2868 | | 68 | 293.22 | 72776 | -115 | -8.4 | | 5460 | 28 | 233.55 | 297 | 24.2 | 402917 | 0.015 | 0 | | 20 | 72756 | -4.15 | -115 | 0.1 | 0% |
| Abrupt Reduction | **8** | 0.2 | 0.03 | **1** | 0.3 | 0.278 | 4288 | 2878 | | 68 | 293.22 | 73050 | -114 | -8.3 | | 12285 | 62 | 233.55 | 669 | 54.4 | 604376 | 0.015 | 472 | | 38 | 72540 | -4.18 | -116 | 2.0 | 1% |
| Blower | **8** | 0.2 | 0.03 | **0** | 0.0 | | 4288 | 2858 | | 68 | 293.22 | 72540 | -116 | -8.5 | 166.788 | 12285 | 62 | 233.55 | 669 | 54.4 | 604376 | 0.015 | 0 | | 0 | 114085 | 1.85 | 51 | -167.0 | -57% |
| Abrupt Expansion | **8** | 0.2 | 0.03 | **1** | 0.3 | 0 | 3233 | 2858 | 98 | 166 | 347.66 | 114085 | 51 | 3.8 | | 9262 | 47 | 176.07 | 504 | 41.0 | 455641 | 0.015 | 0 | | 17 | 114068 | 1.84 | 51 | 0.1 | 0% |
| Silencer | **8** | 0.2 | 0.03 | | 0.0 | | 3233 | 2858 | | 166 | 347.66 | 114068 | 51 | 3.8 | | 9262 | 47 | 176.07 | 504 | 41.0 | 455641 | 0.015 | 0 | 100 | 0 | 113968 | 1.83 | 51 | 0.4 | 0% |
| Hose | **8** | 0.2 | 0.03 | **10** | 3.0 | | 3233 | 2855 | | 166 | 347.66 | 113968 | 51 | 3.7 | | 9262 | 47 | 176.07 | 504 | 41.0 | 455641 | 0.015 | 0 | | 168 | 113800 | 1.81 | 50 | 0.7 | 0% |
| 90 Bend | **8** | 0.2 | 0.03 | **1** | 0.3 | | 3233 | 2851 | | 166 | 347.66 | 113800 | 50 | 3.7 | | 9262 | 47 | 176.07 | 504 | 41.0 | 455641 | 0.015 | 0 | | 17 | 113783 | 1.80 | 50 | 0.1 | 0% |
| Heat Exchanger | **8** | 0.2 | 0.03 | **1** | 0.3 | | 2975 | 2851 | -50 | 116 | 319.89 | 113783 | 50 | 3.7 | | 8523 | 43 | 162.03 | 464 | 37.8 | 419298 | 0.015 | 0 | 4136 | 13 | 109634 | 1.20 | 33 | 16.7 | 4% |
| Standard Elbow 90° | **8** | 0.2 | 0.03 | **1** | 0.3 | 0.42 | 2975 | 2747 | | 116 | 319.89 | 109634 | 33 | 2.5 | | 8523 | 43 | 162.03 | 464 | 37.8 | 419298 | 0.015 | 343 | | 14 | 109276 | 1.15 | 32 | 1.4 | 0% |
| Hose | **8** | 0.2 | 0.03 | **10** | 3.0 | | 2975 | 2738 | | 116 | 319.89 | 109276 | 32 | 2.3 | | 8523 | 43 | 162.03 | 464 | 37.8 | 419298 | 0.015 | 0 | | 138 | 109139 | 1.13 | 31 | 0.6 | 0% |
| Pipe | **8** | 0.2 | 0.03 | **2** | 0.6 | | 2975 | 2735 | | 116 | 319.89 | 109139 | 31 | 2.3 | | 8523 | 43 | 162.03 | 464 | 37.8 | 419298 | 0.015 | 0 | | 28 | 109111 | 1.13 | 31 | 0.1 | 0% |
| Standard Elbow 45° | **8** | 0.2 | 0.03 | **1** | 0.3 | 0.22 | 2975 | 2734 | | 116 | 319.89 | 109111 | 31 | 2.3 | | 8523 | 43 | 162.03 | 464 | 37.8 | 419298 | 0.015 | 180 | | 14 | 108917 | 1.10 | 30 | 0.8 | 0% |
| Pipe | **8** | 0.2 | 0.03 | **10** | 3.0 | | 2975 | 2729 | | 116 | 319.89 | 108917 | 30 | 2.2 | | 8523 | 43 | 162.03 | 464 | 37.8 | 419298 | 0.015 | 0 | | 138 | 108779 | 1.08 | 30 | 0.6 | 0% |
| Pipe (Hose) | **8** | 0.2 | 0.03 | **15** | 4.6 | | 2975 | 2726 | | 116 | 319.89 | 108779 | 30 | 2.2 | | 8523 | 43 | 162.03 | 464 | 37.8 | 419298 | 0.015 | 0 | | 208 | 108571 | 1.05 | 29 | 0.8 | 0% |
| Standard Elbow 90° | **8** | 0.2 | 0.03 | **1** | 0.3 | 0.42 | 2975 | 2721 | | 116 | 319.89 | 108571 | 29 | 2.1 | | 8523 | 43 | 162.03 | 464 | 37.8 | 419298 | 0.015 | 343 | | 14 | 108214 | 1.00 | 28 | 1.4 | 0% |
| Standard Elbow 90° | **8** | 0.2 | 0.03 | **1** | 0.3 | 0.42 | 2975 | 2712 | | 116 | 319.89 | 108214 | 28 | 2.0 | | 8523 | 43 | 162.03 | 464 | 37.8 | 419298 | 0.015 | 343 | | 14 | 107856 | 0.94 | 26 | 1.4 | 0% |
| Increaser | **16** | 0.4 | 0.13 | **1** | 0.3 | 0.563 | 2975 | 2703 | | 116 | 319.89 | 107856 | 26 | 1.9 | | 2131 | 11 | 162.03 | 116 | 9.4 | 209649 | 0.016 | 29 | | 0 | 107827 | 0.94 | 26 | 0.1 | 0% |
| GAC Vessel - 5000 pounds | **16** | 0.4 | 0.13 | **1** | 0.3 | | 2975 | 2702 | | 116 | 319.89 | 107827 | 26 | 1.9 | | 2131 | 11 | 162.03 | 116 | 9.4 | 209649 | 0.016 | 0 | 622 | 0 | 107205 | 0.85 | 24 | 2.5 | 1% |
| Reducer | **8** | 0.2 | 0.03 | **1** | 0.3 | 0.375 | 2975 | 2686 | | 116 | 319.89 | 107205 | 24 | 1.7 | | 8523 | 43 | 162.03 | 464 | 37.8 | 419298 | 0.015 | 307 | | 14 | 106885 | 0.80 | 22 | 1.3 | 0% |
| Pipe (Hose) | **8** | 0.2 | 0.03 | **60** | 18.3 | | 2975 | 2678 | | 116 | 319.89 | 106885 | 22 | 1.6 | | 8523 | 43 | 162.03 | 464 | 37.8 | 419298 | 0.015 | 0 | | 849 | 106036 | 0.68 | 19 | 3.4 | 1% |
| Standard Elbow 90° | **8** | 0.2 | 0.03 | **1** | 0.3 | 0.42 | 2975 | 2657 | | 116 | 319.89 | 106036 | 19 | 1.4 | | 8523 | 43 | 162.03 | 464 | 37.8 | 419298 | 0.015 | 343 | | 14 | 105678 | 0.63 | 17 | 1.4 | 0% |
| Pipe | **8** | 0.2 | 0.03 | **15** | 4.6 | | 2975 | 2648 | | 116 | 319.89 | 105678 | 17 | 1.3 | | 8523 | 43 | 162.03 | 464 | 37.8 | 419298 | 0.015 | 0 | | 214 | 105464 | 0.60 | 17 | 0.9 | 0% |
| Standard Elbow 90° | **8** | 0.2 | 0.03 | **1** | 0.3 | 0.42 | 2975 | 2643 | | 116 | 319.89 | 105464 | 17 | 1.2 | | 8523 | 43 | 162.03 | 464 | 37.8 | 419298 | 0.015 | 343 | | 14 | 105107 | 0.54 | 15 | 1.4 | 0% |
| Pipe | **8** | 0.2 | 0.03 | **3** | 0.9 | | 2975 | 2634 | | 116 | 319.89 | 105107 | 15 | 1.1 | | 8523 | 43 | 162.03 | 464 | 37.8 | 419298 | 0.015 | 0 | | 43 | 105064 | 0.54 | 15 | 0.2 | 0% |
| Standard Elbow 90° | **8** | 0.2 | 0.03 | **1** | 0.3 | 0.42 | 2975 | 2634 | | 116 | 319.89 | 105107 | 15 | 1.1 | | 8523 | 43 | 162.03 | 464 | 37.8 | 419298 | 0.015 | 343 | | 14 | 104749 | 0.49 | 14 | 1.4 | 0% |
| Increaser | **16** | 0.4 | 0.13 | **1** | 0.3 | 0.563 | 2975 | 2634 | | 116 | 319.89 | 105107 | 15 | 1.1 | | 2131 | 11 | 162.03 | 116 | 9.4 | 209649 | 0.016 | 29 | | 0 | 105077 | 0.54 | 15 | 0.1 | 0% |
| GAC Vessel - 5000 pounds | **16** | 0.4 | 0.13 | **1** | 0.3 | | 2975 | 2633 | | 116 | 319.89 | 105077 | 15 | 1.1 | | 2131 | 11 | 162.03 | 116 | 9.4 | 209649 | 0.016 | 0 | 622 | 0 | 104455 | 0.45 | 13 | 2.5 | 1% |
| Reducer | **8** | 0.2 | 0.03 | **1** | 0.3 | 0.375 | 2975 | 2617 | | 116 | 319.89 | 104455 | 13 | 0.9 | | 8523 | 43 | 162.03 | 464 | 37.8 | 419298 | 0.015 | 307 | | 14 | 104134 | 0.40 | 11 | 1.3 | 0% |
| Piping | **8** | 0.2 | 0.03 | **60** | 18.3 | | 2975 | 2609 | | 116 | 319.89 | 104134 | 11 | 0.8 | | 8523 | 43 | 162.03 | 464 | 37.8 | 419298 | 0.015 | 0 | | 871 | 103263 | 0.28 | 8 | 3.5 | 1% |
| Standard Elbow 90° | **8** | 0.2 | 0.03 | **1** | 0.3 | 0.42 | 2975 | 2588 | | 116 | 319.89 | 103263 | 8 | 0.6 | | 8523 | 43 | 162.03 | 464 | 37.8 | 419298 | 0.015 | 343 | | 15 | 102905 | 0.23 | 6 | 1.4 | 0% |
| Piping - Discharge Stack | **8** | 0.2 | 0.03 | **15** | 4.6 | | 2975 | 2579 | | 116 | 319.89 | 102905 | 6 | 0.5 | | 8523 | 43 | 162.03 | 464 | 37.8 | 419298 | 0.015 | 0 | | 220 | 102685 | 0.19 | 5 | 0.9 | 0% |

**Omega OU1 (On Site Soils)**
**Full Scale OSS Design**
**Pressure Drop Calculations Summary**

Performed by JTB Date 10/9/2012
Checked by NLS Date 10/12/2012

**Purpose**: size pipe for Well ID: VE-20S

Assumption:
Isothermal, change in pressure is less than 10%
No density effects from heating of vapor by fans
No effects from moisture in air (heavier air, more friction etc)
Given only one SVE performance data set exists for each area, all future wells are assumed to perform in the same manner.

Pipe Size Selected **4** inches
Pressure Enterring Manifold **-6.5** in Hg

| Column | (C) | (D) | (E) | (F) | (G) | (H) | (I) | | (J) | (K) | (L) | (M) | (N) | (O) | (P) | (Q) | (R) | (S) | (T) | (U) | (V) | (W) | (X) | (Y) | (Z) | (AA) | (AB) | (AC) | (AD) | (AE) |
|---|---|---|---|---|---|---|---|---|---|---|---|---|---|---|---|---|---|---|---|---|---|---|---|---|---|---|---|---|---|---|
| Item | Pipe ID | | Area A | Length L | | Fitting Loss Coeff K | Flow | | dT (Fan) | Inlet Temperature | | Upstream Pressure | | | Added Static Pressure | Velocity | | Mass Flow | Mass Flow / Area G | | Re | f | Fitting Loss | Equipment Static Loss | Length Losses | Downstream Pressure $P_{out}$ | | Drop | Pressure Change |
| | (in) | (m) | (m2) | (ft) | (m) | | (acfm) | (scfm) | (deg F) | (deg F) | (K) | (Pa) | (in WG) | (in Hg, gauge) | (in WG) | (fpm) | (m/s) | (lbm / min) | (lbm / ft2 min) | (kg / m2 sec) | | | (Pa) | (Pa) | (Pa) | (Pa) | (psi) | (in WG) | (in WG) | |
| ***From Well to Manifold*** | | | | | | | | | | | | | | | | | | | | | | | | | | | | | | |
| Branch Tee | 4 | 0.1 | 0.01 | 1 | 0.3 | 1.02 | 134 | 100 | | 68 | 293.15 | 80998 | -81.8 | -6.0 | | 1540 | 8 | 8.05 | 92 | 7.5 | 41681 | 0.023 | 30 | | 2 | 80966 | -2.96 | -82 | 0.1 | 0% |
| Pipe | 4 | 0.1 | 0.01 | 5 | 1.5 | | 134 | 100 | | 68 | 293.15 | 80998 | -81.8 | -6.0 | | 1540 | 8 | 8.05 | 92 | 7.5 | 41681 | 0.023 | 0 | | 10 | 80988 | -2.95 | -82 | 0.0 | 0% |
| Standard Elbow 90° | 4 | 0.1 | 0.01 | 1 | 0.3 | 0.51 | 134 | 100 | | 68 | 293.15 | 80988 | -81.8 | -6.0 | | 1540 | 8 | 8.05 | 92 | 7.5 | 41681 | 0.023 | 15 | | 2 | 80971 | -2.96 | -82 | 0.1 | 0% |
| Pipe | 4 | 0.1 | 0.01 | 52 | 15.8 | | 134 | 100 | | 68 | 293.15 | 80971 | -81.9 | -6.0 | | 1540 | 8 | 8.05 | 92 | 7.5 | 41681 | 0.023 | 0 | | 104 | 80867 | -2.97 | -82 | 0.4 | 0% |
| Standard Elbow 90° | 4 | 0.1 | 0.01 | 1 | 0.3 | 0.51 | 134 | 100 | | 68 | 293.15 | 80867 | -82.3 | -6.0 | | 1540 | 8 | 8.05 | 92 | 7.5 | 41681 | 0.023 | 15 | | 2 | 80850 | -2.97 | -82 | 0.1 | 0% |
| Pipe | 4 | 0.1 | 0.01 | 132 | 40.2 | | 134 | 100 | | 68 | 293.15 | 80850 | -82.4 | -6.0 | | 1540 | 8 | 8.05 | 92 | 7.5 | 41681 | 0.023 | 0 | | 265 | 80585 | -3.01 | -83 | 1.1 | 0% |
| Standard Elbow 90° | 4 | 0.1 | 0.01 | 1 | 0.3 | 0.51 | 134 | 100 | | 68 | 293.15 | 80585 | -83.5 | -6.1 | | 1540 | 8 | 8.05 | 92 | 7.5 | 41681 | 0.023 | 15 | | 2 | 80568 | -3.01 | -84 | 0.1 | 0% |
| Pipe | 4 | 0.1 | 0.01 | 42 | 12.8 | | 134 | 99 | | 68 | 293.15 | 80568 | -83.5 | -6.1 | | 1540 | 8 | 8.05 | 92 | 7.5 | 41681 | 0.023 | 0 | | 84 | 80483 | -3.03 | -84 | 0.3 | 0% |
| Standard Elbow 90° | 4 | 0.1 | 0.01 | 1 | 0.3 | 0.51 | 134 | 99 | | 68 | 293.15 | 80483 | -83.9 | -6.2 | | 1540 | 8 | 8.05 | 92 | 7.5 | 41681 | 0.023 | 15 | | 2 | 80467 | -3.03 | -84 | 0.1 | 0% |
| Pipe | 4 | 0.1 | 0.01 | 72 | 21.9 | | 134 | 99 | | 68 | 293.15 | 80467 | -83.9 | -6.2 | | 1540 | 8 | 8.05 | 92 | 7.5 | 41681 | 0.023 | 0 | | 145 | 80321 | -3.05 | -85 | 0.6 | 0% |
| Standard Elbow 90° | 4 | 0.1 | 0.01 | 1 | 0.3 | 0.51 | 134 | 99 | | 68 | 293.15 | 80321 | -84.5 | -6.2 | | 1540 | 8 | 8.05 | 92 | 7.5 | 41681 | 0.023 | 15 | | 2 | 80304 | -3.05 | -85 | 0.1 | 0% |
| Pipe | 4 | 0.1 | 0.01 | 71 | 21.6 | | 134 | 99 | | 68 | 293.15 | 80304 | -84.6 | -6.2 | | 1540 | 8 | 8.05 | 92 | 7.5 | 41681 | 0.023 | 0 | | 143 | 80161 | -3.07 | -85 | 0.6 | 0% |
| Standard Elbow 45° | 4 | 0.1 | 0.01 | 1 | 0.3 | 0.27 | 134 | 99 | | 68 | 293.15 | 80161 | -85.2 | -6.2 | | 1540 | 8 | 8.05 | 92 | 7.5 | 41681 | 0.023 | 8 | | 2 | 80151 | -3.08 | -85 | 0.0 | 0% |
| Pipe | 4 | 0.1 | 0.01 | 110 | 33.5 | | 134 | 99 | | 68 | 293.15 | 80151 | -85.2 | -6.3 | | 1540 | 8 | 8.05 | 92 | 7.5 | 41681 | 0.023 | 0 | | 223 | 79929 | -3.11 | -86 | 0.9 | 0% |
| Standard Elbow 45° | 4 | 0.1 | 0.01 | 1 | 0.3 | 0.27 | 134 | 99 | | 68 | 293.15 | 79929 | -86.1 | -6.3 | | 1540 | 8 | 8.05 | 92 | 7.5 | 41681 | 0.023 | 8 | | 2 | 79919 | -3.11 | -86 | 0.0 | 0% |
| Pipe | 4 | 0.1 | 0.01 | 115 | 35.1 | | 134 | 99 | | 68 | 293.15 | 79919 | -86.1 | -6.3 | | 1540 | 8 | 8.05 | 92 | 7.5 | 41681 | 0.023 | 0 | | 233 | 79685 | -3.14 | -87 | 0.9 | 0% |
| Standard Elbow 90° | 4 | 0.1 | 0.01 | 1 | 0.3 | 0.51 | 134 | 98 | | 68 | 293.15 | 79685 | -87.1 | -6.4 | | 1540 | 8 | 8.05 | 92 | 7.5 | 41681 | 0.023 | 15 | | 2 | 79668 | -3.15 | -87 | 0.1 | 0% |
| Pipe (in plant - ISVE2) | 4 | 0.1 | 0.01 | 20 | 6.1 | | 134 | 98 | | 68 | 293.15 | 79668 | -87.1 | -6.4 | | 1540 | 8 | 8.05 | 92 | 7.5 | 41681 | 0.023 | 0 | | 41 | 79628 | -3.15 | -87 | 0.2 | 0% |
| Through Tee | 4 | 0.1 | 0.01 | 1 | 0.3 | 0.34 | 134 | 98 | | 68 | 293.15 | 79628 | -87.3 | -6.4 | | 1540 | 8 | 8.05 | 92 | 7.5 | 41681 | 0.023 | 10 | | 2 | 79616 | -3.15 | -87 | 0.0 | 0% |
| Flow Meter | 4 | 0.1 | 0.01 | 1 | 0.3 | 0.8 | 134 | 98 | | 68 | 293.15 | 79616 | -87.4 | -6.4 | | 1540 | 8 | 8.05 | 92 | 7.5 | 41681 | 0.023 | 23 | | 2 | 79590 | -3.16 | -87 | 0.1 | 0% |
| Ball Valve | 4 | 0.1 | 0.01 | 1 | 0.3 | 0.05 | 134 | 98 | | 68 | 293.15 | 79590 | -87.5 | -6.4 | | 1540 | 8 | 8.05 | 92 | 7.5 | 41681 | 0.023 | 1 | | 2 | 79587 | -3.16 | -87 | 0.0 | 0% |
| Combining Tee | 4 | 0.1 | 0.01 | 5 | 1.5 | | 134 | 98 | | 68 | 293.15 | 79587 | -87.5 | -6.4 | | 1540 | 8 | 8.05 | 92 | 7.5 | 41681 | 0.023 | 0 | 100 | 10 | 79476 | -3.17 | -88 | 0.4 | 0% |

**Omega OU1 (On Site Soils)**
**Full Scale OSS Design**
**Pressure Drop Calculations Summary**

Performed by JTB Date 10/9/2012
Checked by NLS Date 10/12/2012

**Purpose**: size pipe for Well ID: VE-21S

Assumption:
Isothermal, change in pressure is less than 10%
No density effects from heating of vapor by fans
No effects from moisture in air (heavier air, more friction etc)
Given only one SVE performance data set exists for each area, all future wells are assumed to perform in the same manner.

Pipe Size Selected **4** inches
Pressure Enterring Manifold **-6.1** in Hg

| Column | (C) | (D) | (E) | (F) | (G) | (H) | (I) | | (J) | (K) | (L) | (M) | (N) | (O) | (P) | (Q) | (R) | (S) | (T) | (U) | (V) | (W) | (X) | (Y) | (Z) | (AA) | (AB) | (AC) | (AD) | (AE) |
|---|---|---|---|---|---|---|---|---|---|---|---|---|---|---|---|---|---|---|---|---|---|---|---|---|---|---|---|---|---|---|
| Item | Pipe ID | | Area A | Length L | | Fitting Loss Coeff K | Flow | | dT (Fan) | Inlet Temperature | | Upstream Pressure | | | Added Static Pressure | Velocity | | Mass Flow | Mass Flow / Area G | | Re | f | Fitting Loss | Equipment Static Loss | Length Losses | Downstream Pressure $P_{out}$ | | | Drop | Pressure Change |
| | (in) | (m) | (m2) | (ft) | (m) | | (acfm) | (scfm) | (deg F) | (deg F) | (K) | (Pa) | (in WG) | (in Hg, gauge) | (in WG) | (fpm) | (m/s) | (lbm / min) | (lbm / ft2 min) | (kg / m2 sec) | | | (Pa) | (Pa) | (Pa) | (Pa) | (psi) | (in WG) | (in WG) | |
| ***From Well to Manifold*** | | | | | | | | | | | | | | | | | | | | | | | | | | | | | | |
| Branch Tee | 4 | 0.1 | 0.01 | 1 | 0.3 | 1.02 | 40 | 30 | | 68 | 293.15 | 80998 | -81.8 | -6.0 | | 462 | 2 | 2.42 | 28 | 2.3 | 12504 | 0.030 | 3 | | 0 | 80995 | -2.95 | -82 | 0.0 | 0% |
| Pipe | 4 | 0.1 | 0.01 | 5 | 1.5 | | 40 | 30 | | 68 | 293.15 | 80998 | -81.8 | -6.0 | | 462 | 2 | 2.42 | 28 | 2.3 | 12504 | 0.030 | 0 | | 1 | 80997 | -2.95 | -82 | 0.0 | 0% |
| Standard Elbow 90° | 4 | 0.1 | 0.01 | 1 | 0.3 | 0.51 | 40 | 30 | | 68 | 293.15 | 80997 | -81.8 | -6.0 | | 462 | 2 | 2.42 | 28 | 2.3 | 12504 | 0.030 | 1 | | 0 | 80995 | -2.95 | -82 | 0.0 | 0% |
| Pipe | 4 | 0.1 | 0.01 | 27 | 8.2 | | 40 | 30 | | 68 | 293.15 | 80995 | -81.8 | -6.0 | | 462 | 2 | 2.42 | 28 | 2.3 | 12504 | 0.030 | 0 | | 6 | 80989 | -2.95 | -82 | 0.0 | 0% |
| Standard Elbow 90° | 4 | 0.1 | 0.01 | 1 | 0.3 | 0.51 | 40 | 30 | | 68 | 293.15 | 80989 | -81.8 | -6.0 | | 462 | 2 | 2.42 | 28 | 2.3 | 12504 | 0.030 | 1 | | 0 | 80987 | -2.95 | -82 | 0.0 | 0% |
| Pipe | 4 | 0.1 | 0.01 | 83 | 25.3 | | 40 | 30 | | 68 | 293.15 | 80987 | -81.8 | -6.0 | | 462 | 2 | 2.42 | 28 | 2.3 | 12504 | 0.030 | 0 | | 20 | 80967 | -2.96 | -82 | 0.1 | 0% |
| Standard Elbow 90° | 4 | 0.1 | 0.01 | 1 | 0.3 | 0.51 | 40 | 30 | | 68 | 293.15 | 80967 | -81.9 | -6.0 | | 462 | 2 | 2.42 | 28 | 2.3 | 12504 | 0.030 | 1 | | 0 | 80966 | -2.96 | -82 | 0.0 | 0% |
| Pipe | 4 | 0.1 | 0.01 | 57 | 17.4 | | 40 | 30 | | 68 | 293.15 | 80966 | -81.9 | -6.0 | | 462 | 2 | 2.42 | 28 | 2.3 | 12504 | 0.030 | 0 | | 13 | 80952 | -2.96 | -82 | 0.1 | 0% |
| Standard Elbow 90° | 4 | 0.1 | 0.01 | 1 | 0.3 | 0.51 | 40 | 30 | | 68 | 293.15 | 80952 | -82.0 | -6.0 | | 462 | 2 | 2.42 | 28 | 2.3 | 12504 | 0.030 | 1 | | 0 | 80951 | -2.96 | -82 | 0.0 | 0% |
| Pipe | 4 | 0.1 | 0.01 | 165 | 50.3 | | 40 | 30 | | 68 | 293.15 | 80951 | -82.0 | -6.0 | | 462 | 2 | 2.42 | 28 | 2.3 | 12504 | 0.030 | 0 | | 39 | 80912 | -2.96 | -82 | 0.2 | 0% |
| Standard Elbow 90° | 4 | 0.1 | 0.01 | 1 | 0.3 | 0.51 | 40 | 30 | | 68 | 293.15 | 80912 | -82.1 | -6.0 | | 462 | 2 | 2.42 | 28 | 2.3 | 12504 | 0.030 | 1 | | 0 | 80910 | -2.96 | -82 | 0.0 | 0% |
| Pipe | 4 | 0.1 | 0.01 | 20 | 6.1 | | 40 | 30 | | 68 | 293.15 | 80910 | -82.2 | -6.0 | | 462 | 2 | 2.42 | 28 | 2.3 | 12504 | 0.030 | 0 | | 5 | 80906 | -2.97 | -82 | 0.0 | 0% |
| Standard Elbow 90° | 4 | 0.1 | 0.01 | 1 | 0.3 | 0.51 | 40 | 30 | | 68 | 293.15 | 80906 | -82.2 | -6.0 | | 462 | 2 | 2.42 | 28 | 2.3 | 12504 | 0.030 | 1 | | 0 | 80904 | -2.97 | -82 | 0.0 | 0% |
| Pipe (in plant - ISVE2) | 4 | 0.1 | 0.01 | 20 | 6.1 | | 40 | 30 | | 68 | 293.15 | 80904 | -82.2 | -6.0 | | 462 | 2 | 2.42 | 28 | 2.3 | 12504 | 0.030 | 0 | | 5 | 80899 | -2.97 | -82 | 0.0 | 0% |
| Through Tee | 4 | 0.1 | 0.01 | 1 | 0.3 | 0.34 | 40 | 30 | | 68 | 293.15 | 80899 | -82.2 | -6.0 | | 462 | 2 | 2.42 | 28 | 2.3 | 12504 | 0.030 | 1 | | 0 | 80898 | -2.97 | -82 | 0.0 | 0% |
| Flow Meter | 4 | 0.1 | 0.01 | 1 | 0.3 | 0.8 | 40 | 30 | | 68 | 293.15 | 80898 | -82.2 | -6.0 | | 462 | 2 | 2.42 | 28 | 2.3 | 12504 | 0.030 | 2 | | 0 | 80896 | -2.97 | -82 | 0.0 | 0% |
| Ball Valve | 4 | 0.1 | 0.01 | 1 | 0.3 | 0.05 | 40 | 30 | | 68 | 293.15 | 80896 | -82.2 | -6.0 | | 462 | 2 | 2.42 | 28 | 2.3 | 12504 | 0.030 | 0 | | 0 | 80896 | -2.97 | -82 | 0.0 | 0% |
| Combining Tee | 4 | 0.1 | 0.01 | 5 | 1.5 | | 40 | 30 | | 68 | 293.15 | 80896 | -82.2 | -6.0 | | 462 | 2 | 2.42 | 28 | 2.3 | 12504 | 0.030 | 0 | 100 | 1 | 80794 | -2.98 | -83 | 0.4 | 0% |

**Omega OU1 (On Site Soils)**
**Full Scale OSS Design**
**Pressure Drop Calculations Summary**

Performed by JTB Date 10/9/2012
Checked by NLS Date 10/12/2012

**Purpose**: size pipe for Well ID: VE-22S

Assumption:
Isothermal, change in pressure is less than 10%
No density effects from heating of vapor by fans
No effects from moisture in air (heavier air, more friction etc)
Given only one SVE performance data set exists for each area, all future wells are assumed to perform in the same manner.

Pipe Size Selected **4** inches
Pressure Enterring Manifold **-6.1** in Hg

| Column | (C) | (D) | (E) | (F) | (G) | (H) | (I) | | (J) | (K) | (L) | (M) | (N) | (O) | (P) | (Q) | (R) | (S) | (T) | (U) | (V) | (W) | (X) | (Y) | (Z) | (AA) | (AB) | (AC) | (AD) | (AE) |
|---|---|---|---|---|---|---|---|---|---|---|---|---|---|---|---|---|---|---|---|---|---|---|---|---|---|---|---|---|---|---|
| Item | Pipe ID | | Area A | Length L | | Fitting Loss Coeff K | Flow | | dT (Fan) | Inlet Temperature | | Upstream Pressure | | | Added Static Pressure | Velocity | | Mass Flow | Mass Flow / Area G | | Re | f | Fitting Loss | Equipment Static Loss | Length Losses | Downstream Pressure $P_{out}$ | | | Drop | Pressure Change |
| | (in) | (m) | (m2) | (ft) | (m) | | (acfm) | (scfm) | (deg F) | (deg F) | (K) | (Pa) | (in WG) | (in Hg, gauge) | (in WG) | (fpm) | (m/s) | (lbm / min) | (lbm / ft2 min) | (kg / m2 sec) | | | (Pa) | (Pa) | (Pa) | (Pa) | (psi) | (in WG) | (in WG) | |
| ***From Well to Manifold*** | | | | | | | | | | | | | | | | | | | | | | | | | | | | | | |
| Branch Tee | **4** | 0.1 | 0.01 | **1** | 0.3 | 1.02 | 87 | 65 | | 68 | 293.15 | 80998 | -82 | -6.0 | | 1001 | 5 | 5.23 | 60 | 4.9 | 27093 | 0.025 | 13 | | 1 | 80984 | -2.95 | -82 | 0.1 | 0% |
| Pipe | **4** | 0.1 | 0.01 | **5** | 1.5 | | 87 | 65 | | 68 | 293.15 | 80998 | -82 | -6.0 | | 1001 | 5 | 5.23 | 60 | 4.9 | 27093 | 0.025 | 0 | | 5 | 80993 | -2.95 | -82 | 0.0 | 0% |
| Standard Elbow 90° | **4** | 0.1 | 0.01 | **1** | 0.3 | 0.51 | 87 | 65 | | 68 | 293.15 | 80998 | -82 | -6.0 | | 1001 | 5 | 5.23 | 60 | 4.9 | 27093 | 0.025 | 6 | | 1 | 80991 | -2.95 | -82 | 0.0 | 0% |
| Pipe | **4** | 0.1 | 0.01 | **57** | 17.4 | | 87 | 65 | | 68 | 293.15 | 80991 | -82 | -6.0 | | 1001 | 5 | 5.23 | 60 | 4.9 | 27093 | 0.025 | 0 | | 53 | 80938 | -2.96 | -82 | 0.2 | 0% |
| Standard Elbow 90° | **4** | 0.1 | 0.01 | **1** | 0.3 | 0.51 | 87 | 65 | | 68 | 293.15 | 80938 | -82 | -6.0 | | 1001 | 5 | 5.23 | 60 | 4.9 | 27093 | 0.025 | 6 | | 1 | 80931 | -2.96 | -82 | 0.0 | 0% |
| Pipe | **4** | 0.1 | 0.01 | **165** | 50.3 | | 87 | 65 | | 68 | 293.15 | 80931 | -82 | -6.0 | | 1001 | 5 | 5.23 | 60 | 4.9 | 27093 | 0.025 | 0 | | 153 | 80778 | -2.98 | -83 | 0.6 | 0% |
| Standard Elbow 90° | **4** | 0.1 | 0.01 | **1** | 0.3 | 0.51 | 87 | 65 | | 68 | 293.15 | 80778 | -83 | -6.1 | | 1001 | 5 | 5.23 | 60 | 4.9 | 27093 | 0.025 | 6 | | 1 | 80771 | -2.99 | -83 | 0.0 | 0% |
| Pipe | **4** | 0.1 | 0.01 | **20** | 6.1 | | 87 | 65 | | 68 | 293.15 | 80771 | -83 | -6.1 | | 1001 | 5 | 5.23 | 60 | 4.9 | 27093 | 0.025 | 0 | | 19 | 80752 | -2.99 | -83 | 0.1 | 0% |
| Standard Elbow 90° | **4** | 0.1 | 0.01 | **1** | 0.3 | 0.51 | 87 | 65 | | 68 | 293.15 | 80752 | -83 | -6.1 | | 1001 | 5 | 5.23 | 60 | 4.9 | 27093 | 0.025 | 6 | | 1 | 80745 | -2.99 | -83 | 0.0 | 0% |
| Pipe (in plant - ISVE2) | **4** | 0.1 | 0.01 | **20** | 6.1 | | 87 | 65 | | 68 | 293.15 | 80745 | -83 | -6.1 | | 1001 | 5 | 5.23 | 60 | 4.9 | 27093 | 0.025 | 0 | | 19 | 80727 | -2.99 | -83 | 0.1 | 0% |
| Through Tee | **4** | 0.1 | 0.01 | **1** | 0.3 | 0.34 | 87 | 65 | | 68 | 293.15 | 80727 | -83 | -6.1 | | 1001 | 5 | 5.23 | 60 | 4.9 | 27093 | 0.025 | 4 | | 1 | 80721 | -2.99 | -83 | 0.0 | 0% |
| Flow Meter | **4** | 0.1 | 0.01 | **1** | 0.3 | **0.8** | 87 | 65 | | 68 | 293.15 | 80721 | -83 | -6.1 | | 1001 | 5 | 5.23 | 60 | 4.9 | 27093 | 0.025 | 10 | | 1 | 80711 | -2.99 | -83 | 0.0 | 0% |
| Ball Valve | **4** | 0.1 | 0.01 | **1** | 0.3 | 0.05 | 87 | 65 | | 68 | 293.15 | 80711 | -83 | -6.1 | | 1001 | 5 | 5.23 | 60 | 4.9 | 27093 | 0.025 | 1 | | 1 | 80709 | -2.99 | -83 | 0.0 | 0% |
| Combining Tee | **4** | 0.1 | 0.01 | **5** | 1.5 | | 87 | 65 | | 68 | 293.15 | 80709 | -83 | -6.1 | | 1001 | 5 | 5.23 | 60 | 4.9 | 27093 | 0.025 | 0 | 100 | 5 | 80604 | -3.01 | -83 | 0.4 | 0% |

**Omega OU1 (On Site Soils)**
**Full Scale OSS Design**
**Pressure Drop Calculations Summary**

Performed by JTB Date 10/9/2012
Checked by NLS Date 10/12/2012

**Purpose**: size pipe for Well ID: VE-23S

Assumption:
Isothermal, change in pressure is less than 10%
No density effects from heating of vapor by fans
No effects from moisture in air (heavier air, more friction etc)
Given only one SVE performance data set exists for each area, all future wells are assumed to perform in the same manner.

Pipe Size Selected **4** inches
Pressure Enterring Manifold **-6.1** in Hg

| Column | (C) | (D) | (E) | (F) | (G) | (H) | (I) | | (J) | (K) | (L) | (M) | (N) | (O) | (P) | (Q) | (R) | (S) | (T) | (U) | (V) | (W) | (X) | (Y) | (Z) | (AA) | (AB) | (AC) | (AD) | (AE) |
|---|---|---|---|---|---|---|---|---|---|---|---|---|---|---|---|---|---|---|---|---|---|---|---|---|---|---|---|---|---|---|
| Item | Pipe ID | | Area A | Length L | | Fitting Loss Coeff K | Flow | | dT (Fan) | Inlet Temperature | | Upstream Pressure | | | Added Static Pressure | Velocity | | Mass Flow | Mass Flow / Area G | | Re | f | Fitting Loss | Equipment Static Loss | Length Losses | Downstream Pressure $P_{out}$ | | | Drop | Pressure Change |
| | (in) | (m) | (m2) | (ft) | (m) | | (acfm) | (scfm) | (deg F) | (deg F) | (K) | (Pa) | (in WG) | (in Hg, gauge) | (in WG) | (fpm) | (m/s) | (lbm / min) | (lbm / ft2 min) | (kg / m2 sec) | | | (Pa) | (Pa) | (Pa) | (Pa) | (psi) | (in WG) | (in WG) | |
| ***From Well to Manifold*** | | | | | | | | | | | | | | | | | | | | | | | | | | | | | | |
| Branch Tee | 4 | 0.1 | 0.01 | 1 | 0.3 | 1.02 | 67 | 50 | | 68 | 293.15 | 80998 | -81.8 | -6.0 | | 770 | 4 | 4.03 | 46 | 3.8 | 20841 | 0.026 | 7 | | 1 | 80990 | -2.95 | -82 | 0.0 | 0% |
| Pipe | 4 | 0.1 | 0.01 | 5 | 1.5 | | 67 | 50 | | 68 | 293.15 | 80998 | -81.8 | -6.0 | | 770 | 4 | 4.03 | 46 | 3.8 | 20841 | 0.026 | 0 | | 3 | 80995 | -2.95 | -82 | 0.0 | 0% |
| Standard Elbow 90° | 4 | 0.1 | 0.01 | 1 | 0.3 | 0.51 | 67 | 50 | | 68 | 293.15 | 80995 | -81.8 | -6.0 | | 770 | 4 | 4.03 | 46 | 3.8 | 20841 | 0.026 | 4 | | 1 | 80991 | -2.95 | -82 | 0.0 | 0% |
| Pipe | 4 | 0.1 | 0.01 | 100 | 30.5 | | 67 | 50 | | 68 | 293.15 | 80991 | -81.8 | -6.0 | | 770 | 4 | 4.03 | 46 | 3.8 | 20841 | 0.026 | 0 | | 58 | 80933 | -2.96 | -82 | 0.2 | 0% |
| Standard Elbow 45° | 4 | 0.1 | 0.01 | 1 | 0.3 | 0.27 | 67 | 50 | | 68 | 293.15 | 80933 | -82.1 | -6.0 | | 770 | 4 | 4.03 | 46 | 3.8 | 20841 | 0.026 | 2 | | 1 | 80930 | -2.96 | -82 | 0.0 | 0% |
| Pipe | 4 | 0.1 | 0.01 | 115 | 35.1 | | 67 | 50 | | 68 | 293.15 | 80930 | -82.1 | -6.0 | | 770 | 4 | 4.03 | 46 | 3.8 | 20841 | 0.026 | 0 | | 67 | 80863 | -2.97 | -82 | 0.3 | 0% |
| Standard Elbow 90° | 4 | 0.1 | 0.01 | 1 | 0.3 | 0.51 | 67 | 50 | | 68 | 293.15 | 80863 | -82.3 | -6.0 | | 770 | 4 | 4.03 | 46 | 3.8 | 20841 | 0.026 | 4 | | 1 | 80859 | -2.97 | -82 | 0.0 | 0% |
| Pipe (in plant - ISVE2) | 4 | 0.1 | 0.01 | 20 | 6.1 | | 67 | 50 | | 68 | 293.15 | 80859 | -82.4 | -6.0 | | 770 | 4 | 4.03 | 46 | 3.8 | 20841 | 0.026 | 0 | | 12 | 80847 | -2.97 | -82 | 0.0 | 0% |
| Through Tee | 4 | 0.1 | 0.01 | 1 | 0.3 | 0.34 | 67 | 50 | | 68 | 293.15 | 80847 | -82.4 | -6.0 | | 770 | 4 | 4.03 | 46 | 3.8 | 20841 | 0.026 | 2 | | 1 | 80844 | -2.97 | -82 | 0.0 | 0% |
| Flow Meter | 4 | 0.1 | 0.01 | 1 | 0.3 | 0.8 | 67 | 50 | | 68 | 293.15 | 80844 | -82.4 | -6.0 | | 770 | 4 | 4.03 | 46 | 3.8 | 20841 | 0.026 | 6 | | 1 | 80838 | -2.98 | -82 | 0.0 | 0% |
| Ball Valve | 4 | 0.1 | 0.01 | 1 | 0.3 | 0.05 | 67 | 50 | | 68 | 293.15 | 80838 | -82.4 | -6.0 | | 770 | 4 | 4.03 | 46 | 3.8 | 20841 | 0.026 | 0 | | 1 | 80837 | -2.98 | -82 | 0.0 | 0% |
| Combining Tee | 4 | 0.1 | 0.01 | 5 | 1.5 | | 67 | 50 | | 68 | 293.15 | 80837 | -82.4 | -6.1 | | 770 | 4 | 4.03 | 46 | 3.8 | 20841 | 0.026 | 0 | 100 | 3 | 80734 | -2.99 | -83 | 0.4 | 0% |

**Omega OU1 (On Site Soils)**
**Full Scale OSS Design**
**Pressure Drop Calculations Summary**

Performed by JTB Date 10/9/2012
Checked by NLS Date 10/12/2012

**Purpose**: size pipe for Well ID: VE-24S

Assumption:
Isothermal, change in pressure is less than 10%
No density effects from heating of vapor by fans
No effects from moisture in air (heavier air, more friction etc)
Given only one SVE performance data set exists for each area, all future wells are assumed to perform in the same manner.

Pipe Size Selected **4** inches
Pressure Enterring Manifold **-6.1** in Hg

| Column | (C) | (D) | (E) | (F) | (G) | (H) | (I) | | (J) | (K) | (L) | (M) | (N) | (O) | (P) | (Q) | (R) | (S) | (T) | (U) | (V) | (W) | (X) | (Y) | (Z) | (AA) | (AB) | (AC) | (AD) | (AE) |
|---|---|---|---|---|---|---|---|---|---|---|---|---|---|---|---|---|---|---|---|---|---|---|---|---|---|---|---|---|---|---|
| Item | Pipe ID | | Area A | Length L | | Fitting Loss Coeff K | Flow | | dT (Fan) | Inlet Temperature | | Upstream Pressure | | | Added Static Pressure | Velocity | | Mass Flow | Mass Flow / Area G | | Re | f | Fitting Loss | Equipment Static Loss | Length Losses | Downstream Pressure $P_{out}$ | | Drop | | Pressure Change |
| | (in) | (m) | (m2) | (ft) | (m) | | (acfm) | (scfm) | (deg F) | (deg F) | (K) | (Pa) | (in WG) | (in Hg, gauge) | (in WG) | (fpm) | (m/s) | (lbm / min) | (lbm / ft2 min) | (kg / m2 sec) | | | (Pa) | (Pa) | (Pa) | (Pa) | (psi) | (in WG) | (in WG) | |
| ***From Well to Manifold*** | | | | | | | | | | | | | | | | | | | | | | | | | | | | | | |
| Branch Tee | 4 | 0.1 | 0.01 | 1 | 0.3 | 1.02 | 34 | 25 | | 68 | 293.15 | 80998 | -81.8 | -6.0 | | 385 | 2 | 2.01 | 23 | 1.9 | 10420 | 0.031 | 2 | | 0 | 80996 | -2.95 | -82 | 0.0 | 0% |
| Pipe | 4 | 0.1 | 0.01 | 5 | 1.5 | | 34 | 25 | | 68 | 293.15 | 80998 | -81.8 | -6.0 | | 385 | 2 | 2.01 | 23 | 1.9 | 10420 | 0.031 | 0 | | 1 | 80997 | -2.95 | -82 | 0.0 | 0% |
| Standard Elbow 90° | 4 | 0.1 | 0.01 | 1 | 0.3 | 0.51 | 34 | 25 | | 68 | 293.15 | 80997 | -81.8 | -6.0 | | 385 | 2 | 2.01 | 23 | 1.9 | 10420 | 0.031 | 1 | | 0 | 80996 | -2.95 | -82 | 0.0 | 0% |
| Pipe | 4 | 0.1 | 0.01 | 72 | 21.9 | | 34 | 25 | | 68 | 293.15 | 80996 | -81.8 | -6.0 | | 385 | 2 | 2.01 | 23 | 1.9 | 10420 | 0.031 | 0 | | 12 | 80983 | -2.95 | -82 | 0.0 | 0% |
| Standard Elbow 90° | 4 | 0.1 | 0.01 | 1 | 0.3 | 0.51 | 34 | 25 | | 68 | 293.15 | 80983 | -81.9 | -6.0 | | 385 | 2 | 2.01 | 23 | 1.9 | 10420 | 0.031 | 1 | | 0 | 80982 | -2.95 | -82 | 0.0 | 0% |
| Pipe | 4 | 0.1 | 0.01 | 71 | 21.6 | | 34 | 25 | | 68 | 293.15 | 80982 | -81.9 | -6.0 | | 385 | 2 | 2.01 | 23 | 1.9 | 10420 | 0.031 | 0 | | 12 | 80970 | -2.96 | -82 | 0.0 | 0% |
| Standard Elbow 45° | 4 | 0.1 | 0.01 | 1 | 0.3 | 0.27 | 34 | 25 | | 68 | 293.15 | 80970 | -81.9 | -6.0 | | 385 | 2 | 2.01 | 23 | 1.9 | 10420 | 0.031 | 0 | | 0 | 80970 | -2.96 | -82 | 0.0 | 0% |
| Pipe | 4 | 0.1 | 0.01 | 110 | 33.5 | | 34 | 25 | | 68 | 293.15 | 80970 | -81.9 | -6.0 | | 385 | 2 | 2.01 | 23 | 1.9 | 10420 | 0.031 | 0 | | 19 | 80951 | -2.96 | -82 | 0.1 | 0% |
| Standard Elbow 45° | 4 | 0.1 | 0.01 | 1 | 0.3 | 0.27 | 34 | 25 | | 68 | 293.15 | 80951 | -82.0 | -6.0 | | 385 | 2 | 2.01 | 23 | 1.9 | 10420 | 0.031 | 0 | | 0 | 80950 | -2.96 | -82 | 0.0 | 0% |
| Pipe | 4 | 0.1 | 0.01 | 115 | 35.1 | | 34 | 25 | | 68 | 293.15 | 80950 | -82.0 | -6.0 | | 385 | 2 | 2.01 | 23 | 1.9 | 10420 | 0.031 | 0 | | 20 | 80930 | -2.96 | -82 | 0.1 | 0% |
| Standard Elbow 90° | 4 | 0.1 | 0.01 | 1 | 0.3 | 0.51 | 34 | 25 | | 68 | 293.15 | 80930 | -82.1 | -6.0 | | 385 | 2 | 2.01 | 23 | 1.9 | 10420 | 0.031 | 1 | | 0 | 80929 | -2.96 | -82 | 0.0 | 0% |
| Pipe (in plant - ISVE2) | 4 | 0.1 | 0.01 | 20 | 6.1 | | 34 | 25 | | 68 | 293.15 | 80929 | -82.1 | -6.0 | | 385 | 2 | 2.01 | 23 | 1.9 | 10420 | 0.031 | 0 | | 3 | 80926 | -2.96 | -82 | 0.0 | 0% |
| Through Tee | 4 | 0.1 | 0.01 | 1 | 0.3 | 0.34 | 34 | 25 | | 68 | 293.15 | 80926 | -82.1 | -6.0 | | 385 | 2 | 2.01 | 23 | 1.9 | 10420 | 0.031 | 1 | | 0 | 80925 | -2.96 | -82 | 0.0 | 0% |
| Flow Meter | 4 | 0.1 | 0.01 | 1 | 0.3 | 0.8 | 34 | 25 | | 68 | 293.15 | 80925 | -82.1 | -6.0 | | 385 | 2 | 2.01 | 23 | 1.9 | 10420 | 0.031 | 1 | | 0 | 80923 | -2.96 | -82 | 0.0 | 0% |
| Ball Valve | 4 | 0.1 | 0.01 | 1 | 0.3 | 0.05 | 34 | 25 | | 68 | 293.15 | 80923 | -82.1 | -6.0 | | 385 | 2 | 2.01 | 23 | 1.9 | 10420 | 0.031 | 0 | | 0 | 80923 | -2.96 | -82 | 0.0 | 0% |
| Combining Tee | 4 | 0.1 | 0.01 | 5 | 1.5 | | 34 | 25 | | 68 | 293.15 | 80923 | -82.1 | -6.0 | | 385 | 2 | 2.01 | 23 | 1.9 | 10420 | 0.031 | 0 | 100 | 1 | 80822 | -2.98 | -83 | 0.4 | 0% |

**Omega OU1 (On Site Soils)**
**Full Scale OSS Design**
**Pressure Drop Calculations Summary**

Performed by JTB Date 10/9/2012
Checked by NLS Date 10/12/2012

**Purpose**: size pipe for Well ID: VE-25S

Assumption:
Isothermal, change in pressure is less than 10%
No density effects from heating of vapor by fans
No effects from moisture in air (heavier air, more friction etc)
Given only one SVE performance data set exists for each area, all future wells are assumed to perform in the same manner.

Pipe Size Selected **4** inches
Pressure Enterring Manifold **-6.3** in Hg

| Column | (C) | (D) | (E) | (F) | (G) | (H) | (I) | | (J) | (K) | (L) | (M) | (N) | (O) | (P) | (Q) | (R) | (S) | (T) | (U) | (V) | (W) | (X) | (Y) | (Z) | (AA) | (AB) | (AC) | (AD) | (AE) |
|---|---|---|---|---|---|---|---|---|---|---|---|---|---|---|---|---|---|---|---|---|---|---|---|---|---|---|---|---|---|---|
| Item | Pipe ID | | Area A | Length L | | Fitting Loss Coeff K | Flow | | dT (Fan) | Inlet Temperature | | Upstream Pressure | | | Added Static Pressure | Velocity | | Mass Flow | Mass Flow / Area G | | Re | f | Fitting Loss | Equipment Static Loss | Length Losses | Downstream Pressure $P_{out}$ | | Drop | Pressure Change |
| | (in) | (m) | (m2) | (ft) | (m) | | (acfm) | (scfm) | (deg F) | (deg F) | (K) | (Pa) | (in WG) | (in Hg, gauge) | (in WG) | (fpm) | (m/s) | (lbm / min) | (lbm / ft2 min) | (kg / m2 sec) | | | (Pa) | (Pa) | (Pa) | (Pa) | (psi) | (in WG) | (in WG) | |
| ***From Well to Manifold*** | | | | | | | | | | | | | | | | | | | | | | | | | | | | | | |
| Branch Tee | **4** | 0.1 | 0.01 | **1** | 0.3 | 1.02 | 202 | 150 | | 68 | 293.15 | 80998 | -81.8 | -6.0 | | 2309 | 12 | 12.08 | 138 | 11.3 | 62522 | 0.021 | 67 | | 4 | 80926 | -2.96 | -82 | 0.3 | 0% |
| Pipe | **4** | 0.1 | 0.01 | **5** | 1.5 | | 202 | 150 | | 68 | 293.15 | 80998 | -81.8 | -6.0 | | 2309 | 12 | 12.08 | 138 | 11.3 | 62522 | 0.021 | 0 | | 21 | 80977 | -2.96 | -82 | 0.1 | 0% |
| Standard Elbow 90° | **4** | 0.1 | 0.01 | **1** | 0.3 | 0.51 | 202 | 150 | | 68 | 293.15 | 80977 | -81.9 | -6.0 | | 2309 | 12 | 12.08 | 138 | 11.3 | 62522 | 0.021 | 34 | | 4 | 80939 | -2.96 | -82 | 0.2 | 0% |
| Pipe | **4** | 0.1 | 0.01 | **25** | 7.6 | | 202 | 150 | | 68 | 293.15 | 80939 | -82.0 | -6.0 | | 2309 | 12 | 12.08 | 138 | 11.3 | 62522 | 0.021 | 0 | | 104 | 80835 | -2.98 | -82 | 0.4 | 0% |
| Standard Elbow 90° | **4** | 0.1 | 0.01 | **1** | 0.3 | 0.51 | 202 | 150 | | 68 | 293.15 | 80835 | -82.5 | -6.1 | | 2309 | 12 | 12.08 | 138 | 11.3 | 62522 | 0.021 | 34 | | 4 | 80797 | -2.98 | -83 | 0.2 | 0% |
| Pipe | **4** | 0.1 | 0.01 | **23** | 7.0 | | 202 | 150 | | 68 | 293.15 | 80797 | -82.6 | -6.1 | | 2309 | 12 | 12.08 | 138 | 11.3 | 62522 | 0.021 | 0 | | 96 | 80700 | -3.00 | -83 | 0.4 | 0% |
| Standard Elbow 90° | **4** | 0.1 | 0.01 | **1** | 0.3 | 0.51 | 202 | 149 | | 68 | 293.15 | 80700 | -83.0 | -6.1 | | 2309 | 12 | 12.08 | 138 | 11.3 | 62522 | 0.021 | 34 | | 4 | 80663 | -3.00 | -83 | 0.2 | 0% |
| Pipe | **4** | 0.1 | 0.01 | **115** | 35.1 | | 202 | 149 | | 68 | 293.15 | 80663 | -83.1 | -6.1 | | 2309 | 12 | 12.08 | 138 | 11.3 | 62522 | 0.021 | 0 | | 483 | 80179 | -3.07 | -85 | 1.9 | 1% |
| Standard Elbow 90° | **4** | 0.1 | 0.01 | **1** | 0.3 | 0.51 | 202 | 149 | | 68 | 293.15 | 80179 | -85.1 | -6.2 | | 2309 | 12 | 12.08 | 138 | 11.3 | 62522 | 0.021 | 34 | | 4 | 80141 | -3.08 | -85 | 0.2 | 0% |
| Pipe (in plant - ISVE2) | **4** | 0.1 | 0.01 | **20** | 6.1 | | 202 | 148 | | 68 | 293.15 | 80141 | -85.2 | -6.3 | | 2309 | 12 | 12.08 | 138 | 11.3 | 62522 | 0.021 | 0 | | 84 | 80057 | -3.09 | -86 | 0.3 | 0% |
| Through Tee | **4** | 0.1 | 0.01 | **1** | 0.3 | 0.34 | 202 | 148 | | 68 | 293.15 | 80057 | -85.6 | -6.3 | | 2309 | 12 | 12.08 | 138 | 11.3 | 62522 | 0.021 | 22 | | 4 | 80030 | -3.09 | -86 | 0.1 | 0% |
| Flow Meter | **4** | 0.1 | 0.01 | **1** | 0.3 | **0.8** | 202 | 148 | | 68 | 293.15 | 80030 | -85.7 | -6.3 | | 2309 | 12 | 12.08 | 138 | 11.3 | 62522 | 0.021 | 53 | | 4 | 79973 | -3.10 | -86 | 0.2 | 0% |
| Ball Valve | **4** | 0.1 | 0.01 | **1** | 0.3 | 0.05 | 202 | 148 | | 68 | 293.15 | 79973 | -85.9 | -6.3 | | 2309 | 12 | 12.08 | 138 | 11.3 | 62522 | 0.021 | 3 | | 4 | 79966 | -3.10 | -86 | 0.0 | 0% |
| Combining Tee | **4** | 0.1 | 0.01 | **5** | 1.5 | | 202 | 148 | | 68 | 293.15 | 79966 | -86.0 | -6.3 | | 2309 | 12 | 12.08 | 138 | 11.3 | 62522 | 0.021 | 0 | 100 | 21 | 79845 | -3.12 | -86 | 0.5 | 0% |

**Omega OU1 (On Site Soils)**
**Full Scale OSS Design**
**Pressure Drop Calculations Summary**

Performed by JTB Date 10/9/2012
Checked by NLS Date 10/12/2012

**Purpose**: size pipe for Well ID: VE-26S

Assumption:
Isothermal, change in pressure is less than 10%
No density effects from heating of vapor by fans
No effects from moisture in air (heavier air, more friction etc)
Given only one SVE performance data set exists for each area, all future wells are assumed to perform in the same manner.

Pipe Size Selected **4** inches
Pressure Enterring Manifold **-6.3** in Hg

| Column | (C) | (D) | (E) | (F) | (G) | (H) | (I) | | (J) | (K) | (L) | (M) | (N) | (O) | (P) | (Q) | (R) | (S) | (T) | (U) | (V) | (W) | (X) | (Y) | (Z) | (AA) | (AB) | (AC) | (AD) | (AE) |
|---|---|---|---|---|---|---|---|---|---|---|---|---|---|---|---|---|---|---|---|---|---|---|---|---|---|---|---|---|---|---|
| Item | Pipe ID | | Area A | Length L | | Fitting Loss Coeff K | Flow | | dT (Fan) | Inlet Temperature | | Upstream Pressure | | | Added Static Pressure | Velocity | | Mass Flow | Mass Flow / Area G | | Re | f | Fitting Loss | Equipment Static Loss | Length Losses | Downstream Pressure $P_{out}$ | | Drop | Pressure Change |
| | (in) | (m) | (m2) | (ft) | (m) | | (acfm) | (scfm) | (deg F) | (deg F) | (K) | (Pa) | (in WG) | (in Hg, gauge) | (in WG) | (fpm) | (m/s) | (lbm / min) | (lbm / ft2 min) | (kg / m2 sec) | | | (Pa) | (Pa) | (Pa) | (Pa) | (psi) | (in WG) | (in WG) | |
| ***From Well to Manifold*** | | | | | | | | | | | | | | | | | | | | | | | | | | | | | | |
| Branch Tee | **4** | 0.1 | 0.01 | **1** | 0.3 | 1.02 | 296 | 220 | | 68 | 293.15 | 80998 | -81.8 | -6.0 | | 3387 | 17 | 17.72 | 203 | 16.5 | 91698 | 0.020 | 145 | | 8 | 80844 | -2.97 | -82 | 0.6 | 0% |
| Pipe | **4** | 0.1 | 0.01 | **20** | 6.1 | | 296 | 220 | | 68 | 293.15 | 80844 | -82.4 | -6.0 | | 3387 | 17 | 17.72 | 203 | 16.5 | 91698 | 0.020 | 0 | | 169 | 80675 | -3.00 | -83 | 0.7 | 0% |
| Standard Elbow 90° | **4** | 0.1 | 0.01 | **1** | 0.3 | 0.51 | 296 | 219 | | 68 | 293.15 | 80675 | -83.1 | -6.1 | | 3387 | 17 | 17.72 | 203 | 16.5 | 91698 | 0.020 | 72 | | 8 | 80594 | -3.01 | -83 | 0.3 | 0% |
| Pipe | **4** | 0.1 | 0.01 | **20** | 6.1 | | 296 | 219 | | 68 | 293.15 | 80594 | -83.4 | -6.1 | | 3387 | 17 | 17.72 | 203 | 16.5 | 91698 | 0.020 | 0 | | 169 | 80425 | -3.04 | -84 | 0.7 | 0% |
| Standard Elbow 90° | **4** | 0.1 | 0.01 | **1** | 0.3 | 0.51 | 296 | 218 | | 68 | 293.15 | 80425 | -84.1 | -6.2 | | 3387 | 17 | 17.72 | 203 | 16.5 | 91698 | 0.020 | 72 | | 8 | 80344 | -3.05 | -84 | 0.3 | 0% |
| Pipe (in plant - ISVE2) | **4** | 0.1 | 0.01 | **20** | 6.1 | | 296 | 218 | | 68 | 293.15 | 80344 | -84.4 | -6.2 | | 3387 | 17 | 17.72 | 203 | 16.5 | 91698 | 0.020 | 0 | | 170 | 80174 | -3.07 | -85 | 0.7 | 0% |
| Through Tee | **4** | 0.1 | 0.01 | **1** | 0.3 | 0.34 | 296 | 218 | | 68 | 293.15 | 80174 | -85.1 | -6.2 | | 3387 | 17 | 17.72 | 203 | 16.5 | 91698 | 0.020 | 48 | | 9 | 80117 | -3.08 | -85 | 0.2 | 0% |
| Flow Meter | **4** | 0.1 | 0.01 | **1** | 0.3 | **0.8** | 296 | 218 | | 68 | 293.15 | 80117 | -85.3 | -6.3 | | 3387 | 17 | 17.72 | 203 | 16.5 | 91698 | 0.020 | 114 | | 9 | 79995 | -3.10 | -86 | 0.5 | 0% |
| Ball Valve | **4** | 0.1 | 0.01 | **1** | 0.3 | 0.05 | 296 | 217 | | 68 | 293.15 | 79995 | -85.8 | -6.3 | | 3387 | 17 | 17.72 | 203 | 16.5 | 91698 | 0.020 | 7 | | 9 | 79979 | -3.10 | -86 | 0.1 | 0% |
| Combining Tee | **4** | 0.1 | 0.01 | **5** | 1.5 | | 296 | 217 | | 68 | 293.15 | 79979 | -85.9 | -6.3 | | 3387 | 17 | 17.72 | 203 | 16.5 | 91698 | 0.020 | 0 | 100 | 43 | 79837 | -3.12 | -86 | 0.6 | 0% |

**Omega OU1 (On Site Soils)**
**Full Scale OSS Design**
**Pressure Drop Calculations Summary**

Performed by JTB Date 10/9/2012
Checked by NLS Date 10/12/2012

**Purpose**: size pipe for Well ID: VE-27S

Assumption:
Isothermal, change in pressure is less than 10%
No density effects from heating of vapor by fans
No effects from moisture in air (heavier air, more friction etc)
Given only one SVE performance data set exists for each area, all future wells are assumed to perform in the same manner.

Pipe Size Selected **4** inches
Pressure Enterring Manifold **-6.1** in Hg

| Column | (C) | (D) | (E) | (F) | (G) | (H) | (I) | | (J) | (K) | (L) | (M) | (N) | (O) | (P) | (Q) | (R) | (S) | (T) | (U) | (V) | (W) | (X) | (Y) | (Z) | (AA) | (AB) | (AC) | (AD) | (AE) |
|---|---|---|---|---|---|---|---|---|---|---|---|---|---|---|---|---|---|---|---|---|---|---|---|---|---|---|---|---|---|---|
| Item | Pipe ID | | Area A | Length L | | Fitting Loss Coeff K | Flow | | dT (Fan) | Inlet Temperature | | Upstream Pressure | | | Added Static Pressure | Velocity | | Mass Flow | Mass Flow / Area G | | Re | f | Fitting Loss | Equipment Static Loss | Length Losses | Downstream Pressure $P_{out}$ | | Drop | Pressure Change |
| | (in) | (m) | (m2) | (ft) | (m) | | (acfm) | (scfm) | (deg F) | (deg F) | (K) | (Pa) | (in WG) | (in Hg, gauge) | (in WG) | (fpm) | (m/s) | (lbm / min) | (lbm / ft2 min) | (kg / m2 sec) | | | (Pa) | (Pa) | (Pa) | (Pa) | (psi) | (in WG) | (in WG) | |
| ***From Well to Manifold*** | | | | | | | | | | | | | | | | | | | | | | | | | | | | | | |
| Branch Tee | 4 | 0.1 | 0.01 | 1 | 0.3 | 1.02 | 67 | 50 | | 68 | 293.15 | 80998 | -81.8 | -6.0 | | 770 | 4 | 4.03 | 46 | 3.8 | 20841 | 0.026 | 7 | | 1 | 80990 | -2.95 | -82 | 0.0 | 0% |
| Pipe | 4 | 0.1 | 0.01 | 5 | 1.5 | | 67 | 50 | | 68 | 293.15 | 80998 | -81.8 | -6.0 | | 770 | 4 | 4.03 | 46 | 3.8 | 20841 | 0.026 | 0 | | 3 | 80995 | -2.95 | -82 | 0.0 | 0% |
| Standard Elbow 90° | 4 | 0.1 | 0.01 | 1 | 0.3 | 0.51 | 67 | 50 | | 68 | 293.15 | 80995 | -81.8 | -6.0 | | 770 | 4 | 4.03 | 46 | 3.8 | 20841 | 0.026 | 4 | | 1 | 80991 | -2.95 | -82 | 0.0 | 0% |
| Pipe | 4 | 0.1 | 0.01 | 175 | 53.3 | | 67 | 50 | | 68 | 293.15 | 80991 | -81.8 | -6.0 | | 770 | 4 | 4.03 | 46 | 3.8 | 20841 | 0.026 | 0 | | 101 | 80889 | -2.97 | -82 | 0.4 | 0% |
| Standard Elbow 90° | 4 | 0.1 | 0.01 | 1 | 0.3 | 0.51 | 67 | 50 | | 68 | 293.15 | 80889 | -82.2 | -6.0 | | 770 | 4 | 4.03 | 46 | 3.8 | 20841 | 0.026 | 4 | | 1 | 80885 | -2.97 | -82 | 0.0 | 0% |
| Pipe | 4 | 0.1 | 0.01 | 10 | 3.0 | | 67 | 50 | | 68 | 293.15 | 80885 | -82.3 | -6.0 | | 770 | 4 | 4.03 | 46 | 3.8 | 20841 | 0.026 | 0 | | 6 | 80879 | -2.97 | -82 | 0.0 | 0% |
| Standard Elbow 90° | 4 | 0.1 | 0.01 | 1 | 0.3 | 0.51 | 67 | 50 | | 68 | 293.15 | 80879 | -82.3 | -6.0 | | 770 | 4 | 4.03 | 46 | 3.8 | 20841 | 0.026 | 4 | | 1 | 80875 | -2.97 | -82 | 0.0 | 0% |
| Pipe (in plant - ISVE2) | 4 | 0.1 | 0.01 | 20 | 6.1 | | 67 | 50 | | 68 | 293.15 | 80875 | -82.3 | -6.0 | | 770 | 4 | 4.03 | 46 | 3.8 | 20841 | 0.026 | 0 | | 12 | 80863 | -2.97 | -82 | 0.0 | 0% |
| Through Tee | 4 | 0.1 | 0.01 | 1 | 0.3 | 0.34 | 67 | 50 | | 68 | 293.15 | 80863 | -82.3 | -6.0 | | 770 | 4 | 4.03 | 46 | 3.8 | 20841 | 0.026 | 2 | | 1 | 80860 | -2.97 | -82 | 0.0 | 0% |
| Flow Meter | 4 | 0.1 | 0.01 | 1 | 0.3 | 0.8 | 67 | 50 | | 68 | 293.15 | 80860 | -82.4 | -6.0 | | 770 | 4 | 4.03 | 46 | 3.8 | 20841 | 0.026 | 6 | | 1 | 80854 | -2.97 | -82 | 0.0 | 0% |
| Ball Valve | 4 | 0.1 | 0.01 | 1 | 0.3 | 0.05 | 67 | 50 | | 68 | 293.15 | 80854 | -82.4 | -6.0 | | 770 | 4 | 4.03 | 46 | 3.8 | 20841 | 0.026 | 0 | | 1 | 80853 | -2.97 | -82 | 0.0 | 0% |
| Combining Tee | 4 | 0.1 | 0.01 | 5 | 1.5 | | 67 | 50 | | 68 | 293.15 | 80853 | -82.4 | -6.0 | | 770 | 4 | 4.03 | 46 | 3.8 | 20841 | 0.026 | 0 | 100 | 3 | 80750 | -2.99 | -83 | 0.4 | 0% |

**Omega OU1 (On Site Soils)**
**Full Scale OSS Design**
**Pressure Drop Calculations Summary**

Performed by JTB Date 10/9/2012
Checked by NLS Date 10/12/2012

**Purpose**: size pipe for Well ID: VE-28S

Assumption:
Isothermal, change in pressure is less than 10%
No density effects from heating of vapor by fans
No effects from moisture in air (heavier air, more friction etc)
Given only one SVE performance data set exists for each area, all future wells are assumed to perform in the same manner.

Pipe Size Selected **4** inches
Pressure Enterring Manifold **-6.1** in Hg

| Column | (C) | (D) | (E) | (F) | (G) | (H) | (I) | | (J) | (K) | (L) | (M) | (N) | (O) | (P) | (Q) | (R) | (S) | (T) | (U) | (V) | (W) | (X) | (Y) | (Z) | (AA) | (AB) | (AC) | (AD) | (AE) |
|---|---|---|---|---|---|---|---|---|---|---|---|---|---|---|---|---|---|---|---|---|---|---|---|---|---|---|---|---|---|---|
| Item | Pipe ID | | Area A | Length L | | Fitting Loss Coeff K | Flow | | dT (Fan) | Inlet Temperature | | Upstream Pressure | | | Added Static Pressure | Velocity | | Mass Flow | Mass Flow / Area G | | Re | f | Fitting Loss | Equipment Static Loss | Length Losses | Downstream Pressure $P_{out}$ | | Drop | Pressure Change |
| | (in) | (m) | (m2) | (ft) | (m) | | (acfm) | (scfm) | (deg F) | (deg F) | (K) | (Pa) | (in WG) | (in Hg, gauge) | (in WG) | (fpm) | (m/s) | (lbm / min) | (lbm / ft2 min) | (kg / m2 sec) | | | (Pa) | (Pa) | (Pa) | (Pa) | (psi) | (in WG) | (in WG) | |
| ***From Well to Manifold*** | | | | | | | | | | | | | | | | | | | | | | | | | | | | | | |
| Branch Tee | 4 | 0.1 | 0.01 | 1 | 0.3 | 1.02 | 34 | 25 | | 68 | 293.15 | 80998 | -81.8 | -6.0 | | 385 | 2 | 2.01 | 23 | 1.9 | 10420 | 0.031 | 2 | | 0 | 80996 | -2.95 | -82 | 0.0 | 0% |
| Pipe | 4 | 0.1 | 0.01 | 10 | 3.0 | | 34 | 25 | | 68 | 293.15 | 80998 | -81.8 | -6.0 | | 385 | 2 | 2.01 | 23 | 1.9 | 10420 | 0.031 | 0 | | 2 | 80996 | -2.95 | -82 | 0.0 | 0% |
| Standard Elbow 90° | 4 | 0.1 | 0.01 | 1 | 0.3 | 0.51 | 34 | 25 | | 68 | 293.15 | 80996 | -81.8 | -6.0 | | 385 | 2 | 2.01 | 23 | 1.9 | 10420 | 0.031 | 1 | | 0 | 80995 | -2.95 | -82 | 0.0 | 0% |
| Pipe | 4 | 0.1 | 0.01 | 53 | 16.2 | | 34 | 25 | | 68 | 293.15 | 80995 | -81.8 | -6.0 | | 385 | 2 | 2.01 | 23 | 1.9 | 10420 | 0.031 | 0 | | 9 | 80986 | -2.95 | -82 | 0.0 | 0% |
| Standard Elbow 90° | 4 | 0.1 | 0.01 | 1 | 0.3 | 0.51 | 34 | 25 | | 68 | 293.15 | 80986 | -81.8 | -6.0 | | 385 | 2 | 2.01 | 23 | 1.9 | 10420 | 0.031 | 1 | | 0 | 80985 | -2.95 | -82 | 0.0 | 0% |
| Pipe | 4 | 0.1 | 0.01 | 100 | 30.5 | | 34 | 25 | | 68 | 293.15 | 80985 | -81.9 | -6.0 | | 385 | 2 | 2.01 | 23 | 1.9 | 10420 | 0.031 | 0 | | 17 | 80968 | -2.96 | -82 | 0.1 | 0% |
| Standard Elbow 90° | 4 | 0.1 | 0.01 | 1 | 0.3 | 0.51 | 34 | 25 | | 68 | 293.15 | 80968 | -81.9 | -6.0 | | 385 | 2 | 2.01 | 23 | 1.9 | 10420 | 0.031 | 1 | | 0 | 80966 | -2.96 | -82 | 0.0 | 0% |
| Pipe | 4 | 0.1 | 0.01 | 245 | 74.7 | | 34 | 25 | | 68 | 293.15 | 80966 | -81.9 | -6.0 | | 385 | 2 | 2.01 | 23 | 1.9 | 10420 | 0.031 | 0 | | 42 | 80924 | -2.96 | -82 | 0.2 | 0% |
| Standard Elbow 90° | 4 | 0.1 | 0.01 | 1 | 0.3 | 0.51 | 34 | 25 | | 68 | 293.15 | 80924 | -82.1 | -6.0 | | 385 | 2 | 2.01 | 23 | 1.9 | 10420 | 0.031 | 1 | | 0 | 80923 | -2.96 | -82 | 0.0 | 0% |
| Pipe | 4 | 0.1 | 0.01 | 10 | 3.0 | | 34 | 25 | | 68 | 293.15 | 80923 | -82.1 | -6.0 | | 385 | 2 | 2.01 | 23 | 1.9 | 10420 | 0.031 | 0 | | 2 | 80922 | -2.96 | -82 | 0.0 | 0% |
| Standard Elbow 90° | 4 | 0.1 | 0.01 | 1 | 0.3 | 0.51 | 34 | 25 | | 68 | 293.15 | 80922 | -82.1 | -6.0 | | 385 | 2 | 2.01 | 23 | 1.9 | 10420 | 0.031 | 1 | | 0 | 80921 | -2.96 | -82 | 0.0 | 0% |
| Pipe (in plant - ISVE2) | 4 | 0.1 | 0.01 | 20 | 6.1 | | 34 | 25 | | 68 | 293.15 | 80921 | -82.1 | -6.0 | | 385 | 2 | 2.01 | 23 | 1.9 | 10420 | 0.031 | 0 | | 3 | 80917 | -2.96 | -82 | 0.0 | 0% |
| Through Tee | 4 | 0.1 | 0.01 | 1 | 0.3 | 0.34 | 34 | 25 | | 68 | 293.15 | 80917 | -82.1 | -6.0 | | 385 | 2 | 2.01 | 23 | 1.9 | 10420 | 0.031 | 1 | | 0 | 80916 | -2.96 | -82 | 0.0 | 0% |
| Flow Meter | 4 | 0.1 | 0.01 | 1 | 0.3 | 0.8 | 34 | 25 | | 68 | 293.15 | 80916 | -82.1 | -6.0 | | 385 | 2 | 2.01 | 23 | 1.9 | 10420 | 0.031 | 1 | | 0 | 80915 | -2.96 | -82 | 0.0 | 0% |
| Ball Valve | 4 | 0.1 | 0.01 | 1 | 0.3 | 0.05 | 34 | 25 | | 68 | 293.15 | 80915 | -82.1 | -6.0 | | 385 | 2 | 2.01 | 23 | 1.9 | 10420 | 0.031 | 0 | | 0 | 80914 | -2.96 | -82 | 0.0 | 0% |
| Combining Tee | 4 | 0.1 | 0.01 | 5 | 1.5 | | 34 | 25 | | 68 | 293.15 | 80914 | -82.1 | -6.0 | | 385 | 2 | 2.01 | 23 | 1.9 | 10420 | 0.031 | 0 | 100 | 1 | 80814 | -2.98 | -83 | 0.4 | 0% |

**Omega OU1 (On Site Soils)**
**Full Scale OSS Design**
**Pressure Drop Calculations Summary**

Performed by JTB Date 10/9/2012
Checked by NLS Date 10/12/2012

**Purpose**: size pipe for Well ID: VE-29S

Assumption:
Isothermal, change in pressure is less than 10%
No density effects from heating of vapor by fans
No effects from moisture in air (heavier air, more friction etc)
Given only one SVE performance data set exists for each area, all future wells are assumed to perform in the same manner.

Pipe Size Selected **4** inches
Pressure Enterring Manifold **-6.1** in Hg

| Column | (C) | (D) | (E) | (F) | (G) | (H) | (I) | | (J) | (K) | (L) | (M) | (N) | (O) | (P) | (Q) | (R) | (S) | (T) | (U) | (V) | (W) | (X) | (Y) | (Z) | (AA) | (AB) | (AC) | (AD) | (AE) |
|---|---|---|---|---|---|---|---|---|---|---|---|---|---|---|---|---|---|---|---|---|---|---|---|---|---|---|---|---|---|---|
| Item | Pipe ID | | Area A | Length L | | Fitting Loss Coeff K | Flow | | dT (Fan) | Inlet Temperature | | Upstream Pressure | | | Added Static Pressure | Velocity | | Mass Flow | Mass Flow / Area G | | Re | f | Fitting Loss | Equipment Static Loss | Length Losses | Downstream Pressure $P_{out}$ | | Drop | Pressure Change |
| | (in) | (m) | (m2) | (ft) | (m) | | (acfm) | (scfm) | (deg F) | (deg F) | (K) | (Pa) | (in WG) | (in Hg, gauge) | (in WG) | (fpm) | (m/s) | (lbm / min) | (lbm / ft2 min) | (kg / m2 sec) | | | (Pa) | (Pa) | (Pa) | (Pa) | (psi) | (in WG) | (in WG) | |
| ***From Well to Manifold*** | | | | | | | | | | | | | | | | | | | | | | | | | | | | | | |
| Branch Tee | 4 | 0.1 | 0.01 | 1 | 0.3 | 1.02 | 47 | 35 | | 68 | 293.15 | 80998 | -81.8 | -6.0 | | 539 | 3 | 2.82 | 32 | 2.6 | 14588 | 0.029 | 4 | | 0 | 80994 | -2.95 | -82 | 0.0 | 0% |
| Pipe | 4 | 0.1 | 0.01 | 5 | 1.5 | | 47 | 35 | | 68 | 293.15 | 80998 | -81.8 | -6.0 | | 539 | 3 | 2.82 | 32 | 2.6 | 14588 | 0.029 | 0 | | 2 | 80996 | -2.95 | -82 | 0.0 | 0% |
| Standard Elbow 90° | 4 | 0.1 | 0.01 | 1 | 0.3 | 0.51 | 47 | 35 | | 68 | 293.15 | 80996 | -81.8 | -6.0 | | 539 | 3 | 2.82 | 32 | 2.6 | 14588 | 0.029 | 2 | | 0 | 80994 | -2.95 | -82 | 0.0 | 0% |
| Pipe | 4 | 0.1 | 0.01 | 31 | 9.4 | | 47 | 35 | | 68 | 293.15 | 80994 | -81.8 | -6.0 | | 539 | 3 | 2.82 | 32 | 2.6 | 14588 | 0.029 | 0 | | 10 | 80985 | -2.95 | -82 | 0.0 | 0% |
| Standard Elbow 90° | 4 | 0.1 | 0.01 | 1 | 0.3 | 0.51 | 47 | 35 | | 68 | 293.15 | 80985 | -81.9 | -6.0 | | 539 | 3 | 2.82 | 32 | 2.6 | 14588 | 0.029 | 2 | | 0 | 80982 | -2.95 | -82 | 0.0 | 0% |
| Pipe | 4 | 0.1 | 0.01 | 210 | 64.0 | | 47 | 35 | | 68 | 293.15 | 80982 | -81.9 | -6.0 | | 539 | 3 | 2.82 | 32 | 2.6 | 14588 | 0.029 | 0 | | 65 | 80917 | -2.96 | -82 | 0.3 | 0% |
| Standard Elbow 90° | 4 | 0.1 | 0.01 | 1 | 0.3 | 0.51 | 47 | 35 | | 68 | 293.15 | 80917 | -82.1 | -6.0 | | 539 | 3 | 2.82 | 32 | 2.6 | 14588 | 0.029 | 2 | | 0 | 80915 | -2.96 | -82 | 0.0 | 0% |
| Pipe | 4 | 0.1 | 0.01 | 245 | 74.7 | | 47 | 35 | | 68 | 293.15 | 80915 | -82.1 | -6.0 | | 539 | 3 | 2.82 | 32 | 2.6 | 14588 | 0.029 | 0 | | 76 | 80840 | -2.98 | -82 | 0.3 | 0% |
| Standard Elbow 90° | 4 | 0.1 | 0.01 | 1 | 0.3 | 0.51 | 47 | 35 | | 68 | 293.15 | 80840 | -82.4 | -6.0 | | 539 | 3 | 2.82 | 32 | 2.6 | 14588 | 0.029 | 2 | | 0 | 80837 | -2.98 | -82 | 0.0 | 0% |
| Pipe | 4 | 0.1 | 0.01 | 10 | 3.0 | | 47 | 35 | | 68 | 293.15 | 80837 | -82.4 | -6.0 | | 539 | 3 | 2.82 | 32 | 2.6 | 14588 | 0.029 | 0 | | 3 | 80834 | -2.98 | -82 | 0.0 | 0% |
| Standard Elbow 90° | 4 | 0.1 | 0.01 | 1 | 0.3 | 0.51 | 47 | 35 | | 68 | 293.15 | 80834 | -82.5 | -6.1 | | 539 | 3 | 2.82 | 32 | 2.6 | 14588 | 0.029 | 2 | | 0 | 80832 | -2.98 | -82 | 0.0 | 0% |
| Pipe (in plant - ISVE2) | 4 | 0.1 | 0.01 | 20 | 6.1 | | 47 | 35 | | 68 | 293.15 | 80832 | -82.5 | -6.1 | | 539 | 3 | 2.82 | 32 | 2.6 | 14588 | 0.029 | 0 | | 6 | 80826 | -2.98 | -82 | 0.0 | 0% |
| Through Tee | 4 | 0.1 | 0.01 | 1 | 0.3 | 0.34 | 47 | 35 | | 68 | 293.15 | 80826 | -82.5 | -6.1 | | 539 | 3 | 2.82 | 32 | 2.6 | 14588 | 0.029 | 1 | | 0 | 80824 | -2.98 | -82 | 0.0 | 0% |
| Flow Meter | 4 | 0.1 | 0.01 | 1 | 0.3 | 0.8 | 47 | 35 | | 68 | 293.15 | 80824 | -82.5 | -6.1 | | 539 | 3 | 2.82 | 32 | 2.6 | 14588 | 0.029 | 3 | | 0 | 80821 | -2.98 | -83 | 0.0 | 0% |
| Ball Valve | 4 | 0.1 | 0.01 | 1 | 0.3 | 0.05 | 47 | 35 | | 68 | 293.15 | 80821 | -82.5 | -6.1 | | 539 | 3 | 2.82 | 32 | 2.6 | 14588 | 0.029 | 0 | | 0 | 80821 | -2.98 | -83 | 0.0 | 0% |
| Combining Tee | 4 | 0.1 | 0.01 | 5 | 1.5 | | 47 | 35 | | 68 | 293.15 | 80821 | -82.5 | -6.1 | | 539 | 3 | 2.82 | 32 | 2.6 | 14588 | 0.029 | 0 | 100 | 2 | 80719 | -2.99 | -83 | 0.4 | 0% |

**Omega OU1 (On Site Soils)**
**Full Scale OSS Design**
**Pressure Drop Calculations Summary**

Performed by JTB Date 10/9/2012
Checked by NLS Date 10/12/2012

**Purpose**: size pipe for Well ID: VE-30S

Assumption:
Isothermal, change in pressure is less than 10%
No density effects from heating of vapor by fans
No effects from moisture in air (heavier air, more friction etc)
Given only one SVE performance data set exists for each area, all future wells are assumed to perform in the same manner.

Pipe Size Selected **4** inches
Pressure Enterring Manifold **-6.4** in Hg

| Column | (C) | (D) | (E) | (F) | (G) | (H) | (I) | | (J) | (K) | (L) | (M) | (N) | (O) | (P) | (Q) | (R) | (S) | (T) | (U) | (V) | (W) | (X) | (Y) | (Z) | (AA) | (AB) | (AC) | (AD) | (AE) |
|---|---|---|---|---|---|---|---|---|---|---|---|---|---|---|---|---|---|---|---|---|---|---|---|---|---|---|---|---|---|---|
| Item | Pipe ID | | Area A | Length L | | Fitting Loss Coeff K | Flow | | dT (Fan) | Inlet Temperature | | Upstream Pressure | | | Added Static Pressure | Velocity | | Mass Flow | Mass Flow / Area G | | Re | f | Fitting Loss | Equipment Static Loss | Length Losses | Downstream Pressure $P_{out}$ | | Drop | Pressure Change |
| | (in) | (m) | (m2) | (ft) | (m) | | (acfm) | (scfm) | (deg F) | (deg F) | (K) | (Pa) | (in WG) | (in Hg, gauge) | (in WG) | (fpm) | (m/s) | (lbm / min) | (lbm / ft2 min) | (kg / m2 sec) | | | (Pa) | (Pa) | (Pa) | (Pa) | (psi) | (in WG) | (in WG) | |
| ***From Well to Manifold*** | | | | | | | | | | | | | | | | | | | | | | | | | | | | | | |
| Branch Tee | 4 | 0.1 | 0.01 | 1 | 0.3 | 1.02 | 202 | 150 | | 68 | 293.15 | 80998 | -81.8 | -6.0 | | 2309 | 12 | 12.08 | 138 | 11.3 | 62522 | 0.021 | 67 | | 4 | 80926 | -2.96 | -82 | 0.3 | 0% |
| Pipe | 4 | 0.1 | 0.01 | 5 | 1.5 | | 202 | 150 | | 68 | 293.15 | 80998 | -81.8 | -6.0 | | 2309 | 12 | 12.08 | 138 | 11.3 | 62522 | 0.021 | 0 | | 21 | 80977 | -2.96 | -82 | 0.1 | 0% |
| Standard Elbow 90° | 4 | 0.1 | 0.01 | 1 | 0.3 | 0.51 | 202 | 150 | | 68 | 293.15 | 80977 | -81.9 | -6.0 | | 2309 | 12 | 12.08 | 138 | 11.3 | 62522 | 0.021 | 34 | | 4 | 80939 | -2.96 | -82 | 0.2 | 0% |
| Pipe | 4 | 0.1 | 0.01 | 35 | 10.7 | | 202 | 150 | | 68 | 293.15 | 80939 | -82.0 | -6.0 | | 2309 | 12 | 12.08 | 138 | 11.3 | 62522 | 0.021 | 0 | | 146 | 80793 | -2.98 | -83 | 0.6 | 0% |
| Standard Elbow 45° | 4 | 0.1 | 0.01 | 1 | 0.3 | 0.27 | 202 | 150 | | 68 | 293.15 | 80793 | -82.6 | -6.1 | | 2309 | 12 | 12.08 | 138 | 11.3 | 62522 | 0.021 | 18 | | 4 | 80771 | -2.99 | -83 | 0.1 | 0% |
| Pipe | 4 | 0.1 | 0.01 | 55 | 16.8 | | 202 | 150 | | 68 | 293.15 | 80771 | -82.7 | -6.1 | | 2309 | 12 | 12.08 | 138 | 11.3 | 62522 | 0.021 | 0 | | 230 | 80540 | -3.02 | -84 | 0.9 | 0% |
| Standard Elbow 45° | 4 | 0.1 | 0.01 | 1 | 0.3 | 0.27 | 202 | 149 | | 68 | 293.15 | 80540 | -83.6 | -6.1 | | 2309 | 12 | 12.08 | 138 | 11.3 | 62522 | 0.021 | 18 | | 4 | 80518 | -3.02 | -84 | 0.1 | 0% |
| Pipe | 4 | 0.1 | 0.01 | 23 | 7.0 | | 202 | 149 | | 68 | 293.15 | 80518 | -83.7 | -6.1 | | 2309 | 12 | 12.08 | 138 | 11.3 | 62522 | 0.021 | 0 | | 97 | 80422 | -3.04 | -84 | 0.4 | 0% |
| Standard Elbow 90° | 4 | 0.1 | 0.01 | 1 | 0.3 | 0.51 | 202 | 149 | | 68 | 293.15 | 80422 | -84.1 | -6.2 | | 2309 | 12 | 12.08 | 138 | 11.3 | 62522 | 0.021 | 34 | | 4 | 80384 | -3.04 | -84 | 0.2 | 0% |
| Pipe | 4 | 0.1 | 0.01 | 115 | 35.1 | | 202 | 149 | | 68 | 293.15 | 80384 | -84.3 | -6.2 | | 2309 | 12 | 12.08 | 138 | 11.3 | 62522 | 0.021 | 0 | | 485 | 79899 | -3.11 | -86 | 1.9 | 1% |
| Standard Elbow 90° | 4 | 0.1 | 0.01 | 1 | 0.3 | 0.51 | 202 | 148 | | 68 | 293.15 | 79899 | -86.2 | -6.3 | | 2309 | 12 | 12.08 | 138 | 11.3 | 62522 | 0.021 | 34 | | 4 | 79861 | -3.12 | -86 | 0.2 | 0% |
| Pipe (in plant - ISVE2) | 4 | 0.1 | 0.01 | 20 | 6.1 | | 202 | 148 | | 68 | 293.15 | 79861 | -86.4 | -6.3 | | 2309 | 12 | 12.08 | 138 | 11.3 | 62522 | 0.021 | 0 | | 85 | 79776 | -3.13 | -87 | 0.3 | 0% |
| Through Tee | 4 | 0.1 | 0.01 | 1 | 0.3 | 0.34 | 202 | 148 | | 68 | 293.15 | 79776 | -86.7 | -6.4 | | 2309 | 12 | 12.08 | 138 | 11.3 | 62522 | 0.021 | 22 | | 4 | 79750 | -3.13 | -87 | 0.1 | 0% |
| Flow Meter | 4 | 0.1 | 0.01 | 1 | 0.3 | 0.8 | 202 | 148 | | 68 | 293.15 | 79750 | -86.8 | -6.4 | | 2309 | 12 | 12.08 | 138 | 11.3 | 62522 | 0.021 | 53 | | 4 | 79692 | -3.14 | -87 | 0.2 | 0% |
| Ball Valve | 4 | 0.1 | 0.01 | 1 | 0.3 | 0.05 | 202 | 148 | | 68 | 293.15 | 79692 | -87.0 | -6.4 | | 2309 | 12 | 12.08 | 138 | 11.3 | 62522 | 0.021 | 3 | | 4 | 79685 | -3.14 | -87 | 0.0 | 0% |
| Combining Tee | 4 | 0.1 | 0.01 | 5 | 1.5 | | 202 | 148 | | 68 | 293.15 | 79685 | -87.1 | -6.4 | | 2309 | 12 | 12.08 | 138 | 11.3 | 62522 | 0.021 | 0 | 100 | 21 | 79564 | -3.16 | -88 | 0.5 | 0% |

**Omega OU1 (On Site Soils)**
**Full Scale OSS Design**
**Pressure Drop Calculations Summary**

Performed by NLS Date 6/20/2013
Checked by JTB Date 7/11/2013

**Purpose**: size pipe for Well ID: VE-31S

Assumption:
Isothermal, change in pressure is less than 10%
No density effects from heating of vapor by fans
No effects from moisture in air (heavier air, more friction etc)
Given only one SVE performance data set exists for each area, all future wells are assumed to perform in the same manner
All quantities and wells listed include spare capacity for additional wells

Pipe Size Selected **3** inches
Pressure Enterring Manifold **-7.9** in Hg

| Column | (C) | (D) | (E) | (F) | (G) | (H) | (I) | | (J) | (K) | (L) | (M) | (N) | (O) | (P) | (Q) | (R) | (S) | (T) | (U) | (V) | (W) | (X) | (Y) | (Z) | (AA) | (AB) | (AC) | (AD) | (AE) |
|---|---|---|---|---|---|---|---|---|---|---|---|---|---|---|---|---|---|---|---|---|---|---|---|---|---|---|---|---|---|---|
| Item | Pipe ID | | Area A | Length L | | Fitting Loss Coeff K | Flow | | dT (Fan) | Inlet Temperature | | Upstream Pressure | | | Added Static Pressure | Velocity | | Mass Flow | Mass Flow / Area G | | Re | f | Fitting Loss | Equipment Static Loss | Length Losses | Downstream Pressure Drop $P_{out}$ | | | | Pressure Change |
| | (in) | (m) | (m2) | (ft) | (m) | | (acfm) | (scfm) | (deg F) | (deg F) | (K) | (Pa) | (in WG) | (in Hg, gauge) | (in WG) | (fpm) | (m/s) | (lbm / min) | (lbm / ft2 min) | (kg / m2 sec) | | | (Pa) | (Pa) | (Pa) | (Pa) | (psi) | (in WG) | (in WG) | |
| ***From Well to Manifold*** | | | | | | | | | | | | | | | | | | | | | | | | | | | | | | |
| Branch Tee | **4** | 0.1 | 0.01 | **1** | 0.3 | 1.02 | 148 | 110 | | 68 | 293.15 | 80998 | -82 | -6 | | 1694 | 9 | 8.86 | 102 | 8.3 | 45849 | 0.022 | 36 | | 2 | 80959 | -2.96 | -82 | 0.2 | 0% |
| Abrupt Reduction | **3** | 0.1 | 0.00 | **1** | 0.3 | 0.219 | 148 | 110 | | 68 | 293.15 | 80959 | -82 | -6 | | 3011 | 15 | 8.86 | 180 | 14.7 | 61132 | 0.022 | 25 | | 10 | 80925 | -2.96 | -82 | 0.1 | 0% |
| Pipe | **3** | 0.1 | 0.00 | **360** | 109.7 | | 148 | 110 | | 68 | 293.15 | 80925 | -82 | -6 | | 3011 | 15 | 8.86 | 180 | 14.7 | 61132 | 0.022 | 0 | | 3561 | 77364 | -3.48 | -96 | 14.3 | 4% |
| Standard Elbow 45° | **3** | 0.1 | 0.00 | **1** | 0.3 | 0.29 | 148 | 105 | | 68 | 293.15 | 77364 | -96 | -7 | | 3011 | 15 | 8.86 | 180 | 14.7 | 61132 | 0.022 | 33 | | 10 | 77321 | -3.49 | -97 | 0.2 | 0% |
| Pipe | **3** | 0.1 | 0.00 | **60** | 18.3 | | 148 | 105 | | 68 | 293.15 | 77321 | -97 | -7 | | 3011 | 15 | 8.86 | 180 | 14.7 | 61132 | 0.022 | 0 | | 610 | 76711 | -3.57 | -99 | 2.5 | 1% |
| Standard Elbow 45° | **3** | 0.1 | 0.00 | **1** | 0.3 | 0.29 | 148 | 104 | | 68 | 293.15 | 76711 | -99 | -7 | | 3011 | 15 | 8.86 | 180 | 14.7 | 61132 | 0.022 | 33 | | 10 | 76668 | -3.58 | -99 | 0.2 | 0% |
| Pipe | **3** | 0.1 | 0.00 | **95** | 29.0 | | 148 | 104 | | 68 | 293.15 | 76668 | -99 | -7 | | 3011 | 15 | 8.86 | 180 | 14.7 | 61132 | 0.022 | 0 | | 976 | 75692 | -3.72 | -103 | 3.9 | 1% |
| Standard Elbow 90° | **3** | 0.1 | 0.00 | **1** | 0.3 | 0.54 | 148 | 103 | | 68 | 293.15 | 75692 | -103 | -8 | | 3011 | 15 | 8.86 | 180 | 14.7 | 61132 | 0.022 | 61 | | 10 | 75621 | -3.73 | -103 | 0.3 | 0% |
| Pipe | **3** | 0.1 | 0.00 | **30** | 9.1 | | 148 | 103 | | 68 | 293.15 | 75621 | -103 | -8 | | 3011 | 15 | 8.86 | 180 | 14.7 | 61132 | 0.022 | 0 | | 311 | 75309 | -3.78 | -105 | 1.3 | 0% |
| Standard Elbow 90° | **3** | 0.1 | 0.00 | **1** | 0.3 | 0.54 | 148 | 102 | | 68 | 293.15 | 75309 | -105 | -8 | | 3011 | 15 | 8.86 | 180 | 14.7 | 61132 | 0.022 | 61 | | 10 | 75238 | -3.79 | -105 | 0.3 | 0% |
| Pipe | **3** | 0.1 | 0.00 | **15** | 4.6 | | 148 | 102 | | 68 | 293.15 | 75238 | -105 | -8 | | 3011 | 15 | 8.86 | 180 | 14.7 | 61132 | 0.022 | 0 | | 156 | 75082 | -3.81 | -106 | 0.6 | 0% |
| Standard Elbow 90° | **3** | 0.1 | 0.00 | **1** | 0.3 | 0.54 | 148 | 102 | | 68 | 293.15 | 75082 | -106 | -8 | | 3011 | 15 | 8.86 | 180 | 14.7 | 61132 | 0.022 | 61 | | 10 | 75011 | -3.82 | -106 | 0.3 | 0% |
| Pipe (in plant) | **3** | 0.1 | 0.00 | **20** | 6.1 | | 148 | 102 | | 68 | 293.15 | 75011 | -106 | -8 | | 3011 | 15 | 8.86 | 180 | 14.7 | 61132 | 0.022 | 0 | | 209 | 74802 | -3.85 | -107 | 0.8 | 0% |
| Through Tee | **3** | 0.1 | 0.00 | **1** | 0.3 | 0.36 | 148 | 102 | | 68 | 293.15 | 74802 | -107 | -8 | | 3011 | 15 | 8.86 | 180 | 14.7 | 61132 | 0.022 | 40 | | 10 | 74751 | -3.86 | -107 | 0.2 | 0% |
| Flow Meter | **3** | 0.1 | 0.00 | **1** | 0.3 | **0.8** | 148 | 102 | | 68 | 293.15 | 74751 | -107 | -8 | | 3011 | 15 | 8.86 | 180 | 14.7 | 61132 | 0.022 | 90 | | 10 | 74651 | -3.87 | -107 | 0.4 | 0% |
| Ball Valve | **3** | 0.1 | 0.00 | **1** | 0.3 | 0.05 | 148 | 101 | | 68 | 293.15 | 74651 | -107 | -8 | | 3011 | 15 | 8.86 | 180 | 14.7 | 61132 | 0.022 | 6 | | 10 | 74635 | -3.88 | -107 | 0.1 | 0% |
| Combining Tee | **3** | 0.1 | 0.00 | **5** | 1.5 | | 148 | 101 | | 68 | 293.15 | 74635 | -107 | -8 | | 3011 | 15 | 8.86 | 180 | 14.7 | 61132 | 0.022 | 0 | 100 | 52 | 74482 | -3.90 | -108 | 0.6 | 0% |

**Omega OU1 (On Site Soils)**
**Full Scale OSS Design**
**Pressure Drop Calculations Summary**

Performed by NLS Date 6/20/2013
Checked by JTB Date 7/11/2013

**Purpose**: size pipe for Well ID: VE-32S

Assumption:
Isothermal, change in pressure is less than 10%
No density effects from heating of vapor by fans
No effects from moisture in air (heavier air, more friction etc)
Given only one SVE performance data set exists for each area, all future wells are assumed to perform in the same manner
All quantities and wells listed include spare capacity for additional wells

Pipe Size Selected **3** inches
Pressure Enterring Manifold **-8.2** in Hg

| Column | (C) | (D) | (E) | (F) | (G) | (H) | (I) | | (J) | (K) | (L) | (M) | (N) | (O) | (P) | (Q) | (R) | (S) | (T) | (U) | (V) | (W) | (X) | (Y) | (Z) | (AA) | (AB) | (AC) | (AD) | (AE) |
|---|---|---|---|---|---|---|---|---|---|---|---|---|---|---|---|---|---|---|---|---|---|---|---|---|---|---|---|---|---|---|
| Item | Pipe ID | | Area A | Length L | | Fitting Loss Coeff K | Flow | | dT (Fan) | Inlet Temperature | | Upstream Pressure | | | Added Static Pressure | Velocity | | Mass Flow | Mass Flow / Area G | | Re | f | Fitting Loss | Equipment Static Loss | Length Losses | Downstream Pressure $P_{out}$ | | | Drop | Pressure Change |
| | (in) | (m) | (m2) | (ft) | (m) | | (acfm) | (scfm) | (deg F) | (deg F) | (K) | (Pa) | (in WG) | (in Hg, gauge) | (in WG) | (fpm) | (m/s) | (lbm / min) | (lbm / ft2 min) | (kg / m2 sec) | | | (Pa) | (Pa) | (Pa) | (Pa) | (psi) | (in WG) | (in WG) | |
| ***From Well to Manifold*** | | | | | | | | | | | | | | | | | | | | | | | | | | | | | | |
| Branch Tee | **4** | 0.1 | 0.01 | **1** | 0.3 | 1.02 | 148 | 110 | | 68 | 293.15 | 80998 | -82 | -6 | | 1694 | 9 | 8.86 | 102 | 8.3 | 45849 | 0.022 | 36 | | 2 | 80959 | -2.96 | -82 | 0.2 | 0% |
| Abrupt Reduction | **3** | 0.1 | 0.00 | **1** | 0.3 | 0.219 | 148 | 110 | | 68 | 293.15 | 80959 | -82 | -6 | | 3011 | 15 | 8.86 | 180 | 14.7 | 61132 | 0.022 | 25 | | 10 | 80925 | -2.96 | -82 | 0.1 | 0% |
| Pipe | **3** | 0.1 | 0.00 | **105** | 32.0 | | 148 | 110 | | 68 | 293.15 | 80925 | -82 | -6 | | 3011 | 15 | 8.86 | 180 | 14.7 | 61132 | 0.022 | 0 | | 1022 | 79903 | -3.11 | -86 | 4.1 | 1% |
| Standard Elbow 90° | **3** | 0.1 | 0.00 | **1** | 0.3 | 0.54 | 148 | 109 | | 68 | 293.15 | 79903 | -86 | -6 | | 3011 | 15 | 8.86 | 180 | 14.7 | 61132 | 0.022 | 61 | | 10 | 79832 | -3.12 | -86 | 0.3 | 0% |
| Pipe | **3** | 0.1 | 0.00 | **330** | 100.6 | | 148 | 108 | | 68 | 293.15 | 79832 | -86 | -6 | | 3011 | 15 | 8.86 | 180 | 14.7 | 61132 | 0.022 | 0 | | 3305 | 76527 | -3.60 | -100 | 13.3 | 4% |
| Standard Elbow 45° | **3** | 0.1 | 0.00 | **1** | 0.3 | 0.29 | 148 | 104 | | 68 | 293.15 | 76527 | -100 | -7 | | 3011 | 15 | 8.86 | 180 | 14.7 | 61132 | 0.022 | 33 | | 10 | 76484 | -3.61 | -100 | 0.2 | 0% |
| Pipe | **3** | 0.1 | 0.00 | **60** | 18.3 | | 148 | 104 | | 68 | 293.15 | 76484 | -100 | -7 | | 3011 | 15 | 8.86 | 180 | 14.7 | 61132 | 0.022 | 0 | | 617 | 75868 | -3.70 | -102 | 2.5 | 1% |
| Standard Elbow 45° | **3** | 0.1 | 0.00 | **1** | 0.3 | 0.29 | 148 | 103 | | 68 | 293.15 | 75868 | -102 | -8 | | 3011 | 15 | 8.86 | 180 | 14.7 | 61132 | 0.022 | 33 | | 10 | 75825 | -3.70 | -103 | 0.2 | 0% |
| Pipe | **3** | 0.1 | 0.00 | **95** | 29.0 | | 148 | 103 | | 68 | 293.15 | 75825 | -103 | -8 | | 3011 | 15 | 8.86 | 180 | 14.7 | 61132 | 0.022 | 0 | | 987 | 74837 | -3.85 | -107 | 4.0 | 1% |
| Standard Elbow 90° | **3** | 0.1 | 0.00 | **1** | 0.3 | 0.54 | 148 | 102 | | 68 | 293.15 | 74837 | -107 | -8 | | 3011 | 15 | 8.86 | 180 | 14.7 | 61132 | 0.022 | 61 | | 10 | 74766 | -3.86 | -107 | 0.3 | 0% |
| Pipe | **3** | 0.1 | 0.00 | **30** | 9.1 | | 148 | 102 | | 68 | 293.15 | 74766 | -107 | -8 | | 3011 | 15 | 8.86 | 180 | 14.7 | 61132 | 0.022 | 0 | | 315 | 74452 | -3.90 | -108 | 1.3 | 0% |
| Standard Elbow 90° | **3** | 0.1 | 0.00 | **1** | 0.3 | 0.54 | 148 | 101 | | 68 | 293.15 | 74452 | -108 | -8 | | 3011 | 15 | 8.86 | 180 | 14.7 | 61132 | 0.022 | 61 | | 11 | 74380 | -3.91 | -108 | 0.3 | 0% |
| Pipe | **3** | 0.1 | 0.00 | **15** | 4.6 | | 148 | 101 | | 68 | 293.15 | 74380 | -108 | -8 | | 3011 | 15 | 8.86 | 180 | 14.7 | 61132 | 0.022 | 0 | | 158 | 74222 | -3.93 | -109 | 0.6 | 0% |
| Standard Elbow 90° | **3** | 0.1 | 0.00 | **1** | 0.3 | 0.54 | 148 | 101 | | 68 | 293.15 | 74222 | -109 | -8 | | 3011 | 15 | 8.86 | 180 | 14.7 | 61132 | 0.022 | 61 | | 11 | 74151 | -3.95 | -109 | 0.3 | 0% |
| Pipe (in plant) | **3** | 0.1 | 0.00 | **20** | 6.1 | | 148 | 101 | | 68 | 293.15 | 74151 | -109 | -8 | | 3011 | 15 | 8.86 | 180 | 14.7 | 61132 | 0.022 | 0 | | 211 | 73940 | -3.98 | -110 | 0.9 | 0% |
| Through Tee | **3** | 0.1 | 0.00 | **1** | 0.3 | 0.36 | 148 | 100 | | 68 | 293.15 | 73940 | -110 | -8 | | 3011 | 15 | 8.86 | 180 | 14.7 | 61132 | 0.022 | 40 | | 11 | 73889 | -3.98 | -110 | 0.2 | 0% |
| Flow Meter | **3** | 0.1 | 0.00 | **1** | 0.3 | **0.8** | 148 | 100 | | 68 | 293.15 | 73889 | -110 | -8 | | 3011 | 15 | 8.86 | 180 | 14.7 | 61132 | 0.022 | 90 | | 11 | 73788 | -4.00 | -111 | 0.4 | 0% |
| Ball Valve | **3** | 0.1 | 0.00 | **1** | 0.3 | 0.05 | 148 | 100 | | 68 | 293.15 | 73788 | -111 | -8 | | 3011 | 15 | 8.86 | 180 | 14.7 | 61132 | 0.022 | 6 | | 11 | 73772 | -4.00 | -111 | 0.1 | 0% |
| Combining Tee | **3** | 0.1 | 0.00 | **5** | 1.5 | | 148 | 100 | | 68 | 293.15 | 73772 | -111 | -8 | | 3011 | 15 | 8.86 | 180 | 14.7 | 61132 | 0.022 | 0 | 100 | 53 | 73619 | -4.02 | -111 | 0.6 | 0% |

**Omega OU1 (On Site Soils)**
**Full Scale OSS Design**
**Pressure Drop Calculations Summary**

Performed by NLS Date 5/13/2013
Checked by JTB Date 5/14/2013

**Purpose**: size pipe for Well ID: VE-33S

Assumption:
Isothermal, change in pressure is less than 10%
No density effects from heating of vapor by fans
No effects from moisture in air (heavier air, more friction etc)
Given only one SVE performance data set exists for each area, all future wells are assumed to perform in the same manner.

Pipe Size Selected **3** inches
Pressure Enterring Manifold **-7.7** in Hg

| Column | (C) | (D) | (E) | (F) | (G) | (H) | (I) | | (J) | (K) | (L) | (M) | (N) | (O) | (P) | (Q) | (R) | (S) | (T) | (U) | (V) | (W) | (X) | (Y) | (Z) | (AA) | (AB) | (AC) | (AD) | (AE) |
|---|---|---|---|---|---|---|---|---|---|---|---|---|---|---|---|---|---|---|---|---|---|---|---|---|---|---|---|---|---|---|
| Item | Pipe ID | | Area A | Length L | | Fitting Loss Coeff K | Flow | | dT (Fan) | Inlet Temperature | | Upstream Pressure | | | Added Static Pressure | Velocity | | Mass Flow | Mass Flow / Area G | | Re | f | Fitting Loss | Equipment Static Loss | Length Losses | Downstream Pressure $P_{out}$ | | Drop | | Pressure Change |
| | (in) | (m) | (m2) | (ft) | (m) | | (acfm) | (scfm) | (deg F) | (deg F) | (K) | (Pa) | (in WG) | (in Hg, gauge) | (in WG) | (fpm) | (m/s) | (lbm / min) | (lbm / ft2 min) | (kg / m2 sec) | | | (Pa) | (Pa) | (Pa) | (Pa) | (psi) | (in WG) | (in WG) | |
| ***From Well to Manifold*** | | | | | | | | | | | | | | | | | | | | | | | | | | | | | | |
| Branch Tee | **4** | 0.1 | 0.01 | **1** | 0.3 | 1.02 | 148 | 110 | | 68 | 293.15 | 80998 | -81.8 | -6.0 | | 1694 | 9 | 8.86 | 102 | 8.3 | 45849 | 0.022 | 36 | | 2 | 80959 | -2.96 | -82 | 0.2 | 0% |
| Abrupt Reduction | **3** | 0.1 | 0.00 | **1** | 0.3 | 0.219 | 148 | 110 | | 68 | 293.15 | 80959 | -82.0 | -6.0 | | 3011 | 15 | 8.86 | 180 | 14.7 | 61132 | 0.022 | 25 | | 10 | 80925 | -2.96 | -82 | 0.1 | 0% |
| Pipe | **3** | 0.1 | 0.00 | **195** | 59.4 | | 148 | 110 | | 68 | 293.15 | 80925 | -82.1 | -6.0 | | 3011 | 15 | 8.86 | 180 | 14.7 | 61132 | 0.022 | 0 | | 1909 | 79016 | -3.24 | -90 | 7.7 | 2% |
| Standard Elbow 90° | **3** | 0.1 | 0.00 | **1** | 0.3 | 0.54 | 148 | 107 | | 68 | 293.15 | 79016 | -89.8 | -6.6 | | 3011 | 15 | 8.86 | 180 | 14.7 | 61132 | 0.022 | 61 | | 10 | 78945 | -3.25 | -90 | 0.3 | 0% |
| Pipe | **3** | 0.1 | 0.00 | **100** | 30.5 | | 148 | 107 | | 68 | 293.15 | 78945 | -90.1 | -6.6 | | 3011 | 15 | 8.86 | 180 | 14.7 | 61132 | 0.022 | 0 | | 998 | 77947 | -3.39 | -94 | 4.0 | 1% |
| Standard Elbow 45° | **3** | 0.1 | 0.00 | **1** | 0.3 | 0.29 | 148 | 106 | | 68 | 293.15 | 77947 | -94.1 | -6.9 | | 3011 | 15 | 8.86 | 180 | 14.7 | 61132 | 0.022 | 33 | | 10 | 77905 | -3.40 | -94 | 0.2 | 0% |
| Pipe | **3** | 0.1 | 0.00 | **60** | 18.3 | | 148 | 106 | | 68 | 293.15 | 77905 | -94.2 | -6.9 | | 3011 | 15 | 8.86 | 180 | 14.7 | 61132 | 0.022 | 0 | | 605 | 77299 | -3.49 | -97 | 2.4 | 1% |
| Standard Elbow 45° | **3** | 0.1 | 0.00 | **1** | 0.3 | 0.29 | 148 | 105 | | 68 | 293.15 | 77299 | -96.7 | -7.1 | | 3011 | 15 | 8.86 | 180 | 14.7 | 61132 | 0.022 | 33 | | 10 | 77256 | -3.49 | -97 | 0.2 | 0% |
| Pipe | **3** | 0.1 | 0.00 | **95** | 29.0 | | 148 | 105 | | 68 | 293.15 | 77256 | -96.8 | -7.1 | | 3011 | 15 | 8.86 | 180 | 14.7 | 61132 | 0.022 | 0 | | 969 | 76288 | -3.64 | -101 | 3.9 | 1% |
| Standard Elbow 90° | **3** | 0.1 | 0.00 | **1** | 0.3 | 0.54 | 148 | 104 | | 68 | 293.15 | 76288 | -100.7 | -7.4 | | 3011 | 15 | 8.86 | 180 | 14.7 | 61132 | 0.022 | 61 | | 10 | 76217 | -3.65 | -101 | 0.3 | 0% |
| Pipe | **3** | 0.1 | 0.00 | **30** | 9.1 | | 148 | 104 | | 68 | 293.15 | 76217 | -101.0 | -7.4 | | 3011 | 15 | 8.86 | 180 | 14.7 | 61132 | 0.022 | 0 | | 309 | 75908 | -3.69 | -102 | 1.2 | 0% |
| Standard Elbow 90° | **3** | 0.1 | 0.00 | **1** | 0.3 | 0.54 | 148 | 103 | | 68 | 293.15 | 75908 | -102.3 | -7.5 | | 3011 | 15 | 8.86 | 180 | 14.7 | 61132 | 0.022 | 61 | | 10 | 75837 | -3.70 | -103 | 0.3 | 0% |
| Pipe | **3** | 0.1 | 0.00 | **15** | 4.6 | | 148 | 103 | | 68 | 293.15 | 75837 | -102.6 | -7.5 | | 3011 | 15 | 8.86 | 180 | 14.7 | 61132 | 0.022 | 0 | | 155 | 75682 | -3.72 | -103 | 0.6 | 0% |
| Standard Elbow 90° | **3** | 0.1 | 0.00 | **1** | 0.3 | 0.54 | 148 | 103 | | 68 | 293.15 | 75682 | -103.2 | -7.6 | | 3011 | 15 | 8.86 | 180 | 14.7 | 61132 | 0.022 | 61 | | 10 | 75611 | -3.73 | -103 | 0.3 | 0% |
| Pipe (in plant) | **3** | 0.1 | 0.00 | **20** | 6.1 | | 148 | 103 | | 68 | 293.15 | 75611 | -103.5 | -7.6 | | 3011 | 15 | 8.86 | 180 | 14.7 | 61132 | 0.022 | 0 | | 207 | 75404 | -3.76 | -104 | 0.8 | 0% |
| Through Tee | **3** | 0.1 | 0.00 | **1** | 0.3 | 0.36 | 148 | 102 | | 68 | 293.15 | 75404 | -104.3 | -7.7 | | 3011 | 15 | 8.86 | 180 | 14.7 | 61132 | 0.022 | 40 | | 10 | 75353 | -3.77 | -104 | 0.2 | 0% |
| Flow Meter | **3** | 0.1 | 0.00 | **1** | 0.3 | **0.8** | 148 | 102 | | 68 | 293.15 | 75353 | -104.5 | -7.7 | | 3011 | 15 | 8.86 | 180 | 14.7 | 61132 | 0.022 | 90 | | 10 | 75252 | -3.79 | -105 | 0.4 | 0% |
| Ball Valve | **3** | 0.1 | 0.00 | **1** | 0.3 | 0.05 | 148 | 102 | | 68 | 293.15 | 75252 | -104.9 | -7.7 | | 3011 | 15 | 8.86 | 180 | 14.7 | 61132 | 0.022 | 6 | | 10 | 75236 | -3.79 | -105 | 0.1 | 0% |
| Combining Tee | **3** | 0.1 | 0.00 | **5** | 1.5 | | 148 | 102 | | 68 | 293.15 | 75236 | -105.0 | -7.7 | | 3011 | 15 | 8.86 | 180 | 14.7 | 61132 | 0.022 | 0 | 100 | 52 | 75084 | -3.81 | -106 | 0.6 | 0% |

**Omega OU1 (On Site Soils)**
**Full Scale OSS Design**
**Pressure Drop Calculations Summary**

Performed by NLS Date 5/13/2013
Checked by JTB Date 5/14/2013

**Purpose**: size pipe for Well ID: VE-34S

Assumption:
Isothermal, change in pressure is less than 10%
No density effects from heating of vapor by fans
No effects from moisture in air (heavier air, more friction etc)
Given only one SVE performance data set exists for each area, all future wells are assumed to perform in the same manner.

Pipe Size Selected **3** inches
Pressure Enterring Manifold **-7.5** in Hg

| Column | (C) | (D) | (E) | (F) | (G) | (H) | (I) | | (J) | (K) | (L) | (M) | (N) | (O) | (P) | (Q) | (R) | (S) | (T) | (U) | (V) | (W) | (X) | (Y) | (Z) | (AA) | (AB) | (AC) | (AD) | (AE) |
|---|---|---|---|---|---|---|---|---|---|---|---|---|---|---|---|---|---|---|---|---|---|---|---|---|---|---|---|---|---|---|
| Item | Pipe ID | | Area A | Length L | | Fitting Loss Coeff K | Flow | | dT (Fan) | Inlet Temperature | | Upstream Pressure | | | Added Static Pressure | Velocity | | Mass Flow | Mass Flow / Area G | | Re | f | Fitting Loss | Equipment Static Loss | Length Losses | Downstream Pressure | $P_{out}$ | Drop | Pressure Change |
| | (in) | (m) | (m2) | (ft) | (m) | | (acfm) | (scfm) | (deg F) | (deg F) | (K) | (Pa) | (in WG) | (in Hg, gauge) | (in WG) | (fpm) | (m/s) | (lbm / min) | (lbm / ft2 min) | (kg / m2 sec) | | | (Pa) | (Pa) | (Pa) | (Pa) | (psi) | (in WG) | (in WG) | |
| ***From Well to Manifold*** | | | | | | | | | | | | | | | | | | | | | | | | | | | | | | |
| Branch Tee | **4** | 0.1 | 0.01 | **1** | 0.3 | 1.02 | 148 | 110 | | 68 | 293.15 | 80998 | -81.8 | -6.0 | | 1694 | 9 | 8.86 | 102 | 8.3 | 45849 | 0.022 | 36 | | 2 | 80959 | -2.96 | -82 | 0.2 | 0% |
| Abrupt Reduction | **3** | 0.1 | 0.00 | **1** | 0.3 | 0.219 | 148 | 110 | | 68 | 293.15 | 80959 | -82.0 | -6.0 | | 3011 | 15 | 8.86 | 180 | 14.7 | 61132 | 0.022 | 25 | | 10 | 80925 | -2.96 | -82 | 0.1 | 0% |
| Pipe | **3** | 0.1 | 0.00 | **215** | 65.5 | | 148 | 110 | | 68 | 293.15 | 80925 | -82.1 | -6.0 | | 3011 | 15 | 8.86 | 180 | 14.7 | 61132 | 0.022 | 0 | | 2108 | 78817 | -3.27 | -91 | 8.5 | 3% |
| Standard Elbow 45° | **3** | 0.1 | 0.00 | **1** | 0.3 | 0.29 | 148 | 107 | | 68 | 293.15 | 78817 | -90.6 | -6.6 | | 3011 | 15 | 8.86 | 180 | 14.7 | 61132 | 0.022 | 33 | | 10 | 78775 | -3.27 | -91 | 0.2 | 0% |
| Pipe | **3** | 0.1 | 0.00 | **60** | 18.3 | | 148 | 107 | | 68 | 293.15 | 78775 | -90.7 | -6.7 | | 3011 | 15 | 8.86 | 180 | 14.7 | 61132 | 0.022 | 0 | | 599 | 78176 | -3.36 | -93 | 2.4 | 1% |
| Standard Elbow 45° | **3** | 0.1 | 0.00 | **1** | 0.3 | 0.29 | 148 | 106 | | 68 | 293.15 | 78176 | -93.1 | -6.8 | | 3011 | 15 | 8.86 | 180 | 14.7 | 61132 | 0.022 | 33 | | 10 | 78134 | -3.37 | -93 | 0.2 | 0% |
| Pipe | **3** | 0.1 | 0.00 | **95** | 29.0 | | 148 | 106 | | 68 | 293.15 | 78134 | -93.3 | -6.8 | | 3011 | 15 | 8.86 | 180 | 14.7 | 61132 | 0.022 | 0 | | 958 | 77176 | -3.51 | -97 | 3.9 | 1% |
| Standard Elbow 90° | **3** | 0.1 | 0.00 | **1** | 0.3 | 0.54 | 148 | 105 | | 68 | 293.15 | 77176 | -97.2 | -7.1 | | 3011 | 15 | 8.86 | 180 | 14.7 | 61132 | 0.022 | 61 | | 10 | 77105 | -3.52 | -97 | 0.3 | 0% |
| Pipe | **3** | 0.1 | 0.00 | **30** | 9.1 | | 148 | 105 | | 68 | 293.15 | 77105 | -97.5 | -7.2 | | 3011 | 15 | 8.86 | 180 | 14.7 | 61132 | 0.022 | 0 | | 305 | 76800 | -3.56 | -99 | 1.2 | 0% |
| Standard Elbow 90° | **3** | 0.1 | 0.00 | **1** | 0.3 | 0.54 | 148 | 104 | | 68 | 293.15 | 76800 | -98.7 | -7.2 | | 3011 | 15 | 8.86 | 180 | 14.7 | 61132 | 0.022 | 61 | | 10 | 76729 | -3.57 | -99 | 0.3 | 0% |
| Pipe | **3** | 0.1 | 0.00 | **15** | 4.6 | | 148 | 104 | | 68 | 293.15 | 76729 | -99.0 | -7.3 | | 3011 | 15 | 8.86 | 180 | 14.7 | 61132 | 0.022 | 0 | | 153 | 76576 | -3.59 | -100 | 0.6 | 0% |
| Standard Elbow 90° | **3** | 0.1 | 0.00 | **1** | 0.3 | 0.54 | 148 | 104 | | 68 | 293.15 | 76576 | -99.6 | -7.3 | | 3011 | 15 | 8.86 | 180 | 14.7 | 61132 | 0.022 | 61 | | 10 | 76505 | -3.60 | -100 | 0.3 | 0% |
| Pipe (in plant) | **3** | 0.1 | 0.00 | **20** | 6.1 | | 148 | 104 | | 68 | 293.15 | 76505 | -99.9 | -7.3 | | 3011 | 15 | 8.86 | 180 | 14.7 | 61132 | 0.022 | 0 | | 205 | 76300 | -3.63 | -101 | 0.8 | 0% |
| Through Tee | **3** | 0.1 | 0.00 | **1** | 0.3 | 0.36 | 148 | 104 | | 68 | 293.15 | 76300 | -100.7 | -7.4 | | 3011 | 15 | 8.86 | 180 | 14.7 | 61132 | 0.022 | 40 | | 10 | 76249 | -3.64 | -101 | 0.2 | 0% |
| Flow Meter | **3** | 0.1 | 0.00 | **1** | 0.3 | **0.8** | 148 | 104 | | 68 | 293.15 | 76249 | -100.9 | -7.4 | | 3011 | 15 | 8.86 | 180 | 14.7 | 61132 | 0.022 | 90 | | 10 | 76149 | -3.66 | -101 | 0.4 | 0% |
| Ball Valve | **3** | 0.1 | 0.00 | **1** | 0.3 | 0.05 | 148 | 103 | | 68 | 293.15 | 76149 | -101.3 | -7.4 | | 3011 | 15 | 8.86 | 180 | 14.7 | 61132 | 0.022 | 6 | | 10 | 76133 | -3.66 | -101 | 0.1 | 0% |
| Combining Tee | **3** | 0.1 | 0.00 | **5** | 1.5 | | 148 | 103 | | 68 | 293.15 | 76133 | -101.4 | -7.4 | | 3011 | 15 | 8.86 | 180 | 14.7 | 61132 | 0.022 | 0 | 100 | 51 | 75982 | -3.68 | -102 | 0.6 | 0% |

**Omega OU1 (On Site Soils)**
**Full Scale OSS Design**
**Pressure Drop Calculations Summary**

Performed by NLS Date 5/13/2013
Checked by JTB Date 5/14/2013

**Purpose**: size pipe for Well ID: VE-35S

Assumption:
Isothermal, change in pressure is less than 10%
No density effects from heating of vapor by fans
No effects from moisture in air (heavier air, more friction etc)
Given only one SVE performance data set exists for each area, all future wells are assumed to perform in the same manner.

Pipe Size Selected **3** inches
Pressure Enterring Manifold **-7.2** in Hg

| Column | (C) | (D) | (E) | (F) | (G) | (H) | (I) | | (J) | (K) | (L) | (M) | (N) | (O) | (P) | (Q) | (R) | (S) | (T) | (U) | (V) | (W) | (X) | (Y) | (Z) | (AA) | (AB) | (AC) | (AD) | (AE) |
|---|---|---|---|---|---|---|---|---|---|---|---|---|---|---|---|---|---|---|---|---|---|---|---|---|---|---|---|---|---|---|
| Item | Pipe ID | | Area A | Length L | | Fitting Loss Coeff K | Flow | | dT (Fan) | Inlet Temperature | | Upstream Pressure | | | Added Static Pressure | Velocity | | Mass Flow | Mass Flow / Area G | | Re | f | Fitting Loss | Equipment Static Loss | Length Losses | Downstream Pressure $P_{out}$ | | Drop | Pressure Change |
| | (in) | (m) | (m2) | (ft) | (m) | | (acfm) | (scfm) | (deg F) | (deg F) | (K) | (Pa) | (in WG) | (in Hg, gauge) | (in WG) | (fpm) | (m/s) | (lbm / min) | (lbm / ft2 min) | (kg / m2 sec) | | | (Pa) | (Pa) | (Pa) | (Pa) | (psi) | (in WG) | (in WG) | |
| ***From Well to Manifold*** | | | | | | | | | | | | | | | | | | | | | | | | | | | | | | |
| Branch Tee | **4** | 0.1 | 0.01 | **1** | 0.3 | 1.02 | 148 | 110 | | 68 | 293.15 | 80998 | -81.8 | -6.0 | | 1694 | 9 | 8.86 | 102 | 8.3 | 45849 | 0.022 | 36 | | 2 | 80959 | -2.96 | -82 | 0.2 | 0% |
| Abrupt Reduction | **3** | 0.1 | 0.00 | **1** | 0.3 | 0.219 | 148 | 110 | | 68 | 293.15 | 80959 | -82.0 | -6.0 | | 3011 | 15 | 8.86 | 180 | 14.7 | 61132 | 0.022 | 25 | | 10 | 80925 | -2.96 | -82 | 0.1 | 0% |
| Pipe | **3** | 0.1 | 0.00 | **110** | 33.5 | | 148 | 110 | | 68 | 293.15 | 80925 | -82.1 | -6.0 | | 3011 | 15 | 8.86 | 180 | 14.7 | 61132 | 0.022 | 0 | | 1071 | 79854 | -3.12 | -86 | 4.3 | 1% |
| Standard Elbow 45° | **3** | 0.1 | 0.00 | **1** | 0.3 | 0.29 | 148 | 108 | | 68 | 293.15 | 79854 | -86.4 | -6.3 | | 3011 | 15 | 8.86 | 180 | 14.7 | 61132 | 0.022 | 33 | | 10 | 79811 | -3.12 | -87 | 0.2 | 0% |
| Pipe | **3** | 0.1 | 0.00 | **60** | 18.3 | | 148 | 108 | | 68 | 293.15 | 79811 | -86.6 | -6.4 | | 3011 | 15 | 8.86 | 180 | 14.7 | 61132 | 0.022 | 0 | | 591 | 79220 | -3.21 | -89 | 2.4 | 1% |
| Standard Elbow 45° | **3** | 0.1 | 0.00 | **1** | 0.3 | 0.29 | 148 | 108 | | 68 | 293.15 | 79220 | -88.9 | -6.5 | | 3011 | 15 | 8.86 | 180 | 14.7 | 61132 | 0.022 | 33 | | 10 | 79178 | -3.22 | -89 | 0.2 | 0% |
| Pipe | **3** | 0.1 | 0.00 | **95** | 29.0 | | 148 | 108 | | 68 | 293.15 | 79178 | -89.1 | -6.5 | | 3011 | 15 | 8.86 | 180 | 14.7 | 61132 | 0.022 | 0 | | 945 | 78233 | -3.35 | -93 | 3.8 | 1% |
| Standard Elbow 90° | **3** | 0.1 | 0.00 | **1** | 0.3 | 0.54 | 148 | 106 | | 68 | 293.15 | 78233 | -92.9 | -6.8 | | 3011 | 15 | 8.86 | 180 | 14.7 | 61132 | 0.022 | 61 | | 10 | 78162 | -3.36 | -93 | 0.3 | 0% |
| Pipe | **3** | 0.1 | 0.00 | **30** | 9.1 | | 148 | 106 | | 68 | 293.15 | 78162 | -93.2 | -6.8 | | 3011 | 15 | 8.86 | 180 | 14.7 | 61132 | 0.022 | 0 | | 301 | 77861 | -3.41 | -94 | 1.2 | 0% |
| Standard Elbow 90° | **3** | 0.1 | 0.00 | **1** | 0.3 | 0.54 | 148 | 106 | | 68 | 293.15 | 77861 | -94.4 | -6.9 | | 3011 | 15 | 8.86 | 180 | 14.7 | 61132 | 0.022 | 61 | | 10 | 77790 | -3.42 | -95 | 0.3 | 0% |
| Pipe | **3** | 0.1 | 0.00 | **15** | 4.6 | | 148 | 106 | | 68 | 293.15 | 77790 | -94.7 | -6.9 | | 3011 | 15 | 8.86 | 180 | 14.7 | 61132 | 0.022 | 0 | | 151 | 77639 | -3.44 | -95 | 0.6 | 0% |
| Standard Elbow 90° | **3** | 0.1 | 0.00 | **1** | 0.3 | 0.54 | 148 | 105 | | 68 | 293.15 | 77639 | -95.3 | -7.0 | | 3011 | 15 | 8.86 | 180 | 14.7 | 61132 | 0.022 | 61 | | 10 | 77569 | -3.45 | -96 | 0.3 | 0% |
| Pipe (in plant) | **3** | 0.1 | 0.00 | **20** | 6.1 | | 148 | 105 | | 68 | 293.15 | 77569 | -95.6 | -7.0 | | 3011 | 15 | 8.86 | 180 | 14.7 | 61132 | 0.022 | 0 | | 202 | 77366 | -3.48 | -96 | 0.8 | 0% |
| Through Tee | **3** | 0.1 | 0.00 | **1** | 0.3 | 0.36 | 148 | 105 | | 68 | 293.15 | 77366 | -96.4 | -7.1 | | 3011 | 15 | 8.86 | 180 | 14.7 | 61132 | 0.022 | 40 | | 10 | 77316 | -3.49 | -97 | 0.2 | 0% |
| Flow Meter | **3** | 0.1 | 0.00 | **1** | 0.3 | **0.8** | 148 | 105 | | 68 | 293.15 | 77316 | -96.6 | -7.1 | | 3011 | 15 | 8.86 | 180 | 14.7 | 61132 | 0.022 | 90 | | 10 | 77216 | -3.50 | -97 | 0.4 | 0% |
| Ball Valve | **3** | 0.1 | 0.00 | **1** | 0.3 | 0.05 | 148 | 105 | | 68 | 293.15 | 77216 | -97.0 | -7.1 | | 3011 | 15 | 8.86 | 180 | 14.7 | 61132 | 0.022 | 6 | | 10 | 77200 | -3.50 | -97 | 0.1 | 0% |
| Combining Tee | **3** | 0.1 | 0.00 | **5** | 1.5 | | 148 | 105 | | 68 | 293.15 | 77200 | -97.1 | -7.1 | | 3011 | 15 | 8.86 | 180 | 14.7 | 61132 | 0.022 | 0 | 100 | 51 | 77049 | -3.52 | -98 | 0.6 | 0% |

**Omega OU1 (On Site Soils)**
**Full Scale OSS Design**
**Pressure Drop Calculations Summary**

Performed by NLS Date 5/13/2013
Checked by JTB Date 5/14/2013

**Purpose**: size pipe for Well ID: VE-36S

Assumption:
Isothermal, change in pressure is less than 10%
No density effects from heating of vapor by fans
No effects from moisture in air (heavier air, more friction etc)
Given only one SVE performance data set exists for each area, all future wells are assumed to perform in the same manner.

Pipe Size Selected **3** inches
Pressure Enterring Manifold **-7.4** in Hg

| Column | (C) | (D) | (E) | (F) | (G) | (H) | (I) | | (J) | (K) | (L) | (M) | (N) | (O) | (P) | (Q) | (R) | (S) | (T) | (U) | (V) | (W) | (X) | (Y) | (Z) | (AA) | (AB) | (AC) | (AD) | (AE) |
|---|---|---|---|---|---|---|---|---|---|---|---|---|---|---|---|---|---|---|---|---|---|---|---|---|---|---|---|---|---|---|
| Item | Pipe ID | | Area A | Length L | | Fitting Loss Coeff K | Flow | | dT (Fan) | Inlet Temperature | | Upstream Pressure | | | Added Static Pressure | Velocity | | Mass Flow | Mass Flow / Area G | | Re | f | Fitting Loss | Equipment Static Loss | Length Losses | Downstream Pressure $P_{out}$ | | Drop | Pressure Change |
| | (in) | (m) | (m2) | (ft) | (m) | | (acfm) | (scfm) | (deg F) | (deg F) | (K) | (Pa) | (in WG) | (in Hg, gauge) | (in WG) | (fpm) | (m/s) | (lbm / min) | (lbm / ft2 min) | (kg / m2 sec) | | | (Pa) | (Pa) | (Pa) | (Pa) | (psi) | (in WG) | (in WG) | |
| ***From Well to Manifold*** | | | | | | | | | | | | | | | | | | | | | | | | | | | | | | |
| Branch Tee | 4 | 0.1 | 0.01 | 1 | 0.3 | 1.02 | 148 | 110 | | 68 | 293.15 | 80998 | -81.8 | -6.0 | | 1694 | 9 | 8.86 | 102 | 8.3 | 45849 | 0.022 | 36 | | 2 | 80959 | -2.96 | -82 | 0.2 | 0% |
| Abrupt Reduction | 3 | 0.1 | 0.00 | 1 | 0.3 | 0.219 | 148 | 110 | | 68 | 293.15 | 80959 | -82.0 | -6.0 | | 3011 | 15 | 8.86 | 180 | 14.7 | 61132 | 0.022 | 25 | | 10 | 80925 | -2.96 | -82 | 0.1 | 0% |
| Pipe | 3 | 0.1 | 0.00 | 80 | 24.4 | | 148 | 110 | | 68 | 293.15 | 80925 | -82.1 | -6.0 | | 3011 | 15 | 8.86 | 180 | 14.7 | 61132 | 0.022 | 0 | | 778 | 80147 | -3.08 | -85 | 3.1 | 1% |
| Standard Elbow 90° | 3 | 0.1 | 0.00 | 1 | 0.3 | 0.54 | 148 | 109 | | 68 | 293.15 | 80147 | -85.2 | -6.3 | | 3011 | 15 | 8.86 | 180 | 14.7 | 61132 | 0.022 | 61 | | 10 | 80077 | -3.09 | -86 | 0.3 | 0% |
| Pipe | 3 | 0.1 | 0.00 | 100 | 30.5 | | 148 | 109 | | 68 | 293.15 | 80077 | -85.5 | -6.3 | | 3011 | 15 | 8.86 | 180 | 14.7 | 61132 | 0.022 | 0 | | 984 | 79093 | -3.23 | -89 | 4.0 | 1% |
| Standard Elbow 45° | 3 | 0.1 | 0.00 | 1 | 0.3 | 0.29 | 148 | 107 | | 68 | 293.15 | 79093 | -89.5 | -6.6 | | 3011 | 15 | 8.86 | 180 | 14.7 | 61132 | 0.022 | 33 | | 10 | 79051 | -3.23 | -90 | 0.2 | 0% |
| Pipe | 3 | 0.1 | 0.00 | 60 | 18.3 | | 148 | 107 | | 68 | 293.15 | 79051 | -89.6 | -6.6 | | 3011 | 15 | 8.86 | 180 | 14.7 | 61132 | 0.022 | 0 | | 597 | 78454 | -3.32 | -92 | 2.4 | 1% |
| Standard Elbow 45° | 3 | 0.1 | 0.00 | 1 | 0.3 | 0.29 | 148 | 107 | | 68 | 293.15 | 78454 | -92.0 | -6.8 | | 3011 | 15 | 8.86 | 180 | 14.7 | 61132 | 0.022 | 33 | | 10 | 78411 | -3.33 | -92 | 0.2 | 0% |
| Pipe | 3 | 0.1 | 0.00 | 95 | 29.0 | | 148 | 107 | | 68 | 293.15 | 78411 | -92.2 | -6.8 | | 3011 | 15 | 8.86 | 180 | 14.7 | 61132 | 0.022 | 0 | | 954 | 77457 | -3.47 | -96 | 3.8 | 1% |
| Standard Elbow 90° | 3 | 0.1 | 0.00 | 1 | 0.3 | 0.54 | 148 | 105 | | 68 | 293.15 | 77457 | -96.0 | -7.0 | | 3011 | 15 | 8.86 | 180 | 14.7 | 61132 | 0.022 | 61 | | 10 | 77386 | -3.48 | -96 | 0.3 | 0% |
| Pipe | 3 | 0.1 | 0.00 | 30 | 9.1 | | 148 | 105 | | 68 | 293.15 | 77386 | -96.3 | -7.1 | | 3011 | 15 | 8.86 | 180 | 14.7 | 61132 | 0.022 | 0 | | 304 | 77082 | -3.52 | -98 | 1.2 | 0% |
| Standard Elbow 90° | 3 | 0.1 | 0.00 | 1 | 0.3 | 0.54 | 148 | 105 | | 68 | 293.15 | 77082 | -97.5 | -7.2 | | 3011 | 15 | 8.86 | 180 | 14.7 | 61132 | 0.022 | 61 | | 10 | 77011 | -3.53 | -98 | 0.3 | 0% |
| Pipe | 3 | 0.1 | 0.00 | 15 | 4.6 | | 148 | 105 | | 68 | 293.15 | 77011 | -97.8 | -7.2 | | 3011 | 15 | 8.86 | 180 | 14.7 | 61132 | 0.022 | 0 | | 153 | 76859 | -3.55 | -98 | 0.6 | 0% |
| Standard Elbow 90° | 3 | 0.1 | 0.00 | 1 | 0.3 | 0.54 | 148 | 104 | | 68 | 293.15 | 76859 | -98.4 | -7.2 | | 3011 | 15 | 8.86 | 180 | 14.7 | 61132 | 0.022 | 61 | | 10 | 76788 | -3.56 | -99 | 0.3 | 0% |
| Pipe (in plant) | 3 | 0.1 | 0.00 | 20 | 6.1 | | 148 | 104 | | 68 | 293.15 | 76788 | -98.7 | -7.2 | | 3011 | 15 | 8.86 | 180 | 14.7 | 61132 | 0.022 | 0 | | 204 | 76584 | -3.59 | -100 | 0.8 | 0% |
| Through Tee | 3 | 0.1 | 0.00 | 1 | 0.3 | 0.36 | 148 | 104 | | 68 | 293.15 | 76584 | -99.5 | -7.3 | | 3011 | 15 | 8.86 | 180 | 14.7 | 61132 | 0.022 | 40 | | 10 | 76533 | -3.60 | -100 | 0.2 | 0% |
| Flow Meter | 3 | 0.1 | 0.00 | 1 | 0.3 | 0.8 | 148 | 104 | | 68 | 293.15 | 76533 | -99.8 | -7.3 | | 3011 | 15 | 8.86 | 180 | 14.7 | 61132 | 0.022 | 90 | | 10 | 76433 | -3.61 | -100 | 0.4 | 0% |
| Ball Valve | 3 | 0.1 | 0.00 | 1 | 0.3 | 0.05 | 148 | 104 | | 68 | 293.15 | 76433 | -100.2 | -7.4 | | 3011 | 15 | 8.86 | 180 | 14.7 | 61132 | 0.022 | 6 | | 10 | 76417 | -3.62 | -100 | 0.1 | 0% |
| Combining Tee | 3 | 0.1 | 0.00 | 5 | 1.5 | | 148 | 104 | | 68 | 293.15 | 76417 | -100.2 | -7.4 | | 3011 | 15 | 8.86 | 180 | 14.7 | 61132 | 0.022 | 0 | 100 | 51 | 76266 | -3.64 | -101 | 0.6 | 0% |

**Omega OU1 (On Site Soils)**
**Full Scale OSS Design**
**Pressure Drop Calculations Summary**

Performed by NLS Date 5/13/2013
Checked by JTB Date 5/14/2013

**Purpose**: size pipe for Well ID: VE-37S

Assumption:
Isothermal, change in pressure is less than 10%
No density effects from heating of vapor by fans
No effects from moisture in air (heavier air, more friction etc)
Given only one SVE performance data set exists for each area, all future wells are assumed to perform in the same manner.

Pipe Size Selected **3** inches
Pressure Enterring Manifold **-7.3** in Hg

| Column | (C) | (D) | (E) | (F) | (G) | (H) | (I) | | (J) | (K) | (L) | (M) | (N) | (O) | (P) | (Q) | (R) | (S) | (T) | (U) | (V) | (W) | (X) | (Y) | (Z) | (AA) | (AB) | (AC) | (AD) | (AE) |
|---|---|---|---|---|---|---|---|---|---|---|---|---|---|---|---|---|---|---|---|---|---|---|---|---|---|---|---|---|---|---|
| Item | Pipe ID | | Area A | Length L | | Fitting Loss Coeff K | Flow | | dT (Fan) | Inlet Temperature | | Upstream Pressure | | | Added Static Pressure | Velocity | | Mass Flow | Mass Flow / Area G | | Re | f | Fitting Loss | Equipment Static Loss | Length Losses | Downstream Pressure $P_{out}$ | | Drop | | Pressure Change |
| | (in) | (m) | (m2) | (ft) | (m) | | (acfm) | (scfm) | (deg F) | (deg F) | (K) | (Pa) | (in WG) | (in Hg, gauge) | (in WG) | (fpm) | (m/s) | (lbm / min) | (lbm / ft2 min) | (kg / m2 sec) | | | (Pa) | (Pa) | (Pa) | (Pa) | (psi) | (in WG) | (in WG) | |
| ***From Well to Manifold*** | | | | | | | | | | | | | | | | | | | | | | | | | | | | | | |
| Branch Tee | 4 | 0.1 | 0.01 | 1 | 0.3 | 1.02 | 148 | 110 | | 68 | 293.15 | 80998 | -81.8 | -6.0 | | 1694 | 9 | 8.86 | 102 | 8.3 | 45849 | 0.022 | 36 | | 2 | 80959 | -2.96 | -82 | 0.2 | 0% |
| Abrupt Reduction | 3 | 0.1 | 0.00 | 1 | 0.3 | 0.219 | 148 | 110 | | 68 | 293.15 | 80959 | -82.0 | -6.0 | | 3011 | 15 | 8.86 | 180 | 14.7 | 61132 | 0.022 | 25 | | 10 | 80925 | -2.96 | -82 | 0.1 | 0% |
| Pipe | 3 | 0.1 | 0.00 | 40 | 12.2 | | 148 | 110 | | 68 | 293.15 | 80925 | -82.1 | -6.0 | | 3011 | 15 | 8.86 | 180 | 14.7 | 61132 | 0.022 | 0 | | 388 | 80537 | -3.02 | -84 | 1.6 | 0% |
| Standard Elbow 90° | 3 | 0.1 | 0.00 | 1 | 0.3 | 0.54 | 148 | 109 | | 68 | 293.15 | 80537 | -83.7 | -6.1 | | 3011 | 15 | 8.86 | 180 | 14.7 | 61132 | 0.022 | 61 | | 10 | 80467 | -3.03 | -84 | 0.3 | 0% |
| Pipe | 3 | 0.1 | 0.00 | 100 | 30.5 | | 148 | 109 | | 68 | 293.15 | 80467 | -83.9 | -6.2 | | 3011 | 15 | 8.86 | 180 | 14.7 | 61132 | 0.022 | 0 | | 979 | 79488 | -3.17 | -88 | 3.9 | 1% |
| Standard Elbow 45° | 3 | 0.1 | 0.00 | 1 | 0.3 | 0.29 | 148 | 108 | | 68 | 293.15 | 79488 | -87.9 | -6.4 | | 3011 | 15 | 8.86 | 180 | 14.7 | 61132 | 0.022 | 33 | | 10 | 79445 | -3.18 | -88 | 0.2 | 0% |
| Pipe | 3 | 0.1 | 0.00 | 60 | 18.3 | | 148 | 108 | | 68 | 293.15 | 79445 | -88.0 | -6.5 | | 3011 | 15 | 8.86 | 180 | 14.7 | 61132 | 0.022 | 0 | | 594 | 78852 | -3.26 | -90 | 2.4 | 1% |
| Standard Elbow 45° | 3 | 0.1 | 0.00 | 1 | 0.3 | 0.29 | 148 | 107 | | 68 | 293.15 | 78852 | -90.4 | -6.6 | | 3011 | 15 | 8.86 | 180 | 14.7 | 61132 | 0.022 | 33 | | 10 | 78809 | -3.27 | -91 | 0.2 | 0% |
| Pipe | 3 | 0.1 | 0.00 | 95 | 29.0 | | 148 | 107 | | 68 | 293.15 | 78809 | -90.6 | -6.6 | | 3011 | 15 | 8.86 | 180 | 14.7 | 61132 | 0.022 | 0 | | 950 | 77860 | -3.41 | -94 | 3.8 | 1% |
| Standard Elbow 90° | 3 | 0.1 | 0.00 | 1 | 0.3 | 0.54 | 148 | 106 | | 68 | 293.15 | 77860 | -94.4 | -6.9 | | 3011 | 15 | 8.86 | 180 | 14.7 | 61132 | 0.022 | 61 | | 10 | 77789 | -3.42 | -95 | 0.3 | 0% |
| Pipe | 3 | 0.1 | 0.00 | 30 | 9.1 | | 148 | 106 | | 68 | 293.15 | 77789 | -94.7 | -7.0 | | 3011 | 15 | 8.86 | 180 | 14.7 | 61132 | 0.022 | 0 | | 303 | 77486 | -3.46 | -96 | 1.2 | 0% |
| Standard Elbow 90° | 3 | 0.1 | 0.00 | 1 | 0.3 | 0.54 | 148 | 105 | | 68 | 293.15 | 77486 | -95.9 | -7.0 | | 3011 | 15 | 8.86 | 180 | 14.7 | 61132 | 0.022 | 61 | | 10 | 77416 | -3.47 | -96 | 0.3 | 0% |
| Pipe | 3 | 0.1 | 0.00 | 15 | 4.6 | | 148 | 105 | | 68 | 293.15 | 77416 | -96.2 | -7.1 | | 3011 | 15 | 8.86 | 180 | 14.7 | 61132 | 0.022 | 0 | | 152 | 77264 | -3.49 | -97 | 0.6 | 0% |
| Standard Elbow 90° | 3 | 0.1 | 0.00 | 1 | 0.3 | 0.54 | 148 | 105 | | 68 | 293.15 | 77264 | -96.8 | -7.1 | | 3011 | 15 | 8.86 | 180 | 14.7 | 61132 | 0.022 | 61 | | 10 | 77193 | -3.50 | -97 | 0.3 | 0% |
| Pipe (in plant) | 3 | 0.1 | 0.00 | 20 | 6.1 | | 148 | 105 | | 68 | 293.15 | 77193 | -97.1 | -7.1 | | 3011 | 15 | 8.86 | 180 | 14.7 | 61132 | 0.022 | 0 | | 203 | 76990 | -3.53 | -98 | 0.8 | 0% |
| Through Tee | 3 | 0.1 | 0.00 | 1 | 0.3 | 0.36 | 148 | 105 | | 68 | 293.15 | 76990 | -97.9 | -7.2 | | 3011 | 15 | 8.86 | 180 | 14.7 | 61132 | 0.022 | 40 | | 10 | 76939 | -3.54 | -98 | 0.2 | 0% |
| Flow Meter | 3 | 0.1 | 0.00 | 1 | 0.3 | 0.8 | 148 | 105 | | 68 | 293.15 | 76939 | -98.1 | -7.2 | | 3011 | 15 | 8.86 | 180 | 14.7 | 61132 | 0.022 | 90 | | 10 | 76839 | -3.56 | -99 | 0.4 | 0% |
| Ball Valve | 3 | 0.1 | 0.00 | 1 | 0.3 | 0.05 | 148 | 104 | | 68 | 293.15 | 76839 | -98.5 | -7.2 | | 3011 | 15 | 8.86 | 180 | 14.7 | 61132 | 0.022 | 6 | | 10 | 76824 | -3.56 | -99 | 0.1 | 0% |
| Combining Tee | 3 | 0.1 | 0.00 | 5 | 1.5 | | 148 | 104 | | 68 | 293.15 | 76824 | -98.6 | -7.2 | | 3011 | 15 | 8.86 | 180 | 14.7 | 61132 | 0.022 | 0 | 100 | 51 | 76673 | -3.58 | -99 | 0.6 | 0% |

**Omega OU1 (On Site Soils)**
**Full Scale OSS Design**
**Pressure Drop Calculations Summary**

Performed by NLS Date 5/13/2013
Checked by JTB Date 5/14/2013

**Purpose**: size pipe for Well ID: VE-38S

Assumption:
Isothermal, change in pressure is less than 10%
No density effects from heating of vapor by fans
No effects from moisture in air (heavier air, more friction etc)
Given only one SVE performance data set exists for each area, all future wells are assumed to perform in the same manner.

Pipe Size Selected **3** inches
Pressure Enterring Manifold **-6.9** in Hg

| Column | (C) | (D) | (E) | (F) | (G) | (H) | (I) | | (J) | (K) | (L) | (M) | (N) | (O) | (P) | (Q) | (R) | (S) | (T) | (U) | (V) | (W) | (X) | (Y) | (Z) | (AA) | (AB) | (AC) | (AD) | (AE) |
|---|---|---|---|---|---|---|---|---|---|---|---|---|---|---|---|---|---|---|---|---|---|---|---|---|---|---|---|---|---|---|
| Item | Pipe ID | | Area A | Length L | | Fitting Loss Coeff K | Flow | | dT (Fan) | Inlet Temperature | | Upstream Pressure | | | Added Static Pressure | Velocity | | Mass Flow | Mass Flow / Area G | | Re | f | Fitting Loss | Equipment Static Loss | Length Losses | Downstream Pressure $P_{out}$ | | Drop | | Pressure Change |
| | (in) | (m) | (m2) | (ft) | (m) | | (acfm) | (scfm) | (deg F) | (deg F) | (K) | (Pa) | (in WG) | (in Hg, gauge) | (in WG) | (fpm) | (m/s) | (lbm / min) | (lbm / ft2 min) | (kg / m2 sec) | | | (Pa) | (Pa) | (Pa) | (Pa) | (psi) | (in WG) | (in WG) | |
| ***From Well to Manifold*** | | | | | | | | | | | | | | | | | | | | | | | | | | | | | | |
| Branch Tee | **4** | 0.1 | 0.01 | **1** | 0.3 | 1.02 | 148 | 110 | | 68 | 293.15 | 80998 | -81.8 | -6.0 | | 1694 | 9 | 8.86 | 102 | 8.3 | 45849 | 0.022 | 36 | | 2 | 80959 | -2.96 | -82 | 0.2 | 0% |
| Abrupt Reduction | **3** | 0.1 | 0.00 | **1** | 0.3 | 0.219 | 148 | 110 | | 68 | 293.15 | 80959 | -82.0 | -6.0 | | 3011 | 15 | 8.86 | 180 | 14.7 | 61132 | 0.022 | 25 | | 10 | 80925 | -2.96 | -82 | 0.1 | 0% |
| Pipe | **3** | 0.1 | 0.00 | **5** | 1.5 | | 148 | 110 | | 68 | 293.15 | 80925 | -82.1 | -6.0 | | 3011 | 15 | 8.86 | 180 | 14.7 | 61132 | 0.022 | 0 | | 48 | 80877 | -2.97 | -82 | 0.2 | 0% |
| Standard Elbow 45° | **3** | 0.1 | 0.00 | **1** | 0.3 | 0.29 | 148 | 110 | | 68 | 293.15 | 80877 | -82.3 | -6.0 | | 3011 | 15 | 8.86 | 180 | 14.7 | 61132 | 0.022 | 33 | | 10 | 80834 | -2.98 | -82 | 0.2 | 0% |
| Pipe | **3** | 0.1 | 0.00 | **60** | 18.3 | | 148 | 110 | | 68 | 293.15 | 80834 | -82.5 | -6.1 | | 3011 | 15 | 8.86 | 180 | 14.7 | 61132 | 0.022 | 0 | | 583 | 80251 | -3.06 | -85 | 2.3 | 1% |
| Standard Elbow 45° | **3** | 0.1 | 0.00 | **1** | 0.3 | 0.29 | 148 | 109 | | 68 | 293.15 | 80251 | -84.8 | -6.2 | | 3011 | 15 | 8.86 | 180 | 14.7 | 61132 | 0.022 | 33 | | 10 | 80209 | -3.07 | -85 | 0.2 | 0% |
| Pipe | **3** | 0.1 | 0.00 | **95** | 29.0 | | 148 | 109 | | 68 | 293.15 | 80209 | -85.0 | -6.2 | | 3011 | 15 | 8.86 | 180 | 14.7 | 61132 | 0.022 | 0 | | 933 | 79276 | -3.20 | -89 | 3.8 | 1% |
| Standard Elbow 90° | **3** | 0.1 | 0.00 | **1** | 0.3 | 0.54 | 148 | 108 | | 68 | 293.15 | 79276 | -88.7 | -6.5 | | 3011 | 15 | 8.86 | 180 | 14.7 | 61132 | 0.022 | 61 | | 10 | 79205 | -3.21 | -89 | 0.3 | 0% |
| Pipe | **3** | 0.1 | 0.00 | **30** | 9.1 | | 148 | 108 | | 68 | 293.15 | 79205 | -89.0 | -6.5 | | 3011 | 15 | 8.86 | 180 | 14.7 | 61132 | 0.022 | 0 | | 297 | 78908 | -3.26 | -90 | 1.2 | 0% |
| Standard Elbow 90° | **3** | 0.1 | 0.00 | **1** | 0.3 | 0.54 | 148 | 107 | | 68 | 293.15 | 78908 | -90.2 | -6.6 | | 3011 | 15 | 8.86 | 180 | 14.7 | 61132 | 0.022 | 61 | | 10 | 78838 | -3.27 | -90 | 0.3 | 0% |
| Pipe | **3** | 0.1 | 0.00 | **15** | 4.6 | | 148 | 107 | | 68 | 293.15 | 78838 | -90.5 | -6.6 | | 3011 | 15 | 8.86 | 180 | 14.7 | 61132 | 0.022 | 0 | | 149 | 78689 | -3.29 | -91 | 0.6 | 0% |
| Standard Elbow 90° | **3** | 0.1 | 0.00 | **1** | 0.3 | 0.54 | 148 | 107 | | 68 | 293.15 | 78689 | -91.1 | -6.7 | | 3011 | 15 | 8.86 | 180 | 14.7 | 61132 | 0.022 | 61 | | 10 | 78618 | -3.30 | -91 | 0.3 | 0% |
| Pipe (in plant) | **3** | 0.1 | 0.00 | **20** | 6.1 | | 148 | 107 | | 68 | 293.15 | 78618 | -91.4 | -6.7 | | 3011 | 15 | 8.86 | 180 | 14.7 | 61132 | 0.022 | 0 | | 199 | 78419 | -3.33 | -92 | 0.8 | 0% |
| Through Tee | **3** | 0.1 | 0.00 | **1** | 0.3 | 0.36 | 148 | 107 | | 68 | 293.15 | 78419 | -92.2 | -6.8 | | 3011 | 15 | 8.86 | 180 | 14.7 | 61132 | 0.022 | 40 | | 10 | 78368 | -3.33 | -92 | 0.2 | 0% |
| Flow Meter | **3** | 0.1 | 0.00 | **1** | 0.3 | **0.8** | 148 | 106 | | 68 | 293.15 | 78368 | -92.4 | -6.8 | | 3011 | 15 | 8.86 | 180 | 14.7 | 61132 | 0.022 | 90 | | 10 | 78268 | -3.35 | -93 | 0.4 | 0% |
| Ball Valve | **3** | 0.1 | 0.00 | **1** | 0.3 | 0.05 | 148 | 106 | | 68 | 293.15 | 78268 | -92.8 | -6.8 | | 3011 | 15 | 8.86 | 180 | 14.7 | 61132 | 0.022 | 6 | | 10 | 78253 | -3.35 | -93 | 0.1 | 0% |
| Combining Tee | **3** | 0.1 | 0.00 | **5** | 1.5 | | 148 | 106 | | 68 | 293.15 | 78253 | -92.8 | -6.8 | | 3011 | 15 | 8.86 | 180 | 14.7 | 61132 | 0.022 | 0 | 100 | 50 | 78103 | -3.37 | -93 | 0.6 | 0% |

**Omega OU1 (On Site Soils)**
**Full Scale OSS Design**
**Pressure Drop Calculations Summary**

Performed by NLS Date 5/8/2013
Checked by JTB Date 5/14/2013

**Purpose**: size pipe for Well ID: VE-39S

Assumption:
Isothermal, change in pressure is less than 10%
No density effects from heating of vapor by fans
No effects from moisture in air (heavier air, more friction etc)
Given only one SVE performance data set exists for each area, all future wells are assumed to perform in the same manner.

Pipe Size Selected **3** inches
Pressure Enterring Manifold **-7.1** in Hg

| Column | (C) | (D) | (E) | (F) | (G) | (H) | (I) | | (J) | (K) | (L) | (M) | (N) | (O) | (P) | (Q) | (R) | (S) | (T) | (U) | (V) | (W) | (X) | (Y) | (Z) | (AA) | (AB) | (AC) | (AD) | (AE) |
|---|---|---|---|---|---|---|---|---|---|---|---|---|---|---|---|---|---|---|---|---|---|---|---|---|---|---|---|---|---|---|
| Item | Pipe ID | | Area A | Length L | | Fitting Loss Coeff K | Flow | | dT (Fan) | Inlet Temperature | | Upstream Pressure | | | Added Static Pressure | Velocity | | Mass Flow | Mass Flow / Area G | | Re | f | Fitting Loss | Equipment Static Loss | Length Losses | Downstream Pressure $P_{out}$ | | Drop | | Pressure Change |
| | (in) | (m) | (m2) | (ft) | (m) | | (acfm) | (scfm) | (deg F) | (deg F) | (K) | (Pa) | (in WG) | (in Hg, gauge) | (in WG) | (fpm) | (m/s) | (lbm / min) | (lbm / ft2 min) | (kg / m2 sec) | | | (Pa) | (Pa) | (Pa) | (Pa) | (psi) | (in WG) | (in WG) | |
| ***From Well to Manifold*** | | | | | | | | | | | | | | | | | | | | | | | | | | | | | | |
| Branch Tee | 3 | 0.1 | 0.00 | 1 | 0.3 | 1.08 | 148 | 110 | | 69 | 293.71 | 80998 | -81.8 | -6.0 | | 3016 | 15 | 8.86 | 180 | 14.7 | 61132 | 0.022 | 122 | | 10 | 80867 | -2.97 | -82 | 0.5 | 0% |
| Pipe | 3 | 0.1 | 0.00 | 5 | 1.5 | | 148 | 110 | | 69 | 293.71 | 80867 | -82.3 | -6.0 | | 3016 | 15 | 8.86 | 180 | 14.7 | 61132 | 0.022 | 0 | | 49 | 80818 | -2.98 | -83 | 0.2 | 0% |
| Standard Elbow 90° | 3 | 0.1 | 0.00 | 1 | 0.3 | 0.54 | 148 | 110 | | 69 | 293.71 | 80818 | -82.5 | -6.1 | | 3016 | 15 | 8.86 | 180 | 14.7 | 61132 | 0.022 | 61 | | 10 | 80748 | -2.99 | -83 | 0.3 | 0% |
| Pipe | 3 | 0.1 | 0.00 | 50 | 15.2 | | 148 | 110 | | 69 | 293.71 | 80748 | -82.8 | -6.1 | | 3016 | 15 | 8.86 | 180 | 14.7 | 61132 | 0.022 | 0 | | 487 | 80260 | -3.06 | -85 | 2.0 | 1% |
| Standard Elbow 90° | 3 | 0.1 | 0.00 | 1 | 0.3 | 0.54 | 148 | 109 | | 69 | 293.71 | 80260 | -84.8 | -6.2 | | 3016 | 15 | 8.86 | 180 | 14.7 | 61132 | 0.022 | 61 | | 10 | 80190 | -3.07 | -85 | 0.3 | 0% |
| Pipe | 3 | 0.1 | 0.00 | 50 | 15.2 | | 148 | 109 | | 69 | 293.71 | 80190 | -85.0 | -6.2 | | 3016 | 15 | 8.86 | 180 | 14.7 | 61132 | 0.022 | 0 | | 491 | 79699 | -3.14 | -87 | 2.0 | 1% |
| Standard Elbow 90° | 3 | 0.1 | 0.00 | 1 | 0.3 | 0.54 | 148 | 108 | | 69 | 293.71 | 79699 | -87.0 | -6.4 | | 3016 | 15 | 8.86 | 180 | 14.7 | 61132 | 0.022 | 61 | | 10 | 79629 | -3.15 | -87 | 0.3 | 0% |
| Pipe | 3 | 0.1 | 0.00 | 170 | 51.8 | | 148 | 108 | | 69 | 293.71 | 79629 | -87.3 | -6.4 | | 3016 | 15 | 8.86 | 180 | 14.7 | 61132 | 0.022 | 0 | | 1693 | 77936 | -3.40 | -94 | 6.8 | 2% |
| Standard Elbow 90° | 3 | 0.1 | 0.00 | 1 | 0.3 | 0.54 | 148 | 106 | | 69 | 293.71 | 77936 | -94.1 | -6.9 | | 3016 | 15 | 8.86 | 180 | 14.7 | 61132 | 0.022 | 61 | | 10 | 77865 | -3.41 | -94 | 0.3 | 0% |
| Pipe | 3 | 0.1 | 0.00 | 15 | 4.6 | | 148 | 106 | | 69 | 293.71 | 77865 | -94.4 | -6.9 | | 3016 | 15 | 8.86 | 180 | 14.7 | 61132 | 0.022 | 0 | | 151 | 77714 | -3.43 | -95 | 0.6 | 0% |
| Standard Elbow 90° | 3 | 0.1 | 0.00 | 1 | 0.3 | 0.54 | 148 | 106 | | 69 | 293.71 | 77714 | -95.0 | -7.0 | | 3016 | 15 | 8.86 | 180 | 14.7 | 61132 | 0.022 | 61 | | 10 | 77643 | -3.44 | -95 | 0.3 | 0% |
| Pipe (in plant) | 3 | 0.1 | 0.00 | 20 | 6.1 | | 148 | 105 | | 69 | 293.71 | 77643 | -95.3 | -7.0 | | 3016 | 15 | 8.86 | 180 | 14.7 | 61132 | 0.022 | 0 | | 202 | 77441 | -3.47 | -96 | 0.8 | 0% |
| Through Tee | 3 | 0.1 | 0.00 | 1 | 0.3 | 0.36 | 148 | 105 | | 69 | 293.71 | 77441 | -96.1 | -7.1 | | 3016 | 15 | 8.86 | 180 | 14.7 | 61132 | 0.022 | 41 | | 10 | 77390 | -3.48 | -96 | 0.2 | 0% |
| Flow Meter | 3 | 0.1 | 0.00 | 1 | 0.3 | 0.8 | 148 | 105 | | 69 | 293.71 | 77390 | -96.3 | -7.1 | | 3016 | 15 | 8.86 | 180 | 14.7 | 61132 | 0.022 | 90 | | 10 | 77290 | -3.49 | -97 | 0.4 | 0% |
| Ball Valve | 3 | 0.1 | 0.00 | 1 | 0.3 | 0.05 | 148 | 105 | | 69 | 293.71 | 77290 | -96.7 | -7.1 | | 3016 | 15 | 8.86 | 180 | 14.7 | 61132 | 0.022 | 6 | | 10 | 77274 | -3.49 | -97 | 0.1 | 0% |
| Combining Tee | 3 | 0.1 | 0.00 | 5 | 1.5 | | 148 | 105 | | 69 | 293.71 | 77274 | -96.8 | -7.1 | | 3016 | 15 | 8.86 | 180 | 14.7 | 61132 | 0.022 | 0 | 100 | 51 | 77123 | -3.51 | -97 | 0.6 | 0% |

**Omega OU1 (On Site Soils)**
**Full Scale OSS Design**
**Pressure Drop Calculations Summary**

Performed by NLS Date 5/8/2013
Checked by JTB Date 5/14/2013

**Purpose**: size pipe for Well ID: VE-40S

Assumption:
Isothermal, change in pressure is less than 10%
No density effects from heating of vapor by fans
No effects from moisture in air (heavier air, more friction etc)
Given only one SVE performance data set exists for each area, all future wells are assumed to perform in the same manner.

Pipe Size Selected **3** inches
Pressure Enterring Manifold **-6.6** in Hg

| Column | (C) | (D) | (E) | (F) | (G) | (H) | (I) | | (J) | (K) | (L) | (M) | (N) | (O) | (P) | (Q) | (R) | (S) | (T) | (U) | (V) | (W) | (X) | (Y) | (Z) | (AA) | (AB) | (AC) | (AD) | (AE) |
|---|---|---|---|---|---|---|---|---|---|---|---|---|---|---|---|---|---|---|---|---|---|---|---|---|---|---|---|---|---|---|
| Item | Pipe ID | | Area A | Length L | | Fitting Loss Coeff K | Flow | | dT (Fan) | Inlet Temperature | | Upstream Pressure | | | Added Static Pressure | Velocity | | Mass Flow | Mass Flow / Area G | | Re | f | Fitting Loss | Equipment Static Loss | Length Losses | Downstream Pressure $P_{out}$ | | Drop | Pressure Change |
| | (in) | (m) | (m2) | (ft) | (m) | | (acfm) | (scfm) | (deg F) | (deg F) | (K) | (Pa) | (in WG) | (in Hg, gauge) | (in WG) | (fpm) | (m/s) | (lbm / min) | (lbm / ft2 min) | (kg / m2 sec) | | | (Pa) | (Pa) | (Pa) | (Pa) | (psi) | (in WG) | (in WG) | |
| ***From Well to Manifold*** | | | | | | | | | | | | | | | | | | | | | | | | | | | | | | |
| Branch Tee | **3** | 0.1 | 0.00 | **1** | 0.3 | 1.08 | 148 | 110 | | 70 | 294.26 | 80998 | -81.8 | -6.0 | | 3022 | 15 | 8.86 | 180 | 14.7 | 61132 | 0.022 | 122 | | 10 | 80866 | -2.97 | -82 | 0.5 | 0% |
| Pipe | **3** | 0.1 | 0.00 | **5** | 1.5 | | 148 | 110 | | 70 | 294.26 | 80866 | -82.3 | -6.0 | | 3022 | 15 | 8.86 | 180 | 14.7 | 61132 | 0.022 | 0 | | 49 | 80818 | -2.98 | -83 | 0.2 | 0% |
| Standard Elbow 90° | **3** | 0.1 | 0.00 | **1** | 0.3 | 0.54 | 148 | 110 | | 70 | 294.26 | 80818 | -82.5 | -6.1 | | 3022 | 15 | 8.86 | 180 | 14.7 | 61132 | 0.022 | 61 | | 10 | 80747 | -2.99 | -83 | 0.3 | 0% |
| Pipe | **3** | 0.1 | 0.00 | **100** | 30.5 | | 148 | 110 | | 70 | 294.26 | 80747 | -82.8 | -6.1 | | 3022 | 15 | 8.86 | 180 | 14.7 | 61132 | 0.022 | 0 | | 979 | 79768 | -3.13 | -87 | 3.9 | 1% |
| Standard Elbow 90° | **3** | 0.1 | 0.00 | **1** | 0.3 | 0.54 | 148 | 108 | | 70 | 294.26 | 79768 | -86.7 | -6.4 | | 3022 | 15 | 8.86 | 180 | 14.7 | 61132 | 0.022 | 61 | | 10 | 79697 | -3.14 | -87 | 0.3 | 0% |
| Pipe | **3** | 0.1 | 0.00 | **15** | 4.6 | | 148 | 108 | | 70 | 294.26 | 79697 | -87.0 | -6.4 | | 3022 | 15 | 8.86 | 180 | 14.7 | 61132 | 0.022 | 0 | | 148 | 79549 | -3.16 | -88 | 0.6 | 0% |
| Standard Elbow 90° | **3** | 0.1 | 0.00 | **1** | 0.3 | 0.54 | 148 | 108 | | 70 | 294.26 | 79549 | -87.6 | -6.4 | | 3022 | 15 | 8.86 | 180 | 14.7 | 61132 | 0.022 | 61 | | 10 | 79478 | -3.17 | -88 | 0.3 | 0% |
| Pipe (in plant) | **3** | 0.1 | 0.00 | **20** | 6.1 | | 148 | 108 | | 70 | 294.26 | 79478 | -87.9 | -6.5 | | 3022 | 15 | 8.86 | 180 | 14.7 | 61132 | 0.022 | 0 | | 198 | 79280 | -3.20 | -89 | 0.8 | 0% |
| Through Tee | **3** | 0.1 | 0.00 | **1** | 0.3 | 0.36 | 148 | 108 | | 70 | 294.26 | 79280 | -88.7 | -6.5 | | 3022 | 15 | 8.86 | 180 | 14.7 | 61132 | 0.022 | 41 | | 10 | 79230 | -3.21 | -89 | 0.2 | 0% |
| Flow Meter | **3** | 0.1 | 0.00 | **1** | 0.3 | **0.8** | 148 | 108 | | 70 | 294.26 | 79230 | -88.9 | -6.5 | | 3022 | 15 | 8.86 | 180 | 14.7 | 61132 | 0.022 | 90 | | 10 | 79130 | -3.22 | -89 | 0.4 | 0% |
| Ball Valve | **3** | 0.1 | 0.00 | **1** | 0.3 | 0.05 | 148 | 107 | | 70 | 294.26 | 79130 | -89.3 | -6.6 | | 3022 | 15 | 8.86 | 180 | 14.7 | 61132 | 0.022 | 6 | | 10 | 79114 | -3.23 | -89 | 0.1 | 0% |
| Combining Tee | **3** | 0.1 | 0.00 | **5** | 1.5 | | 148 | 107 | | 70 | 294.26 | 79114 | -89.4 | -6.6 | | 3022 | 15 | 8.86 | 180 | 14.7 | 61132 | 0.022 | 0 | 100 | 50 | 78964 | -3.25 | -90 | 0.6 | 0% |

**Omega OU1 (On Site Soils)**
**Full Scale OSS Design**
**Pressure Drop Calculations Summary**

Performed by NLS Date 5/13/2013
Checked by JTB Date 5/14/2013

**Purpose**: size pipe for Well ID: VE-6D

Assumption:
Isothermal, change in pressure is less than 10%
No density effects from heating of vapor by fans
No effects from moisture in air (heavier air, more friction etc)
Given only one SVE performance data set exists for each area, all future wells are assumed to perform in the same manner.

Pipe Size Selected **4** inches
Pressure Enterring Manifold **-7.3** in Hg

| Column | (C) | (D) | (E) | (F) | (G) | (H) | (I) | | (J) | (K) | (L) | (M) | (N) | (O) | (P) | (Q) | (R) | (S) | (T) | (U) | (V) | (W) | (X) | (Y) | (Z) | (AA) | (AB) | (AC) | (AD) | (AE) |
|---|---|---|---|---|---|---|---|---|---|---|---|---|---|---|---|---|---|---|---|---|---|---|---|---|---|---|---|---|---|---|
| Item | Pipe ID | | Area A | Length L | | Fitting Loss Coeff K | Flow | | dT (Fan) | Inlet Temperature | | Upstream Pressure | | | Added Static Pressure | Velocity | | Mass Flow | Mass Flow / Area G | | Re | f | Fitting Loss | Equipment Static Loss | Length Losses | Downstream Pressure $P_{out}$ | | Drop | Pressure Change |
| | (in) | (m) | (m2) | (ft) | (m) | | (acfm) | (scfm) | (deg F) | (deg F) | (K) | (Pa) | (in WG) | (in Hg, gauge) | (in WG) | (fpm) | (m/s) | (lbm / min) | (lbm / ft2 min) | (kg / m2 sec) | | | (Pa) | (Pa) | (Pa) | (Pa) | (psi) | (in WG) | (in WG) | |
| ***From Well to Manifold*** | | | | | | | | | | | | | | | | | | | | | | | | | | | | | | |
| Branch Tee | 4 | 0.1 | 0.01 | 1 | 0.3 | 1.02 | 140 | 100 | | 68 | 293.15 | 77612 | -95.4 | -7.0 | | 1607 | 8 | 8.05 | 92 | 7.5 | 41681 | 0.023 | 31 | | 2 | 77578 | -3.45 | -96 | 0.1 | 0% |
| Pipe | 4 | 0.1 | 0.01 | 5 | 1.5 | | 140 | 100 | | 68 | 293.15 | 77578 | -95.5 | -7.0 | | 1607 | 8 | 8.05 | 92 | 7.5 | 41681 | 0.023 | 0 | | 10 | 77568 | -3.45 | -96 | 0.0 | 0% |
| Standard Elbow 90° | 4 | 0.1 | 0.01 | 1 | 0.3 | 0.51 | 140 | 100 | | 68 | 293.15 | 77568 | -95.6 | -7.0 | | 1607 | 8 | 8.05 | 92 | 7.5 | 41681 | 0.023 | 16 | | 2 | 77550 | -3.45 | -96 | 0.1 | 0% |
| Pipe | 4 | 0.1 | 0.01 | 10 | 3.0 | | 140 | 100 | | 68 | 293.15 | 77550 | -95.7 | -7.0 | | 1607 | 8 | 8.05 | 92 | 7.5 | 41681 | 0.023 | 0 | | 21 | 77529 | -3.46 | -96 | 0.1 | 0% |
| Standard Elbow 90° | 4 | 0.1 | 0.01 | 1 | 0.3 | 0.51 | 140 | 100 | | 68 | 293.15 | 77529 | -95.7 | -7.0 | | 1607 | 8 | 8.05 | 92 | 7.5 | 41681 | 0.023 | 16 | | 2 | 77512 | -3.46 | -96 | 0.1 | 0% |
| Pipe | 4 | 0.1 | 0.01 | 70 | 21.3 | | 140 | 100 | | 68 | 293.15 | 77512 | -95.8 | -7.0 | | 1607 | 8 | 8.05 | 92 | 7.5 | 41681 | 0.023 | 0 | | 146 | 77365 | -3.48 | -96 | 0.6 | 0% |
| Standard Elbow 90° | 4 | 0.1 | 0.01 | 1 | 0.3 | 0.51 | 140 | 100 | | 68 | 293.15 | 77365 | -96.4 | -7.1 | | 1607 | 8 | 8.05 | 92 | 7.5 | 41681 | 0.023 | 16 | | 2 | 77348 | -3.48 | -96 | 0.1 | 0% |
| Pipe | 4 | 0.1 | 0.01 | 55 | 16.8 | | 140 | 100 | | 68 | 293.15 | 77348 | -96.5 | -7.1 | | 1607 | 8 | 8.05 | 92 | 7.5 | 41681 | 0.023 | 0 | | 115 | 77232 | -3.50 | -97 | 0.5 | 0% |
| Standard Elbow 90° | 4 | 0.1 | 0.01 | 1 | 0.3 | 0.51 | 140 | 100 | | 68 | 293.15 | 77232 | -96.9 | -7.1 | | 1607 | 8 | 8.05 | 92 | 7.5 | 41681 | 0.023 | 16 | | 2 | 77215 | -3.50 | -97 | 0.1 | 0% |
| Pipe | 4 | 0.1 | 0.01 | 170 | 51.8 | | 140 | 100 | | 68 | 293.15 | 77215 | -97.0 | -7.1 | | 1607 | 8 | 8.05 | 92 | 7.5 | 41681 | 0.023 | 0 | | 357 | 76857 | -3.55 | -98 | 1.4 | 0% |
| Standard Elbow 90° | 4 | 0.1 | 0.01 | 1 | 0.3 | 0.51 | 140 | 99 | | 68 | 293.15 | 76857 | -98.4 | -7.2 | | 1607 | 8 | 8.05 | 92 | 7.5 | 41681 | 0.023 | 16 | | 2 | 76839 | -3.56 | -99 | 0.1 | 0% |
| Pipe | 4 | 0.1 | 0.01 | 15 | 4.6 | | 140 | 99 | | 68 | 293.15 | 76839 | -98.5 | -7.2 | | 1607 | 8 | 8.05 | 92 | 7.5 | 41681 | 0.023 | 0 | | 32 | 76808 | -3.56 | -99 | 0.1 | 0% |
| Standard Elbow 90° | 4 | 0.1 | 0.01 | 1 | 0.3 | 0.51 | 140 | 99 | | 68 | 293.15 | 76808 | -98.6 | -7.2 | | 1607 | 8 | 8.05 | 92 | 7.5 | 41681 | 0.023 | 16 | | 2 | 76790 | -3.56 | -99 | 0.1 | 0% |
| Pipe (in plant - ISVE2) | 4 | 0.1 | 0.01 | 20 | 6.1 | | 140 | 99 | | 68 | 293.15 | 76790 | -98.7 | -7.2 | | 1607 | 8 | 8.05 | 92 | 7.5 | 41681 | 0.023 | 0 | | 42 | 76748 | -3.57 | -99 | 0.2 | 0% |
| Through Tee | 4 | 0.1 | 0.01 | 1 | 0.3 | 0.34 | 140 | 99 | | 68 | 293.15 | 76748 | -98.9 | -7.3 | | 1607 | 8 | 8.05 | 92 | 7.5 | 41681 | 0.023 | 10 | | 2 | 76735 | -3.57 | -99 | 0.1 | 0% |
| Flow Meter | 4 | 0.1 | 0.01 | 1 | 0.3 | 0.8 | 140 | 99 | | 68 | 293.15 | 76735 | -98.9 | -7.3 | | 1607 | 8 | 8.05 | 92 | 7.5 | 41681 | 0.023 | 25 | | 2 | 76709 | -3.57 | -99 | 0.1 | 0% |
| Ball Valve | 4 | 0.1 | 0.01 | 1 | 0.3 | 0.05 | 140 | 99 | | 68 | 293.15 | 76709 | -99.0 | -7.3 | | 1607 | 8 | 8.05 | 92 | 7.5 | 41681 | 0.023 | 2 | | 2 | 76705 | -3.57 | -99 | 0.0 | 0% |
| Combining Tee | 4 | 0.1 | 0.01 | 5 | 1.5 | | 140 | 99 | | 68 | 293.15 | 76705 | -99.1 | -7.3 | | 1607 | 8 | 8.05 | 92 | 7.5 | 41681 | 0.023 | 0 | 100 | 11 | 76595 | -3.59 | -100 | 0.4 | 0% |

**Omega OU1 (On Site Soils)**
**Full Scale OSS Design**
**Pressure Drop Calculations Summary**

Performed by NLS Date 5/13/2013
Checked by JTB Date 5/14/2013

**Purpose**: size pipe for Well ID: VE-7D

Assumption:
Isothermal, change in pressure is less than 10%
No density effects from heating of vapor by fans
No effects from moisture in air (heavier air, more friction etc)
Given only one SVE performance data set exists for each area, all future wells are assumed to perform in the same manner.

Pipe Size Selected **4** inches
Pressure Enterring Manifold **-7.3** in Hg

| Column | (C) | (D) | (E) | (F) | (G) | (H) | (I) | | (J) | (K) | (L) | (M) | (N) | (O) | (P) | (Q) | (R) | (S) | (T) | (U) | (V) | (W) | (X) | (Y) | (Z) | (AA) | (AB) | (AC) | (AD) | (AE) |
|---|---|---|---|---|---|---|---|---|---|---|---|---|---|---|---|---|---|---|---|---|---|---|---|---|---|---|---|---|---|---|
| Item | Pipe ID | | Area A | Length L | | Fitting Loss Coeff K | Flow | | dT (Fan) | Inlet Temperature | | Upstream Pressure | | | Added Static Pressure | Velocity | | Mass Flow | Mass Flow / Area G | | Re | f | Fitting Loss | Equipment Static Loss | Length Losses | Downstream Pressure $P_{out}$ | | Drop | Pressure Change |
| | (in) | (m) | (m2) | (ft) | (m) | | (acfm) | (scfm) | (deg F) | (deg F) | (K) | (Pa) | (in WG) | (in Hg, gauge) | (in WG) | (fpm) | (m/s) | (lbm / min) | (lbm / ft2 min) | (kg / m2 sec) | | | (Pa) | (Pa) | (Pa) | (Pa) | (psi) | (in WG) | (in WG) | |
| ***From Well to Manifold*** | | | | | | | | | | | | | | | | | | | | | | | | | | | | | | |
| Branch Tee | 4 | 0.1 | 0.01 | 1 | 0.3 | 1.02 | 140 | 100 | | 68 | 293.15 | 77612 | -95.4 | -7.0 | | 1607 | 8 | 8.05 | 92 | 7.5 | 41681 | 0.023 | 31 | | 2 | 77578 | -3.45 | -96 | 0.1 | 0% |
| Pipe | 4 | 0.1 | 0.01 | 25 | 7.6 | | 140 | 100 | | 68 | 293.15 | 77578 | -95.5 | -7.0 | | 1607 | 8 | 8.05 | 92 | 7.5 | 41681 | 0.023 | 0 | | 52 | 77526 | -3.46 | -96 | 0.2 | 0% |
| Standard Elbow 90° | 4 | 0.1 | 0.01 | 1 | 0.3 | 0.51 | 140 | 100 | | 68 | 293.15 | 77526 | -95.8 | -7.0 | | 1607 | 8 | 8.05 | 92 | 7.5 | 41681 | 0.023 | 16 | | 2 | 77508 | -3.46 | -96 | 0.1 | 0% |
| Pipe | 4 | 0.1 | 0.01 | 165 | 50.3 | | 140 | 100 | | 68 | 293.15 | 77508 | -95.8 | -7.0 | | 1607 | 8 | 8.05 | 92 | 7.5 | 41681 | 0.023 | 0 | | 345 | 77163 | -3.51 | -97 | 1.4 | 0% |
| Standard Elbow 45° | 4 | 0.1 | 0.01 | 1 | 0.3 | 0.27 | 140 | 99 | | 68 | 293.15 | 77163 | -97.2 | -7.1 | | 1607 | 8 | 8.05 | 92 | 7.5 | 41681 | 0.023 | 8 | | 2 | 77153 | -3.51 | -97 | 0.0 | 0% |
| Pipe | 4 | 0.1 | 0.01 | 60 | 18.3 | | 140 | 99 | | 68 | 293.15 | 77153 | -97.3 | -7.1 | | 1607 | 8 | 8.05 | 92 | 7.5 | 41681 | 0.023 | 0 | | 126 | 77027 | -3.53 | -98 | 0.5 | 0% |
| Standard Elbow 45° | 4 | 0.1 | 0.01 | 1 | 0.3 | 0.27 | 140 | 99 | | 68 | 293.15 | 77027 | -97.8 | -7.2 | | 1607 | 8 | 8.05 | 92 | 7.5 | 41681 | 0.023 | 8 | | 2 | 77016 | -3.53 | -98 | 0.0 | 0% |
| Pipe | 4 | 0.1 | 0.01 | 95 | 29.0 | | 140 | 99 | | 68 | 293.15 | 77016 | -97.8 | -7.2 | | 1607 | 8 | 8.05 | 92 | 7.5 | 41681 | 0.023 | 0 | | 200 | 76816 | -3.56 | -99 | 0.8 | 0% |
| Standard Elbow 90° | 4 | 0.1 | 0.01 | 1 | 0.3 | 0.51 | 140 | 99 | | 68 | 293.15 | 76816 | -98.6 | -7.2 | | 1607 | 8 | 8.05 | 92 | 7.5 | 41681 | 0.023 | 16 | | 2 | 76798 | -3.56 | -99 | 0.1 | 0% |
| Pipe | 4 | 0.1 | 0.01 | 30 | 9.1 | | 140 | 99 | | 68 | 293.15 | 76798 | -98.7 | -7.2 | | 1607 | 8 | 8.05 | 92 | 7.5 | 41681 | 0.023 | 0 | | 63 | 76735 | -3.57 | -99 | 0.3 | 0% |
| Standard Elbow 90° | 4 | 0.1 | 0.01 | 1 | 0.3 | 0.51 | 140 | 99 | | 68 | 293.15 | 76735 | -98.9 | -7.3 | | 1607 | 8 | 8.05 | 92 | 7.5 | 41681 | 0.023 | 16 | | 2 | 76717 | -3.57 | -99 | 0.1 | 0% |
| Pipe | 4 | 0.1 | 0.01 | 15 | 4.6 | | 140 | 99 | | 68 | 293.15 | 76717 | -99.0 | -7.3 | | 1607 | 8 | 8.05 | 92 | 7.5 | 41681 | 0.023 | 0 | | 32 | 76686 | -3.58 | -99 | 0.1 | 0% |
| Standard Elbow 90° | 4 | 0.1 | 0.01 | 1 | 0.3 | 0.51 | 140 | 99 | | 68 | 293.15 | 76686 | -99.1 | -7.3 | | 1607 | 8 | 8.05 | 92 | 7.5 | 41681 | 0.023 | 16 | | 2 | 76668 | -3.58 | -99 | 0.1 | 0% |
| Pipe (in plant) | 4 | 0.1 | 0.01 | 20 | 6.1 | | 140 | 99 | | 68 | 293.15 | 76668 | -99.2 | -7.3 | | 1607 | 8 | 8.05 | 92 | 7.5 | 41681 | 0.023 | 0 | | 42 | 76626 | -3.59 | -99 | 0.2 | 0% |
| Through Tee | 4 | 0.1 | 0.01 | 1 | 0.3 | 0.34 | 140 | 99 | | 68 | 293.15 | 76626 | -99.4 | -7.3 | | 1607 | 8 | 8.05 | 92 | 7.5 | 41681 | 0.023 | 10 | | 2 | 76613 | -3.59 | -99 | 0.1 | 0% |
| Flow Meter | 4 | 0.1 | 0.01 | 1 | 0.3 | 0.8 | 140 | 99 | | 68 | 293.15 | 76613 | -99.4 | -7.3 | | 1607 | 8 | 8.05 | 92 | 7.5 | 41681 | 0.023 | 25 | | 2 | 76587 | -3.59 | -100 | 0.1 | 0% |
| Ball Valve | 4 | 0.1 | 0.01 | 1 | 0.3 | 0.05 | 140 | 99 | | 68 | 293.15 | 76587 | -99.5 | -7.3 | | 1607 | 8 | 8.05 | 92 | 7.5 | 41681 | 0.023 | 2 | | 2 | 76583 | -3.59 | -100 | 0.0 | 0% |
| Combining Tee | 4 | 0.1 | 0.01 | 5 | 1.5 | | 140 | 99 | | 68 | 293.15 | 76583 | -99.6 | -7.3 | | 1607 | 8 | 8.05 | 92 | 7.5 | 41681 | 0.023 | 0 | 100 | 11 | 76472 | -3.61 | -100 | 0.4 | 0% |

**Omega OU1 (On Site Soils)**
**Full Scale OSS Design**
**Pressure Drop Calculations Summary**

Performed by NLS Date 5/8/2013
Checked by JTB Date 5/14/2013

**Purpose**: size pipe for Well ID: VE-10D

Assumption:
Isothermal, change in pressure is less than 10%
No density effects from heating of vapor by fans
No effects from moisture in air (heavier air, more friction etc)
Given only one SVE performance data set exists for each area, all future wells are assumed to perform in the same manner.

Pipe Size Selected **4** inches
Pressure Enterring Manifold **-7.3** in Hg

| Column | (C) | (D) | (E) | (F) | (G) | (H) | (I) | | (J) | (K) | (L) | (M) | (N) | (O) | (P) | (Q) | (R) | (S) | (T) | (U) | (V) | (W) | (X) | (Y) | (Z) | (AA) | (AB) | (AC) | (AD) | (AE) |
|---|---|---|---|---|---|---|---|---|---|---|---|---|---|---|---|---|---|---|---|---|---|---|---|---|---|---|---|---|---|---|
| Item | Pipe ID | | Area A | Length L | | Fitting Loss Coeff K | Flow | | dT (Fan) | Inlet Temperature | | Upstream Pressure | | | Added Static Pressure | Velocity | | Mass Flow | Mass Flow / Area G | | Re | f | Fitting Loss | Equipment Static Loss | Length Losses | Downstream Pressure $P_{out}$ | | Drop | Pressure Change |
| | (in) | (m) | (m2) | (ft) | (m) | | (acfm) | (scfm) | (deg F) | (deg F) | (K) | (Pa) | (in WG) | (in Hg, gauge) | (in WG) | (fpm) | (m/s) | (lbm / min) | (lbm / ft2 min) | (kg / m2 sec) | | | (Pa) | (Pa) | (Pa) | (Pa) | (psi) | (in WG) | (in WG) | |
| ***From Well to Manifold*** | | | | | | | | | | | | | | | | | | | | | | | | | | | | | | |
| Branch Tee | 4 | 0.1 | 0.01 | 1 | 0.3 | 1.02 | 140 | 100 | | 68 | 293.15 | 77612 | -95.4 | -7.0 | | 1607 | 8 | 8.05 | 92 | 7.5 | 41681 | 0.023 | 31 | | 2 | 77578 | -3.45 | -96 | 0.1 | 0% |
| Pipe | 4 | 0.1 | 0.01 | 5 | 1.5 | | 140 | 100 | | 68 | 293.15 | 77578 | -95.5 | -7.0 | | 1607 | 8 | 8.05 | 92 | 7.5 | 41681 | 0.023 | 0 | | 10 | 77568 | -3.45 | -96 | 0.0 | 0% |
| Standard Elbow 90° | 4 | 0.1 | 0.01 | 1 | 0.3 | 0.51 | 140 | 100 | | 68 | 293.15 | 77568 | -95.6 | -7.0 | | 1607 | 8 | 8.05 | 92 | 7.5 | 41681 | 0.023 | 16 | | 2 | 77550 | -3.45 | -96 | 0.1 | 0% |
| Pipe | 4 | 0.1 | 0.01 | 50 | 15.2 | | 140 | 100 | | 68 | 293.15 | 77550 | -95.7 | -7.0 | | 1607 | 8 | 8.05 | 92 | 7.5 | 41681 | 0.023 | 0 | | 104 | 77446 | -3.47 | -96 | 0.4 | 0% |
| Standard Elbow 90° | 4 | 0.1 | 0.01 | 1 | 0.3 | 0.51 | 140 | 100 | | 68 | 293.15 | 77446 | -96.1 | -7.1 | | 1607 | 8 | 8.05 | 92 | 7.5 | 41681 | 0.023 | 16 | | 2 | 77428 | -3.47 | -96 | 0.1 | 0% |
| Pipe | 4 | 0.1 | 0.01 | 50 | 15.2 | | 140 | 100 | | 68 | 293.15 | 77428 | -96.2 | -7.1 | | 1607 | 8 | 8.05 | 92 | 7.5 | 41681 | 0.023 | 0 | | 105 | 77323 | -3.49 | -97 | 0.4 | 0% |
| Standard Elbow 90° | 4 | 0.1 | 0.01 | 1 | 0.3 | 0.51 | 140 | 100 | | 68 | 293.15 | 77323 | -96.6 | -7.1 | | 1607 | 8 | 8.05 | 92 | 7.5 | 41681 | 0.023 | 16 | | 2 | 77306 | -3.49 | -97 | 0.1 | 0% |
| Pipe | 4 | 0.1 | 0.01 | 170 | 51.8 | | 140 | 100 | | 68 | 293.15 | 77306 | -96.6 | -7.1 | | 1607 | 8 | 8.05 | 92 | 7.5 | 41681 | 0.023 | 0 | | 357 | 76949 | -3.54 | -98 | 1.4 | 0% |
| Standard Elbow 90° | 4 | 0.1 | 0.01 | 1 | 0.3 | 0.51 | 140 | 99 | | 68 | 293.15 | 76949 | -98.1 | -7.2 | | 1607 | 8 | 8.05 | 92 | 7.5 | 41681 | 0.023 | 16 | | 2 | 76931 | -3.54 | -98 | 0.1 | 0% |
| Pipe | 4 | 0.1 | 0.01 | 15 | 4.6 | | 140 | 99 | | 68 | 293.15 | 76931 | -98.2 | -7.2 | | 1607 | 8 | 8.05 | 92 | 7.5 | 41681 | 0.023 | 0 | | 32 | 76899 | -3.55 | -98 | 0.1 | 0% |
| Standard Elbow 90° | 4 | 0.1 | 0.01 | 1 | 0.3 | 0.51 | 140 | 99 | | 68 | 293.15 | 76899 | -98.3 | -7.2 | | 1607 | 8 | 8.05 | 92 | 7.5 | 41681 | 0.023 | 16 | | 2 | 76882 | -3.55 | -98 | 0.1 | 0% |
| Pipe (in plant) | 4 | 0.1 | 0.01 | 20 | 6.1 | | 140 | 99 | | 68 | 293.15 | 76882 | -98.4 | -7.2 | | 1607 | 8 | 8.05 | 92 | 7.5 | 41681 | 0.023 | 0 | | 42 | 76840 | -3.56 | -99 | 0.2 | 0% |
| Through Tee | 4 | 0.1 | 0.01 | 1 | 0.3 | 0.34 | 140 | 99 | | 68 | 293.15 | 76840 | -98.5 | -7.2 | | 1607 | 8 | 8.05 | 92 | 7.5 | 41681 | 0.023 | 10 | | 2 | 76827 | -3.56 | -99 | 0.1 | 0% |
| Flow Meter | 4 | 0.1 | 0.01 | 1 | 0.3 | 0.8 | 140 | 99 | | 68 | 293.15 | 76827 | -98.6 | -7.2 | | 1607 | 8 | 8.05 | 92 | 7.5 | 41681 | 0.023 | 25 | | 2 | 76800 | -3.56 | -99 | 0.1 | 0% |
| Ball Valve | 4 | 0.1 | 0.01 | 1 | 0.3 | 0.05 | 140 | 99 | | 68 | 293.15 | 76800 | -98.7 | -7.2 | | 1607 | 8 | 8.05 | 92 | 7.5 | 41681 | 0.023 | 2 | | 2 | 76797 | -3.56 | -99 | 0.0 | 0% |
| Combining Tee | 4 | 0.1 | 0.01 | 5 | 1.5 | | 140 | 99 | | 68 | 293.15 | 76797 | -98.7 | -7.2 | | 1607 | 8 | 8.05 | 92 | 7.5 | 41681 | 0.023 | 0 | 100 | 11 | 76686 | -3.58 | -99 | 0.4 | 0% |

**Omega OU1 (On Site Soils)**
**Full Scale OSS Design**
**Pressure Drop Calculations Summary**

Performed by NLS Date 5/8/2013
Checked by JTB Date 5/14/2013

**Purpose**: size pipe for Well ID: VE-11D

Assumption:
Isothermal, change in pressure is less than 10%
No density effects from heating of vapor by fans
No effects from moisture in air (heavier air, more friction etc)
Given only one SVE performance data set exists for each area, all future wells are assumed to perform in the same manner.

Pipe Size Selected **4** inches
Pressure Enterring Manifold **-7.2** in Hg

| Column | (C) | (D) | (E) | (F) | (G) | (H) | (I) | | (J) | (K) | (L) | (M) | (N) | (O) | (P) | (Q) | (R) | (S) | (T) | (U) | (V) | (W) | (X) | (Y) | (Z) | (AA) | (AB) | (AC) | (AD) | (AE) |
|---|---|---|---|---|---|---|---|---|---|---|---|---|---|---|---|---|---|---|---|---|---|---|---|---|---|---|---|---|---|---|
| Item | Pipe ID | | Area A | Length L | | Fitting Loss Coeff K | Flow | | dT (Fan) | Inlet Temperature | | Upstream Pressure | | | Added Static Pressure | Velocity | | Mass Flow | Mass Flow / Area G | | Re | f | Fitting Loss | Equipment Static Loss | Length Losses | Downstream Pressure $P_{out}$ | | Drop | Pressure Change |
| | (in) | (m) | (m2) | (ft) | (m) | | (acfm) | (scfm) | (deg F) | (deg F) | (K) | (Pa) | (in WG) | (in Hg, gauge) | (in WG) | (fpm) | (m/s) | (lbm / min) | (lbm / ft2 min) | (kg / m2 sec) | | | (Pa) | (Pa) | (Pa) | (Pa) | (psi) | (in WG) | (in WG) | |
| ***From Well to Manifold*** | | | | | | | | | | | | | | | | | | | | | | | | | | | | | | |
| Branch Tee | 4 | 0.1 | 0.01 | 1 | 0.3 | 1.02 | 140 | 100 | | 68 | 293.15 | 77612 | -95.4 | -7.0 | | 1607 | 8 | 8.05 | 92 | 7.5 | 41681 | 0.023 | 31 | | 2 | 77578 | -3.45 | -96 | 0.1 | 0% |
| Pipe | 4 | 0.1 | 0.01 | 5 | 1.5 | | 140 | 100 | | 68 | 293.15 | 77578 | -95.5 | -7.0 | | 1607 | 8 | 8.05 | 92 | 7.5 | 41681 | 0.023 | 0 | | 10 | 77568 | -3.45 | -96 | 0.0 | 0% |
| Standard Elbow 90° | 4 | 0.1 | 0.01 | 1 | 0.3 | 0.51 | 140 | 100 | | 68 | 293.15 | 77568 | -95.6 | -7.0 | | 1607 | 8 | 8.05 | 92 | 7.5 | 41681 | 0.023 | 16 | | 2 | 77550 | -3.45 | -96 | 0.1 | 0% |
| Pipe | 4 | 0.1 | 0.01 | 100 | 30.5 | | 140 | 100 | | 68 | 293.15 | 77550 | -95.7 | -7.0 | | 1607 | 8 | 8.05 | 92 | 7.5 | 41681 | 0.023 | 0 | | 209 | 77341 | -3.48 | -97 | 0.8 | 0% |
| Standard Elbow 90° | 4 | 0.1 | 0.01 | 1 | 0.3 | 0.51 | 140 | 100 | | 68 | 293.15 | 77341 | -96.5 | -7.1 | | 1607 | 8 | 8.05 | 92 | 7.5 | 41681 | 0.023 | 16 | | 2 | 77323 | -3.49 | -97 | 0.1 | 0% |
| Pipe | 4 | 0.1 | 0.01 | 15 | 4.6 | | 140 | 100 | | 68 | 293.15 | 77323 | -96.6 | -7.1 | | 1607 | 8 | 8.05 | 92 | 7.5 | 41681 | 0.023 | 0 | | 31 | 77292 | -3.49 | -97 | 0.1 | 0% |
| Standard Elbow 90° | 4 | 0.1 | 0.01 | 1 | 0.3 | 0.51 | 140 | 100 | | 68 | 293.15 | 77292 | -96.7 | -7.1 | | 1607 | 8 | 8.05 | 92 | 7.5 | 41681 | 0.023 | 16 | | 2 | 77274 | -3.49 | -97 | 0.1 | 0% |
| Pipe (in plant) | 4 | 0.1 | 0.01 | 20 | 6.1 | | 140 | 100 | | 68 | 293.15 | 77274 | -96.8 | -7.1 | | 1607 | 8 | 8.05 | 92 | 7.5 | 41681 | 0.023 | 0 | | 42 | 77232 | -3.50 | -97 | 0.2 | 0% |
| Through Tee | 4 | 0.1 | 0.01 | 1 | 0.3 | 0.34 | 140 | 100 | | 68 | 293.15 | 77232 | -96.9 | -7.1 | | 1607 | 8 | 8.05 | 92 | 7.5 | 41681 | 0.023 | 10 | | 2 | 77220 | -3.50 | -97 | 0.1 | 0% |
| Flow Meter | 4 | 0.1 | 0.01 | 1 | 0.3 | 0.8 | 140 | 100 | | 68 | 293.15 | 77220 | -97.0 | -7.1 | | 1607 | 8 | 8.05 | 92 | 7.5 | 41681 | 0.023 | 25 | | 2 | 77193 | -3.50 | -97 | 0.1 | 0% |
| Ball Valve | 4 | 0.1 | 0.01 | 1 | 0.3 | 0.05 | 140 | 99 | | 68 | 293.15 | 77193 | -97.1 | -7.1 | | 1607 | 8 | 8.05 | 92 | 7.5 | 41681 | 0.023 | 2 | | 2 | 77190 | -3.50 | -97 | 0.0 | 0% |
| Combining Tee | 4 | 0.1 | 0.01 | 5 | 1.5 | | 140 | 99 | | 68 | 293.15 | 77190 | -97.1 | -7.1 | | 1607 | 8 | 8.05 | 92 | 7.5 | 41681 | 0.023 | 0 | 100 | 10 | 77079 | -3.52 | -98 | 0.4 | 0% |

**Omega OU1 (On Site Soils)**
**Full Scale OSS Design**
**Pressure Drop Calculations Summary**

Performed by NLS Date 5/8/2013
Checked by JTB Date 5/14/2013

**Purpose**: size pipe for Well ID: VE-12D

Assumption:
Isothermal, change in pressure is less than 10%
No density effects from heating of vapor by fans
No effects from moisture in air (heavier air, more friction etc)
Given only one SVE performance data set exists for each area, all future wells are assumed to perform in the same manner.

Pipe Size Selected **4** inches
Pressure Enterring Manifold **-7.2** in Hg

| Column | (C) | (D) | (E) | (F) | (G) | (H) | (I) | | (J) | (K) | (L) | (M) | (N) | (O) | (P) | (Q) | (R) | (S) | (T) | (U) | (V) | (W) | (X) | (Y) | (Z) | (AA) | (AB) | (AC) | (AD) | (AE) |
|---|---|---|---|---|---|---|---|---|---|---|---|---|---|---|---|---|---|---|---|---|---|---|---|---|---|---|---|---|---|---|
| Item | Pipe ID | | Area A | Length L | | Fitting Loss Coeff K | Flow | | dT (Fan) | Inlet Temperature | | Upstream Pressure | | | Added Static Pressure | Velocity | | Mass Flow | Mass Flow / Area G | | Re | f | Fitting Loss | Equipment Static Loss | Length Losses | Downstream Pressure $P_{out}$ | | Drop | Pressure Change |
| | (in) | (m) | (m2) | (ft) | (m) | | (acfm) | (scfm) | (deg F) | (deg F) | (K) | (Pa) | (in WG) | (in Hg, gauge) | (in WG) | (fpm) | (m/s) | (lbm / min) | (lbm / ft2 min) | (kg / m2 sec) | | | (Pa) | (Pa) | (Pa) | (Pa) | (psi) | (in WG) | (in WG) | |
| ***From Well to Manifold*** | | | | | | | | | | | | | | | | | | | | | | | | | | | | | | |
| Branch Tee | 4 | 0.1 | 0.01 | 1 | 0.3 | 1.02 | 140 | 100 | | 68 | 293.15 | 77612 | -95.4 | -7.0 | | 1607 | 8 | 8.05 | 92 | 7.5 | 41681 | 0.023 | 31 | | 2 | 77578 | -3.45 | -96 | 0.1 | 0% |
| Pipe | 4 | 0.1 | 0.01 | 5 | 1.5 | | 140 | 100 | | 68 | 293.15 | 77578 | -95.5 | -7.0 | | 1607 | 8 | 8.05 | 92 | 7.5 | 41681 | 0.023 | 0 | | 10 | 77568 | -3.45 | -96 | 0.0 | 0% |
| Standard Elbow 90° | 4 | 0.1 | 0.01 | 1 | 0.3 | 0.51 | 140 | 100 | | 68 | 293.15 | 77568 | -95.6 | -7.0 | | 1607 | 8 | 8.05 | 92 | 7.5 | 41681 | 0.023 | 16 | | 2 | 77550 | -3.45 | -96 | 0.1 | 0% |
| Pipe | 4 | 0.1 | 0.01 | 20 | 6.1 | | 140 | 100 | | 68 | 293.15 | 77550 | -95.7 | -7.0 | | 1607 | 8 | 8.05 | 92 | 7.5 | 41681 | 0.023 | 0 | | 42 | 77508 | -3.46 | -96 | 0.2 | 0% |
| Standard Elbow 90° | 4 | 0.1 | 0.01 | 1 | 0.3 | 0.51 | 140 | 100 | | 68 | 293.15 | 77508 | -95.8 | -7.0 | | 1607 | 8 | 8.05 | 92 | 7.5 | 41681 | 0.023 | 16 | | 2 | 77491 | -3.46 | -96 | 0.1 | 0% |
| Pipe | 4 | 0.1 | 0.01 | 25 | 7.6 | | 140 | 100 | | 68 | 293.15 | 77491 | -95.9 | -7.0 | | 1607 | 8 | 8.05 | 92 | 7.5 | 41681 | 0.023 | 0 | | 52 | 77439 | -3.47 | -96 | 0.2 | 0% |
| Standard Elbow 45° | 4 | 0.1 | 0.01 | 1 | 0.3 | 0.27 | 140 | 100 | | 68 | 293.15 | 77439 | -96.1 | -7.1 | | 1607 | 8 | 8.05 | 92 | 7.5 | 41681 | 0.023 | 8 | | 2 | 77428 | -3.47 | -96 | 0.0 | 0% |
| Pipe | 4 | 0.1 | 0.01 | 60 | 18.3 | | 140 | 100 | | 68 | 293.15 | 77428 | -96.2 | -7.1 | | 1607 | 8 | 8.05 | 92 | 7.5 | 41681 | 0.023 | 0 | | 126 | 77303 | -3.49 | -97 | 0.5 | 0% |
| Standard Elbow 45° | 4 | 0.1 | 0.01 | 1 | 0.3 | 0.27 | 140 | 100 | | 68 | 293.15 | 77303 | -96.7 | -7.1 | | 1607 | 8 | 8.05 | 92 | 7.5 | 41681 | 0.023 | 8 | | 2 | 77292 | -3.49 | -97 | 0.0 | 0% |
| Pipe | 4 | 0.1 | 0.01 | 95 | 29.0 | | 140 | 100 | | 68 | 293.15 | 77292 | -96.7 | -7.1 | | 1607 | 8 | 8.05 | 92 | 7.5 | 41681 | 0.023 | 0 | | 199 | 77093 | -3.52 | -98 | 0.8 | 0% |
| Standard Elbow 90° | 4 | 0.1 | 0.01 | 1 | 0.3 | 0.51 | 140 | 99 | | 68 | 293.15 | 77093 | -97.5 | -7.2 | | 1607 | 8 | 8.05 | 92 | 7.5 | 41681 | 0.023 | 16 | | 2 | 77075 | -3.52 | -98 | 0.1 | 0% |
| Pipe | 4 | 0.1 | 0.01 | 15 | 4.6 | | 140 | 99 | | 68 | 293.15 | 77075 | -97.6 | -7.2 | | 1607 | 8 | 8.05 | 92 | 7.5 | 41681 | 0.023 | 0 | | 32 | 77044 | -3.53 | -98 | 0.1 | 0% |
| Standard Elbow 90° | 4 | 0.1 | 0.01 | 1 | 0.3 | 0.51 | 140 | 99 | | 68 | 293.15 | 77044 | -97.7 | -7.2 | | 1607 | 8 | 8.05 | 92 | 7.5 | 41681 | 0.023 | 16 | | 2 | 77026 | -3.53 | -98 | 0.1 | 0% |
| Pipe (in plant) | 4 | 0.1 | 0.01 | 20 | 6.1 | | 140 | 99 | | 68 | 293.15 | 77026 | -97.8 | -7.2 | | 1607 | 8 | 8.05 | 92 | 7.5 | 41681 | 0.023 | 0 | | 42 | 76984 | -3.53 | -98 | 0.2 | 0% |
| Through Tee | 4 | 0.1 | 0.01 | 1 | 0.3 | 0.34 | 140 | 99 | | 68 | 293.15 | 76984 | -97.9 | -7.2 | | 1607 | 8 | 8.05 | 92 | 7.5 | 41681 | 0.023 | 10 | | 2 | 76971 | -3.54 | -98 | 0.1 | 0% |
| Flow Meter | 4 | 0.1 | 0.01 | 1 | 0.3 | 0.8 | 140 | 99 | | 68 | 293.15 | 76971 | -98.0 | -7.2 | | 1607 | 8 | 8.05 | 92 | 7.5 | 41681 | 0.023 | 25 | | 2 | 76945 | -3.54 | -98 | 0.1 | 0% |
| Ball Valve | 4 | 0.1 | 0.01 | 1 | 0.3 | 0.05 | 140 | 99 | | 68 | 293.15 | 76945 | -98.1 | -7.2 | | 1607 | 8 | 8.05 | 92 | 7.5 | 41681 | 0.023 | 2 | | 2 | 76941 | -3.54 | -98 | 0.0 | 0% |
| Combining Tee | 4 | 0.1 | 0.01 | 5 | 1.5 | | 140 | 99 | | 68 | 293.15 | 76941 | -98.1 | -7.2 | | 1607 | 8 | 8.05 | 92 | 7.5 | 41681 | 0.023 | 0 | 100 | 11 | 76831 | -3.56 | -99 | 0.4 | 0% |

**Omega OU1 (On Site Soils)**
**Full Scale OSS Design**
**Pressure Drop Calculations Summary**

Performed by NLS Date 5/8/2013
Checked by JTB Date 5/14/2013

**Purpose**: size pipe for Well ID: VE-13D

Assumption:
Isothermal, change in pressure is less than 10%
No density effects from heating of vapor by fans
No effects from moisture in air (heavier air, more friction etc)
Given only one SVE performance data set exists for each area, all future wells are assumed to perform in the same manner.

Pipe Size Selected **4** inches
Pressure Enterring Manifold **-7.2** in Hg

| Column | (C) | (D) | (E) | (F) | (G) | (H) | (I) | | (J) | (K) | (L) | (M) | (N) | (O) | (P) | (Q) | (R) | (S) | (T) | (U) | (V) | (W) | (X) | (Y) | (Z) | (AA) | (AB) | (AC) | (AD) | (AE) |
|---|---|---|---|---|---|---|---|---|---|---|---|---|---|---|---|---|---|---|---|---|---|---|---|---|---|---|---|---|---|---|
| Item | Pipe ID | | Area A | Length L | | Fitting Loss Coeff K | Flow | | dT (Fan) | Inlet Temperature | | Upstream Pressure | | | Added Static Pressure | Velocity | | Mass Flow | Mass Flow / Area G | | Re | f | Fitting Loss | Equipment Static Loss | Length Losses | Downstream Pressure $P_{out}$ | | Drop | Pressure Change |
| | (in) | (m) | (m2) | (ft) | (m) | | (acfm) | (scfm) | (deg F) | (deg F) | (K) | (Pa) | (in WG) | (in Hg, gauge) | (in WG) | (fpm) | (m/s) | (lbm / min) | (lbm / ft2 min) | (kg / m2 sec) | | | (Pa) | (Pa) | (Pa) | (Pa) | (psi) | (in WG) | (in WG) | |
| ***From Well to Manifold*** | | | | | | | | | | | | | | | | | | | | | | | | | | | | | | |
| Branch Tee | 4 | 0.1 | 0.01 | 1 | 0.3 | 1.02 | 140 | 100 | | 68 | 293.15 | 77612 | -95.4 | -7.0 | | 1607 | 8 | 8.05 | 92 | 7.5 | 41681 | 0.023 | 31 | | 2 | 77578 | -3.45 | -96 | 0.1 | 0% |
| Pipe | 4 | 0.1 | 0.01 | 5 | 1.5 | | 140 | 100 | | 68 | 293.15 | 77578 | -95.5 | -7.0 | | 1607 | 8 | 8.05 | 92 | 7.5 | 41681 | 0.023 | 0 | | 10 | 77568 | -3.45 | -96 | 0.0 | 0% |
| Standard Elbow 90° | 4 | 0.1 | 0.01 | 1 | 0.3 | 0.51 | 140 | 100 | | 68 | 293.15 | 77568 | -95.6 | -7.0 | | 1607 | 8 | 8.05 | 92 | 7.5 | 41681 | 0.023 | 16 | | 2 | 77550 | -3.45 | -96 | 0.1 | 0% |
| Pipe | 4 | 0.1 | 0.01 | 20 | 6.1 | | 140 | 100 | | 68 | 293.15 | 77550 | -95.7 | -7.0 | | 1607 | 8 | 8.05 | 92 | 7.5 | 41681 | 0.023 | 0 | | 42 | 77508 | -3.46 | -96 | 0.2 | 0% |
| Standard Elbow 90° | 4 | 0.1 | 0.01 | 1 | 0.3 | 0.51 | 140 | 100 | | 68 | 293.15 | 77508 | -95.8 | -7.0 | | 1607 | 8 | 8.05 | 92 | 7.5 | 41681 | 0.023 | 16 | | 2 | 77491 | -3.46 | -96 | 0.1 | 0% |
| Pipe | 4 | 0.1 | 0.01 | 45 | 13.7 | | 140 | 100 | | 68 | 293.15 | 77491 | -95.9 | -7.0 | | 1607 | 8 | 8.05 | 92 | 7.5 | 41681 | 0.023 | 0 | | 94 | 77397 | -3.47 | -96 | 0.4 | 0% |
| Standard Elbow 45° | 4 | 0.1 | 0.01 | 1 | 0.3 | 0.27 | 140 | 100 | | 68 | 293.15 | 77397 | -96.3 | -7.1 | | 1607 | 8 | 8.05 | 92 | 7.5 | 41681 | 0.023 | 8 | | 2 | 77386 | -3.48 | -96 | 0.0 | 0% |
| Pipe | 4 | 0.1 | 0.01 | 70 | 21.3 | | 140 | 100 | | 68 | 293.15 | 77386 | -96.3 | -7.1 | | 1607 | 8 | 8.05 | 92 | 7.5 | 41681 | 0.023 | 0 | | 147 | 77240 | -3.50 | -97 | 0.6 | 0% |
| Standard Elbow 45° | 4 | 0.1 | 0.01 | 1 | 0.3 | 0.27 | 140 | 100 | | 68 | 293.15 | 77240 | -96.9 | -7.1 | | 1607 | 8 | 8.05 | 92 | 7.5 | 41681 | 0.023 | 8 | | 2 | 77229 | -3.50 | -97 | 0.0 | 0% |
| Pipe | 4 | 0.1 | 0.01 | 30 | 9.1 | | 140 | 100 | | 68 | 293.15 | 77229 | -97.0 | -7.1 | | 1607 | 8 | 8.05 | 92 | 7.5 | 41681 | 0.023 | 0 | | 63 | 77166 | -3.51 | -97 | 0.3 | 0% |
| Standard Elbow 90° | 4 | 0.1 | 0.01 | 1 | 0.3 | 0.51 | 140 | 99 | | 68 | 293.15 | 77166 | -97.2 | -7.1 | | 1607 | 8 | 8.05 | 92 | 7.5 | 41681 | 0.023 | 16 | | 2 | 77149 | -3.51 | -97 | 0.1 | 0% |
| Pipe | 4 | 0.1 | 0.01 | 15 | 4.6 | | 140 | 99 | | 68 | 293.15 | 77149 | -97.3 | -7.1 | | 1607 | 8 | 8.05 | 92 | 7.5 | 41681 | 0.023 | 0 | | 31 | 77117 | -3.52 | -97 | 0.1 | 0% |
| Standard Elbow 90° | 4 | 0.1 | 0.01 | 1 | 0.3 | 0.51 | 140 | 99 | | 68 | 293.15 | 77117 | -97.4 | -7.1 | | 1607 | 8 | 8.05 | 92 | 7.5 | 41681 | 0.023 | 16 | | 2 | 77099 | -3.52 | -97 | 0.1 | 0% |
| Pipe (in plant) | 4 | 0.1 | 0.01 | 20 | 6.1 | | 140 | 99 | | 68 | 293.15 | 77099 | -97.5 | -7.2 | | 1607 | 8 | 8.05 | 92 | 7.5 | 41681 | 0.023 | 0 | | 42 | 77057 | -3.52 | -98 | 0.2 | 0% |
| Through Tee | 4 | 0.1 | 0.01 | 1 | 0.3 | 0.34 | 140 | 99 | | 68 | 293.15 | 77057 | -97.6 | -7.2 | | 1607 | 8 | 8.05 | 92 | 7.5 | 41681 | 0.023 | 10 | | 2 | 77045 | -3.53 | -98 | 0.1 | 0% |
| Flow Meter | 4 | 0.1 | 0.01 | 1 | 0.3 | 0.8 | 140 | 99 | | 68 | 293.15 | 77045 | -97.7 | -7.2 | | 1607 | 8 | 8.05 | 92 | 7.5 | 41681 | 0.023 | 25 | | 2 | 77018 | -3.53 | -98 | 0.1 | 0% |
| Ball Valve | 4 | 0.1 | 0.01 | 1 | 0.3 | 0.05 | 140 | 99 | | 68 | 293.15 | 77018 | -97.8 | -7.2 | | 1607 | 8 | 8.05 | 92 | 7.5 | 41681 | 0.023 | 2 | | 2 | 77015 | -3.53 | -98 | 0.0 | 0% |
| Combining Tee | 4 | 0.1 | 0.01 | 5 | 1.5 | | 140 | 99 | | 68 | 293.15 | 77015 | -97.8 | -7.2 | | 1607 | 8 | 8.05 | 92 | 7.5 | 41681 | 0.023 | 0 | 100 | 11 | 76904 | -3.55 | -98 | 0.4 | 0% |

Omega Chemical Superfund site
Whittier, CA
DPE System
Extraction Well Detail for **DPE-4** @ 4 gpm

Performed by IL Date 6/21/2013
Checked by JTB Date 7/12/2013

Assumptions: All other pumps will be closer to the existing pipeline, and therefore should have lesser TDH requirements.

Specific Roughness (ft): 5.00E-06
Kinematic viscosity (ft2/sec): 0.000013
Hazen Williams roughness coefficient: 140

**TDH Required** 10.0 ft

| | | Flow (gpm) | Pipe ID (in) | Velocity (fps) | Re | f | Length (ft) | Fitting K | QTY | Head Loss (pipe) by Hazaen Williams (ft) | Head Loss (pipe) by Darcy Weisbach (ft) | Head Loss (fitting) Scale Velocity Head by K (ft) | Head Loss (Equipment) (ft) | |
|---|---|---|---|---|---|---|---|---|---|---|---|---|---|---|
| **From DPE-4 to Eq Tank** | | | | | | | | | | | | | | |
| PUMP HERE | | | | | | | | | | | | | | |
| Riser | | 4 | 1.25 | 1.05 | 8.38E+03 | 0.03261 | 92.0 | | | 0.4513 | 0.490 | | 92 | Required Static Lift, assume water level to be 82 feet bgs and assume pump placement at 10 feet below WL. |
| **Vault** | | | | | | | | | | | | | | |
| Decreaser | | 4 | 0.75 | 2.90 | | | | 0.3 | 1 | | | 0.042 | | |
| Flow Meter | | 4 | 0.75 | 2.90 | | | | | | | | | 5 | Estimated Losses (worst case) |
| Increaser | | 4 | 2 | 0.41 | | | | 0.7 | 1 | | | 0.002 | | |
| Standard Elbow 90° | | 4 | 2 | 0.41 | | | | 0.57 | 5 | | | 0.007 | | |
| Through Tee | | 4 | 2 | 0.41 | | | | 0.38 | 2 | | | 0.002 | | |
| Swing Check Valve | | 4 | 2 | 0.41 | | | | 1.9 | 1 | | | 0.005 | | |
| Ball Valve | | 4 | 2 | 0.41 | | | | 0.06 | 1 | | | 0.000 | | |
| Ball Valve | | 4 | 2 | 0.41 | | | | 0.06 | 1 | | | 0.000 | | |
| Total Pipe in Vault | | 4 | 2 | 0.41 | 5.24E+03 | 0.03736 | 10 | | | 0.0050 | 0.006 | | | Conservative |
| Increaser | | 4 | 2 | 0.41 | | | | 0.0 | 1 | | | 0.000 | | |
| **Pipe to DPE-3** | | | | | | | | | | | | | | |
| Pipe | | 4 | 2 | 0.41 | 5.24E+03 | 0.03736 | 120 | | | 0.0598 | 0.070 | | | |
| **DPE-3 Vault** | | | | | | | | | | | | | | |
| Total pipe in vault | | 4 | 2 | 0.41 | 5.24E+03 | 0.03736 | 10 | | | 0.0050 | 0.006 | | | |
| Standard Elbow 90° | | 4 | 2 | 0.41 | | | | 0.57 | 1 | | | 0.001 | | |
| Tee - Combining Flow | DPE-3 | 8 | 2 | 0.82 | | | | 2.5 | 1 | | | 0.026 | | |
| **Pipe to DPE-8** | | | | | | | | | | | | | | |
| Pipe | | 8 | 2 | 0.82 | 1.05E+04 | 0.03064 | 90 | | | 0.1617 | 0.172 | | | |
| **DPE-8 Vault** | | | | | | | | | | | | | | |
| Total pipe in vault | | 8 | 2 | 0.82 | 1.05E+04 | 0.03064 | 10 | | | 0.0180 | 0.019 | | | |
| Standard Elbow 90° | | 8 | 2 | 0.82 | | | | 0.57 | 1 | | | 0.006 | | |
| Tee - Combining Flow | DPE-8 | 12 | 2 | 1.23 | | | | 2.5 | 1 | | | 0.058 | | |
| **Pipe to DPE-5** | | | | | | | | | | | | | | |
| Pipe | | 12 | 2 | 1.23 | 1.57E+04 | 0.02752 | 115 | | | 0.4374 | 0.443 | | | |
| Standard Elbow 90° | | 12 | 2 | 1.23 | | | | 0.57 | 2 | | | 0.027 | | |
| **DPE-5 Vault** | | | | | | | | | | | | | | |
| Total pipe in vault | | 12 | 2 | 1.23 | 1.57E+04 | 0.02752 | 10 | | | 0.0380 | 0.039 | | | |
| Tee - Combining Flow | DPE-5 | 16 | 2 | 1.63 | | | | 2.5 | 1 | | | 0.104 | | |
| **Pipe to DPE-9** | | | | | | | | | | | | | | |
| Pipe | | 16 | 2 | 1.63 | 2.09E+04 | 0.02559 | 113 | | | 0.7318 | 0.720 | | | |
| Standard Elbow 90° | | 16 | 2 | 1.63 | | | | 0.57 | 1 | | | 0.024 | | |
| **DPE-9 Vault** | | | | | | | | | | | | | | |
| Total pipe in vault | | 16 | 2 | 1.63 | 2.09E+04 | 0.02559 | 10 | | | 0.0648 | 0.064 | | | |
| Standard Elbow 90° | | 16 | 2 | 1.63 | | | | 0.57 | 1 | | | 0.024 | | |
| Tee - Combining Flow | DPE-9 | 20 | 2 | 2.04 | | | | 2.5 | 1 | | | 0.162 | | |
| **Pipe to Existing GW Conveyance** | | | | | | | | | | | | | | |
| Pipe | | 20 | 2 | 2.04 | 2.62E+04 | 0.02424 | 35 | | | 0.3425 | 0.330 | | | |
| Tee - Combining Flow | EW-1 | 22.5 | 3 | 1.02 | | | | 2.5 | 1 | | | 0.040 | | assume EW-1 flow of 2.5 gpm |
| Pipe | | 22.5 | 3 | 1.02 | 1.96E+04 | 0.02598 | 20 | | | 0.0338 | 0.034 | | | |
| Tee - Combining Flow | EW-2 | 32.5 | 3 | 1.48 | | | | 2.5 | 1 | | | 0.084 | | assume EW-2 flow of 10 gpm |
| Pipe | | 32.5 | 3 | 1.48 | 2.84E+04 | 0.02375 | 70 | | | 0.2339 | 0.225 | | | |
| Tee - Combining Flow | EW-3 | 33 | 3 | 1.50 | | | | 2.5 | 1 | | | 0.087 | | assume EW-3 flow of 0.5 gpm |
| Pipe | | 33 | 3 | 1.50 | 2.88E+04 | 0.02366 | 90 | | | 0.3093 | 0.297 | | | |
| Tee - Combining Flow | EW-4 | 33.5 | 3 | 1.52 | | | | 2.5 | 1 | | | 0.090 | | assume EW-4 flow of 0.5 gpm |
| Pipe | | 33.5 | 3 | 1.52 | 2.92E+04 | 0.02358 | 95 | | | 0.3357 | 0.322 | | | |
| Tee - Combining Flow | EW-5 | 34 | 3 | 1.54 | | | | 2.5 | 1 | | | 0.092 | | assume EW-5 flow of 0.5 gpm |
| **Pipe to GWTS** | | | | | | | | | | | | | | |
| Pipe to GWTS | | 34 | 3 | 1.54 | 2.97E+04 | 0.02350 | 700 | | | 2.5425 | 2.435 | | | |
| Standard Elbow 90° | | 34 | 3 | 1.54 | | | | 0.54 | 9 | | | 0.180 | | |
| **Inside GWTS** | | | | | | | | | | | | | | |
| Through Tee | | 34 | 3 | 1.54 | | | | 0.36 | 2 | | | 0.027 | | |
| Ball Valve | | 34 | 3 | 1.54 | | | | 0.05 | 2 | | | 0.004 | | |
| Branch Tee | | 34 | 3 | 1.54 | | | | 1.08 | 1 | | | 0.040 | | |
| Bag Filters | | 34 | 3 | 1.54 | | | | | | | | | 0.1617 | assume pressure drop across filter bag at 0.07 p |
| Ball Valve | | 34 | 3 | 1.54 | | | | 0.05 | 1 | | | 0.002 | | |
| Branch Tee | | 34 | 3 | 1.54 | | | | 1.08 | 1 | | | 0.040 | | |
| Through Tee | | 34 | 3 | 1.54 | | | | 0.36 | 3 | | | 0.040 | | |
| Pipe to AS | | 34 | 3 | 1.54 | 2.97E+04 | 0.02350 | 25 | | | 0.0908 | 0.087 | | 10 | assume AS to be 10 feet in height |

| | | |
|---|---|---|
| Total Losses (Frictional and Static) | **114.2** ft | |
| Total Losses (Frictional and Static) | **49.5** psi | |
| Residual Total Dynamic Head Desired After Losses | **10.0** psi | Safety |
| Total Dynamic Head Required for Pump | **59.5** psi | |
| Total Dynamic Head Required for Pump | **137.3** ft | |

Omega Chemical Superfund site
Whittier, CA
DPE System
Extraction Well Detail for **DPE-4** @ 4 gpm

Performed by IL Date 6/21/2013
Checked by JTB Date 7/12/2013

Assumptions: All other pumps will be closer to the existing pipeline, and therefore should have lesser TDH requirements.

Specific Roughness (ft): 5.00E-06
Kinematic viscosity (ft2/sec): 0.000013
Hazen Williams roughness coefficient: 140

**TDH Required** 10.0 ft

| Flow (gpm) | Pipe ID (in) | Velocity (fps) | Re | f | Length (ft) | Fitting K | QTY | Head Loss (pipe) by Hazaen Williams (ft) | Head Loss (pipe) by Darcy Weisbach (ft) | Head Loss (fitting) Scale Velocity Head by K (ft) | Head Loss (Equipment) (ft) |
|---|---|---|---|---|---|---|---|---|---|---|---|

**10 SQ, SQE**

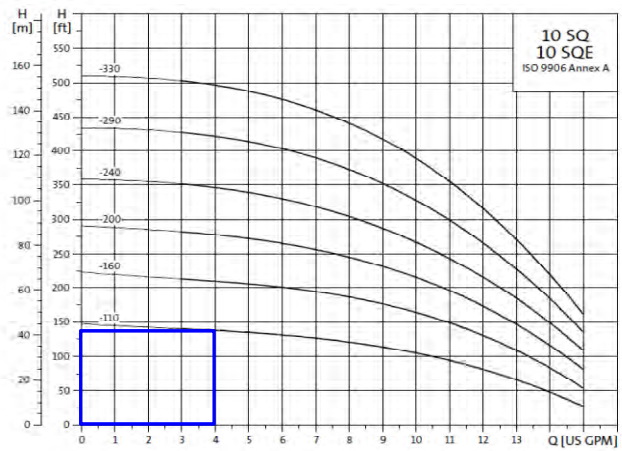


| Well | DPE-4 | | |
|---|---|---|---|
| **PUMP SELECTED:** | **10SQ05-110** | **0.5** | **hp** |
| | gpm | | |
| **DESIGN FLOW** | **4** | | **137.3 FT TDH** |

# Appendix B
# Preliminary Design Drawings

# ONSITE SOILS FULL SCALE SOIL VAPOR EXTRACTION AND DUAL PHASE EXTRACTION

# 12504 / 12512 EAST WHITTIER BOULEVARD

## 12471 WASHINGTON BOULEVARD

## WHITTIER, CALIFORNIA

## JULY 2013

SITE

**VICINITY MAP**

0 1 2 3 4 5
MILES

PROJECT AREA

**LOCATION PLAN**

700 350 0 700
FEET

N

# CDM SMITH INC.

DRAWING LIST


GENERAL

G-1 TITLE SHEET AND DRAWING LIST

CIVIL

C-1 CIVIL LEGEND AND NOTES
C-2 GENERAL CIVIL NOTES
C-3 SITE PLAN
C-4 SOIL VAPOR EXTRACTION WELLS AND SCHEDULE
C-5 DUAL PHASE EXTRACTION WELLHEAD CONSTRUCTION DETAILS AND SCHEDULE
C-6 TRENCH SECTIONS AND DETAILS

ELECTRICAL

E-1 ELECTRICAL LEGEND AND NOTES
E-2 RISER DIAGRAM, LOAD COMPUTATION, AND CONDUIT AND WIRE LEGEND – PLANT 1
E-3 ELECTRICAL POWER AND CONTROL PLAN – PLANT 1
E-4 RISER DIAGRAM, LOAD COMPUTATION AND CONDUIT AND WIRE LEGEND – PLANT 2
E-5 EXISTING MOTOR CONTROL CENTER MCC-GWTS MODIFICATIONS SINGLE-LINE/ELEVATION
E-6 GWTS-NEW DPE PUMP CONTROL BLOCK DIAGRAM

MECHANICAL

M-1 MECHANICAL PLAN – PLANT 1
M-2 MECHANICAL PLAN – PLANT 2

INSTRUMENTATION

I-1 PIPING AND INSTRUMENTATION DIAGRAM – LEGEND I
I-2 PIPING AND INSTRUMENTATION DIAGRAM – LEGEND II
I-3 PIPING AND INSTRUMENTATION DIAGRAM – SVE1
I-4 PIPING AND INSTRUMENTATION DIAGRAM – SVE2
I-5 PIPING AND INSTRUMENTATION DIAGRAM – GROUNDWATER AND DUAL PHASE EXTRACTION WELLS


REGISTERED PROFESSIONAL ENGINEER
RAVI SUBRAMANIAN
No. C053679
Exp. 06-30-2015
CIVIL
STATE OF CALIFORNIA

| REV. NO. | DATE | DRWN | CHKD | REMARKS |
|---|---|---|---|---|
| 3 | 7/12/13 | PJR | IL | REVISED FOR PDR SUBMITTAL |
| 2 | 5/17/13 | PJR | DDN | REVISED FOR PDR SUBMITTAL |
| 1 | 10/24/12 | PJR | JTB | PDR SUBMITTAL |

**PRELIMINARY DESIGN NOT FOR CONSTRUCTION**


CDM Smith
111 Academy Way, Suite 150
Irvine, California, 92617
Tel: (949) 752-5452



C:\cdmxm\riehlepj\d1257128\ G-1 07/11/13 07:27 riehlepj XREFS: PRELIM NOT FOR CONST, CA-Ravi-S-2013

## SYMBOL NOTES

1. BOLD ITEMS: CONTRACTOR TO FURNISH AND INSTALL FOR THIS CONTRACT. (CONTRACTOR TO ASSUME ALL WORK IS NEW UNLESS NOTED).
2. SHADED ITEMS: EXISTING

2.1 MUNICIPAL UTILITIES: EXISTING

## SYMBOLS

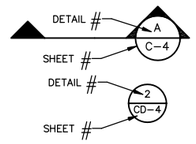


SECTION CALLOUT

DETAIL CALLOUT

## PIPING LEGEND

### MATERIAL CODES

| | |
|---|---|
| PVC | SCHEDULE 40 PVC |
| HDPE | HIGH DENSITY POLYETHYLENE (SDR-11 FOR INTERIOR WALL IN DOUBLE WALL PIPING AND FOR SINGLE WALL PIPE, AND SDR-17 FOR EXTERIOR PIPE IN DOUBLE WALL PIPING.) |

### FLUID/MISCELLANEOUS ABBREVIATIONS

| | |
|---|---|
| EGW | EXTRACTED GROUNDWATER |
| PV | PROCESS VAPOR |
| SV | SOIL VAPOR |

### PIPE LINE SYMBOLS

SINGLE PIPE, SINGLE WALL — 3"-SV-HDPE
- PIPE SIZE IN INCHES
- PROCESS FLUID
- PIPE MATERIAL

(SEE LEGEND THIS SHEET)

SINGLE PIPE, DOUBLE WALL — 3"(6")-EGW-HDPE(HDPE)
- INSIDE PIPE IN INCHES
- OUTSIDE PIPE
- FLUID
- INSIDE PIPE MATERIAL
- OUTSIDE PIPE MATERIAL

MULTIPLE PIPE, ALL SINGLE WALL, SAME SIZE AND MATERIAL — (4) X 3"-SV-HDPE
- NUMBER OF PIPES
- PIPE SIZE IN INCHES
- PROCESS FLUID
- PIPE MATERIAL

(SEE LEGEND THIS SHEET)

## SVE WELL AND PIPING SYMBOLS

- EXISTING GROUNDWATER CONVEYANCE LINE
- EXISTING SOIL VAPOR CONVEYANCE LINE
- NEW EXTRACTED GROUNDWATER CONVEYANCE LINE
- NEW EXTRACTED SOIL VAPOR CONVEYANCE LINE
- NEW ELECTRICAL CONDUIT
- DPE-1 ● NEW DUAL PHASE EXTRACTION WELL LOCATION AND DESIGNATION
- VE-36S / VE-2D ⊙ NEW SOIL VAPOR EXTRACTION WELL LOCATION AND DESIGNATION
- FRR-VMP-13 ⊗ EXISTING FRR VAPOR MONITORING PROBE LOCATION AND DESIGNATION
- VMP-61 ⊗ EXISTING VAPOR MONITORING PROBE LOCATION AND DESIGNATION
- EW-5 EXISTING GROUNDWATER EXTRACTION WELL LOCATION AND DESIGNATION
- VE-8S ◉ EXISTING ISVE1 (PLANT 1) VAPOR EXTRACTION WELL LOCATION AND DESIGNATION
- VE-30S • EXISTING ISVE2 (PLANT 2) VAPOR EXTRACTION WELL LOCATION AND DESIGNATION

## UTILITY SYMBOLS

| SYMBOL | FEATURE |
|---|---|
| MH-14 WEST INV 27.35 EAST INV 32.50 — 8-SS-PVC | SANITARY SEWER AND MANHOLE |
| MH-22 EAST INV 32.75 WEST INV 32.50 — 8-SD-XX; CB-1 INV 33.75 | STORM DRAIN, MANHOLE, AND CATCH BASIN |
| 12-FPW-PVC — FH | FIRE LINE W/ FIRE HYDRANT ASSEMBLY (INCLUDES VALVE) |
| 4-FPW-PVC — FDC | FIRE DEPARTMENT CONNECTION |
| 12-SD-PVC — C.O. | CLEANOUT |
| 12-FPW-PVC — B.O. | BLOWOFF |
| 6-SS-PVC | FORCE MAIN |
| 6-W-PVC | OTHER PIPELINE CALLOUT |
| | PIPE MATERIAL (OPTIONAL) |
| | ABBREVIATED PROCESS LINE DESCRIPTION |
| | PIPE DIAMETER (IN INCHES) |
| | PROPERTY LINE |

## ABBREVIATIONS

| | |
|---|---|
| AC | ASPHALT CONCRETE |
| BGS | BELOW GROUND SURFACE |
| CMP | CORRUGATED METAL PIPE |
| d | DEPTH TO SIGNAL |
| DPE | DUAL PHASE EXTRACTION |
| E | ELECTRICAL LINE |
| (EOS) | END OF SIGNAL DETECTION |
| G | GAS/PETROLEUM PIPELINE |
| INV | INVERT OF PIPE |
| PCC | PORTLAND CONCRETE CEMENT |
| RCP | REINFORCED CONCRETE PIPE |
| RW | RECLAIMED WATER PIPELINE |
| SD | STORM DRAIN PIPELINE |
| SS | SANITARY SEWER PIPELINE |
| SPPWC | STANDARD PLANS FOR PUBLIC WORKS CONSTRUCTION, 2009 EDITION |
| SSPWC | STANDARD SPECIFICATIONS FOR PUBLIC WORKS CONSTRUCTION, 2009 EDITION |
| SVE | SOIL VAPOR EXTRACTION |
| TC | TELECOMMUNICATIONS/CABLE |
| UNO | UNLESS NOTED OTHERWISE |
| VEW | VAPOR EXTRACTION WELL |
| VMP | VAPOR MONITORING PROBE |
| W | WATER PIPELINE |

## UTILITY DETECTION NOTES

(FOR UTILITIES SHOWN SOUTHWEST OF THE PUTNAM STREET CENTERLINE ONLY)

NOTE: ALL ELECTRONIC UTILITY DETECTING IS ACCOMPLISHED BY INDIRECT SIGNAL-MEASUREMENT METHODS. NO WARRANTY IS IMPLIED OR EXPRESSED, DUE TO THE NATURE OF THE METHODOLOGY. POT-HOLING IS RECOMMENDED FOR ALL POSSIBLE UTILITY CONFLICTS AND STANDARD UNDERGROUND SERVICE ALERT IS REQUIRED.

CERTAIN UTILITIES, INCLUDING, BUT NOT LIMITED TO FIBER OPTICS, CANNOT BE DETECTED VIA THIS DETECTION.

UTILITIES THAT ARE NON-CONDUCTIVE, OR HAVE NO SURFACE FEATURES, OR BREAKS IN CONTINUITY ARE NOT INCLUDED IN THIS SURVEY.

DEPTHS SHOWN TO SD PIPES ARE TO "INVERT", DEPTHS TO CONDUCTIVE UTILITIES ARE TYPICALLY TO THE CENTER OF THE SIGNAL/UTILITY, UNO.

1) UTILITY LOCATIONS CONFORM TO ASCE STANDARD 38-02 FOR SUBSURFACE UTILITY ENGINEERING (SUE).
2) UTILITY QUALITY LEVELS DESCRIBED AS FOLLOWS:
   QUALITY LEVEL "D" INFORMATION COMES SOLELY FROM EXISTING UTILITY RECORDS.
   QUALITY LEVEL "C" INVOLVES SURVEYING VISIBLE ABOVE-GROUND UTILITY FACILITIES, SUCH AS MANHOLES, VALVE BOXES, POSTS, ETC., AND CORRELATING THIS INFORMATION WITH EXISTING UTILITY RECORDS AND INCORPORATING METHODS OF LEVEL "D".
   QUALITY LEVEL "B" INVOLVES THE USE OF SURFACE RADIO-DETECTIONAL TECHNIQUES TO DETERMINE THE EXISTENCE AND HORIZONTAL POSITION OF UNDERGROUND UTILITIES, AND INCORPORATING METHODS OF "D" AND "C".
   QUALITY LEVEL "A" INVOLVES THE USE OF NON-DESTRUCTIVE DIGGING EQUIPMENT AT CRITICAL POINTS TO DETERMINE THE PRECISE HORIZONTAL AND VERTICAL POSITION OF UNDERGROUND UTILITIES, AS WELL AS THE TYPE, SIZE, CONDITION, MATERIAL, AND OTHER CHARACTERISTICS.
3) THE UNDERGROUND UTILITY LOCATIONS SHOWN HEREON REPRESENT A PROFESSIONAL OPINION AND INTERPRETATION BASED ON RECORD INDICATIONS AND FIELD EVIDENCE INCLUDING THE USE OF ELECTRONIC UTILITY DETECTION EQUIPMENT. THE RESULTS OF THIS UTILITY INVESTIGATION MAY BE AFFECTED BY THE AVAILABILITY OF UTILITY RECORD INFORMATION AND A VARIETY OF EXISTING SITE CONDITIONS. SITE CONDITIONS THAT MAY AFFECT THE RELIABILITY OF DETECTED UTILITY LOCATIONS INCLUDE SOIL CONTENT, DEPTH OF UTILITY, DENSITY OF UTILITY CLUSTERS, AND ELECTRO-MAGNETIC CHARACTERISTICS OF THE TARGET UTILITIES.
4) SEE ADDITIONAL REQUIREMENTS ON DRAWING C-2.

**PRELIMINARY DESIGN**
**NOT FOR CONSTRUCTION**

CALL BEFORE YOU DIG:
UNDERGROUND SERVICE ALERT OF SOUTHERN CALIFORNIA
TWO WORKING DAYS BEFORE YOU DIG
1-800-227-2600

REGISTERED PROFESSIONAL ENGINEER — RAVI SUBRAMANIAN — No. C053679 Exp. 06-30-2015 — CIVIL — STATE OF CALIFORNIA

| REV. NO. | DATE | DRWN | CHKD | REMARKS |
|---|---|---|---|---|
| 3 | 7/12/13 | PJR | IL | REVISED FOR PDR SUBMITTAL |
| 2 | 5/17/13 | PJR | DDN | REVISED FOR PDR SUBMITTAL |
| 1 | 10/24/12 | PJR | JTB | PDR SUBMITTAL |

DESIGNED BY: NLS
DRAWN BY: PJR
SHEET CHK'D BY: NLS
CROSS CHK'D BY: JTB
APPROVED BY: RS
DATE: JULY 2013

CDM Smith
111 Academy Way, Suite 150
Irvine, California, 92617
Tel: (949) 752-5452

OMEGA CHEMICAL SUPERFUND SITE
12504 / 12512 EAST WHITTIER BOULEVARD
12471 WASHINGTON BOULEVARD
WHITTIER, CALIFORNIA

CIVIL LEGEND AND NOTES

PROJECT NO. 10500-97768
FILE NAME: C-1
SHEET NO. C-1

C:\cdmxm\riehlepj\d1257128\ C-1 07/11/13 07:34 riehlepj XREFS: CDMS_2234-FULL SVE, PRELIM NOT FOR CONST, CWPL-SL1
©2012 CDM SMITH ALL RIGHTS RESERVED.
REUSE OF DOCUMENTS: THESE DOCUMENTS AND DESIGNS PROVIDED BY PROFESSIONAL SERVICE, INCORPORATED HEREIN, ARE THE PROPERTY OF CDM SMITH AND ARE NOT TO BE USED, IN WHOLE OR PART, FOR ANY OTHER PROJECT WITHOUT THE WRITTEN AUTHORIZATION OF CDM SMITH.

# GENERAL NOTES:

1. ALL WORK SHALL BE PERFORMED IN ACCORDANCE WITH ALL APPLICABLE FEDERAL, STATE, AND LOCAL CODES AND REQUIREMENTS.

2. CONTRACTOR SHALL BE RESPONSIBLE FOR VERIFYING ALL DIMENSIONS AND LOCATIONS SHOWN PRIOR TO COMMENCING WORK. ANY CONFLICTS WITH DETAILS AND NOTES SHALL BE BROUGHT TO THE IMMEDIATE ATTENTION OF THE ENGINEER IN WRITING.

3. WHERE CONFLICTS EXIST, THE CONTRACTOR SHALL NOTIFY THE ENGINEER IN WRITING IMMEDIATELY. NO CHANGES OR ADDITIONS TO THE SCOPE OF WORK DEPICTED HEREIN SHALL BE MADE WITHOUT PRIOR APPROVAL OF THE ENGINEER.

4. CONTRACTOR SHALL SECURE ALL APPLICABLE EXCAVATION, ENCROACHMENT, GRADING AND CONSTRUCTION PERMITS FROM APPROPRIATE AGENCIES PRIOR TO COMMENCING WORK. CONTRACTOR SHALL MAINTAIN COPIES OF ANY PERMITS AT THE JOB SITE FOR AGENCY INSPECTION.

5. CONTRACTOR SHALL LOCATE ALL UTILITIES AND PROTECT THEM FROM DAMAGE. THE CONTRACTOR SHALL REPAIR AND/OR REPLACE ANY UTILITIES DAMAGED BY THE CONTRACTOR AND PROVIDE FOR SERVICE CONTINUATION DURING REPAIRS AT HIS EXPENSE.

6. UTILITY CROSSINGS AND DEPTHS WITHIN THE PARCEL BOUNDARIES ARE APPROXIMATE. THE CONTRACTOR IS RESPONSIBLE FOR VERIFYING THE UTILITY LOCATIONS AND DEPTHS PRIOR TO CONSTRUCTION. EXISTING UTILITIES SHALL BE PROTECTED.

7. LOCATIONS OF UTILITIES OUTSIDE THE PARCEL BOUNDARY ARE APPROXIMATE. THE CONTRACTOR IS RESPONSIBLE TO VERIFY UTILITY LOCATIONS AND DEPTHS PRIOR TO CONSTRUCTION. EXISTING UTILITIES SHALL BE PROTECTED.

8. THE CONTRACTOR SHALL MAINTAIN AN ORDERLY AND CLEAN JOB SITE. THE CONTRACTOR SHALL REMOVE AND PROPERLY DISPOSE OF ALL CONSTRUCTION RELATED TRASH, DEBRIS, AND EXCESS MATERIALS. THE CONTRACTOR'S LAYDOWN AREA FOR MATERIALS SHALL BE COORDINATED WITH THE ENGINEER AND OTHER ON-SITE CONTRACTORS. SECURITY FOR CONTRACTOR'S EQUIPMENT AND MATERIALS IS THE RESPONSIBILITY OF THE CONTRACTOR.

9. STORMWATER POLLUTION PREVENTION: CONTRACTOR SHALL PREPARE, MAINTAIN COMPLIANCE WITH, AND IMPLEMENT A CONSTRUCTION STORMWATER POLLUTION PREVENTION PLAN (SWPPP) FOR THIS WORK IN ACCORDANCE WITH APPLICABLE LOCAL, STATE AND FEDERAL REGULATION. THIS SWPPP ALONG WITH OTHER DOCUMENTS SHALL BE WRITTEN, AMENDED, AND CERTIFIED BY A QUALIFIED SWPPP DEVELOPER (QSD) TO COMPLY WITH REQUIREMENTS OF AND OBTAIN COVERAGE UNDER THE 2009 CONSTRUCTION GENERAL PERMIT (ORDER No. 2009-0009 DWQ: NPDES No. CAS000002) ADOPTED BY THE STATE WATER RESOURCES CONTROL BOARD (SWRCB), OR THE LATEST VERSION OF THE PERMIT AT THE TIME OF CONSTRUCTION. CONTRACTOR SHALL FILE A NOTICE OF INTENT (NOI), SWPPP, APPROPRIATE PERMIT DOCUMENTS AND FEES WELL IN ADVANCE OF BEGINNING THE WORK AND FILE A NOTICE OF TERMINATION (NOT) AS SOON AS THE WORK IS FINISHED. BEST MANAGEMENT PRACTICES (BMPs) SHALL BE USED TO PREVENT STORM WATER POLLUTION.

10. CONTRACTOR SHALL BE RESPONSIBLE FOR FIELD LOCATING AND PROTECTING EXISTING WELLS. DAMAGE TO WELLS BY THE CONTRACTOR SHALL BE REPAIRED OR REPLACED AT THE CONTRACTOR'S EXPENSE.

11. NO HAZARDOUS MATERIALS SHALL BE STORED ONSITE DURING CONSTRUCTION OR OPERATION AND MAINTENANCE.

12. WHERE REFERENCE IS MADE TO STANDARD PLANS OR STANDARD SPECIFICATIONS, IT SHALL REFER TO THE STANDARD PLANS FOR PUBLIC WORKS CONSTRUCTION AND STANDARD SPECIFICATIONS FOR PUBLIC WORKS CONSTRUCTION, 2009 EDITION AND ASSOCIATED ADDENDUMS. ALL WORK AND MATERIALS ASSOCIATED WITH ROW CONSTRUCTION SHALL CONFORM TO THE MOST CURRENT EDITION OF THE CITY OF WHITTIER OR LOS ANGELES COUNTY STANDARD SPECS.

13. ADDRESS FOR OMEGA GWTS FACILITY IS:
12504/12512 EAST WHITTIER BOULEVARD
WHITTIER, CALIFORNIA 90602

14. ADDRESS OF TREATMENT PLANT LOCATIONS:
12504 / 12512 EAST WHITTIER BOULEVARD (PLANT 1)
12471 WASHINGTON BOULEVARD (PLANT 2)
WHITTIER, CALIFORNIA 90602

15. ENGINEER OF RECORD IS:
RAVI SUBRAMANIAN, PE
CDM SMITH
555 17th STREET, SUITE 1100
DENVER, CO, 80202

A. THE CONTRACTOR SHALL FURNISH ALL NECESSARY DETAIL SURVEYS INCLUDING ALL PIPELINES, CONDUITS, VAULTS, EQUIPMENT PADS, REMEDIATION AND ELECTRICAL EQUIPMENT, AND APPROPRIATE SURVEY POINTS IN THE COORDINATES AND DATUMS LISTED HEREIN. THE CONTRACTOR SHALL INDICATE ON RECORD DRAWINGS ALL DATA ON EXISTING UTILITIES THAT AFFECT THE RIGHT-OF-WAY. RECORD SURVEY INFORMATION SHALL BE SUBMITTED ON 1"=40' SCALE DRAWINGS USING AUTOCAD 2009 OR NEWER, INDICATING LOCATION OF SURVEY POINTS (I.E., NORTHING, EASTING AND ELEVATION). THE AUTOCAD FILES MUST ALSO BE PROVIDED ON DISK WITH SURVEY SUBMITTALS.

B. ALL SURVEY, LAYOUT AND RELATED WORK SHALL BE PERFORMED, STAMPED, AND SIGNED BY A LAND SURVEYOR REGISTERED IN THE STATE OF CALIFORNIA.

C. THE CONTRACTOR'S INSTRUMENTS AND OTHER SURVEY EQUIPMENT SHALL BE ACCURATE (±0.1 FEET), SUITABLE FOR THE SURVEYS REQUIRED IN ACCORDANCE WITH RECOGNIZED PROFESSIONAL STANDARDS, AND IN PROPER CONDITION AND ADJUSTMENT AT ALL TIMES.

D. THE CONTRACTOR SHALL PROMPTLY NOTIFY THE OWNER OR ENGINEER OF ANY DISCREPANCIES DISCOVERED. THE CONTRACTOR SHALL ALSO VERIFY LAYOUT PERIODICALLY DURING CONSTRUCTION.

E. OWNER WILL IDENTIFY EXISTING SITE REFERENCE POINTS, BENCHMARKS, AND PLACEMENTS AS SHOWN ON THE DESIGN DRAWINGS. ADDITIONAL BENCHMARKS THAT THE CONTRACTOR MAY REQUIRE FOR PERFORMANCE OF WORK AND FOR POST-CONSTRUCTION DOCUMENTATION SHALL BE ESTABLISHED BY THE CONTRACTOR AND TIED INTO EXISTING USGS DATA.

SURVEYING ACCURACY AND TOLERANCES IN SETTING OF SURVEY STAKES:

A. CONTROL TRAVERSE FIELD SURVEYS AND COMPUTATIONS SHALL BE PERFORMED TO AN ACCURACY OF AT LEAST 1:25000.

B. THE TOLERANCES GENERALLY APPLICABLE IN SETTING SURVEY STAKES SHALL BE AS SET FORTH BELOW (TABLE 1). SUCH TOLERANCES SHALL NOT SUPERSEDE STRICTER TOLERANCES REQUIRED BY THE DRAWINGS OR SPECIFICATIONS, AND SHALL NOT OTHERWISE RELIEVE THE CONTRACTOR OF RESPONSIBILITY FOR MEASUREMENTS IN COMPLIANCE THEREWITH.

TABLE 1

| TYPE OF LINE OR MARK | POSITION | HORIZONTAL ELEVATION |
|---|---|---|
| PERMANEMENT REFERENCE POINTS | 1 IN 10,000± | +/- 0.01 FEET |
| GENERAL EXCAVATION AND EARTHWORK | 1 IN 2,000± | +/- 0.10 FEET |

SURVEYS FOR LAYOUT AND PERFORMANCE OF WORK:

A. THE CONTRACTOR SHALL PERFORM ALL SURVEYS FOR LAYOUT AND PERFORMANCE OF THE PROJECT, REDUCE THE FIELD NOTES, MAKE NECESSARY CALCULATIONS AND PREPARE DRAWINGS NECESSARY TO CARRY OUT SUCH WORK. SUCH WORK SHALL INCLUDE, BUT NOT BE LIMITED TO:

1. STAKED PIPELINE TRENCH ALIGNMENT.
2. JOINTS OF ABOVE- AND BELOW-GRADE PIPELINES.
3. PIPELINE ALIGNMENT EVERY 40 FEET, OR MORE FREQUENTLY AS REQUIRED IN PUBLIC RIGHT-OF-WAYS.
4. PIPELINE GRADE CHANGES

SURVEYS FOR RECORD DRAWINGS:

A. CONTRACTOR SHALL ASSEMBLE CONSTRUCTION DATA AND/OR PERFORM A PIPELINE SURVEY AT THE COMPLETION OF THE PROJECT. THESE SURVEYS SHALL INCLUDE THE FOLLOWING:

1. LOCATION OF SURVEY POINTS (I.E. NORTHING, EASTING AND ELEVATION).
2. AS-BUILT ELEVATION OF THE PIPELINE AND CONDUITS AT INTERVALS OF NOT LESS THAN 10 FEET AND AT ALL SIGNIFICANT GRADE OR DIRECTION CHANGES, AT PIPE CONNECTIONS, TEES, WYES, VALVES, CLEANOUTS, CONDENSATE SUMPS, CHANGES IN PIPELINE ALIGNMENTS FROM APPROVED/PERMITTED CONSTRUCTION DRAWINGS, THE ELEVATIONS OF ALL UTILITY LINES CROSSING AND THE ELEVATION OF THE PIPELINE AT THE CROSSING POINT(S).
3. AS-BUILT ELEVATION OF ALL WELL CASINGS
4. ELEVATIONS OF ALL UTILITY LINE CROSSINGS AND THE ELEVATION OF THE PIPELINE AT THE CROSSING POINTS.
5. LOCATION OF BENCHMARKS.
6. LOCATION OF UTILITY POLES AND ELECTRICAL TRANSFORMERS.
7. LOCATION OF TREATMENT COMPOUND AREA AND ALL EQUIPMENT, PANELS, BUILDING STRUCTURES.

B. AFTER FINAL APPROVAL BY ENGINEER/OWNER, THE CONTRACTOR SHALL SUBMIT THREE SETS OF FINAL RECORD DRAWINGS FOR EACH SURVEY, WHICH SHALL BE STAMPED BY A CALIFORNIA PROFESSIONAL LAND SURVEYOR AND ONE COPY OF THE SURVEY IN ELECTRONIC FORMAT, AUTOCAD 2009 OR NEWER.

# SURVEY AND LAYOUT DATA AND RECORD DRAWINGS:

AS-BUILT (RECORD) DRAWINGS:

A. THE CONTRACTOR SHALL MARK UP ONE SET OF DRAWING PRINTS TO SHOW THE AS-BUILT CONDITIONS. THE AS-BUILT MARKED PRINTS SHALL BE NEAT, ACCURATE, AND LEGIBLE AND SHALL BE KEPT CURRENT AND AVAILABLE ON THE JOBSITE AT ALL TIMES. ALL CHANGES FROM THE CONTRACT PLANS WHICH ARE MADE IN THE WORK, OR ADDITIONAL INFORMATION WHICH MIGHT BE UNCOVERED IN THE COURSE OF CONSTRUCTION SHALL BE ACCURATELY AND NEATLY RECORDED AS THEY OCCUR BY MEANS OF DETAILS AND NOTES. THE DRAWINGS SHALL SHOW THE FOLLOWING INFORMATION, BUT NOT BE LIMITED TO:

1. THE LOCATION AND DESCRIPTION OF ANY UTILITY LINES, BELOW-GRADE PERMANENT STRUCTURES OR OTHER INSTALLATIONS OF ANY KIND OR DESCRIPTION EXISTING WITHIN THE CONSTRUCTION AREA. THE LOCATION INCLUDES SURVEY COORDINATES AND DIMENSIONS TO PERMANENT FEATURES.
2. THE LOCATION, ELEVATIONS, AND DIMENSIONS OF ANY CHANGES WITHIN THE SCOPE OF WORK.
3. CHANGES IN DETAILS OF DESIGN OR ADDITIONAL INFORMATION OBTAINED FROM WORKING DRAWINGS SPECIFIED TO BE PREPARED AND/OR FURNISHED BY THE CONTRACTOR INCLUDING BUT NOT LIMITED TO FABRICATION, ERECTION, INSTALLATION PLANS AND PLACING DETAILS, PIPE SIZES, INSULATION MATERIAL, DIMENSIONS OF EQUIPMENT FOUNDATIONS, AND ANY OTHER APPLICABLE ITEM.
4. THE TOPOGRAPHY AND GRADES OF ALL DRAINAGE INSTALLED OR AFFECTED AS A PART OF THE PROJECT CONSTRUCTION.
5. ALL CHANGES OR MODIFICATIONS WHICH RESULT FROM THE FINAL INSPECTION.

B. UPON REVIEW AND APPROVAL, ONE COPY OF THE AS-BUILT MARKED PRINTS WILL BE RETURNED TO THE CONTRACTOR FOR USE IN PREPARATION OF FINAL AS-BUILT DRAWINGS.

# DATUM STATEMENT:

BASIS OF BEARINGS
THE BEARINGS SHOWN HEREON ARE BASED ON THE CENTERLINE OF WASHINGTON BLVD. BETWEEN THE FOUND 2-1/2" BRASS DISK STAMPED RE 63 IN WELL, AT THE LAMBERT ROAD INTERSECTION AND THE FOUND SPIKE AND WASHER, LS 5411, AT THE PUTNAM STREET INTERSECTION BEING N78°31'02"E.

COORDINATE DATUM
COORDINATES SHOWN HEREON ARE BASED ON THE CALIFORNIA COORDINATE SYSTEM (CCS83), ZONE 5, 1983 NAD, 2004.0 EPOCH.

BENCHMARK
LOS ANGELES COUNTY BM Y6633
ELEV. 215.036 NAVD88 1995 ADJUSTMENT
BASELINE QUAD
COUNTY ENGINEERS MONUMENT AT THE NORTH END OF A CATCH BASIN 19.7 FEET NORTH OF THE BEGIN CURB RETURN ON WHITTIER BLVD. 59.0 FEET EAST OF THE CENTERLINE OF WHITTIER BLVD. AND 88.6 FEET WEST OF THE CENTERLINE OF PICKERING AVE. MARKED "BM 1-14AB 1961 RE 5869"

**PRELIMINARY DESIGN**
**NOT FOR CONSTRUCTION**

CALL BEFORE YOU DIG:
UNDERGROUND SERVICE ALERT OF
SOUTHERN CALIFORNIA
TWO WORKING DAYS BEFORE YOU DIG
1-800-227-2600

REGISTERED PROFESSIONAL ENGINEER
RAVI SUBRAMANIAN
No. C053679
Exp. 06-30-2015
CIVIL
STATE OF CALIFORNIA

| REV. NO. | DATE | DRWN | CHKD | REMARKS |
|---|---|---|---|---|
| 3 | 7/12/13 | PJR | IL | REVISED FOR PDR SUBMITTAL |
| 2 | 5/17/13 | PJR | DDN | REVISED FOR PDR SUBMITTAL |
| 1 | 10/24/12 | PJR | JTB | PDR SUBMITTAL |

DESIGNED BY: NLS
DRAWN BY: PJR
SHEET CHK'D BY: NLS
CROSS CHK'D BY: JTB
APPROVED BY: RS
DATE: JULY 2013

CDM Smith
111 Academy Way, Suite 150
Irvine, California, 92617
Tel: (949) 752-5452

OMEGA CHEMICAL SUPERFUND SITE
12504 / 12512 EAST WHITTIER BOULEVARD
12471 WASHINGTON BOULEVARD
WHITTIER, CALIFORNIA

GENERAL CIVIL NOTES

PROJECT NO. 10500-97768
FILE NAME: C-2
SHEET NO.
C-2

C:\cdmxm\riehlepj\d1257128\C-2 07/11/13 07:38 riehlepj XREFS: CDMS_2234-FULL SVE, PRELIM NOT FOR CONST, CA-Ravi-S-2013
©2012 CDM SMITH ALL RIGHTS RESERVED.
REUSE OF DOCUMENTS: THESE DOCUMENTS AND DESIGNS PROVIDED BY PROFESSIONAL SERVICE, INCORPORATED HEREIN, ARE THE PROPERTY OF CDM SMITH AND ARE NOT TO BE USED, IN WHOLE OR PART, FOR ANY OTHER PROJECT WITHOUT THE WRITTEN AUTHORIZATION OF CDM SMITH.

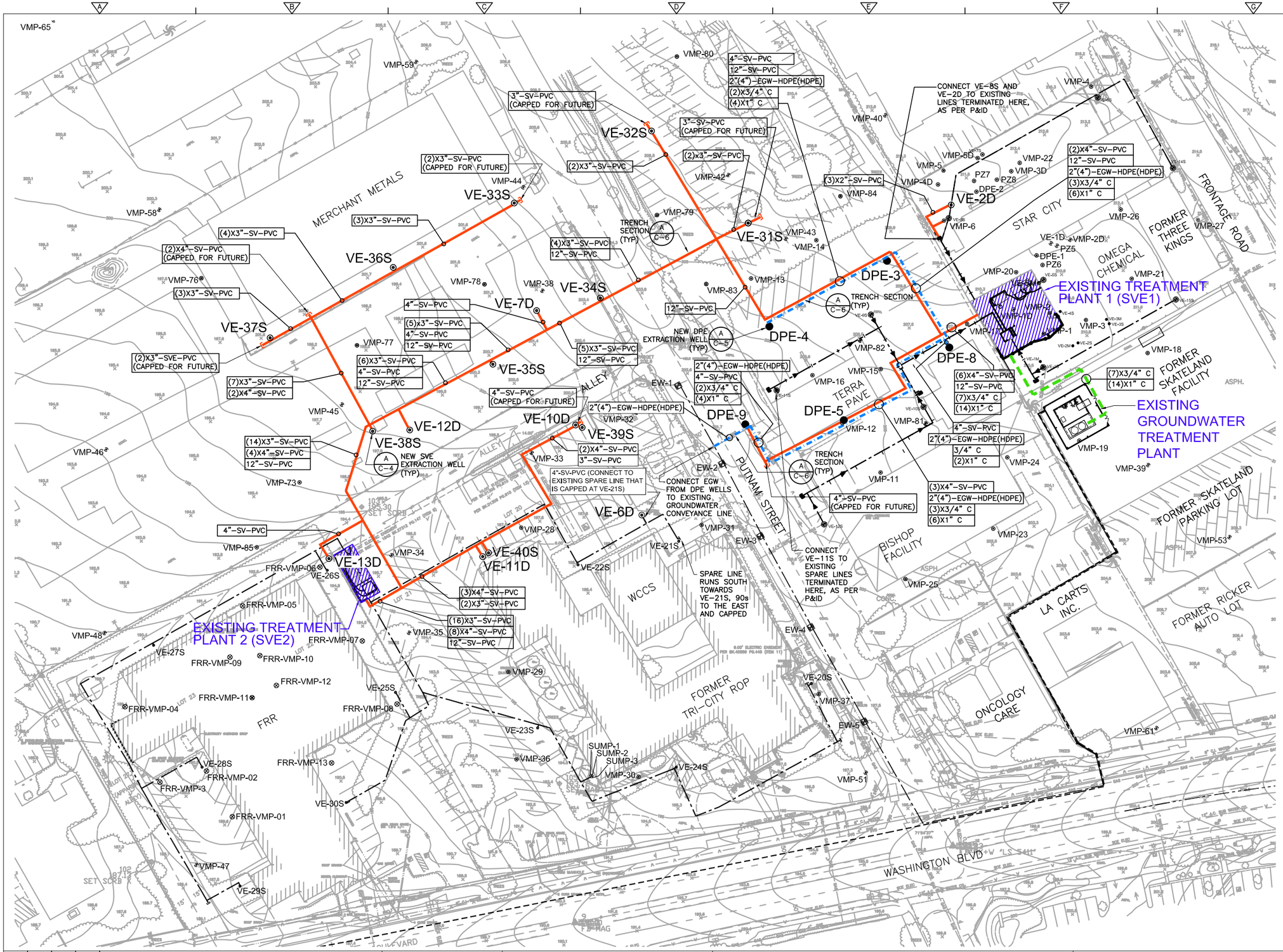


## NOTE:

1. CONVEYANCE TO VE-5S FROM PLANT 1 IS NOT SHOWN FOR CLARITY.
2. CONDUIT QUANTITIES INCLUDE TWO SPARE SETS (ONE 3/4"C AND TWO 1" C IN EACH SET) WHICH SHALL TERMINATE AT DPE-4 AND DPE-9 FOR FUTURE USE IF NEEDED.
3. ADDITIONAL PIPING DETAILS ARE SHOWN ON THE P&ID.

## LEGEND:

- EXISTING GROUNDWATER CONVEYANCE LINE
- EXISTING SOIL VAPOR CONVEYANCE LINE
- NEW EXTRACTED GROUNDWATER CONVEYANCE LINE
- NEW EXTRACTED SOIL VAPOR CONVEYANCE LINE
- NEW ELECTRICAL CONDUIT

CALL BEFORE YOU DIG:
UNDERGROUND SERVICE ALERT OF SOUTHERN CALIFORNIA
TWO WORKING DAYS BEFORE YOU DIG
1-800-227-2600

**PRELIMINARY DESIGN NOT FOR CONSTRUCTION**

1" = 40'
20 0 40
N

REGISTERED PROFESSIONAL ENGINEER RAVI SUBRAMANIAN No. C053679 Exp. 06-30-2015 CIVIL STATE OF CALIFORNIA

| REV. NO. | DATE | DRWN | CHKD | REMARKS |
|---|---|---|---|---|
| 3 | 7/31/13 | PJR | IL | REVISED FOR PDR SUBMITTAL |
| 2 | 5/17/13 | PJR | DDN | REVISED FOR PDR SUBMITTAL |
| 1 | 10/24/12 | PJR | | PDR SUBMITTAL |

DESIGNED BY: NLS
DRAWN BY: PJR
SHEET CHK'D BY: NLS
CROSS CHK'D BY: JTB
APPROVED BY: RS
DATE: JULY 2013

CDM Smith
111 Academy Way, Suite 150
Irvine, California, 92617
Tel: (949) 752-5452

OMEGA CHEMICAL SUPERFUND SITE
12504 / 12512 EAST WHITTIER BOULEVARD
12471 WASHINGTON BOULEVARD
WHITTIER, CALIFORNIA

SITE PLAN

PROJECT NO. 10500-97768
FILE NAME: C-3
SHEET NO.
C-3

C:\cdmxm\riehlepj\d1257128\ C-3 07/23/13 11:23 riehlepj XREFS: 11CDM02-Topo, 00001PL, CWPL0001, cutl000, PRELIM NOT FOR CONST, M-2, CDMS_2234-FULL SVE, CA-Ravi-S-2015, SVE-00001PL-NEW, CWPL-SL1, CWPL-SVE-1 SYSTEM
©2012 CDM SMITH ALL RIGHTS RESERVED.
REUSE OF DOCUMENTS: THESE DOCUMENTS AND DESIGNS PROVIDED BY PROFESSIONAL SERVICE, INCORPORATED HEREIN, ARE THE PROPERTY OF CDM SMITH AND ARE NOT TO BE USED, IN WHOLE OR PART, FOR ANY OTHER PROJECT WITHOUT THE WRITTEN AUTHORIZATION OF CDM SMITH.

## NOTES:

1. PIPING SHALL BE INSTALLED TO SLOPE DOWN TOWARD THE SVE WELL AT APPROXIMATELY 0.5% WHERE FEASIBLE. CONTRACTOR SHALL INSTALL LOW POINT MOISTURE REMOVAL SUMPS AS NEEDED.
2. WELLS WILL BE INSTALLED AND DRILLED BY OTHERS. CONTRACTOR SHALL DEMO ANY EXISTING WELL BOX AND SURFACE COMPLETION INSTALLED BY OTHERS AND MODIFY TO MATCH AS SHOWN ON DETAIL A.

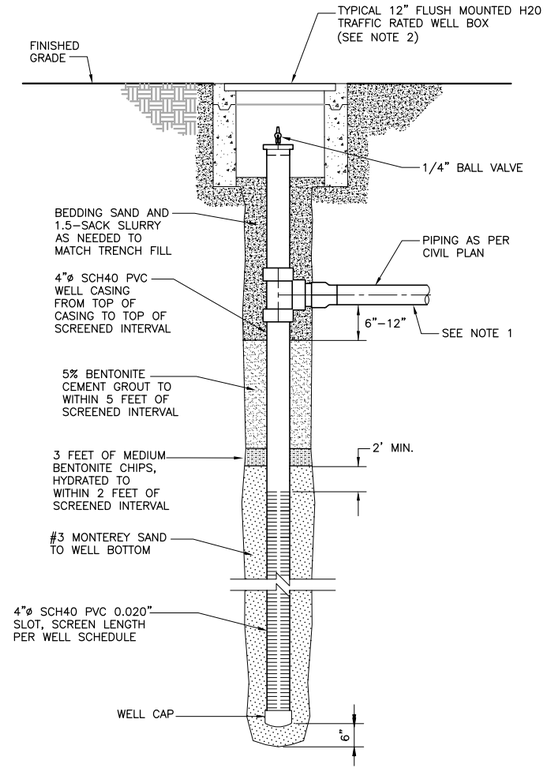


TYPICAL NEW VAPOR EXTRACTION WELL (VEW)

DETAIL A C-3
NTS

## EXTRACTION WELL SCHEDULE

| Extraction Well ID | Status | Diameter (In.) | Total Depth (Feet Bgs) | Screened Interval (Feet Bgs) | | Coordinates | |
|---|---|---|---|---|---|---|---|
| | | | | Top | Bottom | Northing | Easting |
| SVE1 Wells (EXISTING) | | | | | | | |
| VE-1S | Existing | 4 | 23.0 | 12.5 | 22.5 | 1811157.14 | 6548381.19 |
| VE-5S | Existing | 4 | 23.0 | 12.0 | 22.0 | 1811229.21 | 6548380.51 |
| VE-6S | Existing | 4 | 30.0 | 10.0 | 30.0 | 1811381.18 | 6548426.45 |
| VE-8S | Existing | 4 | 30.0 | 10.0 | 30.0 | 1811271.82 | 6548300.72 |
| VE-9S | Existing | 4 | 30.0 | 10.0 | 30.0 | 1811200.74 | 6548238.16 |
| VE-10S | Existing | 4 | 30.0 | 10.0 | 30.0 | 1811123.89 | 6548282.04 |
| VE-11S | Existing | 4 | 30.0 | 10.0 | 30.0 | 1811137.65 | 6548159.80 |
| VE-12S | Existing | 4 | 30.0 | 10.0 | 30.0 | 1811026.18 | 6548199.24 |
| VE-14S | Existing | 4 | 30.0 | 10.0 | 30.0 | 1811329.61 | 6548486.51 |
| VE-15S | Existing | 4 | 30.0 | 10.0 | 30.0 | 1811213.08 | 6548491.98 |
| SVE2 Wells (EXISTING) | | | | | | | |
| VE-20S | Existing | 4 | 30.0 | 10.0 | 30.0 | 1810898.21 | 6548176.58 |
| VE-21S | Existing | 4 | 30.0 | 10.0 | 30.0 | 1811015.60 | 6548083.49 |
| VE-22S | Existing | 4 | 30.0 | 10.0 | 30.0 | 1810999.44 | 6547993.38 |
| VE-23S | Existing | 4 | 30.0 | 10.0 | 30.0 | 1810843.36 | 6547968.19 |
| VE-24S | Existing | 4 | 30.0 | 10.0 | 30.0 | 1810827.21 | 6548076.52 |
| VE-25S | Existing | 4 | 30.0 | 10.0 | 30.0 | 1810897.67 | 6547837.08 |
| VE-26S | Existing | 4 | 30.0 | 10.0 | 30.0 | 1810991.40 | 6547783.32 |
| VE-27S | Existing | 4 | 30.0 | 10.0 | 30.0 | 1810927.08 | 6547640.10 |
| VE-28S | Existing | 4 | 30.0 | 10.0 | 30.0 | 1810822.71 | 6547684.19 |
| VE-29S | Existing | 4 | 30.0 | 10.0 | 30.0 | 1810726.10 | 6547716.46 |
| VE-30S | Existing | 4 | 30.0 | 10.0 | 30.0 | 1810799.60 | 6547800.53 |
| Additional Full-Scale SVE Wells (NEW) | | | | | | | |
| VE-31S | New | 4 | 30.5 | 10.0 | 30.0 | TBD | TBD |
| VE-32S | New | 4 | 30.5 | 10.0 | 30.0 | TBD | TBD |
| VE-33S | New | 4 | 30.5 | 10.0 | 30.0 | TBD | TBD |
| VE-34S | New | 4 | 30.5 | 10.0 | 30.0 | TBD | TBD |
| VE-35S | New | 4 | 30.5 | 10.0 | 30.0 | TBD | TBD |
| VE-36S | New | 4 | 30.5 | 10.0 | 30.0 | TBD | TBD |
| VE-37S | New | 4 | 30.5 | 10.0 | 30.0 | TBD | TBD |
| VE-38S | New | 4 | 30.5 | 10.0 | 30.0 | TBD | TBD |
| VE-39S | New | 4 | 30.5 | 10.0 | 30.0 | TBD | TBD |
| VE-40S | New | 4 | 30.5 | 10.0 | 30.0 | TBD | TBD |
| VE-2D | Existing | 4 | 70.5 | 35.0 | 70.0 | 1811263.48 | 6548403.58 |
| VE-6D * | New | 4 | 95 | 40.0 | 95 | TBD | TBD |
| VE-7D * | New | 4 | 95 | 40.0 | 95 | TBD | TBD |
| VE-10D* | New | 4 | 95 | 40.0 | 95 | TBD | TBD |
| VE-11D* | New | 4 | 95 | 40.0 | 95 | TBD | TBD |
| VE-12D* | New | 4 | 95 | 40.0 | 95 | TBD | TBD |
| VE-13D* | New | 4 | 95 | 40.0 | 95 | TBD | TBD |

FT-BGS= FEET BELOW GROUND SURFACE

TBD= FINAL COORDINATES AND ELEVATIONS OF WELLS TO BE DETERMINED IN THE FIELD.

FINAL WELL LOCATION AND SCREENED INTERVAL WILL BE DETERMINED ONSITE BY SITE GEOLOGIST CONSISTENT WITH THE OBJECTIVE SPECIFIED IN THE PDR AND TO AVOID CONFLICTS WITH EXISTING UTILITIES.

* ALL NEW DEEP VAPOR EXTRACTION WELLS (VEWS) WILL BE INSTALLED BY OTHERS, AND CONSTRUCTED EQUIVALENTLY TO THE DPE WELLS SHOWN ON DETAIL A, C-5, BUT WILL BE COMPLETED WITH VAPOR EXTRACTION PIPING AND NO VAULT, AS SHOWN ON THIS SHEET.

**PRELIMINARY DESIGN**
**NOT FOR CONSTRUCTION**

CALL BEFORE YOU DIG:
UNDERGROUND SERVICE ALERT OF
SOUTHERN CALIFORNIA
TWO WORKING DAYS BEFORE YOU DIG
1-800-227-2600

REGISTERED PROFESSIONAL ENGINEER
RAVI SUBRAMANIAN
No. C053679
Exp. 06-30-2015
CIVIL
STATE OF CALIFORNIA

| REV. NO. | DATE | DRWN | CHKD | REMARKS |
|---|---|---|---|---|
| 3 | 7-31-13 | PJR | IL | REVISED FOR PDR SUBMITTAL |
| 2 | 5/17/13 | PJR | DDN | REVISED FOR PDR SUBMITTAL |
| 1 | 10/24/12 | PJR | JTB | PDR SUBMITTAL |

DESIGNED BY: NLS
DRAWN BY: PJR
SHEET CHK'D BY: NLS
CROSS CHK'D BY: JTB
APPROVED BY: RS
DATE: JULY 2013

CDM Smith
111 Academy Way, Suite 150
Irvine, California, 92617
Tel: (949) 752-5452

OMEGA CHEMICAL SUPERFUND SITE
12504 / 12512 EAST WHITTIER BOULEVARD
12471 WASHINGTON BOULEVARD
WHITTIER, CALIFORNIA

SOIL VAPOR EXTRACTION WELLS AND SCHEDULE

PROJECT NO. 10500-97768
FILE NAME: C-4
SHEET NO.
C-4

C:\cdmxm\riehlepj\d1257128\ C-4 07/23/13 11:26 riehlepj XREFS: PRELIM NOT FOR CONST, CDMS_2234-FULL SVE, CA-Ravi-S-2015
©2012 CDM SMITH ALL RIGHTS RESERVED.
REUSE OF DOCUMENTS: THESE DOCUMENTS AND DESIGNS PROVIDED BY PROFESSIONAL SERVICE, INCORPORATED HEREIN, ARE THE PROPERTY OF CDM SMITH AND ARE NOT TO BE USED, IN WHOLE OR PART, FOR ANY OTHER PROJECT WITHOUT THE WRITTEN AUTHORIZATION OF CDM SMITH.

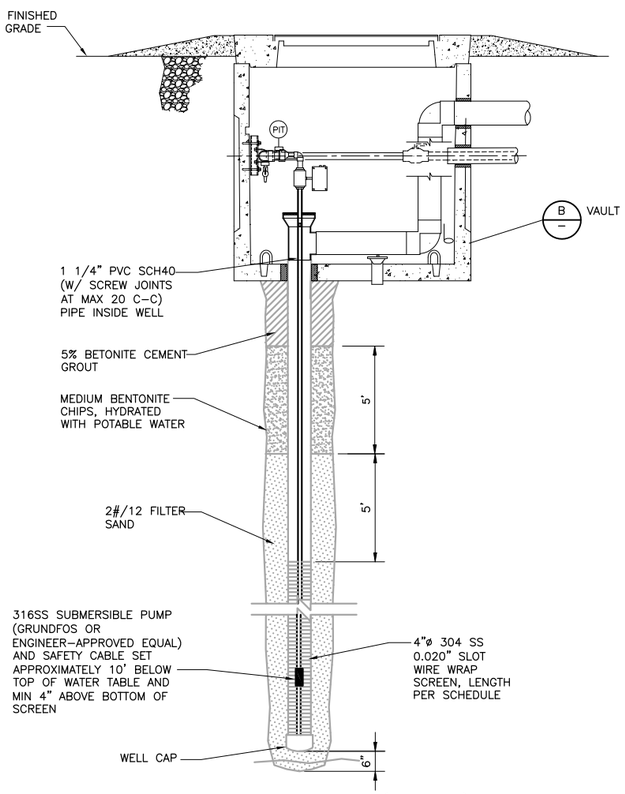


DUAL PHASE EXTRACTION WELL (TYP. OF 5)

DETAIL A
NTS

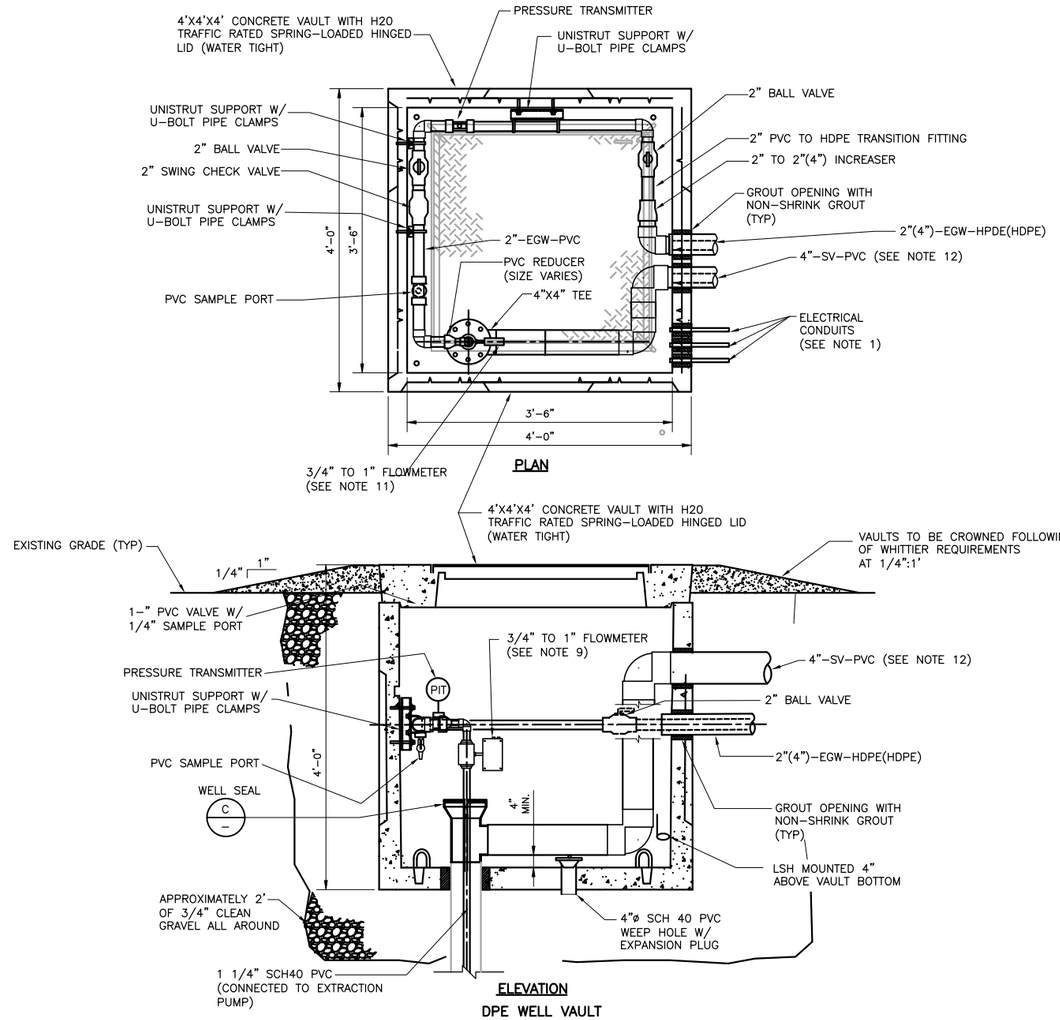


PLAN

ELEVATION

DPE WELL VAULT
(TYP. OF WELLS DPE–3, DPE–4, DPE–5, DEP–8 AND DPE–9)

DETAIL B
NTS

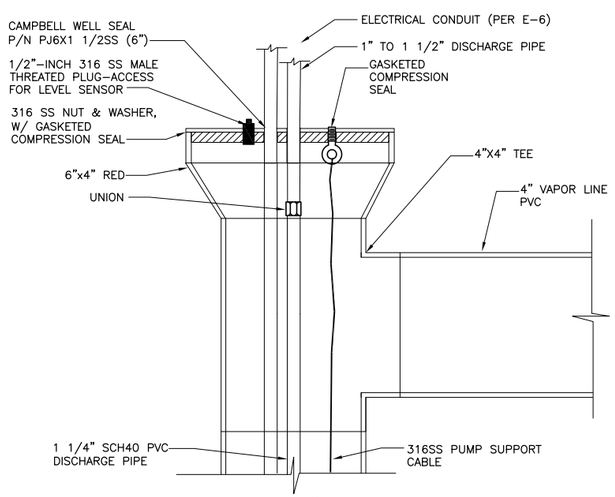


WELL SEAL

DETAIL C
NTS

NOTES:

1. ELECTRICAL INFORMATION INCLUDING NO. AND SIZE OF CONDUITS AND CONDUCTORS PROVIDED ON ELECTRICAL DRAWINGS AND C–3.
2. ACTUAL ORIENTATION OF SAMPLE PORTS AND GAUGES MAY DIFFER FROM WHAT IS SHOWN TO ALLOW EASY ACCESS FOR OBSERVATION AND MAINTENANCE.
3. PIPE THREAD COMPOUND SHALL BE USED ON ALL RISER CONNECTIONS, PER MANUFACTURER'S RECOMMENDATIONS.
4. DROP CABLE SHALL BE CAPABLE OF SUPPORTING PIPE, PUMP, AND WATER WEIGHT (APPROXIMATELY 300 LBS PER EACH WELL) AND SHALL NOT CORRODE IN WELL WATER.
5. ALL PUMPS, PIPES, HOSES, FLOWMETERS, VALVES, INSTRUMENTS AND OTHER FITTINGS SHALL BE INSTALLED PER MANUFACTURERS RECOMMENDATIONS.
6. PLEASE REFER TO THE P&IDs AND ELECTRICAL SHEETS FOR MORE DETAILS.
7. TOTAL FLOW FROM ALL NEW WELLS NOT TO EXCEED 12.5 GPM.
8. WELLS WILL BE INSTALLED AND DRILLED BY OTHERS. CONTRACTOR SHALL DEMO ANY EXISTING WELL BOX AND SURFACE COMPLETION INSTALLED BY OTHERS AND MODIFY TO MATCH AS SHOWN ON DETAIL.
9. MAINTAIN FLOWMETER LOCATION AT 10–PIPE DIAMETERS UPSTREAM AND 5–PIPE DIAMETERS DOWNSTREAM OF VALVES AND FITTINGS ON PIPING.
10. ALL VALVES TO BE TRUE UNION, UNO.
11. ALL FLOWMETERS TO BE INSTALLED SO THAT THEY CAN BE EASILY REMOVED FOR MAINTENANCE.
12. VAPOR PIPING SHALL BE INSTALLED TO SLOPE DOWN TOWARD THE DPE WELL AT APPROXIMATELY 0.5% IF FEASIBLE. CONTRACTOR SHALL INSTALL LOW POINT MOISTURE REMOVAL SUMPS AS NEEDED.

PROPOSED DUAL PHASE EXTRACTION WELL SCHEDULE

| EXTRACTION WELL ID | STATUS | DIAMETER (IN.) | TOTAL DEPTH (FEET BGS) | SCREENED INTERNAL (FT–BGS) | | COORDINATES | |
|---|---|---|---|---|---|---|---|
| | | | | TOP | BOTTOM | NORTHING | EASTING |
| DPE–3 | NEW | 4 | 95 | 35 | 95 | TBD | TBD |
| DPE–4 | NEW | 4 | 95 | 35 | 95 | TBD | TBD |
| DPE–5 | NEW | 4 | 95 | 35 | 95 | TBD | TBD |
| DPE–8 | NEW | 4 | 95 | 35 | 95 | TBD | TBD |
| DPE–9 | NEW | 4 | 95 | 35 | 95 | TBD | TBD |

FT–BGS= FEET BELOW GROUND SURFACE

TBD– FINAL COORDINATES AND ELEVATIONS OF VAULTS TO BE DETERMINED IN THE FIELD.

FINAL TOTAL DEPTH AND SCREENED INTERVAL WILL BE DETERMINED ON SITE BY SITE GEOLOGIST ACCOUNTING FOR WATER LEVEL, PUMP SIZE, AND 10 FEET MIN. SUBMERGENCE OF PUMP INTAKE.

**PRELIMINARY DESIGN**
**NOT FOR CONSTRUCTION**

CALL BEFORE YOU DIG:
UNDERGROUND SERVICE ALERT OF
SOUTHERN CALIFORNIA
TWO WORKING DAYS BEFORE YOU DIG
1–800–227–2600

REGISTERED PROFESSIONAL ENGINEER
RAVI SUBRAMANIAN
No. C053679
Exp. 06–30–2015
CIVIL
STATE OF CALIFORNIA

| REV. NO. | DATE | DRWN | CHKD | REMARKS |
|---|---|---|---|---|
| 1 | 7–31–13 | PJR | IL | REVISED PER PDR SUBMITTAL |

DESIGNED BY: IL
DRAWN BY: PJR
SHEET CHK'D BY: IL
CROSS CHK'D BY: JTB
APPROVED BY: RS
DATE: JULY 2013

CDM Smith
111 Academy Way, Suite 150
Irvine, California, 92617
Tel: (949) 752-5452

OMEGA CHEMICAL SUPERFUND SITE
12504 / 12512 EAST WHITTIER BOULEVARD
12471 WASHINGTON BOULEVARD
WHITTIER, CALIFORNIA

DUAL PHASE EXTRACTION WELLHEAD CONSTRUCTION DETAILS AND SCHEDULE

PROJECT NO. 10500–97768
FILE NAME: C–5
SHEET NO.
C–5

© 2013 CDM SMITH (CDM) ALL RIGHTS RESERVED
REUSE OF DOCUMENTS: THESE DOCUMENTS AND DESIGNS PROVIDED BY PROFESSIONAL SERVICE, INCORPORATED HEREIN, ARE THE PROPERTY OF CDM SMITH AND ARE NOT TO BE USED, IN WHOLE OR PART, FOR ANY OTHER PROJECT WITHOUT THE WRITTEN AUTHORIZATION OF CDM SMITH.

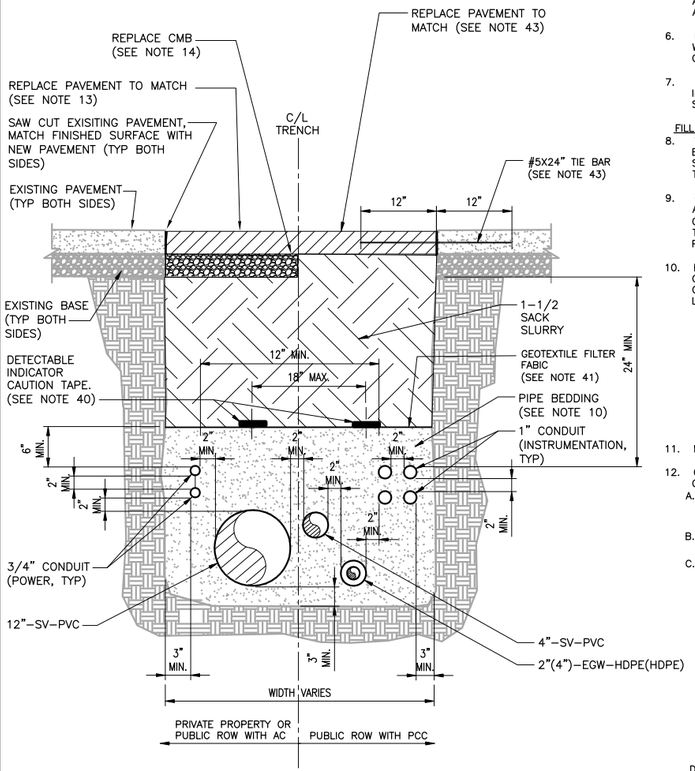


SECTION (TYP) A C-3

NTS

EXCAVATION NOTES

1. ALL ASPHALT AND CONCRETE PAVEMENT SHALL BE SAWCUT TO THE FULL DEPTH PRIOR TO REMOVAL.

2. EXCAVATE THE TRENCH TO THE LINES AND GRADES SHOWN ON THE DRAWINGS WITH ALLOWANCE FOR PIPE THICKNESS, FOR PIPE BASE, FOR FOUNDATION STABILIZATION OR SPECIAL BEDDING, WHERE APPLICABLE. IF THE TRENCH IS INADVERTENTLY EXCAVATED BELOW THE REQUIRED GRADE, REFILL ANY PART OF THE TRENCH EXCAVATED BELOW THE GRADE AT NO ADDITIONAL COST TO THE OWNER WITH CEMENT SLURRY AS SPECIFIED HEREIN. PLACE THE REFILLING MATERIAL OVER THE FULL WIDTH OF THE TRENCH IN COMPACTED LAYERS NOT EXCEEDING 6 INCHES DEEP TO THE ESTABLISHED GRADE WITH ALLOWANCE FOR THE PIPE BASE OR SPECIAL BEDDING. MATERIAL CONTAINING ROCKS OR COBBLES LARGER THAN 2 INCHES IN MAXIMUM DIMENSION SHALL NOT BE PERMITTED WITHIN 6 INCHES OF THE PIPE.

3. THE CONTRACTOR SHALL HAVE THE TRENCH INSPECTED BY THE OWNER OR THE ENGINEER. IN ADDITION, TRENCHES IN PUBLIC ROW SHALL BE INSPECTED AND APPROVED AS REQUIRED BY THE PERMITTING AGENCY.

4. SUBGRADE SURFACE SHALL BE RELATIVELY FREE OF DEBRIS, FOREIGN OBJECTS, LOOSE ORGANICS, AND OTHER DELETERIOUS MATERIALS AND SHALL BE SCARIFIED TO A DEPTH OF 12 INCHES; MOISTURE CONDITIONED, AND COMPACTED TO A MINIMUM OF 90 PERCENT OF MAXIMUM DRY DENSITY, IN ACCORDANCE WITH THE REQUIREMENTS OF ASTM D1557 (PROCTOR DENSITY TESTS), UNLESS NOTED OTHERWISE. MORE STRINGENT COMPACTION REQUIREMENTS (95 PERCENT OF MAXIMUM DENSITY) MAY BE REQUIRED BY THE PERMITTING AGENCIES.

5. IN AREAS OF SUBGRADE PREPARATION WHERE SOFT SOILS ARE ENCOUNTERED, REMOVE AND REPLACE THE SOIL TO A MINIMUM DEPTH OF 1 FOOT BELOW THE PROPOSED SUBGRADE ELEVATION. FILL THE AREA WITH NATIVE OR IMPORT FILL AND COMPACT TO AT LEAST 95 PERCENT MAXIMUM DRY DENSITY AT A MOISTURE CONTENT THAT LIES WITHIN 3 PERCENT OF THE OPTIMUM MOISTURE CONTENT.

6. DO NOT COMPACT FILL MATERIAL AT TEMPERATURES BELOW 32°F, UNLESS OTHERWISE AUTHORIZED IN WRITING BY THE OWNER. DO NOT PLACE FILL DURING PERIODS OF PRECIPITATION. PLACEMENT MAY OCCUR DURING PERIODS OF MISTING OR DRIZZLE, IF AUTHORIZED BY THE OWNER.

7. EXCAVATED MATERIAL FROM TRENCHES LOCATED WITHIN PAVED AREAS SHALL BE IMMEDIATELY LOADED INTO TRUCKS, HAULED OFF AND DISPOSED OFF SITE. NO EXCAVATED MATERIAL SHALL BE PLACED OR STORED WITHIN PUBLIC ROW.

FILL MATERIALS

8. WHERE APPLICABLE, SOIL REMOVED FROM SITE EXCAVATION AND TRENCHING MAY BE USED FOR BACKFILLING PROVIDED IT IS APPROVED BY THE ENGINEER. WHERE USED, ANY IMPORT FILL TO BE USED SHALL NOT CONTAIN ROCKS OR LUMPS LARGER THAN 5 INCHES IN GREATEST DIMENSION, WITH NO MORE THAN 15 PERCENT BY WEIGHT LARGER THAN 3 INCHES.

9. CONTRACTOR SHALL PROVIDE EQUIPMENT AND MANPOWER FOR COLLECTING REPRESENTATIVE SAMPLES OF ALL IMPORT FILL MATERIALS. FILL MATERIALS SHALL BE SAMPLED AND TESTED FOR VOLATILE ORGANIC COMPOUNDS (VOCS), TOTAL PETROLEUM HYDROCARBONS (TPH) AND OTHER COMPOUNDS AS DIRECTED BY THE OWNER AT A MINIMUM FREQUENCY OF ONCE EVERY 10,000 CUBIC YARDS AND A MINIMUM OF ONCE PER BORROW SITE TO VERIFY THAT THE FILL IS CLEAN AND CONTAMINATION FREE.

10. BEDDING MATERIAL USED FOR BEDDING AND BACKFILLING PIPE AND UTILITIES SHALL BE NATURAL RIVER OR BANK SAND; WASHED; FREE OF SILT, CLAY, LOAM, FRIABLE OR SOLUBLE MATERIALS, ORGANIC MATTER; GRADED IN ACCORDANCE WITH ASTM D2487 GROUP SYMBOL SP; AND WITHIN THE FOLLOWING GRADATION LIMITS:

| SIEVE SIZE | PERCENT (BY WEIGHT) PASSING SIEVE |
|---|---|
| 2 INCHES | 100 |
| NO. 4 | 70 - 100 |
| NO. 16 | 35 - 75 |
| NO. 50 | 10 - 40 |
| NO. 200 | 0 - 10 |

11. MINIMUM SAND EQUIVALENT SHALL BE 30 PER ASTM D-2419.

12. CONCRETE (CEMENT) SLURRY BACKFILL, WHERE USED, SHALL CONSIST OF A FLUID, WORKABLE MIXTURE OF AGGREGATE, CEMENT AND WATER.
   A. CEMENT SHALL BE PORTLAND CEMENT WHICH SHALL BE EITHER TYPE IP (MS) MODIFIED" CEMENT, "TYPE II MODIFIED" PORTLAND CEMENT OR TYPE V PORTLAND CEMENT CONFORMING TO THE SECTION 90-2.01 OF CALTRANS STANDARD SPECIFICATIONS EXCEPT THAT TESTING WILL NOT BE REQUIRED.
   B. WATER USED FOR CEMENT SLURRY BACKFILL SHALL BE FREE FROM OIL, SALTS AND OTHER IMPURITIES WHICH WOULD HAVE AN ADVERSE EFFECT ON THE QUALITY OF THE BACKFILL MATERIAL.
   C. AT THE OPTION OF THE CONTRACTOR, AGGREGATE SHALL BE EITHER (1) IMPORTED MATERIAL, WHICH IS FREE OF ORGANIC MATERIAL AND OTHER DELETERIOUS SUBSTANCES, OR (2) COMMERCIAL QUALITY CONCRETE SAND. IN EITHER CASE, MATERIAL SELECTED SHALL MEET THE FOLLOWING GRADING:

| SIEVE SIZE | PERCENT (BY WEIGHT) PASSING SIEVE |
|---|---|
| 11/2" | 100 |
| 1" | 80 - 100 |
| 3/4" | 60 - 100 |
| 3/8" | 50 - 100 |
| NO. 4 | 40 - 80 |
| NO. 100 | 10 – 40 |

   D. THE AGGREGATE, CEMENT AND WATER SHALL BE PROPORTIONED EITHER BY WEIGHT OR BY VOLUME. NOT LESS THAN 141 POUNDS OF CEMENT (1.5 SACKS) SHALL BE USED FOR EACH CUBIC YARD OF MATERIAL PRODUCED. THE WATER CONTENT SHALL BE SUFFICIENT TO PRODUCE A FLUID, WORKABLE MIX THAT WILL FLOW AND CAN BE PUMPED WITHOUT SEGREGATION OF THE AGGREGATE WHILE BEING PLACED.
   E. MATERIALS FOR CEMENT SLURRY BACKFILL SHALL BE THOROUGHLY MACHINE MIXED IN A PUGMILL, ROTARY DRUM, OR OTHER APPROVED MIXER. MIXING SHALL CONTINUE UNTIL THE CEMENT AND WATER ARE THOROUGHLY DISPERSED THROUGHOUT THE MATERIAL. CEMENT SLURRY BACKFILL SHALL BE PLACED IN THE WORK WITHIN ONE HOUR AFTER MIXING.

13. ASPHALTIC CONCRETE (AC) PAVEMENT SHALL BE HOT-LAID PLANT MIX ("HOT MIX") OR ENGINEER APPROVED EQUAL. AC SHALL BE 1/2" AC-C2, MAX 15% RAP, WITH PG 64-10 BINDER OR ENGINEER-APPROVED ALTERNATIVE. NEW AC SHALL BE PLACED OVER THE TRENCH WIDTH TO MATCH EXISTING GRADE WITH A TOTAL THICKNESS OF 1 INCH (MIN) OVER EXISTING THICKNESS.

14. AGGREGATE BASE REPLACEMENT SHALL BE CRUSHED MISCELLANEOUS BASE (cmb) TO MATCH EXISTING AND SHALL HAVE THE THICKNESS OF NO LESS THAN THE EXISTING BASE THICKNESS AND IN NO CASE LESS THAN 6 INCHES. PLACE BASE TO RELATIVE COMPACTION OF 95% PER ASTM D1557.

15. CONCRETE BLANKET IS REQUIRED PER CITY OF LOS ANGELES DEPARTMENT OF PUBLIC WORKS (LADPW) STD. PLAN S-255-1 FOR NEW PIPE/CONDUIT CROSSING OVER EXISTING PIPE/CONDUIT WHEN THE CLEARANCE BETWEEN THE TOP OF EXISTING PIPE/CONDUIT and the BOTTOM OF CROSSING PIPE CONDUIT IS LESS THAN 18 INCHES.

16. WHERE APPLICABLE, SUPPORTS FOR EXISTING STORM DRAIN AND SEWER PIPES ACROSS TRENCHES CROSS UNDER BY NEW PIPE/CONDUIT SHALL BE PER LADPW STD-S253-0.

17. WHERE APPLICABLE, SUPPORTS FOR EXISTING CONDUITS ACROSS TRENCHES CROSSED UNDER BY NEW PIPE/CONDUIT SHALL BE PER SPPWC STD PLAN 224-1.

PIPE AND CONDUIT NOTES

18. ADDITIONAL PIPE INFORMATION IS PRESENTED ON THE PIPING AND INSTRUMENTATION DIAGRAMS (P&IDS).

19. UNLESS OTHERWISE ACCEPTABLE TO THE ENGINEER, SLOPE SVE CONVEYANCE PIPING TOWARDS THE WELLS TO ELIMINATE HIGH SPOTS WHEREVER POSSIBLE, AT 0.01 FT/FT MIN.

20. ALL UNDERGROUND PIPES SHALL BE SUPPORTED WITH TEMPORARY JIGS OR TEMPLATES DURING CONSTRUCTION TO MAINTAIN THE REQUIRED SPACING BETWEEN PIPES AND SLOPE. JIGS AND TEMPLATES SHALL BE DESIGNED AND PLACED SO THAT THEY DO NOT PINCH THE PIPE OR CONSTRUCT THE FLOW OF FLUID WHEN IN USE.

21. PRESSURE PIPING SHALL BE TESTED AT 25% GREATER THAN MAXIMUM OPERATING PRESSURE. VACUUM PIPING AND DUAL CONTAINED PIPE ANNULAR SPACE SHALL BE PRESSURE TESTED WITH COMPRESSED AIR AT 10 PSIG. IF TEST PRESSURES DROP (AFTER ALLOWANCE FOR PIPE EXPANSION ALLOWED BY MANUFACTURER, AND RECHARGE TO TEST PRESSURE), WITHIN A TWO HOURS PERIOD, THE PIPE SHALL BE REPAIRED AND RETESTED AT THE CONTRACTOR'S EXPENSE TO MEET THE ABOVE REQUIREMENTS. THE ENGINEER SHALL BE NOTIFIED 24 HOURS PRIOR TO ANY SUCH TEST AND MUST APPROVE TEST RESULTS IN WRITING PRIOR TO BACKFILL.

22. ALL PVC PIPING, VALVES, AND FITTINGS FOR SOIL VAPOR CONVEYANCE SHALL BE SCH40, AND SHALL BE JOINED BY SOLVENT WELDED IN ACCORDANCE WITH MANUFACTURER'S RECOMMENDATIONS, ALL JOINTS SHALL ALIGN NATURALLY AND BE STRESS FREE.

23. ALL PIPELINES SHALL HAVE MINIMUM VERTICAL AND HORIZONTAL CLEARANCES FROM OTHER UNDERGROUND UTILITIES AS REQUIRED BY THE PERMITTING AGENCY STANDARDS AND OTHER LOCAL AND STATE REGULATIONS.

24. ALL PIPING SYSTEM COMPONENTS (I.E., PIPE, FITTINGS, REDUCERS, ETC.) SHALL BE OF THE SAME MATERIAL. HDPE PIPE SHALL BE MANUFACTURED IN THE USA AND IN ACCORDANCE WITH THE REQUIREMENTS OF ASTM F714 AND AWWA C906. HDPE SOLID WALL PIPE SHALL BE MADE FROM A PLASTIC COMPOUND MEETING THE REQUIREMENTS OF STANDARD PE CODE DESIGNATION PE-3408 AS DEFINED BY ASTM D2837 AND ASTM D3350. DUAL CONTAINED HDPE AND FITTINGS SHALL HAVE IPS OD AND SHALL MEET ASTM D 3035. DUAL CONTAINED HDPE PIPE SHALL BE SDR 11 (INNER) AND SDR 17 (OUTER) AND HAVE A PRESSURE RATING OF 160 PSIG AT 73.4°F. HDPE PIPE SHALL BE JOINED BY BUTT FUSION IN ACCORDANCE WITH MANUFACTURER'S RECOMMENDED PROCEDURES. REQUIREMENTS FOR FUSION TIME, TEMPERATURE, AND PRESSURE SHALL BE FOLLOWED. ALL PIPE JOINTS SHALL ALIGN NATURALLY AND BE STRESS FREE. ALL BENDS SHALL BE 3' MIN RADIUS.

25. CONTRACTOR SHALL JOIN HDPE PIPING TO PVC FITTINGS USING TRANSITION COUPLINGS, FOLLOWING MANUFACTURER'S RECOMMENDATIONS AND AS APPROVED BY THE ENGINEER.

26. CONDUIT INSTALLATION REQUIREMENTS
   A. ALL UNDERGROUND SUBSTRUCTURES AND CONDUITS, IN WHICH THE LADWP INSTALLS AND MAINTAINS CABLES, AND ANY OTHER ASSOCIATED DISTRIBUTION SYSTEM COMPONENTS SHALL BE CONSTRUCTED IN ACCORDANCE WITH THE REQUIREMENTS OF LADWP UNDERGROUND CONDUIT AND SUBSTRUCTURES SPECIFICATION NO. 104 (REVISED 03-09-06) AND AS FOLLOWS:
      I FOR INSTALLATION ON PRIVATE PROPERTY: UNDERGROUND CONSTRUCTION STANDARD (UCS) DRAWING H-168 AS LAST REVISED AND PROJECT SPECIFIC ELECTRICAL SERVICE REQUIREMENTS (ESR) TO BE PROVIDED BY LADWP.
      II FOR FOR INSTALLATION ON PUBLIC PROPERTY: SECTION 62.00-62.05 OF THE LOS ANGELES MUNICIPAL CODE AND SSPWC.
   B. MINIMUM COVER/BURIAL DEPTH FOR NEW CONDUITS IS 24 INCHES ON PRIVATE PROPERTY. MINIMUM COVER/BURIAL DEPTH FOR NEW CONDUIT INSTALLATION ON ROAD SURFACE AREA OR PARKWAY AREA (AREA BETWEEN CURB AND PROPERTY LINE) ON PUBLIC PROPERTY IS 30 INCHES BELOW GUTTER GRADE IN CITY STREETS.
   C. SEPARATION BETWEEN NEW CONDUITS
      I PROVIDE A MINIMUM OF 2-INCH SPACING BETWEEN ALL ADJACENT CONDUITS, UNLESS NOTED OTHERWISE. A 2-INCH SAND LAYER AS SHOWN SHALL BE USED WHERE CONDUITS ARE PLACED ON THE TOP OF EACH OTHER.
      II PROVIDE A MINIMUM OF 12-INCH SPACING BETWEEN POWER AND INSTRUMENTATION CONDUITS.
   D. SEPARATION BETWEEN NEW CONDUITS AND EXISTING UTILITIES
      I CONDUIT SECTION(S) AS SHOWN ON THE DRAWINGS SHALL BE CONSTRUCTED UNDER EXISTING CROSSING UNDERGROUND UTILITIES AND SUBSTRUCTURES, UNLESS BY CONSTRUCTING OVER THE EXISTING UTILITIES THE MINIMUM COVER REQUIREMENTS AS SPECIFIED ABOVE ARE MET.
      II PROVIDE A MINIMUM CLEARANCE OF 6 INCHES BETWEEN THE CONDUITS AND OTHER EXISTING CROSSING UTILITIES.
      III PROVIDE A MINIMUM CLEARANCE OF 12 INCHES BETWEEN THE CONDUIT AND EXISTING UTILITY WHEN PARALLELING OTHER EXISTING UTILITIES.

27. ELECTRICAL CONDUIT FOR WELL PUMPS SHALL FOLLOW PROCESS LINE TRENCHES.

BACKFILL AND COMPACTION

28. BEDDING OF THE PIPE SHALL BE DONE IN ACCORDANCE WITH THE DRAWINGS AND AS REQUIRED BY THE PERMITTING AGENCY, WHERE APPLICABLE. CARE SHALL BE TAKEN TO PREVENT ANY DAMAGE OR SHIFTING OF THE PIPE.

29. AFTER PIPE HAS BEEN BEDDED, PLACE BEDDING MATERIAL SIMULTANEOUSLY ON BOTH SIDES OF THE PIPE, KEEPING THE LEVEL OF BEDDING THE SAME ON EACH SIDE. CAREFULLY PLACE THE MATERIAL AROUND THE PIPE SO THAT THE PIPE BARREL IS COMPLETELY SUPPORTED AND THAT NO VOIDS OR UNCOMPACTED AREAS ARE LEFT BENEATH THE PIPE. USE PARTICULAR CARE IN PLACING MATERIAL ON THE UNDERSIDE OF THE PIPE TO PREVENT LATERAL MOVEMENT DURING SUBSEQUENT BACKFILLING.

30. THE CONTRACTOR SHALL INSTALL AND COMPACT A SECOND LAYER OF APPROVED BACKFILL MATERIAL UNLESS NOTED OTHERWISE. PLACE THE BACKFILL MATERIAL CAREFULLY ONTO THE BEDDING MATERIAL PREVIOUSLY PLACED. DO NOT PERMIT FREE FALL OF THE MATERIAL DO NOT DROP SHARP, HEAVY PIECES OF MATERIAL DIRECTLY ONTO THE PIPE.

31. ALL OPEN PIPE ENDS SHALL BE COVERED AT THE END OF THE WORK DAY TO PREVENT FOREIGN OBJECTS FROM ENTERING THE PIPE DURING OFF HOURS (ANIMALS, DIRT, FOREIGN DEBRIS, ETC.)

32. THROUGHOUT THE INSTALLATION PROCESS, THE CONTRACTOR SHALL NOT ALLOW NEWLY INSTALLED PIPING TO BE LEFT UNCOVERED OVERNIGHT WITHOUT PRIOR APPROVAL FROM THE OWNER.

33. WHEN REQUIRED AND SUBJECT TO FIELD CONDITIONS, PROCTOR DENSITY TESTS IN ACCORDANCE WITH ASTM D 1557 SHALL BE USED THROUGHOUT THE COURSE OF THE PROJECT TO DETERMINE THE STANDARD DENSITY OF MATERIAL IN LABORATORY, UNLESS OTHERWISE SPECIFIED.

34. WHEN REQUIRED AND SUBJECT TO FIELD CONDITIONS AND INSTALLATION PROCEDURES, COMPACTION TESTS IN ACCORDANCE WITH ASTM D1556 (SAND CONE METHOD) OR BY ASTM D2922 (NUCLEAR METHODS) SHALL BE REQUIRED TO VERIFY THE IN-PLACE DENSITY OF COMPACTED SOIL BACKFILL. THESE TESTS WILL BE PERFORMED AT LOCATIONS AS DETERMINED IN THE FIELD AND AT A MINIMUM FREQUENCY OF ONCE PER DAY EXCEPT FOR TRENCHES IN PUBLIC RIGHT-OF-WAY (ROW), WHERE THE REQUIREMENTS OF THE PERMITTING AGENCY SHALL BE FOLLOWED, IF APPLICABLE.

35. WHERE REQUIRED, COMPACT SOIL TO NOT LESS THAN THE FOLLOWING PERCENTAGES OF MAXIMUM DRY DENSITY AND OPTIMUM MOISTURE CONTENT, UNLESS NOTED OTHERWISE:
   A. TRENCHES – 90 PERCENT RELATIVE COMPACTION UNLESS SHOWN OTHERWISE ON THE DRAWINGS. SAND CEMENT SLURRY REFILL FOR OVER EXCAVATION--90 PERCENT RELATIVE COMPACTION, UNLESS NOTED OTHERWISE.
   B. ROADWAYS – COMPACT THE TOP 12 INCHES OF SUBGRADE AND EACH LAYER OF BACKFILL OR FILL MATERIAL AT 95 PERCENT MAXIMUM DRY DENSITY AT A MOISTURE CONTENT THAT LIES WITHIN 3 PERCENT OF THE OPTIMUM MOISTURE CONTENT EXCEPT FOR ROADWAYS IN PUBLIC ROW, WHERE THE REQUIREMENTS OF THE PERMITTING AGENCY SHALL BE FOLLOWED, IF APPLICABLE.
   C. ALL OTHER AREAS – COMPACT THE TOP 6 INCHES OF SUBGRADE AND EACH LAYER OF BACKFILL OR FILL MATERIAL AT 90 PERCENT MAXIMUM DRY DENSITY AT A MOISTURE CONTENT THAT LIES WITHIN 3 PERCENT OF THE OPTIMUM MOISTURE CONTENT.

38. CEMENT SLURRY BACKFILL, WHERE USED, SHALL BE PLACED IN A UNIFORM MANNER THAT WILL PREVENT VOIDS IN, OR SEGREGATION OF, THE BACKFILL, AND WILL NOT FLOAT OR SHIFT THE CULVERT. FOREIGN MATERIAL WHICH FALLS INTO THE TRENCH PRIOR TO OR DURING PLACING OF THE CEMENT SLURRY BACKFILL SHALL BE IMMEDIATELY REMOVED.

37. BACKFILLING OVER OR PLACING ANY MATERIAL OVER CEMENT SLURRY BACKFILL SHALL NOT COMMENCE UNTIL 4 HOURS AFTER THE CEMENT SLURRY BACKFILL HAS BEEN PLACED, EXCEPT THAT WHEN CONCRETE SAND IS USED FOR THE AGGREGATE AND THE IN PLACE MATERIAL IS FREE DRAINING, BACKFILLING MAY COMMENCE AS SOON AS THE SURFACE WATER IS GONE.

38. BACKFILL SHALL BE TO A DEPTH OF NO LESS THAN 1" LOWER THAN THE BOTTOM OF THE EXISTING PAVEMENT, SUCH THAT THE RESULTING THICKNESS OF ASPHALT WILL BE AT LEAST 1" GREATER WITHIN THE OUTLINE OF THE TRENCH.

39. IN GENERAL, THE FINAL GRADE SHALL SLOPE AWAY FROM THE STRUCTURES AND PAVED OR GRAVEL AREAS AND TOWARD NATURAL DRAINAGE AREAS. CONSTRUCT FINISHED SURFACES TO PLUS OR MINUS 1 INCH OF THE ELEVATIONS INDICATED. WHERE APPLICABLE, FINAL GRADING SHALL ALLOW APPROXIMATELY 6 INCHES OF CURB EXPOSURE AT THE EQUIPMENT PAD AND A MINIMUM EXPOSURE OF 2 INCHES FOR ALL OTHER CONCRETE STRUCTURES.

40. INSTALL TRACER WIRE AND DETECTABLE MYLAR MARKING TAPE ON ALL BURIED NON-METALLIC UTILITIES (ELECTRICAL, MECHANICAL, AND CIVIL) AS SHOWN ON THE DRAWINGS. TRACER WIRE SHALL BE NO. 12 AWG BARE WIRE CONSISTING OF 7 STRANDS AND CLASS B STRANDING AND SHALL E POSITIVELY ATTACHED TO THE CROWN OF ALL UNDERGROUND NON-METALLIC UTILITIES ALONG THE ENTIRE LENGTH OF THE UTILITY UNLESS NOTED OTHERWISE.THE MARKING (WARNING) TAPE SHALL BE 6? WIDE FOIL X 5 MILS THICK DETECTABLE MYLAR WARNING TAPE AS MANUFACTURED BY SETON IDENTIFICATION PRODUCTS, BRANFORD, CT (PRODUCT #85517); OR APPROVED EQUAL. THE TAPE SHALL BE HIGHLY VISIBLE RED AND COLOR CODED IN ACCORDANCE WITH THE AMERICAN PUBLICS WORKS ASSOCIATE STANDARDS. USE ONE LINE MARKER FOR 16 INCH WIDTH OF TRENCH. IN AREAS WHERE PAVEMENT HAS NOT YET BEEN INSTALLED, TAPE SHALL BE INSTALLED 2 INCHES BELOW FINISHED GRADE.

41. INSTALL FABRIC BONDED GEO-TEXTILE FILTER WITH 10 OUNCES/SY FABRIC FACING UP.

SURFACE RESTORATION

42. CONCRETE DRIVEWAY, SIDEWALK, CURB, AND GUTTER REPLACEMENT SHALL BE EQUIVALENT IN ALL RESPECTS TO EXISTING, INCLUDING EXPOSED AGGREGATE AND/OR BRUSHED FINISH, AND REPLACED IN ACCORDANCE WITH LADPW STANDARD PLANS OR SPPWC AS REQUIRED BY THE PERMITTING AGENCY. IF THE IN-KIND REPLACEMENT REQUIREMENTS CONFLICT WITH THE REQUIREMENTS PRESENTED HERE, THE MORE STRINGENT SHALL APPLY. WHERE PIPE TRENCHING IMPACTS SIDEWALK SLABS, THE WHOLE SLAB (JOINT TO JOINT) SHALL BE REPLACED IN "LIKE KIND" IN ALL RESPECTS.

43. WHERE ENCOUNTERED, CONTRACTOR SHALL SAW CUT AND REPLACE PORTLAND CEMENT CONCRETE (PCC) PAVEMENT IN ACCORDANCE WITH SPPWC STD PLAN NO 132-2. EXISTING PCC PAVEMENT SHALL BE REMOVED IN ACCORDANCE WITH SSPWC 300-1.3. ALL PCC SHALL BE 520-C-2500, UNLESS INDICATED OTHERWISE, AND SHALL BE PLACED OVER THE TRENCH WIDTH TO MATCH EXISTING GRADE WITH A TOTAL THICKNESS OF 1 INCH (MIN) OVER EXISTING THICKNESS TO PROVIDE SLOUGH PER SSPWC 306.1.5.2. #5 DOWEL PINS SHALL BE USED IN CONNECTING NEW AND EXISTING CONCRETE PAVEMENT AND AT CONCRETE CONSTRUCTION JOINTS, PER SSPWC STD PLAN 143.2.

44. CONTRACTOR SHALL BASE PAVE OVER TRENCH TO EXISTING GRADE. A ROLLER SHALL BE USED FOR FINAL COMPACTION. ASPHALT SHALL BE PLACED OVER THE TRENCH WIDTH TO MATCH EXISTING GRADE WITH A TOTAL THICKNESS OF 1 INCH (MIN) OVER EXISTING THICKNESS, WITH A MINIMUM THICKNESS OF 4 INCHES.

45. ALL MARK-OUT AND INSTALLATION OF FINAL STRIPING AND PAVEMENT MARKINGS SHALL BE PERFORMED BY THE CONTRACTOR. QUANTITIES FOR PAINTED OR PLASTIC STRIPING REMOVAL OF EXISTING STRIPING AND INSTALLATION OF PERMANENT STRIPING SHALL BE AS NEEDED.
   a. MARK-OUT SHALL BE BY HEAVY PAINT BRUSH MARKINGS OVER A PULLED ROPE IN THE RESPECTIVE WHITE AND YELLOW COLORS OF THE PROPOSED STRIPING (STRIPING GAPS SHALL BE DOTTED). IF THE MARK-OUT IS TO REMAIN OVERNIGHT BEFORE THE FINAL STRIPING, TEMPORARY REFLECTORIZED OVERLAY MARKERS SHALL BE INSTALLED PER LADOT STANDARD DRAWINGS S-453-0.
   b. ALL FINAL STRIPING AND PAVEMENT MARKINGS SHALL BE IN HOT APPLIED ALKYD THERMOPLASTIC IN ACCORDANCE WITH LADOT SPECIFICATION NUMBERS 51-005-04 AND 76-012-09 UNLESS NOTED OTHERWISE.

46. WHERE ENCOUNTERED, CONTRACTOR SHALL REPLACE SOD AND ALL OTHER LANDSCAPING (SHRUBS, BUSHES, PLANTS, ETC) DISTURBED BY THE TRENCHING WITH NEW MATERIALS MATCHING THE SPECIES OF THE OF THE CURRENT CONDITIONS AND INSTALLED TO MATCH PRE-WORK GRADES AND SLOPES. IN AREAS OF LANDSCAPING, SLURRY BACKFILL SHALL CEASE SUFFICIENTLY SHALLOW TO ALLOW COMPLETION OF THIS SCOPE, AND TO MATCH EXISTING TOPSOIL AT THE SITE. AT A MINIMUM, 12" OF TOPSOIL SHALL BE PLACED UNDER AREAS WHERE GRASS MUST BE REPLACED IN KIND – OR – IN AREAS WHERE SMALL SHRUBS OR BUSHES ARE TO BE REPLACED, THE AMOUNT OF TOPSOIL SHALL BE 1.5 TIMES THE DEPTH OF THE PLANT BULB. THE BACKFILL SHALL NOT PREVENT LANDSCAPING / SURFACE RESTORATION IN KIND.

CALL BEFORE YOU DIG:
UNDERGROUND SERVICE ALERT OF
SOUTHERN CALIFORNIA
TWO WORKING DAYS BEFORE YOU DIG
1-800-227-2600

**PRELIMINARY DESIGN**
**NOT FOR CONSTRUCTION**

REGISTERED PROFESSIONAL ENGINEER
RAVI SUBRAMANIAN
No. C053679
Exp. 06-30-2015
CIVIL
STATE OF CALIFORNIA

| REV. NO. | DATE | DRWN | CHKD | REMARKS |
|---|---|---|---|---|
| 1 | 7-13-12 | PJR | IL | REVISED FOR PDR SUBMITTAL |

DESIGNED BY: JTB
DRAWN BY: PJR
SHEET CHK'D BY: IL
CROSS CHK'D BY: JTB
APPROVED BY: RS
DATE: JULY 2013

CDM Smith
111 Academy Way, Suite 150
Irvine, California, 92617
Tel: (949) 752-5452

OMEGA CHEMICAL SUPERFUND SITE
12504 / 12512 EAST WHITTIER BOULEVARD
12471 WASHINGTON BOULEVARD
WHITTIER, CALIFORNIA

TRENCH SECTIONS AND DETAILS

PROJECT NO. 10500-97768
FILE NAME: C3.3.dwg
SHEET NO.
C-6

C:\cdmxm\riehlepj\d1257128\ C-6 07/11/13 07:47 riehlepj XREFS: CDMS_2234-FULL SVE
©2012 CDM SMITH ALL RIGHTS RESERVED.
REUSE OF DOCUMENTS: THESE DOCUMENTS AND DESIGNS PROVIDED BY PROFESSIONAL SERVICE, INCORPORATED HEREIN, ARE THE PROPERTY OF CDM SMITH AND ARE NOT TO BE USED, IN WHOLE OR PART, FOR ANY OTHER PROJECT WITHOUT THE WRITTEN AUTHORIZATION OF CDM SMITH.

| SYMBOL | DESCRIPTION |
|---|---|
| A 3 b | INCANDESCENT, COMPACT FLUORESCENT OR H.I.D. TYPE LIGHTING FIXTURE<br>"A"–FIXTURE TYPE (SEE LIGHTING FIXTURE SCHEDULE)<br>"b"–CONTROLLED BY SWITCH "b"<br>"3"–CIRCUIT NUMBER |
| A b 3 | FLUORESCENT TYPE LIGHTING FIXTURE<br>NOTATIONS SAME AS ABOVE. |
| A b 3 | WALL OUTLET AND INCANDESCENT COMPACT FLUORESCENT OR H.I.D. LIGHTING FIXTURE. NOTATIONS SAME AS ABOVE. |
| BU–1 3 (*) | EMERGENCY LIGHTING BATTERY UNIT WITH TWO LAMP HEADS<br>BU–1 = FIXTURE TYPE (SEE LIGHTING FIXTURE SCHEDULE)<br>3 = SUPERVISORY CIRCUIT (*) = FIXTURE TAG NUMBER |
| R–2 BU–1(*) | REMOTE ADJUSTABLE EMERGENCY LAMP HEAD * = HOME RUN TO BU INDICATED<br>R–2 – FIXTURE TYPE SEE LIGHTING FIXTURE SCHEDULE |
| A 3 | WALL MOUNTED EXIT SIGN, NOTATIONS SAME AS ABOVE<br>WHEN USED, ARROW INDICATES DIRECTION OF EGRESS |
| | BRANCH CIRCUIT CONDUIT WITH 2#12,1#12G, 3/4"C INSTALLED EXPOSED.<br>FOR MINIMUM SIZE CONDUIT PERMITTED REFER TO THE SPECIFICATIONS.<br>DOES NOT APPLY TO UNDERGROUND DUCTBANKS. |
| | CONDUIT TURNING UP. COMMENTS SAME AS ABOVE. |
| | CONDUIT TURNING DOWN |
| | CONDUIT STUBBED OUT AND CAPPED |
| | CONDUIT RUN CONCEALED, (2#12, 1#12G, 3/4"C UNLESS OTHERWISE NOTED) |
| | LIQUIDTITE FLEXIBLE CONDUIT. (2#12, 1#12G., 3/4"C. UNLESS OTHERWISE NOTED.) |
| LP–1 1,3 | HOMERUN, CIRCUITS 1 AND 3 RUN TO PANEL LP–1 |
| OR LP** LP** | LIGHTING PANELBOARD **–NAME AS INDICATED |
| OR PP** PP** | POWER PANELBOARD **–NAME AS INDICATED |
| J J | JUNCTION BOX |
| 2 (3#3/0, 1#2G., 3"C.) | TWO 3" CONDUITS EACH CONTAINS<br>THREE #3/0 AWG CONDUCTORS AND ONE #2 GROUND. |
| 3#12,1#12G. | THREE (3) NO.12 AWG CONDUCTORS AND ONE (1) NO.12 EQUIPMENT GROUNDING CONDUCTOR |
| 1–2/C#16TS | INSTRUMENT CABLE, TWISTED PAIR OR TRIPLEX AS NOTED WITH OVERALL SHIELD AND JACKET, CONDUCTOR SIZE AND QUANTITY AS NOTED |
| $a | SINGLE POLE SWITCH, "a" INDICATES CONTROL OF LIGHTS "a"<br>"m" INDICATES MOTOR HORSPOWER RATED. |
| $ 3 a | THREE WAY SWITCH, "a" INDICATES CONTROL OF LIGHTS "a" |
| * | DUPLEX RECEPTACLE, 20A, 120V, 3W, SINGLE PHASE<br>* C – MOUNTED ABOVE COUNTER TOP<br>GF – GROUND FAULT INTERRUPTER TYPE<br>WP – WEATHERPROOF<br>3 – BRANCH CIRCUIT NUMBER<br>T – TRANSIENT VOLTAGE SURGE SUPRESSOR<br>IC – ISOLATED GROUND |
| * 4 | SIMPLEX RECEPTACLE, 120V, 20A, 2P, 3W, NOTATIONS SAME AS ABOVE FOR DUPLEX RECEPTACLE<br>* TL – LOCKING TYPE<br>WP – WEATHERPROOF |
| * 60 3 4W | SPECIAL PURPOSE RECEPTACLE<br>* = VOLTAGE RATING<br>3 = NUMBER OF POLES<br>4W = WIRES IN ADDITION TO GROUND<br>60 = AMPERE RATING |
| K | TELEPHONE OUTLET FOR DESK TYPE HANDSET<br>K = KEY SWITCH |
| K | TELEPHONE OUTLET FOR WALL TYPE HANDSET (MOUNT UP 4'–6")<br>K = KEY SWITCH |
| | PAGE/PARTY TELEPHONE OUTLET FOR DESK TYPE HANDSET |
| | PAGE/PARTY TELEPHONE OUTLET FOR WALL TYPE HANDSET (MOUNT UP 4'–6") |
| TM | TELEPHONE CABINET OR BACKBOARD AS SPECIFIED |
| C | LIGHTING CONTACTOR, MECHANICALLY HELD TYPE |
| DM | DAMPER MOTOR |
| PC | PHOTOCELL |
| F | FIRE ALARM MANUAL PULL STATION, MOUNT UP 4'–0" |
| H 200 R | HEAT ACTUATED FIRE DETECTOR<br>200 = 200°F FIXED TEMP<br>R = FIXED TEMP, RATE–OF–RISE TYPE |
| I | SMOKE DETECTOR PHOTOELECTRIC TYPE UNLESS OTHERWISE NOTED.<br>I = IONIZATION TYPE<br>D = DUCT SMOKE DETECTOR |
| S | PAGING SPEAKER FLUSH MOUNTED. CEILING TYPE |
| S | PAGING SPEAKER SURFACE MOUNTED. CEILING TYPE |
| WS | SECURITY ALARM WINDOW SWITCH |
| F 15 | FIRE ALARM STROBE, MOUNT UP 6'–8". NUMERAL INDICATES CANDELA RATING |
| F 15 | FIRE ALARM HORN AND STROBE LIGHT COMBINATION. MOUNT UP 6'–8". NUMERAL INDICATES CANDELA RATING |
| SFS | SPRINKLER FLOW ALARM SWITCH |
| FACP | FIRE ALARM CONTROL PANEL |
| SACP | SECURITY ALARM CONTROL PANEL |
| FB | WEATHERPROOF HI–INTENSITY FIRE ALARM BEACON |
| VSS | SPRINKLER VALVE SUPERVISORY SWITCH |
| DS | SECURITY ALARM DOOR SWITCH |
| K | SECURITY ALARM KEY PAD |
| | SECURITY ALARM MOTION DETECTOR |
| | INDICATES MOTOR STARTER OR MOTOR CONTROL EQUIPMENT WITHIN THE ENCLOSURE |
| ESA | EYE WASH SHOWER ALARM STATION |
| R | SECURITY ALARM CARD ACCESS READER |
| | EXOTHERMIC WELD CONNECTION |

| ONE LINE OR CONTROL DIA. | PLAN | DESCRIPTION |
|---|---|---|
| FRAME / TRIP | CB | LOW VOLTAGE CIRCUIT BREAKER, THREE POLE UNLESS NOTED OTHERWISE |
| * | * | COMBINATION MOTOR CIRCUIT PROTECTOR AND MAGNETIC MOTOR STARTER, FULL VOLTAGE NON–REVERSING UNLESS NOTED OTHERWISE:<br>* FVNR – FULL VOLTAGE NON–REVERSING<br>RVAT – REDUCED VOLTAGE AUTO TRANSFORMER<br>2S1W – TWO SPEED, ONE WINDING<br>2S2W – TWO SPEED, TWO WINDING<br>SS – SOLID STATE SOFT MOTOR STARTER |
| * | * | NON–FUSIBLE DISCONNECT SWITCH, 600 VOLT, 3 POLE<br>* AMPERE RATING NOTED IF OTHER THAN 30A |
| SWITCH / FUSE | F | FUSIBLE DISCONNECT SWITCH, 600 VOLT, 3 POLE<br>AMPERE RATING AND FUSE SIZE AS NOTED |
| | P 2 | MANUAL MOTOR STARTER WITH THERMAL OVERLOAD HEATER<br>P – PILOT LIGHT<br>2 – 2 POLES |
| | T | TRANSFORMER, RATING AND CONNECTIONS AS NOTED |
| * A TO 5 | — | CURRENT TRANSFORMER<br>* QUANTITY<br>A = PRIMARY AMPERES |
| V–120 * | — | POTENTIAL TRANSFORMER<br>* QUANTITY<br>V = PRIMARY VOLTS |
| SA | — | SURGE ARRESTER |
| * | — | SPECIAL CAPACITOR<br>SC SURGE CAPACITOR<br>PF POWER FACTOR CORRECTION CAPACITOR |
| | | GROUND OR GROUND ROD |
| 30A | — | FUSE, AMPERE RATING AS NOTED |
| 5 | M | MOTOR, NUMERAL INDICATES HORSEPOWER |
| Y | G | GENERATOR, RATINGS AND CONNECTIONS AS NOTED |
| VS VM * | — | VOLTMETER WITH SWITCH, 3 PHASE<br>* RANGE AS NOTED |
| AS AM * | — | AMMETER WITH SWITCH, 3 PHASE<br>* RANGE AS NOTED |
| * | — | METER – INDICATING/RECORDING TYPE<br>* WM – WATTMETER<br>WHM – WATTHOUR METER<br>WHDM – WATTHOUR DEMAND METER<br>PF – POWER FACTOR METER<br>ETM – RUNNING TIME METER<br>TRANSDUCER<br>* AX – CURRENT TRANSDUCER<br>WX – WATT TRANSDUCER<br>WHX – WATT WATTHOUR TRANSDUCER |
| #KW OR #KW | E | UNIT HEATER – ELECTRIC HEATING COIL AND FAN<br># = RATING |
| — | U | UNIT HEATER – STEAM OR WATER HEATING COIL AND FAN |
| K | — | KEY INTERLOCK |
| TB | — | VOLTAGE OR CURRENT TEST BLOCK |
| | — | MECHANICAL CONNECTION OR INTERLOCK |
| | — | CONDUCTORS OR CONDUITS CROSSING PATHS BUT NOT CONNECTED |
| | — | CONDUCTORS ELECTRICALLY CONNECTED |
| | — | INDICATES LIMITS OF EQUIPMENT OR WIRING ENCLOSURE |
| | — | PUSHBUTTON, MOMENTARY CONTACT, SPRING RETURN , NORMALLY CLOSED |
| | — | PUSHBUTTON, MOMENTARY CONTACT, SPRING RETURN NORMALLY OPEN |
| | ES | EMERGENCY STOP PUSHBUTTON WITH RED MUSHROOM HEAD OPERATOR , MAINTAINED CONTACT, PUSH–TO–STOP PULL TO RESET. |
| | PBL | START–STOP PUSHBUTTON CONTROL STATION (MOMENTARY CONTACT) WITH LOCKOUT DEVICE ON STOP |
| | PBM | START–STOP PUSHBUTTON CONTROL STATION, MAINTAINED CONTACT WITH LOCKOUT DEVICE ON STOP |
| A B* (XO) (OX) | LR | TWO POSITION SELECTOR SWITCH, MAINTAINED CONTACT<br>POSITION / 1–CONTACT / 2–CONTACT<br>A / X / O<br>B / O / X<br>X–CLOSED O–OPEN<br>* NAMEPLATE (A/B)<br>LR – LOCAL/REMOTE |
| A B C* (XOO) (OXO) (OOX) | HOA<br>LOR<br>RSL | THREE POSITION SELECTOR SWITCH, MAINTAINED CONTACT<br>POSITION / 1–CONTACT / 2–CONTACT / 3–CONTACT<br>A / X / O / O<br>B / O / X / O<br>C / O / O / X<br>X–CLOSED O–OPEN<br>* NAMEPLATE (A/B/C) HOA – HAND/OFF/AUTO<br>LOR – LOCAL/OFF/REMOTE<br>RSL – RAISE/STOP/LOWER<br>HOR – HAND/OFF/REMOTE<br>TOA – TEST/OFF/AUTO |
| BY DIV. 16 MO M BY OTHERS | BY DIV. 16 MO M BY OTHERS | MOTOR OPERATED GATE OR VALVE. |
| CS | CS | MOTOR OPERATED REMOTE CONTROL STATION. |
| | | CABLE SEAL AND EXPLOSION PROOF SEAL FITTING |
| 100 A ATS–1 N S | — | AUTOMATIC OR MANUAL TRANSFER SWITCH<br>"N" INDICATES NORMAL OR PREFERRED SOURCE<br>"S" INDICATES STAND BY OR ALTERNATE SOURCE<br>100 A INDICATES CONTINUOUS CURRENT RATING |

| ONE LINE OR CONTROL DIA. | PLAN | DESCRIPTION |
|---|---|---|
| | LS OR ■ | LIQUID LEVEL (FLOAT) SWITCH<br>NORMALLY OPEN, CLOSES ON RISING LEVEL<br>NORMALLY CLOSED, OPENS ON RISING LEVEL |
| | PS OR ■ | PRESSURE OR VACUUM SWITCH<br>NORMALLY OPEN, CLOSES ON RISING PRESSURE<br>NORMALLY OPEN, CLOSES ON DROPPING PRESSURE<br>NORMALLY CLOSED, OPENS ON RISING PRESSURE<br>NORMALLY CLOSED, OPENS ON DROPPING PRESSURE |
| | TS OR T OR ■ | TEMPERATURE ACTUATED SWITCH (THERMOSTAT)<br>NORMALLY OPEN, CLOSES ON RISING TEMPERATURE<br>NORMALLY OPEN, CLOSES ON DROPPING TEMPERATURE<br>NORMALLY CLOSED, OPENS ON RISING TEMPERATURE<br>NORMALLY CLOSED, OPENS ON DROPPING TEMPERATURE |
| | FS OR ■ | FLOW SWITCH (AIR, WATER, ETC.)<br>NORMALLY OPEN, CLOSES ON INCREASED FLOW<br>NORMALLY CLOSED, OPENS ON INCREASED FLOW |
| | ZS OR ■ | POSITION (LIMIT) SWITCH<br>NORMALLY OPEN – HELD CLOSED<br>NORMALLY OPEN<br>NORMALLY CLOSED – HELD OPEN<br>NORMALLY CLOSED |
| SV | SV | SOLENOID OPERATED VALVE |
| | HTR | STRIP HEATER OR HEATING ELEMENT |
| * | — | PILOT LIGHT, COLOR AS NOTED<br>* R – RED<br>G – GREEN<br>A – AMBER<br>B – BLUE<br>W – WHITE |
| * | — | PILOT LIGHT, PUSH TO TEST TYPE<br>* COLOR AS NOTED ABOVE |
| CR | — | RELAY COIL, NUMBER AS INDICATED |
| M # | — | MOTOR STARTER COIL, NUMBER AS INDICATED |
| | — | CONTACT, NORMALLY OPEN (NO) |
| | — | CONTACT, NORMALLY CLOSED (NC) |
| | — | OVERLOAD RELAY HEATER (OL) |
| TD 0–60 SEC | — | TIME DELAY RELAY, RANGE AS NOTED<br>SET POINT AS NOTED<br>TDE–TIME DELAY AFTER ENERGIZATION–ON DELAY<br>TDD–TIME DELAY AFTER DE–ENERGIZATION–OFF DELAY<br>NOTC – NORMALLY OPEN, TIMED CLOSE WHEN ENERGIZED<br>NCTO – NORMALLY CLOSED, TIMED OPEN WHEN ENERGIZED<br>NOTO – NORMALLY OPEN, TIMED OPEN WHEN DE–ENERGIZED<br>NCTC – NORMALLY CLOSED, TIMED CLOSE WHEN DE–ENERGIZED |
| RTD | — | RESISTANCE TEMPERATURE DETECTOR |
| — | * –## | FIELD INSTRUMENT, TAG NO. AS INDICATED<br>## – INDICATES LOOP NO.<br>* – INDICATES INSTRUMENT TYPE DEFINED ON LOOP SHEETS OR P & ID |
| # | — | UTILIZED WITH OTHER CONTROL SCHEMATIC SYMBOLS TO DEPICT THE PHYSICAL LOCATION OF THE DEVICE<br># REPRESENTS<br>SEE LOCATION LEGEND ON DRAWINGS |
| | | INDICATED EQUIPMENT AND MATERIALS TO BE DEMOLISHED |
| VE OR VE | — | VIBRATION DETECTOR |
| ETM | — | ELAPSED TIME METER |
| — | DM | DAMPER MOTOR |
| TYPE A | | INDICATES THAT ALL LUMINAIRES WITHIN THE ROOM OR AREA IN WHICH THIS NOTATION APPEARS SHALL BE TYPE "A" UNLESS OTHERWISE NOTED |
| DAMP | | INDICATES THAT ALL ELECTRICAL EQUIPMENT AND MATERIALS INSTALLED WITHIN THE ROOM OR AREA IN WHICH THIS NOTATION APPEARS SHALL BE OF NEMA 12 CONSTRUCTION AND SUITABLE FOR USE IN A DAMP OR WET LOCATION |
| WET | | INDICATES THAT ALL ELECTRICAL EQUIPMENT AND MATERIALS INSTALLED WITHIN THE ROOM OR AREA IN WHICH THIS NOTATION APPEARS SHALL BE OF WATERTIGHT OR NEMA 4 CONSTRUCTION SUITABLE FOR USE IN A WET LOCATION, UNLESS NOTED OTHERWISE |
| CORROSIVE | | INDICATES THAT ALL ELECTRICAL EQUIPMENT AND MATERIALS INSTALLED WITHIN THE ROOM OR AREA IN WHICH THIS NOTATION APPEARS SHALL BE OF NEMA 4X, CORROSION RESISTANT CONSTRUCTION SUITABLE FOR USE IN A WET LOCATION, UNLESS NOTED OTHERWISE |
| CLASS I, DIV. GROUP D | | INDICATES THAT ALL ELECTRICAL EQUIPMENT AND INSTALLATION WITHI THE ROOM OR AREA IN WHICH THIS NOTATION APPEARS______SHALL CONFORM TO N.E.C. REQUIREMENTS FOR THE HAZARDOUS AREA CLASSIFICATION SHOWN |
| GD/VF # | GD/VF # | GAS DETECTOR/VENTILATION FAILURE ALARM, # INDICATES TYPE OF UNIT.<br>1 = MASTER, 2 = REMOTE |
| | | GROUND WELL |

## STANDARD ABBREVIATIONS

| | |
|---|---|
| A | AMPERES |
| AC | ALTERNATING CURRENT |
| AF | AMPERE FRAME |
| AFC | ABOVE FINISHED CONCRETE |
| AFF | ABOVE FINISHED FLOOR |
| AFG | ABOVE FINISHED GRADE |
| AIC | AMPERE INTERRUPTING CURRENT |
| AT | AMPERE TRIP |
| ATS | AUTOMATIC TRANSFER SWITCH |
| AUX | AUXILIARY |
| AUTO | AUTOMATIC |
| AWG | AMERICAN WIRE GAUGE |
| BC | BARE COPPER |
| BD | BOARD |
| BKR | BREAKER |
| BLDG. | BUILDING |
| C | CONDUIT |
| CB | CIRCUIT BREAKER |
| CKT | CIRCUIT |
| CLG | CEILING |
| C.O. | CONDUIT ONLY |
| COND | CONDUCTOR |
| CONT | CONTROL |
| CONTD | CONTINUED |
| CPT | CONTROL POWER TRANSFORMER |
| CP | CONTROL PANEL |
| CT | CURRENT TRANSFORMER |
| CU | COPPER |
| CR | CONTROL RELAY |
| DC | DIRECT CURRENT |
| DISC | DISCONNECT |
| DISC SW | DISCONNECT SWITCH |
| DMM | DIGITAL METERING MODULE |
| DPDT | DOUBLE POLE DOUBLE THROW |
| DPST | DOUBLE POLE SINGLE THROW |
| DWG | DRAWING |
| DWP | LOS ANGELES DEPARTMENT OF WATER AND POWER |
| DS | DOOR SWITCH |
| EL,ELEV | ELEVATION |
| EO | ELECTRICALLY OPERATED |
| EXIST | EXISTING |
| FBO | FURNISHED BY OWNER |
| FDR | FEEDER |
| FIN | FINISHED |
| FLA | FULL LOAD AMPS |
| FLEX | FLEXIBLE |
| FM | FLOW METER |
| FS | FLOW SWITCH |
| FT OR ' | FEET OR FOOT |
| FT | FLOW TRANSMITTER |
| FUT | FUTURE |
| FVNR | FULL VOLTAGE NON REVERSING |
| GALV | GALVANIZED |
| GD | GAS DETECTORS |
| GFI | GROUND FAULT INTERRUPTER |
| GFP | GROUND FAULT PROTECTION |
| GND OR G | GROUND |
| GRS | GALVANIZED RIGID STEEL |
| HH | HANDHOLE |
| HOA | HAND/OFF/AUTO |
| HTR | HEATER |
| HS | HAND SWITCH |
| IC | INTERRUPTING CURRENT |
| IN OR " | INCHES OR INCH |
| IND | INDICATING |
| INST | INSTANTANEOUS |
| INSTR | INSTRUMENT |
| INTLK | INTERLOCK |
| JB OR J | JUNCTION BOX, CONDULET OR FITTING AS REQUIRED BY NEC. UNLESS OTHERWISE NOTED |
| kA | KILO AMPERES |
| KW | KILOWATTS |
| LCL | LONG CONTINUOUS LOAD |
| LCP | LOCAL CONTROL PANEL |
| LES | LOCAL EMERGENCY STOP |
| LEV | LEVEL |
| LIM | LIMIT |
| LR | LOCAL/REMOTE |
| LOR | LOCAL/OFF/REMOTE |
| LOS | LOCKOUT STOP STATION |
| LS | LEVEL OR LIMIT SWITCH |
| LT | LIGHT |
| LTG | LIGHTING |
| LV | LOW VOLTAGE |
| MA | MILLIAMPERE |
| MAINT | MAINTAINED |
| MAN | MANUAL |
| MAX | MAXIMUM |
| MC | MAINTAINED CONTACT |
| MCC | MOTOR CONTROL CENTER |
| MCM | THOUSAND CIRCULAR MILS |
| MCP | MOTOR CIRCUIT PROTECTOR |
| MH | MANHOLE |
| L | LENGTH |
| MIN | MINIMUM OR MINUTE |
| MLO | MAIN LUGS ONLY |
| MOV | MOTOR OPERATED VALVE ACTUATOR |
| MTG | MOUNTING |
| MTR | MOTOR |
| N | NEUTRAL |
| NA | NON–AUTOMATIC |
| NC | NORMALLY CLOSED |
| NCIO | NORMALLY CLOSED, INSTANTANEOUS OPEN |
| NCTC | NORMALLY CLOSED, TIME CLOSE |
| NCTO | NORMALLY CLOSE, TIME OPEN |
| NEC | NATIONAL ELECTRIC CODE |
| NIC | NOT IN CONTRACT |
| No | NUMBER |
| NO | NORMALLY OPEN |
| NOIC | NORMALLY OPEN, INSTANTANEOUS CLOSE |
| NOTC | NORMALLY OPEN, TIME CLOSE |
| NOTO | NORMALLY OPEN, TIME OPEN |
| NP | NAMEPLATE |
| NTS | NOT TO SCALE |
| O/H | OVERHEAD LINE |
| OL | OVERLOAD |
| OTT | OVERTEMP SWITCH |
| PB | PUSHBUTTON |
| PB | PULLBOX |
| PC | PHOTOCELL |
| PCV | PUMP CONTROL VALVE |
| PE | PHOTOELECTRIC EYE |
| PLC | PROGRAMMABLE LOGIC CONTROLLER |
| PMR | POWER MONITOR RELAY |
| PNL | PANEL |
| POS | POSITION |
| PR | PAIR |
| PRI | PRIMARY |
| PS | PRESSURE SWITCH |
| PT | POTENTIAL TRANSFORMER |
| PVC | POLYVINYL CHLORIDE |
| PVC/RGS | PVC JACKETED RIGID GALVANIZED STEEL CONDUIT |
| PW | PART WINDING |
| RECEP | RECEPTACLE |
| RGS | RIGID GALVANIZED STEEL CONDUIT |
| RTU | REMOTE TERMINAL UNIT |
| RVAT | REDUCED VOLTAGE AUTO TRANSFORMER |
| RVYD | REDUCED VOLTAGE WYE DELTA |
| SCE | SOUTHERN CALIFORNIA EDISON |
| SEC | SECONDARY |
| SEL | SELECTOR |
| SP | SPARE |
| SPEC | SPECIFICATION |
| SS | STAINLESS STEEL |
| SPDT | SINGLE POLE DOUBLE THROW |
| SPST | SINGLE POLE SINGLE THROW |
| ST | SHUNT TRIP |
| STA | STATION |
| STL | STEEL |
| STP | SHIELDED TWISTED PAIR |
| STR | STARTER |
| STT | SHIELDED TWISTED TRIPLET |
| SV | SOLENOID VALVE |
| SW | SWITCH |
| SWBD | SWITCHBOARD |
| TB | TERMINAL BOX |
| TD | TIME DELAY |
| TEL | TELEPHONE |
| TEMP | TEMPERATURE |
| TERM | TERMINAL |
| TM | TELEMETRY |
| TS | TEMPERATURE SWITCH |
| TS2W | TWO SPEED TWO WINDING |
| TW/SH | TWISTED SHIELDED |
| TYP | TYPICAL |
| UNGND | UNDERGROUND |
| UON | UNLESS OTHERWISE NOTED |
| V | VOLTS |
| VD | VOLTAGE DROP |
| VFD | VARIABLE FREQUENCY DRIVE |
| W | WATTS |
| W/ | WITH |
| W/O | WITHOUT |
| WP | WEATHERPROOF |
| XFMR | TRANSFORMER |
| XP | EXPLOSION PROOF |
| ZS | POSITION SWITCH OR LIMIT SWITCH |
| 3W | THREE WIRE |
| 4W | FOUR WIRE |

## NOTES:

1 SCOPE: THE WORK SPECIFIED IN THIS SECTION INCLUDES PROVIDING LABOR, MATERIAL, EQUIPMENT AND SERVICES NECESSARY FOR INSTALLING ELECTRICAL EQUIPMENT AND CONTROL PANELS, INCLUDING ROUTING OF ALL CONDUITS AND WIRINGS.

2 THE ELECTRICAL DRAWINGS ARE DIAGRAMMATIC. THE EQUIPMENT FOOTPRINTS AND LOCATIONS ARE SHOWN FOR CONTRACTOR TO FIELD VERIFY BEFORE INSTALLATION. THE CONTRACTOR SHALL VERIFY ALL CONDITIONS AND DATA INFORMATION AS INDICATED ON THE DRAWINGS AND PROVIDE A DETAILED ELECTRICAL SITE PLAN TO SCALE FOR ENGINEER'S APPROVAL PRIOR TO CONSTRUCTION.

3 THE CONTRACTOR SHALL PROVIDE A SET OF AS–BUILT DRAWINGS INDICATING ALL CHANGES MADE DURING CONSTRUCTION AND DEVIATIONS FROM THE ELECTRICAL DRAWINGS.

4 ALL WORK SHALL COMPLY WITH THE LATEST EDITION OF THE CALIFORNIA ELECTRICAL CODE, NATIONAL ELECTRICAL CODE (NEC) AND ALL OTHER APPLICABLE FEDERAL, STATE AND LOCAL CODES. WHERE CONSTRUCTION DOCUMENTS INDICATE MORE RESTRICTIVE REQUIREMENTS, THE CONSTRUCTION DOCUMENTS SHALL GOVERN, BUT THE CONSTRUCTION DOCUMENTS SHALL NOT BE INTERPRETED AS AUTHORITY TO VIOLATE ANY CODE OR REGULATIONS.

5 ALL MATERIALS AND EQUIPMENT SHALL BE NEW AND SHALL BEAR THE UNDERWRITERS LABEL (UL) AND SHALL BE INSTALLED IN THE MANNER FOR WHICH THEY ARE DESIGNED AND APPROVED.

6 UNLESS OTHERWISE NOTED, ALL WIRES SHALL BE COPPER. ALL WIRES SHALL BE UL LISTED, RATED FOR 600V, STRANDED COPPER CONDUCTORS TYPE XHHW INSULATION FOR NO. 6 AND LARGER, THHN/THWN INSULATION FOR NO. 8 AND SMALLER, NO. 12 MINIMUM FOR POWER, NO. 14 MINIMUM FOR CONTROL AND TWISTED SHIELDED PAIR OR TRIAD CABLES, NO. 16 MINIMUM FOR INSTRUMENTATION.

7 THE CONTRACTOR SHALL PROVIDE ALL WIRES AND CONDUITS WITH MINIMUM BENDS (MAXIMUM FOUR 90 DEG. BENDS), AND IN SUCH MANNER AS TO CONFORM TO THE STRUCTURE, AVOID OBSTRUCTIONS, PRESERVE HEAD ROOM, KEEP OPENINGS AND PASSAGEWAYS CLEAR AND MEET ALL STRUCTURAL CODE REQUIREMENTS.

8 THE CONTRACTOR SHALL NOT BORE, NOTCH OR IN ANYWAY CUT INTO STRUCTURAL MEMBER WITHOUT PREWRITTEN APPROVAL FROM THE STRUCTURAL ENGINEER.

9 THE ENTIRE ELECTRICAL INSTALLATION, INCLUDING ALL METALLIC STRUCTURES AND SUPPORT SHALL BE GROUNDED AS REQUIRED BY NEC AND ALL APPLICABLE LOCAL CODES.

10 THE ENTIRE WIRING SYSTEM SHALL BE TESTED FOR SHORT CIRCUITS, GROUNDS AND INSULATION RESISTANCE BETWEEN CONDUCTORS AND GROUND.

11 ALL FIXTURES AND ELECTRICAL EQUIPMENT INSTALLED SHALL HAVE ENCLOSURE WITH NEMA RATING 12 FOR INDOOR, 3R FOR OUTDOOR, 4X FOR CHEMICAL CORROSIVE RESISTIVE CONDITIONS, NEMA 4 FOR WET AREA AND CLASS 1, DIV. 1 FOR HAZARDOUS CONDITIONS.

12 ALL ABOVE AND UNDERGROUND CONDUITS IN HAZARDOUS LOCATIONS, INCLUDING FITTINGS, CONTROL STATIONS AND LOCKOUT STOP SHALL BE PVC COATED GALVANIZED RIGID STEEL WITH 3/4 INCH MINIMUM TRADE SIZE. CHEMICAL SEALS SHALL BE INSTALLED IN CONDUITS LEAVING CHEMICAL CONTAINMENT AREA TO MINIMIZE THE POSSIBILITY OF THE CONDUIT SYSTEM ACTING AS A DRAIN.

13 ALL CONDUITS SHALL HAVE ALL CONNECTIONS AND TERMINATIONS SEALED WATER AND GAS TIGHT. ANY WALL PENETRATION SHALL BE WATER AND GAS TIGHT SEAL RECOMMENDED BY VENDOR.

14 CONDUIT AND WIRE IS NOT SHOWN FOR FIXTURES, SWITCHES AND/OR RECEPTACLES, HOWEVER, IT SHALL BE PROVIDED BY THE ELECTRICAL CONTRACTOR AND SHALL BE:
   a. 3/4" (MIN.) CONDUIT RUN
      1. EXPOSED IN UNFINISHED AREAS.
      2. CONCEALED ABOVE HUNG CEILINGS AND IN WALLS AND SLABS IN FINISHED AREAS.
   b. NO. 12 COPPER (MIN.) TYPE "THWN/THHN" NO. OF WIRES AS REQUIRED.

15 SWITCHES SHALL BE MOUNTED 4'–0" ABOVE FINISHED FLOOR UNLESS OTHERWISE NOTED. RECEPTACLES SHALL BE MOUNTED 2'–0" ABOVE FINISHED FLOOR UNLESS OTHERWISE NOTED, EXCEPT RECEPTACLES IN CONCRETE BLOCK WALLS, IN OFFICES OR AREAS WITH HUNG CEILINGS, WHICH SHALL BE MOUNTED 1'–6" ABOVE FINISHED FLOOR UNLESS OTHERWISE NOTED.

16 SWITCHGEAR AND MCC COMPARTMENT DESIGNATIONS AS INDICATED BELOW:
   BLANK: NOT INTENDED FOR USE. PLATE ONLY
   SPACE: CONTAINS NECESSARY BUS AND HARDWARE FOR FUTURE ADDITION OF BREAKERS OR STARTERS WITHIN SIZE RANGE SHOWN
   SPARE: CONTAINS A COMPLETE BREAKER OR STARTER INSTALLED, SIZE AS INDICATED FOR FUTURE USE

**GENERAL NOTE**

THIS IS A STANDARD LEGEND. SOME SYMBOLS MAY NOT APPEAR ON THE DRAWINGS.

**PRELIMINARY DESIGN NOT FOR CONSTRUCTION**

REGISTERED PROFESSIONAL ENGINEER NICOLA ABDEL– No. E 9902 Exp. 06/30/2015 ELECTRICAL STATE OF CALIFORNIA

| REV. NO. | DATE | DRWN | CHKD | REMARKS |
|---|---|---|---|---|
| 2 | 5/17/13 | TCA | GM | REVISED FOR PDR SUBMITTAL |
| 1 | 10/24/12 | PJR | JTB | PDR SUBMITTAL |

DESIGNED BY: T. ADAMS
DRAWN BY: T. ADAMS
SHEET CHK'D BY: G. MESSIH
CROSS CHK'D BY: J. BAMER
APPROVED BY: G. MESSIH
DATE: JULY 2013

CDM Smith
111 Academy Way, Suite 150
Irvine, California, 92617
Tel: (949) 752-5452

OMEGA CHEMICAL SUPERFUND SITE
12504 / 12512 EAST WHITTIER BOULEVARD
12471 WASHINGTON BOULEVARD
WHITTIER, CALIFORNIA

ELECTRICAL
LEGEND AND NOTES

PROJECT NO. 10500–97768
FILE NAME: E–1
SHEET NO.
E-1

C:\cdmxm\riehlepj\d1257128\ E–1 05/14/13 14:37 riehlepj XREFS: PRELIM NOT FOR CONST, CDMS_2234–FULL SVE, CA–Rovi–S–2013

© 2012 CDM SMITH ALL RIGHTS RESERVED.
REUSE OF DOCUMENTS: THESE DOCUMENTS AND DESIGNS PROVIDED BY PROFESSIONAL SERVICE, INCORPORATED HEREIN, ARE THE PROPERTY OF CDM SMITH AND ARE NOT TO BE USED, IN WHOLE OR PART, FOR ANY OTHER PROJECT WITHOUT THE WRITTEN AUTHORIZATION OF CDM SMITH.

NOTES:

1. VENDOR PROVIDED EQUIPMENT.

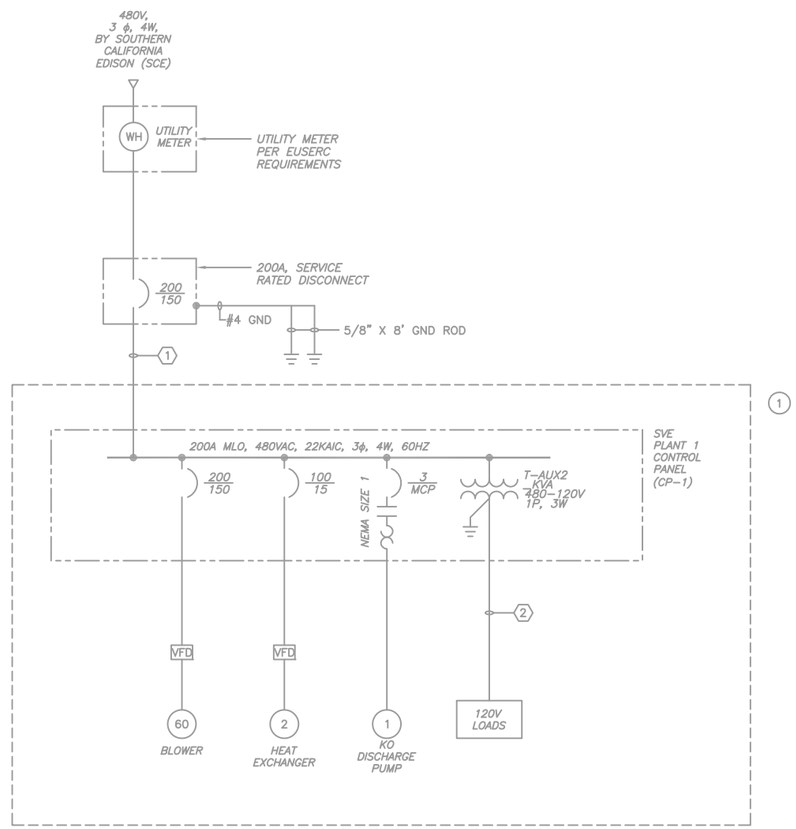


PLANT 1 – SOIL VAPOR EXTRACTION SYSTEM

SINGLE LINE DIAGRAM

N.T.S.

## CONDUIT AND WIRE LEGEND

(NUMBERS REFERENCE THIS SHEET ONLY)

| NO. | DESCRIPTION |
|---|---|
| 1 | 2"C, 3#1, 1#2 GND |
| 2 | 1/2"C, 2#12, 1#12 GND |

## LOAD COMPUTATION AT 480V LEVEL

| LOADS | HP/KVA | AMPERE |
|---|---|---|
| MAIN BLOWER | 60HP | 77 |
| KO DISCHARGE PUMP | 2HP | 3.4 |
| HEAT EXCHANGER | 1HP | 2.1 |
| SUBTOTAL AMPERE | | 82.5 |
| 25% LARGEST MOTOR | | 19.25 |
| TOTAL CONNECT LOAD AMPERE | | 101.75 |

**PRELIMINARY DESIGN**
**NOT FOR CONSTRUCTION**

REGISTERED PROFESSIONAL ENGINEER
GAMAL NIQOLA ABDEL-MESSIH
No. E 9902
Exp. 06/30/2015
ELECTRICAL
STATE OF CALIFORNIA

| REV. NO. | DATE | DRWN | CHKD | REMARKS |
|---|---|---|---|---|
| 5 | 5/17/13 | TCA | GM | REVISED FOR PDR SUBMITTAL |
| 4 | 10/24/12 | PJR | JTB | PDR SUBMITTAL |
| 3 | 5-11 | JBP | JLD | REVISED AS-BUILT – UPDATED FOR ISVE EXPANSION |
| 2 | 6/10 | PJR | | FOR RECORD DRAWING |
| 1 | 1/20/10 | JN | MUM | FOR PRELIMNARY DESIGN REPORT |

DESIGNED BY: T. ADAMS
DRAWN BY: T. ADAMS
SHEET CHK'D BY: G. MESSIH
CROSS CHK'D BY: J. BAMER
APPROVED BY: G. MESSIH
DATE: JULY 2013

CDM Smith
111 Academy Way, Suite 150
Irvine, California, 92617
Tel: (949) 752-5452

OMEGA CHEMICAL SUPERFUND SITE
12504 / 12512 EAST WHITTIER BOULEVARD
12471 WASHINGTON BOULEVARD
WHITTIER, CALIFORNIA

RISER DIAGRAM, LOAD COMPUTATION, AND CONDUIT AND WIRE LEGEND - PLANT 1

PROJECT NO. 10500-97768
FILE NAME: E-2
SHEET NO.
E-2

C:\cdmxm\riehlepj\d1257128\ E-2 05/10/13 13:38 riehlepj XREFS: PRELIM NOT FOR CONST, CDMS_2234-FULL SVE, CA-Ravi-S-2013
© 2012 CDM SMITH ALL RIGHTS RESERVED.
REUSE OF DOCUMENTS: THESE DOCUMENTS AND DESIGNS PROVIDED BY PROFESSIONAL SERVICE, INCORPORATED HEREIN, ARE THE PROPERTY OF CDM SMITH AND ARE NOT TO BE USED, IN WHOLE OR PART, FOR ANY OTHER PROJECT WITHOUT THE WRITTEN AUTHORIZATION OF CDM SMITH.

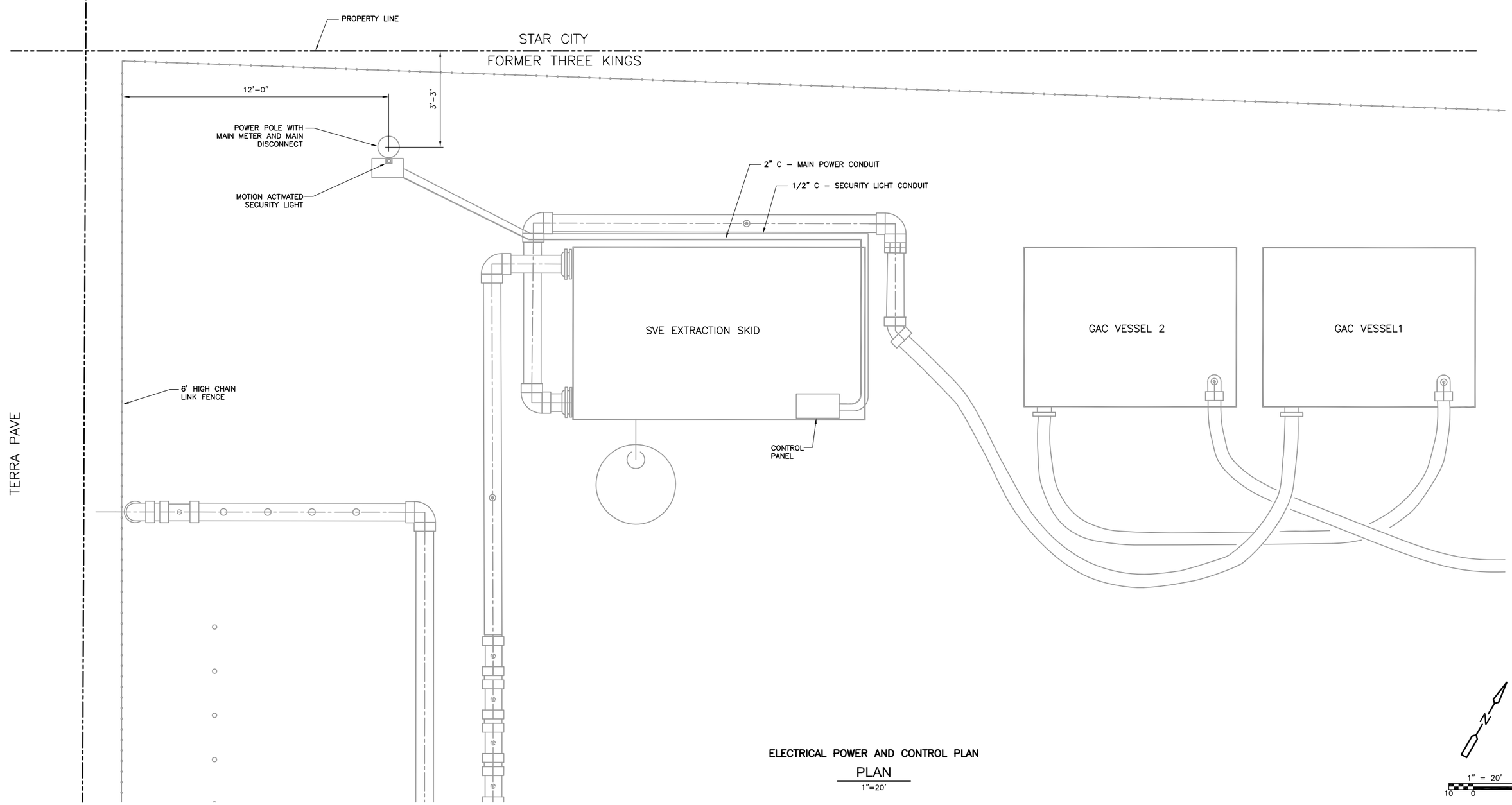


ELECTRICAL POWER AND CONTROL PLAN

PLAN

1"=20'

**PRELIMINARY DESIGN**
**NOT FOR CONSTRUCTION**

REGISTERED PROFESSIONAL ENGINEER
GAMIL NICOLA ABDEL-MESSIH
No. E 9902
Exp. 06/30/2015
ELECTRICAL
STATE OF CALIFORNIA

| REV. NO. | DATE | DRWN | CHKD | REMARKS |
|---|---|---|---|---|
| 6 | 5/17/13 | TCA | GM | REVISED FOR PDR SUBMITTAL |
| 5 | 10/24/12 | PJR | JTB | PDR SUBMITTAL |
| 4 | 5/11 | JBP | JLD | REVISED AS-BUILT – UPDATED FOR ISVE EXPANSION |
| 3 | 11/10 | MAR | VTB | FOR RECORD DRAWING |
| 2 | 6/10 | PJR | | FOR RECORD DRAWING |
| 1 | 1/20/10 | JN | MUM | FOR PRELIMINARY DESIGN REPORT |

DESIGNED BY: T.ADAMS
DRAWN BY: T. ADAMS
SHEET CHK'D BY: G. MESSIH
CROSS CHK'D BY: J. BAMER
APPROVED BY: G. MESSIH
DATE: JULY 2013

CDM Smith
111 Academy Way, Suite 150
Irvine, California, 92617
Tel: (949) 752-5452

OMEGA CHEMICAL SUPERFUND SITE
12504 / 12512 EAST WHITTIER BOULEVARD
12471 WASHINGTON BOULEVARD
WHITTIER, CALIFORNIA

ELECTRICAL POWER AND CONTROL PLAN - PLANT 1

PROJECT NO. 10500-97768
FILE NAME: E-3
SHEET NO.
E-3

C:\cdmxm\riehlepj\d1257128\ E-3 05/14/13 14:47 riehlepj XREFS: PRELIM NOT FOR CONST, SVE-00001PL-NEW, cutil000, SVE-cwpl0000, CDMS_2234-FULL SVE, CA-Ravi-S-2013
© 2012 CDM SMITH ALL RIGHTS RESERVED.
REUSE OF DOCUMENTS: THESE DOCUMENTS AND DESIGNS PROVIDED BY PROFESSIONAL SERVICE, INCORPORATED HEREIN, ARE THE PROPERTY OF CDM SMITH AND ARE NOT TO BE USED, IN WHOLE OR PART, FOR ANY OTHER PROJECT WITHOUT THE WRITTEN AUTHORIZATION OF CDM SMITH.

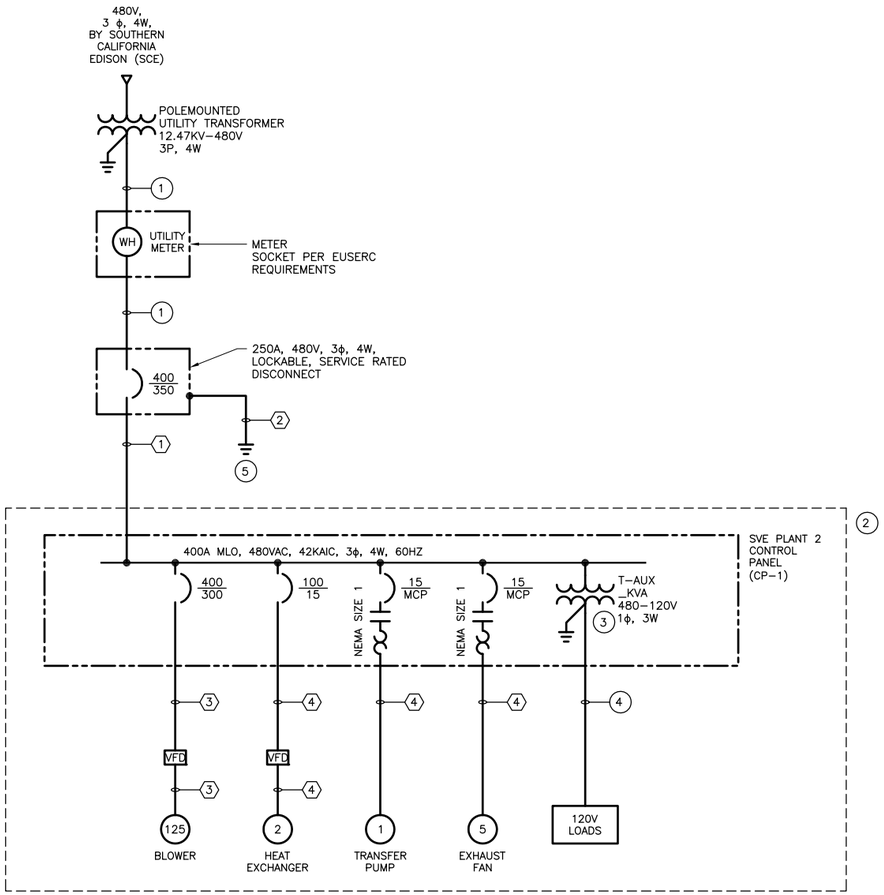


**PLANT 2 – SOIL VAPOR EXTRACTION SYSTEM**

SINGLE LINE DIAGRAM

N.T.S.

KEYED NOTES:

1. PRIMARY CONDUCTORS PROVIDED BY SOUTHERN CALIFORNIA EDISON (SCE).
2. VENDOR PROVIDED EQUIPMENT.
3. AUXILLIARY TRANSFORMER (T–AUX) SHALL BE SIZED BY THE SKID VENDOR FOR THE PROVIDED 120V LOADS.
4. CONDUIT AND WIRE FOR THE 120V LOADS SHALL BE PROVIDED BY THE SKID VENDOR AND SIZED ACCORDING TO NEC REQUIREMENTS. CURRENT 120V LOADS ARE ESTIMATED. FINAL 120V LOADS WILL BE CONFIRMED BY THE VENDOR.
5. PROVIDE 5/8" X 8' GROUND ROD.

CONDUIT AND WIRE LEGEND
(NUMBERS REFERENCE THIS SHEET ONLY)

| NO. | DESCRIPTION |
|---|---|
| 1 | 4"C, 4#350KCMIL, 1#3 GND |
| 2 | #4 BARE CU |
| 3 | 4"C, 3#350KCMIL, 1#4 GND |
| 4 | 3/4"C, 3#12, 1#12 GND |

LOAD COMPUTATION AT 480V LEVEL

| LOADS | HP/KVA | AMPERE |
|---|---|---|
| MAIN BLOWER | 125HP | 156 |
| TRANSFER PUMP | 1HP | 2.1 |
| HEAT EXCHANGER | 2HP | 3.4 |
| EXHAUST FAN | 5HP | 7.6 |
| SUBTOTAL AMPERE | | 169.10 |
| 25% LARGEST MOTOR | | 39.00 |
| TOTAL CONNECT LOAD AMPERE | | 208.1 |

**PRELIMINARY DESIGN**
**NOT FOR CONSTRUCTION**

REGISTERED PROFESSIONAL ENGINEER
OMAR NICOLA ABDEL-MESSIH
No. E 9902
Exp. 06/30/2015
ELECTRICAL
STATE OF CALIFORNIA

| REV. NO. | DATE | DRWN | CHKD | REMARKS |
|---|---|---|---|---|
| 2 | 5/17/13 | TCA | GM | REVISED FOR PDR SUBMITTAL |
| 1 | 10/24/12 | PJR | JTB | PDR SUBMITTAL |

DESIGNED BY: T. ADAMS
DRAWN BY: T. ADAMS
SHEET CHK'D BY: G. MESSIH
CROSS CHK'D BY: J. BAMER
APPROVED BY: G. MESSIH
DATE: JULY 2013

CDM Smith
111 Academy Way, Suite 150
Irvine, California, 92617
Tel: (949) 752-5452

OMEGA CHEMICAL SUPERFUND SITE
12504 / 12512 EAST WHITTIER BOULEVARD
12471 WASHINGTON BOULEVARD
WHITTIER, CALIFORNIA

RISER DIAGRAM, LOAD COMPUTATION AND CONDUIT AND WIRE LEGEND - PLANT 2

PROJECT NO. 10500–97768
FILE NAME: E–4
SHEET NO.
E-4

C:\cdmxm\riehlepj\d1257128\ E-4 05/14/13 14:49 riehlepj XREFS: PRELIM NOT FOR CONST, CDMS_2234-FULL SVE, CA-Ravi-S-2013
© 2012 CDM SMITH ALL RIGHTS RESERVED.
REUSE OF DOCUMENTS: THESE DOCUMENTS AND DESIGNS PROVIDED BY PROFESSIONAL SERVICE, INCORPORATED HEREIN, ARE THE PROPERTY OF CDM SMITH AND ARE NOT TO BE USED, IN WHOLE OR PART, FOR ANY OTHER PROJECT WITHOUT THE WRITTEN AUTHORIZATION OF CDM SMITH.

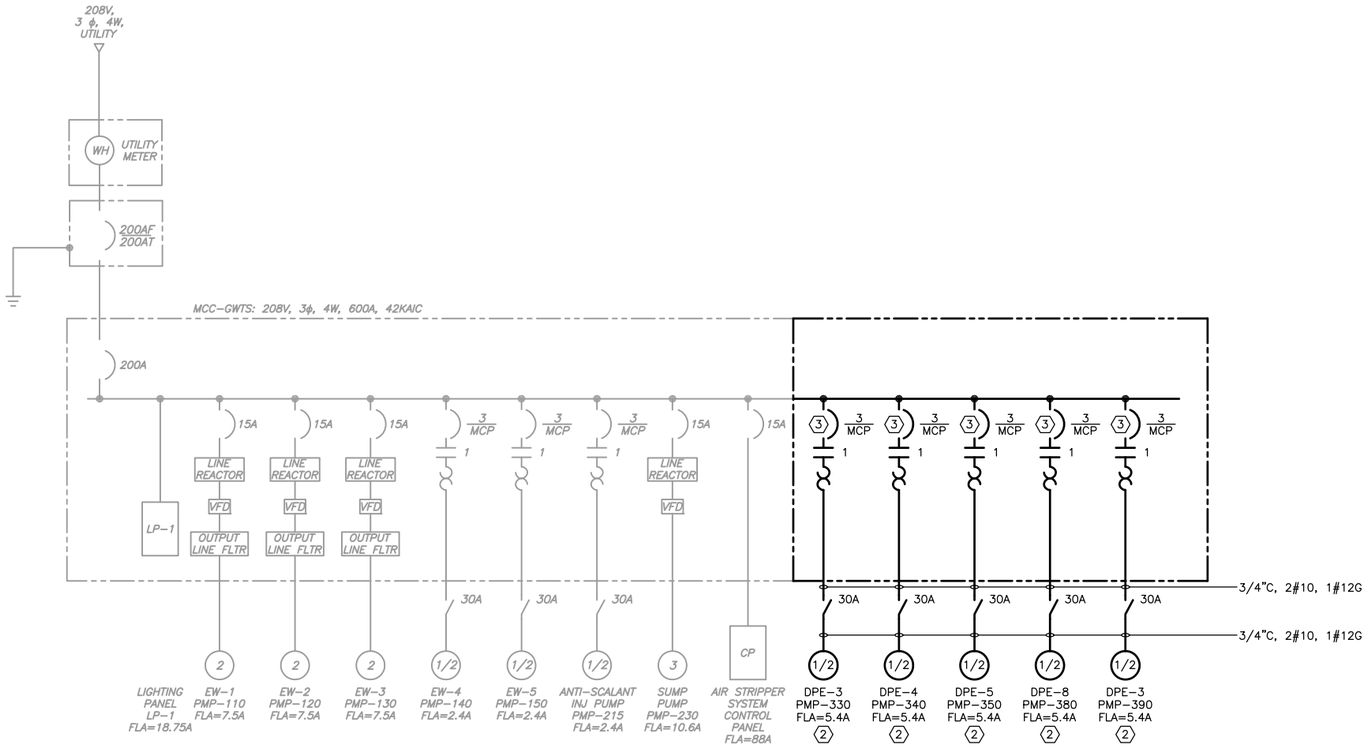


**EXISTING MOTOR CONTROL CENTER (MCC–GWTS) MODIFICATIONS**

## SINGLE LINE DIAGRAM

N.T.S.

KEYED NOTES:

1. EXTEND EXISTING MCC HOUSEKEEPING PAD 40" FOR ADDITION OF 2 NEW 20" MCC SECTIONS. MAINTAIN 4" PAD OFFSET FROM NEW EQUIPMENT SECTIONS.
2. NEW DPE PUMPS WILL BE 208V, 1ϕ. REFER TO WELL PUMPS EW–4 & EW–5 SCHEMATIC LOCATED ON SHEET E–7 OF THE GROUNDWATER TREATMENT PLANT RECORD DRAWINGS FOR DETAILS. EXISTING SCHEMATIC IS TYPICAL FOR DPE PUMPS 3, 4, 5, 8 AND 9 WITH THE EXCEPTION THAT THE PUMP MOTORS SHALL BE WIRED FOR A 208V, 1ϕ CONNECTION.
3. MOTOR CIRCUIT PROTECTORS (MCP) SHALL BE 208V, 3ϕ. CONTRACTOR SHALL BALANCE NEW DPE PUMP MOTOR LOADS EVENLY ACROSS ALL PHASES.

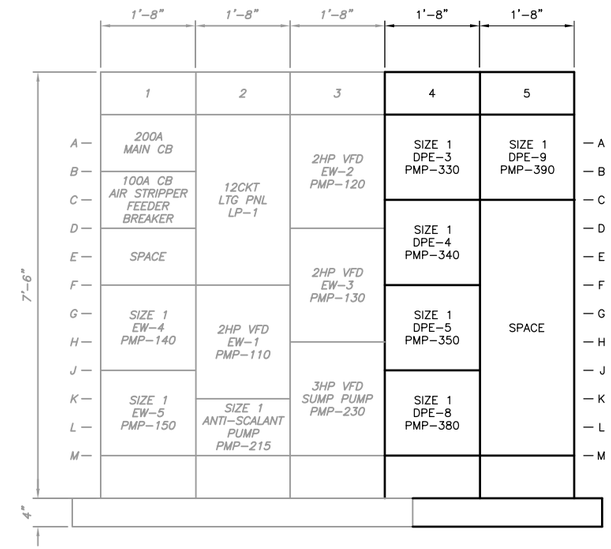


**EXISTING MOTOR CONTROL CENTER (MCC–GWTS) MODIFICATIONS 1**

## ELEVATION

NTS

| | | | | | | | | | | | | | | | | | |
|---|---|---|---|---|---|---|---|---|---|---|---|---|---|---|---|---|---|
| 30 | AMP MAIN BREAKER | | | | PANELBOARD LP-1 | | | | | | | | | LOCATION: | INSIDE MCC-GWTS | | |
| 100 | AMP BUS RATING | | 12 | POLES | | | 42 | KA SHORT CIRCUIT RATING | | | | | | ENCLOSURE RATING: | NEMA 1 | | |
| 208/120 | VOLTS | 3 | PHASE | 4 | WIRE | 60 Hz. | | | | | ELECTRONIC GRADE: | NO | | MOUNTING: | RECESS | | |

| CIRCUIT NO. | DESCRIPTION | PHASE A | PHASE B | PHASE C | BREAKER AMPS/ POLES | | NOTES | CIRCUIT NO. | DESCRIPTION | PHASE A | PHASE B | PHASE C | BREAKER AMPS/ POLES | | NOTES |
|---|---|---|---|---|---|---|---|---|---|---|---|---|---|---|---|
| 1 | PLC PANEL | 2 | | | 20 | /1 | | 2 | RECEPTACLES | 0.36 | | | 20 | /1 | |
| 3 | LIGHTS | | 1 | | 20 | /1 | | 4 | RECEPTACLES | | 0.54 | | 20 | /1 | |
| 5 | SPARE | | | | 20 | /1 | | 6 | SPARE | | | | 20 | /1 | |
| 7 | SPARE | | | | 20 | /1 | | 8 | SPARE | | | | 20 | /1 | |
| 9 | SPARE | | | | 20 | /1 | | 10 | SPARE | | | | 20 | /1 | |
| 11 | SPARE | | | | 20 | /1 | | 12 | SPARE | | | | 20 | /1 | |
| | TOTAL PHASE KVA THIS SIDE | 2 | 1 | 0 | | | | | TOTAL PHASE KVA THIS SIDE | 0.36 | 0.54 | 0 | | | |
| | | | | | | | | | TOTAL KVA PER PHASE | 2.36 | 1.54 | 0 | | | |
| | | | | | | | | | TOTAL THREE PHASE KVA | | 3.9 | | | | |

NOTES:
1. PROVIDE LOCKING HARDWARE
3. 30 ma GFI CIRCUIT BREAKER FOR EQUIPMENT PROTECTION ONLY (HEAT TRACE)
5. BRANCH CIRCUIT WIRING: 3/4"C, 3#12 & 1#12G
7. BRANCH CIRCUIT WIRING: 3/4"C, 2#12 & 1#12G

NOTES CONT.:
2. 5 ma GROUND FAULT INTERRUPTER (GFI) CIRCUIT BREAKER
4. PROVIDE LOCKING HARDWARE & PAINT BREAKER HANDLE RED (FACP)
6. BRANCH CIRCUIT WIRING: 3/4"C, 3#10 & 1#12G
8.

**EXISTING PANELBOARD (LP–1) MODIFICATIONS**

## SCHEDULE

N.T.S.

LOAD COMPUTATION AT 208V LEVEL

| LOADS | HP/KVA | PHASES | AMPERE |
|---|---|---|---|
| EW–1 | 2HP | 3 | 7.5 |
| EW–2 | 2HP | 3 | 7.5 |
| EW–3 | 2HP | 3 | 7.5 |
| EW–4 | 1/2HP | 3 | 2.4 |
| EW–5 | 1/2HP | 3 | 2.4 |
| PMP–215 | 1/2HP | 3 | 2.4 |
| PMP–230 | 3HP | 3 | 10.6 |
| AIR STRIPPER SYSTEM | – | 3 | 88 |
| PANELBOARD LP–1 | – | 3 | 18.75 |
| DPE–3 | 1/2HP | 1 | 5.4 |
| DPE–4 | 1/2HP | 1 | 5.4 |
| DPE–5 | 1/2HP | 1 | 5.4 |
| DPE–8 | 1/2HP | 1 | 5.4 |
| DPE–9 | 1/2HP | 1 | 5.4 |
| SUBTOTAL AMPERE | | | 174.05 |
| 25% LARGEST MOTOR | | | 2.65 |
| TOTAL CONNECT LOAD AMPERE | | | 176.70 |

**PRELIMINARY DESIGN NOT FOR CONSTRUCTION**

REGISTERED PROFESSIONAL ENGINEER
CARL NICOLA ABEL-MESSIH
No. E 9902
Exp. 06/30/2015
ELECTRICAL
STATE OF CALIFORNIA

| REV. NO. | DATE | DRWN | CHKD | REMARKS |
|---|---|---|---|---|

DESIGNED BY: T. ADAMS
DRAWN BY: T. ADAMS
SHEET CHK'D BY: G. MESSIH
CROSS CHK'D BY: J. BAMER
APPROVED BY: G. MESSIH
DATE: JULY 2013

CDM Smith
111 Academy Way, Suite 150
Irvine, California, 92617
Tel: (949) 752-5452

OMEGA CHEMICAL SUPERFUND SITE
12504 / 12512 EAST WHITTIER BOULEVARD
12471 WASHINGTON BOULEVARD
WHITTIER, CALIFORNIA

EXISTING MOTOR CONTROL CENTER
MCC-GWTS MODIFICATIONS
SINGLE-LINE/ELEVATION

PROJECT NO. 10500–97768
FILE NAME: E–5
SHEET NO.
E-5

C:\cdmxm\riehlepj\d1257128\ E-4 05/14/13 14:49 riehlepj XREFS: PRELIM NOT FOR CONST, CDMS_2234-FULL SVE, CA-Ravi-S-2013
© 2012 CDM SMITH ALL RIGHTS RESERVED.
REUSE OF DOCUMENTS: THESE DOCUMENTS AND DESIGNS PROVIDED BY PROFESSIONAL SERVICE, INCORPORATED HEREIN, ARE THE PROPERTY OF CDM SMITH AND ARE NOT TO BE USED, IN WHOLE OR PART, FOR ANY OTHER PROJECT WITHOUT THE WRITTEN AUTHORIZATION OF CDM SMITH.

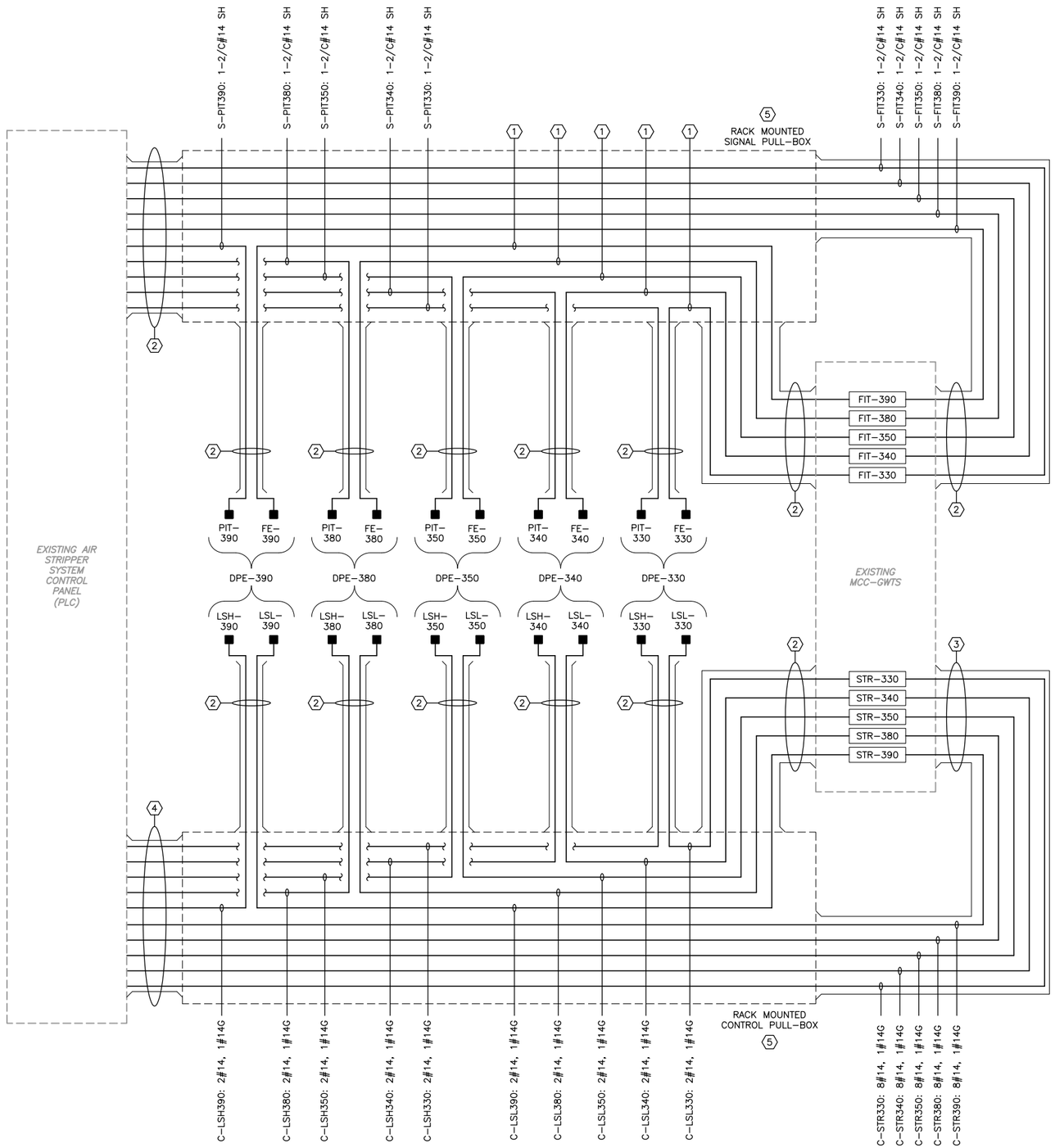


KEYED NOTES:

1. MANUFACTURER RECOMMENDED CABLE.
2. COMBINE IN 1" PVC DIRECT-BURIED CONDUIT.
3. COMBINE IN 1-1/2" PVC DIRECT-BURIED CONDUIT.
4. COMBINE IN 2" PVC DIRECT-BURIED CONDUIT.
5. RACK MOUNTED NEMA 3R PULL BOX.

**PRELIMINARY DESIGN**
**NOT FOR CONSTRUCTION**

REGISTERED PROFESSIONAL ENGINEER
GAMIL NIDZA ABEL-MESSIH
No. E 9902
Exp. 06/30/2015
ELECTRICAL
STATE OF CALIFORNIA

| REV. NO. | DATE | DRWN | CHKD | REMARKS |
|---|---|---|---|---|
| | | | | |

DESIGNED BY: T. ADAMS
DRAWN BY: T. ADAMS
SHEET CHK'D BY: G. MESSIH
CROSS CHK'D BY: J. BAMER
APPROVED BY: G. MESSIH
DATE: JULY 2013

CDM Smith
111 Academy Way, Suite 150
Irvine, California, 92617
Tel: (949) 752-5452

OMEGA CHEMICAL SUPERFUND SITE
12504 / 12512 EAST WHITTIER BOULEVARD
12471 WASHINGTON BOULEVARD
WHITTIER, CALIFORNIA

GWTS - NEW DPE PUMP
CONTROL BLOCK DIAGRAM

PROJECT NO. 10500-97768
FILE NAME: E-6
SHEET NO.
E-6

C:\cdmxm\riehlepj\d1257128\ E-4 05/14/13 14:49 riehlepj XREFS: PRELIM NOT FOR CONST, CDMS_2234-FULL SVE, CA-Ravi-S-2013
© 2012 CDM SMITH ALL RIGHTS RESERVED.
REUSE OF DOCUMENTS: THESE DOCUMENTS AND DESIGNS PROVIDED BY PROFESSIONAL SERVICE, INCORPORATED HEREIN, ARE THE PROPERTY OF CDM SMITH AND ARE NOT TO BE USED, IN WHOLE OR PART, FOR ANY OTHER PROJECT WITHOUT THE WRITTEN AUTHORIZATION OF CDM SMITH.

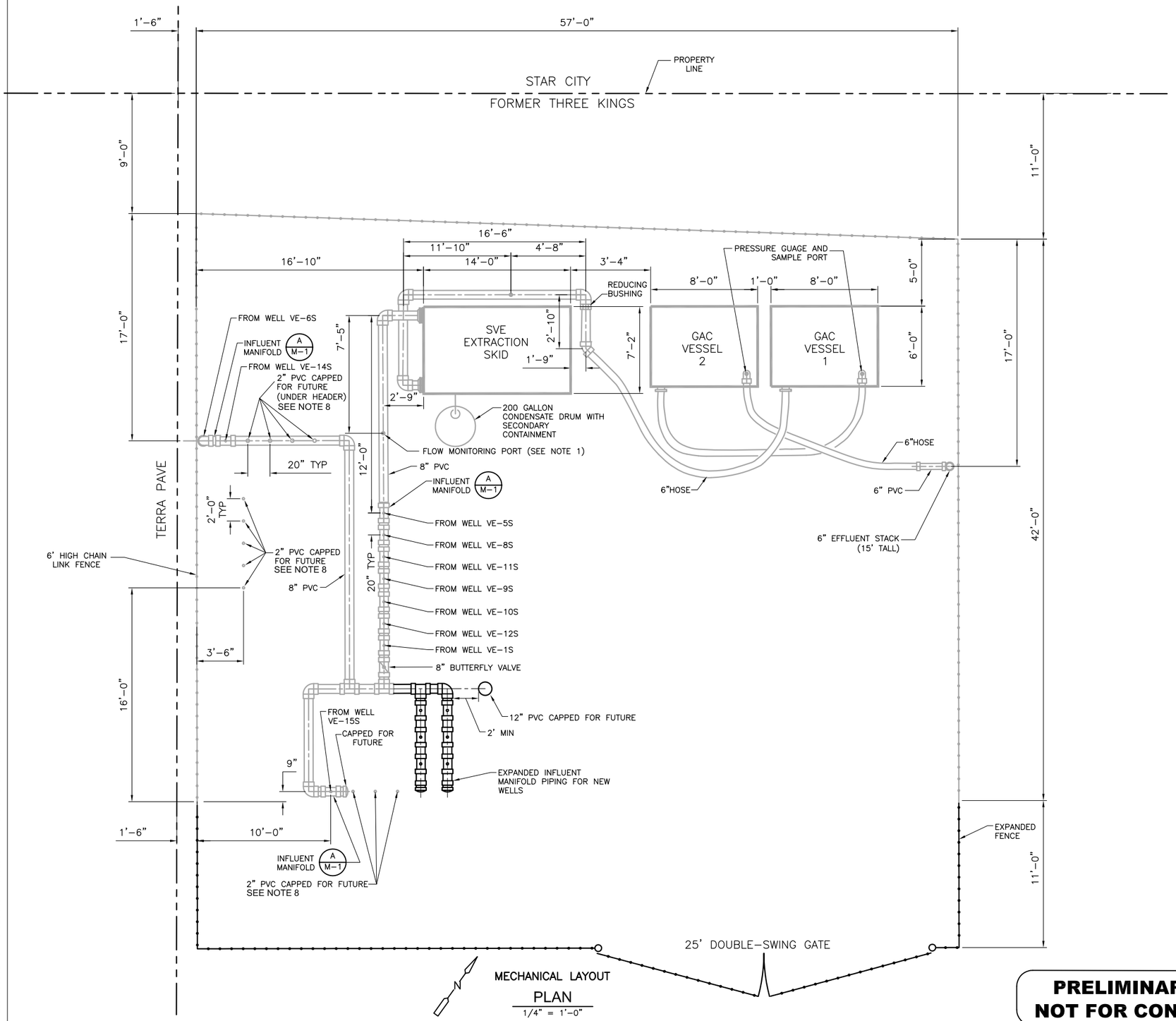


MECHANICAL LAYOUT

PLAN

1/4" = 1'-0"

**LEGEND:**

ABOVEGROUND PROCESS PIPING

**NOTES:**

1. ALL PORTS FOR FLOW MONITORING SHALL BE LOCATED ALONG A STRAIGHT SECTION OF PIPE WITH NO FITTINGS, BENDS, OR OTHER CHANGES WITHIN 10 PIPE DIAMETERS UPSTREAM PF THE PORT, AND WITHIN 5 PIPE DIAMETERS DOWNSTREAM OF THE PORT.
2. ALL ABOVE GROUND PVC PIPING SHALL BE PAINTED FOR UV PROTECTION.
3. EFFLUENT STACK SHALL BE SUPPORTED.
4. ALL INFLUENT MANIFOLD COMPONENTS (FLOW MEASUREMENT PORT, TEE WITH VACUUM GAUGE, AND BALL VALVE) SHALL BE INSTALLED ON VERTICAL PIPING UNDRNEATH MANIFOLD HEADER.
5. FUTURE LINES SHALL BE STUBBED AND CAPPED.
6. PROPERLY SECURE ALL EQUIPMENT TO THE EXISTING SURFACE.
7. CONTRACTOR SHALL FIELD ROUTE SVE CONVEYANCE AROUND EXISTING PIPING AND OTHER INFRASTRUCTURE TO ACHIEVE CONNECTIONS SHOWN. SPARE LINES SHALL BE CONNECTED TO THE MANIFOLD BUT VALVED CLOSED.
8. CONTRACTOR SHALL DETERMINE WHICH EXISTING SPARE LINES TERMINATE AT VE-11S AND NEAR VE-8S. THESE SPARE LINES SHALL BE CONNECTED TO VE-11S, VE-8S, AND VE-2D AS SHOWN ON THE P&ID, AND CONNECTED TO THE INFLUENT MANIFOLD.
9. ALL ABOVE GROUND PIPING SHALL BE SUPPORTED BY THE GROUND SURFACE AND/OR ATTACHED TO UNISTRUT (OR EQUIVALENT) SUPPORTS. SPACING BETWEEN PIPE SUPPORTS SHALL BE IN ACCORDANCE WITH MANUFACTURER'S RECOMMENDATIONS.

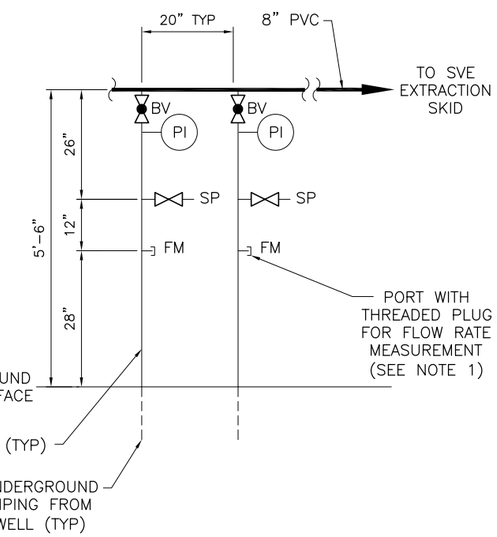


TYPICAL MANIFOLD PIPING SCHEMATIC

DETAIL A M-1

NTS

LEGEND:

BV – BALL VALVE
PI – PRESSURE INDICATOR (VACUUM OR PRESSURE)
SP – SAMPLE PORT
FM – FLOW MONITORING PORT

CALL BEFORE YOU DIG:
UNDERGROUND SERVICE ALERT OF SOUTHERN CALIFORNIA
TWO WORKING DAYS BEFORE YOU DIG
1-800-227-2600

**PRELIMINARY DESIGN NOT FOR CONSTRUCTION**

REGISTERED PROFESSIONAL ENGINEER RAVI SUBRAMANIAN No. C053679 Exp. 06-30-2015 CIVIL STATE OF CALIFORNIA

| REV. NO. | DATE | DRWN | CHKD | REMARKS |
|---|---|---|---|---|
| 6 | 7-12-13 | PJR | NLS | REVISED FOR PDR SUBMITTAL |
| 5 | 10/24/12 | PJR | JTB | PDR SUBMITTAL |
| 4 | 5/11 | JBP | JLD | REVISED AS-BUILT – UPDATED FOR ISVE EXPANSION |
| 3 | 11/10 | MAR | VTB | FOR RECORD DRAWING |
| 2 | 6/10 | PJR | | FOR RECORD DRAWING |
| 1 | 1/20/10 | PJR | HC | FOR PRELIMINARY DESIGN REPORT |

DESIGNED BY: NLS
DRAWN BY: MAR
SHEET CHK'D BY: NLS
CROSS CHK'D BY: JTB
APPROVED BY: RS
DATE: JULY 2013

CDM Smith
111 Academy Way, Suite 150
Irvine, California, 92617
Tel: (949) 752-5452

OMEGA CHEMICAL SUPERFUND SITE
12504 / 12512 EAST WHITTIER BOULEVARD
12471 WASHINGTON BOULEVARD
WHITTIER, CALIFORNIA

MECHANICAL
PLAN - PLANT 1

PROJECT NO. 10500-97768
FILE NAME:
SHEET NO.
M-1

C:\cdmxm\riehlep\d1257128\ M-1 07/23/13 11:35 riehlep XREFS: SVE-00001PL-NEW, PRELIM NOT FOR CONST, CDMS_2234-FULL SVE, CA-Ravi-S-2015
©2012 CDM SMITH ALL RIGHTS RESERVED.
REUSE OF DOCUMENTS: THESE DOCUMENTS AND DESIGNS PROVIDED BY PROFESSIONAL SERVICE, INCORPORATED HEREIN, ARE THE PROPERTY OF CDM SMITH. THEY ARE NOT TO BE USED, IN WHOLE OR PART, FOR ANY OTHER PROJECT WITHOUT THE WRITTEN AUTHORIZATION OF CDM SMITH.

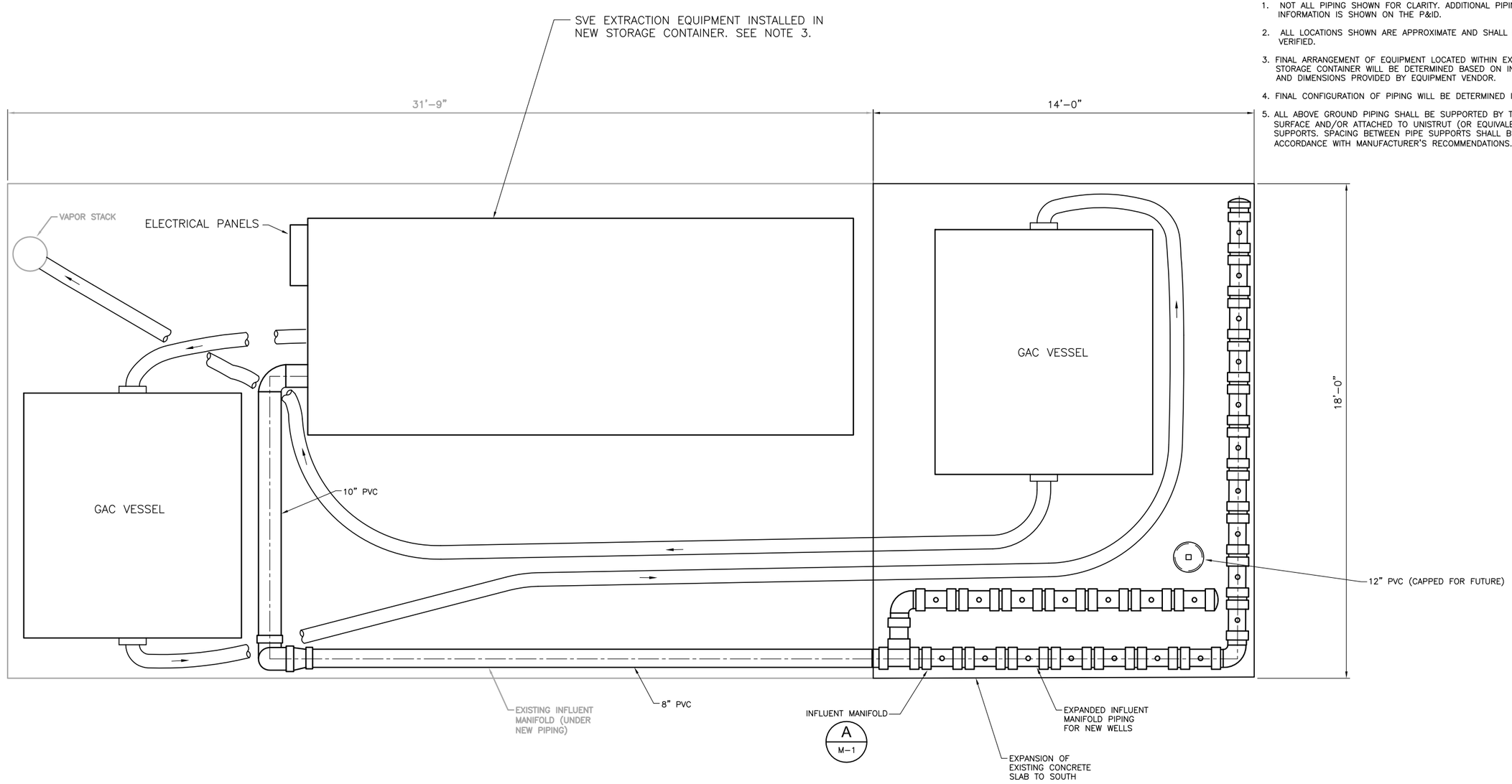


PRELIMINARY LAYOUT

PLAN

1/2"= 1'-0"

**NOTES:**

1. NOT ALL PIPING SHOWN FOR CLARITY. ADDITIONAL PIPING INFORMATION IS SHOWN ON THE P&ID.
2. ALL LOCATIONS SHOWN ARE APPROXIMATE AND SHALL BE FIELD VERIFIED.
3. FINAL ARRANGEMENT OF EQUIPMENT LOCATED WITHIN EXISTING STORAGE CONTAINER WILL BE DETERMINED BASED ON INFORMATION AND DIMENSIONS PROVIDED BY EQUIPMENT VENDOR.
4. FINAL CONFIGURATION OF PIPING WILL BE DETERMINED IN THE FIELD.
5. ALL ABOVE GROUND PIPING SHALL BE SUPPORTED BY THE GROUND SURFACE AND/OR ATTACHED TO UNISTRUT (OR EQUIVALENT) SUPPORTS. SPACING BETWEEN PIPE SUPPORTS SHALL BE IN ACCORDANCE WITH MANUFACTURER'S RECOMMENDATIONS.

**PRELIMINARY DESIGN**
**NOT FOR CONSTRUCTION**

CALL BEFORE YOU DIG:
UNDERGROUND SERVICE ALERT OF
SOUTHERN CALIFORNIA
TWO WORKING DAYS BEFORE YOU DIG
1-800-227-2600

REGISTERED PROFESSIONAL ENGINEER
RAVI SUBRAMANIAN
No. C053679
Exp. 06-30-2015
CIVIL
STATE OF CALIFORNIA

| REV. NO. | DATE | DRWN | CHKD | REMARKS |
|---|---|---|---|---|
| 2 | 7-31-13 | PJR | NLS | REVISED FOR PDR SUBMITTAL |
| 1 | 10/24/12 | MAR | JTB | PDR SUBMITTAL |

DESIGNED BY: NLS
DRAWN BY: MAR
SHEET CHK'D BY: NLS
CROSS CHK'D BY: JTB
APPROVED BY: RS
DATE: JULY 2013

CDM Smith
111 Academy Way, Suite 150
Irvine, California, 92617
Tel: (949) 752-5452

OMEGA CHEMICAL SUPERFUND SITE
12504 / 12512 EAST WHITTIER BOULEVARD
12471 WASHINGTON BOULEVARD
WHITTIER, CALIFORNIA

MECHANICAL
PLAN - PLANT 2

PROJECT NO. 10500-97768
FILE NAME:
SHEET NO.
M-2

C:\cdmxm\riehlepj\d1257128\ M-2 07/09/13 08:38 riehlepj XREFS: CDMS_2234-FULL SVE, CA-Ravi-S-2013, PRELIM NOT FOR CONST
© 2012 CDM SMITH ALL RIGHTS RESERVED.
REUSE OF DOCUMENTS: THESE DOCUMENTS AND DESIGNS PROVIDED BY PROFESSIONAL SERVICE, INCORPORATED HEREIN, ARE THE PROPERTY OF CDM SMITH AND ARE NOT TO BE USED, IN WHOLE OR PART, FOR ANY OTHER PROJECT WITHOUT THE WRITTEN AUTHORIZATION OF CDM SMITH.

# PIPING LEGEND

## MATERIAL CODES

| | |
|---|---|
| FRP | 150 psi PRESSURE CLASS FIBERGLASS REINFORCED PLASTIC PIPE |
| HDPE | 150 psi PRESSURE CLASS HIGH DENSITY POLYETHYLENE PIPE |
| PVC | PVC–SCHEDULE 40 (WELLFIELD) AND 80 (PLANT) |
| PVC/D | PVC GRAVITY SEWER PIPE |
| CU | COPPER TUBING |
| CPVC | SCHEDULE 80 CPVC PIPE |
| EPDM | EPDM TUBING |
| C20 | SCHEDULE 40 CARPENTER 20 ALLOY PIPE |
| 304SS | TYPE 304/304L STAINLESS STEEL PIPE |
| 316SS | TYPE 316/316L STAINLESS STEEL PIPE |
| PVDF | 230 psi PRESSURE CLASS PVDF PIPE |
| PP | 150 psi PRESSURE CLASS POLYPROPYLENE PIPE |
| STL/L | SCH 40 STEEL PIPE, LINED |
| DIP | DUCTILE IRON PIPE |
| CMLSP | CEMENT MORTAR–LINED STEEL PIPE |
| ABS | ACRYLONITRILE BUTADIENE STYRENE |

## OPERATING FLUID CODE

| | | | |
|---|---|---|---|
| AA | ACETIC ACID | LPA | LOW PRESSURE AIR |
| BD | BLOWDOWN | LPDG | LOW PRESSURE DIGESTER GAS |
| BS | BOTTOM SLUDGE | LO | LUBE OIL |
| BYP | BYPASS | MA | MURIATIC ACID |
| C | CHILLED WATER | NAOH | SODIUM HYDROXIDE (CAUSTIC SOLUTION) |
| CHEMD | CHEMICAL DRAIN | NG | NATURAL GAS |
| CND | CONDENSER | OF | OVERFLOW |
| COND | CONDENSATE | O2 | OXYGEN |
| CS | CHLORINE SOLUTION | P | PROPANE |
| CSL | CAUSTIC SOLUTION | PA | PHOSPHORIC ACID |
| CW | CITY WATER | PD | PROCESS DRAIN |
| D | DRAIN | PE | PRIMARY EFFLUENT |
| DC | DIGESTER CLEANING | PI | PRIMARY INFLUENT |
| DISCH | DISCHARGE | POL | POLYMER |
| DG | DIGESTER GAS | POTW | POTABLE WATER |
| EGW | EXTRACTED GROUNDWATER | PS | PRIMARY SLUDGE |
| FA | FOUL AIR | PV | PROCESS VAPOR |
| FD | FLOOR DRAIN | PW | PLANT WATER |
| FECL2 | FERROUS CHLORIDE | RD | ROOF DRAIN |
| FECL3 | FERRIC CHLORIDE | RS | RAW SEWAGE |
| FM | FORCE MAIN | RAS | RETURN ACTIVATED SLUDGE |
| FO | FUEL OIL | REC | RECIRCULATION |
| FSW | FIRE SUPPLY WATER | RW | RECLAIMED WATER |
| FW | FEED WATER | S | SCUM |
| GR | GRIT | SAM | SAMPLE |
| HCL | HYDROCHLORIC ACID | SEW | SEWER |
| HPA | HIGH PRESSURE AIR | SC | SLUDGE CAKE |
| HPDG | HIGH PRESSURE DIGESTER GAS | SD | SANITARY DRAIN |
| HPNG | HIGH PRESSURE NATURAL GAS | SE | SECONDARY EFFLUENT |
| HPW | HIGH PRESSURE WATER | SI | SECONDARY INFLUENT |
| HW | HOT WATER | SN | SUPERNATANT |
| HWR | HOT WATER RETURN | SO | SLOP OIL |
| HWS | HOW WATER SUPPLY | SOD | SLOP OIL DRAIN |
| HYPO | SODIUM HYPOCHLORITE | SPD | SUMP PUMP DISCHARGE |
| H2O2 | HYDROGEN PEROXIDE | SS | SANITARY SEWER |
| IA | INSTRUMENT AIR | STRM | STORM DRAIN |
| IRRIG | IRRIGATION | SV | SOIL VAPOR |
| IRW | IRRIGATION WATER | SW | SEAL WATER |
| IW | INDUSTRIAL WATER | SWR | SOFTENED WATER |
| JWR | JACKET WATER RETURN | TW | TREATED WATER |
| JWS | JACKET WATER SUPPLY | V | VENT |
| JOS | JOINT OUTFALL SEWER | | |

## PIPE LINE TAGGING

SINGLE WALL: 24"–WAS–SS
(24" = PIPE SIZE IN INCHES; WAS = PROCESS FLUID; SS = PIPE MATERIAL — (SEE LEGEND THIS SHEET))

PROCESS PIPING — DUAL WALL: 3"(4")–WAS–SS(SS)
(3" = INSIDE PIPE IN INCHES; 4" = OUTSIDE PIPE; WAS = FLUID; SS = INSIDE PIPE MATERIAL; SS = OUTSIDE PIPE)

## PIPE FITTINGS AND CONNECTORS

- BLIND FLANGE
- UNION
- Y–STRAINER
- CONCENTRIC REDUCER/ENLARGER (RED)
- ECCENTRIC REDUCER/ENLARGER
- PIPE EXTENDING PERPENDICULAR FROM VIEWER
- PIPE EXTENDING PERPENDICULAR TO VIEWER
- FLEXIBLE PIPE CONNECTOR (*)
- FLANGED JOINT
- QUICK CONNECTION
- THREADED CONNECTION W/CAP
- DOUBLE WALLED PIPE
- CONTINUED PIPE
- RESTRAIN ALL JOINTS UNLESS NOTED
- CAMLOCK CONNECTION

# VALVE LEGEND

## VALVE ACTUATION

FAILURE POSITION:
FO = FAIL OPEN
FC = FAIL CLOSED
FLP = FAIL LAST POSITION

- M — MOTOR ACTUATOR
- S — SOLENOID ACTUATOR
- P — PNEUMATIC ACTUATOR
- PNEUMATIC ACTUATOR
- DIAPHRAGM

## VALVE AND GATES SYMBOLS

VALVE POSITION:
NC = NORMALLY CLOSED
NO = NORMALLY OPEN

- HAND CONTROL VALVE
- ANGLE VALVE
- 3–WAY VALVE
- BALL CHECK VALVE
- BALL VALVE (TRUE–UNION ONLY)
- 3–WAY BALL VALVE
- 4–WAY BALL VALVE
- BUTTERFLY VALVE
- CHECK VALVE
- DUAL DISK CHECK VALVE
- DIAPHRAGM CHECK VALVE
- DIAPHRAGM VALVE
- GATE VALVE
- KNIFE GATE VALVE
- GLOBE VALVE
- NEEDLE VALVE
- PLUG VALVE (PV)
- 3–WAY PLUG VALVE
- 4–WAY PLUG VALVE
- PINCH VALVE
- TELESCOPING VALVE
- ROTARY VALVE
- PRESSURE RELIEF VALVE
- VACUUM RELIEF VALVE
- AIR/VACUUM RELIEF VALVE
- PRESSURE REDUCING VALVE
- REGULATED SIDE PRESSURE REGULATING VALVE OR BACK PRESSURE VALVE OR PRESSURE SUSTAINING VALVE
- BACKFLOW PREVENTER VALVE
- SAMPLE VALVE
- SLEEVE VALVE
- VACUUM BREAKER VALVE
- AIR VENT RELIEF VALVE
- AIR RELIEF VALVE
- FOOT VALVE W/ STRAINER
- COMBINATION AIR/VACCUM RELEASE VALVE
- VACUUM REGULATOR
- FLAP VALVE
- INJECTION VALVE
- SLUICE GATE
- WEIR GATE
- SLIDE GATE

# EQUIPMENT SYMBOLS

- MOTOR
- MOTOR WITH VFD
- CHEMICAL METERING PUMP
- SUBMERSIBLE PUMP
- VERTICAL TURBINE PUMP
- CENTRIFUGAL PUMP
- CENTRIFUGAL BLOWER/FAN
- POSITIVE DISPLACEMENT BLOWER
- AIR COMPRESSOR
- PLUNGER/POSITIVE DISPLACEMENT PUMP
- DOUBLE DISK PUMP
- AIR OPERATED DIAPHRAGM PUMP
- PERISTALTIC PUMP
- GEAR/ROTARY LOBE PUMP
- DIAPHRAGM PUMP
- GRINDER
- PROGRESSIVE CAVITY PUMP
- HOSE PUMP
- BELT CONVEYOR
- SCREW CONVEYOR
- MIXER
- STATIC MIXER
- IN–LINE MOTIONLESS MIXER
- IN–LINE MECHANICAL MIXER
- PULSATION DAMPENER
- AIR INTAKE FILTER
- TANK VENT FILTER
- STRAINER, FILTER OR COALESCER
- FLOW CONDITIONER
- INJECTION QUILL WITH CORPORATION STOP
- SCRUBBER
- BASKET SCREEN
- BAR SCREEN
- AUTO SAMPLER
- FIRE HYDRANT
- VENT
- PULSATION DAMPENER
- DRAIN
- FIRE DEPARTMENT CONNECTION
- DRY PIPE VALVE
- SPRINKER(S)
- WATER MOTOR GONG
- ACCUMULATOR
- SIGHT GLASS
- AUTOMATIC DRIP TRAP
- RUPTURE DISK
- HORN
- BEACON
- DIAPHRAGM SEAL
- FILTER
- SILENCER

# EQUIPMENT ABBREVIATIONS

| | |
|---|---|
| AC | AIR CONDITIONING |
| ADN | ADVANCED DIGITAL NETWORK |
| ARV | AIR RELEASE VALVE |
| BFP | BELT FILTER PRESS |
| BFT | BIOFILTER |
| BFV | BUTTERFLY VALVE |
| BV | BALL VALVE |
| BOL | BOILER |
| BSR | BARSCREEN |
| BWR | BLOWER |
| CB | CATCH BASIN |
| CEN | CENTRIFUGE |
| CLR | SCUM OR SLUDGE COLLECTOR |
| CO | CLEAN OUT |
| CPLG | COUPLING |
| CV | CHECK VALVE |
| CLS | CLASSIFIER |
| CMP | COMPRESSOR |
| CND | CONDENSER |
| CVY | CONVEYOR |
| DIG | DIGESTER |
| DMPR | BACK DRAFT DAMPER |
| DRY | DRYER |
| DV | DIAPHRAGM VALVE |
| EJ | EXPANSION JOINT |
| ENG | ENGINE |
| EVP | EVAPORATOR |
| EXH | EXHAUST |
| EXR | EXCHANGER |
| FAP | FIRE ALARM PANEL |
| FH | FIRE HYDRANT |
| FIL | FILTRATE |
| FL OR FJ | FLANGED JOINT |
| FLR | FLARE |
| FLT | FILTER |
| FLV | FLAPPER VAVLE |
| GAT | GATE |
| GBX | GEARBOX |
| GDR | GRINDER |
| GEN | GENERATOR |
| GLV | GLOBE VALVE |
| GV | GATE VALVE |
| HNDLG | HANDLING |
| HDWKS | HEADWORKS |
| HTR | HEATER |
| IBD | ISOLATION/BALANCE DAMPER |
| INF | INFLUENT |
| JB | JUNCTION BOX |
| LVR | LOUVER |
| MTR | MOTOR |
| MXR | MIXER |
| NV | NEEDLE VALVE |
| OPS | OPERATOR (ACTUATOR) |
| PC | PRIMARY CLARIFIER |
| PD | POSITIVE DISPLACEMENT |
| PIV | PINCH VALVE |
| PV | PLUG VALVE |
| PMP | PUMP |
| PNL | PANEL |
| PRD | PRES REDUCING VALVE |
| PRG | PRES REGULATING VALVE |
| PRV | PRE RELIEF VALVE |
| PRVB | PRES RELIEF/VACUUM BREAKER |
| RPD | REDUCED PRINCIPLE DEVICE |
| RUD | ROLL–UP DOOR |
| SAM | SAMPLE |
| SBR | SCRUBBER |
| SCRNGS | SCREENINGS |
| SFS | SAFETY SHOWER |
| SOF | SOFTENER |
| SP | SAMPLE POINT |
| SPD | SUMP PUMP DISCHARGE |
| SPR | SEPERATOR |
| ST | STEAM |
| STA | STATION |
| STR | STRAINER |
| STRUC | STRUCTURAL |
| SWP | SWEEP ARM ASSEMBLY |
| TEL | TELEPHONE |
| TELCO | TELEPHONE COMPANY |
| TNK | TANK |
| TUB | TUB (ELECTRICAL) |
| TUR | TURBINE |
| TSV | TELESCOPING VALVE |
| VA | VALVE |
| VAC | VACUUM |
| VB | VALVE BOX |
| VFD | VARIABLE FREQUENCY DRIVE |
| VNTV | VENT VALVE |
| VKG | KNIFE VALVE |
| WH | WATER HEATER |
| WSHR | WASHER |
| WSS | WASTESIDE STREAM |
| XFMR | TRANSFORMER |

**PRELIMINARY DESIGN**
**NOT FOR CONSTRUCTION**

REGISTERED PROFESSIONAL ENGINEER — RAVI SUBRAMANIAN — No. C053679 — Exp. 06–30–2015 — CIVIL — STATE OF CALIFORNIA

| REV. NO. | DATE | DRWN | CHKD | REMARKS |
|---|---|---|---|---|
| 2 | 7–12–13 | PJR | DDN | REVISED FOR PDR SUBMITTAL |
| 1 | 10/24/12 | PJR | JTB | PDR SUBMITTIAL |

DESIGNED BY: JTB
DRAWN BY: PJR
SHEET CHK'D BY: EB
CROSS CHK'D BY: JTB
APPROVED BY: RS
DATE: JULY 2013

CDM Smith
111 Academy Way, Suite 150
Irvine, California, 92617
Tel: (949) 752-5452

OMEGA CHEMICAL SUPERFUND SITE
12504 / 12512 EAST WHITTIER BOULEVARD
12471 WASHINGTON BOULEVARD
WHITTIER, CALIFORNIA

PIPING AND INSTRUMENTION DIAGRAM
LEGEND I

PROJECT NO. 10500–97768
FILE NAME: I–1
SHEET NO.
I–1

C:\cdmxm\riehlepj\d1257128\ I–1 05/15/13 07:51 riehlepj XREFS: PRELIM NOT FOR CONST, CDMS_2234–FULL SVE, CA–Ravi–S–2013
© 2012 CDM SMITH ALL RIGHTS RESERVED.
REUSE OF DOCUMENTS: THESE DOCUMENTS AND DESIGNS PROVIDED BY PROFESSIONAL SERVICE, INCORPORATED HEREIN, ARE THE PROPERTY OF CDM SMITH AND ARE NOT TO BE USED, IN WHOLE OR PART, FOR ANY OTHER PROJECT WITHOUT THE WRITTEN AUTHORIZATION OF CDM SMITH.

## FLOW ELEMENTS

- ORIFICE PLATE
- MAGNETIC FLOW METER
- PROPELLER FLOW METER
- TURBINE FLOW METER
- ULTRASONIC FLOW METER
- THERMAL MASS FLOWMETER
- VENTURI
- POSITIVE DISPLACEMENT FLOW METER
- AVERAGING PITOT TUBE
- VORTEX FLOW METER
- WEIR
- FI — ROTAMETER
- FI — ROTAMETER WITH INTEGRAL NEEDLE VALVE

## LEVEL ELEMENTS

- ULTRASONIC
- RADAR
- CAPACITANCE
- CONDUCTANCE
- BUBBLER TUBE
- FLOAT SWITCH
- VENT
- CALIBRATION COLUMN
- LE — GUIDED RADAR
- FLOAT

## GENERAL INSTRUMENT OR FUNCTION SYMBOLS

| FUNCTION SYMBOLS | FIELD MOUNTED | PRIMARY PANEL NORMALLY ACCESSIBLE TO OPERATOR (NOTE 1) | LOCAL PANEL NORMALLY ACCESSIBLE TO OPERATOR (NOTE 1) |
|---|---|---|---|
| DISCRETE INSTRUMENTS | ○ | ⊖ | ⊖ |
| PLC OR COMPUTER SHARED CONTROL | ▢ | ▢ | ▢ |
| COMPUTER FUNCTION | ⬡ | ⬡ | ⬡ |
| PROGRAMMABLE CONTROLLER | ◇ | ◇ | ◇ |

NOTES:

1. A DASHED CENTER SINGLE LINE OR DOUBLE LINE INDICATES PRIMARY OR LOCAL PANEL NORMALLY INACCESSIBLE TO OPERATOR OR BACK PANEL MOUNTED.

Ex:

- MISCELLANEOUS HARDWIRED INTERLOCK
- I — PLC INTERLOCK
- INSTRUMENTS SHARING COMMON HOUSING
- PILOT LIGHT
- OR / AND — LOGIC BLOCK
- MISCELLANEOUS EQUIPMENT SUPPLIED BY OTHERS

## ANALYTICAL DESCRIPTORS

| | |
|---|---|
| CL2 | CHLORINE |
| COND | CONDUCTIVITY |
| DO | DISSOLVED OXYGEN |
| H2O2 | HYDROGEN PEROXIDE |
| LEAK | LEAK DETECTION |
| NIT | NITRATES |
| O2 | AMBIENT OXYGEN |
| ORP | OXIDATION REDUCTION POTENTIAL |
| pH | HYDROGEN ION CONCENTRATION |
| TURB | TURBIDITY |

## GENERAL NOTES

1. THIS IS A GENERAL LEGEND SHEET. CERTAIN SYMBOLS AND ABBREVIATIONS MAY NOT APPLY TO THIS SPECIFIC PROJECT.
2. THIS LEGEND APPLIES TO INSTRUMENTATION DIAGRAMS ONLY AND MAY DIFFER FROM LEGENDS FOR OTHER DISCIPLINES.
3. IN GENERAL THIS LEGEND SHEET AND THE INSTRUMENTATION DIAGRAMS ARE BASED ON INSTRUMENTATION SYSTEMS AND AUTOMATION SOCIETY FOR INSTRUMENTATION PRACTICES. MODIFICATIONS, ADDITIONS AND ALTERATIONS MAY HAVE BEEN MADE AS REQUIRED TO MEET PROJECT REQUIREMENTS.
4. IN THE EVENT OF DISCREPANCIES BETWEEN THE PROCESS AND INSTRUMENTATION DIAGRAMS AND THE SPECIFICATIONS, THE MORE EXPENSIVE SOLUTION OR ALTERNATIVE SHALL BE USED FOR PRICING PURPOSES. THE ENGINEER SHALL MAKE FINAL DETERMINATION OF WHICH SOLUTION TO USE.

**PRELIMINARY DESIGN**
**NOT FOR CONSTRUCTION**

## INSTRUMENTATION FUNCTIONAL CODE

| | FIRST LETTER | | SUCEEDING LETTERS (3) | | |
|---|---|---|---|---|---|
| | MEASURED OR INDICATING VARIABLE | MODIFIER | READOUT OR PASSIVE FUNCTION | OUTPUT FUNCTION | MODIFIER |
| A | ANALYSIS | | ALARM | | |
| B | BURNER,COMBUSTION | | USER'S CHOICE | USER'S CHOICE | USER'S CHOICE |
| C | CONDUCTIVITY (ELECTRICAL) | | | CONTROL | |
| D | DENSITY (MASS) OR SPECIFIC GRAVITY | DIFFERENTIAL | | | |
| E | VOLTAGE (EMF) | | PRIMARY ELEMENT | | |
| F | FLOW RATE | RATIO (FRACTION) | | | |
| G | GAGING (DIMENSIONAL) | | GLASS | | |
| H | HAND (MANUALLY INITIATED) | | | | HIGH |
| I | CURRENT (ELECTRICAL) | | INDICATE | | |
| J | POWER | SCAN | | | |
| K | TIME OR TIME–SCHEDULE | | | CONTROL STATION | |
| L | LEVEL | | LIGHT (PILOT) | | LOW |
| M | MOISTURE OR HUMIDITY | MOMENTARY | | | MIDDLE OR INTERMEDIATE |
| N | USER'S CHOICE | | USER'S CHOICE | USER'S CHOICE | USER'S CHOICE |
| O | USER'S CHOICE | | ORIFICE (RESTRICTION) | | |
| P | PRESSURE OR VACUUM | | POINT (TEST CONNECTION) | | |
| Q | QUANTITY OR EVENT | INTERGRATE OR TOTALIZE | | | |
| R | RADIATION | | RECORD OR PRINT | | |
| S | SPEED OR FREQUENCY | SAFETY | | SWITCH | |
| T | TEMPERATURE | | | TRANSMIT | |
| U | MULTIVARIABLE | | MULTIFUNCTION | MULTIFUNCTION | MULTIFUNCTION |
| V | VACUUM | | | VALVE, DAMPER OR LOUVER | |
| W | WEIGHT OR FORCE | | WELL | | |
| X | UNCLASSIFIED | X AXIS | UNCLASSIFIED | UNCLASSIFIED | UNCLASSIFIED |
| Y | EVENT,STATE, PRESENCE | Y AXIS | | RELAY OR COMPUTE DRIVE, ACTUATE | |
| Z | POSITION | Z AXIS | | (FINAL CONTROL ELEMENT) | |

## INSTRUMENT LINE SYMBOLS

- ELECTRICAL SIGNAL
- TELEPHONE SIGNAL
- ADN LINE/TELCO
- ELECTROMAGNETIC OR SONIC SIGNAL
- PNEUMATIC SIGNAL
- CAPILLARY TUBE
- HYDRAULIC SUPPLY
- INSTRUMENT SUPPLY OR CONNECTION TO PROCESS
- SCREENED INSTRUMENT LINES INDICATE EXISTING LINES TO REMAIN AS IS (ELECTRIC SIGNAL SHOWN–TYPICAL FOR OTHER SIGNALS)
- SOFTWARE OR DATA LINK SIGNAL
- ES — 120VAC POWER FROM MAIN SCADA CONTROL PANEL UPS
- ES — NON–UPS BACKED 120VAC POWER
- ES — VENDOR ELECTRICAL SOURCE
- IA — INSTRUMENT AIR SOURCE

## SIGNAL CONVERTERS

XY — X/X — OUTPUT / INPUT — FUNCTIONAL CODE

- E = VOLTAGE
- F = FREQUENCY
- H = HYDRAULIC
- I = CURRENT
- P = PNEUMATIC
- PF = PULSE FREQUENCY
- PD = PULSE DURATION
- R = RESISTANCE
- √ = SQUARE ROOT EXTRACTION
- Σ = SUM

## HAND SWITCHES

HS — XXX — SPECIFIC SWITCH FUNCTION, (TYP)

SELECTOR SWITCH

- AO = AUTO/OFF
- AM = AUTO/MANUAL
- CM = COMPUTER/MANUAL
- CL = COMPUTER/LOCAL
- ES = E–STOP
- FR = FORWARD/REVERSE
- FOR = FORWARD/OFF/REVERSE
- FS = FAST/SLOW
- FOS = FAST/OFF/SLOW
- HOA = HAND/OFF/AUTO
- HOR = HAND/OFF/REMOTE
- LLS = LEAD/LAG/STANDBY
- LOR = LOCAL/OFF/REMOTE
- LOS = LOCKOUT STOP
- LR = LOCAL/REMOTE
- OC = OPEN/CLOSE
- OCA = OPEN/CLOSE/AUTO
- OCR = OPEN/CLOSE/REMOTE
- OO = ON/OFF
- OSC = OPEN/STOP/CLOSE
- S = START
- SS = START/STOP
- SOR = START/OFF/RESET

## INSTRUMENTATION TAGGING

XXX #N — FUNCTIONAL IDENTIFICATION PER ISA STANDARDS AS MODIFIED FOR USE IN THIS CONTRACT (SEE TABLE THIS SHEET)

XXX–Y YYY N

- SUFFIX TO DIFFERENTIATE MULTIPLE FUNCTIONAL CODES (WHEN REQUIRED)
- LOOP NUMBER
- AREA DESIGNATION
- FUNCTIONAL CODE

EXAMPLE

FI 101A

FI = FUNCTIONAL CODE = FLOW INDICATOR
101 = LOOP NUMBER
A = FUNCTIONAL SUFFIX CODE
COMPLETE INSTRUMENT TAG NUMBER IS FI–101A

## I/O SIGNALS

MEASURED VARIABLE OR OUTPUT FUNCTION FROM INSTRUMENT FUNCTIONAL CODE TABLE.

- ANALOG INPUT (AI)
- ANALOG OUTPUT (AO)
- DIGITAL INPUT (DI)
- X DIGITAL OUTPUT (DO)
  - BLANK = MAINTAINED (ELECTRICALLY HELD)
  - M = MOMENTARY
  - L = LATCHED (MAGNETICALLY OR MECHANICALLY HELD)

REGISTERED PROFESSIONAL ENGINEER — RAVI SUBRAMANIAN — No. C053679 — Exp. 06–30–2015 — CIVIL — STATE OF CALIFORNIA

| REV. NO. | DATE | DRWN | CHKD | REMARKS |
|---|---|---|---|---|
| 2 | 7–12–13 | PJR | DDN | REVISED FOR PDR SUBMITTAL |
| 1 | 10–24–12 | PJR | JTB | PDR SUBMITTAL |

DESIGNED BY: JTB
DRAWN BY: PJR
SHEET CHK'D BY: EB
CROSS CHK'D BY: JTB
APPROVED BY: RS
DATE: JULY 2013

CDM Smith
111 Academy Way, Suite 150
Irvine, California, 92617
Tel: (949) 752-5452

OMEGA CHEMICAL SUPERFUND SITE
12504 / 12512 EAST WHITTIER BOULEVARD
12471 WASHINGTON BOULEVARD
WHITTIER, CALIFORNIA

PIPING AND INSTRUMENTION DIAGRAM
LEGEND II

PROJECT NO. 10500–97768
FILE NAME: I–2
SHEET NO. I–2

C:\cdmxrn\riehlepj\d1257128\I–2 07/09/13 08:56 riehlepj XREFS: PRELIM NOT FOR CONST, CDMS_2234–FULL SVE, CA–Ravi–S–2013
©2012 CDM SMITH ALL RIGHTS RESERVED.
REUSE OF DOCUMENTS AND DESIGNS PROVIDED BY PROFESSIONAL SERVICE, INCORPORATED HEREIN, ARE THE PROPERTY OF CDM SMITH.
THESE DOCUMENTS ARE NOT TO BE USED, IN WHOLE OR PART, FOR ANY OTHER PROJECT WITHOUT THE WRITTEN AUTHORIZATION OF CDM SMITH.

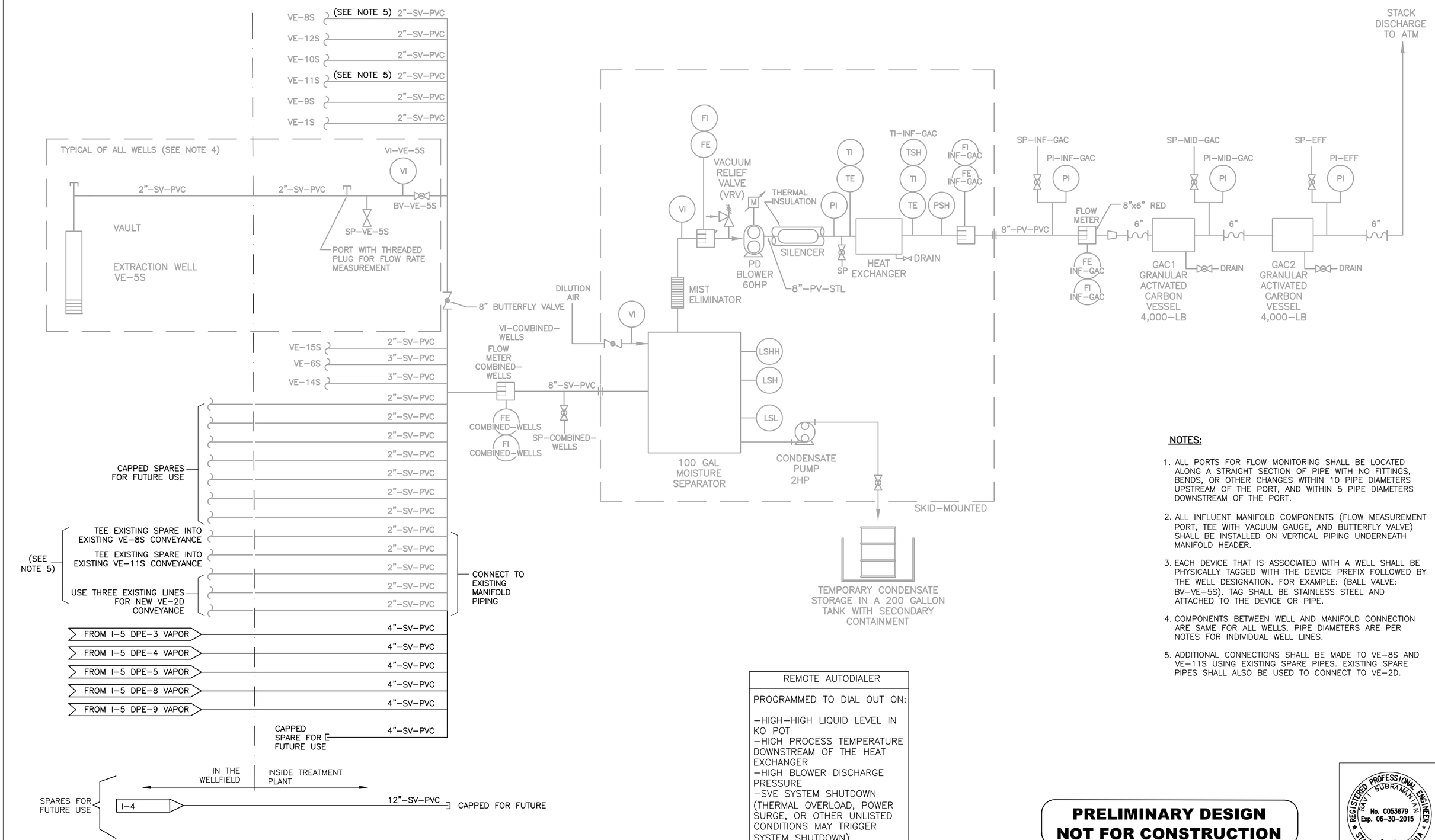


**NOTES:**

1. ALL PORTS FOR FLOW MONITORING SHALL BE LOCATED ALONG A STRAIGHT SECTION OF PIPE WITH NO FITTINGS, BENDS, OR OTHER CHANGES WITHIN 10 PIPE DIAMETERS UPSTREAM OF THE PORT, AND WITHIN 5 PIPE DIAMETERS DOWNSTREAM OF THE PORT.
2. ALL INFLUENT MANIFOLD COMPONENTS (FLOW MEASUREMENT PORT, TEE WITH VACUUM GAUGE, AND BUTTERFLY VALVE) SHALL BE INSTALLED ON VERTICAL PIPING UNDERNEATH MANIFOLD HEADER.
3. EACH DEVICE THAT IS ASSOCIATED WITH A WELL SHALL BE PHYSICALLY TAGGED WITH THE DEVICE PREFIX FOLLOWED BY THE WELL DESIGNATION. FOR EXAMPLE: (BALL VALVE: BV-VE-5S). TAG SHALL BE STAINLESS STEEL AND ATTACHED TO THE DEVICE OR PIPE.
4. COMPONENTS BETWEEN WELL AND MANIFOLD CONNECTION ARE SAME FOR ALL WELLS. PIPE DIAMETERS ARE PER NOTES FOR INDIVIDUAL WELL LINES.
5. ADDITIONAL CONNECTIONS SHALL BE MADE TO VE-8S AND VE-11S USING EXISTING SPARE PIPES. EXISTING SPARE PIPES SHALL ALSO BE USED TO CONNECT TO VE-2D.

| REMOTE AUTODIALER |
|---|
| PROGRAMMED TO DIAL OUT ON:<br><br>-HIGH-HIGH LIQUID LEVEL IN KO POT<br>-HIGH PROCESS TEMPERATURE DOWNSTREAM OF THE HEAT EXCHANGER<br>-HIGH BLOWER DISCHARGE PRESSURE<br>-SVE SYSTEM SHUTDOWN (THERMAL OVERLOAD, POWER SURGE, OR OTHER UNLISTED CONDITIONS MAY TRIGGER SYSTEM SHUTDOWN) |

**PRELIMINARY DESIGN**
**NOT FOR CONSTRUCTION**

REGISTERED PROFESSIONAL ENGINEER RAVI SUBRAMANIAN No. C053679 Exp. 06-30-2015 CIVIL STATE OF CALIFORNIA

| REV. NO. | DATE | DRWN | CHKD | REMARKS |
|---|---|---|---|---|
| 7 | 6/25/13 | PJR | IL | REVISED FOR PDR SUBMITTAL |
| 6 | 5/17/13 | PJR | DDN | REVISED FOR PDR SUBMITTAL |
| 5 | 10/24/12 | PJR | JTB | PDR SUBMITTAL |
| 4 | 5/11 | JBP | JLD | FOR RECORD DRAWING |
| 3 | 11/10 | MAR | VTB | FOR RECORD DRAWING |
| 2 | 6/10 | PJR | | FOR RECORD DRAWING |
| 1 | 1/20/10 | PJR | JTB | FOR PRELIMINARY DESIGN REPORT |

DESIGNED BY: JTB
DRAWN BY: PJR
SHEET CHK'D BY: HC
CROSS CHK'D BY: JTB
APPROVED BY: RS
DATE: JULY 2013

CDM Smith
111 Academy Way, Suite 150
Irvine, California, 92617
Tel: (949) 752-5452

OMEGA CHEMICAL SUPERFUND SITE
12504 / 12512 EAST WHITTIER BOULEVARD
12471 WASHINGTON BOULEVARD
WHITTIER, CALIFORNIA

PIPING AND INSTRUMENTION DIAGRAM
SVE1

PROJECT NO. 10500-97768
FILE NAME:
SHEET NO.
I-3

C:\cdmxm\riehlep\d12571 28\ I-3 07/03/13 08:53 riehlep XREFS: PRELIM NOT FOR CONST, CDMS_2234-FULL SVE, CA-Rovi-S-2013
©2012 CDM SMITH ALL RIGHTS RESERVED.
REUSE OF DOCUMENTS: THESE DOCUMENTS AND DESIGNS PROVIDED BY PROFESSIONAL SERVICE, INCORPORATED HEREIN, ARE THE PROPERTY OF CDM SMITH AND ARE NOT TO BE USED, IN WHOLE OR PART, FOR ANY OTHER PROJECT WITHOUT THE WRITTEN AUTHORIZATION OF CDM SMITH.

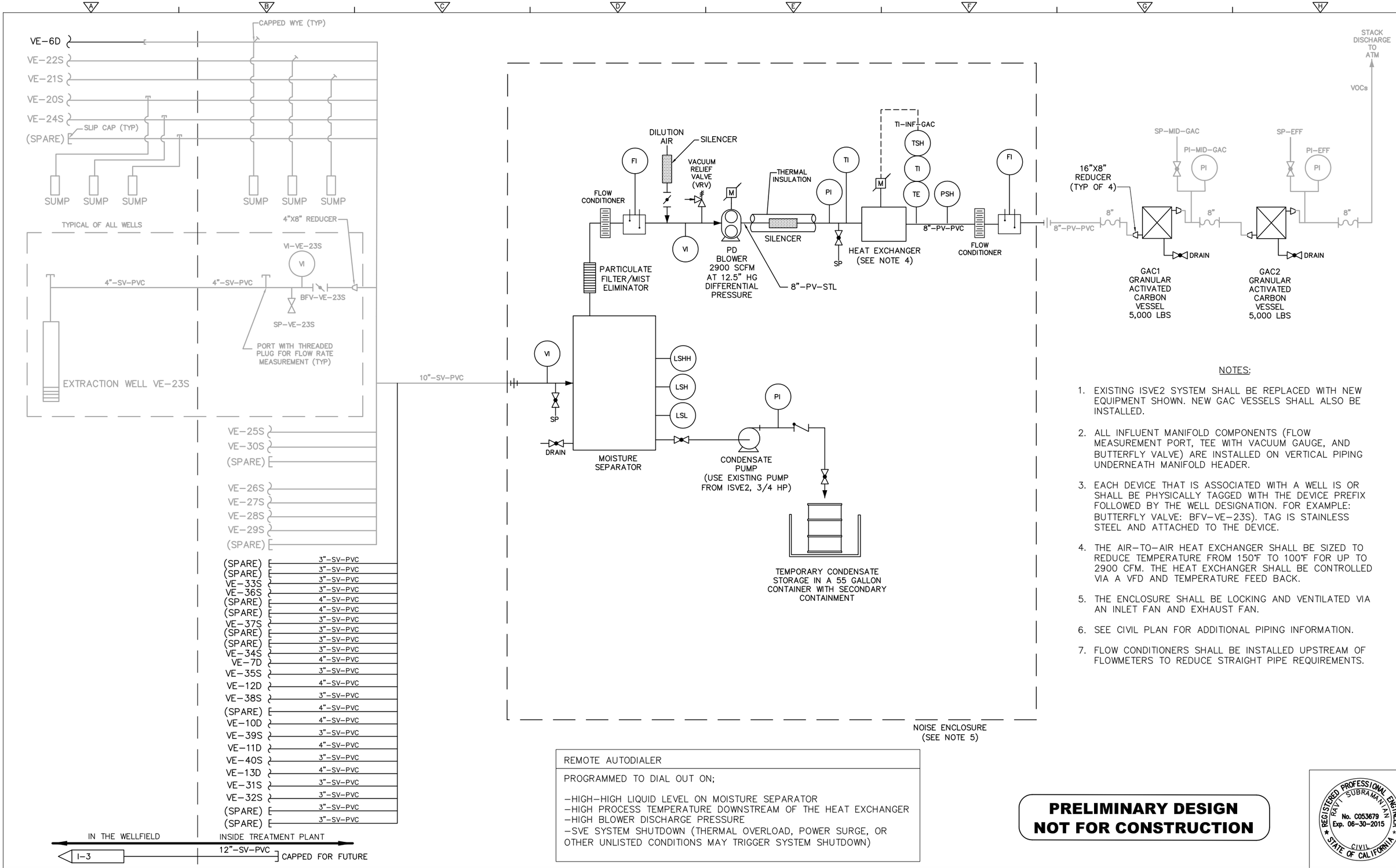


NOTES:

1. EXISTING ISVE2 SYSTEM SHALL BE REPLACED WITH NEW EQUIPMENT SHOWN. NEW GAC VESSELS SHALL ALSO BE INSTALLED.
2. ALL INFLUENT MANIFOLD COMPONENTS (FLOW MEASUREMENT PORT, TEE WITH VACUUM GAUGE, AND BUTTERFLY VALVE) ARE INSTALLED ON VERTICAL PIPING UNDERNEATH MANIFOLD HEADER.
3. EACH DEVICE THAT IS ASSOCIATED WITH A WELL IS OR SHALL BE PHYSICALLY TAGGED WITH THE DEVICE PREFIX FOLLOWED BY THE WELL DESIGNATION. FOR EXAMPLE: BUTTERFLY VALVE: BFV-VE-23S). TAG IS STAINLESS STEEL AND ATTACHED TO THE DEVICE.
4. THE AIR-TO-AIR HEAT EXCHANGER SHALL BE SIZED TO REDUCE TEMPERATURE FROM 150°F TO 100°F FOR UP TO 2900 CFM. THE HEAT EXCHANGER SHALL BE CONTROLLED VIA A VFD AND TEMPERATURE FEED BACK.
5. THE ENCLOSURE SHALL BE LOCKING AND VENTILATED VIA AN INLET FAN AND EXHAUST FAN.
6. SEE CIVIL PLAN FOR ADDITIONAL PIPING INFORMATION.
7. FLOW CONDITIONERS SHALL BE INSTALLED UPSTREAM OF FLOWMETERS TO REDUCE STRAIGHT PIPE REQUIREMENTS.

REMOTE AUTODIALER

PROGRAMMED TO DIAL OUT ON;

-HIGH-HIGH LIQUID LEVEL ON MOISTURE SEPARATOR
-HIGH PROCESS TEMPERATURE DOWNSTREAM OF THE HEAT EXCHANGER
-HIGH BLOWER DISCHARGE PRESSURE
-SVE SYSTEM SHUTDOWN (THERMAL OVERLOAD, POWER SURGE, OR OTHER UNLISTED CONDITIONS MAY TRIGGER SYSTEM SHUTDOWN)

**PRELIMINARY DESIGN**
**NOT FOR CONSTRUCTION**

REGISTERED PROFESSIONAL ENGINEER RAVI SUBRAMANIAN No. C053679 Exp. 06-30-2015 CIVIL STATE OF CALIFORNIA

| REV. NO. | DATE | DRWN | CHKD | REMARKS |
|---|---|---|---|---|
| 2 | 7-31-13 | PJR | DDN | REVISED FOR PDR SUBMITTAL |
| 1 | 10/24/12 | PJR | JTB | PDR SUBMITTAL |

DESIGNED BY: MJF
DRAWN BY: PJR
SHEET CHK'D BY: MJF
CROSS CHK'D BY: JTB
APPROVED BY: RS
DATE: JULY 2013

CDM Smith
111 Academy Way, Suite 150
Irvine, California, 92617
Tel: (949) 752-5452

OMEGA CHEMICAL SUPERFUND SITE
12504 / 12512 EAST WHITTIER BOULEVARD
12471 WASHINGTON BOULEVARD
WHITTIER, CALIFORNIA

PIPING AND INSTRUMENTATION DIAGRAM
SVE2

PROJECT NO. 10500-97768
FILE NAME: I-4
SHEET NO.
I-4

C:\cdmxm\riehlepj\d1257128\ I-4 07/24/13 10:03 riehlepj XREFS: PRELIM NOT FOR CONST, CDMS_2234-FULL SVE, CA-Ravi-S-2015
©2012 CDM SMITH ALL RIGHTS RESERVED.
REUSE OF DOCUMENTS: THESE DOCUMENTS AND DESIGNS PROVIDED BY PROFESSIONAL SERVICE, INCORPORATED HEREIN, ARE THE PROPERTY OF CDM SMITH AND ARE NOT TO BE USED, IN WHOLE OR PART, FOR ANY OTHER PROJECT WITHOUT THE WRITTEN AUTHORIZATION OF CDM SMITH.

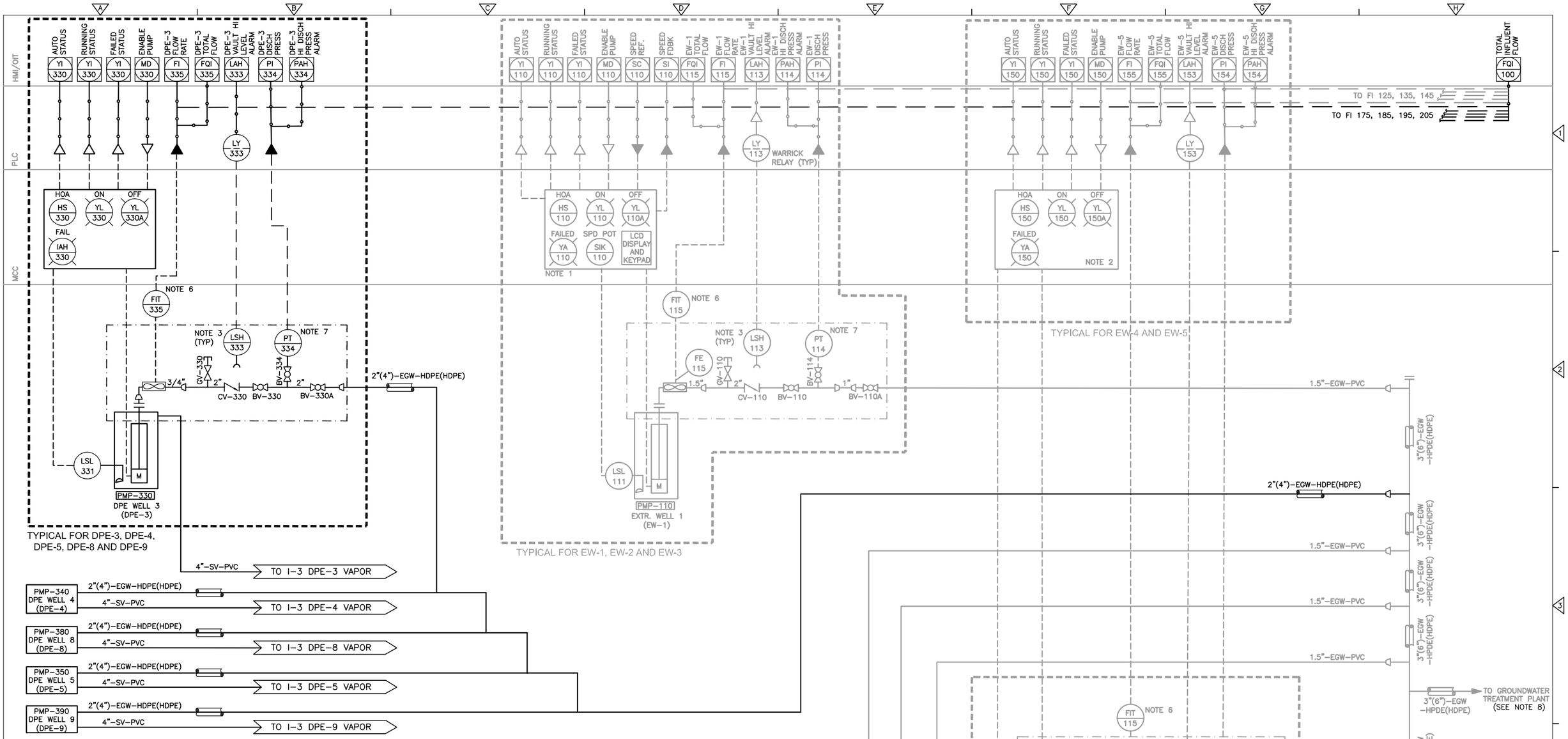


NOTES:

1. VFD LOCATED AT MCC. TYPICAL FOR EW-1, EW-2, AND EW-3.
2. MCC BUCKET. TYPICAL FOR EW-4 AND EW-5.
3. LEVEL PROBE WARRICK SERIES 3R OR EQUAL. PROVIDE ALL ACCESSORIES AND RELAY REQUIRED FOR INSTALLATION AND OPERATION.
4. NOT USED.
5. NOT USED.
6. FLOW TRANSDUCER (FE) SHALL BE SEAMETRICS IP80 SERIES WITH BUILT-IN 115VAC POWER SUPPLY. FLOW METER SHALL BE ORDERED WITH IMMERSION OPTION/KIT (-50). PROVIDE AND INSTALL FLOW TRANSITTER (FT420) ON PLC PANEL DOOR.
7. PRESSURE TRANSDUCER (PT) SHALL BE ENDRESS+HAUSER PMC131 OR EQUAL.
8. FOR DETAILS ON GROUNDWATER TREATMENT PLANT, SEE RECORD DRAWINGS (CDM SMITH, SEPTEMBER 2009).

**PRELIMINARY DESIGN**
**NOT FOR CONSTRUCTION**

REGISTERED PROFESSIONAL ENGINEER RAVI SUBRAMANIAN No. C053679 Exp. 06-30-2015 CIVIL STATE OF CALIFORNIA

| REV. NO. | DATE | DRWN | CHKD | REMARKS |
|---|---|---|---|---|
| 4 | 7-12-13 | PJR | NLS | REVISED FOR PDR SUBMITTAL |
| 3 | 9-29-09 | JJ | MM | REVISED OF RECORD DRAWINGS |
| 2 | 3-21-08 | MS | MD | SWITCHED FLOW & PRESSURE INSTR. BECAUSE OF FLOODING CONCERNS |
| 1 | 6-1-07 | MS | MD | REVISED TO ADDRESS CITY OF WHITTIER COMMENTS |
| 0 | 3-20-07 | MS | MD | SUBMITTED FOR PLAN CHECK |

DESIGNED BY: IL
DRAWN BY: PJR
SHEET CHK'D BY: IL
CROSS CHK'D BY: JTB
APPROVED BY: RS
DATE: JULY 2013

CDM Smith
111 Academy Way, Suite 150
Irvine, California, 92617
Tel: (949) 752-5452

OMEGA CHEMICAL SUPERFUND SITE
12504 / 12512 EAST WHITTIER BOULEVARD
12471 WASHINGTON BOULEVARD
WHITTIER, CALIFORNIA

PIPING AND INSTRUMENTION DIAGRAM
GROUNDWATER AND DUAL PHASE
EXTRACTION WELLS

PROJECT NO. 10500-97768
FILE NAME:
SHEET NO. I-5

C:\cdmxm\rieh1ep\d1257128\ I-5 07/03/13 08:51 rieh1ep XREFS: PRELIM NOT FOR CONST, CDMS_2234-FULL SVE, CA-Ravi-S-2013
©2012 CDM SMITH ALL RIGHTS RESERVED.
REUSE OF DOCUMENTS: THESE DOCUMENTS AND DESIGNS PROVIDED BY PROFESSIONAL SERVICE, INCORPORATED HEREIN, ARE THE PROPERTY OF CDM SMITH AND ARE NOT TO BE USED, IN WHOLE OR PART, FOR ANY OTHER PROJECT WITHOUT THE WRITTEN AUTHORIZATION OF CDM SMITH.