Contract No. N40192-10-D-2810

Solicitation No.
N40192-10-R-2800

SMALL BUSINESS MULTIPLE AWARD CONSTRUCTION CONTRACT (MACC)

VARIOUS LOCATIONS, GUAM

PART II
GENERAL REQUIREMENTS

SECTION 00 01 15

LIST OF DRAWINGS
01/07

PART 1 GENERAL

1.1 SUMMARY

This section lists the drawings for the project pursuant to contract clause "DFARS 252.236-7001, Contract Drawings, Maps and Specifications."

1.2 CONTRACT DRAWINGS

Contract drawings are to be determined per task order.

1.3 SUPPLEMENTARY DRAWINGS

These supplementary drawings may not be a part of the contract but are included with the drawings for information.

1.3.1 Reference Drawings

Reference drawings are intended only to show the original construction. Drawings are the property of the Government and shall not be used for any purpose for any purpose other than that intended by the contract. Drawings are available at the bidder's or Contractor's expense. Information for procuring these drawings may be available from the Contracting Officer. Drawings may be inspected during regular working hours at the NAVFAC Marianas Library, Building 103,lower level.

1.3.2 Boring Logs

The Government does not guarantee that borings indicate actual conditions, except for the exact locations and the time that they were made.

1.3.3 Subsurface Data

Subsurface data, not specified or indicated, have been obtained by the Government from other contracts. The data are available for examination by prospective bidders at the office of the Contracting Officer or at the NAVFAC Marianas Library.

PART 2 PRODUCTS

Not used.

PART 3 EXECUTION

Not used.

-- End of Section --

SECTION 00 31 10

METRIC MEASUREMENTS

04/06

1.1 REFERENCES

The publications listed below form a part of this specification to the extent referenced. The publications are referred to within the text by the basic designation only.

ASTM INTERNATIONAL (ASTM)

ASTM E 621	(1994e1; R 1999) Use of Metric (SI) Units in Building Design and Construction (Committee E-6 Supplement to E380)
IEEE/ASTM SI 10	(2002) American National Standard for Use of the International System of Units (SI): The Modern Metric System

1.2 GENERAL

This project includes metric units of measurements. The metric units used are the International System of Units (SI) developed and maintained by the General Conference on Weights and Measures (CGPM); the name International System of Units and the international abbreviation SI were adopted by the 11th CGPM in 1960. A number of circumstances require that both metric SI units and English inch-pound (I-P) units be included in a section of the specifications. When both metric and I-P measurements are included, the section may contain measurements for products that are manufactured to I-P dimensions and then expressed in mathematically converted metric value (soft metric) or, it may contain measurements for products that are manufactured to an industry recognized rounded metric (hard metric) dimensions but are allowed to be substituted by I-P products to comply with the law. Dual measurements are also included to indicate industry and/or Government standards, test values or other controlling factors, such as the code requirements where I-P values are needed for clarity or to trace back to the referenced standards, test values or codes.

1.3 USE OF MEASUREMENTS IN SPECIFICATIONS

Measurements in specifications shall be either in SI or I-P units as indicated, except for soft metric measurements or as otherwise authorized. When only SI or I-P measurements are specified for a product, the product shall be procured in the specified units (SI or I-P) unless otherwise authorized by the Contracting Officer. The Contractor shall be responsible for all associated labor and materials when authorized to substitute one system of units for another and for the final assembly and performance of the specified work and/or products.

1.3.1 Hard Metric

A hard metric measurement is indicated by an SI value with no expressed correlation to an I-P value. Hard metric measurements are often used for

field data such as distance from one point to another or distance above the floor. Products are considered to be hard metric when they are manufactured to metric dimensions or have an industry recognized metric designation.

1.3.2 Soft Metric

a. A soft metric measurement is indicated by an SI value which is a mathematical conversion of the I-P value shown in parentheses (e.g. 38.1 mm (1-1/2 inches)). Soft metric measurements are used for measurements pertaining to products, test values, and other situations where the I-P units are the standard for manufacture, verification, or other controlling factor. The I-P value shall govern while the metric measurement is provided for information.

b. A soft metric measurement is also indicated for products that are manufactured in industry designated metric dimensions but are required by law to allow substitute I-P products. These measurements are indicated by a manufacturing hard metric product dimension followed by the substitute I-P equivalent value in parentheses (e.g., 190 x 190 x 390 mm (7-5/8 x 7-5/8 x 15-5/8 inches)).

1.3.3 Neutral

A neutral measurement is indicated by an identifier which has no expressed relation to either an SI or an I-P value (e.g., American Wire Gage (AWG) which indicates thickness but in itself is neither SI nor I-P).

1.4 COORDINATION

Discrepancies, such as mismatches or product unavailability, arising from use of both metric and non-metric measurements and discrepancies between the measurements in the specifications and the measurements in the drawings shall be brought to the attention of the Contracting Officer for resolution.

1.5 RELATIONSHIP TO SUBMITTALS

Submittals for Government approval or for information only shall cover the SI or I-P products actually being furnished for the project. The Contractor shall submit the required drawings and calculations in the same units used in the contract documents describing the product or requirement unless otherwise instructed or approved. The Contractor shall use IEEE/ASTM SI 10 and ASTM E 621 as the basis for establishing metric measurements required to be used in submittals.

PART 2 PRODUCTS

Not used.

PART 3 EXECUTION

Not used.

-- End of Section --

SECTION 01 14 00.05 20

WORK RESTRICTIONS FOR DESIGN-BUILD
11/07

PART 1 GENERAL

1.1 DEFINITIONS

1.1.1 State

"State" when used in reference to states of the United States shall also include the Territory of Guam.

1.2 SUBMITTALS

The use of a "G" following a submittal indicates that a Government approval action is required. Submit the following in accordance with Section 01 33 10.05 20 DESIGN SUBMITTAL PROCEDURES and Section 01 33 00.05 20 CONSTRUCTION SUBMITTAL PROCEDURES.

SD-01 Preconstruction Submittals

List of contact personnel; G

Personnel List: G

Vehicle List; G

Statement of Acknowledgement Form SF 1413: G

1.3 SPECIAL SCHEDULING REQUIREMENTS

a. Have materials, equipment, and personnel required to perform the work at the site prior to the commencement of the work.

b. The facility will remain in operation during the entire construction period. Conduct operations so as to cause the least possible interference with normal operations of the activity.

c. Permission to interrupt any Activity roads, and/or utility service shall be requested in writing a minimum of 30 calendar days prior to the desired date of interruption.

d. The work under this contract requires special attention to the scheduling and conduct of the work in connection with existing operations. Identify on the construction schedule each factor which constitutes a potential interruption to operations.

e. One Net and Other Government Contractors Access: The One Net Contractor and other Government Contractors must be allowed access to the facility towards the end of construction (finishes 90% complete, rough-in 100% complete, Inside Plant (ISP)/Outside Plant (OSP) infrastructure in place) to provide equipment in the telecommunications rooms and make final connections. The Contractor will be required to

coordinate their efforts with the One Net contractor to facilitate joint use of building spaces during the final phases of construction and work the coordination effort into the construction schedule. Requirements for NMCI are specified in Part 4, D50 ELECTRICAL and G40 SITE ELECTRICAL UTILITIES.

1.4 CONTRACTOR ACCESS AND USE OF PREMISES

1.4.1 Activity Regulations

Ensure that Contractor personnel employed on the Activity become familiar with and obey Activity regulations including safety, fire, traffic and security regulations. Keep within the limits of the work and avenues of ingress and egress. To minimize traffic congestion, delivery of materials shall be outside of peak traffic hours (6:30 to 8:00 a.m. and 3:30 to 5:00 p.m.) unless otherwise approved by the Contracting Officer. Wear hard hats in designated areas. Do not enter any restricted areas unless required to do so and until cleared for such entry. The Contractor's equipment shall be conspicuously marked for identification.

Motor Vehicle Operation - Ingress and egress of personnel will be subject to the security regulations of the Station.

(1) All personnel must be made aware of the posted base speed limits.

(2) Parking is in designated areas only, between two white lines. No parking is permitted in fire lanes, on seeded areas, in parking slots reserved for general officers and handicapped personnel.

(3) Traffic accidents should be reported immediately to the Base Security Police by calling 116.

(4) All personnel entering the installation are subject to random vehicle inspections. The purpose of these inspections is to detect the theft of Government and private property, and to detect contraband or illegal drugs.

(5) Required Information on Privately Owned Vehicles - Advise company employees who desire to use their privately owned vehicles to personally bring the vehicle, vehicle registration, copy of vehicle insurance policy, valid state inspection documentation, and driver's license to the CNM Main Gate, Pass and Identification Office. Access to the Base for privately owned vehicles may be limited.

(6) Access to Restricted Areas - Base entry passes allow access to designated areas on the installation only. Entry into off limits areas is prohibited unless the contract requires it.

(7) Current Information - Contractors will be responsible for keeping the vehicle and employee lists current, and for securing and returning identification cards belonging to terminated employees to the CNM Pass and Identification Office.

1.4.1.1 Subcontractors and Personnel Contacts

Furnish a list of contact personnel of the Contractor and subcontractors including addresses and telephone numbers for use in the event of an

emergency. As changes occur and additional information becomes available, correct and change the information contained in previous lists.

1.4.1.2 Identification Badges

Identification badges, if required, will be furnished without charge. Application for and use of badges will be as directed. Maintain a completed EMPLOYMENT ELIGIBILITY VERIFICATION form (DHS FORM I-9) for all personnel requesting badges. This form is available at http://uscis.gov/graphics/formsfee/forms/fiels/i-9.pdf. Contractor shall maintain copy of completed EMPLOYMENT VERIFICATION FORM and immediately report instances of lost or stolen badges to the Contracting Officer.

1.4.1.3 Commander, Navy Region Marianas (CNRM) Fuel Division, Safety/Security Policy

Non-CNRM Fuel Division personnel requiring access to the Fuel Farm and other Fuel Division property shall check in at Bldg. 1700, Sasa Valley Fuel Farm, at the beginning and end of each work day. Keys to Fuel Facilities will be issued daily between the hours of 7:30 a.m. and 4:00 p.m. Keys must be returned by 7:00 p.m. the same day.

At the end of each workday, update the check-in board in the Fuel Division Operations and provide information as follows for the next workday:

a. Contract name or number

b. Name of person responsible for work crew(s)

c. Emergency phone numbers

d. Number of workers in crew

e. Location of work

f. Type of work to be conducted

g. Fuel Division support required:

1) Draining of pipe

2) Outages

Route hot work permits to the CNRM Fuel Division for approval. Following approval, submit permit to the Federal Fire Department (FFD). After approval by the FFD, submit a copy of the permit and the Marine Chemist Gas Free Certificate to the Fuels Operations Division for record.

1.4.1.4 Naval Computer and Telecommunications Station (NCTS) Safety/Security Policy

Non-NCTS personnel requiring access to the critical facilities of NCTS property shall be U.S. Citizens.

1.4.2 Working Hours

Regular working hours shall consist of an 8 hour period, between 6:00 a.m. and 6:00 p.m., Monday through Friday.

1.4.3 Work Outside Regular Hours

Work outside regular working hours requires Contracting Officer approval. Request must be submitted a minimum of 3 calendar days prior to such work to allow arrangements to be made by the Government, giving the specific dates, hours, location, type of work to be performed, contract number and project title. Based on the justification provided, the Contracting Officer may approve work outside regular hours. During periods of darkness, the different parts of the work shall be lighted in a manner approved by the Contracting Officer. If utility cutovers/outages are required, they shall be made, to the maximum extent possible, after normal working hours or on Saturdays, Sundays, and Federal Government holidays. Contractors must pay time and one half wages for all work in excess of 40 hours per week and all other costs associated with the outage. Approval of overtime work does NOT constitute a change to the contract or task order.

1.4.4 Occupied and Existing Buildings

The Contractor shall be working in and around existing buildings which are occupied. Do not enter the buildings without prior approval of the Contracting Officer.

The existing buildings and their contents shall be kept secure at all times. Provide temporary closures as required to maintain security as directed by the Contracting Officer.

Provide dust covers or protective enclosures to protect existing work that remains and Government material during the construction period.

Relocate movable furniture away from the Contractor's working area as required to perform the work, protect the furniture, and replace the furniture in their original locations upon completion of the work.

1.4.5 Utility Cutovers and Interruptions

a. Make utility cutovers and interruptions after normal working hours or on Saturdays, Sundays, and Government holidays. Conform to procedures required in the paragraph "Work Outside Regular Hours."

b. Ensure that new utility lines are complete, except for the connection, before interrupting existing service.

c. Interruption to water, sanitary sewer, storm sewer, telephone service, electric service, air conditioning, heating, fire alarm, roads, and compressed air shall be considered utility cutovers pursuant to the paragraph entitled "Work Outside Regular Hours." The period of interruption shall be further limited to the approval of the Contracting Officer. This time limit includes time for deactivation and reactivation.

d. Operation of Station Utilities: The Contractor shall not operate nor disturb the setting of control devices in the station utilities

system, including water, sewer, electrical, and steam services. The Government will operate the control devices as required for normal conduct of the work. The Contractor shall notify the Contracting Officer giving reasonable advance notice when such operation is required.

1.4.5.1 Location of Underground Utilities

Obtain digging permits prior to start of excavation by contacting the Contracting Officer 30 calendar days in advance. Scan the construction site with electromagnetic or sonic equipment, and mark the surface of the ground or paved surface where existing underground utilities or utilities encased in pier structures are discovered. Verify the elevations of existing piping, utilities, and any type of underground or encased obstruction not indicated to be specified or removed but indicated or discovered during scanning in locations to be traversed by piping, ducts, and other work to be conducted or installed. Provide annotated drawings of all discovered utilities as part of the submission for the digging permits. The contractor is responsible for all utility markings.

a. Notification Prior to Excavation: Notify the Contracting Officer at least 30 days prior to starting excavation work.

1.5 SECURITY REQUIREMENTS

Contract Clause "FAR 52.204-2, Security Requirements and Alternate II," "FAC 5252.236-9301, Special Working Conditions and Entry to Work Area," and the following apply:

1.5.1 Personnel List

Submit Base Access Request for approval, at least 21 days prior to the desired date of entry, an original alphabetical list of personnel who require entry into Government property to perform work on the project. Furnish for each person:

a. Name

b. Date and place of birth

c. Citizenship

d. Home address

e. Social security number

f. Current pass expiration date

g. Naturalization or Alien Registration number

h. Passport number, place of issue, and expiration date

i. Guam Police clearance report for last six months

j. USAF Contractor/Sub-Contractor Access Affidavit as required by Andersen Air Force Base Guam

The request for personnel passes shall be accompanied with the following certification:

"I hereby certify that all personnel on this list are either born U.S. citizens, naturalized U.S. citizens with the naturalization number shown, or legal aliens with the alien registration number indicated."

Signature/Firm Name

1.5.2 Vehicle List

Submit an original list of vehicles to be utilized at the work site with the following information for each vehicle:

a. Make

b. Year

c. Model

d. License number

e. Registered owner

f. Current NAVBASE Guam pass expiration date

1.5.3 Passes

Submit request for personnel and vehicle passes together. Include the Certificate of Insurance for Contractor and Subcontractor(s) and the Statement of Acknowledgement Form SF 1413 with the submittal. Passes will normally be issued within 21 days.

1.5.3.1 Control

Maintain strict accountability over passes. Immediately report to the source of issue, passes missing or lost and the circumstances. If the Contractor has another active contract or one commencing immediately, employees' names may be transferred from one contract to the other. Final payment will not be effected until employees are transferred to another contract or the records are cleared. Furnish a signed letter, countersigned by the source of issue, stating that passes have been turned in.

1.5.4 Photographs

The possession or use of photography equipment is prohibited in and around restricted areas. When photography is required under this contract, the contractor shall submit a completed photographer’s identification card request to the Contracting Officer at least 14 calendar days in advance. The request shall identify the person and equipment involved and the location and purpose of the photographs. All photographs are subject to review by the Government prior to release.

1.6 Special Scheduling Requirements for Family Housing Area

1.6.1 Minimal Interference

The Contractor shall conduct his operations so as to cause the least possible interference with the building/or housing tenants.

1.6.2 Interruption to Operations

The work under this contract requires special attention to the scheduling and conduct of the work in connection with existing operations. Identify on the project schedule each factor, which constitutes a potential interruption to operations. Permission to interrupt any Activity roads, and/or utility service shall be requested in writing a minimum of 15 calendar days prior to the desired date of interruption.

1.6.2.1 Notification

Housing residents shall be notified of any work in and around Housing Areas before any work is started. Buildings or housing units shall remain accessible to tenants. The Contractor shall coordinate roof access with the housing tenant(s) or, if the tenant is not home, by taping the notice to the front door of the unit(s), in a conspicuous location. The written notice shall be prepared by the Contractor in coordination with the Contracting Officer and shall indicate the construction or renovation project area to include, but not limited to the building and/or house number, street name, and the type of work to be accomplished. The start and completion dates shall be included on the notice. If it is necessary to shut down or interrupt utility systems, a new notice is required and the times and dates of the outage shall be indicated on the notice. Prior to the start of delivery of the first notice, a list of units to be served with the written notice shall be submitted to the Contracting Officer and the U.S. Navy Family Housing Department for approval and information. Delivery schedule of written notice to the tenants by the Contractor to be done on three occasions are as follows:

a. **1st**: Fourteen (14) calendar days prior to the impending start of work.

b. **2nd**: Seven (7) calendar days prior to the impending start of work.

c. **3rd**: Twenty four (24) hours prior to the start of work in or around each unit to confirm the intent of the Contractor to start work in or around each unit the following day. If an outage will affect a whole housing area or a partial area, a notice 24 hours prior to the outage shall be placed on each unit affected.

1.6.3 Air Conditioning Warranty Work

For air conditioning work at military housing units, the Contractor shall be available to perform warranty work 24-hours a day, 7-days a week, and respond on-site to the housing unit within two (2) hours of receipt of notification. Thereafter, all repair work must be completed within eight (8) hours unless otherwise directed by the Contracting Officer. The Contractor shall remedy at the Contractor's expense any failure to conform, or any defect in the air conditioning work. Costs related to this special requirement for 24-hours, 7-days, and 2-hour warranty response shall be inclusive in the price for projects with air conditioning work at military housing units.

1.6.4 Weekend Work

Normally, no work is allowed on weekends at Housing Areas. For an exception to this policy, the Contractor must submit a written request to the Contracting Officer. Approval of the request is at the sole discretion of the Contracting Officer in coordination with the Housing Manager.

PART 2 PRODUCTS

Not used.

PART 3 EXECUTION

Not used.

-- End of Section --

SECTION 01 20 00.05 20

PRICE AND PAYMENT PROCEDURES FOR DESIGN-BUILD
11/07

PART 1 GENERAL

1.1 REFERENCES

The publications listed below form a part of this specification to the extent referenced. The publications are referred to within the text by the basic designation only.

U.S. ARMY CORPS OF ENGINEERS (USACE)

EP-1110-1-8	(2003) Construction Equipment Ownership and Operating Expense Schedule, Vol 1-12

1.2 SUBMITTALS

The use of a "G" following a submittal indicates that a Government approval action is required. Submit the following in accordance with Section 01 33 10.05 20 DESIGN SUBMITTAL PROCEDURES and Section 01 33 00.05 20 CONSTRUCTION SUBMITTAL PROCEDURES.

SD-01 Preconstruction Submittals

Schedule of prices;G

1.3 SCHEDULE OF PRICES

1.3.1 Schedule Instructions

Payments will not be made until the Preliminary Schedule of Prices and Cost Loaded Critical Path Method (CPM) schedule have been submitted to and accepted by the Contracting Officer. The Schedule of Prices shall be separated as follows:

a. Primary Facility/s Cost Breakdown: Defined as work on the primary facility/s out to the 1.5 m (5 foot) line. Work out to the 1.5 m (5 foot) line shall include construction encompassed within a theoretical line 1.5 m (5 foot) from the face of exterior walls and shall include attendant construction, such as pad mounted HVAC equipment, that may extend beyond the 1.5 m (5 foot) line.

b. Supporting Facilities Cost Breakdown: Defined as site work, including incidental work, outside the 1.5 m (5 foot) line.

1.3.1.1 Additional Facility Price Data

For the purposes of historical pricing data collection for Government use only, simultaneously submit this data to the NAVFAC Chief Cost Engineer at the following mailing or email address within 30 days of contract award:

a. Commander
Naval Facilities Engineering Command Atlantic
6506 Hampton Blvd.
Norfolk, VA 23508-1278
Attention: CI Cost

b. FacilityCostData@navy.mil

This information is for Government internal purposes only for tracking historical primary and support facility pricing and will not be used for any scope, price, or evaluation purposes.

1.3.2 Schedule Requirements for HVAC TAB

The field work required by PTS Section D30, HVAC, shall be broken down in the NAS by separate line items which reflect measurable deliverables. Specific payment percentages for each line item shall be determined on a case by case basis for each contract. The line items shall be as follows:

a. Approval of Design Review Report

b. Approval of the pre-field engineering report

c. Season I field work

d. Approval of Season I report

e. Completion of Season I field QA check

f. Approval of Season II report

1.3.3 Data Required

The information required for the Schedule of Prices will be entered as an integral part of the Network Analysis Schedule (NAS) and its Mathematical Analysis. Provide a detailed breakdown of the contract price, giving quantities for each of the various kinds of work, unit prices, and extended prices therefore. Costs shall be summarized and totals provided for each construction category.

1.3.4 Construction Categories

The construction categories to be determined per task order apply to work covered by this specification. These construction categories are found in the DD Form 1391.

Contractor shall determine all additional applicable Construction Categories from the “Category Codes for Military Real Property”, which is available from the Contracting Officer. Divide detailed breakdown into each construction category, sufficient for completion of the DD Form 1354, Transfer and Acceptance of Military Real Property. Subcontractors who may be involved in work under more than one of these categories shall be advised of this requirement in order to furnish such data without delay. Construction categories given above may be modified by the Contracting Officer as necessary during course of work.

Cost data accumulated under this section are required in the preparation of DD Form 1354. Coordinate with UFGS Section 01 33 10.05 20, *Design Submittal Procedures* paragraph “DD Form 1354”.

1.4 CONTRACT MODIFICATIONS

In conjunction with the Contract Clause "DFARS 252.236-7000, Modification Proposals-Price Breakdown," and where actual ownership and operating costs of construction equipment cannot be determined from Contractor accounting records, equipment use rates shall be based upon the applicable provisions of the EP-1110-1-8.

1.5 CONTRACTOR'S INVOICE AND CONTRACT PERFORMANCE STATEMENT

1.5.1 Content of Invoice

Requests for payment will be processed in accordance with the Contract Clause "FAR 52.232-27, Prompt Payment Construction Contracts," and shall include items required by FAR 52.232-5, "Payments under Fixed-Price Construction Contracts" and the following:

a. The Contractor's invoice certified by QC, on the form furnished by the Government for this purpose, showing in summary form, the basis for arriving at the amount of the invoice. Submit number of copies required by the Contracting Officer.

b. The Contract Performance Statement on the form furnished by the Government for this purpose, showing in detail, the estimated cost, percentage of completion, and value of completed performance for each of the construction categories stated in this contract. Submit number of copies required by the Contracting Officer.

c. Final invoice shall be accompanied by Final Release Form. If the contractor is incorporated, the release shall contain the corporate seal. An officer of the corporation shall sign the release and the corporate secretary shall certify the release.

d. Updated schedule if not already submitted per Section 01 32 17.05 20.

e. Contractor Safety Self Evaluation Checklist (original).

f. Monthly Work-hour Report.

g. Solid Waste Disposal Report.

1.5.2 Submission of Invoices Using Wide Area Workflow

Invoices shall be processed according to the guidance submitted within each task order placed under this contract. Specific invoicing instructions as required by NFAS 5252.232-9301 will be provide in each task order implementing DFARS 252.232-7003 Electronic Submission of Payment Requests (March 2008) using Wide Area Work Flow (WAWF).

To comply with the clause 252.232.7003, Electronic Submission of Payment Requests (March 2008), the contractor is required to register for WAWF at https://wawf.eb.mil/.

WAWF training is available from the WAWF main web site, or directly at: http://www.wawftraining.com. WAWF questions should be directed to the WAWF helpdesk at 866-618-5988.

a. Invoices not completed in accordance with contract requirements will be returned to the Contractor for correction of the deficiencies.

b. Final invoices not accompanied by Final Release Form will be considered incomplete and will be returned to the Contractor.

1.6 PAYMENTS TO THE CONTRACTOR

Payments will be made on submission of itemized requests by the Contractor which comply with the requirements of this section, and will be subject to reduction for overpayments or increase for underpayments made on previous payments to the Contractor.

a. Basis for Contracting Officer's consideration to allow progress payment for material delivered on the site (but not installed) and for completed preparatory work, as authorized under FAR 52.232-5(b), shall be (1) major high cost items and (2) long lead special order items. Materials that will not be paid for prior to installation include, but are not limited to, bulk quantities such as nails, fasteners, conduits, gypsum board, etc. In the request for progress payment, such items shall be specifically identified in the Contractor's estimates of work submitted for the Contracting Officer's approval in accordance with paragraph entitled "Schedule of Prices" above. At the time of invoicing, the amount billed shall be supported by documents establishing its value. A 10% retainage may be made for materials delivered to the site but not installed.

1.6.1 Payment for Materials Off Site

Payments may be made to the Contractor for materials stored off construction sites under the following conditions:

a. Conditions described in the paragraph entitled "Payments to the Contractor";

b. Material is stored on the Island of Guam;

c. Materials adequately insured and protected from theft and exposure;

d. Materials not susceptible to deterioration or physical damage in storage or in transit to the job site are acceptable for progress payments. Items such as steel, machinery, pipe and fittings, and electrical cable are acceptable; items such as gypsum wallboard, glass, insulation, and wall coverings are not;

e. Materials in transit to the job site or storage site are not acceptable for payment; and

f. Conditions specified.

PART 2 PRODUCTS

Not used.

PART 3 EXECUTION

Not used.

-- End of Section --

SECTION 01 30 00.05 20

ADMINISTRATIVE REQUIREMENTS FOR DESIGN-BUILD

PART 1 GENERAL

1.1 REFERENCES

The publications listed below form a part of this specification to the extent referenced. The publications are referred to within the text by the basic designation only.

AMERICAN NATIONAL STANDARD INSTITUTE

Z308.1-1998	Minimum Requirements for Workplace First-aid Kits

U.S. NATIONAL ARCHIVES AND RECORDS ADMINISTRATION (NARA)

15 CFR 772	Definition of Terms
29 CFR §1910, et seq. 29 CFR 1910.142	Occupational Health & Safety Standards Temporary Labor Camps
29 CFR 1926 §	Safety & Health Regulations for Construction

GUAM CODE ANNOTATED (G.C.A.)

10 G.C.A. §§ 20 -54	Environmental Health
10 G.C.A. §§ 55 -79	Public Safety
10 G.C.A. §§ 84 – 96	Guam Public Health Act
10 G.C.A. §§ 21	Sanitary Permit
10 G.C.A. §§ 23, P.L 25-15	Eating and Drinking Establishments
10 G.C.A. §§ 24	Food Establishments
10 G.C.A. §§ 40	Guam Food, Drug and Cosmetic Act
16 G.C.A. §§ 1101, et seq.	VEHICLES
21 G.C.A. §§ 1, et seq.	Real Property
22 G.C.A. § 7	Guam Employment Service Law

GUAM ADMINISTRATIVE RULES AND REGULATIONS (G.A.R.)

25 G.A.R. § 6	Guam Board of Nurse Examiners
25 G.A.R. § 11	Guam Board of Medical Examiners
26 G.A.R. §§ 4401, et seq.	Health Certificate Regulations

26 G.A.R. §§ 6200, et seq. Ambulance and Emergency Medical Technician

GOVERNMENT OF GUAM – DEPARTMENT OF PUBLIC HEALTH AND SOCIAL SERVICES

Guidebook: Rules & Regulation Pertaining to Eating and Drinking Establishments (GovGuam/DPHSS)

Guidebook: Rules & Regulations Pertaining to Retail Food Store Sanitation (GovGuam/DPHSS)

1.2 SUBMITTALS

The use of a "G" following a submittal indicates that a Government approval action is required. Submit the following in accordance with Section 01 33 10.05 20 DESIGN SUBMITTAL PROCEDURES and Section 01 33 00.05 20 CONSTRUCTION SUBMITTAL PROCEDURES.

SD-01 Preconstruction Submittals

Insurance; G

Permits; G

Licenses; G

Pre-deployment Medical Screening Certification; G

Self-furnished Medical Facility Certification (as applicable); G

1.3 CONTRACTOR WORKFORCE LOGISTICS AND MATERIAL MANAGEMENT REQUIREMENTS

For the purposes of this specification, the term, “temporary resident worker” means workers that include, but are not limited to, H-2B, unskilled laborers, apprentices, skilled craft workers, non-supervisory equipment operators, janitorial workers, non-supervisory dining service workers, non-supervisory transportation workers, who have not established a permanent residence on Guam.

“Temporary resident worker” does not include:

a. Permanent residents of Guam
b. Managers and supervisors
c. Those, other than H-2B workers, who have made arrangements for housing on Guam.

Contractors shall validate that workers who will not be residing in the Contractor’s workforce housing facilities have secured other housing arrangements and that the housing facilities comply with the GovGuam regulations.

For the purpose of this specification, the term, “worksites” means locations at Finegayan, Naval Base, and Andersen Air Force Base.

For the purpose of this specification, the term, “peak hours” for traffic means 6:30 a.m. to 8:30 a.m. and 4 p.m. to 6 p.m.

1.3.1 Housing

All temporary resident workers are required to reside in the Contractor's workforce housing facilities and the Contractor shall effect appropriate contractual agreements with its workers and/or workers' representatives that require such workers to reside in the Contractor furnished housing as a condition of hire and/or employment. Provide secure, adequate, clean, and healthy housing in accordance with 29 CFR 1910.142 and all statutes and regulations of the U.S Federal Government and/or the Government of Guam in effect on the date of award of this contract or thereafter promulgated by the aforementioned governmental authorities. Under no circumstances shall equipment, appliances, food and/or beverages, firearms, weapons or other substances controlled or prohibited under U.S. Federal or GovGuam laws, rules or regulations be permitted to be used, stored or temporarily occupy housing facilities furnished under this specification. Contractors, subcontractors and their workers found to be in violation of the aforementioned prohibition will be prosecuted to the fullest extent of the law and serious or repeated violations may result in termination of this contract for default. This prohibition does not apply to moderate and responsible use of alcohol within resident housing facilities that is purchased at private expense and for personal consumption only.

Obtain all permits, licenses or other authority required by the statutes and regulations of the U.S Federal Government and/or the GovGuam to construct or otherwise furnish facilities necessary for the safe and adequate housing of the Contractor's temporary resident workers employed in the performance of the work required by this contract.

Provide a worker bulletin board at the workforce housing facility at a location that is readily visible by all workers. Include on the bulletin board (as a minimum):

a. Hotline Poster, Appendix A
b. Hotline Poster(s), Appendix A, in the worker's native language(s)
c. Notice, in English and the worker's native language(s), stating the company's procedures for filing complaints for any housing arrangement issues concerning safety, sanitation, or meals. Procedure for complaints shall have an option for the worker to be anonymous.

Telephone number, email address, and mailing address for Appendix A will be provided at the pre-construction meeting.

The Quality Control Manager (QCM) shall certify that each temporary resident worker has a contractual agreement to reside in the Contractor furnished housing as a condition of hire and/or employment. Submit a copy of the contractual agreement to the Contracting Officer with the following certifying statement:

"I hereby certify that the worker(s) identified in this submittal have a contractual agreement to reside in the Contractor furnished housing.

Certified by QC Manager _____, Date _____"

The Quality Control Manager (QCM) shall certify that each worker not residing in the Contractor furnished housing is residing in a location that complies with the GovGuam regulations. Submit the address of the worker(s) to the Contracting Officer with the following certifying statement:

"I hereby certify that the worker(s) identified in this submittal are residing at a location that complies with GovGuam regulations.

Certified by QC Manager _____, Date _____"

When a worker changes address, resubmit certification with worker's new address.

1.3.2 Food

Provide adequate, clean, healthy food supply and dining services to the Contractor's and its Subcontractors' temporary resident workers in accordance with all statutes and regulations of the U.S Federal Government and/or the Government of Guam in effect on the date of award of this contract or thereafter promulgated by the aforementioned governmental authorities. The Contractor's food supply and dining operations shall comply with all applicable references set forth in this specification and, in particular, shall be performed in accordance with the following: 29 CFR §1910, et seq. – Occupational Health & Safety Standards, 10 G.C.A. §§ 20 -54 – Environmental Health, 10 G.C.A. §§ 55 -79 – Public Safety, 10 G.C.A. §§ 84 - 96 – Guam Public Health Act, 10 G.C.A. §§ 21 – Sanitary Permit, 10 G.C.A. §§ 23, P.L 25-15 – Eating and Drinking Establishments, 10 G.C.A. §§ 24 – Food Establishments, 10 G.C.A. §§ 40 – Guam Food, Drug and Cosmetic Act, 22 G.C.A. § 7 – Guam Employment Service Law, 26 G.A.R. §§ 4401, et seq., Health Certificate Regulations, Guidebook: Rules & Regulation Pertaining to Eating and Drinking Establishments (GovGuam/DPHSS), and Guidebook: Rules & Regulations Pertaining to Retail Food Store Sanitation (GovGuam/DPHSS). To the extent practical and cost effective, take into consideration and furnish to its temporary resident workers food and beverages that are consistent with the dietary practices and preferences commonly observed in the temporary resident workers home venues. Under no circumstances shall alcoholic beverages or other substances controlled or prohibited under U.S. Federal or Government of Guam laws, rules or regulations be furnished. Contractors, subcontractors and their employees found to be in violation of the aforementioned prohibition will be prosecuted to the fullest extent of the law and serious or repeated violation may result in termination of this contract for default. This prohibition does not apply to moderate and responsible use of alcohol within resident worker housing and/or dining facilities that is purchased at private expense and for personal consumption only.

Provide dining facilities for its own and its Subcontractors' workforce consistent with the work schedules and nutritional needs of its employees. To the extent practical and cost effective, locate dining facility within, contiguous to or within reasonable walking distance from Contractor furnished housing facilities. At a minimum, furnish meals and make the dining facilities available to the temporary resident workers for pre-work (morning) and post-work (evening) meals. Extend or adjust meal service and dining facility operating hours to accommodate the work schedules including multiple work shifts or non-standard work shifts. Provide mid-workday meals to the worksite. During weekend, holiday or other Government directed non-workdays, furnish meals for the temporary resident workers in the same manner and of the same quality as for work days; except that, mid-day meals shall be served in the Contractor's dining facilities.

Ensure sufficient quantities of non-perishable food and water supplies are

available to sustain the basic nutritional needs of its workforce during emergency events. For planning and acquisition purposes, assume normal supply chain operations will be unavailable for a period of five (5) days after an event. At the direction of Contracting Officer, the Contractor shall implement its emergency event plan.

1.3.3 Medical

Assure that its and its subcontractors at all tiers hiring, staffing, personnel assignment and other human resources practices result in development and maintenance of a healthy contractor and subcontractor workforce employed in the performance of this contract in accordance with all statutes and regulations of the U.S Federal Government and/or the Government of Guam in effect on the date of award of this contract or thereafter promulgated by the aforementioned governmental authorities. In particular, the Contractor and its Subcontractors health care activities shall be performed in accordance with 10 G.C.A. §§ 84 - 96 – Guam Public Health Act, 25 G.A.R. § 6 – Guam Board of Nurse Examiners, 25 G.A.R. § 11 – Guam Board of Medical Examiners, 26 G.A.R. §§ 4401, et seq., Health Certificate Regulations, and 26 G.A.R. §§ 6200, et seq., Ambulance and Emergency Medical Technician.

Perform worker pre-deployment physical condition and general health screening for all workers equal to GovGuam pre-employment standards and requirements prior to their departure to Guam. At a minimum, said screening shall include a tuberculosis test, chest x-ray and medical evaluation, blood pressure, dental exam, and other medical tests as necessary to ensure that each worker’s health status prior to deployment to Guam for work on this Government contract is adequate for performance of the activities to which the worker will be assigned giving consideration to the climatic and other physical elements to be experienced on Guam. Submit to the Guam Department of Health and Social Services evidence of satisfactory completion of the pre-deployment screening certified by a licensed health screening provider. This requirement shall not apply to managerial, specialized technical and administrative contractor and subcontractor employees and consultants visiting Guam for business purposes for periods of fourteen (14) calendar days or less.

As set forth set forth elsewhere in this contract, the Contractor including Subcontractors at all tiers shall provide and maintain throughout the contract period of performance such Worker’s Compensation and liability insurances as required by the laws, regulations and rules of the U.S. Government and the Government of Guam. In addition, each Contractor and Subcontractor employee and consultant deployed to work on Guam for a period in excess of fourteen (14) calendar days shall be covered by either commercially purchased health and medical care insurance or a Contractor self-furnished health and medical facilities for the entire duration of the employee’s or consultant’s deployed assignment. Contractor and Subcontractor employment contracts/agreements with employees and consultants shall provide for mandatory employee and consultant acceptance of the Contractor’s insurance plan coverage and/or use of the Contractor furnished medical facilities. To the extent possible and cost effective, take into consideration of purchasing insurance and health care from established and reputable agencies rather than providing your own health care. The minimum insurance plan coverage and/or medical facilities furnished by the Contractor shall be as follows:

a. Emergency Medical Care - initial outpatient treatment, including related diagnostic service, of the sudden and unexpected onset of a medical condition which has severe symptoms. If immediate medical attention is not obtained, the symptoms could result in serious and permanent medical consequences. Examples of such symptoms are severe chest pains, convulsions or persistent, severe abdominal pains.

b. Primary Health Care - services typically included represent the full spectrum of organizations which provide care services to the population of focus. The services should include care for chronic diseases, preventive and screening services, and acute care delivery in the outpatient setting; as well as health promotion services delivered through an inter-professional team.

c. Prescription Drugs - drugs or medicines that require a doctor's signature to dispense and are approved by the U.S.F.D.A. for use in treating the sickness or injury for which they are prescribed.

The Contractor’s Health Care and Medical Services Management Plan shall provide a detailed description of its method of compliance with U.S. Government and Government of Guam Occupational Health & Safety Administration (OSHA) standards and requirement (29 CFR §1910, et seq. – Occupational Health & Safety Standards) to include its intended use of existing on-island medical facilities plus any additional facilities it intends to construct or for which it will assume operational responsibility. Provide emergency medical care at the worksites during all work operations in accordance with the aforementioned plan. At any time that the Contractor’s and its Subcontractor’s aggregate workforce at any site exceeds 50 persons, provide at least one supervisory level worker who has received and been certified in basic first aid training and cardio-pulmonary resuscitation (CPR). During any time that the Contractor’s and its Subcontractor’s aggregate workforce at any site exceeds 200 persons, provide at least one (1) certified Emergency Medical Technician (EMT). CPR equipment and first aid kits conforming to American National Standard Institute (ANSI) Z308.1-1998 "Minimum Requirements for Workplace First-aid Kits" (Type III at a minimum) shall be readily available at the worksite during all operations irrespective of the number of persons performing work activities. The Contractor’s method for satisfying the aforementioned requirements, including compliance with all health care and medical services licenses and certifications in accordance with U.S. Government and Government of Guam regulations and rules, shall be documented in its Health Care and Medical Services Management Plan prior to commencing work.

1.3.4 Safety & Security

For each non-U.S. citizen perform an individual background check that includes both a U.S. National Agency Check and an equivalent background check in the individual’s home venue. Submit the results of the background check to the cognizant U.S. Government security office for approval prior to deployment to Guam. Provide written assurance that a criminal background check has been completed for each employee and none have any of the following disqualifiers:

a. Previously barred from entry/access to any military installation or facility.
b. Wanted by law enforcement authorities, regardless of offense/violation, (i.e., an "order to arrest" has been issued by a judge).
c. Conviction of firearms or explosives violation.
d. Incarcerated for 12 months or longer within the past three years, regardless of offense/violation.
e. Conviction of espionage, sabotage, treason or terrorism, murder, sexual assault, armed assault/robbery, rape, child molestation, drug possession with intent to sell, or drug distribution.
f. Name appears on any agency's "watch list" or "hit list" for criminal behavior or terrorist activity.

Include as a minimum:

a. Employee's Name
b. Alien Registration Number
c. Social Security Number
d. Passport Number
e. Date Of Birth
f. Country Of Birth
g. Name, address, and telephone number of agency that conducted criminal background check
h. List of agencies (national police records, local law enforcement records, etc.) that were contacted to conduct background check

Ensure all personnel receive and acknowledge receipt of a safety, security and anti-terrorism briefing the content of which shall be consistent with inherent safety, security and anti-terrorism requirements of the project(s) to which the person will be assigned. The content of the personnel briefing for each project shall be approved by the cognizant U.S. Government security office for approval. Updated and refresher safety, security and anti-terrorism briefings will be conducted as directed by the Government.

1.3.5 Transportation

Provide safe, secure and adequate transportation services for temporary resident workers from/to temporary resident worker housing facilities and work sites to accommodate work schedules including multiple work shifts or non-standard work shifts. In addition, the Contractor shall provide transportation and hauling services for all equipment and material needed for performance of this contract. Work performed hereunder shall comply in all respects with all statutes and regulations of the U.S Federal Government and/or the Government of Guam in effect on the date of award of this contract or thereafter promulgated by the aforementioned governmental authorities. In particular, the Contractor’s and its Subcontractors at all tiers workforce transportation services shall be performed in accordance with 29 CFR §1910, et seq. – Occupational Health & Safety Standards, 29 CFR 1926 § - Safety & Health Regulations for Construction, 10 G.C.A. §§ 55 -79 – Public Safety and 16 G.C.A. §§ 1101, et seq. – VEHICLES.

Ensure necessary vehicle inspection(s) and registration as well as operator licenses and permits are obtained and maintained current throughout the performance of this contract in accordance with all statutes, rules and regulations of the U.S Federal Government and/or the Government of Guam as are in effect on the date of award of this contract or thereafter

promulgated by the aforementioned governmental authorities. Provide appropriate training for all vehicle equipment operators and their supervisory personnel with regards to vehicle operation, personnel transportation, prescribed worker transportation and safety.

1.3.6 Material Management

Obtain from the Government of Guam the necessary permits for vehicles classified as Class 4, Class 6 to 13 and Class 5 with GVWR greater than 20,000 lbs. traveling on public roads. Schedule travel during off peak hours. Coordinate these vehicle movements at the worksites with the Contracting Officer. Provide the necessary safety and security requirements for the movement of the materials and equipment at the worksites and public roads.

Limit the movement of vehicles classified as Class 4, Class 6 to 13 and Class 5 with GVWR greater than 20,000 lbs. from the port to the following routes:

Northern portion of Guam:	Route 11 to 1 to 8 to 16 to 27 to 1 and to 3. Route 11 to 1 to 8 to 16 to 27 to 1 and to 9.
Southern portion of Guam:	Route 11 to 1.

Limit the movement of vehicles classified as Class 4, Class 6 to 13 and Class 5 with GVWR greater than 20,000 lbs. from the quarries to the following routes:

Northern portion of Guam:	Chalan Lujuna Road to Route 1 to 3. Chalan Lujuna Road to Route 1 to 9.
Southern portion of Guam:	Chalan Lujuna Road to Route 1 to 27 to 16 to 8 to 1.

Ensure necessary vehicle and equipment inspection(s) and registration as well as operator licenses and permits are obtained and maintained current throughout the performance of this contract in accordance with all statutes, rules and regulations of the U.S Federal Government and/or the Government of Guam as are in effect on the date of award of this contract or thereafter promulgated by the aforementioned governmental authorities. Provide appropriate training for all vehicle and equipment operators and their supervisory personnel with regards to vehicle/equipment operation and safety.

1.4 MINIMUM INSURANCE REQUIREMENTS

Procure and maintain during the entire period of performance under this contract the following minimum insurance coverage:

a. Comprehensive general liability: $500,000 per occurrence

b. Automobile liability: $200,000 per person, $500,000 per occurrence for bodily injury, $20,000 per occurrence for property damage

c. Workmen's compensation as required by Federal and State workers' compensation and occupational disease laws.

d. Employer's liability coverage of $100,000, except in States where workers compensation may not be written by private carriers,

e. Others as required by the Government of Guam.

1.5 CONTRACTOR PERSONNEL REQUIREMENTS

1.5.1 Subcontractor Special Requirements

Furnish a list of contact personnel of the Contractor and subcontractors including addresses and telephone numbers for use in the event of an emergency. As changes occur and additional information becomes available, correct and change the information contained in previous lists.

1.5.1.1 Asbestos Containing Material

All contract requirements of PART 4, F20 SELECTIVE BUILDING DEMOLITION, assigned to the Private Qualified Person (PQP) shall be accomplished directly by a first tier subcontractor.

1.5.1.2 HVAC TAB

All contract requirements of TAB work required by PART 4 D30, HVAC, shall be accomplished directly by a first tier subcontractor. No TAB work required by PART 4, D30, HVAC, shall be accomplished by a second tier subcontractor.

1.5.1.3 Qualified Testing Organization

All contract requirements of work required to be performed by a Qualified Testing Organization in PART 4, D50 ELECTRICAL and G40 SITE ELECTRICAL UTILITIES, shall be accomplished directly by a first tier subcontractor. No work to be performed by a Qualified Testing Organization, required by PART 4, D50 and G40 shall be accomplished by a second tier subcontractor.

1.5.1.4 Identification Badges

Identification badges, if required, will be furnished without charge. Application for and use of badges will be as directed. Immediately report instances of lost or stolen badges to the Contracting Officer.

1.6 SUPERVISION

Have at least one qualified supervisor capable of reading, writing, and conversing fluently in the English language on the job site during working hours. In addition, the Quality Control (QC) representative shall also have fluent English communication skills.

1.6.1 ELECTRONIC MAIL (E-MAIL) ADDRESS

The Contractor shall establish and maintain electronic mail (e-mail) capability along with the capability to open various electronic attachments in Microsoft, Adobe Acrobat, and other similar formats. Within 10 days after contract award, the Contractor shall provide the Contracting Officer a single (only one) e-mail address for electronic communications from the Contracting

Officer related to this contract including, but not limited to contract documents, invoice information, request for proposals, and other correspondence. The Contracting Officer may also use email to notify the Contractor of base access conditions when emergency conditions warrant, such as typhoons, terrorist threats, etc. Multiple email address will not be allowed.

It is the Contractor's responsibility to make timely distribution of all Contracting Officer initiated e-mail with its own organization including field office(s). The Contractor shall promptly notify the Contracting Officer, in writing, of any changes to this email address.

1.6.2 LEVEL I ANTI-TERRORISM TRAINING

Contractor shall ensure all employees working under federal contracts receive the Level I Anti-terrorism training. The Contractor shall submit a letter certifying all of the employees have received this training, when it was completed and that procedures are in place to ensure any new employees will receive the training within 30 days of being hired. On line Level 1 Anti-terrorism training is available at https:/atlevel1.dtic.mil/at/. Contractor shall maintain copies of employees' certificates of completion.

1.7 WAIVER FOR WORKER'S COMPENSATION

N/A

1.8 AMERICAN PREFERENCE POLICY

N/A

1.9 AVAILABILITY OF CADD DRAWING FILES

After award and upon request, the electronic "Computer-Aided Drafting and Design (CADD)" drawing files, when available, will be provided to the Contractor for use in preparation of construction drawings and data related to the referenced contract subject to the following terms and conditions.

Data contained on these electronic files shall not be used for any purpose other than as a convenience in the preparation of construction drawings and data for the referenced project. Any other use or reuse shall be at the sole risk of the Contractor and without liability or legal exposure to the Government. The Contractor shall make no claim and waives to the fullest extent permitted by law, any claim or cause of action of any nature against the Government, its agents or sub consultants that may arise out of or in connection with the use of these electronic files. The Contractor shall, to the fullest extent permitted by law, indemnify and hold the Government harmless against all damages, liabilities or costs, including reasonable attorney's fees and defense costs, arising out of or resulting from the use of these electronic files.

These electronic CADD drawing files are not construction documents. Differences may exist between the CADD files and the corresponding construction documents. The Government makes no representation regarding the accuracy or completeness of the electronic CADD files, nor does it make representation to the compatibility of these files with the Contractors hardware or software. In the event that a conflict arises between the signed and sealed construction documents prepared by the Government and the furnished CADD files, the signed and sealed construction documents shall

govern. The Contractor is responsible for determining if any conflict exists. Use of these CADD files does not relieve the Contractor of duty to fully comply with the contract documents, including and without limitation, the need to check, confirm and coordinate the work of all contractors for the project.

If the Contractor uses, duplicates and/or modifies these electronic CADD files for use in producing construction drawings and data related to this contract, all previous indicia of ownership (seals, logos, signatures, initials and dates) shall be removed.

1.10 CLEANUP

Leave premises "broom clean." Clean interior and exterior glass surfaces exposed to view; remove temporary labels, stains and foreign substances; polish transparent and glossy surfaces; vacuum carpeted and soft surfaces. Clean equipment and fixtures to a sanitary condition. [Clean] [Replace] filters of operating equipment. Clean debris from roofs, gutters, downspouts and drainage systems. Sweep paved areas and rake clean landscaped areas. Remove waste and surplus materials, rubbish and construction facilities from the site.

1.11 NATURAL RESOURCE CONSERVATION

The Contractor shall implement an education/informational program on natural resource conservation and provide training of its workers employed in the performance of this contract in accordance with all statutes and regulations of the U.S. Government and/or the Government of Guam in effect on the date of award of this contract or thereafter promulgated by the aforementioned governmental authorities.

PART 2 PRODUCTS

Not used.

PART 3 EXECUTION

Not used.

-- End of Section --

SECTION 01 31 19.05 20

POST AWARD MEETINGS
11/07

PART 1 GENERAL

1.1 SUMMARY

This document includes post-award requirements for project kickoff and subsequent design and preconstruction meetings.

1.2 SUBMITTALS

The use of a "G" following a submittal indicates that a Government approval action is required. Submit the following in accordance with Section 01 33 10.05 20 DESIGN SUBMITTAL PROCEDURES.

SD-01 Preconstruction Submittals

Design Submittal Packaging Proposal: G

Project Schedule: G

Performance Assessment Plan (PAP); G

Design Presentation Concept Site and Floor Plans; G

CDW Facilitator Experience Resume; G

CDW Preliminary Concept Design; G

CDW Basis of Design with Cost Estimate; G

CDW Concept Design Report; G

1.3 POST AWARD KICKOFF MEETING

The Post Award Kickoff (PAK) meeting is made up of Contract Administration, Concept Design Presentation/Design Development or Concept Design Workshop (CDW), Partnering, and Scheduling. If mutually beneficial to the Contractor and the Government, these four elements may be addressed in a single meeting or multiple meetings.

1.3.1 PAK Meeting Schedule and Location

Within 21 calendar days after contract or task order award or a time period mutually agreed upon by both parties, and prior to commencing work, meet with the Contracting Officer for the PAK meeting(s). The meeting shall be located at a specific time and place to be determined by the Contracting Officer.

1.3.2 PAK Meeting Outcomes

The meeting(s) outcomes are:

a. Integrate the Contractor and all client representatives into the project team.

b. Achieve consensus from the project team on any issues and concerns with the Contractor's technical proposal and the User’s functional requirements. Confirm the design is within the project budget.

c. Establish and explain policies and procedures for completion of a successful project.

d. Establish clear lines of communication and points of contact for Government and Contractor team members.

e. Obtain an acceptable conceptual design including floor and site plans, signed by the client, Contractor and other key team members.

f. Establish project design schedule, design submittal packaging, and preliminary construction schedule in accordance with UFGS Section 01 32 17.05 20, Network Analysis Schedule (NAS) for Design-Build. Discuss design milestones and events that should be included in the Quality Control Communication Plan.

g. Establish clear expectations for facility turnover.

h. Establish procedure for design packages reviews, Contractor’s resolution to comments, and Government’s role in review of packages.

i. Establish clear expectations for the Concept Design Workshop.

1.3.3 PAK Meeting Contractor Attendees

The following Contractor key personnel shall attend the PAK: Project Manager, Project Scheduler, Lead Designer-of-Record (DOR), Design Staff responsible for each architectural/engineering discipline when facility design is discussed, Superintendent, QC Manager, and the Commissioning Authority. Optional attendees include: Principal, Assistant Project Manager, major subcontractors and specialized supplemental QC personnel.

1.3.4 Contract Administration

Contract administration roles and responsibilities will be addressed.

1.3.5 Design Presentation/Development

The Contractor shall lead discussions to develop an understanding of the accepted technical proposal and conduct working sessions to further develop the approved conceptual site, floor plans, and building elevation. The Contractor shall anticipate that Users represented at the Design Presentation will provide additional functional information. At the end of the Design Presentation the Contractor shall provide either assurance that the updated design can be built with-in the budget or identify potential cost modification items and establish a follow-on Design Presentation Meeting to finalize a design that will include trade-offs to bring the project within the budget.

1.3.5.1 Design Presentation/Development Contractor Meetings Attendees

The following Contractor key personnel shall attend the Design Presentation: Project Manager, Project Scheduler, Cost Estimator, Lead Designer of Record, Design Staff responsible for each architectural/engineering discipline when facility design is discussed, Major Subcontractors, and DQC.

1.3.6 Concept Design Workshop (CDW)

Provide as specified in Appendix 01 31 19.05 20-1, CONCEPT DESIGN WORKSHOP.

1.3.6.1 CDW Meeting Attendees

The following Contractor key personnel shall attend the CDW: Project Manager, Project Scheduler, Cost Estimator, Lead Designer of Record, Design Staff representing each architectural/engineering discipline and Major Subcontractors when facility design is discussed, Superintendent, QC Manager, and DQC.

1.3.7 Partnering

LEVEL A PARTNERING: Per task order requirements, the Contractor shall conduct partnering sessions with key personnel of the project team, including Contractor's personnel and government personnel. The partnership will draw on the strength of each organization in an effort to achieve a quality project done right the first time, within budget, on schedule, and without any safety mishaps.

To most effectively accomplish this contract, the Government requires the formation of a cohesive partnership with the Contractor and its subcontractors. Key personnel, including the client who will occupy the facility, principal individuals from NAVFAC (Echelon III and/or IV), PWD FEAD, PM&E Branch, Construction Manager (CM)/ Resident Officer in Charge of Construction (ROICC), the project sponsor, and representative(s) of the facility owner will be invited to participate in the partnering process. Key members of the prime and subcontractors teams, including senior management, must participate.

The Contractor shall pay all costs associated with the partnering effort including facilitator, meeting room and other incidental items. Before the partnering session, the contractor shall coordinate with the facilitator requirements for incidental items (audio-visual equipment, two easels, flipchart paper, colored markers, note paper, pens/pencils, colored flash cards, etc.) and have these items available at the partnering session. The contractor will copy documents for distribution to all attendees. The participants shall bear their own costs for meals, lodging and transportation associated with partnering.

a. The Initial Partnering Session shall be a duration of one day minimum located at a place off base as agreed to by the partners. May take place concurrently with the PAK Meeting with Contractor’s Participants to include those listed in paragraph “PAK Meeting Attendees”. The Contractor shall provide a Facilitator who is experienced in conducting Partnering Workshops. The Facilitator is responsible for leading the team in a timely manner and making sure that issues are identified and resolved. The Facilitator shall be acceptable to the CM/ROICC.

b. The Follow on Partnering Session(s) generally lasts a half day or less and is encouraged to utilize electronic means to expedite meetings. Meetings may be held at a location off Base, at the project site, or in a Government Facility on Base. Schedule quarterly meetings and may be held concurrently with other scheduled meetings, such as QC meetings. Participants may be only those required to resolve current issues. No facilitator required unless desired by the partners.

LEVEL C PARTNERING: To most effectively accomplish this contract, the Government requires the formation of a cohesive partnership with the Contractor and its subcontractors. The partnership will draw on the strength of each organization in an effort to achieve a quality project done right the first time, within budget, on schedule, and without any safety mishaps.

This level of partnering discusses partnering concepts and benefits and should become a part of the preconstruction conference. The senior ROICC and senior Contractor persons present will jointly host the partnering sessions. The partners will determine the frequency of the follow-on sessions. Partnering sessions should be held at or near the location of the ROICC office.

Note: Unless otherwise specified in the task order, Level A Partnering are required for projects $10M and over. Level C Partnering are required for projects under $10M.

1.3.7.1 Performance Assessment Plan (PAP)

The Performance Assessment Plan (PAP) shall be used to document design innovation and budget management, provide performance feedback to the Contractor, and as a basis for interim and final evaluations in the Construction Contractor Appraisal System (CCASS) on-line database.

It is the intent of the Government to establish the PAP based on tangible, measurable indicators of outstanding contractor performance, and on commitments made in the Contractor's proposal. The initial PAP may be found on the NAVFAC Design-Build Request for Proposal Website in RFP PART 6 Attachments. Review and finalized the initial PAP during the Partnering Session. During the initial Partnering Session, the Government, the Contractor, the Designer-of-Record, and the Client will establish the PAP. Following the establishment of the PAP, the Contractor will present it, with his input, for update and discussion at projects meetings which discuss project performance. Submit an updated PAP on a monthly basis with the invoice for that period as a minimum.

1.3.8 Project Schedule

Provide in accordance with Section 01 32 17.05 20 NETWORK ANALYSIS SCHEDULES (NAS) FOR DESIGN-BUILD.

1.4 DESIGN QUALITY ASSURANCE MEETINGS

After Government Quality Assurance (QA) of each Design Submittal has been completed, meet with the Government for a one-day conference to discuss review comments for the specific design submittal.

Provide consolidated copies of all Government comments with annotations of Contractor's action beside them. Notify the Contracting Officer in writing within five (5) days after receipt of Government's comments if the Contractor disagrees with comments technically or interprets comments to exceed the requirements of the contract.

1.4.1 Design QA Meeting Attendees

The following Contractor key personnel shall attend the design QA meetings: Project Manager, QC Manager, Commissioning Authority, and Contractor's Design Staff (architect and engineering disciplines related to topics to be discussed).

1.4.2 Design QA Meeting Location

Meetings shall be located at the office of the Contracting Officer's QA Team or may be conducted at other locations or by other electronic means if mutually acceptable to all parties.

1.4.3 Minimum Design QA Meeting Agenda

Address all Government comments that are unresolved and present clarification or supporting information requested by the Contracting Officer's QA team during the previous meeting.

1.5 PRECONSTRUCTION MEETING

Meet with the Contracting Officer to discuss construction items of concern to the Government and the Contractor such as outages, storage, trailer location, disposal of construction debris, and safety, at a location to be determined by the Contracting Officer. The Preconstruction meeting may take place with the PAK meeting or at any time prior to mobilization and before any construction work begins.

1.6 RECURRING MEETINGS

1.6.1 Quality Control and Production Meetings in accordance with UFGS Section 01 45 00.05 20, Design and Construction Quality Control

1.6.2 Safety Meetings in accordance with Section 1 01 35 26, Safety and Occupational Health Requirements.

1.7 FACILITY TURNOVER PLANNING MEETINGS (NAVFAC Red Zone - NRZ)

Key personnel will meet to identify strategies to ensure the project is carried to expeditious closure and turnover to the Client. Start the turnover process at the PAK Meeting and convene the Facility Turnover Meetings once the project has reached approximately 75% completion or three to six months prior to Beneficial Occupancy Date (BOD), whichever comes first. The Contracting Officer’s Representative will lead the meetings and guide the discussions based on an agenda provided by the Government. The Facility Turnover effort shall include the following:

a. PAK Meeting - Contracting Officer’s Technical Representative (COTR) will provide the NRZ Checklist and the Contractor, Client, and NAVFAC Representatives will compare Contractor’s schedule to NRZ Checklist to

ensure all Contractor Checklist Items are included in the schedule and to discuss the scheduling impact of Client and NAVFAC Checklist Items.

b. Facility Turnover Meetings –

1. Fill in the NRZ Checklist including Contractor, Client, and NAVFAC Checklist Items and assigned a person responsible for each item and a due date. The Contracting Officer’s Representative will facilitate the assignment of responsibilities and fill out the NRZ Checklist.

2. Review the Contractor’s updated schedule. The Contractor shall develop a POAM for the completion of all Contractor, Client, and NAVFAC Checklist items.

3. Confirm that all NRZ Checklist items will be completed on time for the scheduled Facility Turnover.

1.7.1 Facility Turnover Meeting Attendees

The following key personnel shall attend the Facility Turnover Meetings: Contractor QC Manager, Design Quality Control Manager, Superintendent, Major Subcontractors, Designer-of-Record, Contracting Officer’s Representative, Project Sponsor, Representative(s) of NAVFAC, the Facility Owner, and the Client.

PART 2 PRODUCTS

Not Used.

PART 3 EXECUTION

Not Used.

Appendix 01 31 06-1
CONCEPT DESIGN WORKSHOP (CDW)

Provide the following information:

a. CDW Facilitator Experience Resume
b. CDW Preliminary Concept Design
c. CDW Basis of Design with Cost Estimate
d. CDW Concept Design Report

1. General

1.1 Methodology. A Concept Design Workshop will be conducted per task order requirements. This effort will examine project functions and requirements, quality and life safety costs, analyze alternate design concepts, expose and resolve project issues, and develop the final conceptual design.

1.2 Facilitator. The Contractor will provide a Facilitator who is experienced in conducting Concept Design Workshops. He or she will be responsible for leading the team in a timely manner, making sure that issues are pursued and resolved to the maximum extent possible, documenting meetings, organizing the design concept documents for on-site approval, and providing the Concept Design Workshop Report.

1.3 Contractor's Design Team. The primary functions of the Design Team will be to investigate, develop and present alternate design solutions. The entire Design Team will participate in all phases of the Concept Design Workshop effort and provide assistance to the Facilitator in development of the Concept Design Workshop Report, including most of the required documentation.

1.4 Concept Design Workshop Report. Produced almost entirely on-site, the Concept Design Workshop Report will summarize the final conceptual design.

1.5 Award Amount. At each contract stage, the Contractor shall verify that the concept is within the contract award amount.

2. Procedure

2.1 Preliminary Work. The Contractor's Design Team shall complete the following prior to the on-site workshop:

a. Review the contract documents and references explaining the project scope and history.

b. At the Post Award Kickoff meeting, the User(s) makes a presentation of their functional requirements.

c. Prepare and submit, at least 14 days in advance of the Concept Design Workshop, 15 copies of a preliminary concept design (Concept #1), a Basis of Design, and a statement that the concept provided is within the award amount.

d. Make arrangements for and provide an appropriate conference room convenient to the project site and/or Users for use by the Design Team and government participants during the workshop.

e. Incorporate government comments in a revised Concept #1 and produce at least 20 copies of the revised Concept #1 documents for distribution at the workshop.

f. Facilitator conducts meeting with NAVFAC representatives before the Concept Design Workshop to review preparations, relationships, and the status of work to be accomplished.

2.2 On-Site Workshop. The Design Team shall accomplish the following items during the on-site phase of the Concept Design Workshop. (Typically conducted in four to six working days, minimizing breaks so as to maintain momentum. The Design Team should expect longer than normal workdays.)

a. On the first day of the workshop, meet with the using activity, Station and other Government representatives. The Facilitator will describe the Concept Design Workshop process and review the workshop agenda. The user(s) will provide a functional presentation. This is to reiterate to all participants the User(s) needs and desires. The intent is to make the design solution and issue resolution function-oriented.

b. Present the revised Concept #1 and respond to questions.

c. Participate in a comment/creative session to generate ideas to improve this project in the areas of function, quality and total life cycle cost, issue resolution and sustainable design within the award amount. It is often helpful to request User comments in writing so they may be considered, responded to, and presented at subsequent presentations.

d. Create a new concept design. Design concepts shall include drawings, sketches, and other graphics as necessary to fully describe the concept. Prepare at least 20 copies for distribution at all presentations.

e. Repeat applicable steps as necessary. Usually, three concepts are required. The final concept must be within the contract award amount.

f. The final concept shall include the following:

(1) Site Plan: Show the layout of the proposed facility in relation to major landmarks. Show all buildings, access roads, parking, pedestrian walkways, roads, sidewalks, landscaping, and major utilities. Indicate major dimensions and orientation. Provide a building code analysis, relating the proposed building site, size, and construction type to maximum allowable limits of the International Building Code.

(2) Building Floor Plans: Provide floor plans depicting functional utilization of spaces and furniture and

equipment layout. Show room sizes or dimensions. Provide a Life Safety Code® analysis with the floor plan to identify required life safety and egress features.

(3) Perspective Sketches: Provide at least one sketch to show a perspective of major buildings. The sketch should not be elaborate but must show the proposed form and massing, colors to be used, and an indication of materials used.

(4) Mechanical Plans: Provide plans as necessary to show the essential work and intent of the design. Suggestions include equipment layouts, zones, etc.

(5) Electrical Plans: Provide plans as necessary to show the essential work and intent of the design. Suggestions include special light fixture types, locations, switching, power outlets and panelboard location. Provide electrical distribution single line diagram.

(6) Cost Estimate: Provide a statement that the concept presented can be constructed within the award amount.

(7) Basis of Design: Describe, in layman's terms, the intent of the design by discipline. Address material quality, energy efficiency and life cycle costs.

(8) Sustainable Design: Demonstrate ability to achieve LEED self-certification.

(9) System Safety Engineering

g. Prepare 20 copies of the final concept (drawings, basis of design and statement that the concept is within the award amount) for distribution at the final presentation.

h. Dependent upon the project, the Concept Design Workshop Report is provided by the Facilitator, includes all items included in the final concept design and the following:

(1) Endorsements: Include a copy of the signature/endorsement sheet.

(2) Comments: Include comments and resolutions concerning the final concept design.

(3) Executive Summary: Summarize the workshop, including how the various concepts differed and were improved during the workshop.

(4) Special Design Features: Identify and describe unique project needs and features, e.g., pile foundations, physical security, intrusion detection systems, access control, construction in humid climates, pollution abatement, tempest, HEMP, etc.

(5) Architectural Compatibility Statement: Identify architectural style, materials, and color scheme; and indicate their compatibility with installation planning and design concepts established in the Base Exterior Architectural Plan.

(6) Environmental Summary: Provide a summary of environmental issues, listing completed actions and items requiring further coordination, waivers or permits.

(7) Supporting Project Documentation: Include data to support the development of the concept design, layout, and special features. Items should include: project scope discussion, minutes of meetings, function analysis work sheets, and economic and technical analyses if alternatives evaluated.

i. Except for final comments, responses and endorsements, the final report should be completed (electronically) on site, before the final presentation. If requested by the NAVFAC Project Manager, be prepared to present up to 10 hard copies of the report at the conclusion of the workshop.

j. Conduct a "front-to-back" comprehensive presentation of the final concept. Obtain user signatures on a conceptual design endorsement sheet, signifying approval of the concept design, subject to the final comments and their resolutions agreed to at the final presentation meeting.

2.3 Concept Design Workshop Report

Within 14 calendar days of completion of the on-site Concept Design Workshop, the Design Team shall submit to the NAVFAC Project Manager an electronic copy of the Concept Design Workshop Report as one file in *.PDF format.

-- End of Section --

SECTION 01 32 16.00 20

DESIGN AND CONSTRUCTION PROGRESS DOCUMENTATION
04/06

PART 1 GENERAL

1.1 SUBMITTALS

Government approval is required for submittals with a "G" designation; submittals not having a "G" designation are for Contractor Quality Control approval. The following shall be submitted in accordance with Section 01 33 00 SUBMITTAL PROCEDURES:

SD-01 Preconstruction Submittals

Design and Construction schedule; G

1.2 DESIGN AND CONSTRUCTION SCHEDULE

Prior to the start of work, prepare and submit to the Contracting Officer for acceptance a design and construction schedule in the form of a Critical Path Method (CPM), Network Schedule in accordance with the terms in Contract Clause "FAR 52.236-15, Schedules for Construction Contracts," except as modified in this contract.

1.3 NETWORK ANALYSIS SCHEDULE (NAS)

The Contractor shall use the critical path method (CPM) to schedule and control construction activities. The Network shall have a minimum of thirty (30) construction activities. The scheduling software that will be utilized by the Government on this project is P-6 by Primavera Systems, Inc. Notwithstanding any other provision in the contract, schedules submitted for this project must be prepared using Primavera P-6. Submission of data from another software system where data conversion techniques or software is used to import into Primavera's scheduling software is not acceptable and will be cause for rejection of the submitted schedule. The schedule shall identify as a minimum:

a. Design and Construction time for all major systems and components;

b. Each activity shall be assigned its appropriate Responsibility Code;

c. Each activity shall be assigned its appropriate Phase Code;

d. Major submittals and submittal processing time; and

e. Major equipment lead time

f. Cost loading

1.3.1 CPM Submittals and Procedures

Submit all network analysis and updates in hard copy and on electronic media that is acceptable to the Contracting Officer. The network analysis system

shall be kept current, with changes made to reflect the actual progress and status of the construction.

1.4 UPDATED SCHEDULES

Update the construction schedule and equipment delivery schedule at monthly intervals or when the schedule has been revised. Reflect any changes occurring since the last update. Submit copies of the purchase orders and confirmation of the delivery dates as directed.

PART 2 PRODUCTS

Not used.

PART 3 EXECUTION

Not used.

-- End of Section --

SECTION 01 32 17.05 20

NETWORK ANALYSIS SCHEDULES (NAS) FOR DESIGN-BUILD
11/07

PART 1 GENERAL

1.1 DESCRIPTION

The Contractor is responsible for scheduling all design, procurement and construction. A single schedule shall logically incorporate all design and construction for the entire project. Unless otherwise indicated, the contractor may begin construction when design is signed, stamped and submitted to the Government via the Contractor’s quality control organization.

Design activities shall include design decision points, design submittal packages, such as site and building, as well as design submittals, such as design development and final design. Review times for design development packages shall be included in the schedule. Refer to Specification Section 01 33 10.05 20 Design Submittal Procedures, for specific requirements.

If Government approval is required for any portion of a final signed and sealed design package prior to construction, that review time shall be included in the schedule. The schedule shall also include times for procurement, Contractor quality control and construction, acceptance testing and training. Refer to Specification Section 01 33 00.05 20 Construction Submittal Procedures to determine if any items require Government approval prior to construction; if any are required, that submittal review time shall be included in the schedule.

The schedule is a tool to manage the project, both for Contractor and Government activities. It will also be used to measure progress and to evaluate time extensions. If cost-loaded, it will provide the basis for progress payments.

The Contractor shall use the Critical Path Method (CPM) and the Precedence Diagram Method (PDM) to satisfy time and cost applications. For consistency, when scheduling software terminology is used in this specification, the terms in Primavera's scheduling programs are used.

1.2 SUBMITTALS

The use of a "G" following a submittal indicates that a Government approval action is required. Submit the following in accordance with Section 01 33 10.05 20 DESIGN SUBMITTAL PROCEDURES and Section 01 33 00.05 20 CONSTRUCTION SUBMITTAL PROCEDURES.

SD-01 Preconstruction Submittals

Network Analysis Schedule (NAS);G

Final Schedule;G

SD-07 Certificates

Monthly Network Analysis Schedule Updates;G

1.3 SCHEDULE ACCEPTANCE PRIOR TO START OF WORK

Review comments made by the Government on the Contractor's schedule(s) will not relieve the Contractor from compliance with requirements of the Contract Documents. The Contractor is responsible for scheduling, sequencing, and prosecuting the Work to comply with the requirements of the Contract Documents.

The NAS must be submitted and accepted by the Government before the Contractor will be allowed to start work on the construction stage(s) of the contract.

Only bonds will be paid prior to acceptance of the Schedule. Submittal of the Network, and subsequent schedule updates, will be understood to be the Contractor's certification that the submitted schedule meets all of the requirements of the Contract Documents, represents the Contractor's plan on how the work will be accomplished, and accurately reflects the work that has been accomplished and how it was sequenced (as-built logic).

1.4 SOFTWARE

Use the scheduling software Primavera Project Planner (P-6) by Primavera Systems, Inc. Save files in Concentric P-6 format (.prx).

1.5 NETWORK SYSTEM FORMAT

The system shall include time scaled logic diagrams and specified reports.

1.5.1 Diagrams

With the exception of the Contract Award, and End Contract milestone activities, no activities will be open-ended. The diagram shall clearly show the activities of the critical path. Once an activity exists on the schedule it may not be deleted or renamed, and must remain in the logic. No more than 20 percent of the activities may be critical or near critical. Show the following information on the diagrams for each activity:

a. Activity ID

b. Activity Description

c. Original Duration in Work Days

d. Remaining duration

e. Percent Complete

f. Early Start Date

g. Early Finish Date

h. Total Float

Provide a time-scaled logic network diagrams plotted/printed in color on ANSI D sheets.

1.5.2 Schedule Activity Properties and Level of Detail

1.5.2.1 Activity Categories

a. Design Activities

b. Procurement Activities

c. Government Activities

d. Quality Management (QM) Activities

e. Construction Activities

No on-site construction activity (definable feature of work) shall have a duration in excess of 20 working days. Contractor activities will be driven by calendars that reflect Saturdays, Sundays and all Federal Holidays as non-work days, unless otherwise defined in this contract.

1.5.2.2 Contract Milestones and Constraints

a. Contract Start Date Milestones: The Contractor shall include as the first milestone and equal to the Contract Award and NTP dates.

b. Facility Turnover: The Contractor shall utilize the Facility Turnover Meetings and the NAVFAC Red Zone Checklist to determine any necessary revisions to the schedule. Coordinate with UFGS Section 01 31 19.05 20, Post Award Meetings.

c. Last Activity Milestone: The Contractor shall include "End Contract" as the last milestone and equal to the contract completion date.

d. All float calculation shall reflect positive float.

e. Early Contract Completion: If the event the Contractor's schedule shows completion prior to the contract completion date, the Contractor shall include an activity named "Contractor Early Completion". The only successor activity to this activity will be the "End Contract" milestone.

1.5.2.3 Activity Code

The Contractor shall establish a maximum of 6 activity codes, identified prior to schedule development. The activity codes allow for grouping activities for different situations and sorting, and shall be sufficient for reports and tracking for the project.

1.5.2.4 Anticipated Weather Delays

Use where available, National Oceanic and Atmospheric Administration's (NOAA) historical monthly averages for the NOAA location closest to the contract site. The number of anticipated adverse weather delays allocated to an activity will be reflected in the activity's calendar.

1.5.2.5 Cost Loading

Equipment costs will be assigned to their respective procurement activities (i.e., the delivery milestone activity). Costs for installation of the material/equipment (labor, construction equipment, and temporary materials) will be assigned to their respective construction activities.

1.5.3 Schedule Software Settings and Restrictions

a. Activity Constraints: Date/time constraint(s), other than those required by the contract, will not be allowed unless accepted by the Contracting Officer. Identify any constraints proposed and provide an explanation for the purpose of the constraint in the Narrative Report.

b. Default Progress Data Disallowed: Actual Start and Actual Finish dates on the CPM schedule shall match the dates on the Contractor Quality Control and Production Reports.

c. Software Settings: Schedule calculations and Out-of-Sequence progress (if applicable) shall be handled through Retained Logic, not Progress Override. All activity durations and float values will be shown in days. Activity progress will be shown using Remaining Duration. Default activity type will be set to "Task".

1.5.4 Required Tabular Reports

The following reports shall be included with the schedule and update submittals:

a. Log Report: List all changes made between the previous schedule and current updated schedule.

Show changes for: Added & Deleted Activities, Durations, Remaining Durations, Activity Percent Complete, Total Float, Free Float, Calendars, Descriptions, Constraints, Added/Deleted Relations, Changed Relation Lags, Changed Driving Relations, and Changed Critical Status, [Added/Deleted Resources, Resource Quantities, Costs, Resource Percents, Earned Value Report: List all activities showing budget amount and cost.]

b. Late Start / Late Finish Report: Use Late start/Actual start --- Late finish/Actual finish sort (sorted by late start in chronological order).

c. Narrative Report: Include abstract of what activities are and are not on schedule, critical path events for the following month, milestones that must complete the following month.

1.6 SUBMISSION AND ACCEPTANCE

The Contractor shall submit a preliminary schedule prior to the Post-Award Kickoff (PAK). This preliminary schedule shall include detailed design and preliminary construction activities. It shall reflect the logic of the Contractor’s approach to the project. The Contractor shall present this schedule for discussion at the PAK. The discussion shall include the logic and reasonableness of the schedule, its ability to help the Government schedule work, and how the contractor intends to use the schedule.

The Contractor shall develop the schedule as design progresses, with detailed construction activities when each design package is final. Payment for completed work is dependent on an accepted, detailed schedule for that portion of work. Provide the following with each scheduled submittal:

a. Network diagrams.

b. Reports listed in paragraph entitled "Required Tabular Reports."

c. Data disks containing the project schedule. Include the back-up native .prx files.

1.6.1 Monthly Network Analysis Updates

At monthly intervals the Contractor and Government representatives will meet to jointly update and/or discuss and agree to be updated project schedule. The submission of an acceptable, updated schedule to the Government is a condition precedent to the processing of the Contractor's pay request. If a Schedule of Prices is the basis for progress payments, it shall be consistent with the logic and activity breakdowns on the progress schedule. If progress payments are based on a cost-loaded schedule, the Contractor and Government shall agree on percentage of payment for each activity progressed during the update period.

1.6.2 Final Schedule

As a condition precedent to the release of retention and making final payment, submit a "Final Schedule," as the last schedule update showing all activities at 100 percent completion. This schedule shall reflect the exact manner in which the project was actually constructed.

1.7 CONTRACT MODIFICATION

Submit a Time Impact Analysis with each cost and time proposal for a proposed change. Time Impact Analysis (TIA) shall illustrate the influence of each change or delay on the Contract Completion Date or milestones.

a. Each TIA shall include a Fragmentary Network (fragnet)demonstrating how the Contractor proposes to incorporate the impact into the contract schedule. A fragnet is defined as the sequence of new activities and/or activity revisions, logic relationships and resource changes that are proposed to be added to the existing schedule to demonstrate the influence of impacts to the schedule. The fragnet shall identify the predecessors to the new activities and demonstrate the impacts to successor activities. The Contractor shall run the schedule calculations and submit the impacted schedule with the proposal or claim.

b. Following the Contractor's receipt of a conformed contract modification, all changes in the fragnet used to determine impacts shall be incorporated into the schedule.

1.8 FLOAT

Contract float available in the schedule, at any time shall not be considered for the exclusive use of either the Government or the Contractor. Project Float will be a resource available to both the Government and the Contractor. Use of float suppression techniques is prohibited.

1.9 MONTHLY LOOK AHEAD SCHEDULE

Prepare a Monthly look ahead schedule from the Contract CPM Schedule showing planned work for the current week and subsequent three-week period. The monthly look ahead schedule shall be reviewed during each QC/ Production Meeting.

PART 2 PRODUCTS

Not used.

PART 3 EXECUTION

Not used.

-- End of Section --

SECTION 01 33 00.05 20

CONSTRUCTION SUBMITTAL PROCEDURES
11/07

PART 1 GENERAL

1.1 RELATED REQUIREMENTS

This section covers construction submittals that are not included in the design submittals. Submit design submittals in accordance with 01 33 10.05 20 DESIGN SUBMITTAL PROCEDURES. When using Unified Facility Guide Specifications (UFGS) sections that reference Section 01 33 00 SUBMITTAL PROCEDURES, change reference to this section, Section 01 33 00.05 20 CONSTRUCTION SUBMITTAL PROCEDURES.

1.2 SUBMITTAL DESCRIPTIONS (SD)

Submittal requirements are specified in Unified Facilities Guide Specifications (UFGS) in Part 2, GENERAL REQUIREMENTS; in references in Part 4 PERFORMANCE TECHNICAL SPECIFICATIONS; and in UFGSs in Part 5, PRESCRIPTIVE SPECIFICATIONS. Submittals that are identified by SD numbers use descriptions of items included in submittal packages and titles as follow:

SD-01 Preconstruction Submittals

Certificates of insurance.
Surety bonds.
List of proposed subcontractors.
List of proposed products.
Construction Progress Schedule.
Submittal register.
Schedule of values.
Health and safety plan.
Work plan.
Quality control and Commissioning plans.
Environmental protection plan.

SD-02 Shop Drawings

Drawings, diagrams and schedules specifically prepared to illustrate some portion of the work.

Diagrams and instructions from a manufacturer or fabricator for use in producing the product and as aids to the Contractor for integrating the product or system into the project.

Drawings prepared by or for the Contractor to show how multiple systems and interdisciplinary work will be coordinated.

SD-03 Product Data

Catalog cuts, illustrations, schedules, diagrams, performance charts, instructions and brochures illustrating size, physical appearance and other characteristics of materials or equipment for some portion of the work.

Samples of warranty language when the contract requires extended product warranties.

SD-04 Samples

Physical examples of materials, equipment or workmanship that illustrate functional and aesthetic characteristics of a material or product and establish standards by which the work can be judged.

Color samples from the manufacturer's standard line (or custom color samples if specified) to be used in selecting or approving colors for the project.

Field samples and mock-ups constructed on the project site establish standards by which the ensuring work can be judged. Includes assemblies or portions of assemblies which are to be incorporated into the project and those which will be removed at conclusion of the work.

SD-05 Design Data

Calculations, mix designs, analyses or other data pertaining to a part of work.

SD-06 Test Reports

Report signed by authorized official of testing laboratory that a material, product or system identical to the material, product or system to be provided has been tested in accord with specified requirements. (Testing must have been within three years of date of contract award for the project.)

Report which includes findings of a test required to be performed by the Contractor on an actual portion of the work or prototype prepared for the project before shipment to job site.

Report which includes finding of a test made at the job site or on sample taken from the job site, on portion of work during or after installation.

Investigation reports.

Daily checklists.

Final acceptance test and operational test procedure.

SD-07 Certificates

Statements signed by responsible officials of manufacturer of product, system or material attesting that product, system or material meets specification requirements. Must be dated after award of project contract and clearly name the project.

Document required of Contractor, or of a supplier, installer or subcontractor through Contractor, the purpose of which is to further quality of orderly progression of a portion of the work by documenting procedures, acceptability of methods or personnel qualifications.

Confined space entry permits.

SD-08 Manufacturer's Instructions

Preprinted material describing installation of a product, system or material, including special notices and Material Safety Data sheets concerning impedances, hazards and safety precautions.

SD-09 Manufacturer's Field Reports

Documentation of the testing and verification actions taken by manufacturer's representative to confirm compliance with manufacturer's standards or instructions.

Factory test reports.

SD-10 Operation and Maintenance Data

Data that is furnished by the manufacturer, or the system provider, to the equipment operating and maintenance personnel. This data is needed by operating and maintenance personnel for the safe and efficient operation, maintenance and repair of the item.

SD-11 Closeout Submittals

Documentation to record compliance with technical or administrative requirements or to establish an administrative mechanism.

OMSI manuals submitted at various stages and progression of construction.

1.3 SUBMITTALS

The use of a “G” following a submittal indicates that an approval action is required, either by the Government or by the Contractor's Designer of Record (DOR) or QC Specialist.

Submit the following in accordance with the requirements of this section.

SD-01 Preconstruction Submittals

Submittal Register Format;G

1.3.1 Submittal Register

The submittal register will be prepared during the initial design stages of the project and indicate each design and construction submittal. Maintain an electronic version of the submittal register as work progresses. The DOR must assist the DQC in preparing the submittal register by determining all project submittals that require DOR approval. The Contractor proposed submittal register format must include all types of information pertinent to the submittal process and be approved by the Contracting Officer prior to the first submission.

1.4 CONSTRUCTION QUALITY CONTROL

1.4.1 Contractor Reviewing, Certifying, Approving Authority

The QC organization is responsible for reviewing and certifying that submittals are in compliance with the contract requirements.

In RFP PART 4 PERFORMANCE TECHNICAL SPECIFICATIONS (PTS), there are UFGS specification sections required to be submitted as part of the design submittal. Unless specified otherwise in this section, the Contractor's DOR is the approving authority for submittals listed in these UFGS specifications with a "G" designation, unless the DOR delegates to Contractor Quality Control approval. RFP Part 4 PTS sections also include submittals identified for DOR approval that are not denoted with a “G” designation, these submittals cannot be delegated for Contractor Quality Control approval.
If RFP PART 5 PRESCRIPTIVE SPECIFICATIONS are utilized in this RFP, the Contractor's DOR is the approving authority for submittals listed with a "G" designation, unless the DOR delegates to Contractor Quality Control approval.

DOR shall approve construction submittals that are incorporated in the design submittal prior to being submitted to the Government for design submittal approval. Indicate approval of these construction submittals on the accompanying submittal register for that design package.

Submittal items identified in RFP PARTS 2, 4, and 5 that are not identified with a "G" designation or not designated for DOR approval (in RFP Part 4) are for Contractor Quality Control approval.

Construction submittals that are approved by the DOR or certified by the QC are not required to be submitted to the Government for surveillance, except where specified in paragraph SUBMITTALS RESERVED FOR GOVERNMENT SURVEILLANCE.

1.4.2 Submittals Reserved for Government Approval

The Government is the approving authority for submittals with a “G” designation in RFP Part 2 GENERAL REQUIREMENTS specification sections. Comply with additional Government approval requirements for Environmental submittals, as specified in RFP Part 2, Section 01 57 19.05 20 TEMPORARY ENVIRONMENTAL CONTROLS FOR DESIGN-BUILD and 01 57 19.01 20, SUPPLIMENTARY TEMPORARY ENVIRONMENTAL CONTROLS.

In addition to the Government approvals required by RFP Part 2, GENERAL REQUIREMENTS, the following submittals shall be certified by the QC Manager and the DOR, and approved by the Contracting Officer.

a. Transformer
b. Medium Voltage Switchgear
c. Medium Voltage Cables
d. Automatic Transfer Switches
e. Fire Protection
f. HVAC
g. Architectural finishes (Colors, flooring tiles, roofing tiles, doors, windows, etc finishes)

1.4.2.1 Scheduling for Government Approved Submittals

Except as specified otherwise, allow review period, beginning when Government receives submittal from the QC organization, of 20 working days for return of submittal to the Contractor. Period of review for submittals with Contracting Officer approval begins when Government receives submittal from QC organization. Period of review for each resubmittal is the same as for initial submittal.

1.4.3 Submittals Reserved for Government Surveillance

Surveillance submittals are approved by the Contractor in accordance with paragraph CONTRACTOR REVIEWING, CERTIFYING, AND APPROVING AUTHORITY, but provide the Government the opportunity to oversee critical project issues.

If during the Government surveillance of construction submittals, items are brought to the Contractor’s attention as non-compliant, the Contractor shall correct the submittal and construction to comply with the requirements of the RFP. Stamp surveillance submittals "APPROVED" by the DOR or QC Specialist and "FOR SURVEILLANCE ONLY." Submit the following Government surveillance submittals, prior to starting work for construction submittal items, and after the completion of the work for reports submittals items.

a. Submit fire protection related submittals pertaining to spray-applied fire proofing and fire stopping, exterior fire alarm reporting systems, interior fire alarm & detection systems, and fire suppression systems including fire pumps and standpipe systems.

b. Submit geotechnical related submittals pertaining to the soils investigations (reports and soils analysis), foundations (shallow and deep), pavements structure design, test pile and production pile testing and installation.

c. Submit conveying related submittals pertaining to elevators, escalators, weight handling equipment, lifts, and conveyors.

d. Submit roofing submittals pertaining to materials and systems used to make up the roof system.

e. Submit HVAC Testing, Adjusting, and Balancing required submittals.

f. Submit telecommunications shop drawings, as described in Part 4, D50 ELECTRICAL, for coordination with the NMCI Contractor.

g. Submit Performance Verification and Acceptance Testing submittals listed in the PTS and referenced UFGS.

h. Submit all Interim Special Inspection Reports on a bi-weekly basis until work requiring special inspections is complete. Submit all Structural Observation Reports and the Final Report of Special Inspections.

i. Submit Final LEED Certification Documentation for US Green Building Council Certification.

1.4.4 Constraints

a. Submittals shall be complete for each definable feature of work; submit components of definable feature interrelated as a system at the same time.

b. Approval of a separate material, product, or component does not imply approval of assembly in which item functions.

1.4.5 Variations

Variations from contract requirements require Government approval and will be considered where advantageous to the Government.

1.4.5.1 Considering Variations

Variations from contract requirements including the solicitation, the accepted proposal, and the final design, require Government approval and will be considered where advantageous to the Government. Variations to the contract requirements must be approved by the Designer of Record prior to submittal to the Government for approval of the Variation.

1.4.6 Contractor's Responsibilities

Ensure no work has begun until submittals for that work have been "approved" or "approved as noted."

1.4.7 QC Organization Responsibilities

Stamp each sheet of each submittal with QC certifying statement or approving statement, except that data submitted in bound volume or on one sheet printed on two sides may be stamped on the front of the first sheet only.

a. When approving authority is Contracting Officer, QC organization will certify submittals, assure proper signatures, and forward to Contracting Officer with the following certifying statement:

"I hereby certify that the (equipment) (material) (article) shown and marked in this submittal is that proposed to be incorporated with contract Number N40192-10-------, is in compliance with the contract documents, can be installed in the allocated spaces, and is submitted for Government approval.

RFP Part Two Submittals:

Certified by QC Manager _____, Date _____
(QC Manager)

RFP Part Four and Part Five Submittals:

Certified by DOR _____, Date _____

Certified by QC Manager _____, Date _____"

(1) Sign certifying statement or approval statement. The person signing certifying statements shall be QC organization member designated in the approved QC plan. The signatures shall be in original ink. Stamped signatures are not acceptable.

(2) Update submittal register database as submittal actions occur and maintain the submittal register at project site until final acceptance of all work by Contracting Officer.

(3) Retain a copy of approved submittals at project site, including Contractor's copy of approved samples.

b. When the Approving Authority is the Designer of Record, the DOR shall approve, professionally stamp, sign, and date submittals. DOR stamp on construction submittals or submission of design documents that include construction submittals indicates DOR approval for construction. QC organization will certify submittals, assure proper signatures, and forward to Contracting Officer with the following certifying statement:

"I hereby certify that the (equipment) (material) (article) shown and marked in this submittal is that proposed to be incorporated with contract Number N40192-10-------, is in compliance with the contract requirements, can be installed in the allocated spaces, and is submitted for DOR approval.

RFP Part Four and Part Five Submittals:

Approved by DOR _____, Date _____

Certified by QC Manager _____, Date _____"

(1) Sign certifying statement or approval statement. The person signing certifying statements shall be QC organization member designated in the approved QC plan. The signatures shall be in original ink. Stamped signatures are not acceptable.

(2) Update submittal register database as submittal actions occur and maintain the submittal register at project site until final acceptance of all work by Contracting Officer.

(3) Send copies of final DOR or QC Specialist approved and signed submittals that are identified in this section for Government surveillance to the Contracting Officer. Stamp copies “For Surveillance Only.”

1.4.8 Government's Responsibilities

When approving authority is the Contracting Officer, the Government will:

a. Note date on which submittal was received from QC Manager, on each submittal.

b. Review submittals for compliance with contract documents.

1.4.8.1 Government Actions

Submittals will be returned with one of the following notations:

a. Submittals marked "approved" or "approved as submitted" authorize Contractor to proceed with work covered.

b. A submittal marked "not reviewed" will be returned with an explanation of the reason it was not reviewed.

c. Submittals marked "approved as noted" or "approval except as noted; resubmission not required" authorize Contractor to proceed with work as noted provided Contractor takes no exception to the notations.

d. Submittals marked "revise and resubmit" or "disapproved" indicate submittal is incomplete or does not comply with design concept or requirements of the contract documents and shall be resubmitted with appropriate changes. No work shall proceed for this item until resubmittal is approved.

e. Submittals required for surveillance will be returned only if corrective actions are required.

1.5 FORMAT OF SUBMITTALS

1.5.1 Transmittal Form

All submittals shall be in electronic and printed format with transmittal form prescribed by Contracting Officer and standard for the project.

1.5.1.1 Combined Design and Construction Submittal Notification

Indicate on the design submissions transmittal form, which construction submittals have been combined with the design documents. Coordinate transmittal form list of combined design and construction submittals with submittal register to indicate DOR approval of all combined submittals.

1.6 QUANTITY OF SUBMITTALS

1.6.1 Quantity of Submittals Reserved for Government Approval

Submit four paper copies and one electronic copy of submittals of shop drawings requiring review and approval by Contracting Officer.

1.6.2 Quantity of Submittals Reserved for Government Surveillance

Submit three copies of submittals specified for surveillance to the Contracting Officer. Submit two additional copies of elevator submittals directly to the NAVFAC Elevator Specialist responsible for the NAVFAC elevator certification of the project.

1.7 FORWARDING SUBMITTALS

1.7.1 Overseas Shop Drawing Submittals

All submittals shall be sent via overnight express mail service. All costs associated with the overnight express mail service shall be borne by the Contractor. Costs associated with the overnight express mail of submittals related to proposed submittal variances of resubmittals necessary as a result of noncompliant or incomplete contractor submittals shall be the responsibility of the Contractor.

-- End of Section --

SECTION 01 33 10.05 20

DESIGN SUBMITTAL PROCEDURES
11/07

PART 1 GENERAL

1.1 SUMMARY

This section includes requirements for Contractor-originated design documents and design submittals.

1.2 REFERENCES

The publications listed below form a part of this specification to the extent referenced. The publications are referred to within the text by the basic designation only. The latest version of the publication at time of award shall be used.

U. S. GREEN BUILDING COUNCIL

USGBC LEED-NC	USGBC LEED for New Construction Green Building Rating System
USGBC LEED-NC	USGBC LEED for New Construction Reference Guide

U.S. DEPARTMENT OF DEFENSE (DOD) UNIFIED FACILITIES CRITERIA (UFC)

UFC 1-200-01	General Building Requirements
UFC 1-300-08	Criteria for Transfer and Acceptance of Military Real Property Handbook
UFC 1-300-09N	Design Procedures
UFC 3-100-10N	Architecture
UFC 3-120-10	Interior Design
UFC 3-200-10N	Civil
UFC 3-201-02	Landscape
UFC 3-220-01N	Geotechnical Engineering Procedures for Foundation Design of Buildings and Structures
UFC 3-300-10N	Structural
UFC 3-400-10N	Mechanical
UFC 3-500-10N	Electrical
UFC 3-600-01	Fire Protection Engineering for Facilities
UFC 3-600-10N	Fire Protection

UFC 3-800-10N Environmental

1.3 GENERAL DOCUMENTATION REQUIREMENTS

Contractor-originated design documents shall represent a project design that complies with the Request For Proposal (RFP), UFC 1-300-09N and the architectural and engineering discipline UFC's design guidance listed below.

a. UFC 1-200-01

b. UFC 3-100-10N

c. UFC 3-120-10

d. UFC 3-200-10N

e. UFC 3-201-02

f. UFC 3-220-01N

g. UFC 3-300-10N

h. UFC 3-400-10N

i. UFC 3-500-10N

j. UFC 3-600-01

k. UFC 3-600-10N

l. UFC 3-800-10N

1.4 SUBMITTALS

Submit design submittals, including shop drawings used as design drawings, to the Government for approval. The use of a "G" following a submittal indicates that a Government approval action is required. Submit the following in accordance with this section and Section 01 33 00.05 20 CONSTRUCTION SUBMITTAL PROCEDURES.

SD-01 Preconstruction Submittals

Submittal Register;G

SD-04 Samples

Final framed rendering and copies; G

SD-05 Design Data

Design Drawings;G

Specifications;G

Design Analysis; G

DD Form 1354; G

Design Submittals; G

Sustainable Design; G

Project Rendering; G

Historic Preservation and Planning Commission Submission; G

SD-07 Certificates

LEED Green Building Rating System (GBRS); G

LEED Certification Registration Application; G

LEED Certification; G

SD-11 Closeout Submittals

Record Documents; G

1.5 DESIGN QUALITY CONTROL

1.5.1 Contractor Reviewing and Certifying Authority

The QC organization is responsible for reviewing and certifying that design submittals are in compliance with the contract requirements.

1.5.2 Government Approving Authority

The Contracting Officer is the approving authority for design submittals.

1.5.3 Designer of Record Certifying Authority

The Designer of Record (DOR), as registered and defined in UFC 1-300-09N, is the design certifying authority. The DOR accepts responsibility for design of work in each respective design discipline, by stamping and approving final construction drawings submitted to the Government approval authority.

1.5.4 Contractor Construction Actions

Upon submission of sealed and signed design documents certified by the DOR, the Commissioning Authority (CA) and the Quality Control (QC) Managers, the Contractor may proceed with material and equipment purchases, fabrication and construction of any elements covered by that submittal[, except as specified in the following paragraph].

1.5.4.1 Exception to Contractor Construction Actions

The Government will approve the following final submittals before the Contractor shall be allowed to proceed with construction:

a. Final Design Drawings

b. Final Specifications

1.5.5 Contractor's Responsibilities

a. With the Designer or Record, verify site information provided in the RFP. In addition, provide additional field investigations and verification of existing site conditions as may be required to support the development of design and construction of the project.

b. Indicate on the transmittal form accompanying submittal which design submittals are being submitted as shop drawings.

c. Advise Contracting Officer of variations, as required by paragraph "Variations."

d. Provide an updated, cumulative submittal register with each design package that identifies the design and construction submittals required by that design package and previous submittals.

1.5.6 QC Organization Responsibilities

a. Both the CA and the QC Manager must certify design submittals for compliance with the contract documents. The DOR stamp on drawings indicates approval from the DOR.

b. QC organization shall certify submittals forwarded by the Designer of Record (DOR) to the Contracting Officer with the following certifying statement:

"I hereby certify that the (equipment) (material) (article) shown and marked in this submittal is that proposed to be incorporated with Contract Number N40192-10-------, is in compliance with the contract documents, and is submitted for Government approval.

Certified by Commissioning Authority _____,
Date _____

Certified by QC Manager_____,
Date _____"

c. Sign certifying statement. The persons signing certifying statements shall be the QC organization members designated in the approved QC plan. The signatures shall be in original ink. Stamped signatures are not acceptable.

d. Update submittal register as submittal actions occur and maintain the submittal register at project site until final approval of all work by Contracting Officer.

e. Retain a copy of approved submittals at project site.

1.5.7 Government Responsibilities

The Government will:

a. Note date on which submittal was received from QC manager, on each submittal.

b. Perform a quality assurance (QA) review of submittals. Government will notify Contractor when comments for that design package are posted and ready for Contractor evaluation and resolution.

c. Upon submittal of final design package and resolution of comments by the Contractor, the Government will sign final design package, when approved, and return electronic copy of signed design documents to the Contractor.

1.5.7.1 Actions Possible

Submittals will be returned with one of the following notations:

a. Submittals may be marked "approved."

b. Submittals marked "not reviewed" will indicate submittal has been previously reviewed and approved, is not required, does not have evidence of being reviewed and certified by Contractor, or is not complete. Submittal will be returned with an explanation of the reason it is not reviewed. Resubmit submittals returned for lack of review by Contractor or for being incomplete, with appropriate action, coordination, or change.

c. Submittals marked "revise and resubmit" or "disapproved" indicate submittal is incomplete or does not comply with design concept or requirements of the contract documents and shall be resubmitted with appropriate changes. If work has been started on the unacceptable portion of the design submittal, the Contractor shall propose corrective action. No further work shall proceed until the issue is resolved in a manner satisfactory to the Government.

1.6 DESIGN DRAWINGS

1.6.1 Shop Drawings Used as Design Drawings

Design drawings may be prepared more like shop drawings to minimize construction submittals after final designs are approved. Therefore, the Contractor is encouraged to prepare and submit with the design drawings, appropriate connection, fabrication, layout, and product specific drawings.

1.6.2 Drawing Format For Shop Drawings Used as Design Drawings

The Contractor-originated drawings will be used as the basis for the record drawings. Shop drawings included as design documents shall comply with the same drawing requirements such as drawing form, sheet size, layering, lettering, and title block used in design drawings.

1.6.3 Identification of Shop Drawings Used as Design Drawings

The Contractor's transmittal letter and submittal register shall indicate which shop drawings are being submitted as design drawings.

1.6.4 Drawing Standards

Prepare, organize, and present design drawings in accordance with the requirements of UFC 1-300-09N.

Submit all CADD files for the final drawings on CD-ROM disks in AutoCAD 2006 format. Drawing files shall be full files, uncompressed unzipped and editable.

1.6.5 Naval Facilities (NAVFAC) Engineering Command Drawing Numbers

Number the final Contractor-originated design drawings consecutively with NAVFAC drawing numbers. Determine the total number of sheets required for the complete set of drawings before requesting the NAVFAC drawing numbers from the Contracting Officer.

1.6.6 Seal on Documents

All final Contractor-originated design drawings shall be signed, dated, and bear the seal of the registered architect or the registered engineer of the respective discipline in accordance with UFC 1-300-09N. This seal shall be the seal of the Designer of Record for that drawing, and who is professionally registered for work in that discipline. A principal or authorized licensed or certified employee shall electronically sign and date final drawings and cover sheet, in accordance with UFC 1-300-09N. Application of the electronic seal and signature accepts responsibility for the work shown thereon.

1.6.7 Units of Measure

1.7 SPECIFICATIONS

Provide a Contractor-originated design specification that, in conjunction with the drawings, demonstrates compliance with materials, equipment, execution, and field quality control requirements of the RFP. The specified products, equipment, fixtures, devices, and systems submitted by the Contractor and approved by the Contracting Officer shall be used to construct the project. Prescriptive Technical Sections contained in Part 5 of this RFP shall become a part of the Contractor-originated specification without any changes and as provided in the RFP.

1.7.1 Specifications Format

Unless the use of a UFGS section is required, the Contractor may prepare design specifications that include manufacturer specific data and catalog cuts in lieu of prescriptive specifications. Organize the specifications using Construction Specification Institute (CSI) Masterformat™. A prescriptive specification is required for all items for which the Contractor has not made final materials and equipment choices. Provide specifications to include the following:

a. Cover sheet and table of contents.

b. Specification sections.

c. Manufacturer's Product Data.

1.7.2 Fire Protection Specifications

Specifications pertaining to spray-applied fire proofing and fire stopping, exterior fire alarm reporting systems, interior fire alarm and detection systems, and fire suppression systems, including fire pumps and standpipe systems shall be either prepared by, or reviewed and approved by the Fire Protection DOR.

1.7.3 Identification of Manufacturer's Product Data Used as Specifications

Provide complete and legible catalog cut sheets, product data, installation instructions, operation and maintenance instructions, warranty, and certifications for products and equipment for which final material and equipment choices have been made. Indicate, by prominent notation, each product that is being submitted including optional manufacturer's features, and indicate where the product data shows compliance with the RFP.

1.7.4 Submittal Register

Submit a current submittal register with each design submittal. Provide a cumulative register that identifies the design and construction submittals required by each design package along with previous submittals. The DOR shall assist in developing the submittal register by determining which submittal items are required to be approved by the DOR. To obtain Government approval of the final design package, complete all fields in the submittal register.

1.7.5 Specification Software

Submit the final specification source files in either MS Word or SpecsIntact.

1.8 DESIGN ANALYSIS

Prepare, organize, and present design analysis in accordance with the requirements of UFC 1-300-09N. The design analysis shall be a presentation of facts to demonstrate the concept of the project is fully understood and the design is based on sound engineering principles. Provide design analyses for each discipline and include the following:

a. Basis of design that includes:

(1) An introductory description of the project concepts that addresses the salient points of the design;

(2) An orderly and comprehensive documentation of criteria and rationale for system selection; and

(3) The identification of any necessary licenses and permits that are anticipated to be required as a part of the design and/or construction process.

b. Code and criteria search shall identify all applicable codes and criteria and highlight specific requirements within these codes and criteria for critical issues in the facility design.

c. Calculations as specified and as needed to support this design.

d. Section titled "Sustainable Design" that addresses sustainable concepts and LEED Rating Analysis Report prepared by a LEED Accredited Professional recognized by the U.S. Green Building Council.

e. Section titled "Antiterrorism" that documents the antiterrorism features.

1.8.1 Basis of Design Format

The basis of design for each design discipline shall include a cover page indicating the project title and locations, contract number, table of contents, tabbed separations for quick reference, and bound in separate volumes for each design discipline.

1.8.2 Design Calculations

Place the signature and seal of the designer responsible for the work on the cover page of the calculations for the respective design discipline.

1.8.3 Sustainable Design

Integrate sustainable strategies and features into the design to minimize the energy consumption of the facilities; conserve resources; minimize adverse effects to the environment; and improve occupant productivity, health, and comfort to reduce the total cost ownership of the project using a whole building, life cycle approach. In accordance with the Engineering & Construction Bulletin 2008-1 and other directives, the facility and all site features shall be designed and constructed using USGBC-NC.

The minimum sustainable design rating level for the project is to achieve LEED-NC Silver. The USGBC LEED-NC credits and additional sustainable requirements in Part Three, 2.3.1 Sustainable Design are mandatory unless not applicable due to project scope as determined by the Government and as stated in the task order. The design and construction shall incorporate sustainable design strategies and features to the fullest extent possible, consistent with mission, budget and client requirements. Ensure sustainable strategies and features in the design phase are incorporated in the construction phase.

Information and resources on sustainable design principles and guidelines are explained in the "Whole Building Design Guide" that can be found at www.wbdg.org and in the Air Force Environmentally Responsible Facilities Guide, at www.afcee.brooks.af.mil/green.

1.8.3.1 LEED Green Building Rating System (GBRS) Submittals - USGBC Certification

Provide copies of the LEED Certification Registration Application and the complete LEED support documentation to the U.S. Green Building Council (USGBC) to obtain the minimum certificate level specified herein.

a. Provide the following information for the Basis of Design:

(1) A completed USGBC LEED-NC Project Checklist indicating all LEED Prerequisites and Credits to be implemented into the facility design and total LEED score for the project.

(2) Description of how each LEED Prerequisite and Credit will be achieved.

(3) List of Architects or Engineers from Contractor's Design Team and who on the team is responsible for implementing each LEED Prerequisite and Credit into the facility design.

(4) Identify the Design Team's USGBC LEED Accredited Professionals.

b. For the submission specified, provide the following:

(1) At 35% Design submittal, provide documentation of the USGBC LEED Certification Registration Application.

(2) At 100% Design submittal, provide a USGBC LEED –NC Project Checklist preliminary LEED documentation, in the form of a three-ring binder, of all LEED Prerequisites and Credits to be obtained as required by the USGBC LEED-NC Rating System.

(3) At final design submittal, update the USGBC LEED-NC Project Checklist and LEED documentation binder with any changes and include an electronic copy of the LEED documentation.

(4) Within thirty (30) days of Beneficial Occupancy Date, developed and submit the project case study for the U.S Department of Energy’s Federal Energy Management Program "High Performance Federal Buildings Database" (http://www.eere.energy.gov/femp/highperformance).

(5) Within 60 days after the beneficial Occupancy Date (BOD), submit LEED Certification Registration Application and complete LEED Certification Documentation to USGBC for certification. After LEED certification is obtained, provide the plaque and 5 color copies of the LEED Certification to the Contracting Officer. Mat and frame the original LEED Certification document.

1.8.3.2 Sustainable Validation

Provide a design that incorporates sustainable techniques and materials to the greatest extent possible and to meet as many points applicable to the project and monetarily feasible. Provide an analysis of the USGBC LEED-NC criteria as it applies to the design of this project and include updated information with each design submittal.

a. Provide the following information for the Basis of Design:

(1) A completed USGBC LEED-NC Project Checklist indicating all LEED Prerequisites and Credits that are applicable to the project and the total anticipated score.

(2) Description of how each applicable LEED Prerequisite and Credit and other sustainable features and strategies will be achieved.

(3) Identify the Design Team's LEED Accredited Professional and sustainable team member responsible for coordinating the sustainable requirements of the project.

b. For the submission specified, provide the following:

(1) At 100% Design submittal, provide a USGBC LEED-NC Project Checklist and preliminary LEED documentation, in the form of a three-ring binder, of all LEED Prerequisites and Credits to be obtained as required by the USGBC LEED-NC Rating System. Substitute forms other than those required by the USGBC are acceptable.

(2) At final design submittal, update the USGBC LEED-NC Project Checklist and the LEED documentation binder with any changes and include an electronic copy of the LEED documentation. The project LEED Accredited Professional and Designer of Record shall sign a statement validating that the LEED prerequisites and credits achieved by the project provide an accurate estimate of the rating the USGBC would assign to the project.

1.8.3.3 EPA Designated Products

Use products that meet or exceed the minimum requirements of this RFP and the EPA guideline standards for recovered content to the maximum practicable extent in the performance of the contract. See www.epa.gov/cpg/products.htm for a list of EPA designated products and a list of manufacturers and suppliers of EPA designated products.

1.8.4 Historic Preservation and Planning Commission Submission

Prepare the presentation materials required to obtain approval from the Historic Preservation and Planning Commissions having jurisdiction over the site location. The submission of the materials to the agencies will be accomplished by the Government. Consult with the NAVFAC Region Historic Preservation Officer and prepare a submittal in accordance with the 36 CFR 800.11, DOCUMENT STANDARDS. The Contractor is responsible for preparing the submittal package, presenting the project in public meeting, if called upon by the Government; and to modify the submittal and contract documents to incorporate the comments of the agencies having jurisdiction to obtain project approval.

1.9 PROJECT RENDERING

When required in the task order, provide a full color rendering of the proposed facility by a company that regularly does this work as a major component of their normal business. Use the final rendering to produce the image for the signboard and the framed photographic copies provided to the Contracting Officer.

1.9.1 Final Framed Rendering and Copies

Provide the final rendering within 30 days of concept design approval. Provide the final original color rendering, two full size photographic reproduction(s) of the original rendering, and the photographic negative. Mount original and reproductions on acid free board, matted with metal frames, and utilizing non-glare glass. Print the project name, location, and Architect/Engineer/Contractor firm's name on the matting.

Ship the rendering, the photographic copies, and the negative in resilient packaging to ensure damage-free delivery.

1.10 Facility Recognition Plaque

When required in the task order, provide a facility recognition plaque for this facility in accordance with UFC 1-300-09N, *Design Procedures.*

1.11 RECORD DOCUMENTS

1.11.1 Record Drawings

The as-built modifications shall be accomplished by electronic drafting methods on the Contractor-originated .DWG design drawings to create a complete set of record drawings. In addition to the requirements of FAC 5252.236-9310, RECORD DRAWINGS, survey the horizontal and vertical location of all provided underground utilities to within 30 mm (0.1 feet) relative to the station datum. All pipe utilities shall be surveyed at each fitting and every 10 m (100 LF) of run length. Electrical and communication ductbank, direct buried conduit, and direct buried conductor shall be surveyed every 10 m (100 LF) and at each change of direction. Record locations and elevations on the Record Drawings.

a. For each record drawing, provide CADD drawing identical to signed Contractor-originated .PDF drawings, that incorporates modifications to the as-built conditions. In addition, copy initials and dates from the Contracting Officer approved .PDF documents to the title block of the record CADD.DWG drawings. The RFP reference or definitive drawings are not required for inclusion in the record set of drawings.

b. After all as-built conditions are recorded on the CADD.DWG files, produce a PDF [and .TIF] file of each individual record drawing in conformance with UFC 1-300-09N. Electronic signatures are not required on record drawings.

1.11.2 Source Documents

Provide the specifications, design analysis, reports, surveys, calculations, and any other contracted documents on the CD-ROM disk with the record drawings.

1.11.3 DD Form 1354

DOR shall prepare a DD Form 1354, TRANSFER AND ACCEPTANCE OF MILITARY REAL PROPERTY, in accordance with UFC 1-300-08, available at http://65.204.17.188/report/doc_ufc.html. Submit interim form for Government approval a minimum of 30 days prior to final acceptance of work. Submit Final DD Form 1354 at Beneficial Occupancy of facility.

Coordinate with Section 01 20 00.05 20, Price and Payment Procedures for construction categories and associated category codes. The Contractor's Schedule of Prices shall allocate the total cost of construction to the appropriate category codes.

When documenting demolition work, the DD Form 1354 shall list the quantitative data associated with this work as a negative value to show the cost should be deleted from the Navy asset data store. Coordinate with the Installation Real Property POC to assist in determining the negative value for demolition work.

PART 2 PRODUCTS

2.1 CONSOLIDATED RFP DOCUMENTS

Within four weeks after contract award, provide three electronic and hard copies of consolidated RFP documents incorporating the Contractor's Proposal and all RFP amendments and revisions that are contained in the contract award. Identify the changes to the RFP with the "Red-lining" or "Track Changes" feature of SpecsIntact or MS Word to highlight the pre-award modifications to the contract. Identify the amendment source at each addition and deletion by annotation, such as footnote or reference in parenthesis.

2.2 DESIGN SUBMITTALS

Complete the Contractor-originated design submittals as defined by this contract, and coordinate with the approved design network analysis schedule.

2.2.1 Design Submittal Packages

The Government prefers to review for Quality Assurance (QA) as few submittal packages as possible. Site and Building Design Submittal Packages are required, however Critical Path Design Submittals are acceptable if they are substantiated as having an impact to the critical path in the Government approved Network Analysis Schedule. A Critical Path submittal shall include all design analyses, drawings, specifications and product data required to fully describe the project element for Government review.

Examples of project elements that may be submitted as Critical Path Design Submittal Packages are: Master Plan Design, Demolition Design, Foundation Design, Structural Design, Building Enclosure Design, Remaining Work Design, Furniture/Equipment Design, long lead items, or any other construction activity or project element that can be organized into a submittal package that can be reviewed and approved by the Government without being contingent upon subsequent design submittals.

2.2.1.1 Site Design

The Site Design typically includes the following components:

a. Master Site Plan

b. Demolition

c. Site work [including Environmental]

d. Geotechnical

2.2.1.2 Building Design

The Building Design typically includes the following components:

a. Foundation

b. Structural

c. Building Enclosures

d. Remaining Work

e. Furniture/Equipment

2.2.2 Required Design Submittals

Provide the following Design Submittal packages. Provide comprehensive, multi-discipline design packages that include design documentation for project elements, fully developed to the design stage indicated, and in accordance with UFC 1-300-09N, except where specified otherwise.

a. Concept Design presented at Concept Design Workshop

b. Design Development in-progress, over the shoulder review, - Government Progress QA. 14 calendar day Government review time.

c. Prefinal (100%) Design - Government Progress QA. 14 calendar day Government review time.

d. Final Design - Government QA.

2.2.3 Critical Path Design Submittals

Provide Critical Path Design Submittals that include design documents for the project elements involved. Include and provide full documentation that would normally have been provided in earlier submittal stages, such as Design Development Phase.

a. 100 percent (Prefinal) Design - Government Progress QA. 14 calendar day Government review time.

b. Final Design - Government QA

2.2.4 Review Copies of Design Submittal Packages

a. Provide copies of each design submittal package for review to the following reviewers. Addresses for mailing will be furnished at the PAK meeting.

(1) 4 paper copies to the NAVFAC component and 2 electronic copies of the Final submittals.

(2) 2 paper copies to the Activity claimant.

(3) 1 paper copy to the Activity Public Works Officer (PWO) and 1 electronic copy of the Final submittals.

b. Provide the same quantities of copies for resubmittals, as required for each design submittal.

2.3 IDENTIFICATION OF DESIGN SUBMITTALS

Provide a title sheet to clearly identify each submittal, the completion status, and the date. The title sheet shall use the standard format indicated in the UFC 1-300-09N for title sheets. The title sheet shall be unique to a particular design submittal. Submit the project title sheet with design status and date for the design submittals.

2.3.1 Critical Path Submittal Title Sheet

Identify Critical Path submittals as such, and include a title sheet indicating the type of critical path submittal, the status, and the date.

PART 3 EXECUTION

3.1 CONTRACTOR'S RESOLUTION OF COMMENTS

Provide written responses to all written comments by the Government. Resubmittal of an unacceptable design submittal shall be a complete package that includes all the required, specified components of that design submittal. When required by the Government, Contractor resubmittal of design package, due to nonconformance to the contract, is not a delay in the contract.

3.2 VARIATIONS

Variations from contract requirements require Government approval and will be considered where advantageous to the Government. The Designer of Record must approve any proposed variation prior to submittal to the Government.

3.3 THE CONTRACT AND ORDER OF PRECEDENCE

3.3.1 Contract Components

The contract consists of the solicitation, the approved proposal, and the final design.

3.3.2 Order of Precedence

NFAS Clause 5252.236-9312. In the event of conflict or inconsistency between any of the below described portions of the conformed contract, precedence shall be given in the following order:

a. Any portions of the proposal or final design that exceed the requirements of the solicitation.

(1) Any portion of the proposal that exceeds the final design.

(2) Any portion of the final design that exceeds the proposal.

(3) Where portions within either the proposal or the final design conflict, the portion that most exceeds the requirements of the solicitation has precedence.

b. The requirements of the solicitation, in descending order of precedence:

(1) Standard Form 1442 and Price Schedule.

(2) Part 1 - Contract Clauses.

(3) Part 2 - General Requirements.

(4) Part 3 - Project Program Requirements.

(5) Part 6 - Attachments (excluding Concept Drawings).

(6) Part 5 - Prescriptive Specifications exclusive of performance specifications.

(7) Part 4 - Performance Specifications exclusive of prescriptive specifications.

(8) Part 6 - Attachments (Concept Drawings).

3.3.2.1 Government Review or Approval

Government review or approval of any portion of the proposal or final design shall not relieve the Contractor from responsibility for errors or omissions with respect thereto.

-- End of Section --

SECTION 01 35 13.05 20

SPECIAL PROJECT PROCEDURES FOR DESIGN-BUILD
11/07

PART 1 GENERAL

1.1 SUBMITTALS

The use of a "G" following a submittal indicates that a Government approval action is required. Submit the following in accordance with Section 01 33 10.05 20 DESIGN SUBMITTAL PROCEDURES and Section 01 33 00.05 20 CONSTRUCTION SUBMITTAL PROCEDURES.

SD-01 Preconstruction Submittals

Watercraft list; G

SD-04 Samples

Model Unit; G

PART 2 PRODUCTS

Not used.

PART 3 EXECUTION

3.1 HAZARDS TO AIRFIELD, HELIPORT OPERATION

In addition to "DFARS 252.236-7005, Airfield Safety Precautions," the following paragraphs apply.

3.1.1 Work in Proximity to Runways and Landing Strips

Accomplish all construction work on the runways, taxiways, and parking aprons and in the end zones of the runways and 75 feet to each side of the runways and taxiways, the landing strip, 75 feet to each side thereof, and on the taxiways and parking aprons with extreme care regarding the operation of aircraft. Cooperate closely, and coordinate with the Operations Officer and the Contracting Officer. Obtain necessary approvals prior to mobilization and start of on-site work, such as Temporary Airfield Construction Waiver (TACW) and Free Zone request. Park equipment in an area designated by the Contracting Officer. Under no circumstances shall equipment be parked overnight or for any extended period of time in the proximity of the runways or taxiways and landing strip. Leave no material in areas where extreme care is to be taken regarding the operation of aircraft.

3.1.2 Schedule of Work/Aircraft Operating Schedules

Schedule work to conform to aircraft operating schedules. The Government will exert every effort to schedule aircraft operations so as to permit the maximum amount of time for the Contractor's activities; however, in the event of emergency, intense operational demands, adverse wind conditions,

and other such unforeseen difficulties, the Contractor shall discontinue operations at the specified locations in the aircraft operational area for the safety of the Contractor and military personnel and Government property. Submit a schedule of the work to the Contracting Officer for transmittal to the Operations Officer describing the work to be accomplished; the location of the work, noting distances from the ends of runways, taxiways and landing strips and buildings and other structures as necessary; and dates and hours during which the work is to be accomplished. Keep the approved schedule of work current, and notify the Contracting Officer of any changes prior to beginning each day's work.

3.1.3 Daytime Markings

During daylight, mark stationary and mobile equipment with international orange and white checkered flags, mark the material, and work with yellow flags.

3.1.4 Nighttime Markings

During nighttime, which begins 2 hours before sundown and ends 2 hours after sunrise, mark stationary and mobile equipment and material, and work with red lanterns. Where the Operations Officer and the Contracting Officer determines that the red lanterns may confuse pilots approaching for landings, the Operations Officer and Contracting Officer may direct that the red lanterns be left off or that the color of the globes be changed.

3.1.5 Excavation

Open only those trenches for which material is on hand and ready for placing therein. As soon as possible after the material has been placed and work approved, backfill and compact the trenches as specified.

3.1.6 Contractor Safety Precautions

The contractor is advised that aircraft operations will produce extremely high noise levels and will induce vibrations in pavements, structures, and equipment in the vicinity, and may result in high velocity flying debris in the area. The contractor shall be responsible for providing all necessary ear protective and other safety devices for his personnel, for insuring protection of his equipment, and for scheduling the work to eliminate hazards to his personnel and equipment and to prevent damage to work performed by him.

3.1.7 Base Civil Engineering (BCE) Work Clearance Request

Obtain an approved BCE Work Clearance Request, AF Form 103, prior to the start of excavation, digging work, or work that disrupts aircraft or vehicular traffic flow, base utility services, fire and intrusion alarm system, or routine activities of the Activity.

3.1.8 Radio Contact

Provide necessary battery powered portable radios, including one radio for the tower. During work within the landing area, have an operator (who speaks fluent English) available for radio contact with the tower at all times. Radio frequency shall be approved by the tower.

3.2 HARBOR WATERWAYS

In addition to "DFARS 252.236-7002, Obstruction of Navigable Waterways," obtain from the Operations Officer at the Naval Base Guam via the Contracting Officer, permission to use Inner Apra Harbor waterways and the regulations and directives governing such usage. Submit a watercraft list with a description of crafts, including sizes, types, numbers and boat crew for approval.

3.2.1 Hazards to Navigation

Maintain complete control of the movement of floating equipment and material. Loose floating equipment and material are not permitted. Keep in readiness at all times a powered craft capable of moving, securing and disposing of floating equipment which may get loose and become a hazard to navigation.

3.2.2 Submarine Cables or Underwater Utilities

Physically locate submarine cables or underwater utilities as indicated prior to performance of work.

3.2.3 Naval Base Guam Ammunition Wharf (Kilo) Operation Safety and Security

The Contractor shall anticipate delays and disruption in construction activities for a period of 14 consecutive calendar days during the loading and unloading of ammunition at the ammunition wharf. Disruption may range from complete shutdown of construction activity for a prolonged period of time or periodic short term shutdown of less than a full day, but in no event will all such shutdowns in the aggregate exceed 30 calendar days per calendar year. Bidders shall take into consideration such delays when preparing their bids.

3.3 MODEL UNIT

Prior to placement of material orders for components of the BEQ living suites, BOQ living suites and family housing units and the installation of those components throughout the project, the Contractor shall complete the construction of the components of the model unit, and gain the approval of the Contracting Officer for the materials and workmanship therein.

3.3.1 Model Unit Description

The model unit shall be made up of enough living suites consisting of two bedrooms and an interconnecting bathroom, single family housing units to show all of the different levels of completion required below. The model unit shall have enough suites, housing units to show all level of completion simultaneously, except for foundation and floor slab levels which are approved by the Contracting Officer and covered by following levels. The model unit shall be living suites and family housing units constructed at the location agreed upon with the Contracting Officer and a part of the permanent structure.

3.3.2 Model Unit Requirements

The construction of the model unit shall adhere to the following requirements:

a. Materials provided in model unit shall be those actually approved in submittals. The QC Manager and Organization must be in place to approve and process submittals in accordance with Sections 01 33 10.05 20 DESIGN SUBMITTAL PROCEDURES and 01 33 00.05 20 CONSTRUCTION SUBMITTAL PROCEDURES.

b. The Contractor shall provide all temporary utilities and climate control necessary to construct, inspect, approve, and maintain the model unit.

c. Prior to completion and approval of the model unit, and with written permission to start from the Contracting Officer, the Contractor may perform general sitework and run major utility lines for the rest of the project.

d. As each model unit's level of completion is approved by the Contracting Officer, construction of that level's components throughout the remainder of the project may proceed.

3.3.3 Model Unit Levels of Completion

The completed model unit shall be exhibited for approval. Upon completion, the model unit shall be available to the Government for a period of fifteen (15) working days for inspection after notification is received by Contracting Officer.

Model unit shall be exhibited and approved at the following levels of completion:

a. Level 1 (Pre-Finished Level) - Model unit construction within a completed building exterior shall exhibit plumbing, ductwork, electrical locations, exposed framing, and windows. Walls and floors shall be unfinished but ready for application of final finish. Upon completion of this milestone, model unit shall be available to the Government for a period of five (5) working days for inspection.

b. Level 2 (Finished Level) - Model unit construction shall exhibit all materials, completely finished as specified, including fixtures, wall and floor finishes, cabinets, and shelving. Upon completion of this milestone, the model unit shall be available to the government for a period of fifteen (15) working days for inspection.

Model unit shall be exhibited and approved at the following 7 levels of completion. For inspections of model unit, level 1 shall each be available to the government for a period of twenty-eight (28) calendar days, and level 2 through 7 shall each be available to the government for a period of ten (10) calendar days.

a. Level 1 (Foundation & Floor Slab Level) - Model unit construction shall exhibit treatment of earth excavation, testing of underslab mechanical piping, earth compaction, assembly and support of concrete reinforcing, technique of concrete movement and placement, framing of foundation steps, placement of insulation, final exposed concrete finished surface treatment, location outlines of all walls, all slab penetrations, and structural support points.

b. Level 2 (Framing Level) - Model unit construction shall exhibit all load bearing and non-load bearing framing, sheathing, anchorage for exterior shell materials, and shall be framed out ready for trim.

c. Level 3 (Exterior Shell Level) - Model unit exterior construction shall exhibit all exterior finishes, windows and doors with temporary hardware, caulking, sealant, sheathing paper, wall ties, locations of mechanical equipment, roofing, louvers, vents and trim.

d. Level 4 (Plumbing, Mechanical and Electrical rough-in Level) - Model unit construction shall exhibit electrical conduit and box location for switches, outlets fixtures, cable and data collection. This level's model unit construction shall also exhibit ductwork, built-in plumbing fixtures, plumbing piping, and water pressure test of all plumbing pipe.

e. Level 5 (Interior Finishes-rough Level) - Model unit construction shall exhibit non-veneer plaster, unspackled and uncaulked wall and ceiling finishes, insulation, interior doors, final locations of all outlets and fixtures.

f. Level 6 (Interior Finishes & Fixtures-final Level) - Model unit construction shall exhibit final interior finishes, veneer plaster, painting, caulking, built-in shelving, cabinetwork, cabinet supported sinks, final door hardware, mechanical louvers, final electrical equipment connections, electrical fixtures, freestanding bathroom fixtures, properly functioning appliances, and operation of mechanical and electrical systems.

g. Level 7 (Site Finishes Level) - Model unit construction shall exhibit final driveway, walks, exterior stairs, final concrete and asphalt finished surface treatment, topsoil quality and application, sodding/seeding of lawn, tree and shrub planting, landscaping beds, playground fall areas and playground equipment. Contracting Officer shall be notified and retain the right to inspect all preparation and installation of pavings.

-- End of Section --

SECTION 01 35 26

GOVERNMENTAL SAFETY REQUIREMENTS
02/09

PART 1 GENERAL

1.1 REFERENCES

The publications listed below form a part of this specification to the extent referenced. The publications are referred to within the text by the basic designation only.

AMERICAN SOCIETY OF SAFETY ENGINEERS (ASSE/SAFE)

ASSE/SAFE A10.32	(2004) Fall Protection
ASSE/SAFE A10.34	(2001; R 2005) Protection of the Public on or Adjacent to Construction Sites
ASSE/SAFE Z359.1	(2007) Safety Requirements for Personal Fall Arrest Systems, Subsystems and Components

ASME INTERNATIONAL (ASME)

ASME B30.22	(2005) Articulating Boom Cranes
ASME B30.3	(2004) Construction Tower Cranes
ASME B30.5	(2007) Mobile and Locomotive Cranes
ASME B30.8	(2004) Floating Cranes and Floating Derricks

NATIONAL AERONAUTICS AND SPACE ADMINISTRATION (NASA)

NASA NPG 8621.1	(2004a) NASA Mishap Reporting, Investigating and Record Keeping Policy
NASA NPG 8715.3	(2004) NASA Safety Manual
NASA NSS 1740.12	(1993) NASA Safety Standard For Explosives, Propellants and Pyrotechnics

NATIONAL FIRE PROTECTION ASSOCIATION (NFPA)

NFPA 10	(2007; Errata 2007; AMD 1 2007) Standard for Portable Fire Extinguishers
NFPA 241	(2004) Safeguarding Construction, Alteration, and Demolition Operations
NFPA 51B	(2008) Fire Prevention During Welding, Cutting, and Other Hot Work
NFPA 70	(2007; AMD 1 2008) National Electrical Code - 2008 Edition
NFPA 70E	(2008) Electrical Safety in the Workplace

U.S. ARMY CORPS OF ENGINEERS (USACE)

EM 385-1-1	(2008) Safety and Health Requirements Manual

U.S. NATIONAL ARCHIVES AND RECORDS ADMINISTRATION (NARA)

10 CFR 20	Standards for Protection Against Radiation
29 CFR 1910	Occupational Safety and Health Standards
29 CFR 1910.146	Permit-required Confined Spaces
29 CFR 1915	Confined and Enclosed Spaces and Other Dangerous Atmospheres in Shipyard Employment
29 CFR 1919	Gear Certification
29 CFR 1926	Safety and Health Regulations for Construction
29 CFR 1926.500	Fall Protection

1.2 SUBMITTALS

Government approval is required for submittals with a "G" designation; submittals not having a "G" designation are for Contractor Quality Control approval. Submit the following in accordance with Section 01 33 00 SUBMITTAL PROCEDURES:

Government acceptance is required for submittals with a "G, A" designation.

SD-01 Preconstruction Submittals

Accident Prevention Plan (APP); G, A

Activity Hazard Analysis (AHA); G, A

Crane Critical Lift Plan; G, A

Proof of qualification for Crane Operators; G, A

SD-06 Test Reports

Reports

Submit reports as their incidence occurs, in accordance with the requirements of the paragraph entitled, "Reports."

Accident Reports

Monthly Exposure Reports

Crane Reports

Gas Protection

SD-07 Certificates

Confined Space Entry Permit

Hot work permit

License Certificates

Contractor Safety Self-Evaluation Checklist; G, A

Third Party Certification of Barge-Mounted Mobile Cranes

Certificate of Compliance (Crane)

Submit one copy of each permit/certificate attached to each Daily Quality Control Report.

Machinery & Mechanized Equipment Certification Form

1.3 DEFINITIONS

a. Competent Person for Fall Protection. A person who is capable of identifying hazardous or dangerous conditions in the personal fall arrest system or any component thereof, as well as their application and use with related equipment, and has the authority to take prompt corrective measures to eliminate the hazards of falling.

b. High Visibility Accident. Any mishap which may generate publicity and/or high visibility.

c. Medical Treatment. Treatment administered by a physician or by registered professional personnel under the standing orders of a physician. Medical treatment does not include first aid treatment even through provided by a physician or registered personnel.

d. Operating Envelope. The area surrounding any crane. Inside this "envelope" is the crane, the operator, riggers and crane walkers, rigging gear between the hook and the load, the load and the crane's supporting structure (ground, rail, etc.).

e. Qualified Person for Fall Protection. A person with a recognized degree or professional certificate, and with extensive knowledge, training and experience in the field of fall protection; who is capable of performing design, analysis, and evaluation of fall protection systems and equipment.

f. Recordable Injuries or Illnesses. Any work-related injury or illness that results in:

(1) Death, regardless of the time between the injury and death, or the length of the illness;

(2) Days away from work (any time lost after day of injury/illness onset);

(3) Restricted work;

(4) Transfer to another job;

(5) Medical treatment beyond first aid;

(6) Loss of consciousness; or

(7) A significant injury or illness diagnosed by a physician or other licensed health care professional, even if it did not result in (1) through (6) above.

g. "USACE" property and equipment specified in USACE EM 385-1-1 should be interpreted as Government property and equipment.

h. Weight Handling Equipment (WHE) Accident. A WHE accident occurs when any one or more of the six elements in the operating envelope fails to perform correctly during operation, including operation during maintenance or testing resulting in personnel injury or death; material or equipment damage; dropped load; derailment; two-blocking; overload;

and/or collision, including unplanned contact between the load, crane, and/or other objects. A dropped load, derailment, two-blocking, overload and collision are considered accidents even though no material damage or injury occurs. A component failure (e.g., motor burnout, gear tooth failure, bearing failure) is not considered an accident solely due to material or equipment damage unless the component failure results in damage to other components (e.g., dropped boom, dropped load, roll over, etc.).

i. Safety Officer. A qualified or competent officer of the firm who shall be responsible for enforcing and implementing the overall Contractor Safety and Health Program.

j. Site Safety and Health Officer (SSHO). A qualified or competent person who shall be responsible for enforcing and implementing the Contractor's Safety and Health Program at a project site in accordance with the accepted Accident Prevention Plan (APP).

1.4 CONTRACTOR SAFETY SELF-EVALUATION CHECKLIST

Contracting Officer will provide a "Contractor Safety Self-Evaluation checklist" to the Contractor at the pre-construction conference. The checklist will be completed monthly by the Contractor and submitted with each request for payment voucher. An acceptable score of 90 or greater is required. Failure to submit the completed safety self-evaluation checklist or achieve a score of at least 90, will result in a retention of up to 10 percent of the voucher.

1.5 REGULATORY REQUIREMENTS

In addition to the detailed requirements included in the provisions of this contract, comply with USACE EM 385-1-1, and the following federal, Government of Guam laws, ordinances, criteria, rules and regulations. Submit matters of interpretation of standards to the appropriate administrative agency for resolution before starting work. Where the requirements of this specification, applicable laws, criteria, ordinances, regulations, and referenced documents vary, the most stringent requirements govern.

1.6 SITE QUALIFICATIONS, DUTIES AND MEETINGS

1.6.1 Personnel Qualifications (Level to be specified in each Task Order)

1.6.1.1 Site Safety and Health Officer (SSHO)

Provide a site Safety and Health Officer (SSHO) at the work site at all times to perform safety and occupational health management, surveillance, inspections, and safety enforcement for the Contractor. Unless otherwise specified in the task order, the SSHO shall have no other duties other than safety and occupational health management, inspections, and enforcement on that project. In no case, however, will all three functions (Superintendent, QC and SSHO) be assigned to the same individual. Meet the following requirements within the SSHO:

Level 1:
Worked on similar projects.
10-hour OSHA construction safety class or equivalent within last 3 years.
Competent person training as needed. 40 hour Construction Hazard Awareness Course provided by the Guam Contractors Association.

Level 2:
A minimum of 3 years safety work on similar project.

30-hour OSHA construction safety class or equivalent within last 3 years.
Competent person training as needed. 40 hour Construction Hazard Awareness Course provided by the Guam Contractors Association.

Level 3:
A minimum of 5 years safety work on similar projects.
30-hour OSHA construction safety class or equivalent within the last 5 years.
An average of at least 24 hours of formal safety training each year for the past 5 years.
Competent person training as needed. 40 hour Construction Hazard Awareness Course provided by the Guam Contractors Association.

Level 4:
A minimum of 10 years safety work of a progressive nature with at least 5 years of experience on similar projects.
30-hour OSHA construction safety class or equivalent within the last 5 years.
An average of at least 24 hours of formal safety training each year for the past 5 years with training for competent person status for at least the following 4 areas of competency: Excavation; Scaffolding; Fall protection; Hazardous energy; Confined space; Health hazard recognition, evaluation and control of chemical, physical and biological agents; Personal protective equipment and clothing to include selection, use, and maintenance. 40 hour Construction Hazard Awareness Course provided by the Guam Contractors Association.

Level 5:
An Associate Safety Professional (ASP), Certified Safety Trained Supervisor (STS) and/or Construction Health & Safety Technician (CHST).
A minimum of 10 years safety work of a progressive nature with at least 5 years of experience on similar projects.
30-hour OSHA construction safety class or equivalent within the last 5 years.
An average of at least 24 hours of formal safety training each year for the past 5 years with training for competent person status for at least the following 4 areas of competency: Excavation; Scaffolding; Fall protection; Hazardous energy; Confined space; Health hazard recognition, evaluation and control of chemical, physical and biological agents; Personal protective equipment and clothing to include selection, use and maintenance. 40 hour Construction Hazard Awareness Course provided by the Guam Contractors Association.

1.6.1.2 Construction Safety Hazard Awareness Training

In addition to the above experience, education, and training requirements, the Site Safety and Health Officer (SSHO) must have completed the course entitled "Construction Safety Hazard Awareness Training for Contractors". If the SSHO does not have a current certification, they must obtain the course certification within sixty (60) calendar days from award. This course is periodically offered by Guam Contractors Association, General Contractors Association of Hawaii, Hawaii Building Industry Foundation, and Associated Builders and Contractors - Hawaii Chapter.

1.6.1.3 Competent Person for Confined Space Entry

Provide a competent person for confined space meeting the definition and requirements of EM 385-1-1.

1.6.1.4 Crane Operators

Meet the crane operators requirements in USACE EM 385-1-1, Section 16 and Appendix G. In addition, for mobile cranes with Original Equipment Manufacturer (OEM) rated capacitates of 50,000 pounds or greater, designate crane operators as qualified by a source that qualifies crane operators (i.e., union, a government agency, or and organization that tests and qualifies crane operators). Provide proof of current qualification.

1.6.2 Personnel Duties

1.6.2.1 Site Safety and Health Officer (SSHO)

a. Conduct daily safety and health inspections and maintain a written log which includes area/operation inspected, date of inspection, identified hazards, recommended corrective actions, estimated and actual dates of corrections. Attach safety inspection logs to the Contractors' daily production report.

b. Conduct mishap investigations and complete required reports. Maintain the OSHA Form 300 and Daily Production reports for prime and sub-contractors.

c. Maintain applicable safety reference material on the job site.

d. Attend the pre-construction conference, pre-work meetings including preparatory inspection meeting, and periodic in-progress meetings.

e. Implement and enforce accepted APPS and AHAs.

f. Maintain a safety and health deficiency tracking system that monitors outstanding deficiencies until resolution. Post a list of unresolved safety and health deficiencies on the safety bulletin board.

g. Ensure sub-contractor compliance with safety and health requirements.

h. Perform safety and occupational health management, surveillance, inspections, and safety enforcement for the project.

i. Perform as the safety and occupational health "competent person" as defined by USACE EM 385-1-1.

j. Be on-site at all times whenever work or testing is being performed.

k. Conduct and document safety inspections.

l. Unless otherwise specified in the Task Order, for projects requiring Level 4 competency or higher, the SSHO shall have no other duties other than safety and occupational health management, inspections, and enforcement on that project. In no case, however, will all three functions (Superintendent, QC and SSHO) be assigned to the same individual.

Failure to perform the above duties will result in dismissal of the superintendent and/or SSHO, and a project work stoppage. The project work stoppage will remain in effect pending approval of a suitable replacement.

1.6.3 Meetings

1.6.3.1 Preconstruction Conference

a. Contractor representatives who have a responsibility or significant role in accident prevention on the project shall attend the preconstruction conference. This includes the project superintendent, site safety and health officer, quality control supervisor, or any other

assigned safety and health professionals who participated in the development of the APP (including the Activity Hazard Analyses (AHAs) and special plans, program and procedures associated with it).

b. Discuss the details of the submitted APP to include incorporated plans, programs, procedures and a listing of anticipated AHAs that will be developed and implemented during the performance of the contract. This list of proposed AHAs will be reviewed at the conference and an agreement will be reached between the Contractor and the Contracting Officer's representative as to which phases will require an analysis. In addition, establish a schedule for the preparation, submittal, review, and acceptance of AHAs to preclude project delays.

c. Deficiencies in the submitted APP will be brought to the attention of the Contractor at the preconstruction conference, and the Contractor shall revise the plan to correct deficiencies and re-submit it for acceptance. Do not begin work until there is an accepted APP.

d. The functions of a Preconstruction conference may take place at the Post-Award Kickoff meeting for Design Build Contracts.

1.6.3.2 Safety Meetings

Conduct and document meetings as required by EM 385-1-1. Attach minutes showing contract title, signatures of attendees and a list of topics discussed to the Contractors' daily quality control report.

1.7 ACCIDENT PREVENTION PLAN (APP)

Use a qualified person to prepare the written site-specific APP. Prepare the APP in accordance with the format and requirements of USACE EM 385-1-1 and as supplemented herein. Cover all paragraph and subparagraph elements in USACE EM 385-1-1, Appendix A, "Minimum Basic Outline for Accident Prevention Plan" and show compliance with NASA NPG 8715.3. Specific requirements for some of the APP elements are described below. The APP shall be job-specific and address any unusual or unique aspects of the project or activity for which it is written. The APP shall interface with the Contractor's overall safety and health program. Include any portions of the Contractor's overall safety and health program referenced in the APP in the applicable APP element and made site-specific. The Government considers the Prime Contractor to be the "controlling authority" for all work site safety and health of the subcontractors. Contractors are responsible for informing their subcontractors of the safety provisions under the terms of the contract and the penalties for noncompliance, coordinating the work to prevent one craft from interfering with or creating hazardous working conditions for other crafts, and inspecting subcontractor operations to ensure that accident prevention responsibilities are being carried out. The APP shall be signed by the person and firm (senior person) preparing the APP, the Contractor, the on-site superintendent, the designated site safety and health officer and any designated CSP and/or CIH.

Submit the APP to the Contracting Officer 15 calendar days prior to the date of the preconstruction conference for acceptance. Work cannot proceed without an accepted APP.

Once accepted by the Contracting Officer, the APP and attachments will be enforced as part of the contract. Disregarding the provisions of this contract or the accepted APP will be cause for stopping of work, at the discretion of the Contracting Officer, until the matter has been rectified.

Once work begins, changes to the accepted APP shall be made with the knowledge and concurrence of the Contracting Officer, project superintendent, SSHO and quality control manager. Should any hazard become evident, stop work in the area, secure the area, and develop a plan to remove the hazard. Notify the

Contracting Officer within 24 hours of discovery. Eliminate/remove the hazard. In the interim, take all necessary action to restore and maintain safe working conditions in order to safeguard onsite personnel, visitors, the public (as defined by ASSE/SAFE A10.34,) and the environment.

Copies of the accepted plan will be maintained at the Contracting Officer's office and at the job site. Continuously reviewed and amended the APP, as necessary, throughout the life of the contract. Incorporate unusual or high-hazard activities not identified in the original APP as they are discovered.

1.7.1 EM 385-1-1 Contents

In addition to the requirements outlines in Appendix A of USACE EM 385-1-1, the following is required:

a. Names and qualifications (resumes including education, training, experience and certifications) of all site safety and health personnel designated to perform work on this project to include the designated site safety and health officer and other competent and qualified personnel to be used such as CSPs, CIHs, STSs, CHSTs. Specify the duties of each position.

b. Qualifications of competent and of qualified persons. As a minimum, designate and submit qualifications of competent persons for each of the following major areas: excavation; scaffolding; fall protection; hazardous energy; confined space; health hazard recognition, evaluation and control of chemical, physical and biological agents; personal protective equipment and clothing to include selection, use and maintenance.

c. Confined Space Entry Plan. Develop a confined space entry plan in accordance with USACE EM 385-1-1, applicable OSHA standards 29 CFR 1910, 29 CFR 1915, and 29 CFR 1926, and any other federal, state and local regulatory requirements identified in this contract. Identify the qualified person's name and qualifications, training, and experience. Delineate the qualified person's authority to direct work stoppage in the event of hazardous conditions. Include procedure for rescue by contractor personnel and the coordination with emergency responders. (If there is no confined space work, include a statement that no confined space work exists and none will be created.)

d. Crane Critical Lift Plan. Prepare and sign weight handling critical lift plans for lifts over 75 percent of the capacity of the crane or hoist (or lifts over 50 percent of the capacity of a barge mounted mobile crane's hoists) at any radius of lift; lifts involving more than one crane or hoist; lifts of personnel; and lifts involving non-routine rigging or operation, sensitive equipment, or unusual safety risks. Submit 15 calendar days prior to on-site work and include the requirements of USACE EM 385-1-1, paragraph 16.C.18. and the following:

(1) For lifts of personnel, demonstrate compliance with the requirements of 29 CFR 1926.550(g).

(2) For barge mounted mobile cranes, barge stability calculations identifying barge list and trim based on anticipated loading; and load charts based on calculated list and trim. The amount of list and trim shall be within the crane manufacturer's requirements.

e. Fall Protection and Prevention (FP&P) Plan. The plan shall be site specific and address all fall hazards in the work place and during different phases of construction. Address how to protect and prevent workers from falling to lower levels when they are exposed to fall hazards above 1.8 m (6 feet). A qualified person for fall protection shall prepare and sign the plan. Include fall protection and prevention

systems, equipment and methods employed for every phase of work, responsibilities, assisted rescue, self-rescue and evacuation procedures, training requirements, and monitoring methods. Revise the fall Protection and Prevention Plan every six months for lengthy projects, reflecting any changes during the course of construction due to changes in personnel, equipment, systems or work habits. Keep and maintain the accepted Fall Protection and Prevention Plan at the job site for the duration of the project. Include the Fall Protection and Prevention Plan in the Accident Prevention Plan (APP).

f. Occupant Protection Plan. The safety and health aspects of lead-based paint removal, prepared in accordance with Section 02 82 16.00 20 LEAD BASED PAINT HAZARD ABATEMENT, TARGET HOUSING & CHILD OCCUPIED FACILITIES 02 82 33.13 20 REMOVAL AND DISPOSAL OF LEAD CONTAINING PAINT.

g. Lead Compliance Plan. The safety and health aspects of lead work, prepared in accordance with Section 02 83 13.00 20 LEAD IN CONSTRUCTION.

h. Asbestos Hazard Abatement Plan. The safety and health aspects of asbestos work, prepared in accordance with Section 02 82 14.00 10 ASBESTOS ABATEMENT 02 82 16.00 20 ENGINEERING CONTROL OF ASBESTOS CONTAINING MATERIALS.

i. Site Safety and Health Plan. The safety and health aspects prepared in accordance with Section 01 35 29.13 HEALTH, SAFETY, AND EMERGENCY RESPONSE PROCEDURES FOR CONTAMINATED SITES.

j. PCB Plan. The safety and health aspects of Polychlorinated Biphenyls work, prepared in accordance with Sections 02 84 33 REMOVAL AND DISPOSAL OF POLYCHLORINATED BIPHENALS and 02 61 23 REMOVAL AND DISPOSAL OF PCB CONTAMINATED SOILS.

k. Site Demolition Plan. The safety and health aspects prepared in accordance with Section 02 41 00 DEMOLITION and referenced sources. Include engineering survey as applicable.

l. Excavation Plan. The safety and health aspects prepared in accordance with Section 31 00 00 EARTHWORK.

1.8 ACTIVITY HAZARD ANALYSIS (AHA)

The Activity Hazard Analysis (AHA) format shall be in accordance with USACE EM 385-1-1. Submit the AHA for review at least 15 calendar days prior to the start of each phase. Format subsequent AHAs as amendments to the APP. The analysis should be used during daily inspections to ensure the implementation and effectiveness of the activity's safety and health controls.

The AHA list will be reviewed periodically (at least monthly) at the Contractor supervisory safety meeting and updated as necessary when procedures, scheduling, or hazards change.

Develop the activity hazard analyses using the project schedule as the basis for the activities performed. Any activities listed on the project schedule will require an AHA. The AHAs will be developed by the contractor, supplier or subcontractor and provided to the prime contractor for submittal to the Contracting Officer.

1.9 DISPLAY OF SAFETY INFORMATION

Within 1 calendar day after commencement of work, erect a safety bulletin board at the job site. Include and maintain information on safety bulletin board as required by EM 385-1-1, section 01.A.06. Additional items required to be posted include:

a. Confined space entry permit.

b. Hot work permit.

1.10 SITE SAFETY REFERENCE MATERIALS

Maintain safety-related references applicable to the project, including those listed in the article "References." Maintain applicable equipment manufacturer's manuals.

1.11 EMERGENCY MEDICAL TREATMENT

Contractors will arrange for their own emergency medical treatment. Government has no responsibility to provide emergency medical treatment.

1.12 REPORTS

1.12.1 Accident Reports

a. Conduct an accident investigation for recordable injuries and illnesses, and property damage accidents resulting in at least $2,000 in damages, to establish the root cause(s) of the accident, complete the Navy Contractor Significant Incident Report (CSIR) form USACE Accident Report Form 3394 and provide the report to the Contracting Officer within 5 calendar days of the accident. The Contracting Officer will provide copies of any required or special forms.

b. Conduct an accident investigation for any weight handling equipment accident (including rigging gear accidents) to establish the root cause(s) of the accident, complete the WHE Accident Report (Crane and Rigging Gear) form and provide the report to the Contracting Officer within 30 calendar days of the accident. Do not proceed with crane operations until cause is determined and corrective actions have been implemented to the satisfaction of the contracting officer. The Contracting Officer will provide a blank copy of the accident report form.

1.12.2 Accident Notification

Notify the Contracting Officer as soon as practical, but not later than four hours, after any accident meeting the definition of Recordable Injuries or Illnesses or High Visibility Accidents, property damage equal to or greater than $2,000, or any weight handling equipment accident in accordance with NASA NPG 8621.1. Within notification include contractor name; contract title; type of contract; name of activity, installation or location where accident occurred; date and time of accident; names of personnel injured; extent of property damage, if any; extent of injury, if known, and brief description of accident (to include type of construction equipment used, PPE used, etc.). Preserve the conditions and evidence on the accident site until the Government investigation team arrives on-site and Government investigation is conducted.

1.12.3 Monthly Exposure Reports

Monthly exposure reporting to the Contracting Officer is required to be attached to the monthly billing request. This report is a compilation of employee-hours worked each month for all site workers, both prime and subcontractor. The Contracting Officer will provide copies of any special forms.

1.12.4 Crane Reports

Submit crane inspection reports required in accordance with USACE EM 385-1-1, Appendix H and as specified herein with Daily Reports of Inspections.

1.12.5 Certificate of Compliance

Provide a Certificate of Compliance for each crane entering an activity under this contract (see Contracting Officer for a blank certificate). State within the certificate that the crane and rigging gear meet applicable OSHA regulations (with the Contractor citing which OSHA regulations are applicable, e.g., cranes used in construction, demolition, or maintenance comply with 29 CFR 1926 and USACE EM 385-1-1 section 16 and Appendix H. Certify on the Certificate of Compliance that the crane operator(s) is qualified and trained in the operation of the crane to be used. Also certify that all of its crane operators working on the DOD activity have been trained in the proper use of all safety devices (e.g., anti-two block devices). Post certifications on the crane.

1.12.6 Third Party Certification of Barge-Mounted Mobile Cranes

Certify barge-mounted mobile cranes in accordance with 29 CFR 1919 by an OSHA accredited person.

1.13 HOT WORK

Submit and obtain a written permit prior to performing "Hot Work" (welding, cutting, etc.) or operating other flame-producing/spark producing devices, from the Fire Division. CONTRACTORS ARE REQUIRED TO MEET ALL CRITERIA BEFORE A PERMIT IS ISSUED. The Contractor will provide at least two (2) twenty (20) pound 4A:20 BC rated extinguishers for normal "Hot Work". All extinguishers shall be current inspection tagged, approved safety pin and tamper resistant seal. It is also mandatory to have a designated FIRE WATCH for any "Hot Work" done at this activity. The Fire Watch shall be trained in accordance with NFPA 51B and remain on-site for a minimum of 30 minutes after completion of the task or as specified on the hot work permit.

When starting work in the facility, require personnel to familiarize themselves with the location of the nearest fire alarm boxes and place in memory the emergency Fire Division phone number. ANY FIRE, NO MATTER HOW SMALL, SHAL BE REPORTED TO THE RESPONSIBLE FIRE DIVISION IMMEDIATELY.

Obtain services from a NFPA Certified Marine Chemist for "HOT WORK" within or around flammable materials (such as fuel systems, welding/cutting on fuel pipes) or confined spaces (such as sewer wet wells, manholes, vaults, etc.) that have the potential for flammable or explosive atmospheres.

1.14 RADIATION SAFETY REQUIREMENTS

License Certificates for radiation materials and equipment shall be submitted to the Contracting Officer for all specialized material and equipment that could cause fatal harm to construction personnel or to the construction project.

Workers shall be protected from radiation exposure in accordance with 10 CFR 20 Standards for Protection Against Radiation.

Loss of radioactive material shall be reported immediately to the Contracting Officer.

Actual exposure of the radiographic film or unshielding the source shall not be initiated until after 5 p.m. on weekdays.

In instances where radiography is scheduled near or adjacent to buildings or areas having limited access or one-way doors, no assumptions shall be made as to building occupancy. Where necessary, the Contracting Officer will direct the Contractor to conduct an actual building entry, search, and alert. Where removal of personnel from such a building cannot be accomplished and it is

otherwise safe to proceed with the radiography, a fully instructed employee shall be positioned inside such building or area to prevent exiting while external radiographic operations are in process.

1.15 FACILITY OCCUPANCY CLOSURE

Streets, walks, and other facilities occupied and used by the Government shall not be closed or obstructed without written permission from the Contracting Officer.

1.16 GAS PROTECTION

Contractor shall have one or more employees properly trained in operation of gas testing equipment and formally qualified as gas inspectors who shall be on duty during times workmen are in confined spaces. Their primary functions shall be to test for gas and operate testing equipment. Unless equipment of constant supervisory type with automatic alarm is employed, gas tests shall be made at least every 2 hours or more often when character of ground or experience indicates gas may be encountered. A gas test shall be made before workmen are permitted to enter the excavation after an idle period exceeding one-half hour.

Readings shall be permanently recorded daily, indicating the concentration of gas, point of test, and time of test. Submit copies of the gas test readings to the Contracting Officer at the end of each work day.

Special requirements, coordination, and precautions will apply to areas that contain a hazardous atmosphere or, by virtue of their use or physical character, may be oxygen deficient. A check by Government is required prior to entering confined space. Surveillance and monitoring shall be required in these types of work spaces by both Contractor and Government personnel.

1.17 HIGH NOISE LEVEL PROTECTION

Operations performed by the Contractor that involve the use of equipment with output of high noise levels (jackhammers, air compressors, and explosive device activated tools) shall be scheduled for. Use of any such equipment shall be approved in writing by the Contracting Officer prior to commencement of work.

1.18 SEVERE STORM PLAN

In the event of a severe storm warning, the Contractor must:

a. Secure outside equipment and materials and place materials that could be damaged in protected areas.

b. Check surrounding area, including roof, for loose material, equipment, debris, and other objects that could be blown away or against existing facilities.

c. Ensure that temporary erosion controls are adequate.

PART 2 PRODUCTS

2.1 CONFINED SPACE SIGNAGE

Provide permanent signs integral to or securely attached to access covers for new permit-required confined spaces. Signs wording: "DANGER--PERMIT-REQUIRED CONFINED SPACE - DO NOT ENTER -" in bold letters a minimum of 25 mm one inch in height and constructed to be clearly legible with all paint removed. The signal word "DANGER" shall be red and readable from 1520 mm 5 feet.

2.2 FALL PROTECTION ANCHORAGE

Leave in place fall protection anchorage, conforming to ASSE/SAFE Z359.1, installed under the supervision of a qualified person in fall protection, for continued customer use and so identified by signage stating the capacity of the anchorage (strength and number of persons who may be tied-off to it at any one time).

PART 3 EXECUTION

3.1 CONSTRUCTION AND/OR OTHER WORK

Comply with USACE EM 385-1-1, NFPA 241, the APP, the AHA, Federal and/or State OSHA regulations, and other related submittals and activity fire and safety regulations. The most stringent standard prevails. In addition, all personnel, including visitors, on the jobsite shall wear high visibility safety apparel (garment, vest, or a harness of retroreflective and fluorescent material) meeting American National Standards Institute (ANSI)/International Safety Equipment Association (ISEA) 107-2004 requirements. As a minimum, all personnel shall wear ANSI/ISEA 107-2004 Class I compliant apparel. When risk level exceeds those of Class I, the proper Class II or Class III safety apparel shall be worn.

3.1.1 Hazardous Material Use

Each hazardous material must receive approval prior to being brought onto the job site or prior to any other use in connection with this contract. Allow a minimum of 10 working days for processing of the request for use of a hazardous material.

3.1.2 Hazardous Material Exclusions

Notwithstanding any other hazardous material used in this contract, radioactive materials or instruments capable of producing ionizing/non-ionizing radiation (with the exception of radioactive material and devices used in accordance with USACE EM 385-1-1 such as nuclear density meters for compaction testing and laboratory equipment with radioactive sources) as well as materials which contain asbestos, mercury or polychlorinated biphenyls, di-isocynates, lead-based paint are prohibited. The Contracting Officer, upon written request by the Contractor, may consider exceptions to the use of any of the above excluded materials.

3.1.3 Unforeseen Hazardous Material

The design should have identified materials such as PCB, lead paint, and friable and non-friable asbestos. If additional material, not indicated, that may be hazardous to human health upon disturbance during construction operations is encountered, stop that portion of work and notify the Contracting Officer immediately. Within 14 calendar days the Government will determine if the material is hazardous. If material is not hazardous or poses no danger, the Government will direct the Contractor to proceed without change. If material is hazardous and handling of the material is necessary to accomplish the work, the Government will issue a modification pursuant to "FAR 52.243-4, Changes" and "FAR 52.236-2, Differing Site Conditions."

3.2 PRE-OUTAGE COORDINATION MEETING

Contractors are required to apply for utility outages at least 30 days in advance. As a minimum, the request should include the location of the outage, utilities being affected, duration of outage and any necessary sketches. Special requirements for electrical outage requests are contained elsewhere in this specification section. Once approved, and prior to beginning work on the utility system requiring shut down, attend a pre-outage coordination meeting

with the Contracting Officer and the Base Operations Support Contract to review the scope of work and the lock-out/tag-out procedures for worker protection. No work will be performed on energized electrical circuits unless proof is provided that no other means exist.

3.3 SAFETY LOCKOUT/TAGOUT PROCEDURES

Contractor shall ensure that each employee is familiar with and complies with these procedures and 29 CFR 1910.147.

Contracting Officer will, at the Contractor's request, apply lockout/tagout tags and take other actions that, because of experience and knowledge, are known to be necessary to make the particular equipment safe to work on.

No person, regardless of position or authority, shall operate any switch, valve, or equipment that has an official lockout/tagout tag attached to it, nor shall such tag be removed except as provided in this section.

No person shall work on any equipment that requires a lockout/tagout tag unless he, his immediate supervisor, project leader, or a subordinate has in his possession the stubs of the required lockout/tagout tags.

When work is to be performed on electrical circuits, only qualified personnel shall perform work on electrical circuits.

A supervisor who is required to enter an area protected by a lockout/tagout tag will be considered a member of the protected group provided he notifies the holder of the tag stub each time he enters and departs from the protected area.

Identification markings on building light and power distribution circuits shall not be relied on for established safe work conditions.

Before clearance will be given on any equipment other than electrical (generally referred to as mechanical apparatus), the apparatus, valves, or systems shall be secured in a passive condition with the appropriate vents, pins, and locks.

Pressurized or vacuum systems shall be vented to relieve differential pressure completely.

Vent valves shall be tagged open during the course of the work.

Where dangerous gas or fluid systems are involved, or in areas where the environment may be oxygen deficient, system or areas shall be purged, ventilated, or otherwise made safe prior to entry.

3.3.1 Tag Placement

Lockout/tagout tags shall be completed in accordance with the regulations printed on the back thereof and attached to any device which, if operated, could cause an unsafe condition to exist.

If more than one group is to work on any circuit or equipment, the employee in charge of each group shall have a separate set of lockout/tagout tags completed and properly attached.

When it is required that certain equipment be tagged, the Government will review the characteristics of the various systems involved that affect the safety of the operations and the work to be done; take the necessary actions, including voltage and pressure checks, grounding, and venting, to make the system and equipment safe to work on; and apply such lockout/tagout tags to those switches, valves, vents, or other mechanical devices needed to

preserve the safety provided. This operation is referred to as "Providing Safety Clearance."

3.3.2 Tag Removal

When any individual or group has completed its part of the work and is clear of the circuits or equipment, the supervisor, project leader, or individual for whom the equipment was tagged shall turn in his signed lockout/tagout tag stub to the Contracting Officer. That group's or individual's lockout/tagout tags on equipment may then be removed on authorization by the Contracting Officer.

3.4 FALL HAZARD PROTECTION AND PREVENTION PROGRAM

Establish a fall protection and prevention program, for the protection of all employees exposed to fall hazards. Within the program include company policy, identify responsibilities, education and training requirements, fall hazard identification, prevention and control measures, inspection, storage, care and maintenance of fall protection equipment and rescue and evacuation procedures.

3.4.1 Training

Institute a fall protection training program. As part of the Fall Hazard Protection and Prevention Program, provide training for each employee who might be exposed to fall hazards. Provide training by a competent person for fall protection in accordance with USACE EM 385-1-1, section 21.A.16.

3.4.2 Fall Protection Equipment and Systems

Enforce use of the fall protection equipment and systems designated for each specific work activity in the Fall Protection and Prevention Plan and/or AHA at all times when an employee is exposed to a fall hazard. Protect employees from fall hazards as specified in EM 385-1-1, section 21. In addition to the required fall protection systems, safety skiff, personal floatation devices, life rings etc., are required when working above or next to water in accordance with USACE EM 385-1-1, paragraphs 05.H. and 05.I. Personal fall arrest systems are required when working from an articulating or extendible boom, swing stages, or suspended platform. In addition, personal fall arrest systems are required when operating other equipment such as scissor lifts if the work platform is capable of being positioned outside the wheelbase. The need for tying-off in such equipment is to prevent ejection of the employee from the equipment during raising, lowering, or travel. Fall protection must comply with 29 CFR 1926.500, Subpart M, USACE EM 385-1-1 and ASSE/SAFE A10.32.

3.4.2.1 Personal Fall Arrest Equipment

Personal fall arrest equipment, systems, subsystems, and components shall meet ASSE/SAFE Z359.1. Only a full-body harness with a shock-absorbing lanyard or self-retracting lanyard is an acceptable personal fall arrest body support device. Body belts may only be used as a positioning device system (for uses such as steel reinforcing assembly and in addition to an approved fall arrest system). Harnesses shall have a fall arrest attachment affixed to the body support (usually a Dorsal D-ring) and specifically designated for attachment to the rest of the system. Only locking snap hooks and carabiners shall be used. Webbing, straps, and ropes shall be made of synthetic fiber. The maximum free fall distance when using fall arrest equipment shall not exceed 1.8 m 6 feet. The total fall distance and any swinging of the worker (pendulum-like motion) that can occur during a fall shall always be taken into consideration when attaching a person to a fall arrest system.

3.4.3 Fall Protection for Roofing Work

Implement fall protection controls based on the type of roof being constructed and work being performed. Evaluate the roof area to be accessed for its structural integrity including weight-bearing capabilities for the projected loading.

a. Low Sloped Roofs:

(1) For work within 1.8 m (6 feet) of an edge, on low-slope roofs, Protect personnel from falling by use of personal fall arrest systems, guardrails, or safety nets. A safety monitoring system is not adequate fall protection and is not authorized.

(2) For work greater than 1.8 m (6 feet) from an edge, erect and install warning lines in accordance with 29 CFR 1926.500 and USACE EM 385-1-1.

b. Steep-Sloped Roofs: Work on steep-sloped roofs requires a personal fall arrest system, guardrails with toe-boards, or safety nets. This requirement also includes residential or housing type construction.

3.4.4 Existing Anchorage

Certified (or re-certified) by a qualified person for fall protection existing anchorages, to be used for attachment of personal fall arrest equipment in accordance with ASSE/SAFE Z359.1. Exiting horizontal lifeline anchorages must be certified (or re-certified) by a registered professional engineer with experience in designing horizontal lifeline systems.

3.4.5 Horizontal Lifelines

Design, install, certify and use under the supervision of a qualified person horizontal lifelines for fall protection as part of a complete fall arrest system which maintains a safety factor of 2 (29 CFR 1926.500).

3.4.6 Guardrails and Safety Nets

Design, install and use guardrails and safety nets in accordance with EM 385-1-1 and 29 CFR 1926 Subpart M.

3.4.7 Rescue and Evacuation Procedures

When personal fall arrest systems are used, the contractor must ensure that the mishap victim can self-rescue or can be rescued promptly should a fall occur. Prepare a Rescue and Evacuation Plan and include a detailed discussion of the following: methods of rescue; methods of self-rescue; equipment used; training requirement; specialized training for the rescuers; procedures for requesting rescue and medical assistance; and transportation routes to a medical facility. Include the Rescue and Evacuation Plan within the Activity Hazard Analysis (AHA) for the phase of work, in the Fall Protection and Prevention (FP&P) Plan, and the Accident Prevention Plan (APP).

3.5 SCAFFOLDING

Provide employees with a safe means of access to the work area on the scaffold. Climbing of any scaffold braces or supports not specifically designed for access is prohibited. Access scaffold platforms greater than 6 m (20 feet) maximum in height by use of a scaffold stair system. Do not use vertical ladders commonly provided by scaffold system manufacturers for accessing scaffold platforms greater than 6 m (20 feet) maximum in height. The use of an adequate gate is required. Ensure that employees are qualified to perform scaffold erection and dismantling. Do not use scaffold without the capability of supporting at least four times the maximum intended load or without appropriate fall protection as delineated in the accepted fall

protection and prevention plan. Stationary scaffolds must be attached to structural building components to safeguard against tipping forward or backward. Give special care to ensure scaffold systems are not overloaded. Side brackets used to extend scaffold platforms on self-supported scaffold systems for the storage of material is prohibited. The first tie-in shall be at the height equal to 4 times the width of the smallest dimension of the scaffold base. Place work platforms on mud sills. Scaffold or work platform erectors shall have fall protection during the erection and dismantling of scaffolding or work platforms that are more than six feet. Delineate fall protection requirements when working above six feet or above dangerous operations in the Fall Protection and Prevention (FP&P) Plan and Activity Hazard Analysis (AHA) for the phase of work.

3.5.1 Stilts

The use of stilts for gaining additional height in construction, renovation, repair or maintenance work is prohibited.

3.6 EQUIPMENT

3.6.1 Material Handling Equipment

a. Material handling equipment such as forklifts shall not be modified with work platform attachments for supporting employees unless specifically delineated in the manufacturer's printed operating instructions.

b. The use of hooks on equipment for lifting of material must be in accordance with manufacturer's printed instructions.

c. Operators of forklifts or power industrial trucks shall be licensed in accordance with OSHA.

3.6.2 Weight Handling Equipment

a. Equip cranes and derricks as specified in EM 385-1-1, section 16.

b. Crane Critical Lift Plan: Prepare and sign weight handling critical lift plans for lifts over 75 percent of the capacity of the crane or hoist (or lifts over 50 percent of the capacity of a barge mounted mobile crane's hoists) at any radius of lift; lifts involving more than one crane or hoist; lifts of personnel; and lifts involving non-routine rigging or operation, sensitive equipment, or unusual safety risks. The plan shall be submitted 15 calendar days prior to on-site work and include the requirements of USACE EM 385-1-1, paragraph 16.C.18. and the following:

(1) For lifts of personnel, the plan shall demonstrate compliance with the requirements of 29 CFR 1926.550(g).
(2) For barge mounted mobile cranes, barge stability calculations identifying barge list and trim based on anticipated loading; and load charts based on calculated list and trim. The amount of list and trim shall be within the crane manufacturer's requirements.

c. Certificate of Compliance: The Contractor shall provide a Certificate of Compliance for each crane entering an activity under this contract (see Contracting Officer for a blank certificate). Certificate shall state that the crane and rigging gear meet applicable OSHA regulations (with the Contractor citing which OSHA regulations are applicable, e.g., cranes used in construction, demolition, or maintenance shall comply with 29 CFR 1926 and USACE EM 385-1-1 section

16 and Appendix H. Certify on the Certificate of Compliance that the crane operator(s) is qualified and trained in the operation of the crane to be used. The Contractor shall also certify that all of its crane operators working on the DOD activity have been trained in the proper use of all safety devices (e.g., anti-two block devices). These certifications shall be posted on the crane.

d. Notify the Contracting Officer 15 days in advance of any cranes entering the activity so that necessary quality assurance spot checks can be coordinated. Prior to cranes entering federal activities, a Crane Access Permit must be obtained from the Contracting Officer. A copy of the permitting process will be provided at the Preconstruction Conference. Contractor's operator shall remain with the crane during the spot check.

e. Comply with the crane manufacturer's specifications and limitations for erection and operation of cranes and hoists used in support of the work. Perform erection under the supervision of a designated person (as defined in ASME B30.5). Perform all testing in accordance with the manufacturer's recommended procedures.

f. Comply with ASME B30.5 for mobile and locomotive cranes, ASME B30.22 for articulating boom cranes, ASME B30.3 for construction tower cranes, and ASME B30.8 for floating cranes and floating derricks.

g. Under no circumstance shall a Contractor make a lift at or above 90% of the cranes rated capacity in any configuration.

h. When operating in the vicinity of overhead transmission lines, operators and riggers shall be alert to this special hazard and follow the requirements of USACE EM 385-1-1 section 11 and ASME B30.5 or ASME B30.22 as applicable.

i. Do not crane suspended personnel work platforms (baskets) unless the Contractor proves that using any other access to the work location would provide a greater hazard to the workers or is impossible. Do not lift personnel with a line hoist or friction crane.

j. Inspect, maintain, and recharge portable fire extinguishers as specified in NFPA 10, Standard for Portable Fire Extinguishers.

k. All employees must keep clear of loads about to be lifted and of suspended loads.

l. Use cribbing when performing lifts on outriggers.

m. The crane hook/block must be positioned directly over the load. Side loading of the crane is prohibited.

n. A physical barricade must be positioned to prevent personnel from entering the counterweight swing (tail swing) area of the crane.

o. Certification records which include the date of inspection, signature of the person performing the inspection, and the serial number or other identifier of the crane that was inspected shall always be available for review by Contracting Officer personnel.

p. Written reports listing the load test procedures used along with any repairs or alterations performed on the crane shall be available for review by Contracting Officer personnel.

q. Certify that all crane operators have been trained in proper use of all safety devices (e.g. anti-two block devices).

r. Take steps to ensure that wind speed does not contribute to loss of control of the load during lifting operations. Prior to conducting lifting operations set a maximum wind speed at which a crane can be safely operated based on the equipment being used, the load being lifted, experience of operators and riggers, and hazards on the work site. This maximum wind speed determination shall be included as part of the activity hazard analysis plan for that operation.

3.7.3 Equipment and Mechanized Equipment

a. Proof of qualifications for operator shall be kept on the project site for review.

b. Manufacture specifications or owner's manual for the equipment shall be on-site and reviewed for additional safety precautions or requirements that are sometimes not identified by OSHA or USACE EM 385-1-1. Incorporate such additional safety precautions or requirements into the AHAs.

c. Submit a Machinery & Mechanized Equipment Certification Form for acceptance by the Contracting Officer prior to being placed into use. A copy of the certification form will be provided during the Pre-construction Conference.

3.7.4 USE OF EXPLOSIVES

Explosives shall not be used or brought to the project site without prior written approval from the Contracting Officer. Such approval shall not relieve the Contractor of responsibility for injury to persons or for damage to property due to blasting operations.

Storage of explosives, when permitted on Government property, shall be only where directed and in approved storage facilities. These facilities shall be kept locked at all times except for inspection, delivery, and withdrawal of explosives.

Explosive work shall be performed in accordance with NASA NSS 1740.12. This document is available at:

http://www.hq.nasa.gov/office/codeq/doctree/871912.htm

3.8 EXCAVATIONS

Perform soil classification by a competent person in accordance with 29 CFR 1926.

3.8.1 Utility Locations

Prior to digging, the appropriate digging permit must be obtained through the BOS contractor. All underground utilities in the work area must be positively identified and marked by the BOS Contractor (unless otherwise specified in the task order). Any markings made during the utility investigation must be maintained throughout the contract by the construction contractor. Locate utilities in accordance with Section 01 14 00.05 20 WORK RESTRICTIONS FOR DESIGN-BUILD and 01 50 00.05 20 TEMPORARY FACILITIES CONTROL FOR DB.

3.8.2 Utility Location Verification

The Contractor must physically verify underground utility locations by hand digging using wood or fiberglass handled tools when any adjacent construction work is expected to come within three feet of the underground

system. Digging within 610 mm 2 feet of a known utility must not be performed by means of mechanical equipment; hand digging shall be used. If construction is parallel to an existing utility expose the utility by hand digging every 30.5 m (100 feet) if parallel within 1.5 m (5 feet) of the excavation.

3.8.3 Shoring Systems

Trench and shoring systems must be identified in the accepted safety plan and AHA. Manufacture tabulated data and specifications or registered engineer tabulated data for shoring or benching systems shall be readily available on-site for review. Job-made shoring or shielding must have the registered professional engineer stamp, specifications, and tabulated data. Extreme care must be used when excavating near direct burial electric underground cables.

3.8.4 Trenching Machinery

Operate trenching machines with digging chain drives only when the spotters/laborers are in plain view of the operator. Provide operator and spotters/laborers training on the hazards of the digging chain drives with emphasis on the distance that needs to be maintained when the digging chain is operating. Keep documentation of the training on file at the project site.

3.9 UTILITIES WITHIN CONCRETE SLABS

Utilities located within concrete slabs or pier structures, bridges, and the like, are extremely difficult to identify due to the reinforcing steel used in the construction of these structures. Whenever contract work involves concrete chipping, saw cutting, or core drilling, the existing utility location must be coordinated with station utility departments in addition to a private locating service. Outages to isolate utility systems must be used in circumstances where utilities are unable to be positively identified. The use of historical drawings does not alleviate the contractor from meeting this requirement.

3.10 ELECTRICAL

3.10.1 Conduct of Electrical Work

Underground electrical spaces must be certified safe for entry before entering to conduct work. Cables that will be cut must be positively identified and de-energized prior to performing each cut. Positive cable identification must be made prior to submitting any outage request for electrical systems. Arrangements are to be coordinated with the Contracting Officer and Station Utilities for identification. The Contracting Officer will not accept an outage request until the Contractor satisfactorily documents that the circuits have been clearly identified. Perform all high voltage cable cutting remotely using hydraulic cutting tool. When racking in or live switching of circuit breakers, no additional person other than the switch operator will be allowed in the space during the actual operation. Plan so that work near energized parts is minimized to the fullest extent possible. Use of electrical outages clear of any energized electrical sources is the preferred method. When working in energized substations, only qualified electrical workers will be permitted to enter. When work requires Contractor to work near energized circuits as defined by the NFPA 70, high voltage personnel must use personal protective equipment that includes, as a minimum, electrical hard hat, safety shoes, insulating gloves with leather protective sleeves, fire retarding shirts, coveralls, face shields, and safety glasses. In addition, provide electrical arc flash protection for personnel as required by NFPA 70E. Insulating blankets, hearing protection, and switching suits may also be required, depending on the specific job and as delineated in the Contractor's AHA.

3.10.2 Portable Extension Cords

Size portable extension cords in accordance with manufacturer ratings for the tool to be powered and protected from damage. Immediately removed from service all damaged extension cords. Portable extension cords shall meet the requirements of NFPA 70.

3.11 WORK IN CONFINED SPACES

Comply with the requirements in Section 06.I of USACE EM 385-1-1, OSHA 29 CFR 1910.146 and OSHA 29 CFR 1926.21(b)(6). Any potential for a hazard in the confined space requires a permit system to be used.

a. Entry Procedures. Prohibit entry into a confined space by personnel for any purpose, including hot work, until the qualified person has conducted appropriate tests to ensure the confined or enclosed space is safe for the work intended and that all potential hazards are controlled or eliminated and documented. (See Section 06.I.06 of USACE EM 385-1-1 for entry procedures.) All hazards pertaining to the space shall be reviewed with each employee during review of the AHA.

b. Forced air ventilation is required for all confined space entry operations and the minimum air exchange requirements must be maintained to ensure exposure to any hazardous atmosphere is kept below its' action level.

c. Sewer wet wells require continuous atmosphere monitoring with audible alarm for toxic gas detection.

-- End of Section --

SECTION 01 45 00.05 20

DESIGN AND CONSTRUCTION QUALITY CONTROL
11/07

PART 1 GENERAL

1.1 REFERENCES

The publications listed below form a part of this specification to the extent referenced. The publications are referred to in the text by the basic designation only.

ASTM INTERNATIONAL (ASTM)

ASTM E 329	(2002) Agencies Engaged in the Testing and/or Inspection of Materials Used in Construction

U.S. ARMY CORPS OF ENGINEERS (USACE)

EM 385-1-1	(2008) Safety -- Safety and Health Requirements

U.S. GREEN BUILDING COUNCIL (USGBC)

LEED-NC	(2002; R 2005) Leadership in Energy and Environmental Design ™ Green Building Rating System for New Construction (LEED-NC)

1.2 SUBMITTALS

The use of a "G" following a submittal indicates that a Government approval action is required. Submit the following in accordance with Section 01 33 10.05 20 DESIGN SUBMITTAL PROCEDURES and Section 01 33 00.05 20 CONSTRUCTION SUBMITTAL PROCEDURES.

SD-01 Preconstruction Submittals

Design Quality Control (DQC) Plan; G

Submit a DQC Plan prior to the Post Award Kickoff Meeting.

Construction Quality Control (CQC) Plan; G

Submit a Construction QC Plan prior to start of construction.

Commissioning Plan; G

Submit a Commissioning Plan within 60 days of approval of Cx agent.

SD-07 Certificates

Preliminary Inspections and Final Acceptance Testing; G

Final Life Safety/Fire Protection Certification; G

IBC Special Inspections Certification; G

SD-11 Closeout Submittals

Summary Commissioning Report; G

Training Course Outline; G

Training Video Recording; G

1.3 QC PROGRAM REQUIREMENTS

Establish and maintain a QC program that is administered by a Design and Construction Quality Control organization, using Quality Control (Design and Construction) Plans, Commissioning Plans and Reports, meetings, a Coordination and Mutual Understanding Meeting, three phases of control, submittal review and approval, testing, completion inspections, and QC certifications and documentation necessary to provide design, materials, equipment, workmanship, fabrication, construction and operations which comply with the requirements of this Contract. The QC program shall cover on-site and off-site work. No construction work or testing may be performed unless the QC Manager is on the work site; however, construction work may continue if the QC Manager is conducting QC related work for the specific project on base installations. QCM may be absent from the worksite in performance of his QCM duties provided no testing is being performed nor is any work being hidden. QCM must be available on the jobsite within one hour when requested by the designated government representatives.

1.3.1 Design and Construction Quality Control Plans

The Contractor shall provide a project specific Design Quality Control (DQC) Plan and Construction Quality Control (CQC) Plan, for review and approval by the Government. The Contractor shall perform no design until the DQC Plan is approved and no construction until the CQC Plan is approved. The Contractor's plan shall include the following:

a. The QC organization for this contract, including member resumes.

b. A letter from an officer of the company designating the QC Manager, Alternate QC Manager, and Commissioning Authority, and their authority.

c. QC Manager qualifications.

d. Commissioning Authority qualifications and certification.

e. List of Definable Features of Work (DFOW) including list of design submittal packaging. DFOW is a task that is separate and distinct from other tasks and has control requirements and work crews unique to the task.

f. For the QC Plan, a plan to implement the "Three Phases of Control" for each DFOW.

g. For the QC Plan, a testing Plan, log and list of personnel and accredited laboratories that will perform tests. Construction materials testing laboratories must be accredited by a laboratory accreditation authority and will be required to submit a copy of the Certificate of Accreditation and Scope of Accreditation with the testing plan.

h. Submittal Log including design submittals, listing personnel who will review submittals and noting submittals for Government review.

i. Procedures for submitting and reviewing variations prior to submission to the Government.

j. As a part of the Contractor’s plan, a statement of Special Inspections shall be prepared by the Designer of Record (DOR) describing a complete list of materials and work requiring special inspections, the inspections to be performed and any applicable quality assurance plans and structural observations. The Contractor’s plan shall for implement the applicable requirements of the International Building Code (IBC), Chapter 17 "Structural Tests and Special Inspections." The plan shall include a listing of the individuals, approved agencies or firms that will be retained for conducting the required special inspections accompanied by a description of individual inspector's experience and a copy of all required certifications. Structural tests and special inspections, as outlined in Chapter 17 of the IBC, shall be conducted by individuals and agents that are under the direct supervision of a Registered Design Professional (RDP) and meet the requirements of ASTM E 329.

k. A plan for assuring the proper design, construction, installation of all life safety and fire protection features across all disciplines and trades. Examples of life safety and fire protection features include, but are not limited to, water distribution systems including fire pumps and fire hydrants, fire resistive assemblies such as fire rated walls/partitions and spray-applied fire proofing of structural components, fire alarm and detection systems, fire suppression and standpipe systems, means of egress components, emergency and exit lighting fixtures. As a part of the plan, a statement of Special Inspections shall be prepared by the Fire Protection Engineer Designer of Record (DOR) describing a complete list of materials and work requiring special inspections, the inspections to be performed and any applicable quality assurance plans and fire protection observations. The plan will include a listing of the individuals, approved agencies or firms that will be retained for conducting the required special inspections accompanied by a description of individual inspector’s experience and a copy of all required certifications.

l. For the DQC plan, submit a formal Communication Plan the indicates the frequency of design meetings and what information is covered in those meetings, key design decision points tied to the Network Analysis Scheduled and how the DOR plans to include the Government in those decisions, peer review procedures, interdisciplinary coordination, design review procedures, comment resolution, etc.

The Communication Plan will emphasize key decisions and possible problems the Contractor and Government may encounter during the design phase of the project. Provide a plan to discuss design alternatives and design coordination with the stakeholders at the key decision points as they arise on the project. Identify individual stakeholders and suggested communication methods that will be employed to expedite and facilitate each anticipated critical decision. Communication methods may include: Concept Design Workshop, over-the-shoulder review meetings, presentation at client's office, lifecycle cost analysis presentation, technical phone conversation, and formal review meeting. The design portion of the Communication Plan must to be written by the Commissioning Authority and confirmed during the Post Award Kick off Partnering. Update the Communication Plan at every Partnering meeting.

m. For the DQC Plan, procedures for insuring the design documents are submitted in accordance with UFC 1-300-09N, *Design Procedures* and other procedures to ensure disciplines have been properly coordinated to eliminate conflicts.

n. For the DQC Plan, a list of design subcontractors and the scope of the work which each firm will accomplish.

1.3.2 Commissioning Plan

The Contractor shall provide a project specific Commissioning Plan for review and acceptance by the Government per task order requirements. Develop and submit the Commissioning Plan to define the on-site activities and roles and responsibilities for commissioning all building systems required by the Project Program paragraph entitled, Building Commissioning. The Commissioning Plan shall include all items required by the LEED-NC version 2.2 and shall also include the following:

a. Provide a description of the Commissioning Authority's roles and responsibilities as well as organizational relationships with the Contractor's QC Manager and verification and testing personnel.

b. Provide a schedule of inspections during construction that includes periodic inspections by the system designer. Specify a minimum of three inspections.

c. Define the sequence and schedule for starting and balancing air distribution systems to ensure construction materials, such as architectural finishes, are installed under the appropriate environmental conditions. Also address the procedure that will be used to "dry out" the structure.

d. Provide a schedule for all verification and functional performance tests. The Commissioning Authority shall be present for all functional performance tests.

e. Provide a schedule detailing training sessions for Government personnel. Training sessions are to address maintenance and operation of systems required to be commissioned.

1.3.3 Summary Commissioning Report

The Commissioning Authority shall provide a Summary Commissioning Report. The Summary Commissioning Report shall include all items required by LEED-NC version 2.2.

1.4 QC ORGANIZATION

The QC Manager shall manage the QC organization and shall report to the Project Superintendent. The QC Manager, Project Superintendent and Project Manager must work together effectively. Although the QC Manager is the primary individual responsible for quality control, all individuals will be held responsible for the quality of work on the job.

1.4.1 QC and Alternative QC Manager

QC and Alternative QC Manager qualifications:

a. Complete the course entitled "Construction Quality Management (CQM) for Contractors." and shall maintain a current certificate.

b. Five years of combined experience as a Superintendent, QC Manager, Project Manager, or Project Engineer on similar size and type construction contracts, and at least two years experience as a QC Manager.

c. Familiar with requirements of USACE EM 385-1-1, and experience in the areas of hazard identification and safety compliance.

QC and Alternative QC Manager responsibilities:

a. Participate in the Post Award Kick-off, Partnering, Preconstruction, Design Development, and Coordination and Mutual Understanding Meetings.

b. Implement the "Three Phase of Control" plan for each DFOW and notify the Contracting Officer at least 3 business days in advance of each Preparatory and Initial Phase meeting. Submit respective checklists to the Contracting Officer the next business day.

c. Ensure that no construction begins before the DOR has finalized the design for that segment of work, and construction submittals are approved as required.

d. Inspect all work and rework, using International Conference of Building Officials certified QC specialists as applicable, to ensure its compliance with contract requirements. Maintain a rework log.

e. Immediately stop any segment of work, which does not comply with the contract and plans and specifications, and direct the removal and replacement of any defective work.

f. Remove any individual from the site who fails to perform their work in a skillful, safe and workmanlike manner or whose work does not comply with the contract plans and specifications.

g. Prepare daily QC Reports.

h. Ensure that Contractor Production Reports are prepared daily.

i. Hold weekly QC meetings with the Commissioning Authority, DOR (or representative), Superintendent and the Contracting Officer; participation shall be suitable for the phase of work. Distribute minutes of these meetings.

j. Ensure that design and construction submittals are reviewed and approved, as required by the contract, prior to allowing material on site and work to proceed with these items. Maintain a submittal log.

k. Update As-built drawings daily, maintaining up-to-date set on site.

l. Maintain a testing plan and log. Ensure that all testing is performed in accordance with the contract. Review all test reports and notify the Contracting Officer of all deficiencies, along with a proposal for corrective action.

m. Maintain rework log on site, noting dates deficiency identified, and date corrected.

n. Certify and sign statement on each invoice that all work to be paid under the invoice has been completed in accordance with contract requirements.

o. Perform Punch-out and participate in Pre-final and Final Inspections. Submit list of deficiencies to the Contracting Officer for each inspection. Correct all deficiencies prior to the Final inspection. Notify Contracting Officer prior to final inspection to establish a schedule date acceptable by the Contracting Officer.

p. Ensure that all required keys, operation and maintenance manuals, warranty certificates, and the As-built drawings are correct and complete, in accordance with the contract, and submitted to the Contracting Officer.

q. Assure that all applicable tests, special inspections, and observations required by the contract are performed.

r. Coordinate all factory and on-site testing, Testing Laboratory personnel, QC Specialists, and any other inspection and testing personnel required by this Contract.

s. Notify the Contracting Officer of any proposed changes to the QC plan.

t. Retain a copy of approved submittals at project site, including Contractor's copy of approved samples.

u. Update the Performance Assessment Plan as described in the UFGS section 01 31 19.05 20, Post Award Meetings and discuss monthly at a QC meeting.

1.4.2 Commissioning Authority

The Commissioning Authority shall be a member of the QC organization, shall coordinate actions with the QC Manager, shall not be subordinate to the Project Superintendent or the Project Manager, and shall report findings directly to the Government.

The Commissioning Authority shall meet the requirements of LEED-NC with the following additional qualifications:

a. A minimum of 5 years experience as a design Architect or Engineer on similar size and type designs or design-build contracts. Provide education, experience, and management capabilities on similar size and type contracts.

b. Be certified by a recognized Building Commissioning Organization. Acceptable minimum certifications are “Certified Cx Agent” from the Associated Air Balance Council (AABC); “Certified Building Cx Professional” from the Association of Energy Engineers (AEE); “Certified Cx Professional (CxP)” from the Building Commissioning Association (BCA); or “Commissioning Process Authority Professional” or Commissioning Process Manager” from the University of Wisconsin College of Engineering.

Commissioning Authority responsibilities:

a. Lead the Design Quality Control actions and be responsible for the design integrity, professional design standards, and all design services required.

b. Maybe a member of the Designer of Record’s (DOR) firm if independent of the project’s design and construction management.

c. Be responsible for development of the design portion of the QC Plan, the Commissioning Plan, incorporation and maintenance of the approved Design Schedule, and the preparation of DQC Reports, Summary Commissioning Report, and minutes of all design meetings.

d. Participate in the Post Award Kick-Off, all design planning meetings, design presentations, partnering, and QC meetings.

e. Implement the DQC plan and Commissioning Plan and shall remain on staff involved with the project until completion of the project.

f. Be cognizant of and assure that all design documents on the project have been developed in accordance with the Contract, and have been properly coordinated.

g. Develop the submittal register. Coordinate with each DOR to determine what items need to be submitted, and who needs to approve.

h. Coordinate all training issues and validate that the testing and training requirements of this contract are accomplished.

i. Provide QC certification for designcompliance.

j. Certify and sign statement on each invoice that all work to be paid to the DOR under the invoice has been completed in accordance with the contract requirements.

k. Prepare weekly DQC Reports that documents the work the design team accomplished that week.

1.4.3 QC Specialists

QC Specialists shall assist and report to the QC Manager and may perform production related duties but must be allowed sufficient time to perform their assigned quality control duties. QC Specialists are required to attend the Coordination and Mutual Understanding Meeting, QC meetings and be physically present at the construction site to perform the three phases of control and prepare documentation for each definable feature of work in their area of responsibility at the frequency specified below.

1.4.3.1 Fire Protection QC Specialist

The Fire Protection QC Specialist shall be a U.S. Registered Fire Protection Engineer (FPE) and shall be an integral part of the Prime Contractor's Quality Control Organization. This FPE shall have no business relationships (owner, partner, operating officer, distributor, salesman, or technical representative) with any fire protection equipment device manufacturers, suppliers or installers for any such equipment provided as part of this project. The Fire Protection Designer of Record may serve as the lead Fire Protection QC Specialist, provided the following qualifications are met.

a. Qualifications/Experience: The FPE shall have obtained their professional registration by successfully completing the Fire Protection Engineering discipline examination. This FPE shall have a minimum of 5 years full time and exclusive experience in every aspect of facility design and construction as it relates to fire protection, which includes, but is not limited to, building code analysis, life safety code analysis, design of automatic detection and suppression systems, passive fire protection design, water supply analysis, and a multi-discipline coordination reviews, and construction surveillance.

b. Area of Responsibility: The FPE is responsible for assuring the proper construction and installation of life safety and fire protection features across all disciplines and trades. The FPE shall be responsible for assuring that life safety and fire protection features are provided in accordance with the design documents, approved construction submittals, and manufacturer's requirements. Examples include, but are not limited to, water distribution systems including fire pumps and fire hydrants, fire resistive assemblies such as spray-applied fire proofing of structural components and fire rated walls/partitions, fire alarm and detection systems, fire suppression and standpipe systems, emergency and exit lighting fixtures, etc.

c. Construction Surveillance: The FPE shall visit the construction site as necessary to ensure life safety and fire protection systems are being constructed, applied, and installed in accordance with the approved design documents, approved construction submittals, and manufacturer's requirements. Frequency and duration of the field visits are dependent upon particular system components, system complexity, and phase of construction. At a minimum, field visits shall occur just prior to installation of suspended ceiling systems to inspect the integrity of passive fire protection features and fire suppression system piping, and required performance verification testing of all life safety and fire protection systems identified below and in Part 4.

(1) Preliminary Inspections and Final Acceptance Testing: FPE shall personally witness all preliminary inspections of fire alarm/detection and suppression systems. Once preliminary inspections have been successfully completed, the FPE shall submit a signed certificate to the QC Manager that systems are ready for final inspection and testing. The Naval Facilities Engineering Command Fire Protection Engineer will witness formal tests and approve all systems before they are accepted. The QC Manager shall submit the request for formal inspection at least 15 days prior to the date the inspection is to take place. The QC manager shall provide 10 days advance notice to the Contracting Officer and the activity Fire Inspection Office of scheduled final inspections.

(2) Final Life Safety/Fire Protection Certification Documentation: The FPE shall provide certification that all life safety and fire protection systems have been inspected and, in the FPE's professional judgment, have been installed in accordance with the contract documents, approved submittals, and manufacturer's requirements. This certification shall summarize all life safety and fire protection features, and shall bear the professional seal of the fire protection engineer.

1.4.3.2 Mechanical QC Specialist

Qualification/Experience in Area of Responsibility	Area of Responsibility	Frequency
Mechanical Inspector, International Conference of Building Officials (ICBO) Certified/ 5 years minimum	Installation and Testing of Boilers	Minimum 3 times a week during installation and full-time during testing
Elevator Inspector, International Conference of Building Officials (ICBO) Certified/ 5 years minimum	Testing of Elevators	Minimum 3 times a week during installation and full-time during testing
Mechanical Testing QC Specialist/Registered Mechanical Engineer, (PE)	Testing of Mechanical Systems	Full-time during testing

1.4.3.3 Soils Testing/Pile Installation and Testing QC Specialists

Provide IBC Special Inspections Certification provided by the following specialist(s):

Qualification/Experience in Area of Responsibility	Area of Responsibility	Frequency
Under Supervision of P.E.	Soil Testing Pile Installation And Testing	See IBC Chapter 17

1.5 THREE PHASES OF CONTROL

The Three Phases of Control shall adequately cover both on-site and off-site work and shall include the following for each DFOW.

1.5.1 Preparatory Phase

Notify the Contracting Officer at least two work days in advance of each preparatory phase meeting. The meeting shall be conducted by the QC Manager and attended by the Project Superintendent, QC Specialists, and the foreman responsible for the DFOW. The Commissioning Authority shall also attend if required by structural tests and special inspections, as outlined in Chapter 17 of the IBC and the DQC Plan. When the DFOW will be accomplished by a subcontractor, that subcontractor's foreman shall attend the preparatory phase meeting. Document the results of the preparatory phase actions in the daily Contractor Quality Control Report and in the Preparatory Phase Checklist. Perform the following prior to beginning work on each DFOW:

a. Review each paragraph of the applicable specification sections;

b. Review the Contract drawings;

c. Verify that appropriate shop drawings and submittals for materials and equipment have been submitted and approved. Verify receipt of approved factory test results, when required;

d. Review the testing plan and ensure that provisions have been made to provide the required QC testing;

e. Examine the work area to ensure that the required preliminary work has been completed;

f. Examine the required materials, equipment and sample work to ensure that they are on hand and conform to the approved shop drawings and submitted data;

g. Discuss the specific controls used in construction methods, construction tolerances, workmanship standards, and the approach that will be used to provide quality construction by planning ahead and identifying potential problems for each DFOW; and

h. Review the APP and appropriate Activity Hazard Analysis (AHA) to ensure that applicable safety requirements are met, and that required Material Safety Data Sheets (MSDS) are submitted.

1.5.2 Initial Phase

Notify the Contracting Officer at least two work days in advance of each initial phase. When construction crews are ready to start work on a DFOW, conduct the initial phase with the Project Superintendent, QC Specialists, and the foreman responsible for that DFOW. The Commissioning Authority shall also attend if required by structural tests and special inspections, as outlined in Chapter 17 of the IBC and the DQC Plan. Observe the initial segment of the DFOW to ensure that the work complies with Contract requirements. Document the results of the initial phase in the daily CQC Report and in Initial Phase Checklist. Repeat the initial phase for each

new crew to work on-site, or when acceptable levels of specified quality are not being met. Perform the following for each DFOW:

a. Establish the quality of workmanship required;

b. Resolve conflicts;

c. Ensure that testing is performed by the approved laboratory, and

d. Check work procedures for compliance with the APP and the appropriate AHA to ensure that applicable safety requirements are met.

e. Ensure manufacturer’s representative has performed necessary inspections, if required.

1.5.3 Follow-Up Phase

Perform the following for on-going work daily, or more frequently as necessary, until the completion of each DFOW and document in the daily CQC Report:

a. Ensure the work is in compliance with Contract requirements;

b. Maintain the quality of workmanship required;

c. Ensure that testing is performed by the approved laboratory; and

d. Ensure that rework items are being corrected.

1.5.4 Additional Preparatory and Initial Phases

Additional preparatory and initial phases shall be conducted on the same DFOW if the quality of on-going work is unacceptable, if there are changes in the applicable QC organization, if there are changes in the on-site production supervision or work crew, if work on a DFOW is resumed after substantial period of inactivity, or if other problems develop.

1.5.5 Notification of Three Phases of Control for Off-Site Work

Notify the Contracting Officer at least two weeks prior to the start of the preparatory and initial phases.

1.6 TESTING

1.6.1 Testing

Except as stated otherwise in the specification sections, perform sampling and testing required under this contract.

1.6.2 Accreditation Requirements

Construction materials testing laboratories must be accredited by a laboratory accreditation authority and will be required to submit a copy of the Certificate of Accreditation and Scope of Accreditation. The laboratory's scope of accreditation must include the appropriate ASTM standards (i.e.; E 329, C 1077, D 3666, D 3740, A 880, E 543) listed in the technical sections of the specifications. Laboratories engaged in Hazardous

Materials Testing shall meet the requirements of OSHA and EPA. The policy applies to the specific laboratory performing the actual testing, not just the "Corporate Office."

1.6.3 Laboratory Accreditation Authorities

Laboratory Accreditation Authorities include the National Voluntary Laboratory Accreditation Program (NVLAP) administered by the National Institute of Standards and Technology, the American Association of State Highway and Transportation Officials (AASHTO), International Accreditation Services, Inc. (IAS), U. S. Army Corps of Engineers Materials Testing Center (MTC), or the American Association for Laboratory Accreditation (A2LA).

1.6.4 Capability Check

The Contracting Officer retains the right to check laboratory equipment in the proposed laboratory and the laboratory technician's testing procedures, techniques, and other items pertinent to testing, for compliance with the standards set forth in this contract.

1.6.5 Test Results

Cite applicable Contract requirements, tests or analytical procedures used. Provide actual results and include a statement that the item tested or analyzed conforms or fails to conform to specified requirements. If the item fails to conform, notify the Contracting Officer (KO) immediately. Conspicuously stamp the cover sheet for each report in large red letters "CONFORMS" or "DOES NOT CONFORM" to the specification requirements, whichever is applicable. Test results shall be signed by a testing laboratory representative authorized to sign certified test reports. Furnish the signed reports, certifications, and other documentation to the KO via the QC Manager.

1.7 QC CERTIFICATION

1.7.1 Contractor Quality Control Report Certification

Each CQC Report shall contain the following statement: "On behalf of the Contractor, I certify that this report is complete and correct and equipment and material used and work performed during this reporting period is in compliance with the contract drawings and specifications to the best of my knowledge except as noted in this report."

1.7.2 Invoice Certification

Furnish a certificate to the KO with each payment request, signed by the QC Manager, attesting that as-built drawings are current and attesting that the work for which payment is requested, including stored material, is in compliance with contract requirements.

1.7.3 Completion Certification

Upon completion of work under this contract, the QC Manager shall furnish a certificate to the KO attesting that "the work has been completed, inspected, tested and is in compliance with the contract."

1.8 COMPLETION INSPECTIONS

The Contractor shall perform the necessary prefinal inspections, compile punchlists, and correct deficiencies. Notify the Contracting Officer 5 calendar days prior to the date a prefinal inspection can be held. Notify the Contracting Officer at least 14 calendar days prior to the date a final acceptance inspection can be held. The Government will perform final inspection to verify that the facility is complete and ready to be occupied. All items previously identified on the prefinal punchlist will have been corrected and acceptable.

1.8.1 Punch-Out Inspection

Near the completion of all work or any increment thereof established by a completion time stated in the Contract clause "Commencement, Prosecution, and Completion of Work," or stated elsewhere in the specifications, the QC Manager shall conduct an inspection of the work and develop a punch list of items which do not conform to the approved drawings and specifications. Include in the punch list any remaining items of the "Rework Items List", which were not corrected prior to the Punch-Out inspection. The punch list shall include the estimated date by which the deficiencies will be corrected. A copy of the punch list shall be provided to the KO. The QC Manager or staff shall make follow-on inspections to ascertain that all deficiencies have been corrected. Once this is accomplished, the Contractor shall notify the Government that the facility is ready for the Government "Pre-Final Inspection".

1.8.2 Pre-Final Inspection

The Government will perform this inspection to verify that the facility is complete and ready to be occupied. A Government pre-final punch list may be developed as a result of this inspection. The QC Manager shall ensure that all items on this list are corrected prior to notifying the Government that a "Final" inspection with the customer can be scheduled. Any items noted on the "Pre-Final" inspection shall be corrected in a timely manner and shall be accomplished before the contract completion date for the work or any particular increment thereof if the project is divided into increments by separate completion dates.

1.8.3 Final Acceptance Inspection

The QC Manager, the superintendent, or other Contractor management personnel and the KO will be in attendance at this inspection. Additional Government personnel may be in attendance. The final acceptance inspection will be formally scheduled by the KO based upon results of the "Pre-Final Inspection". Notice shall be given to the KO at least 14 days prior to the final inspection. The notice shall state that all specific items previously identified to the Contractor, as being unacceptable will be complete by the date scheduled for the final acceptance inspection. Failure of the Contractor to have all contract work acceptably complete for this inspection will be cause for the KO to bill the Contractor for the Government's additional inspection cost in accordance with the contract clause "Inspection of Construction".

1.9 TRAINING

The Commissioning Authority shall provide a comprehensive project-specific Government personnel training program for the systems of the facility specified in the technical specifications of this Contract. The core of this training will be based on manufacturer's recommendations and the operation and maintenance support information (OMSI) provided as a part of this Contract. Training shall include classroom discussion as well as hands on maintenance, replacement of typical components and repair type maintenance training for parts typically replaced or repaired in the field, such as:

1. Domestic water pressure boosting system
2. Plumbing systems, including temperature actuated thermostatic water mixing valve
3. HVAC Systems, including chillers, boilers, heat pumps, air handling equipment, exhaust fans, fan coil units, hot and chilled water pumping system
4. Steam condensate pumps
5. Direct Digital Controls/Space Temperature Controls
6. Electrical systems, including transformers, diesel-electric generator sets, automatic transfer switches, primary switchgear, secondary switchgear, high-voltage switchgear, variable frequency drives, and frequency converters
7. Fire protection systems, including fire alarm systems and detection systems
8. Site mechanical utilities, including cathodic protection
9. Site electrical utilities, including substations, transformers, and pad mounted switchgear
10. Wastewater pump systems

Provide each trainee in the course a written training course outline. Submit outline for approval at least 90 calendar days prior to training session. Provide to the Contracting Officer two copies of the training video recording in VHS or DVD format. Confirm media format required with the using activity. The recording shall capture, in video and audio, all instructors training presentations including question and answer periods with the trainees.

1.10 DOCUMENTATION

Maintain current and complete records of on-site and off-site QC program operations and activities. The forms identified under the paragraph "INFORMATION FOR THE CONTRACTING OFFICER (KO)" shall be used. Reports are required for each day work is performed. Account for each calendar day throughout the life of the contract. Every space on the forms must be filled in. Use N/A if nothing can be reported in one of the spaces. The superintendent and the QC Manager must prepare and sign the Contractor Production and CQC Reports, respectively. The reporting of work shall be identified by terminology consistent with the construction schedule. In the "remarks" section in this report which will contain pertinent information including directions received, problems encountered during construction, work progress and delays, conflicts or errors in the drawings or specifications, field changes, safety hazards encountered, instructions given and corrective actions taken, delays encountered and a record of visitors to the work site. For each remark given, identify the Schedule Activity No. that is associated with the remark.

1.10.1 Quality Control Validation

Establish and maintain the following in a series of three ring binders. Binders shall be divided and tabbed as shown below. These binders shall be readily available to the Government's Quality Assurance Team during all business hours.

a. All completed Preparatory and Initial Phase Checklists, arranged by specification section.

b. All milestone inspections, arranged by Activity/Event Number.

c. A current up-to-date copy of the Testing and Plan Log with supporting field test reports, arranged by specification section.

d. Copies of all contract modifications, arranged in numerical order. Also include documentation that modified work was accomplished.

e. A current up-to-date copy of the Rework Items List.

f. Maintain up-to-date copies of all punch lists issued by the QC Staff on the Contractor and Sub-Contractors and all punch lists issued by the Government.

1.10.2 As-Built Drawings

The QC Manager is required to review the as-built drawings, are kept current on a daily basis and marked to show deviations, which have been made from the Contract drawings. Ensure each deviation has been identified with the appropriate modifying documentation, e.g. PC number, modification number, RFI number, etc. The QC Manager shall initial each deviation or revision. Upon completion of work, the QC Manager shall submit a certificate attesting to the accuracy of the as-built drawings prior to submission to the KO.

1.11 NOTIFICATION OF NON-COMPLIANCE

The KO will notify the Contractor of any detected non-compliance with the foregoing requirements. The Contractor shall take immediate corrective action after receipt of such notice. Such notice, when delivered to the Contractor at the work site, shall be deemed sufficient for the purpose of notification. If the Contractor fails or refuses to comply promptly, the KO may issue an order stopping all or part of the work until satisfactory corrective action has been taken. The Contractor shall make no part of the time lost due to such stop orders the subject of claim for extension of time, for excess costs, or damages.

-- End of Section --

SECTION 01 50 00.05 20

TEMPORARY FACILITIES AND CONTROLS FOR DESIGN-BUILD
11/07

PART 1 GENERAL

1.1 REFERENCES

The publications listed below form a part of this specification to the extent referenced. The publications are referred to within the text by the basic designation only.

AMERICAN WATER WORKS ASSOCIATION(AWWA)

AWWA C511	(1997) Reduced-Pressure Principle Backflow Prevention Assembly

FOUNDATION FOR CROSS-CONNECTION CONTROL AND HYDRAULIC RESEARCH (FCCCHR)

FCCCHR List	(continuously updated) List of Approved Backflow Prevention Assemblies
FCCCHR Manual	(9th Edition) Manual of Cross-Connection Control

NATIONAL FIRE PROTECTION ASSOCIATION (NFPA)

NFPA 241	(2000) Safeguarding Construction, Alteration, and Demolition Operations
NFPA 70	(2005) National Electrical Code

U.S. FEDERAL HIGHWAY ADMINISTRATION (FHWA)

FHWA SA-89-006	(1988) Manual on Uniform Traffic Control Devices for Streets and Highways

U.S. NATIONAL ARCHIVES AND RECORDS ADMINISTRATION (NARA)

40 CFR 247	Comprehensive Procurement Guideline for Products Containing Recovered Materials

1.2 SUBMITTALS

The use of a "G" following a submittal indicates that a Government approval action is required. Submit the following in accordance with Section 01 33 10.05 20 DESIGN SUBMITTAL PROCEDURES and Section 01 33 00.05 20 CONSTRUCTION SUBMITTAL PROCEDURES.

SD-01 Preconstruction Submittals

Traffic control plan;G

Construction site plan;G

SD-03 Product Data

Backflow preventers

SD-06 Test Reports

Backflow Preventer Tests;G

SD-07 Certificates

Backflow Tester Certification; G

Backflow Preventers Certificate of Full Approval

1.3 EPA LISTED ITEMS USED IN CONDUCT OF THE WORK BUT NOT INCORPORATED IN THE WORK

There are many products listed in 40 CFR 247 which have been designated or proposed by EPA to include recycled or recovered materials that may be used by the Contractor in performing the work but will not be incorporated into the work. These products include office products, temporary traffic control products, and pallets. These non-construction products contain the highest practicable percentage of recycled or recovered materials and can be recycled when no longer needed.

1.4 CONSTRUCTION SITE PLAN

Prior to the start of work, submit a site plan showing the locations of temporary facilities (including layouts and details, equipment and material storage area (onsite and offsite), and access and haul routes used for this contract. Show locations of safety and construction fences, site trailers, construction entrances, trash dumpsters, temporary sanitary facilities, and worker parking areas.

1.5 BACKFLOW PREVENTERS CERTIFICATE

Certificate of Full Approval from FCCCHR List, University of Southern California, attesting that the design, size and make of each backflow preventer has satisfactorily passed the complete sequence of performance testing and evaluation for the respective level of approval. Certificate of Provisional Approval will not be acceptable.

1.5.1 Backflow Prevention Training Certificate

The Contractor shall submit a certificate recognized by the State or local authority that states the Contractor has completed at least 10 hours of training in backflow preventer installations. The certificate must be current.

1.6 TEMPORARY UTILITIES

Reasonable amounts of the following utilities will be made available to the Contractor at the prevailing rates or at no cost as designated in the task order.

1.6.1 Contractor Utilities

For electricity and potable water. The Contractor shall be responsible for verifying the prevailing rates and providing for all costs in the bid or offer. The Government retains the right to change these rates as necessary.

1.6.2 Utility Services

Unless otherwise specified in the Task Order, Utility Services will be provided through the Base Operations Support (BOS) Contractor. The Contractor shall pay all costs for coordination, interruption and other utility services. Utility interruption includes connecting, converting, and transferring the utilities (power, water, sewer, fire protection, air conditioning and ventilation system, etc) to the work. Procedure for requesting and paying for utility services will be provided by the Contracting Officer. The Contractor shall make connections, including providing backflow-preventing devices to domestic water line and fire sprinkler system; providing meters; and providing transformers; and make disconnections.

1.6.3 Dig Permits and Miscellaneous Services

Unless otherwise specified in the Task Order, Dig permits and miscellaneous services will be provided through the Base Operations Support (BOS) Contractor. The Contractor shall coordinate with the Government for dig permits and miscellaneous services provided by the BOS Contractor. Location of utilities will be marked by the BOS Contractor. The construction Contractor shall maintain the markings. Procedure for requesting dig permits and miscellaneous services will be provided by the Contracting Officer.

1.7 BACKFLOW TESTER CERTIFICATION

Prior to testing, submit to the Contracting Officer certification issued by the State or local regulatory agency attesting that the backflow tester has successfully completed a certification course sponsored by the regulatory agency. Tester shall not be affiliated with any company participating in any other phase of this Contract.

1.8 WEATHER PROTECTION

Take necessary precautions to ensure that roof openings and other critical openings in the building are monitored carefully. Take immediate actions required to seal off such openings when rain or other detrimental weather is imminent, and at the end of each workday.

1.8.1 Building and Site Storm Protection

When a warning of gale force winds is issued, take precautions to minimize danger to persons, and protect the work and nearby Government property. Precautions shall include, but are not limited to, closing openings; removing loose materials, tools and equipment from exposed locations; and removing or securing scaffolding and other temporary work. Close openings in the work when storms of lesser intensity pose a threat to the work or any nearby Government property.

1.8.2 Typhoon Condition of Readiness

Unless directed otherwise, comply with:

1.8.2.1 Responsibility

The Contractor, at no additional cost to the Government shall be responsible for the security and safety of the construction work and the site, including the Contractor's project site, when warnings of winds of gale force are issued. Gale force winds are defined as having a sustained velocity of 34-knots or better and include winds of tropical storm or typhoon intensity. Satisfactory job site clean up is the initial, basic day-to-day, minimal preparation the Contractor can make for winds of destructive force.

1.8.2.2 Preparation

When warnings of gale force winds are issued, the Contractor shall carry out, without delay, all directives concerning desired action to be taken, which may be issued to him by the Contracting Officer or his designated representative. This preparation is in accordance with the contract terms and every practicable precaution will be taken to minimize danger to persons, to prevent damage to work in place, materials, supplies, equipment, adjacent structures, and property of others; and is in public interest.

1.8.2.3 Tropical Cyclone Conditions of Readiness (COR)

CORs are set by Commander, Naval Forces Marianas, when winds of 50-knots are expected to occur locally. Sustained winds of 50 knots or greater could result from either a tropical storm or a typhoon approaching or forming over Guam.

a. **Tropical Cyclone COR Four.** A sustained wind of 50-knots or greater is possible within 72 hours. The minimum mandatory action required of the Contractor is noted below:

b. **Tropical Cyclone COR Three.** Sustained winds of 50-knots or greater is expected within 48 hours. The minimum mandatory action required of the Contractor is noted below:

c. **Tropical Cyclone COR Two.** Sustained winds of 50-knots or greater is expected within 24 hours. The minimum mandatory action required of the Contractor is noted below:

d. **Tropical Cyclone COR One.** A sustained wind of 50-knots or greater is expected within 12 hours. The minimum mandatory action required of the Contractor is noted below:

1.8.2.4 **COR Four**

During COR Four, the normal condition of readiness on Guam and in the Trust Territory of the Pacific Island requires daily job site clean up and good housekeeping practices. The Contractor shall collect and store in piles or contain all scrap lumber, waste materials, and rubbish for regular removal and disposal no less frequently than at close of each workday's work. The construction site, including storage areas, shall be maintained free of accumulations of debris at all times by the Contractor. Form lumber, which is not incorporated into forms, shall be stacked in neat piles less than 4

feet high at the close of work each day or shall be removed from the job site. Upon erection or mobilization at the job site, construction shacks or shanties shall be secured to withstand typhoon intensity winds and shall be neat and maintained in good order.

1.8.2.5 Planning

Planning for all job operations shall include the total systems response capabilities available to minimize the consequences of accident or natural disaster. These normal job sites clean up operations shall be conducted to the satisfaction of the Contracting Officer or his designated representative.

1.8.2.6 **COR Three**

When COR Three is set, the Contractor shall attain the job site condition required for Typhoon Condition Three prior to close of work that day. In addition, the Contractor shall commence all securing operations for typhoon that cannot be completed within 18 hours. If this condition is set during holiday or weekend, the Contractor shall proceed as above, i.e., the same as if it were a normal working day. If this condition is set at night, the Contractor shall establish his plan of securing operations for the next day at commence at first light of day if still in Condition Three or greater (Conditions 2 or 1).

1.8.2.7 **COR Two**

When COR Two is set, the Contractor shall cease routine activities to allow maximum securing effort if such will interfere with his normal routine. If winds of typhoon force are expected, form work and scaffolding shall be reinforced or removed if necessary and all machinery, tools, Government-furnished materials or equipment, etc., shall be secured and if necessary, removed from the job site or placed inside a typhoon shelter. If this condition is set at night or during a holiday or weekend, the above action shall be taken at the earliest opportunity and accomplished to the satisfaction of the Contracting Officer or his authorized representative.

1.8.2.8 **COR One**

When COR One is set, the job site shall be secured and all personnel shall report to shelter. The Contractor shall ensure that the job site is secured to the satisfaction of the Contracting Officer or his designated representative before he has released his work force to report to shelter.

1.8.2.9 **COR Four “All Clear”**

When COR Four “All Clear” is set after the passing of the destructive winds, the Contractor shall return to the job site to assess damages and immediately restore the job site to the Satisfaction of Officer in Charge or his designated representative. The job site restoration/clean up shall be in accordance with the contract terms and every practicable precaution shall be taken to minimize danger to people, to prevent damage to work in place, materials, supplies, equipment, adjacent structures, and property of others; and is in public interest. However, before proceeding with restoration/clean up requiring significant time and cost, a clean up plan shall be discussed with and submitted to the Contracting Officer or his designated representative for approval.

1.9 STATION OPERATION AFFECT ON CONTRACTOR OPERATIONS

1.9.1 Restricted Access Areas

The Government will monitor work in areas indicated in the task order. Notify Contracting Officer at least 14 calendar days prior to starting work in these areas.

1.9.2 Special Restrictions Regarding Access of Vehicles and Parking

1.9.2.1 Interruption of Vehicular Traffic

If during the performance of work, it becomes necessary to modify vehicular traffic patterns at any locations, notify the Contracting Officer at least 15 calendar days prior to the proposed modification date, and provide a Traffic Control Plan detailing the proposed controls to traffic movement for approval. The plan shall be in accordance with Federal and local regulations and the FHWA SA-89-006, Part VI. Make all notifications and obtain any permits required for modification to traffic movements outside Station's jurisdiction. Provide cones, signs, barricades, lights, or other traffic control devices and personnel required to control traffic. Do not use foil-backed material for temporary pavement marking because of its potential to conduct electricity during accidents involving downed power lines.

1.10 STORAGE AREAS

Contractor shall be responsible for security of his property. The Contract Clause entitled "FAR 52.236-10, Operations and Storage Areas" and the following apply:

1.10.1 Storage in Existing Buildings

The Contractor shall be working in and around existing buildings; the storage of material will be allowed where indicated. Provide 2.4 m (8 foot) high security fence with a lockable gate around the storage area. Remove at the completion of work.

1.11 TEMPORARY SANITARY FACILITIES

Provide adequate sanitary conveniences of a type approved for the use of persons employed on the work, properly secluded from public observation, and maintained in such a manner as required and approved by the Contracting Officer. Maintain these conveniences at all times without nuisance. Upon completion of the work, remove the conveniences from the premises, leaving the premises clean and free from nuisance. Dispose of sewage through connection to a municipal, district, or station sanitary sewage system. Where such systems are not available, use chemical toilets or comparably effective units, and periodically empty wastes into a municipal, district, or station sanitary sewage system, or remove waste to a commercial facility. Include provisions for pest control and elimination of odors.

1.12 TEMPORARY BUILDINGS

Temporary facilities (including trailers) shall be in like new condition and shall be maintained throughout the project. Locate these facilities where

directed and within the indicated operations area. Failure to maintain storage trailers or buildings to these standards shall result in the removal of non-complying units at the Contractor's expense. A sign not smaller than 600 by 600 mm (24 by 24 inches) shall be conspicuously placed on the trailer depicting the company name, business phone number, and emergency phone number. Trailers shall be anchored to resist high winds and must meet applicable state of local standards for anchoring mobile trailers. Storage of material/debris under such facilities is prohibited. Contractor shall be responsible for the security of the stored property.

1.12.1 Maintenance of Temporary Facilities

Paint in accordance with base standards and maintain the temporary facilities. Failure to do so will be sufficient reason to require their removal.

1.12.2 Quality Control Manager Records and Field Office

Provide on the jobsite an office with approximately 200 square feet of useful floor area for the exclusive use of the QC Manager. Provide a weathertight structure with adequate cooling, toilet facilities, lighting, ventilation, a 4 by 8 foot plan table, a standard size office desk and chair, computer station, and working communications facilities. Provide a door with a cylinder lock and windows with locking hardware. Make utility connections. Locate as directed. File quality control records in the office and make available at all times to the Government. After completion of the work, remove the entire structure from the site.

Provide a minimum of 60 SF lockable office space on the jobsite for the Government’s representative complete with desk, chair, and internet access.

PART 2 PRODUCTS

2.1 BACKFLOW PREVENTERS

Reduced pressure principle type conforming to the applicable requirements AWWA C511. Provide backflow preventers complete with 150 pound flanged cast iron, mounted gate valve and strainer, 304 stainless steel or bronze, internal parts. The particular make, model/design, and size of backflow preventers to be installed shall be included in the latest edition of the List of Approved Backflow Prevention Assemblies issued by the FCCCHR List and shall be accompanied by a Certificate of Full Approval from FCCCHR List.

2.2 PROJECT SIGN

Prior to initiating any work on site, provide one project identification sign at the location coordinated with the Contracting Officer. Construct the sign in accordance with Section 01 58 00 (Project Identification) and the project sign detail. Maintain sign throughout the life of the project. Upon completion of the project, remove the sign from the site. Provide color rendering of the project. When required on the Task Order (Part 3), reproduce the rendering on the signboard or enclose a copy of the rendering under a water-proof, transparent cover, and caulk for weather protection. Provide rendering in accordance with Section 01 33 10.05 20 DESIGN SUBMITTAL PROCEDURES.

PART 3 EXECUTION

3.1 TEMPORARY PHYSICAL CONTROLS

3.1.1 Access Controls

3.1.1.1 Temporary Barricades

Contractor shall provide for barricading around all work areas to prevent public access.

3.1.1.2 Fencing

Fencing shall be provided along the construction site at all open excavations and tunnels to control access by unauthorized people. Fencing must be installed to be able to restrain a force of at least 114.00 kg(250 pounds) against it.

In addition, prior to the start of work, enclose those areas at the construction site which are not within the construction fence with a temporary safety fence, including gates and warning signs, to protect the public from construction activities. The safety fence shall match the base standard color (or bright orange where it protects excavated areas), shall be made of high density polyethylene grid or approved equal, a minimum of 1100 mm(42 inches) high, supported and tightly secured to steel posts located on minimum 3000 mm(10 foot) centers. Remove the fence from the work site upon completion of the contract.

3.1.1.3 Signs

Place warning signs at the construction area perimeter designating the presence of construction hazards requiring unauthorized persons to keep out. Signs must be placed on all sides of the project, with at least one sign every 90 m(300 feet). All points of entry shall have signs designating the construction site as a hard hat area.

3.1.1.4 Traffic Work

All work around/involving roadways, to include roadway excavations and utility crossings, will be conducted in accordance with Manual of Traffic Control Devices. Contractors shall provide and ensure appropriate road closure and detour signs are established as necessary for motor traffic management. All road closures shall be coordinated with the Contracting Officer in advance. Self-illuminated (lighted) barricades shall be provided during hours of darkness. Brightly-colored (orange) vests are required for all personnel working in roadways. Road closures shall require a road closure plan showing the location of signage.

3.2 TEMPORARY WIRING

Provide temporary wiring in accordance with NFPA 241 and NFPA 70, Assured Equipment Grounding Conductor Program. Program shall include frequent inspection of all equipment and apparatus.

3.3 REDUCED PRESSURE BACKFLOW PREVENTERS

Provide an approved reduced pressure backflow prevention assembly at each location where the Contractor taps into the Government potable water supply.

A certified tester(s) shall perform testing of backflow preventer(s) for proper installation and operation and provide subsequent tagging. Backflow preventer tests shall be performed using test equipment, procedures, and certification forms conforming to those outlined in the latest edition of the Manual of Cross-Connection Control published by the FCCCHR Manual. Test and tag each reduced pressure backflow preventer upon initial installation (prior to continued water use) and quarterly thereafter. Tag shall contain the following information: make, model, serial number, dates of tests, results, maintenance performed, and signature of tester. Record test results on certification forms conforming to requirements cited earlier in this paragraph.

3.4 GRASS CUTTING

Cut grass (or annual weeds) within the construction and storage sites to a maximum 100 mm (4 inch) height at least once a week during the growing season unless the grass area is not visible to the public. Trim the grass around fences at time of grass cutting. Maintain grass or weeds on stockpiled earth as needed to maintain the site in a neat and orderly appearance.

-- End of Section --

SECTION 01 57 19.00 20

TEMPORARY ENVIRONMENTAL CONTROLS
01/08

PART 1 GENERAL

1.1 REFERENCES

The publications listed below form a part of this specification to the extent referenced. The publications are referred to within the text by the basic designation only.

U.S. DEPARTMENT OF DEFENSE (DOD) UNIFIED FACILITIES CRITERIA (UFC)

UFC 3-200-10N	Civil Engineering

U.S. ENVIRONMENTAL PROTECTION AGENCY (EPA)

EPA 530/F-93/004	(1993; Rev O; Updates I, II, IIA, IIB, and III) Test Methods for Evaluating Solid Waste (Vol IA, IB, IC, and II) (SW-846)
EPA 833-R-060-04	(2000) Developing Your Storm Water Pollution Prevention Plan, A Guide for Construction Sites

U.S. NATIONAL ARCHIVES AND RECORDS ADMINISTRATION (NARA)

29 CFR 1910	Occupational Safety and Health Standards
29 CFR 1910.120	Hazardous Waste Operations and Emergency Response
40 CFR 82	Protection of Stratospheric Ozone
40 CFR 112	Oil Pollution Prevention
40 CFR 122.26	Storm Water Discharges (Applicable to State NPDES Programs, see section 40 CFR 123.25)
40 CFR 241	Guidelines for Disposal of Solid Waste
40 CFR 243	Guidelines for the Storage and Collection of Residential, Commercial, and Institutional Solid Waste
40 CFR 258	Subtitle D Landfill Requirements
40 CFR 260	Hazardous Waste Management System: General
40 CFR 261	Identification and Listing of Hazardous Waste
40 CFR 262	Standards Applicable to Generators of Hazardous Waste

40 CFR 263	Standards Applicable to Transporters of Hazardous Waste
40 CFR 264	Standards for Owners and Operators of Hazardous Waste Treatment, Storage, and Disposal Facilities
40 CFR 265	Interim Status Standards for Owners and Operators of Hazardous Waste Treatment, Storage, and Disposal Facilities
40 CFR 266	Standards for the Management of Specific Hazardous Wastes and Specific Types of Hazardous Waste Management Facilities
40 CFR 268	Land Disposal Restrictions
40 CFR 270	EPA Administered Permit Programs: The Hazardous Waste Permit Program
40 CFR 271	Requirements for Authorization of State Hazardous Waste Programs
40 CFR 272	Approved State Hazardous Waste Management Programs
40 CFR 273	Standards For Universal Waste Management
40 CFR 279	Standards for the Management of Used Oil
40 CFR 300	National Oil and Hazardous Substances Pollution Contingency Plan
40 CFR 355	Emergency Planning and Notification
40 CFR 372-SUBPART D	Specific Toxic Chemical Listings
40 CFR 761	Polychlorinated Biphenyls (PCBs) Manufacturing, Processing, Distribution in Commerce, and Use Prohibitions
49 CFR 171	General Information, Regulations, and Definitions
49 CFR 172	Hazardous Materials Table, Special Provisions, Hazardous Materials Communications, Emergency Response Information, and Training Requirements
49 CFR 173	Shippers - General Requirements for Shipments and Packaging
49 CFR 178	Specifications for Packaging

1.2 DEFINITIONS

1.2.1 Sediment

Soil and other debris that have eroded and have been transported by runoff water or wind.

1.2.2 Solid Waste

Garbage, refuse, debris, sludge, or other discharged material, including solid, liquid, semisolid, or contained gaseous materials resulting from domestic, industrial, commercial, mining, or agricultural operations. Types of solid waste typically generated at construction sites may include:

a. Green waste: The vegetative matter from landscaping, land clearing and grubbing, including, but not limited to, grass, bushes, scrubs, small trees and saplings, tree stumps and plant roots. Marketable trees, grasses and plants that are indicated to remain, be re-located, or be re-used are not included.

b. Surplus soil: Existing soil that is in excess of what is required for this work, including aggregates intended, but not used, for on-site mixing of concrete, mortars and paving. Contaminated soil meeting the definition of hazardous material or hazardous waste is not included.

c. Debris: Non-hazardous solid material generated during the construction, demolition, or renovation of a structure which exceeds 60 mm(2.5 inch) (2.5 inch) particle size that is: a manufactured object; plant or animal matter; or natural geologic material (e.g. cobbles and boulders), broken or removed concrete, masonry, and rock asphalt paving; ceramics; roofing paper and shingles. Inert materials may be reinforced with or contain ferrous wire, rods, accessories and weldments. A mixture of debris and other material such as soil or sludge is also subject to regulation as debris if the mixture is comprised primarily of debris by volume, based on visual inspection.

d. Wood: Dimension and non-dimension lumber, plywood, chipboard, hardboard. Treated and/or painted wood that meets the definition of lead contaminated or lead based contaminated paint is not included.

e. Scrap metal: Scrap and excess ferrous and non-ferrous metals such as reinforcing steel, structural shapes, pipe and wire that are recovered or collected and disposed of as scrap. Scrap metal meeting the definition of hazardous material or hazardous waste is not included.

f. Paint cans: Metal cans that are empty of paints, solvents, thinners and adhesives. If permitted by the paint can label, a thin dry film may remain in the can.

g. Recyclables: Materials, equipment and assemblies such as doors, windows, door and window frames, plumbing fixtures, glazing and mirrors that are recovered and sold as recyclable. Metal meeting the definition of lead contaminated or lead based paint contaminated is not included as recyclable if sold to a scrap metal company. Paint cans may be included as recyclable if permitted by the paint can label, a thin dry film main remain in the can and sold to a scrap metal company.

h. Hazardous Waste: By definition, to be a hazardous waste a material must first meet the definition of a solid waste. Hazardous waste and hazardous debris are special cases of solid waste. They have additional regulatory controls and must be handled separately. They are thus defined separately in this document.

Material not regulated as solid waste are: nuclear source or byproduct materials regulated under the Federal Atomic Energy Act of 1954 as amended; suspended or dissolved materials in domestic sewage effluent or irrigation return flows, or other regulated point source discharges; regulated air emissions; and fluids or wastes associated with natural gas or crude oil exploration or production.

1.2.3 Hazardous Debris

As defined in Solid Waste paragraph, debris that contains listed hazardous waste (either on the debris surface, or in its interstices, such as pore structure) per 40 CFR 261; or debris that exhibits a characteristic of hazardous waste per 40 CFR 261.

1.2.4 Chemical Wastes

This includes salts, acids, alkalizes, herbicides, pesticides, and organic chemicals.

1.2.5 Garbage

Refuse and scraps resulting from preparation, cooking, dispensing, and consumption of food.

1.2.6 Hazardous Waste

Any discarded material, liquid, solid, or gas, which meets the definition of hazardous material or is designated hazardous waste by the Environmental Protection Agency or State Hazardous Control Authority as defined in 40 CFR 260, 40 CFR 261, 40 CFR 262, 40 CFR 263, 40 CFR 264, 40 CFR 265, 40 CFR 266, 40 CFR 268, 40 CFR 270, 40 CFR 271, 40 CFR 272, 40 CFR 273, 40 CFR 279, and 40 CFR 280.

1.2.7 Hazardous Materials

Hazardous materials as defined in 49 CFR 171 and listed in 49 CFR 172.

Hazardous material is any material that:

a. Is regulated as a hazardous material per 49 CFR 173, or

b. Requires a Material Safety Data Sheet (MSDS) per 29 CFR 1910.120, or

c. During end use, treatment, handling, packaging, storage, transpiration, or disposal meets or has components that meet or have potential to meet the definition of a hazardous waste as defined by 40 CFR 261 Subparts A, B, C, or D.

Designation of a material by this definition, when separately regulated or controlled by other instructions or directives, does not eliminate the need for adherence to that hazard-specific guidance which takes precedence over

this instruction for "control" purposes. Such material include ammunition, weapons, explosive actuated devices, propellants, pyrotechnics, chemical and biological warfare materials, medical and pharmaceutical supplies, medical waste and infectious materials, bulk fuels, radioactive materials, and other materials such as asbestos, mercury, and polychlorinated biphenyls (PCBs). Nonetheless, the exposure may occur incident to manufacture, storage, use and demilitarization of these items.

1.2.8 Waste Hazardous Material (WHM)

Any waste material which because of its quantity, concentration, or physical, chemical, or infectious characteristics may pose a substantial hazard to human health or the environment and which has been so designated. Used oil not containing any hazardous waste, as defined above, falls under this definition.

1.2.9 Oily Waste

Those materials which are, or were, mixed with used oil and have become separated from that used oil. Oily wastes also means materials, including wastewaters, centrifuge solids, filter residues or sludges, bottom sediments, tank bottoms, and sorbents which have come into contact with and have been contaminated by, used oil and may be appropriately tested and discarded in a manner which is in compliance with other State and local requirements.

This definition includes materials such as oily rags, "kitty litter" sorbent clay and organic sorbent material. These materials may be land filled provided that:

a. It is not prohibited in other State regulations or local ordinances

b. The amount generated is "de minimus" (a small amount)

c. It is the result of minor leaks or spills resulting from normal process operations

d. All free-flowing oil has been removed to the practical extent possible

Large quantities of this material, generated as a result of a major spill or in lieu of proper maintenance of the processing equipment, are a solid waste. As a solid waste, a hazardous waste determination must be performed prior to disposal. As this can be an expensive process, it is recommended that this type of waste be minimized through good housekeeping practices and employee education.

1.2.10 Regulated Waste

Those solid waste that have specific additional Federal, state, or local controls for handling, storage, or disposal.

1.2.11 Class I Ozone Depleting Substance (ODS)

Class I ODS is defined in Section 602(a) of The Clean Air Act and includes the following chemicals:

chlorofluorocarbon-11 (CFC-11)
chlorofluorocarbon-12 (CFC-12)
chlorofluorocarbon-13 (CFC-13)
chlorofluorocarbon-111 (CFC-111)
chlorofluorocarbon-112 (CFC-112)
chlorofluorocarbon-113 (CFC-113)
chlorofluorocarbon-114 (CFC-114) chlorofluorocarbon-115 (CFC-115)
chlorofluorocarbon-211 (CFC-211)
chlorofluorocarbon-212 (CFC-212) methyl bromide
chlorofluorocarbon-213 (CFC-213)
chlorofluorocarbon-214 (CFC-214)
chlorofluorocarbon-215 (CFC-215)
chlorofluorocarbon-216 (CFC-216)
chlorofluorocarbon-217 (CFC-217)
chlorofluorocarbon-500 (CFC-500)
chlorofluorocarbon-502 (CFC-502)
chlorofluorocarbon-503 (CFC-503)
halon-1211
halon-1301
halon-2402
carbon tetrachloride
methyl bromide
methyl chloroform

Class II ODS is defined in Section 602(s) of The Clean Air Act and includes the following chemicals:

hydrochlorofluorocarbon-21 (HCFC-21)
hydrochlorofluorocarbon-22 (HCFC-22)
hydrochlorofluorocarbon-31 (HCFC-31)
hydrochlorofluorocarbon-121 (HCFC-121)
hydrochlorofluorocarbon-122 (HCFC-122)
hydrochlorofluorocarbon-123 (HCFC-123)
hydrochlorofluorocarbon-124 (HCFC-124)
hydrochlorofluorocarbon-131 (HCFC-131)
hydrochlorofluorocarbon-132 (HCFC-132)
hydrochlorofluorocarbon-133 (HCFC-133)
hydrochlorofluorocarbon-141 (HCFC-141)
hydrochlorofluorocarbon-142 (HCFC-142)
hydrochlorofluorocarbon-221 (HCFC-221)
hydrochlorofluorocarbon-222 (HCFC-222)
hydrochlorofluorocarbon-223 (HCFC-223)
hydrochlorofluorocarbon-224 (HCFC-224)
hydrochlorofluorocarbon-225 (HCFC-225)
hydrochlorofluorocarbon-226 (HCFC-226)
hydrochlorofluorocarbon-231 (HCFC-231)
hydrochlorofluorocarbon-232 (HCFC-232)
hydrochlorofluorocarbon-233 (HCFC-233)
hydrochlorofluorocarbon-234 (HCFC-234)
hydrochlorofluorocarbon-235 (HCFC-235)
hydrochlorofluorocarbon-241 (HCFC-241)
hydrochlorofluorocarbon-242 (HCFC-242)
hydrochlorofluorocarbon-243 (HCFC-243)
hydrochlorofluorocarbon-244 (HCFC-244)
hydrochlorofluorocarbon-251 (HCFC-251)
hydrochlorofluorocarbon-252 (HCFC-252)
hydrochlorofluorocarbon-253 (HCFC-253)

hydrochlorofluorocarbon-261 (HCFC-261)
hydrochlorofluorocarbon-262 (HCFC-262)
hydrochlorofluorocarbon-271 (HCFC-271)

1.2.11.1 Universal Waste

The universal waste regulations streamline collection requirements for certain hazardous wastes in the following categories: batteries, pesticides, mercury-containing equipment (e.g., thermostats) and lamps (e.g., fluorescent bulbs). The rule is designed to reduce hazardous waste in the municipal solid waste (MSW) stream by making it easier for universal waste handlers to collect these items and send them for recycling or proper disposal. These regulations can be found at 40 CFR 273.

1.3 SUBMITTALS

Government approval is required for submittals with a "G" designation; submittals not having a "G" designation are for Contractor Quality Control approval. When used, a designation following the "G" designation identifies the office that will review the submittal for the Government. The following shall be submitted in accordance with Section 01 33 00 *Submittal Procedures*:

SD-01 Preconstruction Submittals

Preconstruction Survey; G

Environmental Management Plan; G

Solid Waste Management Plan and Permit; G

Regulatory Notifications; G

Storm Water Pollution Prevention Plan; G

Storm Water Notice of Intent (for NPDES coverage under the general permit for construction activities); G

Contractor Hazardous Material Inventory Log; G

ECATTS certificate of completion; G

SD-06 Test Reports

Laboratory Analysis

Disposal Requirements

Erosion and Sediment Control Inspection Reports

Storm Water Inspection Reports for General Permit

Contractor 40 CFR employee training records

Solid Waste Management Report; G

SD-11 Closeout Submittals

Some of the records listed below are also required as part of other submittals. For the "Records" submittal, maintain on-site a separate three-ring Environmental Records binder and submit at the completion of the project. Make separate parts to the binder corresponding to each of the applicable sub items listed below.

Storm water pollution prevention plan compliance notebook; G

Waste Determination Documentation

Disposal Documentation for Hazardous and Regulated Waste

Contractor 40 CFR Employee Training Records

Solid Waste Management Report

Contractor Hazardous Material Inventory Log; G

Hazardous Waste/Debris Management

Regulatory Notifications

1.4 ENVIRONMENTAL PROTECTION REQUIREMENTS

Provide and maintain, during the life of the contract, environmental protection as defined. Plan for and provide environmental protective measures to control pollution that develops during normal construction practice. Plan for and provide environmental protective measures required to correct conditions that develop during the construction of permanent or temporary environmental features associated with the project. Comply with Federal, State, and local regulations pertaining to the environment, including water, air, solid waste, hazardous waste and substances, oily substances, and noise pollution.

The Contractor may be required to promptly conduct tests and procedures for the purpose of assessing whether construction operations are in compliance with Applicable Environmental Laws. Analytical work shall be done by qualified laboratories; and where required by law, the laboratories shall be certified.

1.4.1 Environmental Compliance Assessment Training and Tracking System (ECATTS)

The QC Manager is responsible for environmental compliance on projects unless an Environmental Manager is named. The QC Manager (and Alternate QC Manager) or Environmental Manager shall complete ECATTS Training prior to starting respective portions of on-site work under this contract. If personnel changes occur for any of these positions after starting work, replacement personnel shall complete ECATTS training within 14 days of assignment to the project.

Submit an ECATTS certificate of completion for personnel who have completed the required "Environmental Compliance Assessment Training and Tracking System (ECATTS)" training. This training is web-based and can be accessed from any computer with Internet access using the following instructions.

Register for NAVFAC Environmental Compliance Assessment Training and Tracking System, by logging on to http://navfac.ecatts.com/. Obtain the password for registration from the Contracting Officer.

This training has been structured to allow contractor personnel to receive credit under this contract and also to carry forward credit to future contracts. Contractors shall ensure that the QC Manager (and Alternate QC Manger) or Environmental Manager review their training plans for new modules or updated training requirements prior to beginning work. Some training modules are tailored for specific State regulatory requirements; therefore, Contractors working in multiple states will be required to re-take modules tailored to the state where the contract work is being performed.

ECATTS is available for use by all contractor and subcontractor personnel associated with this project. These other personnel are encouraged (but not required) to take the training and may do so at their discretion.

1.4.2 Conformance with the Environmental Management System

The Contractor shall perform work under this contract consistent with the policy and objectives identified in the installation's Environmental Management System (EMS). The Contractor shall perform work in a manner that conforms to objectives and targets, environmental programs and operational controls identified by the EMS. The Contractor will provide monitoring and measurement information as necessary to address environmental performance relative to environmental, energy, and transportation management goals. In the event an EMS nonconformance or environmental noncompliance associated with the contracted services, tasks, or actions occurs, the Contractor shall take corrective and/or preventative actions. In addition, the Contractor shall ensure that its employees are aware of their roles and responsibilities under the EMS and how these EMS roles and responsibilities affect work performed under the contract.

The Contractor is responsible for ensuring that their employees receive applicable environmental and occupational health and safety training, and keep up to date on regulatory required specific training for the type of work to be conducted onsite. All on-site Contractor personnel, and their subcontractor personnel, performing tasks that have the potential to cause a significant environmental impact shall be competent on the basis of appropriate education, training or experience. Upon contract award, the Contracting Officer's Representative will notify the installation's EMS coordinator to arrange EMS training. Refer to Section 01 57 19.01 20, Supplemental Temporary Environmental Controls for additional site specific EMS requirements related to construction. The installation's EMS coordinator shall identify training needs associated with environmental aspects and the EMS coordinator shall identify training needs associated with environmental aspects and the EMS, and arrange training or take other action to meet these needs. The Contractor shall provide training documentation to the contracting Officer. The installations EMS coordinator shall retain associated records.

1.5 QUALITY ASSURANCE AND REPORTS

1.5.1 Preconstruction Survey

Perform a Preconstruction Survey of the project site with the Contracting Officer, and take photographs showing existing environmental conditions in and adjacent to the site. Submit a report for the record.

1.5.2 Solid Waste Disposal Permit

Submit one copy of a Guam Environmental Protection Agency (GEPA) permit or license showing such agencies' approval of the disposal plan before transporting wastes off Government property.

1.5.3 Waste Determination Documentation

The Contractor will complete a Waste Determination form (provided at the pre-construction conference) for all contractor derived wastes to be generated. The waste determination must be based upon either a constituent listing from the manufacturer used in conjunction with consideration of the process by which the waste was generated, EPA approved analytical data, or laboratory analysis (Material Safety Data Sheets (MSDS) by themselves are not adequate). All support documentation must be attached to the Waste Determination form. As a minimum, a Waste Determination form must be provided for the following wastes (this listing is not all inclusive): oil and latex based painting and caulking products, solvents, adhesives, aerosols, petroleum products, and all containers of the original materials.

1.5.4 Disposal Documentation for Hazardous and Regulated Waste

Submit a copy of the applicable EPA and GEPA permit(s), manifest(s), or license(s) for transportation, treatment, storage, and disposal of hazardous and regulated waste by permitted facilities.

1.5.5 Regulatory Notifications

The Contractor is responsible for all regulatory notification requirements in accordance with Federal, State and local regulations. In cases where the Navy must also provide public notification (such as storm water permitting), the Contractor must coordinate with the Contracting Officer. The Contractor shall submit copies of all regulatory notifications to the Contracting Officer prior to commencement of work activities. Typically, regulatory notifications must be provided for the following (this listing is not all inclusive): demolition, renovation, NPDES defined site work, remediation of controlled substances (asbestos, hazardous waste, lead paint).

1.5.6 Erosion and Sediment Control Inspection Reports

Submit "Erosion and Sediment Control Inspection Reports" (form provided at the pre-construction conference) to the Contracting Officer once every 7 calendar days and within 24 hours of a storm event that produces 0.5 inch or more of rain.

1.5.7 Solid Waste Disposal Report

Monthly the Contractor will submit a solid waste disposal report to the Contracting Officer. For each waste, the report will state the classification (using the definitions provided in this section), amount, location, and name of the business receiving the solid waste. The Contractor will include copies of the waste handling facilities' weight tickets, receipts, bills of sale, and other sales documentation.

In lieu of sales documentation, the Contractor may submit a statement indicating the disposal location for the solid waste, which is signed by an officer of the Contractor firm authorized to legally obligate or bind the firm. The sales documentation or Contractor certification will include the receiver's tax identification number and business, EPA or State registration number, along with the receiver's delivery and business addresses and telephone numbers. For each solid waste retained by the Contractor for his own use, the Contractor will submit on the solid waste disposal report the information previously described in this paragraph. Prices paid or received will not be reported to the Contracting Officer unless required by other provisions or specifications of this Contract or public law.

1.5.8 Environmental Brief

Attend an environmental brief to be included in the preconstruction meeting. Provide the following information: types, quantities, and use of hazardous materials that will be brought onto the activity; types and quantities of wastes/wastewater that may be generated during the contract. Discuss the results of the Preconstruction Survey at this time.

Prior to initiating any work on site, meet with the Contracting Officer and activity environmental staff to discuss the proposed Environmental Management Plan. Develop a mutual understanding relative to the details of environmental protection, including measures for protecting natural resources, required reports, required permits, permit requirements, and other measures to be taken.

1.5.9 Environmental Manager

Appoint in writing an Environmental Manager for the project site. The Environmental Manager will be directly responsible for coordinating contractor compliance with Federal, State, local, and station requirements.

The Environmental Manager will ensure compliance with Hazardous Waste Program requirements (including hazardous waste handling, storage, manifesting, and disposal); implement the Environmental Management Plan; ensure that all environmental permits are obtained, maintained, and closed out; ensure compliance with Storm Water Program Management requirements; ensure compliance with Hazardous Materials (storage, handling, and reporting) requirements; and coordinate any remediation of regulated substances (lead, asbestos, PCB transformers).

This can be a collateral position; however the person in this position must be trained to adequately accomplish the following duties: ensure waste segregation and storage compatibility requirements are met; inspect and manage Satellite Accumulation areas; ensure only authorized personnel add wastes to containers; ensure all Contractor personnel are trained in 40 CFR requirements in accordance with their position requirements; coordinate removal of waste containers; and maintain the Environmental Records binder and required documentation, including environmental permits compliance and close-out.

1.5.10 Contractor 40 CFR Employee Training Records

Prepare and maintain employee training records throughout the term of the contract meeting applicable 40 CFR requirements. The Contractor will ensure every employee completes a program of classroom instruction or on-the-job

training that teaches them to perform their duties in a way that ensures compliance with Federal, State and local regulatory requirements for RCRA Large Quantity Generator. The Contractor will provide a Position Description for each employee, by subcontractor, based on the Davis-Bacon Wage Rate designation or other equivalent method, evaluating the employee's association with hazardous and regulated wastes. This Position Description will include training requirements as defined in 40 CFR 265 for a Large Quantity Generator facility. Submit these training records to the Contracting Officer at the conclusion of the project, unless otherwise directed.

1.6 LICENSES AND PERMITS

Obtain licenses and permits pursuant to the "Permits and Responsibilities" FAR Clause. For permits obtained by the Contracting Officer, whether or not required by the permit, the Contractor is responsible to perform quality control inspections of the work in progress, and to submit notifications and certifications to the applicable regulatory agency, via the Contracting Officer, that the work conforms to the contract and permit requirements. The inspections and certifications will be provided through the services of a Professional Engineer, registered in the State where the work is being performed. As a part of the quality control plan, which is required to be submitted for approval by the quality control section, provide a sub item containing the name, P.E. registration number, address, and telephone number of the professional engineer(s) who will be performing the inspections and certifications for each permit listed above.

1.7 CONTRACTOR LIABILITIES FOR ENVIRONMENTAL PROTECTION

The Contractor is advised that this project and the station are subject to Federal, Territory, and local regulatory agency inspections to review compliance with environmental laws and regulations. The Contractor will fully cooperate with any representative from any Federal, State or local regulatory agency who may visit the job site and will provide immediate notification to the Contracting Officer, who will accompany them on any subsequent site inspections. The Contractor will complete, maintain, and make available to the Contracting Officer, station, or regulatory agency personnel all documentation relating to environmental compliance under applicable Federal, State and local laws and regulations. The Contractor will immediately notify the Contracting Officer if a Notice of Violation (NOV) is issued to the Contractor.

The Contractor will be responsible for all damages to persons or property resulting from Contractor fault or negligence as well as for the payment of any civil fines or penalties, which may be assessed by any Federal, Territory or local regulatory agency as a result of the Contractor's or any subcontractor's violation of any applicable Federal, Territory or local environmental law or regulation. Should a Notice of Violation (NOV), Notice of Noncompliance (NON), Notice of Deficiency (NOD), or similar regulatory agency notice be issued to the Government as facility owner/operator on account of the actions or inactions of the Contractor or one of its subcontractors in the performance of work under this contract, the Contractor will fully cooperate with the Government in defending against regulatory assessment of any civil fines or penalties arising out of such actions or inactions.

PART 2 PRODUCTS

Not used.

PART 3 EXECUTION

3.1 ENVIRONMENTAL MANAGEMENT PLAN

Prior to initiating any work on site, the Contractor will meet with the Contracting Officer to discuss the proposed Environmental Management Plan and develop a mutual understanding relative to the details of environmental protection, including measures for protecting natural resources, required reports, and other measures to be taken. The Contractor’s Environmental Management Plan shall incorporate construction related objectives and targets from the installation’s Environmental Management System. The Environmental Management Plan will be submitted in the following format and shall include the elements specified below.

a. Description of the Environmental Management Plan

(1) General overview and purpose

(a) A brief description of each specific plan required by environmental permit or elsewhere in this contract. The Permit Record of decision (PROD) form found in UFC 3-200-10N may be used to help accomplish this task.

(b) The duties and level of authority assigned to the person(s) on the job site that oversee environmental compliance.

(c) A copy of any standard or project specific operating procedures that will be used to effectively manage and protect the environment on the project site.

(d) Communication and training procedures that will be used to convey environmental management requirements to contractor employees and subcontractors.

(e) Emergency contact information contact information (office phone number, cell phone number, and e-mail address).

(2) General site information

(3) A letter signed by an officer of the firm appointing the Environmental Manager and stating that he/she is responsible for managing and implementing the Environmental Program as described in this contract. Include in this letter the Environmental Manager's authority to direct the removal and replacement of non-conforming work.

b. Management of Natural Resources

(1) Land resources
(2) Tree protection
(3) Replacement of damaged landscape features

(4) Temporary construction
(5) Stream crossings
(6) Fish and wildlife resources
(7) Wetland areas

c. Protection of Historical and Archaeological Resources

(1) Objectives

(2) Methods

d. Storm Water Management and Control

(1) Ground cover

(2) Erodible soils

(3) Temporary measures

(a) Mechanical retardation and control of runoff

(b) Vegetation and mulch

(4) Effective selection, implementation and maintenance of Best Management Practices (BMPs).

e. Protection of the Environment from Waste Derived from Contractor Operations

(1) Control and disposal of solid and sanitary waste. If Section 01 74 19.05 20 is included in the contract, submit the plan required by that section as part of the Environmental Management Plan.

(2) Control and disposal of hazardous waste (Hazardous Waste Management Section)

This item will consist of the management procedures for all hazardous waste to be generated. The elements of those procedures will coincide with the Activity Hazardous Waste Management Plan. A copy of the Activity Hazardous Waste Management Plan will be provided by the Contracting Officer. As a minimum, include the following:

(a) Procedures to be employed to ensure a written waste determination is made for appropriate wastes which are to be generated;

(b) Sampling/analysis plan;

(c) Methods of hazardous waste accumulation/storage (i.e., in tanks and/or containers);

(d) Management procedures for storage, labeling, transportation, and disposal of waste (treatment of waste is not allowed unless specifically noted);

(e) Management procedures and regulatory documentation ensuring disposal of hazardous waste complies with Land Disposal Restrictions (40 CFR 268);

(f) Management procedures for recyclable hazardous materials such as lead-acid batteries, used oil, and the like;

(g) Used oil management procedures in accordance with 40 CFR 279;

(h) Pollution prevention\hazardous waste minimization procedures;

(i) Plans for the disposal of hazardous waste by permitted facilities;

(j) Procedures to be employed to ensure all required employee training records are maintained.

f. Prevention of Releases to the Environment

(1) Procedures to prevent releases to the environment

(2) Notifications in the event of a release to the environment

g. Regulatory Notification and Permits

(1) List what notifications and permit applications must be made. Demonstrate that those permits have been obtained by including copies of all applicable, environmental permits. Be aware that some permits required under the Environmental Management Plan require up to 30 days advance regulator notice before site work may begin.

3.1.1 Environmental Management Plan Review

Within thirty days after the Contract award date, submit the proposed Environmental Management Plan for further discussion, review, and approval. Commencement of work will not begin until the environmental management plan has been approved.

3.1.2 Licenses and Permits

Obtain licenses and permits pursuant to the "Permits and Responsibilities" FAR Clause 52.236-7.

No permits will be obtained by the Contracting Officer.

Where required by the State regulatory authority, the inspections and certifications will be provided through the services of a Professional Engineer (PE), registered in Guam where the work is being performed. As a part of the quality control plan, which is required to be submitted for approval by the quality control section, provide a sub item containing the name, appropriate professional registration or license number, address, and telephone number of the professionals or other qualified persons who will be performing the inspections and certifications for each permit.

3.2 PROTECTION OF NATURAL RESOURCES

Preserve the natural resources within the project boundaries and outside the limits of permanent work. Restore to an equivalent or improved condition upon completion of work. Confine construction activities to within the limits of the work indicated or specified. If the work is near streams, lakes, or other waterways, conform to the national permitting requirements of the Clean Water Act.

Do not disturb fish and wildlife. Do not alter water flows or otherwise significantly disturb the native habitat adjacent to the project and critical to the survival of fish and wildlife, except as indicated or specified.

Except in areas to be cleared, do not remove, cut, deface, injure, or destroy trees or shrubs without the Contracting Officer's permission. Do not fasten or attach ropes, cables, or guys to existing nearby trees for anchorages unless authorized by the Contracting Officer. Where such use of attached ropes, cables, or guys is authorized, the Contractor will be responsible for any resultant damage.

Protect existing trees which are to remain and which may be injured, bruised, defaced, or otherwise damaged by construction operations. Remove displaced rocks from uncleared areas. By approved excavation, remove trees with 30 percent or more of their root systems destroyed. Remove trees and other landscape features scarred or damaged by equipment operations, and replace with equivalent, undamaged trees and landscape features. Obtain Contracting Officer's approval before replacement.

The Contracting Officer's approval is required before any equipment will be permitted to ford live streams. In areas where frequent crossings are required, install temporary culverts or bridges. Obtain Contracting Officer's approval prior to installation. Remove temporary culverts or bridges upon completion of work, and repair the area to its original condition unless otherwise required by the Contracting Officer.

3.2.1 Erosion and Sediment Control Measures

3.2.1.1 Burnoff

Burnoff of the ground cover is not permitted.

3.2.1.2 Protection of Erodible Soils

Immediately finish the earthwork brought to a final grade, as indicated or specified. Immediately protect the side slopes and back slopes upon completion of rough grading. Plan and conduct earthwork to minimize the duration of exposure of unprotected soils.

3.2.1.3 Temporary Protection of Erodible Soils

Use the following methods to prevent erosion and control sedimentation:

a. Mechanical Retardation and Control of Runoff

(1) Mechanically retard and control the rate of runoff from the construction site. This includes construction of diversion

ditches, benches, berms, and use of silt fences and straw bales to retard and divert runoff to protected drainage courses.

b. Sediment Basins

(1) Trap sediment in permanent sediment basins. Select a basin size to accommodate the runoff of a local 1-year storm. Pump dry and remove the accumulated sediment, after each storm. Use a paved weir or vertical overflow pipe for overflow. Remove collected sediment from the site. Institute effluent quality monitoring programs.

(2) Install, inspect, and maintain best management practices (BMPs) as required by the general permit. Prepare BMP Inspection Reports as required by the general permit. If required by the permit, include those inspection reports.

c. Vegetation and Mulch

(1) Provide temporary protection on sides and back slopes as soon as rough grading is completed or sufficient soil is exposed to require erosion protection. Protect slopes by accelerated growth of permanent vegetation, temporary vegetation, mulching, or netting. Stabilize slopes by hydroseeding, anchoring mulch in place, covering with anchored netting, sodding, or such combination of these and other methods necessary for effective erosion control.

(2) Seeding: Provide new seeding where ground is disturbed. Include topsoil or nutriment during the seeding operation necessary to establish or reestablish a suitable stand of grass.

3.2.2 Erosion and Sediment Control Inspection Reports

Submit "Erosion and Sediment Control Inspection Reports" (E&S) (form provided at the pre-construction conference) and Storm Water Inspection Reports for General Permit to the Contracting Officer once every 7 calendar days and within 24 hours of a storm event that produces 12 mm(0.5 inch) or more of rain.

Note erosion control inspection reports may be compiled as part of a stormwater pollution prevention plan inspection reports if applicable.

3.2.2.1 Storm Water Notice of Intent for Construction Activities and Storm Water Pollution Prevention Plan

The Contractor shall submit a Storm Water Notice of Intent (for NPDES coverage under the general permit for construction activities) and a Storm Water Pollution Prevention Plan (SWPPP) for the project to the Contracting Officer prior and gain approval prior to the commencement of work. The SWPPP will meet the requirements of the EPA or State general permit for storm water discharges from construction sites. Submit the SWPPP along with any required Notice of Intents, Notice of Termination, and appropriate permit fees, via the Contracting Officer, to the appropriate Federal or State agency for approval, a minimum of 30 calendar days prior to the start of any land disturbing activities. The Contractor shall maintain an approved copy of the SWPPP at the construction on-site office, and

continually update as regulations require, reflecting current site conditions. Additional requirements may be found in UFGS section 01 57 19.01 20, Supplemental Temporary Environmental Controls.

Coverage under this permit requires the contractor prepare a Storm Water Pollution Prevention Plan (SWPPP), prepare and submit a Registration Statement as a co-permittee with the Construction Officer, and provide the permit fee to the responsible state agency before any land disturbing activities begin. The contractor shall file for permit coverage on behalf Construction Officer and himself and file a Notice of Termination once construction is complete and the site is stabilized with a final sustainable cover.

Under the terms and conditions of the permit, the Contractor may be required to install, inspect, maintain best management practices (BMPs), and submit stormwater BMP inspection reports and stormwater pollution prevention plan inspection reports. The Contractor shall ensure construction operations and management are constantly in compliance with the terms and conditions of the general permit for storm water discharges from construction activities.

(1) The SWPPP shall:

a. Identify potential sources of pollution which may be reasonably expected to affect the quality of storm water discharge from the site.

b. Describe and ensure implementation of practices which will be used to reduce the pollutants in storm water discharge from the site.

c. Ensure compliance with terms of the EPA or State general permit for storm water discharge.

d. Select applicable best management practices from EPA 833-R-060-04.

e. Include a completed copy of the Registration Statement, BMP Inspection Report Template and Notice of Termination except for the effective date.

f. Storm Water Pollution Prevention Measures and Notice of Intent 40 CFR 122.26, EPA 833-R-060-04. Provide a "Storm Water Pollution Prevention Plan" (SWPPP) for the project. The SWPPP will meet the requirements of the EPA or State general permit for storm water discharges from construction sites. Submit the SWPPP along with any required Notice of Intents, Notice of Termination, and appropriate permit fees, via the Contracting Officer, to the appropriate Federal or State agency for approval, a minimum of 14 calendar days prior to the start of construction. A copy of the approved SWPPP will be kept at the construction on-site office, and continually updated as regulations require reflecting current site conditions.

3.2.2.2 Storm Water Pollution Prevention Plan Compliance Notebook

The contractor shall create and maintain a three binder of documents that demonstrate compliance with the Stormwater Construction Activity permit.

The binder shall include a copy of the permit Registration Statement, proof of permit fee payment, SWPPP and SWPPP update amendments, inspection reports, copies of correspondence with the Guam Environmental Protection Agency (Guam EPA) and a copy of the permit Notice of Termination. At the completion of the project the folder shall become the property of the Government. The compliance notebook shall be provided to Contracting Officer. An advance copy of the Registration Statement shall be provided to the Contracting Officer immediately after the form is presented to the permitting agency.

3.2.3 Stormwater Drainage and Construction Dewatering

There will be no discharge of excavation ground water to the sanitary sewer, storm drains, or to the river without prior specific authorization of the Environmental Division in writing. Discharge of hazardous substances will not be permitted under any circumstances.

Construction site runoff will be prevented from entering any storm drain or the river directly by the use of straw bales or other method suitable to the Environmental Division. Contractor will provide erosion protection of the surrounding soils.

Construction Dewatering shall not be discharged to the sanitary sewer. If the construction dewatering is noted or suspected of being contaminated, it may only be released to the storm drain system if the discharge is specifically permitted. Authorization for any contaminated groundwater release shall be obtained in advance from the base Environmental Officer. Discharge of hazardous substances will not be permitted under any circumstances.

3.3 HISTORICAL AND ARCHAEOLOGICAL RESOURCES

Carefully protect in-place and report immediately to the Contracting Officer historical and archaeological items or human skeletal remains discovered in the course of work. Upon discovery, notify the Contracting Officer. Stop work in the immediate area of the discovery until directed by the Contracting Officer to resume work. The Government retains ownership and control over historical and archaeological resources.

3.4 SOLID WASTE MANAGEMENT PLAN AND PERMIT

Provide to the contracting officer written notification of the quantity of solid waste/debris that is anticipated to be generated by construction. Include in the plan the locations where various types of waste will be disposed or recycled. Include letters of acceptance or as applicable, submit one copy of a State and local solid waste management permit or license showing such agency's approval of the disposal plan before transporting wastes off Government property.

3.4.1 Solid Waste Management Report

Monthly, submit a solid waste disposal report to the Contracting Officer. For each waste, the report will state the classification (using the definitions provided in this section), amount, location, and name of the business receiving the solid waste.

The Contractor shall include copies of the waste handling facilities' weight tickets, receipts, bills of sale, and other sales documentation. In lieu of sales documentation, the Contractor may submit a statement indicating the disposal location for the solid waste which is signed by an officer of the Contractor firm authorized to legally obligate or bind the firm. The sales documentation or Contractor certification will include the receiver's tax identification number and business, EPA or State registration number, along with the receiver's delivery and business addresses and telephone numbers.

For each solid waste retained by the Contractor for his own use, the Contractor will submit on the solid waste disposal report the information previously described in this paragraph. Prices paid or received will not be reported to the Contracting Officer unless required by other provisions or specifications of this Contract or public law.

3.4.2 Control and Management of Solid Wastes

Pick up solid wastes, and place in covered containers which are regularly emptied. Do not prepare or cook food on the project site. Prevent contamination of the site or other areas when handling and disposing of wastes. At project completion, leave the areas clean. Recycling is encouraged and can be coordinated with the Contracting Officer and the activity recycling coordinator. Remove all solid waste (including non-hazardous debris) from Government property and dispose off-site at an approved landfill. Solid waste disposal off-site must comply with most stringent local, State, and Federal requirements including 40 CFR 241, 40 CFR 243, and 40 CFR 258.

Manage spent hazardous material used in construction, including but not limited to, aerosol cans, waste paint, cleaning solvents, contaminated brushes, and used rags, as per environmental law.

3.4.2.1 Disposal of debris

Disposal of rubbish, debris, chemical waste, and metals at the Ordot landfill is prohibited. All rubbish, debris, chemical waste, and asbestos, including any material excavated that could be considered fill material, shall be disposed of at Government Facilities. Dispose of rubbish, debris, chemical waste, and asbestos in accordance with the requirements specified herein.

3.4.2.2 Government Dumps

Government dumps within the station and NAVFACMAR Landfill is available for disposal of rubbish, debris, and asbestos materials, except for metals, rubber products, chemicals, and hazardous waste. For dumping rubbish and debris into prepared hole, Contractor will be charged the current rate of $2.10 per cubic yard. This rate is subject to change and is provided for informational purposes. Aside from the dumping charges mentioned, the Contractor will be charged for excavation and backfilling of holes to be performed by Government personnel.

3.4.2.3 Asbestos Containing Materials

Environmental Service Department (671-339-3711) approval is required. The Contractor will be charged the current flat rate of $153.00 per cubic yard. This rate includes all work associated with landfill excavation,

dumping, backfilling, and disposal fees. The rate is subject to change and is provided for informational purposes. Prior to dumping of waste, Contractor shall establish a funding account with NAVFACMAR Comptroller (671-333-8299).

3.4.2.4 NAVFACMAR Landfill

Hours of operation are Monday through Friday, 7:30 a.m. to 4:30 p.m. Coordinate with the Contracting Officer and Landfill Supervisor (671-333-6189) or Operation Division Director (671-333-2936) 24 hours prior to delivery of the first load. Additional loads thereafter do not require advance notification, except for the Contracting Officer's approval prior to first delivery. Loads will be inspected at the landfill gate, and if approved, the Landfill Supervisor will direct the Contractor's truck to the disposal site.

3.4.2.5 Metals

Metal products will not be accepted at the NAVFACMAR landfill. Contractor shall remove metals from the construction waste and dispose of the metals by recycling through DRMO, local scrap dealer, or disposal off-island. The Contractor shall identify the selected method and site of metal waste disposal in the Environmental Protection Plan.

3.4.2.6 Chemical Waste

Dispose of chemical waste in accordance with local and federal regulations.

3.4.2.7 Dumpster

Equip dumpsters with a secure cover and paint the standard base color. Keep cover closed at all times, except when being loaded with trash and debris. Locate dumpsters behind the construction fence or out of the public view. Empty site dumpsters at least once a week or as needed to keep the site free of debris and trash. If necessary, provide 208 liter (55 gallon) trash containers painted the darker base color to collect debris in the construction site area. Locate the trash containers behind the construction fence or out of the public view. Empty trash containers at least once a day. For large demolitions, large dumpsters without lids are acceptable but should not have debris higher than the sides before emptying.

3.5 WASTE DETERMINATION DOCUMENTATION

Complete a Waste Determination form (provided at the pre-construction conference) for all contractor derived wastes to be generated. Base the waste determination upon either a constituent listing from the manufacturer used in conjunction with consideration of the process by which the waste was generated, EPA approved analytical data, or laboratory analysis (Material Safety Data Sheets (MSDS) by themselves are not adequate). Attach all support documentation to the Waste Determination form. As a minimum, a Waste Determination form must be provided for the following wastes (this listing is not all inclusive): oil and latex based painting and caulking products, solvents, adhesives, aerosols, petroleum products, and all containers of the original materials.

3.6 CONTRACTOR HAZARDOUS MATERIAL INVENTORY LOG

Submit the "Contractor Hazardous Material Inventory Log"(found at: http://www.wbdg.org/ccb/NAVGRAPH/graphtoc.pdf), which provides information required by (EPCRA Sections 312 and 313) along with corresponding Material Safety Data Sheets (MSDS) to the Contracting Officer at the start and at the end of construction (30 days from final acceptance), and update no later than January 31 of each calendar year during the life of the contract. Documentation for any spills/releases, environmental reports or off-site transfers may be requested by the Contracting Officer.

3.6.1 Disposal Documentation for Hazardous and Regulated Waste

Manifest, pack, ship and dispose of hazardous or toxic waste and universal waste that is generated as a result of construction in accordance with the generating facilities generator status under the Recourse Conservation and Recovery Act. Contact the Contracting Officer for the facility RCRA identification number that is to be used on each manifest.

Submit a copy of the applicable EPA and or State permit(s), manifest(s), or license(s) for transportation, treatment, storage, and disposal of hazardous and regulated waste by permitted facilities. Hazardous or toxic waste manifest must be reviewed, signed, and approved by the Navy before the Contractor may ship waste. To obtain specific disposal instructions the Contractor must coordinate with the Activity environmental office. Refer to Section 01 57 19.01 20 for the Activity Point of Contact information.

3.7 POLLUTION PREVENTION/HAZARDOUS WASTE MINIMIZATION

Minimize the use of hazardous materials and the generation of hazardous waste. Include procedures for pollution prevention/ hazardous waste minimization in the Hazardous Waste Management Section of the Environmental Management Plan. Consult with the activity Environmental Office for suggestions and to obtain a copy of the installation's pollution prevention/hazardous waste minimization plan for reference material when preparing this part of the plan. If no written plan exists, obtain information by contacting the Contracting Officer. Describe the types of the hazardous materials expected to be used in the construction when requesting information.

3.8 WHM/HW MATERIALS PROHIBITION

No waste hazardous material or hazardous waste shall be disposed of on government property. No hazardous material shall be brought onto government property that does not directly relate to requirements for the performance of this contract. The government is not responsible for disposal of Contractor's waste material brought on the job site and not required in the performance of this contract.

The intent of this provision is to dispose of that waste identified as waste hazardous material/hazardous waste as defined herein that was generated as part of this contract and existed within the boundary of the Contract limits and not brought in from offsite by the Contractor. Incidental materials used to support the contract including, but not limited to aerosol cans, waste paint, cleaning solvents, contaminated brushes, rags, clothing, etc. are the responsibility of the Contractor.

The list is illustrative rather than inclusive. The Contractor is not authorized to discharge any materials to sanitary sewer, storm drain, or to

the river or conduct waste treatment or disposal on government property without written approval of the Contracting Officer.

3.9 HAZARDOUS MATERIAL MANAGEMENT

No hazardous material shall be brought onto government property that does not directly relate to requirements for the performance of this contract.

Include hazardous material control procedures in the Safety Plan. Address procedures and proper handling of hazardous materials, including the appropriate transportation requirements. Submit a MSDS and estimated quantities to be used for each hazardous material to the Contracting Officer prior to bringing the material on base.

Typical materials requiring MSDS and quantity reporting include, but are not limited to, oil and latex based painting and caulking products, solvents, adhesives, aerosol, and petroleum products. At the end of the project, provide the Contracting Officer with the maximum quantity of each material that was present at the site at any one time, the dates the material was present, the amount of each material that was used during the project, and how the material was used.

Ensure that hazardous materials are utilized in a manner that will minimize the amount of hazardous waste that is generated. Ensure that all containers of hazardous materials have NFPA labels or their equivalent. Keep copies of the MSDS for hazardous materials on site at all times and provide them to the Contracting Officer at the end of the project. Certify that all hazardous materials removed from the site are hazardous materials and do not meet the definition of hazardous waste per 40 CFR 261.

3.10 PETROLEUM PRODUCTS AND REFUELING

Conduct the fueling and lubricating of equipment and motor vehicles in a manner that protects against spills and evaporation. Manage all used oil generated on site in accordance with 40 CFR 279. Determine if any used oil generated while on-site exhibits a characteristic of hazardous waste. Used oil containing 1000 parts per million of solvents will be considered a hazardous waste and disposed of at Contractor's expense. Used oil mixed with a hazardous waste will also be considered a hazardous waste.

3.10.1 Oily and Hazardous Substances

Prevent oil or hazardous substances from entering the ground, drainage areas, or navigable waters. In accordance with 40 CFR 112, surround all temporary fuel oil or petroleum storage tanks with a temporary berm or containment of sufficient size and strength to contain the contents of the tanks, plus 10 percent freeboard for precipitation. The berm will be impervious to oil for 72 hours and be constructed so that any discharge will not permeate, drain, infiltrate, or otherwise escape before cleanup occurs.

3.10.2 Inadvertent Discovery of Petroleum Contaminated Soil or Hazardous Wastes

If petroleum contaminated soil or suspected hazardous waste is found during construction that was not identified in the contract documents, the contractor shall immediately notify the contracting officer. The contractor shall not disturb this material until authorized by the contracting officer.

3.11 FUEL TANKS

Petroleum products and lubricants required to sustain up to 30 days of construction activity may be kept on site. Storage and refilling practices shall comply with 40 CFR Part 112. Secondary containment shall be provided and be no less than 110 percent of the tank volume plus five inches of free-board.

If a secondary berm is used for containment then the berm shall be impervious to oil for 72 hours and be constructed so that any discharge will not permeate, drain, infiltrate, or otherwise escape before cleanup occurs. Drips pans are required and the tanks must be covered during inclement weather.

3.12 RELEASES/SPILLS OF OIL AND HAZARDOUS SUBSTANCES

Exercise due diligence to prevent, contain, and respond to spills of hazardous material, hazardous substances, hazardous waste, sewage, regulated gas, petroleum, lubrication oil, and other substances regulated by environmental law. Maintain spill cleanup equipment and materials at the work site. In the event of a spill, take prompt, effective action to stop, contain, curtail, or otherwise limit the amount, duration, and severity of the spill/release.

In the event of any releases of oil and hazardous substances, chemicals, or gases; immediately (within 15 minutes) notify the Base or Activity Fire Department, the activity's Command Duty Officer, and the Contracting Officer. If the contractor's response is inadequate, the Navy may respond. If this should occur, the contractor will be required to reimburse the government for spill response assistance and analysis.

The Contractor is responsible for verbal and written notifications as required by the federal 40 CFR 355, State, local regulations and Navy Instructions. Spill response will be in accordance with 40 CFR 300 and applicable State and local regulations. Contain and clean up these spills without cost to the Government. If Government assistance is requested or required, the Contractor will reimburse the Government for such assistance. Provide copies of the written notification and documentation that a verbal notification was made within 20 days.

Maintain spill cleanup equipment and materials at the work site. Clean up all hazardous and non-hazardous (WHM) waste spills. The Contractor shall reimburse the government for all material, equipment, and clothing generated during any spill cleanup. The Contractor shall reimburse the government for all costs incurred including sample analysis materials, equipment, and labor if the government must initiate its own spill cleanup procedures, for Contractor responsible spills, when:

a. The Contractor has not begun spill cleanup procedure within one hour of spill discovery/occurrence, or

b. If, in the government's judgment, the Contractor's spill cleanup is not adequately abating life threatening situation and/or is a threat to any body of water or environmentally sensitive areas.

3.13 CONTROL AND MANAGEMENT OF HAZARDOUS WASTES

3.13.1 Facility Hazardous Waste Generator Status

Naval Base Guam and other Federal Activities on Guam are designated as a Large Quantity Generator. All work conducted within the boundaries of this activity must meet the regulatory requirements of this generator designation. The Contractor will comply with all provisions of Federal, State and local regulatory requirements applicable to this generator status regarding training and storage, handling, and disposal of all construction derived wastes.

3.13.2 Hazardous Waste/Debris Management

Identify all construction activities which will generate hazardous waste/debris. Provide a documented waste determination for all resultant waste streams. Hazardous waste/debris will be identified, labeled, handled, stored, and disposed of in accordance with all Federal, State, and local regulations including 40 CFR 261, 40 CFR 262, 40 CFR 263, 40 CFR 264, 40 CFR 265, 40 CFR 266, and 40 CFR 268.

Hazardous waste will also be managed in accordance with the approved Hazardous Waste Management Section of the Environmental Management Plan. Store hazardous wastes in approved containers in accordance with 49 CFR 173 and 49 CFR 178. Hazardous waste generated within the confines of Government facilities will be identified as being generated by the Government.

Prior to removal of any hazardous waste from Government property, all hazardous waste manifests must be signed by activity personnel from the Station Environmental Office. No hazardous waste will be brought onto Government property. Provide to the Contracting Officer a copy of waste determination documentation for any solid waste streams that have any potential to be hazardous waste or contain any chemical constituents listed in 40 CFR 372-SUBPART D. For hazardous wastes spills, verbally notify the Contracting Officer immediately.

3.13.2.1 Regulated Waste Storage/Satellite Accumulation/90 Day Storage Areas

If the work requires the temporary storage/collection of regulated or hazardous wastes, the Contractor will request the establishment of a Regulated Waste Storage Area, a Satellite Accumulation Area, or a 90 Day Storage Area at the point of generation. The Contractor must submit a request in writing to the Contracting Officer providing the following information:

Contract Number	_____	Contractor	_____
Haz/Waste or Regulated Waste POC	_____	Phone Number	_____
Type of Waste	_____	Source of Waste	_____

Emergency POC _____ Phone Number _____

Location of the Site: _____
(Attach Site Plan to the Request)

Attach a waste determination form. Allow ten working days for processing this request. The designated area where waste is being stored shall be barricaded and a sign identifying as follows: "DANGER - UNAUTHORIZED PERSONNEL KEEP OUT".

3.13.2.2 Sampling and Analysis of HW

a. Waste Sampling

Sample waste in accordance with EPA 530/F-93/004. Each sampled drum or container will be clearly marked with the Contractor's identification number and cross referenced to the chemical analysis performed.

b. Laboratory Analysis

Follow the analytical procedure and methods in accordance with the 40 CFR 261. The Contractor will provide all analytical results and reports performed to the Contracting Officer

c. Analysis Type

Identify waste hazardous material/hazardous waste by analyzing for the following properties as a minimum: ignitability, corrosiveness, total chlorides, BTU value, PCBs, TCLP for heavy metals, and cyanide.

3.13.2.3 Asbestos Certification

Items, components, or materials disturbed by or included in work under this contract do or do not involve asbestos. Other materials in the general area around where work will be performed may contain asbestos. All thermal insulation, in all work areas, should be considered to be asbestos unless positively identified by conspicuous tags or previous laboratory analysis certifying them as asbestos free.

Inadvertent discovery of non-disclosed asbestos that will result in an abatement action requires a change in scope before proceeding. Upon discovery of asbestos containing material not identified in the contract documents, the Contractor shall immediately stop all work that would generate further damage to the material, evacuate the asbestos exposed area, and notify the Contracting Officer for resolution of the situation prior to resuming normal work activities in the affected area.

The Contractor will not remove or perform work on any asbestos containing materials without the prior approval of the Contracting Officer. The Contractor will not engage in any activity, which would remove or damage such materials or cause the generation of fibers from such materials.

Asbestos containing waste shall be managed and disposed of in accordance with applicable environmental law. Asbestos containing waste shall be manifested and the manifest provided to the Contracting Officer.

3.13.2.4 Hazardous Waste Disposal

No hazardous, toxic, or universal waste shall be disposed or hazardous material abandoned on government property. And unless otherwise other wise noted in this contract, the government is not responsible for disposal of Contractor generated waste material.

The disposal of incidental materials used to accomplish the work including, but not limited to aerosol cans, waste paint, cleaning solvents, contaminated brushes, rags, clothing, etc. are the responsibility of the Contractor. The list is illustrative rather than inclusive.

The Contractor is not authorized to discharge any materials to sanitary sewer, storm drain, or water way or conduct waste treatment or disposal on government property without written approval of the Contracting Officer.

Control of stored waste, packaging, sampling, analysis, and disposal will be determined by the details in the contract. The requirements for jobs in the following paragraphs will be used as the guidelines for disposal of any hazardous waste generated.

a. Responsibilities for Contractor's Disposal

Contractor responsibilities include any generation of WHM/HW requiring Contractor disposal of solid waste or liquid.

(1) The Contractor agrees to provide all service necessary for the final treatment/disposal of the hazardous material/waste in accordance with all local, State and Federal laws and regulations, and the terms and conditions of the contract within sixty (60) days after the materials have been generated. These services will include all necessary personnel, labor, transportation, packaging, detailed analysis (if required for disposal, and/or transportation, including manifesting or completing waste profile sheets, equipment, and the compilation of all documentation is required).

(2) Contain all waste in accordance with 40 CFR 260, 40 CFR 261, 40 CFR 262, 40 CFR 263, 40 CFR 264, 40 CFR 265, 40 CFR 266, 40 CFR 268, 40 CFR 270, 40 CFR 272, 40 CFR 273, 40 CFR 279, 40 CFR 280, and 40 CFR 761.

(3) Obtaining a representative sample of the material generated for each job done to provide waste stream determination.

(4) Analyzing for each sample taken and providing analytical results to the Contracting Officer. Provide two copies of the results.

(5) Determine the DOT proper shipping names for all waste (each container requiring disposal) and will demonstrate how this determination is developed and supported by the sampling and analysis requirements contained herein to the Contracting Officer.

<u>Contractor Disposal Turn-In Requirements</u>

For any waste hazardous materials or hazardous waste generated which requires the Contractor to dispose of, the following conditions must be complied with in order to be acceptable for disposal:

(1) Drums compatible with waste contents and drums meet DOT requirements for 49 CFR 173 for transportation of materials.

(2) Drums banded to wooden pallets. No more than three (3) 55 gallon drums to a pallet, or two (2) 85 gallon over packs.

(3) Band using 1-1/4 inch minimum band on upper third of drum.

(4) Recovery materials label located in middle of drum, filled out to indicate actual volume of material, name of material manufacturer, other vendor information as available.

(5) Always have three to five inches of empty space above volume of material. This space is called 'outage'.

3.13.3 Class I and II ODS Prohibition

Class I and II ODS as defined and identified herein will not be used in the performance of this contract, nor be provided as part of the equipment. This prohibition will be considered to prevail over any other provision, specification, drawing, or referenced documents. Regulations related to the protection of stratosphere ozone may be found in 40 CFR 82.

Heating and air conditioning technicians must be certified through an EPA-approved program. Copies of certifications shall be maintained at the employees' place of business and be carried as a wallet card by the technician, as provided by environmental law. Accidental venting of a refrigerant is a release and shall be reported to the Contracting Officer.

3.13.4 Universal Waste/e-Waste Management

Universal waste including but not limited to some mercury containing building products such florescent lamps, mercury vapor lamps, high pressure sodium lamps, CRTs, batteries, aerosol paint containers, electrical equipment containing PCBs, and consumed electronic devices, shall be managed in accordance with applicable environmental law and installation instructions.

3.14 DUST CONTROL

Keep dust down at all times, including during nonworking periods. Sprinkle or treat, with dust suppressants, the soil at the site, haul roads, and other areas disturbed by operations. Dry power brooming will not be permitted. Instead, use vacuuming, wet mopping, wet sweeping, or wet power brooming. Air blowing will be permitted only for cleaning nonparticulate debris such as steel reinforcing bars. Only wet cutting will be permitted for cutting concrete blocks, concrete, and bituminous concrete. Do not unnecessarily shake bags of cement, concrete mortar, or plaster.

3.14.1 Dirt and Dust Control Plan

Submit truck and material haul routes along with a plan for controlling dirt, debris, and dust on base roadways. As a minimum, identify in the plan

the subcontractor and equipment for cleaning along the haul route and measures to reduce dirt, dust, and debris from roadways.

3.15 ABRASIVE BLASTING

3.15.1 Blasting Operations

The use of silica sand is prohibited in sandblasting.

Provide tarpaulin drop cloths and windscreens to enclose abrasive blasting operations to confine and collect dust, abrasive, agent, paint chips, and other debris. Perform work involving removal of hazardous material in accordance with 29 CFR 1910.

3.15.2 Disposal Requirements

Submit analytical results of the debris generated from abrasive blasting operations per paragraph entitled Laboratory Analysis of this section. Hazardous waste generated from blasting operations will be managed in accordance with paragraph entitled "Hazardous Waste\Debris Management" of this section and with the approved HWMP. Disposal of non-hazardous abrasive blasting debris will be in accordance with paragraph entitled, "Control and Disposal of Solid Wastes".

3.16 NOISE

Make the maximum use of low-noise emission products, as certified by the EPA. Blasting or use of explosives will not be permitted without written permission from the Contracting Officer, and then only during the designated times. Confine pile-driving operations to the period between 8 a.m. and 4 p.m., Monday through Friday, exclusive of holidays, unless otherwise specified.

3.17 MERCURY MATERIALS

Mercury is prohibited in the construction of this facility, unless specified otherwise, and with the exception of mercury vapor lamps and fluorescent lamps. Dumping of mercury-containing materials and devices such as mercury vapor lamps, fluorescent lamps, and mercury switches, in rubbish containers is prohibited. Remove without breaking, pack to prevent breakage, and transport out of the activity in an unbroken condition for disposal as directed. Immediately report to the Environmental Office and the Contracting Officer instances of breakage or mercury spillage. Clean mercury spill area to the satisfaction of the Contracting Officer.

Cleanup of a mercury spill shall not be recycled and shall be managed as a hazardous waste for disposal.

-- End of Section --

SECTION 01 57 19.01 20

SUPPLEMENTAL TEMPORARY ENVIRONMENTAL CONTROLS
01/08

PART 1 GENERAL

1.1 REFERENCES

The publications listed below form a part of this specification to the extent referenced. The publications are referred to within the text by the basic designation only. If state or local references are not provided here, refer to Section 01 57 19.00 20 for appropriate references.

PACIFIC

Guam

1.2 SUBMITTALS

Government approval is required for submittals with a "G" designation; submittals not having a "G" designation are for Contractor Quality Control approval. When used, a designation following the "G" designation identifies the office that will review the submittal for the Government. The following shall be submitted in accordance with Section 01 33 00 *Submittal Procedures*:

SD-01 Preconstruction Submittals

Excavation Permits; G

Hazardous Operations Permit; G

Dirt and Dust Control Plan; G

Storage Inventory Form; G

SD-06 Test Reports

1.3 REGIONAL REQUIREMENTS

1.3.1 PACIFIC

1.3.1.1 Control and Disposal of Ionization Smoke Detectors and Tritium Exit Signs

a. Material Bagging

Remove existing ionization smoke detectors and tritium exit signs, and place like types, together; i.e. same manufacturer and model number, in a plastic bag. Provide a label on the bag with the following data:

Manufacturer: Activity:
Model No.: Contract No.:
Isotope/Quantity (if known):

b. Material Storage

Store plastic bags in 55-gallon covered drum(s). Do not seal the drum(s). Provide a label entitled “RADIOACTIVE” and storage inventory form applied to exterior surface of the cover and side of the drum(s). Provide a record copy, with the following data (example), for each drum storage inventory to the Contracting Officer, the RASO at NAVFAC Marianas.

c. Storage and Disposal by Contractor

The Contractor will be responsible for storage and disposal of ionization smoke detectors and tritium exit signs in accordance with Federal, State and local laws and regulations.

PART 2 PRODUCTS

Not used.

PART 3 EXECUTION

Not used.

-- End of Section --

SECTION 01 58 00

PROJECT IDENTIFICATION
01/08

PART 1 GENERAL

1.1 REFERENCES

The publications listed below form a part of this specification to the extent referenced. The publications are referred to within the text by the basic designation only.

AMERICAN WOOD-PRESERVERS' ASSOCIATION (AWPA)

AWPA C1	(2003) All Timber Products - Preservative Treatment by Pressure Processes
AWPA C2	(2003) Lumber, Timber, Bridge Ties and Mine Ties - Preservative Treatment by Pressure Processes

1.2 SUBMITTALS

Government approval is required for submittals with a "G" designation; submittals not having a "G" designation are for Contractor Quality Control approval. The following shall be submitted in accordance with Section 01 33 00 SUBMITTAL PROCEDURES:

SD-02 Shop Drawings

Preliminary one line drawings of project rendering; G

Preliminary drawing indicating layout and text content; G

SD-04 Samples

Final rendering sample; G

Final framed rendering and copies; G

1.3 QUALITY ASSURANCE

1.3.1 Rendering

Per task order requirements, provide the project rendering in accordance with the following drawing stages as required in paragraph entitled "Submittals". The following submittal data is required to properly identify the appropriate view and approve the final rendering of the facility. The final painted rendering will be used to produce the image for the signboard and framed photographic copies provided to the Contracting Officer.

1.3.1.1 Preliminary One Line Drawings

Provide three different views of the facility in a preliminary single line drawing (black and white) format. These three views will represent the best angles at which to view the proposed facility showing the best design features and the three dimensional character of the facility.

1.3.1.2 Final Rendering Sample

Provide a photographic copy ((8 x 10 inches,) 200 x 250 millimeters, minimum size) of final rendering for approval of color, landscaping, and foreground/background development prior to final submittal.

1.3.1.3 Final Framed Rendering and Copies

Provide final full color rendering of the proposed facility as specified.

1.4 PROJECT SIGN

Prior to initiating any work on site, provide one project identification sign at the location designated per task order requirements. Construct the sign in accordance with project sign detail attached. Maintain sign throughout the life of the project. Upon completion of the project, remove the sign from the site. Provide color rendering of the project. Reproduce the rendering on the signboard or enclose a copy of the rendering under a water-proof, transparent cover, and caulk for weather protection.

1.4.1 Project Identification Signboard (Navy)

A project identification signboard shall be provided in accordance with attached Plates 2, 3, 4, and 5. Provide preliminary drawing indicating layout and text content. The signboard shall be provided at a conspicuous location on the job site where directed by the Contracting Officer.

a. The field of the sign shall consist of a 1200 by 2400 mm (4 by 8 foot) sheet of grade B-B medium density overlaid exterior plywood.

b. Lumber shall be B or better Southern pine, pressure-preservative treated in accordance with AWPA C1 and AWPA C2. Nails shall be aluminum or galvanized steel.

c. The entire signboard and supports shall be given one coat of exterior alkyd primer and two coats of exterior alkyd enamel paint. The lettering and sign work shall be performed by a skilled sign painter using paint known in the trade as bulletin colors. The colors, lettering sizes, and lettering styles shall be as indicated. Where preservative-treated lumber is required, utilize only cured pressure-treated wood which has had the chemicals leached from the surface of the wood prior to painting.

d. Use spray applied automotive quality high gloss acrylic white enamel paint as background for the NAVFAC logo. NAVFAC logo shall be an

applied 2 millimeter film sticker/decal with either transparent or white background or paint the logo by stencil onto the sign. The weather resistant sticker/decal film shall be rated for a minimum of 2-year exterior vertical exposure. The self-adhering sticker shall be mounted to the sign with pressure sensitive, permanent acrylic adhesive. Shop cut sticker/decal to rectangular shape and provide pull-off backing sheet on adhesive side of design sticker for shipping.

e. Sign paint colors (manufacturer's numbers/types listed below for color identification only)

(1) Blue = To match dark blue color in the NAVFAC logo.

(2) White = To match Brilliant White color in the NAVFAC logo.

f. NAVFAC logo must retain proportions and design integrity. NAVFAC logos in electronic format may be obtained from the NAVFAC web portal via the following link: https://portal.navfac.navy.mil/portal/page?_pageid=181,3465071&_dad=portal&_scehma=PORTAL. Use the following to choose color values for the paint to be used:

(1) Dark Blue = equivalent to CMYK values 100, 72, 0, 8.

(2) Light Blue = equivalent to CMYK values 69, 34, 0, 0.

(3) Cyan = equivalent to CMYK values 100, 9, 0, 6.

(4) Yellow = equivalent to CMYK values 0.9, 94, 0.

g. Final signboard artwork (rendering) may be either mounted under plexiglass as indicated in attached Plates 2 and 5, or at the Contractor's option may be electrostatically printed on 4 mil self-adhering, weather resistant, glossy vinyl film and mounted to signboard. Provide film that is capable of full color reproduction of the building rendering and cover it with an ultra-violet protection film. Laminate the 2 mil satin gloss clear protection film to the white 4 mil vinyl image film. Utilize pressure sensitive "controltac" adhesive to attach rendering to signboard and smooth out surface with hand pressure tools in accordance with manufacturer's recommendations. Shop cut sticker to size required and provide pull-off backing sheet on adhesive side of film for shipping. Provide the rendering on film that is rated for a minimum of 2 years exterior vertical exposure.

1.4.1.1 Project Rendering

Provide a full color rendering of the proposed facility as specified below:

a. Provide rendering by a company that regularly does this work as a major component of their normal business.

b. Colors used on rendering shall match the exterior color scheme indicated in the contract document.

c. The rendering shall be a full vignette/fully developed, on heavy illustration board. Approximate finished size shall be (24 x 30 inches) 610 x 760 mm with minimum inside mat dimension of (16 X 20 inches) 406 x 508 mm. Draw the rendering at human eye level view, painted with Case-in Tempera.

d. Provide three preliminary single line black and white perspectives prior to proceeding with the color rendering. Provide these preliminary perspectives within 30 days after contract award for evaluation by the Contracting Officer. The view selected by the Contracting Officer shall be developed into the final rendering.

e. Provide the final rendering sample photograph within 30 days after approval of preliminary single line drawings. Provide this sample photograph for evaluation by the Contracting Officer.

f. Provide final original color rendering, three (3) full size photographic reproductions of the original rendering, and the photographic negative. Original and reproductions shall be mounted on acid free board, double-matted (acid free matting) with appropriate colored board and framed in contemporary metal frames, using non-glare glass. Project name, location, Architect/Engineer firm's name shall be printed on the matting. On the back of the renderings and reproductions, indicated the project name, the location, the contract number, and the date of reproduction.

g. The rendering, the photographic copies, and the negative shall be shipped in resilient packaging to ensure damage-free delivery.

h. Provide copy of rendering to be used for the signboard that has been protected from UV damage as per specifications.

PART 2 PRODUCTS

Not used.

PART 3 EXECUTION

Not used.

-- End of Section --

SECTION 01 74 19.05 20

CONSTRUCTION AND DEMOLITION WASTE MANAGEMENT FOR DESIGN-BUILD
11/07

PART 1 GENERAL

1.1 GOVERNMENT POLICY

Government policy is to apply sound environmental principles in the design, construction and use of facilities. As part of the implementation of that policy the Contractor shall: (1) practice efficient waste management when sizing, cutting, and installing products and materials and (2) use all reasonable means to divert construction and demolition waste from landfills and incinerators and to facilitate their recycling or reuse.

1.2 PLAN

A waste management plan shall be submitted within 15 days after notice to proceed and prior to initiating any site preparation work. The plan shall include the following:

a. Name of individuals on the Contractor's staff responsible for waste prevention and management.

b. Actions that will be taken to reduce solid waste generation.

c. Description of the specific approaches to be used in recycling/reuse of the various materials generated, including the areas and equipment to be used for processing, sorting, and temporary storage of wastes.

d. Characterization, including estimated types and quantities, of the waste to be generated.

e. Name of landfill and/or incinerator to be used and the estimated costs for use, assuming that there would be no salvage or recycling on the project.

f. Identification of local and regional reuse programs, including non-profit organizations such as schools, local housing agencies, and organizations that accept used materials such as materials exchange networks and Habitat for Humanity.

g. List of specific waste materials that will be salvaged for resale, salvaged and reused, or recycled. Recycling facilities that will be used shall be identified.

h. Identification of materials that cannot be recycled/reused with an explanation or justification.

i. Anticipated net cost savings determined by subtracting Contractor program management costs and the cost of disposal from the revenue generated by sale of the materials and the incineration and/or landfill cost avoidance.

1.3 RECORDS

Records shall be maintained to document the quantity of waste generated; the quantity of waste diverted through sale, reuse, or recycling; and the quantity of waste disposed by landfill or incineration. The records shall be made available to the Contracting Officer during construction, and a copy of the records shall be delivered to the Contracting Officer upon completion of the construction.

1.4 DISPOSAL

Except as otherwise specified in other sections of the specifications, disposal shall be in accordance with the following:

1.4.1 Reuse

First consideration shall be given to salvage for reuse since little or no re-processing is necessary for this method, and less pollution is created when items are reused in their original form. Sale or donation of waste suitable for reuse shall be considered. Salvaged materials, other than those specified in other sections to be salvaged and reinstalled, shall not be used in this project.

1.4.2 Recycle

Waste materials not suitable for reuse, but having value as being recyclable, shall be made available for recycling whenever economically feasible.

1.4.3 Waste

Materials with no practical use or economic benefit shall be disposed at a landfill or incinerator.

PART 2 PRODUCTS

Not used.

PART 3 EXECUTION

Not used.

-- End of Section --

SECTION 01 78 24.05 20

FACILITY OPERATION AND MAINTENANCE SUPPORT INFORMATION
11/07

PART 1 GENERAL

1.1 GENERAL REQUIREMENTS

This section provides the requirements for operation and maintenance support information (OMSI). OMSI contains detailed as-built information describing the efficient, economical and safe operation and maintenance, and repair of the facility. OMSI is provided as hard copy, manuals, .pdf files, and computerized maintenance management system (CMMS) data. The OMSI is to be factual, concise, comprehensive and written to be easily used by maintenance personnel. Descriptive matter and theory must include technical details that are essential for a comprehensive understanding of the operation, maintenance and repair of the system. The OMSI preparer shall ensure that OMSI reflect changes to systems and equipment, made during construction. The words "system", "systems", and "equipment", when used in this document refer to as-built systems and equipment.

1.1.1 Organization of OMSI

Prepare the OMSI in three parts. PART I - Facility Information, PART II - Primary Systems Information, and PART III - Product Data. Cross-referencing within or between OMSI Parts must be specific.

1.1.2 Sources of Data

The sources of data needed to prepare the OMSI include but are not limited to, the design plans and specifications, field visits, approved construction submittals and manufacturer's catalog data for materials, methods, and systems used in this contract.

1.1.3 OMSI Units of Measure

Provide OMSI utilizing the units of measure required by the RFP, Refer to UFGS Section 01 33 10.05 20, Design Submittal Procedures. Metric OMSI shall be in SI (System International) metric units exclusively

1.1.4 Schedule of Operation and Maintenance Data Packages

Refer to UFGS Section 01 78 23, OPERATION AND MAINTENANCE DATA, located at the website location: http://www.wbdg.org/ccb for descriptions of SD-10, Operation and Maintenance Data packages, when referenced in Part 5, PRESCRIPTIVE SPECIFICATIONS, or in other UFGS sections. Submit Operation and Maintenance Manuals in accordance with Section 01 78 24.05 20 FACILITY OPERATION AND MAINTENANCE SUPPORT INFORMATION. When using UFGS Sections that reference 01 78 23, OPERATION AND MAINTENANCE DATA, change reference to 01 78 24.05 20, FACILITY OPERATION AND MAINTENANCE SUPPORT INFORMATION.

1.2 SUBMITTALS

The use of a "G" following a submittal indicates that a Government approval action is required. Submit the following in accordance with Section 01 33

10.05 20 DESIGN SUBMITTAL PROCEDURES and Section 01 33 00.05 20 CONSTRUCTION SUBMITTAL PROCEDURES.

SD-06 Test Reports

Validation Site Visit and Presentation; G

SD-11 Closeout Submittals

OMSI, Preliminary Submittal; G

OMSI, 100% - Prefinal Submittal; G

OMSI, Final Submittal; G

1.3 SUBMITTAL FORMAT

1.3.1 Hard Copies

Bind the OMSI in durable, hard cover, three-ring, water and grease resistant binders, which hold 8.5" X 11" sheets. Binders shall have clear pockets located on the front and on the spine that hold printed sheets. Parts I, II, and III are separate binders with white, blue, and red spine inserts (respectively). Use high quality paper and dividers of heavy-duty paper with plastic reinforced holes and integrated tabs. Tabs must be of varying size and color to distinguish organization. Use plain tabs to show the UNIFORMAT II number and title in Part III, Product Data. Provide a Master Table of Contents for each OMSI binder. Identify each binder on both the cover insert sheet and the spine insert sheet with the following information:

1. OMSI Part I, II or III with appropriate titles
2. Building Number
3. Project Title
4. Activity and Location
5. Construction Contract Number
6. Prepared For: (Contracting Agency)
7. Prepared By
8. Volume Number - Each binder is a single volume. Number each volume consecutively.

1.3.2 Electronic Format (PDF)

Provide the OMSI on Compact Disk using Adobe Acrobat 5.0 or similar software capable of producing PDF (Portable Document Format) files. The PDF file is duplicate of the hard copy format. The PDF files shall be indexed by part (Facility Information, Primary Systems Information, and Product Data) and each entry identified in the table of contents.

1.3.3 Computerized Maintenance Management System (CMMS) Data

Provide data in format that can be imported into Single Platform Maximo CMMS.

1.4 SUBMITTAL REQUIREMENTS

1.4.1 Preliminary Submittal

Submit the Preliminary submittal when construction is 50% complete. Provide two hard copies to the Contracting Officer. Present the submittal in sufficient detail to evaluate the data collection and arrangement process. One of these copies, reviewed by the Contracting Officer, with review comments, will be returned to the Contractor for preparation of the 100% submittal. Include in the submittal, as a minimum, all available Part I, Facility Information; all systems of Part II, Primary Systems Information (at least one system shall be essentially complete and the remaining systems shall be at least 50% complete); and at least two divisions of Part III, Product Data.

1.4.2 100% - Prefinal Submittal

Provide two hard copies to the Contracting Officer. The 100% - Prefinal submittal is due 30 days prior to Beneficial Occupancy Date (BOD). This submittal shall be a complete, working document that can be used to operate and maintain the facility.

1.4.3 Final Submittal

Provide two hard copies and two sets of electronically formatted information to the Contracting Officer 30 days prior to the Beneficial Occupancy Date (BOD). Include the final submittal in the Construction Schedule.

PART 2 PRODUCTS

2.1 DESCRIPTION OF WORK

2.1.1 OMSI Part I - Facility Information

a. General Facility and System Description - Describe the function of the facility. Detail the overall dimensions of the facility, number of floors, foundation type, expected number of occupants, and facility Category Code. List and generally describe all the facility systems listed in Part II, Primary Systems Information and any special building features (for example, HVAC Controls, Sprinkler Systems, cranes, elevators, and generators). Include photographs marked up and labeled to show key operating components and the overall facility appearance. Include a copy of the final "Completion Certification" which certifies completion and compliance of construction by the Contractor. This documentation will be provided by the Construction Quality Control Manager.

b. Basis of Design - Include the Basis of Design that shows the basic design scope of work, assumptions and the original intentions of the design A/E. Include a copy of the final "Design Quality Control Report Certification" which verifies conformance of the project design to the Request for Proposal. The Commissioning Authority or the Designer of Record will provide this documentation.

c. Safety Hazards - List all residual hazards identified in the Requirements Hazard Analysis as prepared by the design A/E. Provide recommended safeguards for each identified hazard.

d. Floor Plans - Provide uncluttered, legible 11" x 17" floor plans. Include only room numbers, type or function of spaces, and overall facility dimensions on the floor plans. Do not include construction instructions, references, frame numbers, etc.

e. Utility Connection and Cutoff Plans - Provide utility site plans and floor plans that indicate the main interior and exterior connection and cutoff points for all utilities. Include enough information to enable someone unfamiliar with the facility to locate the connection and cutoff points. Indicate the room number, panel number, circuit breaker, valve number, etc., of each connection and cutoff point, and what that connection and cutoff point controls. These plans are in addition to Floor plans.

f. Equipment Warranty Tags and Guarantor's Local Representative - Provide with each warranty the name, address, and telephone number of the guarantor's representative nearest to the location where the equipment and appliances are installed. The guarantor's representative, upon request of the station representative, shall honor the warranty during the warranty period, and shall provide the services prescribed by the terms of the warranty. At the time of installation, tag each item of warranted equipment with a durable, oil- and water-resistant tag approved by the Contracting Officer. Attach tag with copper wire and spray with a clear silicone waterproof coating. Leave the date of acceptance and QC's signature blank until project is accepted for beneficial occupancy. Tag shall show the following information:

EQUIPMENT/PRODUCT WARRANTY TAG

Type of Equipment/Product _____
Warranty Period _____ From _____ To _____
Contract No. _____
Inspector's Signature _____ Date Accepted
_____

Contractor:
Name: _____
Address: _____
Telephone: _____

Warranty Contact: _____
Name: _____
Address: _____
Telephone: _____

STATION PERSONNEL TO PERFORM ONLY OPERATIONAL MAINTENANCE

g. Extended Warranty Information - List and include copies of all warranties for products, equipment, components, and subcomponents whose duration exceeds one year. Cross-reference the list to the warranty copies included in Part III, Product Data. For each warranty listed indicate the applicable specification section, duration, start date, end date, and the point of contact for warranty fulfillment. Also, list or reference all specific operation and maintenance procedures that must be performed to keep the warranty valid.

h. Equipment and Warranty Tags Listing - Provide a table that lists the major equipment shown on the design equipment schedules and written warranties for equipment/products provided. Show the item descriptions, warranty information, locations, model numbers; and the names, addresses, and telephone numbers of the manufacturers, suppliers, contractor and subcontractors.

i. HVAC Filters - Provide a table that lists the quantity, type, size, and location of each HVAC filter.

j. Floor Coverings, Wall Surfaces, Ceiling Surfaces - Provide a table that lists by room number (including hallways and common spaces), the type, and area of finish. The table will include a facility summary of the total area for each type of space and floor, wall, or ceiling finish.

k. Windows - Provide a table that lists by room number (including hallways and common spaces), the type of window, window size, number of each size and type, and special features. The table will include a facility summary of the total number for each type and size of window.

l. Light Fixtures - Provide a table that lists by room number (including hallways and common spaces), type of light fixture, number of light fixtures, type of bulbs or tubes, and number of bulbs or tubes. The table will include a facility summary of the total number of fixtures of each type and number of bulbs or tubes of each type.

m. Plumbing Fixtures - Provide a table that lists by room number, the number and type of plumbing and bathroom plumbing fixtures (for example, sinks, toilets, urinals, showers and drinking fountains).

n. Roofing - Provide the total area of each type of roof surface and system. Provide the name of the roofing product and system; manufacturer's, supplier's, and installer's names, addresses, and phone numbers. For each type of roof, provide a recommended inspection, maintenance and repair schedule that details checkpoints, frequencies, and prohibited practices. List roof structural load limits.

2.1.2 Part II - Primary Systems Information

OMSI Part II, Primary Systems Information requires using a systems approach. This approach requires that consideration be given to the entire system (that is, the interfaces of equipment, connections and material flow within the system). Use Notes, Cautions and Warnings throughout the Part II, Primary Systems Information to emphasize important and critical instructions and procedures.

OMSI Part II, Primary Systems Information are required for the primary systems listed below:

1. Domestic water pressure boosting system
2. Plumbing systems, including temperature actuated thermostatic water mixing valve
3. HVAC systems, including chillers, boilers, heat pumps, air handling equipment, exhaust fans, fan coil units, VAV boxes, heart recovery

wheels, hot and chilled water hydronic systems, control valves, and backflow preventers.
4. Direct Digital Controls/Space Temperature Controls
5. Steam condensate Pumps, Steam PRV valves.
6. Electrical systems, including transformers, diesel electric generator sets, automatic transfer switches, primary switchgear, secondary switchgear, high voltage switches, variable frequency drives, and frequency converters
7. Fire protection systems and fire alarm and detection systems
8. Site mechanical utilities, including cathodic protection
9. Site electrical utilities, including substations, transformers, and pad mounted switchgear
10. Wastewater pumping stations.

For each system, address;

a. Operation

(1) System Description - Provide a detailed discussion of the system composition and operation. Include technical details that are essential for an understanding of the system.

(2) Start-Up and Shutdown Procedures - Provide step by step instructions to bring systems from static to operational configurations and from operating to shutdown status.

(3) Normal and Emergency Operating Instructions - Provide a discussion of the normal and emergency operation and control of the system. Address operating norms (for example, temperatures, pressures, and flow rates) expected at each zone or phase of the system. Supplement the discussion with control and wiring diagrams and data. Include shutdown instruction for fires, explosions, spill, or other contingencies.

(4) System Flow Diagrams - Provide a flow diagram indicating system liquid, air or gas flow during normal operations. Integrate all system components into the diagram. A compilation of non-integrated, flow diagrams for the individual system components are not acceptable.

(5) Diagrammatic Plans - Provide floor plans indicating the location of equipment and configuration of the system installation. Include the configuration of associated piping or wiring. Subordinate structural features to utility features.

(6) Field Test Reports - Provide Field Test Reports (SD-06) that apply to equipment associated with the system.

(7) Operator Servicing Requirements - Provide instructions for services to be performed by the operator such as lubrication, adjustments, and inspection.

(8) Valve List - Provide a list of all valves associated with the system. Show valve type, identification number, function, location and normal operating position.

b. Preventive Maintenance - Preventive Maintenance Procedures, and Schedules - Provide Task Card for each individual maintenance task identified on the PM plan and Schedule. Include detailed PM procedures, safety instructions and precautions including lock out/tag out precautions, required skill level, number of personnel needed, frequency, special tools needed, parts needed, and estimated time required to complete the task. Include lubrication schedules indicating types, grades and capacities.

c. Troubleshooting Guides and Diagnostic Techniques - Provide step-by-step procedures for isolating the cause of system malfunctions. The procedures shall clearly state indications or symptoms of trouble; the sequential instructions, including checks and tests to be performed and conditions to be sought, to determine the cause; and remedial measures to bring the equipment and system to operating condition. Identify special test equipment required to perform the procedures. Start the troubleshooting guide at the system level and proceed to a level where detailed manufacturer's troubleshooting procedures for equipment and components can be referenced. Provide clear references to repair procedures included in Part III, Product Data.

2.1.3 PART III – Construction Submittals

This portion of the OMSI manual provides a record of the as-built products, materials, and equipment used in Part 4, PERFORMANCE TECHNICAL SPECIFICATIONS, and Part 5, PRESCRIPTIVE SPECIFICATIONS, of the Request for Proposal (RFP). This submittal includes a complete copy of the approved construction submittal used in the facility construction. Include, as a minimum, O&M Data, Materials, Equipment, Data Sheets, Test Reports, Warranties, Certificates, and Shop Drawings.

PART 3 EXECUTION

3.1 VALIDATION AND PRESENTATION

Provide a validation presentation of the OMSI Prefinal submittal to the users and field verify the OMSI's completeness and accuracy. Perform the validation site visit at the 100% - Prefinal OMSI submittal stage. Contact the Contracting Officer for the exact date.

The Commissioning Authority (CA) shall attend and provide a certifying statement that validation site visit and presentation is complete.

-- End of Section --

Solicitation No.
N40192-10-R-2800

SMALL BUSINESS MULTIPLE AWARD CONSTRUCTION CONTRACT (MACC)

VARIOUS LOCATIONS, GUAM

PART III
PROJECT PROGRAM

See Separate File
For the Seed Project

Solicitation No.
N40192-10-R-2800

SMALL BUSINESS MULTIPLE AWARD CONSTRUCTION CONTRACT (MACC)

VARIOUS LOCATIONS, GUAM

PART IV
PERFORMANCE TECHNICAL SPECIFICATIONS

SECTION A10

FOUNDATIONS
8/08

A10 GENERAL

A10 1.1 DESIGN GUIDANCE

Provide the design and installation in accordance with the following references. This Performance Technical Specification (PTS) adds clarification to the fundamental requirements contained in the following Government Standards. The general requirements of this PTS section are located in PTS Section Z10, *General Performance Technical Specification*.

A10 1.1.1 Government Standards

Unified Facilities Criteria (UFC)

UFC 3-100-10N, *Architecture*

UFC 3-220-01N, *Geotechnical Engineering Procedures for Foundation Design of Buildings and Structures*

UFC 3-300-10N, *Structural Engineering*

Unified Facilities Guide Specifications (UFGS)

UFGS Section 31 23 00.00 20 *Excavation and Fill*

A10 1.2 GENERAL REQUIREMENTS

A10 1.2.1 Earthwork

The Designer of Record shall utilize the following UFGS Specifications for the project specification:

Section 31 23 00.00 20 *Excavation and Fill*

A10 1.2.2 Geotechnical Report

A10 1.2.2.1 Subsurface Soils Information

Any provided subsurface soil information is included for the contractor’s information only, and is not guaranteed to fully represent all subsurface conditions. The data included in this RFP is to assist in proposal preparation. Contractor shall perform, at his expense, such subsurface exploration, investigation, testing, and analysis as his Designer of Record deems necessary for the design and construction of the foundation system.

A10 1.2.2.2 Contractor-provided Geotechnical Engineer

The Contractor is required to retain a Geotechnical Engineer experienced and licensed in the geographic region of the project to interpret any provided data as related to his design concept and develop requirements for bidding. Requirements stated in Parts 3 and 4 of the RFP take precedence over any content of any included

geotechnical report. Additional requirements for the geotechnical design of this project are provided elsewhere in this RFP.

All work by the Contractor-provided Geotechnical Engineer at the project location shall be coordinated with the Contracting Officer and shall not interfere with normal base operations. When providing the Foundation Work Design submittal, provide the Contractor's Geotechnical Report (an Adobe Acrobat PDF version on CD and two printed copies) for review and record keeping purposes. The report shall become the property of the Government. Provide the Geotechnical reports generated during construction, such as pile load tests or PDA results, pile driving results and analysis, to the Contracting Officer (an Adobe Acrobat PDF version and two printed copies) for record keeping purposes.

A10 1.2.2.3 Contractor-Provided Geotechnical Report

Submit a written Geotechnical report based upon Government-provided subsurface investigation data and all additional field and laboratory testing accomplished at the discretion of the Contractor's Geotechnical Engineer. The Geotechnical Report shall include the following:

a. The project site description, vicinity map and site map indicating the location of borings and any other sampling locations. Provide notes explaining any abbreviations or symbols used.

b. Results of all applicable field and laboratory testing, whether Government or Contractor-provided. Address existing subsurface conditions, selection and his design of the foundation and floor slab, all underground construction including utility installation and all other site-specific requirements (such as soil stabilization and slope stability).

c. Engineering analysis, discussion and recommendations addressing:

1) Settlement analysis. Settlement shall be limited as required in EM 1110-1-1004, *Settlement Analysis*

2) Bearing Capacity Analysis.

3) Foundation selection and construction considerations (shallow, deep, special); dimensions, and installation procedures.

4) Site preparation (earthwork procedures and equipment), compaction requirements, building slab preparation (as applicable), soil sensitivity to weather and equipment, groundwater influence on construction, mitigation of expansive soils or liquefaction potential, dewatering requirements, and other necessary instructions.

5) Sheeting and shoring considerations, as applicable

6) Pavement design calculations with parameters defined, actual or assumed, and recommended thicknesses and materials, whether for design or for proposed modifications to the RFP provided pavement design

7) Haul routes and stockpile locations for earthwork, as applicable.

8) Calculations to support conclusions and recommendations.

9) Recommendations shall be presented on a structure-by-structure Basis.

The Geotechnical Report shall be signed by the Contractor-provided Geotechnical Engineer.

The submitted report shall be accompanied by a cover letter identifying any report recommendations of the report proposed to be adopted into the design which are interpreted by the Contractor as a change condition to the Geotechnical or Pavement related requirements of the RFP.

A10 1.2.2.4 Geotechnical Site Data required in Design Drawings

The Contractor's final design drawings shall include the Government-provided subsurface data presented in the RFP as noted below, as well as all additional borings and laboratory test data results performed by the Contractor. The data provided shall include:

a. Logs of Borings and related summary of laboratory test results and groundwater observations. Provide 24-hour groundwater observations for at least 20% of the borings, minimum one boring. Provide notes explaining any abbreviations or symbols used and describing any special site preparation requirements.

b. The locations of all borings shall be indicated on the drawings. The applicable design drawings shall be revised to reference the Contractor's Geotechnical Report as being a basis for design.

A10 1.2.3 Pile Driver Analyzer (PDA)

If deemed necessary by the Designer-of-Record's geotechnical engineer, the dynamic wave equation method of analysis, pile driver analyzer, shall be used to validate pile and pile hammer compatibility, establish pile driving criteria, establish terminal penetration resistance, or verify as-driven capacity of the pile. The PDA or static load test(s) shall be required for piles with required allowable design capacity equal to or greater than 40 tons.

A10 1.3 PERFORMANCE VERIFICATION AND ACCEPTANCE TESTING

Verification of satisfactory construction and system performance of the foundations shall be via Performance Verification Testing, and by field inspection, as detailed in this section of the RFP and in UFGS Section 01 45 00.05 20. Provide special tests and special inspections in accordance with UFGS Section 01 45 00.05 20, *Design and Construction Quality Control.*

A10 1.3.1 Earthwork

Perform quality assurance for earthwork in accordance with IBC Chapter 17 and UFGS Section 31 23 00.00 20. If a registered Professional Engineer is required to provide inspection of excavations and soil/groundwater conditions throughout construction, the Engineer shall be responsible for performing pre-construction and periodic site visits throughout construction to assess site conditions. The Engineer, with the concurrence of the contractor and the Contracting Officer, shall update the excavation, sheeting, shoring, and dewatering plans as construction progresses to reflect actual site conditions and shall submit the updated plan and a written report (with professional stamp) at least monthly informing the Contractor and the Contracting Officer of

the status of the plan and an accounting of Contractor adherence to the plan; specifically addressing any present or potential problems. The Engineer shall be available to meet with the Contracting Officer at any time throughout the contract duration.

A10 1.3.2 Piles

If piles are required, perform quality assurance for pile construction in accordance with UFC 1-200-01, *General Building Requirements*. Pile installation procedures and installed piles shall be inspected and found to be in compliance with these specifications prior to acceptance of the work.

Install test piles as directed by the Contractor's Geotechnical Engineer. Pile load tests, if required, shall be performed in accordance with UFC 1-200-01. Test pile installation procedures shall be as directed by the Contractor's Geotechnical Engineer. Results of the pile test program and final pile installation criteria shall be submitted to the Contracting Officer prior to installation of the production piles. If deemed necessary by the Designer-of-Record's Geotechnical Engineer, the dynamic wave equation method of analysis, pile driver analyzer, shall be used to validate pile and pile hammer compatibility, establish pile driving criteria, establish terminal penetration resistance, or verify as-driven capacity of the pile. The PDA or static pile load test (ASTM D 1143) shall be required for piles with an allowable design capacity equal to or greater than 40 tons. When required, perform PDA on all indicator or test piles. Perform CAPWAP analysis on at least one test (indicator) pile to determine capacity with a minimum three day set-up and develop pile installation criteria.

A10 1.4 DESIGN SUBMITTALS

Design submittals shall be in accordance with Z10, *General Performance Technical Specifications*, UFGS section 01 33 10.05 20, *Design Submittal Procedures,* UFC 1-300-09N, *Design Procedures* and UFC 3-220-01N, *Geotechnical Engineering Procedures for Foundation Design of Buildings and Structures*.

UFGS sections listed below or in the body of the PTS text are to be used by the Designer of Record (DOR) as a part of the design submittal. The DOR shall edit these referenced UFGS sections and submit them as a part of the design submittal specification. Edit the specification sections in accordance with the limitations stated in PTS section Z10, *General Performance Technical Specifications*.

UFGS Section 31 23 00.00 20 *Excavation and Fill*

A10 1.5 CONSTRUCTION SUBMITTALS

Submit construction submittals in accordance with PTS Section Z10, *General Performance Technical Specifications.* In addition to the Z10 requirements, the Designer of Record (DOR) shall approve the following submittals as a minimum:

All structural elements necessary for construction

Contractor-provided geotechnical report

Controlled fill or backfill material tests

Test pile and production pile installation records

Pile load testing reports

As-Built drawings - Include a statement on the drawings indicating the method used to verify the allowable design capacity of the piles (load tests or PDA).

A1010 STANDARD FOUNDATIONS

A1010 1.1 SHEETING AND SHORING

Provide sheeting and shoring as required. Sheeting and shoring plans shall be signed by the Contractor’s Geotechnical Engineer.

A1010 1.2 TERMITE CONTROL

A1010 1.2.1 Termite Control Barrier System

Formulate and apply termiticide in accordance with the manufacturer's label directions. The termiticide label shall bear evidence of registration by the U.S. Environmental Protection Agency or appropriate requirements of the host country.

Apply termiticide to the soil that will be covered by or lie immediately adjacent to the building(s) and structure(s), providing a protective barrier against subterranean termites.

Maintain the Pest Management Maintenance Record, DD Form 1532-1 and submit the Pest Management Report, DD Form 1532 as required.

Applicator(s) shall be licensed or certified by the Federal government or the state or the host country, as applicable.

A1010 1.2.2 Warranty

Furnish a 3 year written warranty against infestations or reinfestation by subterranean termites of the buildings or building additions constructed under this contract. Perform annual inspections of the building(s) or building addition(s). If live subterranean termite infestation or subterranean termite damage is discovered during the warranty period, and building conditions have not been altered in the interim, the Contractor shall:

a. Perform treatment as necessary for elimination of subterranean termite infestation;

b. Repair damage caused by termite infestation;

c. Reinspect the building approximately 180 calendar days after the repair.

A1010 1.2.3 Visual Inspection Guide

To maintain resistance to termites, complete the system and do not disturb, penetrate or damage during the remaining contract time period. Provide Manufacturer’s Guidance for performing a visual assessment of the installed system to ensure the system provides the designed termite physical barrier.

A101001 WALL FOUNDATIONS

Provide foundation walls as required in accordance with the requirements of this section and other portions of this RFP.

A101002 COLUMN FOUNDATIONS AND PILE CAPS

Provide column foundations or pile caps and grade beams as required in accordance with the requirements of this section and other portions of this RFP.

A1020 SPECIAL FOUNDATIONS

A102001 PILE FOUNDATIONS

Where piles are required, design, install, and test piles (including sheet piles, as applicable) in accordance with UFC 1-200-01, except as noted otherwise. Provide piles in accordance with the requirements of the Contractor's Geotechnical Engineer, and the following paragraphs.

A102001 1.1 DRIVING EQUIPMENT

Install piles (including sheet piles, as applicable) to the required tip elevation and capacity with the appropriate equipment as recommended by the Contractor's Geotechnical Engineer. Pile hammer shall be of sufficient weight and energy to suitably install piles without damage.

Drive production piles with the same hammer, cap block, and cushion materials, and using the same operating conditions as test piles, including pre-augering and spudding.

Pile driving equipment shall match the equipment assumptions on which the pile driving formulae used to determine blow counts are based.

A102001 1.2 INSTALLATION TOLERANCES

Locate the center of pile butts not more than four horizontal inches from the location indicated at cutoff elevation. Manipulation of the piles is not permitted. In addition to the stated tolerances, the clear distance between the heads of piles and the edges of pile caps shall be a minimum of five inches.

Locate top of sheet piles at cutoff elevation within ½ inch horizontally and 2 inches vertical of the location indicated. Manipulation of the piles is not permitted.

A variation of not more than 2 percent from the vertical for plumb piles, or not more than 4 percent from the required angle for batter piles will be permitted.

A102001 1.3 MISLOCATED AND DAMAGED PILES

Remove and replace with new piles those piles that are damaged, mislocated, or installed out of alignment tolerance or provide additional piles, installed as directed by the Contractor's Geotechnical Engineer and approved by the Contracting Officer, at no additional cost to the Government.

A102001 1.4 PILE SPACING

For cast-in-place concrete or augercast piles, provide adequate distance, as determined by the Contractor's Geotechnical/Structural Engineer, between

freshly placed concrete and other pile installation operations to avoid damage to concrete.

A102001 1.5 COATED PILES

Handle treated or coated piles so as to protect the treatment or the coating. Repair damage or defects to treatment or coating.

A102002 CAISSONS

If required, provide caissons as required in accordance with the requirements of this section and other portions of this RFP.

A102003 UNDERPINNING

If required, underpin existing construction as required in accordance with the requirements of this section and other portions of this RFP.

A102004 DEWATERING

Dewater site for foundation construction as required by soil conditions and local subsurface and surface water, including rainfall, and considering any potential adverse impact on adjacent facilities, including settlement. Dewatering requirements and methods shall be established by the Contractor’s Geotechnical Engineer, based on his subsurface exploration and investigation.

A102005 RAFT FOUNDATIONS

If required, provide a raft foundation as required to achieve the requirements of this section and other portions of this RFP and as required by the Contractor’s Geotechnical Engineer.

A102006 PRESSURE INJECTED GROUTING

If required, pressure inject grout as required in accordance with the requirements of this section and other portions of this RFP.

A1030 SLAB ON GRADE

A103001 STANDARD SLAB ON GRADE

If allowed by site conditions and recommended by the Contractor-provided Geotechnical Engineer, provide standard concrete slab on grade to meet the required loading requirement in accordance with the requirements of this section and other portions of this RFP.

Floor slab on grade shall be designed and constructed in accordance with EM 1110-1-1904, *Settlement Analysis* and so that any settlement of the floor slab shall not result in harmful distortion of the floor, nor vertical misalignment of the floor with other building components (such as doorways and trenches), building utilities or with pile-supported building elements. If these above conditions cannot be met, provide a pile supported slab.

A103003 TRENCHES

Trenches shall be constructed of reinforced concrete with water proof joints and seals to prevent ground water infiltration.

A103004 PITS AND BASES

Pits and bases shall be constructed of reinforced concrete with water proof joints and seals to prevent ground water infiltration.

A103005 FOUNDATION DRAINAGE

A103005 1.1 PERIMETER FOUNDATION DRAINAGE

Perimeter drainage system shall be provided to remove water away from the foundation of the facility and to be deposited in the storm sewerage system of the site. Pipe for the foundation drainage system shall be of the type specified, shall be perforated, and shall be of a size sufficient to remove water from the foundation successfully. Provide one, or a combination of more than one, of the following types of pipe:

a. Corrugated Polyethelene (PE) Drainage Pipe: ASTM F 405, heavy duty, for pipe 3 to 6 inches in diameter inclusive; ASTM F 667 for pipe 8 to 24 inches in diameter. Fittings shall be manufacturer’s standard type and shall conform to the indicated specification.

b. Acrylonitrile-Butadiene-Styrene (ABS) Pipe: ASTM D 2751, with a maximum SDR of 35.

c. Polyvinyl Chloride (PVC) Pipe: ASTM F 758, Type PS 46, ASTM D 3034, or ASTM F 949 with a minimum pipe stiffness of 46 psi.

Installation shall include wrapping the pipe with filter fabric sock and careful bedding of the pipe with appropriate fill material to ensure that the pipe does not become filled with the bedding material.

A103090 OTHER SLAB ON GRADE

A103090 1.1 BLOCK OR BOARD PERIMETER INSULATION

Provide only thermal insulating materials recommended by manufacturer for perimeter insulation. Provide one of the board or block thermal insulations listed below conforming to the following standards:

a. Cellular Glass: ASTM C 552

b. Extruded Preformed Cellular Polystyrene: ASTM C 578

The thickness of insulation and thermal resistance value shall be sufficient to meet the applicable building code and energy budget for the facility.

-- End of Section --

SECTION A20

BASEMENT CONSTRUCTION
4/08

A20 GENERAL

A20 1.1 DESIGN GUIDANCE

Provide the design and installation in accordance with the following references. This Performance Technical Specification (PTS) adds clarification to the fundamental requirements contained in the following Government Standards. The general requirements of this PTS section are located in PTS Section Z10, *General Performance Technical Specification*.

A20 1.1.1 Government Standards

Unified Facilities Criteria (UFC)

UFC 3-100-10N, *Architecture*

UFC 3-220-01N, *Geotechnical Engineering Procedures for Foundation Design of Buildings and Structures*

UFC 3-300-10N, *Structural Engineering*

Unified Facilities Guide Specifications (UFGS)

UFGS Section 31 23 00.00 20, *Excavation and Fill*

A20 1.2 GENERAL REQUIREMENTS

A20 1.2.1 Required Specifications

The Designer of Record shall utilize the following UFGS Specifications for the project specification.

Section 31 23 00.00 20, *Excavation and Fill*

A20 1.2.2 Geotechnical Report

A20 1.2.2.1 Contractor-provided Geotechnical Engineer

If a Contractor-provided geotechnical engineer is required, he shall be experienced with soil conditions in the region where the project site is located. The geotechnical engineer shall evaluate the RFP data, obtain and evaluate all additional data as required to support the design and construction, and prepare a Geotechnical Report.

A20 1.2.2.2 Subsurface Soils Information

Subsurface soil information, if provided, is included for the contractor’s information only, and is not guaranteed to fully represent all subsurface conditions. The data included in this RFP are intended for proposal preparation and preliminary design only. Contractor shall perform, at his expense, such subsurface exploration, investigation, testing, and analysis as his Designer of Record deems necessary for the design and construction of the foundation system.

All work by the Contractor-provided Geotechnical Engineer at the project location, if required, shall be coordinated with the Contracting Officer and shall not interfere with normal base operations. Prior to the Foundation Work Design submittal include a Contractor Geotechnical Report (an Adobe Acrobat PDF version on CD and two printed copies) for review and record keeping purposes. The report shall become the property of the Government. Geotechnical reports generated during construction, such as pile driving results and analysis, shall be provided to the Contracting Officer (an Adobe Acrobat PDF version and two printed copies) for record keeping purposes.

A20 1.2.2.3 Contractor-Provided Geotechnical Report

If required, submit a written Geotechnical report based upon Government-provided subsurface investigation data and all additional field and laboratory testing accomplished at the discretion of the Contractor's Geotechnical Engineer. The Geotechnical Report shall include the following:

a. The project site description, vicinity map and site map.

b. Results of all the field and laboratory testing, whether Government or Contractor-provided.

c. Engineering analysis, discussion and recommendations addressing:

d. Settlement

e. Bearing Capacity

f. Foundation selection and construction considerations (shallow, deep, special); dimensions, and installation procedures.

g. Site preparation (earthwork procedures and equipment), compaction requirements, building slab preparation (as applicable), soil sensitivity to weather and equipment, and groundwater influence on construction

h. Sheeting and shoring considerations, as applicable

i. Pavement design parameters, actual or assumed, including recommended thicknesses and materials, be for design or for proposed modifications to the RFP provided pavement design only

j. Haul routes and stockpile locations for earthwork, as applicable

k. Calculations to support conclusions and recommendations

l. Recommendations shall be presented on a structure-by-structure basis

The Geotechnical Report shall be signed by a registered Geotechnical Engineer.

The submitted report shall be accomplished by a cover letter identifying any recommendations of the report proposed to be adopted into the design which are interpreted by the Contractor as either conflicting with or being modifications to the Geotechnical or Pavement related requirements of the RFP.

A20 1.2.2.4 Geotechnical Site Data required in Design Drawings

The Contractor's final design drawings shall include the Government-provided subsurface data presented in the RFP as noted below, as well as any additional borings and laboratory test result data performed by the Contractor.

a. Logs of Borings and related summary of laboratory test results and groundwater observations.

b. The locations of all borings shall be indicated on the drawings. The applicable design drawings shall be revised to reference the Contractor's Geotechnical Report as being a basis for design.

A20 1.3 PERFORMANCE VERIFICATION AND ACCEPTANCE TESTING

Verification of satisfactory construction and system performance of the basement shall be via Performance Verification Testing, and by field inspection, as detailed in this section of the RFP.

A20 1.3.1 Earthwork

Perform quality assurance for earthwork in accordance with IBC Chapter 17 and UFGS Section 31 23 00.00 20. If a registered Professional Engineer is required to provide inspection of excavations and soil/groundwater conditions throughout construction, the Engineer shall be responsible for performing pre-construction and periodic site visits throughout construction to assess site conditions. The Engineer, with the concurrence of the contractor and the Contracting Officer, shall update the excavation, sheeting, shoring, and dewatering plans as construction progresses to reflect actual site conditions and shall submit the updated plan and a written report (with professional stamp) at least monthly informing the Contractor and the Contracting Officer of the status of the plan and an accounting of Contractor adherence to the plan; specifically addressing any present or potential problems. The Engineer shall be available to meet with the Contracting Officer at any time throughout the contract duration. The contractor shall bear all costs of the Engineer.

A20 1.4 DESIGN SUBMITTALS

Design Submittals shall be in accordance with Z10, *General Performance Technical Specifications*, UFGSS section 01 33 10.05 20, *Design Submittal Procedures,* UFC 1-300-09N, *Design Procedures,* UFC 3-300-10N, *Structural Engineering,* and UFC 3-220-01N, *Geotechnical Engineering...Structures*.

In addition, UFGS sections listed below or in the body of the PTS text are to be used by the Designer of Record (DOR) as a part of the design submittal. If the UFGS products or systems are applicable to the project, the DOR shall edit these referenced UFGS sections and submit them as a part of the design submittal specification. Edit the specification sections in accordance with the limitations stated in PTS section Z10, *General Performance Technical Specifications*.

UFGS 31 23 00.00 20 (02315N), *Excavation and Fill*

A20 1.5 CONSTRUCTION SUBMITTALS

Submit construction submittals in accordance with PTS Section Z10, *General Performance Technical Specifications.* In addition to the Z10 requirements,

the Designer of Record (DOR) shall approve the following submittals as a minimum:

Contractor-provided geotechnical report

Controlled fill or backfill material tests

A2010 BASEMENT EXCAVATION

A201001 EXCAVATION FOR BASEMENTS

Excavate for the basement as required in accordance with the requirements of this section and other portions of this RFP.

A201002 STRUCTURE BACKFILL AND COMPACTION

Provide backfill and soil compaction as required in accordance with the requirements of this section and other portions of this RFP.

A201003 SHORING

Provide shoring and sheeting as required in accordance with the requirements of this section and other portions of this RFP. Shoring and sheeting plans shall be signed by the Contractor’s Geotechnical/Structural Engineer.

A2020 BASEMENT WALLS

A202001 BASEMENT WALL CONSTRUCTION

Provide basement walls as required in accordance with the requirements of this section and other portions of this RFP.

A202002 MOISTURE PROTECTION

A202002 1.1 BUILT-UP BITUMINOUS WATERPROOFING

A202002 1.1.1 Environmental Conditions

Apply the primers and waterproofing specified herein when the ambient temperature is above 40 degrees F.

A202002 1.1.2 Liquid Asphalt

Deliver bulk liquid asphalt in fully insulated, heated transport tanker vehicles with circulating pump devices. Maintain the temperature of the liquid asphalt between 400 and 450 degrees F during storage, provided the transport and storage time does not exceed 12 hours. If the transport and storage time exceeds 12 hours, lower the temperature to between 300 and 325 degrees F at the time the 12 hours are exceeded. Liquid asphalt shall be used within 36 hours after loading in the transport tanker.

A202002 1.1.3 Materials

a. Bitumen - Asphalt; ASTM D 449, Type I.

b. Bituminous Plastic Cement - ASTM D 4586, Type I for asphalt.

c. Membrane Fabric

The following requirements shall apply:

Felt or Fabric Material	Saturant or Impregnant	Specification
Glass (felt) mat	Asphalt	ASTM D 2178, Type III
Reinforcing glass fabric	Asphalt	ASTM D 1668, Type I

d. Nails - Galvanized roofing nails.

e. Primer - ASTM D 41 for asphalt.

f. Protection Board -

ASTM D 517, plain, asphalt plank; ASTM C 208, construction grade building board, 1/2 inch thick, asphalt saturated or coated; ASTM C 726, 7/16 inch thick, covered on one side with waterproof paper or asphalt-saturated felt.

A202002 1.2 ELASTOMERIC SHEET WATERPROOFING

A202002 1.2.1 Environmental Conditions

Do not apply waterproofing during inclement weather or when there is ice, frost, surface moisture, or visible dampness on the surface to receive waterproofing and when ambient and surface temperatures are 40 degrees F or below. The restriction on the application of waterproofing materials when ambient and surface temperatures are below 40 degrees F will be waived if the Contractor devises a means, approved by the Contracting Officer, of maintaining the surface and ambient temperatures above 40 degrees F.

A202002 1.2.2 Butyl Rubber Sheeting

Not less than 60 mils minimum thickness.

A202002 1.2.2.1 Butyl Rubber Sheeting Performance Requirements

a. Thickness Tolerance, ASTM D 412: Plus or minus 10 percent;

b. Specific Gravity, ASTM D 297: 1.20, plus or minus 0.05;

c. Tensile Strength, ASTM D 412: 1200 psi minimum;

d. Tensile Stress at 300 percent elongation, ASTM D 412: 600 psi minimum;

e. Elongation, ASTM D 412: 300 percent minimum;

f. Tear Resistance, Die C, ASTM D 624: 125 pound force per inch (lbf/inch) minimum;

g. Shore A Hardness, ASTM D 2240: Five-second interval before reading; 60 plus or minus 10;

h. Ozone Resistance, ASTM D 1149: No cracks, 7 days - 50 pphm - 100 degrees F, 20 percent elongation;

i. Heating Aging-Accelerated, ASTM D 573: Tensile retention, 60 percent of minimum original elongation retention; 60 percent of minimum original requirement; 7 days, 240 degrees F.

j. Butyl Identification, ASTM D 471, Tricresyl Phosphate Immersion: Maximum volume swell 10 percent, 70 hrs, 212 degrees F;

k. Low Temperature Flexibility, ASTM D 746: No failure at -40 degrees F;

l. Water Absorption, ASTM D 471: +1 percent maximum. 7 days, 158 degrees F;

m. Exposure to Fungi and Bacteria in Soil, Minimum 16 Weeks: Unaffected; and

n. Water Vapor Transmission, 80 Degrees F Permeance, ASTM E 96, Procedure B or BW: 0.15 perms maximum.

A202002 1.2.2.2 Adhesive, Cement, and Tape for Use with Butyl Rubber

Provide as recommended by the butyl rubber waterproofing membrane manufacturer.

A202002 1.2.3 Composite, Self-Adhering Membrane Sheeting

Cold applied composite sheet consisting of rubberized asphalt and cross laminated, high-density polyethylene film. Not less than 60 mils minimum thickness is required.

A202002 1.2.3.1 Composite, Self-Adhering Sheeting Performance Requirements

a. Tensile Strength, ASTM D 412, Die C: 250 psi minimum;

b. Ultimate Elongation, ASTM D 412, Die C: 200 percent minimum;

c. Water Vapor Transmission, ASTM E 96 80 Degrees F Permeance, Procedure B: 0.1 perm maximum;

d. Pliability Degrees F, ASTM D 146: (180 Degrees Bend Over One Inch Mandrel): No cracks at minus -25 degrees F;

e. Cycling Over Crack at Minus 15 Degrees F: Membrane is applied and rolled across two primed concrete blocks with no separation between blocks. Crack opened and closed from zero to 1/4 inch. No effect at 100 cycles;

f. Puncture Resistance, ASTM E 154: 40 lb. minimum;

g. Lap Adhesion at Minimum Application Temperature, ASTM D1876 Modified, 5 lbs/in.(880 N/m);

h. Peel Strength, ASTM D 903: Modified, 9 lbs/in;

i. Resistance to Hydrostatic Head, ASTM D 5385: 231 ft of water

j. Water Absorption, ASTM D 570; 0.1% maximum.

A202002 1.2.3.2 Primer

Asphalt composition, ASTM D 41, or synthetic polymer in solvent as recommended by the membrane manufacturer.

A202002 1.2.3.3 Mastic

Polymer modified asphalt in suitable solvent of trowel-grade consistency and as recommended by the membrane manufacturer.

A202002 1.2.4 Protection Board

Three-dimensional, high impact resistant polymeric grid with woven monofilament drainage fabric bonded to the grid.

A202003 BASEMENT WALL INSULATION

A202003 1.1 BLOCK OR BOARD INSULATION

Provide only thermal insulating materials recommended by manufacturer for the indicated application. Provide one of the board or block thermal insulations listed below conforming to the following standards:

a. Cellular Glass: ASTM C 552

b. Extruded Preformed Cellular Polystyrene: ASTM C 578

c. Unfaced Preformed Rigid Polyurethane and Polyisocyanurate Board: ASTM C 591

d. Faced Rigid Cellular Polyisocyanurate and Polyurethane Insulation: ASTM C 1289

e. Type I Aluminum Foil on both major surfaces. Class 1 - Non-reinforced core foam.

A202003 1.2 BLANKET INSULATION

ASTM C 665, Type I, blankets without membrane coverings; with a thermal resistance value, which will be sufficient to meet the applicable building code and energy budget for the facility. The insulation material shall not contain asbestos materials.

A202003 1.2.1 Recycled Materials

Provide Thermal Insulation containing recycled materials to the extent practicable, provided the material meets all other requirements of this section. The minimum required recycled materials content by weight are:

Rock Wool: 75 percent slag

Fiberglass: 20 to 25 percent glass cullet

A202004 INTERIOR SKIN

Comply with Section C30, *Interior Finishes*.

-- End of Section --

SECTION B10

SUPERSTRUCTURE
4/08

B10 GENERAL

B10 1.1 DESIGN GUIDANCE

Provide the design and installation in accordance with the following references. This Performance Technical Specification (PTS) adds clarification to the fundamental requirements contained in the following Government Standards. The general requirements of this PTS section are located in PTS Section Z10, *General Performance Technical Specification*.

B10 1.1.1 Government Standards

Unified Facilities Criteria (UFC)

UFC 3-100-10N, *Architecture*

UFC 3-300-10N, *Structural Engineering*

B10 1.2 PERFORMANCE VERIFICATION AND ACCEPTANCE TESTING

Verification of satisfactory construction and system performance shall be via Performance Verification Testing, as detailed in this section of the RFP. Provide special tests and special inspections in accordance with UFGS Section 01 45 00.05 20, *Design and Construction Quality Control.*

B10 1.3 DESIGN SUBMITTALS

Design submittals shall be in accordance with Z10, *General Performance Technical Specifications,* UFGS section 01 33 10.05 20, *Design Submittal Procedures,* UFC 1-300-09N, *Design Procedures,* UFC 3-100-10N, *Architecture,* and UFC 3-300-10N, *Structural Engineering.*

B10 1.4 CONSTRUCTION SUBMITTALS

Submit construction submittals in accordance with PTS Section Z10, *General Performance Technical Specifications.* In addition to the Z10 requirements, the Designer of Record (DOR) shall approve the following submittals as a minimum:

All structural elements necessary for construction of the superstructure.

B1010 FLOOR CONSTRUCTION

B101001 STRUCTURAL FRAME

Structural frame elements may include columns, girders, beams, trusses, joists, moment frames, shear walls, and bracing. See Section B20, *Exterior Enclosure*, for additional requirements for exterior walls used as load-bearing walls or shear walls.

B101002 STRUCTURAL INTERIOR WALLS

Provide structural interior walls as required in accordance with the requirements of this section and other portions of this RFP. See Section C10, *Interior Construction*, for additional requirements.

B101003 FLOOR DECKS AND SLABS

If required, provide floor decks as required in accordance with the requirements of this section and other portions of this RFP.

B101005 BALCONY CONSTRUCTION

Design and construct exterior balconies to drain and with the top of the balcony high-point below the interior floor elevation as required for flashing.

B101006 RAMPS

Provide ramps as required in accordance with the requirements of this section and other portions of this RFP.

B101007 FLOOR RACEWAY SYSTEMS

See Section D50, *Electrical*, for floor raceway systems.

B1020 ROOF CONSTRUCTION

B102001 STRUCTURAL FRAME

Structural frame elements may include columns, girders, beams, trusses, joists, moment frames, shear walls, and bracing. See Section B20, *Exterior Enclosure*, for additional requirements for exterior walls used as load-bearing walls or shear walls.

B102002 STRUCTURAL INTERIOR WALLS

Provide structural interior walls as required in accordance with the requirements of this section and other portions of this RFP. See Section C10, *Interior Construction*, for additional requirements.

B102003 ROOF DECKS AND SLABS

Provide roof deck as required in accordance with the requirements of this section and other portions of this RFP.

B102004 CANOPIES

Provide canopies as required in accordance with the requirements of this section and other portions of this RFP.

-- End of Section --

SECTION B20

EXTERIOR ENCLOSURE
4/08

B20 GENERAL

B20 1.1 DESIGN GUIDANCE

Provide the design and installation in accordance with the following references. This Performance Technical Specification (PTS) adds clarification to the fundamental requirements contained in the following Government Standards. The general requirements of this PTS section are located in PTS Section Z10, *General Performance Technical Specification*.

Industry standards, codes, and Government standards referenced in the section text that are **not** found in the Unified Master Reference List (UMRL) in the Construction Criteria Base (CCB) at the Whole Building Design Guide Website, are listed below for basic designation identification. Comply with the required and advisory portions of the current edition of the referenced standard at the time of contract award.

B20 1.1.1 Industry Standards and Codes

NATIONAL LUMBER GRADES AUTHORITY (NLGA)

AMERICAN CONCRETE INSTITUTE (ACI)

AMERICAN SOCIETY OF HEATING, REFRIGERATING, AND AIR-CONDITIONING

ENGINEERS (ASHRAE)

AMERICAN SOCIETY OF CIVIL ENGINEERS (ASCE)

AMERICAN SOCIETY FOR TESTING AND MATERIALS (ASTM)

ASCE -7, “Minimum Design Loads for Buildings and Other Structures”

AMERICAN WELDING SOCIETY (AWS)

BUILDERS HARDWARE MANUFACTURER’S ASSOCIATION (BHMA)

EXTERIOR INSULATION MANUFACTURER’S ASSOCIATION (EIMA)

MASTER PAINT INSTITUTE (MPI)

B20 1.1.2 Government Standards

Military Handbook 1013/1A, *Design Guidance for Physical Security of Facilities*

UNIFIED FACILITIES GUIDE SPECIFICATIONS (UFGS)

UNIFIED FACILITIES CRITERIA (UFC)

UFC 1-200-01, “General Building Design”

UFC 1-300-09N, “Design Procedures”

UFC 3-100-10, “Architecture”

UFC 3-300-10N, “General Structural Requirements”

UFC 3-310-01, “Structural Load Data”

UFC 4-010-01, “DoD Minimum Antiterrorism Standards for Buildings”

MRACS – Marianas Region Architectural & Construction Standards

All exterior enclosure walls and other enclosure elements shall be designed to resist structural forces resulting from seismic and wind, whether or not the enclosure elements are part of the building structural load-carrying and load-resisting system.

B20 1.2 PERFORMANCE VERIFICATION AND ACCEPTANCE TESTING

Verification of satisfactory exterior enclosure system performance shall be via Performance Verification Testing, and by field inspection as detailed in this section of the RFP. Provide special tests and special inspections in accordance with UFGS Section 01 45 00.05 20, *Design and Construction Quality Control.* The Contractor shall pay the cost of all testing.

B20 1.2.1 Required Records for Concrete Wall Panels

a. Cast-in-place - Submit to DOR mandatory batch ticket information as ASTM C 94 for each load of ready-mixed concrete.

b. Submit to DOR commercial testing results in accordance with PCI MNL-117 and as required in paragraph entitled "Sampling and Testing for Precast."

B20 1.2.2 Precast Concrete Wall Panel Surface Finish Sample

Submit to DOR a concrete wall panel sample 12 inches (300 mm) by 12 inches (300 mm) by approximately 1 1/2 inches (38 mm) in thickness, to illustrate quality, color, and texture of both exposed-to-view surface finish and finish of panel surfaces that will be concealed by other construction. Obtain initial approval of color and texture from DOR prior to submission of sample panels.

B20 1.2.2.1 Manufacturing Plant Sampling And Testing for Precast Concrete

Plant Quality Control - PCI MNL-117 for PCI enrolled plants. Where panels are manufactured by specialists in plants not currently enrolled in the PCI "Quality Control Program," provide a product quality control system in accordance with PCI MNL-117 and perform concrete and aggregate quality control testing using an approved, independent commercial testing laboratory. Submit test results to the Contracting Officer.

a. Aggregate Tests: ASTM C 33. Perform one test for each aggregate size, including determination of the specific gravity.

b. Strength Tests: ASTM C 172. Provide ASTM C 39 and ASTM C 31/C 31M compression tests. Perform ASTM C 143 slump tests. Mold six cylinders each day or for every 20 cubic yards (15 cubic meters) of concrete placed, whichever is greater. Perform strength tests using two cylinders at 7 days and two at 28 days. Cure four cylinders in the same manner as the panels and place at the point where the poorest curing conditions are offered. Moist cure two cylinders and test at 28 days.

c. Changes in Proportions: If, the compressive strength falls below that specified, adjust the mix proportions and water content and make necessary changes in the temperature, moisture, and curing procedures to secure the specified strength. Notify the Contracting Officer of all changes.

d. Strength Test Results: Evaluate compression test results at 28 days in accordance with ACI 214 using a coefficient of variation of 20 percent. Evaluate the strength of concrete by averaging the test results (two specimens) of standard cylinders tested at 28 days. Not more than 20 percent of the individual tests shall have an average compressive strength less than the specified ultimate compressive strength.

B20 1.2.2.2 Acceptable Appearance

Refer to *Architectural Precast Concrete* by the Prestressed Concrete Institute, in the “Acceptability of Appearance” paragraph for reasons to reject precast panels. Panels in place may be rejected for any one of the product defects or installation deficiencies remaining after repairs and cleaning have been accomplished. "Visible" means visible to a person with normal eyesight when viewed from a distance of 20 feet (6 meters) in broad daylight.

B20 1.2.3 Window Sample Mock-Up

a. Provide mock up of one (1) typical combination window unit to be used within the project and conduct a field mock-up test in strict compliance with AAMA 502 method A and method B. Each opening will be tested to achieve performance of ASCE 7-02 calculated requirements (PSF or Kg/m2) for water resistance, which shall not exceed .667 % of the products capable water based on AAMA 101/I.S. 2. Allowable rates of air leakage for field testing shall be 1.5 times applicable AAMA 101/I.S.2 rate for the Product Type and Performance Class.

b. Opening is to be tested under “Quality Control” testing by a designated independent testing agency.

1) Schedule mock up installation sufficiently in advance of need to allow adequate time for cure of sealants, testing and reconstruction, if needed, without delaying the project.

2) Build mock up in building envelope wall in location selected by Owner and Architect.

3) Modify mock up construction and perform additional tests as required to achieve specified minimum acceptable results. If corrections are not adequate, construct new mock up, at written direction of Owner and Architect. Co-ordinate construction of mock up with other involved trades.

4) Approved mock ups may become part of completed Work if undisturbed at time of Substantial Completion.

5) Flood test Mockup window sub-sill and obtain approval of DOR prior to installing window unit.

B20 1.2.4 Curtain Wall Systems Field Sample and Testing

a. At the job site submit for approval by the Designer of Record, a sample curtain wall installation which may be a cut-away portion of a curtain wall, if appropriate, to show the construction, the workmanship, tie-in to building, infiltration and moisture barriers, wrap, flashing, head, window unit installation where required, sill, lintel if required, interior and exterior trim, anchors and reinforcing, and sealants.

b. Provide mock up of (1) designated Curtain Wall System unit to be used in conducting a field mock-up test in strict compliance with AAMA 503 method A and method B. Each opening will be tested to achieve performance of ASCE 7-05 calculated requirements (PSF or Kg/m2) for water resistance, which shall not exceed the derived water expectation of 0 infiltration at the calculated Design Pressure. Allowable rates of air leakage for field testing shall be .30 CFM/Ft2 of wall area test specimen. Performance test at 6.24 PSF (30.3 Kg/m2) allows .30 cfm/ft2. Opening is to be tested under “Quality Control” testing by a designated independent testing agency.

1) Schedule mock up installation sufficiently in advance of need to allow adequate time for cure of sealants, testing and reconstruction, if needed, without delaying the project.

2) Build mock up in building envelope wall in location selected by DOR.

3) Modify mock up construction and perform additional tests as required to achieve specified minimum acceptable results. If corrections are not adequate, construct new mock up, at written direction of DOR. Co-ordinate construction of mock up with other involved trades.

4) Approved mock ups may become part of completed Work if undisturbed at time of Substantial Completion.

The sample curtain wall shall be protected from damage and shall remain at the site until curtain wall construction work is complete and approved, at which time the panel shall be removed from the site. On projects where the curtain wall interfaces with masonry walls, a cut-away sample curtain wall shall be installed with the masonry sample panel. Curtain wall installations shall match the approved sample.

Water Penetration: No water penetration shall occur when the wall is tested in accordance with ASTM E 331 at a differential static test pressure of 20 percent of the inward acting design wind pressure as specified, but not less than 15 psf (80 Kg/m2). Make provision in the wall construction for adequate drainage to the outside of water leakage or condensation that occurs within the outer face of the wall. Leave drainage and weep openings in members and wall open during test.

B20 1.3 DESIGN SUBMITTALS

Design submittals shall be in accordance with Z10, *General Performance Technical Specifications*, UFGS section 01 33 10.05 20, *Design Submittal Procedures,* UFC 1-300-09N, *Design Procedures,* UFC 3-100-10N, *Architecture* and UFC 3-300-10N, *Structural Engineering*.

In addition, UFGS sections listed below or in the body of the PTS text are to be used by the Designer of Record (DOR) as a part of the design submittal. If the UFGS products or systems are applicable to the project, the DOR shall edit these referenced UFGS sections and submit them as a part of the design submittal specification. Edit the specification sections in accordance with the limitations stated in PTS section Z10, *General Performance Technical Specifications*.

B20 1.4 CONSTRUCTION SUBMITTALS

Submit construction submittals in accordance with PTS Section Z10, General Performance Technical Specifications. In addition to the Z10 requirements, the Designer of Record (DOR) shall approve the following submittals as a minimum;

Shop drawings for reinforcing steel in masonry walls, doors, door hardware, windows, storefront, curtain wall, glazing, paint, and visible exterior materials.

All structural elements necessary for construction.

Submit the following in accordance with Section 01 33 00.05 20, “Construction Submittal Procedure”:

Submit the following in accordance with Section 01 33 00.05 20,“Construction Submittal Procedures”:

SD-2 Shop Drawings

Windows; G

Doors and Frames: Provide a schedule of doors and frames and complete details; G

Door hardware schedule; G

Reinforcing steel; Precast concrete wall panels; Movement joints; G

Aluminum Gate; G

Screened Equipment Enclosure; G

Storm Shutters; G

EFS System; G

SD-03 Product Data

Windows; G

Doors and frames; G

Door Hardware; G

Wall Louvers; G

Movement joints; G

Insulation, Vapor Retarder, Air Barrier, Sealants; G

Wall Framing; G

Screen Doors and panels; G

Storm Shutters; G

EFS components; G

Paints and coatings; G

SD-04 Samples

Exterior wall finishes, including mortar color; G

Exterior glazing materials; G

SD-05 Design Data

Window Pressure Calculations; G

Concrete Mix Design;

Calculations; G

SD-06 Test Reports

Aggregates;

Concrete Compressive strength tests;

Concrete mix design;

SD-07 Certificates

Concrete products;

SD-08 Manufacturer’s Instructions

Installation instructions for the following products: Windows; G

Doors and frames; G

Precast concrete wall panels;

Movement joints; G

Wall louvers; G

Storm shutters; G

SD-10 Operations and Maintenance Data

Doors and frames; G

Door hardware schedule; G

Windows; G

Exterior Finish System; G

Storm Shutters; G

B20 1.4.1 Manufacturer's Verification Inspection Documentation for Galvanized Steel

Manufacturer's verification inspection documentation shall be submitted for all galvanized steel in accordance with ASTM A123, ASTM A 153, and ASTM A 653.

B20 1.4.2 Field Inspection of Field-erected Concrete Panels

a. Perform field inspection of panel welded connections. Furnish the services of AWS-certified welding inspector for erection inspections. Welding inspector shall visually inspect all welds and identify all defective welds.

b. The DOR shall be notified in writing of defective welds, bolts, nuts and washers within 7 working days of the date of inspection. All defective connections or welds shall be removed and re-welded or repaired as required by the DOR.

B2010 EXTERIOR WALLS

Provide solid grouted reinforced concrete masonry unit, solid reinforced concrete or solid precast reinforced concrete exterior walls with interior skin system materials to provide protective finish on inside face of exterior walls. Complete wall system shall have a minimum insulating value as required by building code and as required to meet energy budget for building.

Provide flashing, window subsill, caulking, and water barriers around wall openings to direct any water that gets behind the outside surface of the exterior door, window or louver to the exterior of the wall.

All work shall be designed to comply with UFC 3-100-10N, *Architecture*, and UFC 3-300-10N, *Structural Engineering*, and the following requirements:

a. Vapor Transmission Analysis - Perform a job specific vapor transmission analysis in accordance with UFC 3-100-10N, *Architecture*. The conclusion of the analysis shall indicate the appropriate locations of needed vapor retarders, air barriers, and anticipated dew-point locations in the exterior enclosure during different critical times of the year.

b. Maximum Air Infiltration - The maximum allowable air leakage for any material used as part of the air barrier system for the opaque enclosure shall be 0.004 cfm / sf at 1.57 psf (0.02 L/s/M²

[liters/second per square meter] at 75 Pa pressure), as tested according to ASTM E 2178 test protocol.

c. Wind Loads - Provide wind load calculations for exterior cladding in accordance with UFC 1-200-01 and UFC 3-310-01 with comparative analysis of the cladding system to be provided.

d. Water Penetration - No water penetration shall occur at a pressure of 8 psf (39 Kg/m^2) of fixed area when tested in accordance with ASTM E 331.

e. Insulating Value – The complete wall system shall have a minimum insulating value as required by the building code and as required to meet ASHRAE Standard 90.1 as modified by the Energy Policy Act of 2005.

B201001 EXTERIOR CLOSURE

B201001 1.1 STUCCO EXTERIOR WALL CLOSURE

B201001 1.1.1 Portland Cement Plaster

ASTM C150, gray Portland cement Type II with 1/2 inch (13 mm) maximum chopped alkali resistant fiberglass strands, minimum 1.5 percent by weight to cement; 1 1/2 pounds (.68 kg) per sack of cement. Lime shall conform to ASTM C206, Type S. System shall utilize stainless steel or zinc corner beads, J-beads and other accessories.

a. Unless specifically deleted, the system shall utilize an acrylic admixture or coating to give additional moisture suppression to control fungus growth.

b. Sand for Portland Cement Stucco ASTM C 144, except gradation of sand shall conform to the following requirements:

c. Sand Gradation for Basecoats:

Percentage Retained by weight (plus or minus 2 percent) on each sieve

Sieve Size	Min.	Max.
No. 4	0	0
No. 8	0	10
No. 16	10	40
No. 30	30	65
No. 50	70	90
No. 100	95	100

d. Sand for Finish Coats: Natural color and graded within the limits shown above for basecoats, except that the sand shall pass the No. 8 sieve, and for smooth finish the sand shall pass the No. 30 sieve.

e. Mix scratch coat in proportion of one part by volume Portland cement, 3/4 to 1 1/2 parts by volume hydrated lime and 2 1/2 to 4 parts sand (volume of sand per sum of cement and lime). Mix brown coat in proportion of one part by volume Portland cement, 3/4 to 1

1/2 parts by volume hydrated lime and 3 to 5 parts sand (volume of sand per sum of cement and lime). Mix proportions can vary depending on climate and application variations, with the approval of the DOR.

f. Portland Cement Stucco Finish Coat 3 to 5 parts sand (volume of sand per sum of cement and lime).

g. Portland cement plaster application shall be in accordance with ASTM C 926. Furring and lath application shall be in accordance with ASTM C 1063.

h. Bonding Agents: ASTM C 932. Provide for exterior applications to masonry or concrete substrates.

B201001 1.2 EXTERIOR FINISH SYSTEM (EFS)

The exterior finish system (EFS) shall be a job fabricated exterior wall covering consisting of reinforced fabric, base coat, finish coat, and adhesive as applicable. EFS shall have silicon enhanced finish coat and added mildewcide if mildewcide additive is allowed by EFS manufacturer. Mildew resistance shall be in accordance with ASTM D 3273. The system components shall be compatible with each other and with substrate as recommended or approved by, and the products of, a single manufacturer regularly engaged in furnishing EFS. All EFS and sealant that come in contact with EFS materials shall be installed by an applicator approved by the EFS manufacturer. EFS shall be class PB and shall be color as selected. The Contractor’s EFS Subcontractor shall also provide and install all sealants that come in contact with EFS. Contractor is to follow EFS manufacturer’s details and all specifications dealing with EFS. Sealants and contract document EFS details, EFS sealant details, EFS in contact with flashing, EFS penetration details, details for hanging objects on EFS, etc. shall be reviewed and approved by the EFS manufacturer. The EFS manufacturer is to provide a factory trained EFS inspector to do weekly inspections of the EFS installation so that a 10 year EFS warranty will be issued. The EFS manufacturer and the EFS manufacturer’s inspector shall approve all penetrations, through the EFS. No penetration should occur after the EFS are installed. If penetrations do occur after EFS are installed, the Contractor is to notify the Contracting Officer and the EFS inspector for inspecting these additional penetrations. A complete inspection of the exterior envelope must be done to make sure that envelope is sealed to prevent moisture intrusion that will cause condensation and potential mold grow. An area of penetration concerns in EFS is the dryer vents, other vents, conduits, etc.

Test system for wind load by uniform static pressure in accordance with ASTM E 330 (procedure A) to a minimum pressure as determined for wind pressure as calculated in accordance with ASCE 7, Exposure D, 76 m/s(170 mph), Importance Factor 1.0. There shall be no permanent deformation, delamination or other deterioration. Class PB EFS shall not be used in first floor, high traffic areas, or in areas where pedestrians congregate without at least one layer of 567 grams (20ounce) reinforcing fabric mesh. Provide 4 mm (1/8 inch) minimum thickness for class PB EFS finish system. Furnish manufacturer’s standard warranty for the EFS. Warranty shall run directly to Government and cover a period of not less than 10 years from date Government accepted work.

B201001 1.2.1 EFS System Components

B201001 1.2.1 – Base Coat: Manufacturer’s standard product and compatible with other systems components.

B201001 1.2.2 – Portland Cement: Conform to ASTM C 150, Type I or II as required, fresh and free of lumps, and approved by the systems manufacturer.

B201001 1.2.3 – Reinforcing Fabric: Reinforcing fabric mesh shall be alkali-resistant, balanced, open weave, glass fiber fabric made from twisted multi-end strands specifically treated for compatibility with the other system materials, comply with EIMATM 105.01 and as recommended by EFS manufacturer.

B20101 1.2.4 – Finish Coat: Manufacturer’s standard product conforming to the requirements in the paragraph on Sub-Component Requirements and Tests. For color consistency, use materials from the same batch or lot number. Finish texture shall be smooth.

B201001 1.3 CONCRETE EXTERIOR WALL CLOSURE

B201001 1.3.1 Precast Concrete Wall Panels:

ACI 211.1 and ACI 301. PCI MNL-116 or PCI MNL-117. Concrete shall have a minimum 28-day compressive strength of 4000 psi (281 Kg/cm^2). Air content of plastic concrete shall be between 4 and 6 percent air by volume. Provide a dosage of air entraining agent, which will produce 19 plus or minus 3 percent air in a 1 to 4 by weight standard sand mortar in accordance ASTM C 185. Provide aggregate in accordance with ASTM C 33. Design for watertight joints, or weeping joints having back-up water penetration protection in precast elements. Cracking potential of precast concrete elements shall be minimized by implementing expansion and control joints in the precast assembly.

Joints shall include properly sized and placed backing material and fully loaded and tooled sealant joint of no less than 1/4 inch sealant material thickness.

a. Exposed Aggregates - In addition to the above aggregate, facing mixture aggregate, and aggregate for homogeneous panels with exposed aggregate finish, shall be crushed stone.

b. Cement - ASTM C 150.

c. Admixtures - ASTM C 260 for air-entraining admixtures. Other admixtures: ASTM C 494. Certify that admixtures are free of chlorides.

d. Reinforcement - ACI 301.

e. Inserts - ASTM A 47, Grade 32510 or 35018, or may be medium strength cast steel conforming to ASTM A 27/A 27M, Grade U-60-30. Where exposed to moisture, provide inserts hot-dip galvanized after fabrication in accordance with ASTM A 153/A 153M.

f. Embedded Plates - ASTM A 36/A 36.

g. Flashing Reglets - Fabricate of sheet metal, open-type with continuous groove 1 1/8 inches (28 mm) deep minimum by 3/16 inch (5 mm) wide at opening and sloped upward at 45 degrees. Top surface shall have toothed lip section to anchor upturned edge of metal snap-lock counter flashing when inserted. Sheet metal shall be stainless steel, 0.011 inch (0.28 mm) minimum thickness, ASTM A 167, Type 302 or Type 304, Number 2D finish, soft temper.

h. Clip Angles - ASTM A 36/A 36M steel, galvanized after fabrication in accordance with ASTM A 153/A 153M.

i. Ferrous Casting Clamps - ASTM A 47, Grade 32510 or Grade 35018 malleable iron or cast steel, or ASTM A 27/A 27M, Grade U-60-30, cast steel casting, hot-dip galvanized in accordance with ASTM A 153/A 153M.

j. Threaded Fasteners – Provide galvanized machine bolts, washers and, when required, nuts.

1) Bolts: ASTM A 449, 3/4 inch (19 mm) diameter machine bolts with hexagon head.

2) Washers: ANSI B18.21.1, medium or heavy lock-spring washers.

3) Nuts: ASTM A 563, Grade C, heavy, hexagon-type nuts.

4) Square Nuts: ASTM A 563, Grade A, plain.

k. Water – Fresh, clean, and potable.

B201001 1.3.1.1 -Form Materials

Provide forms and form-facing materials of wood, metal, plastic, or other approved material to produce concrete having the specified finish.

B201001 1.3.1.2 -Sampling And Testing for Precast

B201001 1.3.1.2.1 -Product Quality Control

PCI MNL-117 for PCI enrolled plants. Where panels are manufactured by specialists in plants not currently enrolled in the PCI "Quality Control Program," provide a product quality control system in accordance with PCI MNL-117 and perform concrete and aggregate quality control testing using an approved, independent commercial testing laboratory. Submit test results to the Contracting Officer.

a. Aggregate Tests: ASTM C 33. Perform one test for each aggregate size, including determination of the specific gravity.

b. Strength Tests: ASTM C 172. Provide ASTM C 39 and ASTM C 31/C 31Mcompression tests. Perform ASTM C 143 slump tests. Mold six cylinders each day or for every 15 cubic meters (20 cubic yards) of concrete placed, whichever is greater. Perform strength tests using two cylinders at 7 days and two at 28 days. Cure four

cylinders in the same manner as the panels and place at the point where the poorest curing conditions are offered. Moist cure two cylinders and test at 28 days.

c. Changes in Proportions: If, the compressive strength falls below that specified, adjust the mix proportions and water content and make necessary changes in the temperature, moisture, and curing procedures to secure the specified strength. Notify the Contracting Officer of all changes.

d. Strength Test Results: Evaluate compression test results at 28days in accordance with ACI 214 using a coefficient of variation of 20 percent. Evaluate the strength of concrete by averaging the test results (two specimens) of standard cylinders tested at 28 days. Not more than 20 percent of the individual tests shall have an average compressive strength less than the specified ultimate compressive strength.

B201001 1.3.1.3 –Rejection

Panels in place may be rejected for any one of the following product defects or installation deficiencies remaining after repairs and cleaning have been accomplished. "Visible" means visible to a person with normal eyesight when viewed from a distance of 6 meters (20 feet) in broad day light.

a. Nonconformance to specified tolerances.

b. Air voids (bug holes or blowholes) larger than 9 mm (3/8 inch) diameter.

c. Visible casting lines.

d. Visible form joints.

e. Visible irregularities.

f. Visible stains on panel surfaces.

g. Visible differences between panel and approved sample.

h. Visible non uniformity of textures or color.

i. Visible areas of backup concrete bleeding through the facing concrete.

j. Visible foreign material embedded in the face.

k. Visible repairs.

l. Visible reinforcement shadow lines.

m. Visible cracks.

n. Structural deficiencies.

B201001 1.3.1.4 -Field Quality Control

Perform field inspection of panel connections. The Contracting Officer shall be notified in writing of defective welds, bolts, nuts and washers within 7 working days of the date of inspection. All defective connections or welds shall be removed and re-welded or repaired as required by the Contracting Officer.

a. Welded Connection Visual Inspection: AWS D1.1, furnish the services of AWS-certified welding inspector for erection inspections. Welding inspector shall visually inspect all welds and identify all defective welds.

B201001 1.3.2 -Cast-In-Place/Tilt-Up Concrete Wall Panels:

ACI 211.1, ACI 301/301M, and ACI 318/318M and ACI 304.2R except as otherwise specified. The compressive strength (f'c) of the concrete for each portion of the structure(s) shall be in accordance with the code.

Design for watertight joints, or weeping joints having back-up water penetration protection in precast elements. Cracking potential of precast concrete elements shall be minimized by implementing expansion and control joints in the precast assembly.

Joints shall include properly sized and placed backing material and fully loaded and tooled sealant joint of no less than 6 millimeter sealant material thickness.

B201001 1.3.2.1 -Cement

ASTM C 150, or ASTM C 595.

B201001 1.3.2.2 -Water

Water shall be fresh, clean, and potable; free from injurious amounts of oils, acids, alkalis, salts, organic materials, or other substances deleterious to concrete.

B201001 1.3.2.3 -Aggregates

ASTM C 33. Furnish aggregates for exposed concrete surfaces from one source. Aggregates shall not contain any substance that may be deleteriously reactive with the alkalis in the cement.

B201001 1.3.2.4 -Air-Entraining

Air-entraining is not required.

B201001 1.3.2.5 -Reinforcing Bars

ACI 301/301M unless otherwise specified.

B201001 1.3.2.6 -Field Quality Control

a. Sampling: ASTM C 172. Collect samples of fresh concrete to perform tests specified. ASTM C 31/C 31M for making test specimens.

b. Slump Tests: ASTM C 143/C 143M. Take concrete samples during concrete placement. The maximum slump may be increased as specified with the addition of an approved admixture provided that the water-cement ratio is not exceeded. Perform tests at commencement of concrete placement, when test cylinders are made, and for each batch (minimum) or every 15cubic meters (20 cubic yards) maximum of concrete.

c. Temperature Tests: Test the concrete delivered and the concrete in the forms. Perform tests in hot or cold weather conditions (below 10degrees C (50 degrees F) and above 32 degrees C (90 degrees F)) for each batch (minimum) or every 15 cubic meters (20 cubic yards)(maximum) of concrete, until the specified temperature is obtained, and whenever test cylinders and slump tests are made.

d. Compressive Strength Tests: ASTM C 39. Make five test cylinders for each set of tests in accordance with ASTM C 31/C 31M. Precautions shall be taken to prevent evaporation and loss of water from the specimen. Test two cylinders at 7 days, two cylinders at 28 days, and hold one cylinder in reserve. Samples for strength tests of each building element of concrete placed each day shall be taken not less than once a day, nor less than once for each 76 cubic meters (100 cubic yards) of concrete, nor less than once for each 465 square meters (5000 square feet) of surface area for walls. For the entire project, take no less than five sets of samples and perform strength tests for each mix design of concrete placed. Each strength test result shall be the average of two cylinders from the same concrete sample tested at 28days. If the average of any three consecutive strength test results is less than f'c or if any strength test result falls below f'c by more than 3447 kPa (500 psi), take a minimum of three ASTM C 42/C 42M core samples from the in-place work represented by the low test cylinder results and test. Concrete represented by core test shall be considered structurally adequate if the average of three cores is equal to at least 85 percent of f'c and if no single core is less than 75 percent of f'c. Locations represented by erratic core strengths shall be retested. Remove concrete not meeting strength criteria and provide new acceptable concrete. Repair core holes with non shrink grout. Match color and finish of adjacent concrete.

B201001 1.4 CONCRETE WALL PANEL RESTORATION

Materials, physical and chemical properties, and composition of new concrete shall match that of existing concrete to be repaired, unless samples and testing determine that existing mixtures and materials are faulty or non-performing.

B201001 1.4.1 Existing Concrete Testing

Representative samples of existing concrete shall be taken from areas of the structure to be repaired at indicated locations. The samples

shall be taken in accordance with ASTM C 42 and ASTM C 823 and tested in accordance with ASTM C 39, ASTM C 42, ASTM C 295, ASTM C 457, ASTM C 856, ASTM C 1218/C 1218M, and ASTM C 642, ASTM C 114, and ASTM C 1084. Aggregates in the existing concrete shall be evaluated in accordance with ASTM C 136 and ASTM C 295. The air content of the existing concrete shall be determined in accordance with ASTM C 457 and ASTM C 642.

B201001 1.4.2 Admixtures

Air entraining admixtures shall conform to ASTM C 260, water-reducing or -retarding admixtures shall conform to ASTM C 494, and pigments for integrally colored concrete shall conform to ASTM C 979 and ASTM C 1017. Admixtures shall not contain added chlorides.

B201001 1.4.3 Aggregates

Aggregates shall conform to ASTM C 33.

B201001 1.4.4 Cement

Cement composition shall match that of cement used in existing concrete to be repaired as determined by samples and testing and shall conform to the basic requirements of ASTM C 150, Type I or II. Cement shall have non-shrink (shrinkage compensating) properties and shall conform to ASTM C 1107, Class B or C, expansive cement type.

B201001 1.4.5 Pozzolan

Pozzolan shall conform to ASTM C 618, Class F, including limit on available alkalis, "Table 2 - Supplementary Optional Chemical Requirements," and uniformity requirements, "Table 4 - Supplementary Optional Physical Requirements."

B201001 1.4.6 Epoxy Anchor Adhesives

An epoxy-resin grout shall be used to bond steel anchors to concrete, and shall be a 100 percent solids, moisture insensitive, low creep, and structural adhesive. The epoxy shall conform to ASTM C 881, type IV; grade and class selected to conform to the manufacturer's recommendations for the application. The epoxy adhesive shall be conditioned, proportioned, mixed, and applied in accordance with the manufacturer's recommendations, except as otherwise specified herein.

a. Epoxy-resin grout - Shall be a two-component material, 100 percent solids by weight, formulated to meet the requirements of ASTM C 881, Type I or II. Type I material shall be used when materials or atmospheric temperatures are 70 degrees F (21 degrees C) or above. Type II material shall be used when materials or atmospheric temperatures are below 70 degrees F (21 degrees C). Epoxy-resin grout shall have the ability to structurally rebond cracks, delaminations, and hollow plane conditions in concrete; shall be insensitive to the presence of water; and shall have the capability to penetrate cracks down to 5 mils in width. Materials shall have been used in similar conditions for a period of at least five years.

b. Epoxy Injection Ports - Injection ports for epoxy-resin grout shall be designed for the intended use as detailed in this section and shall be made according to the recommendation of the epoxy manufacturer.

B201001 1.5 OTHER EXTERIOR WALL CLOSURE

B201001 1.5.1 Glass Block

a. Glass block units shall be made of clear colorless glass. Units to have polyvinyl butyral edge coating. Units to have 75 percent light transmission allowance. System shall utilize ventilators and accessories recommended by glass block manufacturer. Glass block specified is manufactured by Pittsburgh Corning Corporation. The manufacturer's name and catalog identification are provided to describe physical characteristics and functional requirements of the product desired. Other manufacturers' products that are considered to be the functional equivalent will be acceptable.

b. Exterior Glass Block Units shall be DECORA, VUE, or ARGUS pattern. Units designated as "reflective glass block" shall have a highly reflective oxide surface coating of a gray color.

B201001 1.5.2 Concrete Unit Masonry

Masonry walls shall comply with ACI 530.1. Load-bearing units: ASTM C90, Non-load bearing- units: ASTM C129, Type I or II. Provide ground face units, split-faced units, ground-faced units, or split-ribbed units for exposed exterior walls. Provide water repellent admixture to masonry units where the exterior face of the units will not receive a waterproof coating such as paint. Mortar shall conform to ASTM C 270, Type S. Test mortar in accordance with ASTM C 780. Provide water repellent admixture and color additive in mortar for masonry walls that will not receive a waterproof coating such as paint. Do not use admixtures containing chlorides. Provide air entrainment, not to exceed 12 percent, in mortar.

a. Adjustable Anchors for Structural Members - Use adjustable anchors to anchor masonry structural steel columns or beams. Weld the fixed portion of the anchors (steel anchor rods) to the structural steel member. Provide adjustable anchors 3/16 inch (5 mm) diameter steel wire, triangular-shaped. Anchors attached to steel shall be 5/16 inch (8 mm) diameter steel bars placed to provide 1/16 inch (1.6 mm) play between flexible anchors and structural steel members.

b. Deformed Bars - ASTM A 615/A 615M, ASTM A 616/A 616M, ASTM A 617/A 617M, or ASTM A 706/A 706M.

B201002 EXTERIOR WALL CONSTRUCTION

B201002 1.1 CONCRETE UNIT MASONRY

Provide concrete unit masonry as described in **B201001 1.10.2**

Damp proofing – Damp proof the cavity-facing wythe of the backup masonry using asphaltic primer according to ASTM D 41, if damp proofing is not provided by a sprayed on foam or other DOR-approved membrane insulation system. Coordinate damp proofing materials and methods to provide vapor transmission control for the lifetime of the structure. Repair any damp proofing damaged by other construction operations.

B201002 1.2 CAST-IN-PLACE CONCRETE SYSTEM

a. Unless otherwise noted herein, all concrete design and construction must be in accordance with UFC 1-200-01.

b. Concrete construction must be in accordance with ACI 301.

c. Refer to Performance Verification Testing for Cast-in-place field quality control.

d. Concrete construction tolerances must be in accordance with ACI 117.

e. Design for watertight joints, or weeping joints having back-up water penetration protection in precast elements. Cracking potential of precast concrete elements shall be minimized by implementing expansion and control joints in the precast assembly.

f. Joints shall include properly sized and placed backing material and fully loaded and tooled sealant joint of no less than 1/4 inch sealant material thickness.

B201003 1.1 INSULATION SYSTEMS

Vertical and horizontal polystyrene insulation conforming to ASTM C578 or rigid polyisocyanurate board wall insulating products conforming to ASTM C591 or mineral-fiber blanket insulation conforming to ASTM C 665 shall be provided. Wall insulating product shall have a minimum R-value to meet the code and the energy design of the facility. Seal the joints in rigid insulation within cavity/veneer walls for additional moisture and air infiltration protection.

B201004 PARAPETS

Avoid parapets when possible, but when necessary, provide parapets with the same materials as the exterior wall construction, including framing members, anchors, flashings, cants, and accessories. Parapets shall be designed to withstand the lateral loads prevailing at the project site and be provided with thru wall flashing below the parapet cap, at structural members, at penetrations, and at the roof level. Provide flashing and scuppers in accordance with SMACNA.

B201005 EXTERIOR LOUVERS & SCREENS

If required, provide anodized aluminum louvers, which are not an integral part of the mechanical equipment, exterior closures, grilles and screens, storm shutters, and other materials used for a variety of purposes including screening of equipment or as louvers for exterior doors.

Louvers, screens, grilles in shall be selected in a color and design that is compatible with the fabric of the exterior architectural character as described below. For frame construction, install in accordance with ASTM E 2112.

B201005 1.1 WALL LOUVERS

Wall louvers shall be drainable blade type louver with blade slopes of 45 degrees minimum, but provide wind driven rain rated louvers for wall louvered rooms without a floor drain within the room. Louvers shall be made to withstand a wind load of not less than 90 psf (146 Kg/m^2), .08 inch (2 mm) thick 6063-T5 or T52 extruded aluminum in a factory-finished color in accordance with AAMA 2605 with a minimum coating thickness of 1.2 mil to match the building facade. Wall louvers shall bear the AMCA certified ratings program seal for air performance and water penetration in accordance with AMCA 500 , 500L (wind driven rain), and AMCA 511. Provide sill flashing with sloped drain pan at base of louver to collect moisture that migrates down the interior face of the louver. This sill flashing shall drain water to the outside of the building. Louvers shall have bird screens.

B201005 1.2 SCREENED EQUIPMENT ENCLOSURE

Design and fabricate support frames to withstand wind loads. Anchor frames securely in place. Provide secondary horizontal steel or aluminum framing for attachment of screen materials. Screen material shall be factory finished coating in accordance with AAMA 2605 with a minimum coating thickness of 1.2 mils. Formed metal panels from galvanized steel sheet per ASTM A 653 or aluminum sheet per ASTM B 209.

B201005 1.3 STORM SHUTTERS

Storm shutters shall be of anodized construction and be made to withstand minimum wind load of 90 PSF in accordance with ASCE 7 guidelines.

B201005 1.3.1 Roll Shutters

Roll shutters shall have factory finished 0.050 inch (1.27 mm), 6063-T5/T6 aluminum slats with continuous over-head housing, frame and tracks. Roll shutter shall be capable of being locked in a closed position by a non-key device.

B201005 1.3.2 Accordion Shutters

Accordion shutters shall have factory-finished aluminum alloy 6063-T5/T6 slats and tracks. Accordion shutter shall have stainless steel wheel carriers, nylon wheels and guides with stainless steel fasteners and be capable of being locked in a closed position by a non-key device.

B201005 1.3.3 Hinged Louvered Shutters

Hinged louvered shutters shall have factory finished 0.50 inch (13 mm), 6063-T5/T6 aluminum louvered blades and frames with stainless steel hinges, holders, and fasteners. Allow minimum space between horizontal

louver blades. Provide storm bar where required due to the lateral loads imposed on the shutter.

B201005 1.3.4 Removable Shutters

Removable shutters shall have formed factory finished 0.050 inch (1.27 mm), 3003-H16 aluminum panels and continuous 6063-T5/T6 header and base frame with stainless steel fasteners or spring tempered stainless steel clips.

B201005 1.3.5 Exterior Door Louvers

If allowed by UFC 4-010-01, louvers for exterior doors shall be inverted "Y" type with minimum of 30 percent net-free opening. Weld or tenon louver blades to continuous channel frame and weld assembly to door to form watertight assembly. Form louvers of hot-dip galvanized steel of same gage as door facings. Louvers shall have steel-framed insect screens secured to room side and readily removable. Louvers shall have aluminum wire cloth, 18 by 18 or 18 by 16 inch mesh, for insect screens. Net-free louver area to be before screening.

B201006 BALCONY WALLS & HANDRAILS

B201006 1.1 PRECAST CONCRETE BALCONY WALLS

Precast concrete balcony walls shall be in accordance with section B201001 EXTERIOR CLOSURE paragraph titled, “Precast Concrete Wall Panels.”

B201006 1.2 UNIT MASONRY BALCONY WALLS

B201006 1.2.1 Concrete Masonry Units

Concrete masonry balcony walls shall be in accordance with section B201001 EXTERIOR CLOSURE, paragraph titled, “Unit Masonry.”

B201006 1.3 HANDRAILS

Design handrails and anchorage connections to resist loads in accordance with IBC. Provide materials in accordance with NAAMM PR, with the same size handrail and vertical post. Provide series 300 stainless steel pipe collars. Factory coat all metal railings, except ornamental metals such as brass, bronze, and nickel-silver, with a high performance coating in accordance with AAMA 2605 with a minimum coating thickness of 1.2 mils unless otherwise noted.

B201006 1.3.1 Steel Handrails

Steel handrails, including inserts in concrete, steel pipe conforming to ASTM A 53 or structural tubing conforming to ASTM A 500, Grade A or B of equivalent strength shall be provided. Steel railings shall be of 1 1/2 inches (38 mm) nominal size. Railings shall be hot-dip galvanized, shop primed shop painted for exterior applications.

B201006 1.3.2 Aluminum Handrails

Aluminum railing shall be of 1-1/2 inch (38 mm) nominal schedule 40 pipe conforming to ASTM B 429 or 1-3/4 inch (44 mm) square aluminum semi-hollow tube with rounded corners conforming to ASTM B 221. Railings shall be coated with a high performance coating or anodized in accordance with AAMA 611, Class I. All fasteners shall be Series 300 stainless steel.

B201007 EXTERIOR SOFFITS

Exterior soffit system assemblies shall include trim and necessary accessories including high performance coatings, if required. Installation shall be crisp, fit and trim with tight joinery to back-up framing. Soffits shall be designed to be field assembled by lapping side edges of adjacent panels and mechanically attaching through panels to galvanized, non-load bearing framing conforming to ASTM A 653 (G60) and ASTM C 645, using concealed fasteners. Provide trim accessories of the same material and finish as the soffit material where soffit abuts other materials.

Use adequate backing material to assure snug joints and even face planes. Where soffits ventilate an attic space, or an otherwise unventilated space, provide a soffit/ridge/louver/ventilator ventilation system with air quantities complying to the IBC. For spaces intentionally not vented, provide sealed soffits to maintain the integrity of the air barrier and insulating envelope.

B201007 1.1 METAL SOFFIT PANELS

Metal soffit panels shall be factory-formed and factory-finished. Use factory-applied sealant in side laps

B201007 1.2 EXTERIOR GYPSUM BOARD SYSTEM

Exterior gypsum wall board soffit system shall be of fiber-reinforced cement board or glass mat gypsum sheathing board with tapered edge 5/8 inch (16 mm) thick, 48 inch (1.2 meter) wide exterior gypsum board panels conforming to ASTM C 931 and ASTM C 840, mechanically attached to galvanized non-load bearing framing conforming to ASTM A 653, G60 and ASTM C 754. Tape and finish gypsum board joints in accordance with ASTM C840. Soffit design shall assure that the gypsum soffit material does not have direct water contact.

B201008 WALL FLASHING

Flashing shall be aluminum or stainless steel or copper. Aluminum shall conform to ASTM B 209/B 209M, 0.040 inches (1.27 mm) thick and shall be coated to match the item flashed. Stainless steel shall conform to ASTM A 167, type 302 or 304, 2D finish, fully annealed, dead soft temper. Thickness shall be a minimum of 0.018 inches (0.4572 mm). Copper shall conform to ASTM B 370, cold rolled temper. Thickness of copper shall be 20 ounces per square foot (6.125 Kg/m^2).

B201009 EXTERIOR PAINTING AND SPECIAL COATINGS

B201009 1.1 GENERAL REQUIREMENTS

Painting practices shall comply with applicable federal, state and local laws enacted to insure compliance with Federal Clean Air Standards. Apply coating materials in accordance with SSPC PA 1. SSPC PA 1 methods are applicable to all substrates.

All paint shall be in accordance with the Master Painter Institute (MPI) standards for the exterior architectural surface being finished. The current MPI, "Approved Product List" which lists paint by brand, label, product name and product code as of the date of contract award, will be used to determine compliance with the submittal requirements of this specification. The Contractor may choose to use a more current MPI "Approved Product List"; however, only one list may be used for the entire contract. All coats on a particular substrate, or a paint system, must be from a single manufacturer. No variation from the MPI Approved Products List is acceptable.

MPI paint systems identified in the RFP take precedence over other MPI systems listed in the MPI literature. If the RFP does not identify a paint system applicable to all painting of the facility, utilize MPI tested systems listed in the MPI *Architectural Painting, Exterior System* manual to identify appropriate paint coatings. Utilize the “Detailed Performance Premium Grade” systems and comply with all limitations stated in the MPI “Approved Products List” for each system.

Remove dirt, splinters, loose particles, grease, oil, and other foreign matter and substances deleterious to coating performance as specified for each substrate before application of paint or surface treatments. For existing buildings, use *MPI Maintenance Repainting Manual* to determine the coatings that need to be removed. Remove deteriorated or loose coatings before repainting begins. Oil and grease shall be removed prior to mechanical cleaning. Cleaning shall be programmed so that dust and other contaminants will not fall on wet, newly painted surfaces. Exposed ferrous metals such as nail heads on or in contact with surfaces to be painted with water-thinned paints, shall be spot-primed with a suitable corrosion-inhibitive primer capable of preventing flash rusting and compatible with the coating specified for the adjacent areas.

B201009 1.1.1 MPI Gloss Levels

Gloss levels shall comply with the MPI system of determining gloss as defined in the Evaluation sections of the MPI Manuals. Utilize the performance characteristics of the paint gloss and sheen to categorize paint rather than manufacturers’ description of the product.

The MPI gloss Levels are indicated by the notation G1, G2, G3, G4, G5, G6, or G7. Use G2 “Velvet-like” flat for vertical surfaces and undersides of balconies and soffits. Use G3 “Eggshell-like” in high traffic areas for ceilings and walls, when a surface can be touched and a slightly more durable finish is desired, and for dark accent colors. Use G5 Semigloss for ceilings, walls, doors and trim for high durability and cleanability. Use G6 Gloss only in special situations such as for exterior wood and metal, piping identification, or special effects. The MPI gloss and sheen standard values are per ASTM D523, method D and are as follows:

Gloss Level Number	Gloss@ 60 Degrees Sheen@85 Degrees

Gloss Level 1**(G1)** – Matte or Flat	Max.5 units	Max.10 units
Gloss Level 2**(G2)**–"Velvet-like"Flat	Max. 10 units	10-35 units
Gloss Level 3**(G3)** – "Eggshell-like"	Max. 10-25 units	10-35 units
Gloss Level 4**(G4)** - "Satin-like"	Max. 20-35 units	Min. 35 units
Gloss Level 5**(G5)** - Semi-Gloss	35-70 units	
Gloss Level 6**(G6)** – Gloss	70-85 units	
Gloss Level 7**(G7)** – High Gloss	More than 85 units	

B201009 1.1.2 MPI System Designations and Table Abbreviations

The MPI coating system number description is found in either the *MPI Architectural Painting Specification Manual* or the *Maintenance Repainting Manual* and defined as an exterior system

a. EXT - MPI short-term designation for an exterior coating system on a new surface.

b. REX - the MPI short term designation for an exterior coating system used in repainting projects or over existing coating systems.

c. DSD - the MPI short-term designation for Degree of Surface Degradation as defined in the Assessment sections in the *MPI Maintenance Repainting Manual*. Degree of Surface Degradation designates the MPI Standard for description and appearance of existing condition of surfaces to be painted. This DSD classification is used to determine the proper surface preparation necessary for painting.

d. DFT – The short-term designation for dry film thickness. DFT is the minimum acceptable depth or thickness of a coating or system in the dry state. The maximum acceptable DFT is not more than 50% greater than the minimum acceptable DFT (example... DFT = 2 mils, maximum DFT = 3 mils). The DFT indicated in the paint systems below relate to new coatings - MPI INT. MPI RIN will be less than the indicated DFT.

e. Paint Systems Abbreviations: BF – block filler; C – clear coat; SP – spot primer ;P – primer coat; I – intermediate coat; T – topcoat; .

B201009 1.1.3 Surface Preparation

Comply with the "Exterior Surface Preparation" section of the *MPI Architectural Painting Specification Manual* or the Exterior Surface Preparation" section of the *MPI Maintenance Repainting Manual*. All suggestive language such as "may" or "should" are deleted from the standard and "must" or "shall" inserted in its place. Suggestive language such as "recommended" or "advisable" is deleted from the standard and "require" or "required" inserted in its place. The results of these wording substitutions change this document to required

procedures. For surface preparation, determine a MPI DSD Assessment of each surface and comply with the MPI Surface Preparation Requirements relating to the assessments.

B201009 1.2 EXTERIOR CONCRETE FINISHES

New and Existing, previously painted concrete, vertical surfaces, undersides of balconies and soffits, but excluding tops of slabs:

a. Latex, System DFT: 3.5 mils

1) MPI EXT 3.1K/ REX 3.1L-G2 (Flat)/; P: MPI 3, I: MPI 10, T: MPI 10

2) MPI EXT 3.1K/ REX 3.1L-G3/G4 (Low sheen); P: MPI 3, I: MPI 15, T: MPI 15

New and Existing, previously painted concrete floors, patios, and walkways with low contact and traffic. Not for high abuse, wheel traffic, or high humid area applications:

a. Latex, System DFT: 3.5 mils

1) MPI EXT/ REX 3.2A-G2/G3 (Low gloss); P: MPI 60, I: MPI 60, T: MPI 60

B201009 1.3 EXTERIOR CONCRETE MASONRY FINISHES

New and Existing, previously painted concrete masonry:

a. Latex, System DFT: 11 mils

1) MPI EXT/REX 4.2A-G2 (Flat); BF:MPI 4, P:MPI 10, I:MPI 10, T: MPI 10

2) MPI EXT 4.2A-G3/G4 (Low sheen) / REX 4.2-G5; BF:MPI 4, P:MPI 15, I: MPI 15, T: MPI 15

B201009 1.4 EXTERIOR METAL FINISHES

B201009 1.4.1 New Steel that has been hand or power tool cleaned to SSPC SP 2 or SP 3:

a. Alkyd, System DFT: 5.25 mils

1) MPI EXT 5.1Q-G5 (Semigloss)/REX 5.1D-G5; P:MPI 23, I:MPI 94, T:MPI 94

B201009 1.4.2 New Steel that has been blast cleaned to SSPC SP 6:

a. Alkyd, System DFT: 5.25 mils

1) MPI EXT/ REX 5.1D-G5 (Semigloss); P:MPI 79, I:MPI 94, T:MPI 94

B201009 1.4.3 New and existing steel that has been blast cleaned to SSPC SP 10:

a. Waterborne Light Industrial, System DFT: 8.5 mils

1) MPI EXT 5.1R-G5 (Semigloss); P:MPI 101, I:MPI 108, T:MPI 163

B201009 1.4.4 New Galvanized surfaces:

a. Epoxy P/Waterborne Light Industrial, System DFT: 4.5 mils

1) MPI EXT 5.3K-G5 (Semigloss); C:MPI 25, P:MPI 101, I:MPI 161, T:MPI 161

B201009 1.4.5 Galvanized surfaces with slight coating deterioration, with little or no rusting:

a. Epoxy P/Waterborne Light Industrial Coating, System DFT: 4.5 mils

1) MPI EXT 5.3K-G5 (Semigloss); C:MPI 25, P:MPI 101, I:N/A, T:MPI 163

B201009 1.4.6 Galvanized surfaces with severely deteriorated coating or rusting:

a. Epoxy P/Waterborne Light Industrial Coating, System DFT: 8.5 mils

1) MPI EXT 5.3K-G5 (Semigloss); C:MPI 25, P:MPI 101, I:MPI 163, T:MPI 163

B201009 1.5 EXTERIOR WOOD FINISHES

B201009 1.5.1 New and existing uncoated, dressed lumber or plywood, including backprime, top, bottom, and edges of doors not specified otherwise:

a. Alkyd, System DFT: 5 mils

1) MPI EXT 6.3B-G5 (Semigloss); P:MPI 7, I:MPI 94, T:MPI 94

b. Latex, System DFT: 5 mils (Not for human or abrasive contact areas)

1) MPI EXT 6.3A-G5 (Semigloss); P:MPI 7, I:MPI 11, T:MPI 11

B201009 1.5.2 Existing dressed lumber or plywood, including top, bottom, and edges of doors previously coated with an alkyd / oil based finish:

a. Alkyd, System DFT: 5 mils

1) MPI REX 6.3B-G5 (Semigloss); P:MPI 5, I:MPI 94, T:MPI 94

b. Latex, System DFT: 5 mils (Not for human or abrasive contact areas)

1) MPI REX 6.3A-G5 (Semigloss); P:MPI 5, I:MPI 11, T:MPI 11

B201009 1.5.3 Existing dressed lumber or plywood, including top, bottom, and edges of doors previously coated with an latex / waterborne finish:

a. Latex, System DFT: 4.5 mils

1) MPI REX 6.3L-G5 (Semigloss); P:MPI 6, I:MPI 11, T:MPI 11

B201009 1.5.4 New and existing dressed lumber or plywood, including stairs and decks:

a. Latex, System DFT: 4.5 mils(not for use in high traffic areas)

1) MPI REX 6.5A-G5/G6 (Low Gloss); P:MPI 5, I:MPI 60, T:MPI 60

B201009 1.6 EXTERIOR STUCCO FINISHES

B201009 1.6.1 New and existing stucco or plaster:

a. Latex, System DFT: 4.5 mils

1) MPI EXT/REX 9.1J-G3/G4 (Low sheen); P:MPI 3, I:MPI 15, T:MPI 15

2) MPI EXT/REX 9.1J-G5 (Semigloss); P:MPI 3, I:MPI 11, T:MPI 11

B201010 EXTERIOR JOINT SEALANT

Sealant joint design, priming, tooling, masking, cleaning and application shall be in accordance with the general requirements of *Sealants: A Professionals' Guide* from the Sealant, Waterproofing & Restoration Institute (SWRI). All sealant shall conform to ASTM C 920.

Joints shall include proper backing material for sealant support during application, control of sealant depth, and to act as a bond breaker. Use filler boards, backer rods and bond breaker tapes. Provide priming unless specifically not recommended by the sealant manufacturer. Applied sealant shall be tooled. Tooling shall not compact sealant too less than the minimum sealant thickness required. Mask adjacent surfaces to control sealant boundaries during sealant application.

B201011 SUN CONTROL DEVICES (EXTERIOR)

Sun control devices shall be manufactured devices to provide sun control on exterior windows and storefronts. Sun control devices shall be designed and installed to withstand the wind loads prevailing at the project site.

B201011 1.1 EXTERIOR SUN SCREENS

Exterior sun screens shall be of aluminum with 6063-T5/T6 aluminum demountable frame attachment. Screen material shall be formed factory finished metal from aluminum sheet per ASTM B 209. Screen material shall be factory finished coating in accordance with AAMA 2605 with a minimum coating thickness of 1.2 mils. Sunscreen shall be awning, fin or other type appropriate to the installation.

B201012 SCREEN WALL

Screen walls include attached or unattached walls adjacent to the main building. Screen walls shall conform to the applicable portions of Section B201001 EXTERIOR CLOSURE.

B201090 OTHER EXTERIOR WALLS

B2020 EXTERIOR WINDOWS

Standard windows shall be in compliance with ANSI/AAMA/WDMA 101, SWI SWS, UFC 4-010-01, and the design criteria of ASCE 7 for glazed windows to meet the Building Code.

If required, provide windows that meet the requirements of AAMA/WDMA 101/I.S.2. Windows shall comply with AAMA designation HC-60 (90 psf - 439 Kg/m^2) or meet anti-terrorism requirements, unless the wind pressure or blast pressure on the building exceeds the design pressure for these minimum windows. Determine the wind pressure on the building by converting the ASCE-7 basic wind speed to wind pressure and find the corresponding structural test pressure in the AAMA specific requirements or optional performance tables. Anti- Terrorism window systems (including connections) shall meet the testing requirements of UFC 4-010-01 when tested in accordance with ASTM F1642.

Comply with ASTM E 2112 and with flashing and weather-resistive barrier manufacturers’ recommendations to install windows in framed wall construction. Comply with window flashing details from BIA for masonry back-up and veneer walls. Engineer and install window cleaning access and anchorage to the exterior wall for facilities over three stories tall without interior window cleaning access from pivoting or tilting sash. Provide anchors in accordance with OSHA standard 29 CFR Section 1910.66.

Windows shall be provided with sills on the exterior and stools on the interior of the opening. Sills shall be special shape or cut unit masonry or precast concrete in masonry exterior construction and extruded aluminum or aluminum-wrapped wood framing or formed metal in other construction. Positively slope sills away from windows. Window stools shall be slate or solid polymer for commercial construction and painted wood for residential construction.

B202001 WINDOWS

Exterior windows shall consist of fixed and operable sash used singly and in multiples. Provide operable sash in spaces occupied by people as a minimum. Include operating hardware, non-corroding framed metal screens for operable sash, integrated blinds set between glass panels and security grilles. Provide jamb support for larger windows where recommended by manufacturer. Metal windows with insulating glass shall have thermally broken frames and sash.

Provide glazing in exterior windows in accordance with section B202004 EXTERIOR GLAZING.

B202001 1.1 STANDARD WINDOW SYSTEMS

B202001 1.1.1 Steel Windows

Conform to SWI SWS. Solid hot-rolled steel shape welded frames and mullions. Provide chemically cleaned and primed galvanized frames with polysteel powder coat finish. Provide glazing beads, steel frame screens with aluminum mesh at operable sashes, hardware and locks, and tinted glazing. Aluminum screens shall comply with ANSI/SMA 1004.

B202001 1.1.2 Aluminum Windows

Conform to ANSI/AAMA/WDMA 101. Factory finish aluminum windows and provide with aluminum frame screens with aluminum mesh at operable sash, hardware and locks, and tinted glazing. Aluminum screens shall comply with ANSI/SMA 1004.

Exposed aluminum surfaces shall be factory finished with an AA 45 anodic coating or an AAMA organic coating. Provide a minimum of architectural Class I anodized coating or a high-performance organic coating conforming to AAMA 2605. AAMA coatings shall have a total dry film thickness of 1.2 mils.

B202001 1.1.3 Security Windows

Security windows delay forced entry into the building through the windows. In addition to meeting the requirements of AAMA 101, windows designated “resistance to forced entry” shall conform to the requirements of AAMA 1302.

B202002 STOREFRONTS

Provide one-story storefront system fabricated from formed and extruded aluminum and glass components for exterior use.

B202002 1.1 ALUMINUM-FRAMED STOREFRONTS

B202002 1.1.1 Performance Requirements

a. Structural Requirements, as measured in accordance with ANSI/ASTM E330: Wind loads for exterior assemblies shall meet or exceed 90 psf (122 Kg/m2) acting inward and 90 psf (122 Kg/m2) acting outward. Design system to withstand this as a minimum and comply with design pressure established within the required ASCE 7-05 Wind Speed Calculations determined by the overall average opening within the project.

b. Deflection: Maximum calculated deflection of any framing member in direction normal to plane of wall when subjected to specified design pressures for spans up to and including 13’-6” shall be limited to 1/175 of its clear span and for spans greater than 13’-6” deflection shall be limited to 1/240 + 1/4” of its clear span, except that maximum deflection of members supporting plaster surfaces shall not exceed 1/360 of its span.

c. Air Infiltration - Air leakage through fixed light areas of storefront shall not exceed 0.06 cfm per square foot of surface area when tested in accordance with ASTM E283 at differential static pressure of 6.24 psf (33.84 Kg/m2).

d. Water Penetration - When tested in accordance with ASTM E 331, there shall be no water penetration at a pressure of 15 psf (73 Kg/m^2) of fixed area.

e. Water infiltration No uncontrolled leakage when tested in accordance with ASTM E331 at test pressure of 10 psf (48 Kg/m2) for system standard and capable of performing within the Design Pressure requirements derived from the ASCE 7-05 requirements.

B202002 1.1.2 Doors And Frames

Provide doors complete with frames, framing members, subframes, transoms, adjoining sidelights, adjoining window wall, trim, and accessories, as required for a complete installation. Anchors shall be stainless steel. Weather stripping shall be Continuous wool pile, silicone treated, or type recommended by door manufacturer. See B203008, EXTERIOR DOOR HARDWARE for hardware requirements.

B202002 1.1.3 Aluminum Alloy for Doors and Frames

ASTM B 221, Alloy 6063-T6 for extrusions. ASTM B 209, alloy and temper best suited for aluminum sheets and strips.

B202002 1.1.4 Fabrication

a. Aluminum Frames: Provide removable glass stops and glazing beads for frames accommodating fixed glass. Use countersunk stainless steel Phillips screws for exposed fastenings, and space not more than 12 inches (300 mm) o.c.. Mill joints in frame members to a hairline fit, reinforce, and secure mechanically.

b. Aluminum Doors: Doors shall be medium or wide stile. Doors shall be not less than 1-3/4 inches (44 mm) thick. Minimum wall thickness, 0.125 inch (3.175 mm), except beads and trim, 0.050 inch (1.27 mm). Bevel single-acting doors at lock, hinge, and meeting stile edges. Double-acting doors shall have rounded edges at hinge stile, lock stile, and meeting stile edges.

c. Finishes: Provide exposed aluminum surfaces with factory finish of anodic coating conforming to AA45, Architectural Class I or an organic coating conforming to AAMA 2605 with a total dry film thickness of not less than 1.2 mils.

B202003 EXTERIOR GLAZING

Provide setting and sealing materials, stops and gaskets as recommended by the glass or acrylic sheet manufacturer.

Provide warranty for insulating glass units for a period of 10 years against development of material obstruction to vision (such as dust or film formation on the inner glass surfaces) caused by failure of the hermetic seal, other than through glass breakage. The Contractor shall require the glazing warranty for curtain wall glazing to be written directly to the Government.

Provide warranty for polycarbonate sheet glazing for a period of 5-years against breakage, coating delamination, and yellowing.

Glazing thickness indicated in the following paragraphs is the minimum acceptable thickness. Provide thicker glazing if required by the manufacturer for the given application.

B202003 1.1 GLASS

B202003 1.1.1 Clear Glass

Type I, Class 1 (clear), Quality q4 (A).

B202003 1.1.2 Heat-Absorbing Glass

ASTM 1036, Type I, Class 2 (heat absorbing and light reducing), Quality q3 (select), 1/4 inch (6 mm) thick, with a light transmittance of approximately 45 percent and total solar transmittance of not more than 50 percent for 1/4 inch (6 mm) thickness. Use warm color tint for warm color frames and cool color tints for white and gray frames.

B202003 1.1.3 Wire Glass

Type II, Class 1, Form 1, Quality q8 Mesh m1 or Form 2, Quality q7, Finish f1, Mesh m1, 1/4 inch (6 mm) thick. Conform to NFPA 80. Glass for fire-rated windows shall be UL listed and shall be rated when tested in accordance with ASTM E 163.

B202003 1.1.4 Laminated Glass

ASTM 1172, fabricated from two pieces of Type I, Class 1, Quality q3 glass laminated together with a clear 0.030 inch (0.75 mm) thick polyvinyl butyral interlayer. The total thickness shall be nominally 1/4 inch (6 mm). Laminated glass used for anti-terrorism window assemblies must be a minimum of 1/4 inch (6 mm) thickness.

B202003 1.1.5 Insulating Glass Units

Insulating glass units shall have 1/2 inch (13 mm) airspace. Provide low emissivity coating. The inner light shall be one of the following:

a. Typically ASTM C 1036, Type I, Class 1, Quality q4, minimum 1/4 inch (6 mm) thick;

b. ASTM C 1048, Grade B (fully tempered), Style I (uncoated), Type I, Class 1 (transparent), Quality q4, minimum 1/4 inch (6 mm) thick when required by 16 CFR 1201 or possible glazing impact is anticipated;

c. ASTM C 1172, laminated glass as specified above, when required by antiterrorism requirements.

The outer light shall be one of the following:

a. Typically ASTM C 1036, Type I, Class 2 (tinted heat absorbing or reflective), Quality q4, minimum 1/4 inch (6 mm) thick;

b. ASTM C 1048, Grade B (fully tempered), Style I (uncoated), Type I, Class 2 (tinted heat absorbing or reflective), Quality q4, minimum 1/4 inch (6 mm) thick when required by 16 CFR 1201 or possible glazing impact is anticipated.

B202003 1.1.6 Tempered Glass

ASTM C 1048, Kind FT (fully tempered), Condition A (uncoated), Type I, Class 1 (transparent) or 2 (tinted heat absorbing, Quality q3, 1/4 inch (6 mm) thick.

B202003 1.1.7 Bullet-Resisting Glass

ASTM 1172 and UL 752, fabricated from Type I, Class 1, Quality q3 glass with polyvinyl butyral plastic interlayers between the layers of glass and listed by UL ABPMED as bullet resisting, with a power rating of Medium--Small Arms, High--Small Arms, Super--Small Arms, High—Rifle, or as required by the building program in accordance with UL 752.

B202003 1.1.8 Patterned Glass

ASTM 1036, Type II, Class 1 (translucent), Form 3 (patterned), Quality q7 (decorative), Finish f1 (patterned one side), Pattern p2 (geometric) 7/32 inch (5.55 mm) thick.

B202004 1.1.9 Spandrel Glass

ASTM C 1048, Kind HS or FT, Condition B (ceramic coated), Type I, Quality q5, 1/4 inch (6 mm) thick.

B202003 1.1.10 Spandrel Glass with Adhered Backing

ASTM C 1048, Kind HS or FT, Condition B (ceramic coated), Type I, Quality q5, 1/4 inch (6 mm) thick and shall pass the fallout resistance test specified in ASTM C 1048.

B202003 1.2 PLASTIC GLAZING

All plastic glazing exposed to the interior or exterior environment shall have an applied hardcoat.

B202003 1.2.1 Bullet-Resistant Plastic Sheet

Provide cast acrylic sheet or mar-resistant polycarbonate sheet laminated with a special interlayer, and listed in UL 752 as bullet resisting, Class I, II, III, clear, or in color.

B202003 1.2.2 Acrylic Sheet Glazing

ASTM D 4802, Type I, regular, Type II, heat resistant, in various thicknesses, clear or colored.

B202003 1.2.3 Polycarbonate Sheet Glazing

ASTM D 3595, ANSI Z97.1, Mar-resistant, Clear and smooth both sides when used for vision glazing; Translucent, textured both sides when

used for obscure glazing, tint to match frame, ultraviolet stabilized, thickness to be specified in mm and inches, and listed in UL ABPMED as burglar resisting. Mar-resistant sheet shall have a change in haze of between 5 and 8 percent under silica carbide test, 56.44 ounces (1600 grams), ASTM D 673.

B202003 1.3 FRAGMENT RETENTION FILM FOR GLAZING

Existing windows that will not be replaced in the project shall have fragment retention film if they require antiterrorism protection. The film shall be polyester, polyethylene terephthalate, or a composite. Fragment retention film shall be optically clear and free of waves, distortions, impurities, and adhesive lines. The film may be a single layer or laminated. Lamination of the film shall only occur at the factory of the fragment retention film manufacturer. The film shall include an abrasion resistant coating on the surface that does not receive the film adhesive. Fragment retention film shall be a minimum thickness of 0.004 inch (0.1016 mm), or 0.007 inch (0.1778 mm), or 0.010 inch (0.254 mm). The film shall be supplied with an optically clear weatherable pressure sensitive adhesive. The adhesive shall contain ultraviolet inhibitors to protect the film for its required life and shall limit ultraviolet transmission to not more than 8 percent of the radiation between 300 and 380 nanometers. The adhesive shall not be water activated. A water-soluble detackifier or release liner may be incorporated over the adhesive to facilitate film application. The adhesive shall be 90 percent cured within 30 days of installation. Adhesives on film thicknesses of 0.010 inch (0.254 mm) and greater shall be a minimum of 0.0008 inch (0.02032 mm) thick.

B202090 OTHER EXTERIOR WINDOWS

B202090 1.1 OPERABLE TRAY PASS WINDOWS

Frames and glass channels shall be of heavy type 6063-TS aluminum extrusions with reinforcing as required. Include bullet-resistant glazing and heavy-duty operable pass tray. Unit shall have a minimum of architectural Class I anodized coating or a high-performance organic coating conforming to AAMA 2605. AAMA coatings shall have a total dry film thickness of 1.2 mils.

B2030 EXTERIOR DOORS

Exterior doors shall be heavy duty insulated anodized aluminum doors and frames. Where required for security or fire resistance, provide heavy duty insulated steel doors and frames. Door frames shall be welded. Corner knockdown door frames are not permitted.

Use heavy-duty overhead holder and closer to protect doors from wind damage. Provide kickplates on the inside face of all exterior doors.

Weather-protect all exterior doors and related construction with low infiltration weatherstripping and sealants. Provide threshold with drop offset to stop water penetration while maintaining accessibility compliance.

Conform to the design criteria of ASCE 7.

See section B203008, EXTERIOR DOOR HARDWARE, for door hardware requirements. For all installations, provide a recessed key box (Knox Box) approximately 7 inches x 7 inches (175 mm x 175 mm) with 4-3/4 inches (120 mm) solid steel door at primary exterior entry for storage of keys and access cards accessible by the fire department.

B203001 SOLID DOORS

B203001 1.1 STEEL DOORS

Hardware preparation shall be in accordance with ANSI A250.6. Doors shall be hung in accordance with ANSI A115.16.

B203001 1.1.1 Steel Doors

Steel doors shall be ANSI A250.8, Level 4, exterior, main entry doors, with a physical performance level of, Model 1 or 2.

Doors may be specified to be insulated. Door selection shall be specified in the project program according to the following:

a. Standard Duty Doors - Level 1, physical performance Level C, Model [1] [2]

b. Heavy Duty Doors - physical performance Level B, Model [1] [2]

c. Extra Heavy Duty Doors – ANSI A250.8, Level 3, physical performance Level A, Model [1] [2] [3]

d. Maximum Duty Doors – ANSI A250.8, Level 4, physical performance Level A, Model [1] [2]

B203001 1.1.2 Insulation Cores

Insulated cores shall be of type specified, and provide an apparent U-factor of .48 in accordance with SDI 113 and shall conform to:

a) Rigid Polyurethane Foam: ASTM C591, Type 1 or 2, foamed-in-place or in board form, with oxygen index of not less than 22 percent when tested in accordance with ASTM D2863; or

b) Rigid Polystyrene Foam Board: ASTM C578, Type I or II; or

c) Mineral board: ASTM C612, Type I.

B203001 1.1.3 Accessories

a) Louvers shall comply with SDI 111-C, shall be stationary, sight-proof type. Use lightproof louvers if function of room requires darkness. Louver frames shall be 20-gage steel with louver blades minimum 24 gage.

b) Astragals: For pairs of exterior steel doors that will not have aluminum astragals or removable mullions, provide overlapping steel astragals with the doors.

c) Moldings: Provide moldings around glass of exterior doors and louvers. Provide non-removable moldings on outside of exterior doors. Secure inside moldings to stationary moldings, or provide snap-on moldings. Muntins shall interlock at intersections and shall be fitted and welded to stationary moldings.

B203001 1.1.4 Standard Steel Frames

ANSI A 250.8. Form frames with welded corners for installation in exterior walls. Form stops and beads of 20 gage steel. Frames shall be set in accordance with ASTM A250.11.

B203001 1.1.5 Anchors

Anchor all frames with a minimum of three jamb anchors and base steel anchors per frame, zinc-coated or painted with rust-inhibitive paint, not lighter than 18 gage. Mortar infill frames in masonry walls, and infill with gypsum board compound at each jamb anchor in metal frame walls. Only use surface exposed bolted anchors in concrete walls.

B203001 1.1.6 Finishes

a) Exterior Doors, Factory-Primed and Field Painted Finish - Doors and frames shall be factory primed with a rust inhibitive coating as specified in ANSI A250.8. Factory prime doors on six sides of the door. Manufacturer’s primer and field painting shall be compatible with finish system in the paragraph “EXTERIOR PAINTING AND SPECIAL COATINGS”.

b) Exterior Doors Galvanized Finish -- Shall be Commercial Quality, Coating Class A, zinc coating in accordance with ASTM A 591 when facility is located further than 300 feet (91 meters) from the ocean. When facility is located within 300 feet (91 meters) of the ocean, provide G60 galvanized coating in accordance with ASTM A 924/A 924M and ASTM A 653/A 653M.

B203002 GLAZED DOORS

B203002 1.1 ALUMINUM GLAZED DOORS

See B202002 STOREFRONTS, paragraph titled, “Doors and Frames.”

B203003 FIBERGLASS REINFORCED POLYESTER DOORS

Provide aluminum member heavy duty fiberglass reinforced polyester doors and aluminum frames. Weather-protect all exterior doors and related construction with low infiltration weather stripping and sealants. Provide recessed threshold to stop water penetration while maintaining accessibility compliance. Exterior entry doors shall be able to withstand dead and live loads caused by positive and negative pressure of 76 m/s (170 mph) winds for exposure D. As calculated in accordance with the International Building Code latest addition and ASCE 7 standards, which ever is more stringent. Provide separation barrier between door frames and concrete surfaces. All exposed and internal fasteners and hardware shall be stainless steel 316L. Doors

inside the garage are considered exteriors that must meet the above requirements. Conform to the design criteria of ASCE 7.

See Section B203003, DOOR HARDWARE, for door hardware requirements. Provide a recessed key box approximately 175 mm x 175 mm (7 inches x 7 inches) with 120mm (4-3/4 inches) solid steel door at primary exterior entry for storage of keys and/or access cards accessible by the fire department.

B203003 1.1.1 -FIBERGLASS REINFORCED POLYESTER DOOR SYSTEM

Provide internal aluminum member heavy duty fiberglass reinforced polyester doors and aluminum door frames for residential construction. Fiberglass reinforced polyester panels to be 3.18 mm (0.125 in), exterior grade, UV-protected and smooth texture on interior and exterior faces. The door core shall consist of pre-stabilized ISO-25 Class I polyisocyanurate foam or polyurethane foam. Door core shall be completely covered on interior and exterior sides of core with contiguous sheets of 0.81 mm (0.032 in) thick aluminum. Provide continuous hardware reinforcement with full internal perimeter aluminum tube. Doors shall be 44 mm (1-3/4 in) thick. Prepare doors to receive hardware. At main entry door to each unit, provide door viewer, one way vision, solid brass with chrome finish or stainless steel, multiple lens, optical glass with over 180 degrees viewing angle, and adjustable for thickness of door at eye level. Doors shall meet MRACS wind speed of 76 m/s(170 mph) for exposure D. Fiberglass reinforced polyester panels color to match Architectural Class I bronze finish except at main entry doors. Main entry doors to be provided in one of 3 custom colors in deep accent colors such as navy blue, maroon or forest green as approved by COMNAV Marianas Region Housing Office. Aluminum door frame at main entry doors shall be fluorocarbon coated finish to match fiberglass reinforced polyester panels. Other aluminum door frames shall have Architectural Class I bronze anodized finish. All exposed caps and trims on doors shall be provided in fluorocarbon coated finish to match fiberglass reinforced polyester panels.B203001 1.1.2 -Anchors Provide stainless steel anchors per frame, not lighter than 18 gage.

B203001 1.1.2.1 – Wall Anchors

Provide at least three anchors for each jamb or as recommended by the manufacturer. Anchoring system is to meet the MRACS wind speed 76 m/s (170mph) for exposure D and anchoring system is to be reviewed by the Contractor’s registered professional engineer, licensed to practice structural engineering in the United States of America or its territories.

B203004 OVERHEAD AND ROLL-UP DOORS

Large exterior overhead and roll-up doors system shall consist of manual or automatic exterior doors and door assemblies. Do not use roll-up doors on exterior walls of conditioned spaces.

B203004 1.1 ROLLING SERVICE DOORS AND GRILLES

Coiling overhead doors shall have minimum 22 gage thermal insulated slats. Electric operators shall have 3-button switches conforming to NEMA MG 1, NEMA ICS 1, and NEMA ICS 2, and auxiliary hand chain operation, weather-

stripping and wind-locks. Doors shall be capable of withstanding the design wind loading of ASCE 7 and still operate normally. Finish of the door shall be hot-dipped galvanized with a painted finish.

B203004 1.2 SECTIONAL OVERHEAD DOORS

Sectional overhead doors shall conform to NAGDM 102, Residential or Commercial or Industrial door standards. Metal doors shall be horizontal sections hinged together which operate in a system of tracks to completely close the door opening in the closed position and make the full width and height of the door opening available for use in the open position. Doors shall be of the standard lift type designed to slide up and back into a horizontal overhead position and requiring a maximum of 16 inches (400 mm) of headroom for 2 inch (50 mm) tracks and 21 inches (525 mm) of headroom for 3 inch (75 mm) tracks, unless a low headroom type is required due to limited headroom, or a high lift type or vertical lift type is required to allow additional working clearance in the area immediately inside the door. If doors are electrically operated, pushbuttons shall be full-guarded to prevent accidental operation, and include limit switches to automatically stop doors at the fully open and closed positions. Limit switch positions shall be readily adjustable.

Doors shall be capable of withstanding the design wind loading of ASCE 7. Doors shall remain operable and undamaged after conclusion of tests conducted in accordance with ASTM E 330 using the design wind load. Form door sections of hot-dipped galvanized steel not lighter than 16 gage with flush surface without ribs or grooves. Sections shall be not less than 2 inches (50 mm) in thickness. Insulate door sections with fibrous glass or plastic foam to provide a "U" factor of 0.14 or less when tested in accordance with ASTM C 236. Cover interior of door sections with steel sheets of not lighter than 24 gage to completely enclose the insulating material. Provide galvanized steel tracks not lighter than 14 gage for 2 inch (50 mm) tracks and not lighter than 12 gage for 3 inch (75 mm) track. Provide a positive locking device and cylinder lock with two keys on manually operated doors.

B203005 HANGAR DOORS

DOR utilize UFGS Specification Section 08 34 16.10, *Steel Sliding Hangar Doors*, or Specification Section 08 34 16.20, *Vertical Lift Fabric Doors,* for the project specification submittal for the project. Refer to the Project Program for which type of hanger door is used on this project.

B203006 EXTERIOR DOOR HARDWARE

Provide the services of an Architectural Hardware Consultant(AHC), Certified Door Consultant(CDC), or an Electrified Hardware Consultant(EHC) to assist the Designer of Record in preparation of the door hardware schedule and product selection. The hardware consultant shall sign and seal the door hardware construction submittal. Provide, as far as possible, door hardware of one manufacturer’s make. All hardware shall be clearly and permanently marked by the manufacturer where it will be visible after installation.

B203006 1.1 HINGES

BHMA A156.1, size to match door size, but in no case less than 4-1/2 x 4-1/2 inches (114 mm x 114 mm), with non-removable pin and anti-friction bearing hinges. Use two hinges for doors 60 inches (1500 mm) or less in height and one additional hinge for each additional 30 inches (750 mm), or fraction thereof, in door height.

B203006 1.2 PIVOTS

BHMA A156.4.

B203006 1.3 LOCKS AND LATCHES

Commercial (all construction except family housing) buildings locks and latches shall be BHMA A 156.13, Series 1000, Operational Grade 1, Security Grade 2 for exterior building entrances and other high-use doors not requiring exit devices. Use BHMA A 156.2, Series 4000, Grade 1 for all Commercial buildings locks and latches not using Series 1000 hardware.

For Residential (family housing) projects, use Series 4000, Grade 2 hardware.

B203006 1.3.1 Combination Locks for Sensitive Areas and Vault Doors

If required for exterior use, see C102007 1.1.6 “Combination Locks” for the specification. This installation may require special weather protection.

B203006 1.3.2 Pushbutton Combination Locks

Where required, provide a heavy-duty, mechanical combination lockset with 5 pushbuttons, standard-sized knob or lever, 3/4 inch (19 mm) deadlocking latch with 2-3/4 inch (70 mm) back-set. Provide deadbolt key override option. Safelock, Simplex, and Venn are acceptable manufacturers. Provide a hardware grade equivalent to Grade 1, series 4000. Include a 5-year parts and labor warranty.

B203006 1.4 CARD KEY SYSTEM

Where required, provide card key type access units. Provide lithium battery powered, magnetic stripe keycard locksets that are ANSI/BHMA A156.13, Series 1000, Grade 1, mortise or ANSI/BHMA A156.2, Series 4000, Grade 1, cylindrical locks, tamper resistant, UL listed with 1 inch (25 mm) throw deadbolt, 3/4-inch (19 mm) throw latch bolt, auxiliary deadlocking latch, and 2-3/4 inch (68.75 mm) backset. The latch bolt and the dead bolt shall be operated simultaneously by rotating inside lever. Locks with mechanical override lock cylinders are not acceptable. Locks shall be operated only by a correctly encoded keycard. Use of a newly issued keycard automatically re-keys the lock and voids the previous keycard. The lock shall re-lock immediately after outside lever is turned and latch retracted. Locks shall have memory that is capable of recording up to 140 entries into each room, identification of the keycard used to access the room, the date and time of entry. Entry information of the lock shall be retrievable by a data key that can be inserted into the lock and then taken to the front desk printer to display information. Other components that are required for this system at the front desk are a personal or laptop computer, printer and encoder to program each key.

For exit device locks with card key access, provide mortise type, narrow stile exit devices with 24 volt DC, solenoid option for card key exterior access at aluminum storefront doors. Provide mortise type exit devices with 24 volt DC, solenoid option with alarm and remote exterior access for card key access at insulated hollow metal doors. The alarmed exit device shall sound when exiting only.

System shall be capable of accepting a minimum of 12 keycard access levels, security auditing and computer interfacing with existing installations management system. Provide a single point of contact customer service representative accessible by telephone with a 10-digit telephone number without additional dialing hierarchies except that a maximum 4-digit extension is permissible. On-site service shall be provided within 3 hours from request within the first 12 months of occupancy. Provide a 5-year parts and labor warranty.

B203006 1.5 EXIT DEVICES

BHMA A 156.3, Grade 1. Provide on exit doors if it is anticipated that more than 50 people may use a particular door in an emergency exit situation. Touch bars shall be provided in lieu of conventional crossbars and arms. Use manufacturer’s integral touch bars in aluminum storefront doors.

B203006 1.6 EXIT LOCKS WITH ALARM

BHMA A 156.5.

B203006 1.7 CYLINDERS AND CORES

If required, provide cylinders and cores for new locks, including locks provided under other sections of this specification. Cylinders and cores shall have seven pin tumblers. Cylinders shall be products of one manufacturer, and cores shall be the products of one manufacturer. Rim cylinders, mortise cylinders, and knobs of bored locksets shall have interchangeable cores, which are removable by special control keys. Stamp each interchangeable core with a key control symbol in a concealed place on the core.

B203006 1.8 KEYING SYSTEM

Keying system shall be a master key system for the facility, unless more than one tenant/tenant command shall reside in a facility, or a grand master keying system, or great, grand master keying system if multiple tenants or buildings are required. The keying system shall be an extension of the existing keying system for additions to existing facilities. The keying system shall allow for construction interchangeable cores when subcontractors require keys during construction. If required, provide a key cabinet.

The Contractor shall coordinate a keying system meeting. The Contractor’s Project Manager, Superintendent, Hardware Subcontractor, Electrical Subcontractor (if keying hardware is electric), Designer of Record, Contracting Officer, Public Works Base Hardware Specialist, and the Using Activity shall attend this meeting to establish the keying system for the project. This meeting is intended to identify base limitations, the

necessary security, and access control within the facility. The meeting shall produce a marked up copy of the floor plan indicating the doors to receive locks and the doors to be keyed together, and any master keying or grand master keying.

B203006 1.9 KEYS

Furnish one file key, one duplicate key and one working key for each key exchange and for each master and grand master keying system.

B203006 1.10 LOCK TRIM

Cast, forged or heavy wrought construction and commercial plain in design.

B203006 1.10.1 Knobs and Roses

Knobs and roses shall meet test requirements of BHMA A 156.2 and BHMA A 156.13.

B203006 1.10.2 Lever Handles

Provide lever handles in lieu of knobs as required by UFAS and ADAAG. Lever handles shall meet the test requirements of BHMA A 156.13 for mortise locks. All lever handles (mortise or cylinder) shall be the freewheeling type.

B203006 1.11 DOOR BOLTS

BHMA A 156.16, Grade 1. Provide two flush bolts for each inactive leaf of a pair of doors.

B203006 1.12 CLOSERS6

BHMA A 156.4, Series C02000, Grade 1, with PT 4C, full size case. Provide closers for all exterior doors, fire-rated doors, corridor doors, stairway doors, and secure area doors, for non-residential (commercial) construction, as a minimum.

B203006 1.13 OVERHEAD HOLDERS

BHMA A 156.8, Grade 1. Provide for exterior doors for non-residential (commercial) construction.

B203006 1.14 DOOR PROTECTION PLATES

Kick plates shall conform to BHMA A 156.6. Provide kick plates on all doors with closers and all doors leading to corridors or circulation spaces. Provide armor plates on all doors to receive cart traffic. Provide mop plates on all doors in rooms with a mopable floor finish that do not have kick plates.

B203006 1.15 DOOR STOPS AND SILENCERS

BHMA A 156.16. Provide silencers, Type L03011, three per single door and four per double door, for doors in hollow metal frames.

B203006 1.16 THRESHOLDS

BHMA A 156.21. Provide thresholds with offset to stop water infiltration, while maintaining accessibility requirements.

B203006 1.17 WEATHERSTRIPPING

BHMA A 156.22. Air leakage of weatherstripped doors shall not exceed 0.5 CFM of air per square foot of door for residential doors, and 1.25 CFM for non-residential doors (unless a more restrictive infiltration level is specified).

B203006 1.18 RAIN DRIPS

For all exterior doors that open to the outside, where the door swing area is not covered by an overhang, provide top and bottom rain drips complying with ANSI R3Y535 as a minimum. Greater weathersealing may be required by the geographic location of the project.

B203006 1.19 FINISHES

One of the following hardware finish systems shall be provided, and match the interior door hardware:

a. BHMA A156.18. Hardware shall have BHMA 630 finish (satin stainless steel), unless specified otherwise. Provide items not manufactured in stainless steel in BHMA 626 finish (satin chromium plated) over brass or bronze, except surface door closers which shall have aluminum paint finish, and except steel hinges which shall have BHMA 652 finish (satin chromium plated). Hinges for exterior doors shall be stainless steel with BHMA 630 finish or chromium plated brass or bronze with BHMA 626 finish. Exit devices may be provided in BHMA 626 finish in lieu of BHMA 630 finish. Exposed parts of concealed closers shall have finish to match lock and door trim. Hardware for aluminum doors shall be finished to match the doors.

b. BHMA A156.18. Hardware shall have BHMA 612 finish (satin bronze), unless specified otherwise. Surface door closers shall have bronze paint finish. Steel hinges shall have BHMA 639 finish (satin bronze plated). Exposed parts of concealed closers shall have finish to match lock and door trim. Hardware for aluminum doors shall be finished to match the doors. Hardware showing on interior of bathrooms, shower rooms, toilet rooms, washrooms, laundry rooms, and kitchens shall have BHMA 629 finish (bright stainless steel) or BHMA 625 finish (bright chromium plated).

B203090 OTHER EXTERIOR SPECIALTY DOORS

Where required, provide special function exterior doors and gates and assemblies required for the proper operation and functioning of the facility. Exterior doors system may include factory-finished or painted doors and frames.

B203090 1.1 AUTOMATIC ENTRANCE DOORS

B203090 1.1.1 Automatic Swinging Entrance Door Controller

Automatic swinging entrance doors shall be glazed aluminum doors and frames as specified in this section. Controller shall be a dual function safety device that utilizes planar K-band microwave motion detectors and active infrared presence sensors at each door to protect individuals in the path of the swinging door. The planar K-band motion detector shall be capable of sensing an individual moving as slow as 2.2 inches (55.8 mm) per foot. The infrared sensors shall employ both diffused presence sensors that see through the plane of the door, and distance measuring sensors. The infrared sensors shall constantly remain in operation. The safety device shall call for reactivation or creep closing function, depending on the location of the sensor. If the sensor is located on the swing side, it will call for reactivation; if it is located on the pull side, it will call for creep closing function. Sensing system shall be fully adjustable with a universal remote control, and meet or exceed the requirements of ANSI A156.10. System shall include aluminum guard rails and signage for additional personnel safety.

B203090 1.1.2 Automatic Sliding Entrance Door Controller

Automatic sliding entrance doors shall be glazed aluminum doors and frames as specified in this section. Controller shall be a dual function safety device that utilizes planar K-band microwave motion detectors and focused active infrared presence sensors at each door to protect individuals in the path of the sliding door. The planar K-band motion detector shall be capable of sensing an individual moving as slow as 2.2 inches (55.8 mm) per foot. The focused active infrared sensors shall overlap their patterns for full coverage of the motion pattern and extend its range all the way to the floor surface. The infrared sensors shall constantly remain in operation even when the door is in the closing cycle. Door and frame shall have a “break-away’ feature that allows the door to be pushed open in an emergency exit situation.

-- End of Section --

SECTION B30

ROOFING
4/08

B30 GENERAL

B30 1.1 DESIGN GUIDANCE

Provide the design and installation in accordance with the following references. This Performance Technical Specification (PTS) adds clarification to the fundamental requirements contained in the following Government Standards. The general requirements of this PTS section are located in PTS Section Z10, *General Performance Technical Specification*.

Industry standards, codes, and Government standards that are referenced in the section text that are **not** found in the Unified Master Reference List (UMRL) in the Construction Criteria Base (CCB) at the Whole Building Design Guide Website are listed below for basic designation identification. Comply with the required and advisory portions of the current edition of the standard at the time of contract award.

B30 1.1.1 Government Standards

UNIFIED FACILITIES CRITERIA (UFC)

UFC 3-100-10N, *Architecture*

UFC 3-110-03, *Roofing*

UNIFIED FACILITIES GUIDE SPECIFICATIONS (UFGS)

B30 1.2 PERFORMANCE VERIFICATION AND ACCEPTANCE TESTING

Verification of satisfactory roofing system performance shall be via Performance Verification Testing, and by field inspection as detailed in this section of the RFP.

B30 1.2.1 Pre-Roofing Conference

Prior to beginning roofing work, the Contractor shall hold a Pre-Roofing Conference with the personnel directly responsible for the roofing systems work, as well as the roofing manufacturer’s technical representative. At this time the Contractor will address any conflicts between the proposed roofing system, the design documents, and the scheduling of work / workers (trades) to assure a watertight roofing installation. Resolutions will be obtained and documented in writing prior to the start of roofing work. A quality assurance/quality control plan shall also be established at this time, inclusive of the roofing manufacturer’s recommended testing and inspections procedures, and in accordance with industry standard guidelines.

Contractor shall provide the following additional information at the pre-roofing conference: Procedure for the roof manufacturer’s technical representative’s onsite inspection and acceptance of the

roofing substrate, roof insulation, and installation of the roofing in accordance with the roof system warranty, the name of the manufacturer's technical representatives, the frequency of the onsite visits, copies of the roof status reports from the technical representatives to the roof manufacturer, and pertinent structural details to the roofing system.

B30 1.2.2 Roof Design Assurance

If the roofing project is significant (Significant Roof – A single or group of buildings greater than 15,000 sf (1,400 m2)), or where extenuating circumstances of the roof project such as building use, content, safety, or visibility require a roofing consultant, the Contractor shall utilize the services of a Registered Roof Consultant (RRC) certified by the Roof Consultant Institute, or a Registered Professional architect or Engineer who specializes in roofing, to approve the roof design. The roof consultant must be engaged in roofing design and roofing construction as his primary endeavor. The roof consultant shall verify in writing that the design for the project is in accordance with the current edition of *NRCA Roofing and Waterproofing Manual*, UFC's, and RFP, and standard industry practices and building codes.

If a Roof Design Assurance Consultant is needed, consider using a Registered Roof Observer as a QC specialist in UFGS Section 01 45 00.05 20, *Design and Construction Quality Control*.

B30 1.2.3 Low Slope Roof Drain Test

Plug roof drains and fill with water to the edge of the drain sump for 24 hours. Not all drains shall be tested at one time. Measure water at the beginning and end of the 24 hour time period to ensure there is no leakage. Repeat testing until all leaks have been located, corrected, and no leaks found.

B30 1.2.4 Tests for Surface Dryness

Prior to application of roofing materials, perform surface dryness tests in presence of DOR. Asphalt of 350 to 400 degrees F (177 to 204 degrees C) shall not foam upon contact with substrate. After foaming test is performed, test for strippability (adherence).

B30 1.2.5 Quality Control Program

Contractor shall establish a quality control program to assure adherence to NRCA recommended Quality Control Guidelines for the Application of Roofing Systems and other specified application requirements. Compliance with UFGS Section 01 45 00.05 20, *Design and Construction Quality Control*, is required.

B30 1.3 DESIGN SUBMITTALS

Design submittals shall be in accordance with Z10, *General Performance Technical Specifications*, UFGS section 01 33 10.05 20, *Design Submittal Procedures,* UFC 1-300-09N, *Design Procedures* and UFC 3-100-10N, *Architecture*.

B30 1.4 CONSTRUCTION SUBMITTALS

Submit construction submittals in accordance with PTS Section Z10, *General Performance Technical Specifications*. In addition to the Z10 requirements, the Designer of Record (DOR) shall approve the following submittals as a minimum:

Test reports, color samples, certificates of conformance, warranties, close out documentation, and manufacturer's instructions for application and installation on all products used on the roof. Products used on the roof consist of but are not limited to structural deck, insulation, membrane or panels, Standing Seam Metal Roofing (SSMR), flashing, fasteners, nailers, and accessories.

B3010 ROOF COVERINGS

Roof coverings shall comply with the requirements of UFC 3-110-03, *Roofing*, and NRCA, *Roofing and Waterproofing Manual* found at http://www.nrca.net/rp/technical/manual/manual.aspx as the primary NAVFAC roofing criteria. Roof selection shall comply with UFC 3-330-02A, *Design: Commentary on Roof Systems*. Determine wind uplift using wind speed in accordance with ASCE-7.

Submit the INFORMATION CARD (see "Form 1" at the end of this section) Provide a typewritten card, laminated in plastic and framed in a weather-tight frame, or a photoengraved 0.032-inch (0.81 mm) thick aluminum card for the roof. This card shall be a minimum size of 8 1/2 x 11 inch (216 x 280 mm) and contain information listed in the attached Form 1. Install the card where directed. Furnish framed card and a duplicate card to the Designer of Record.

B301001 STEEP SLOPE ROOF SYSTEMS

Slope conversions from low slope to steep slope roofing systems must specifically address temporary waterproofing protection where new framing connections penetrate the existing low slope system.

B301001 1.1 ROOF TILES

Roof tiles shall be installed fully set in solid mortar bed with stainless steel screw fasteners on reinforced concrete roofs. Full strength cement bonding agent shall be applied on the concrete roof and tiles during installation.

B301001 1.1.1 Warranty

The contractor shall warrant for 30 years that the tile roofing system, as installed, is free from defects in workmanship.

B301001 1.1.2 Materials

a. Clay Tile - ASTM C 1167, machine-formed natural clay tiles, kiln-fired to vitrification and free from surface imperfections. Provide specially shaped units as required to provide watertight installation and closure. Form fastening holes prior to firing.

b. Concrete Tile - ASTM C 1492, molded or extruded, interlocking concrete roofing tile units, and specially shaped as required to provide a watertight installation and closure. Provide with cast-in anchor lugs, transverse weather checks and fastening holes.

B301001 1.1.3 - Fasteners

a. Materials for Installation of Tile - Nails shall be round-head, sharp point, 11 or 12 gauge, stainless steel ring shank roofing nails. Nail heads shall be low profile, smooth and flat. Shanks shall be barbed or otherwise deformed for added pull out resistance. Nails should be of sufficient length to penetrate one inch (25 mm) into mortar bed, with heads of sufficient size to prevent pullover of the tile.

B301001 1.1.4 Sheet Metal Flashing and Trim

Fabricate sheet metal flashing and trim of 20 oz. Copper, lead-coated copper or stainless steel to comply with SMACNA *Architectural Sheet Metal Manual*.

B301001 1.1.5 Mortar

ASTM C 270, Type M mortar mix.

B301001 1.1.6 Asphaltic Plastic Cement

ASTM D 4586.

B301002 LOW SLOPE ROOF SYSTEMS

B301002 1.1 GENERAL REQUIREMENTS

a. Warranty - Furnish the roofing system manufacturer’s materials and workmanship warranty for the roofing system. The warranty period shall not be less than 20 years from the date the Government acceptance of the work. The warranty shall be issued directly to the Government and shall not be limited in dollar value. The system warranty shall include roofing membrane, insulation, flashings, accessories and attachments.

b. Wind Uplift - The complete roof covering assembly shall be rated in accordance with FM P7825, capable of withstanding an uplift pressure as determined by ASCE-7, and FM I-49 for perimeter and flashing attachment.

c. Fire Safety - The complete roof covering assembly shall meet ASTM E 108, Class 1A or UL 790, Class A; and be listed as Fire-Classified roof deck construction in the UL RMSD, or Class I roof deck construction in FM P7825. All components of the system shall be UL labeled. Complete roof covering assembly shall:

1) Be Class A or B rated in accordance with ASTM E 108 , FM 4470, or UL 790; and

2) Be listed as part of Fire-Classified roof deck construction in UL RMSD, or Class I roof deck construction in FM P7825c.

d. Traffic Pads - Provide on roof system to protect roof from foot traffic. Provide traffic pads from roof access to and around roof mounted mechanical equipment and underneath removable mechanical equipment access panels. Traffic pads shall be of compatible material to roof.

B301002 1.2 FLUID APPLIED ROOFING SYSTEM

This paragraph covers the requirements for polyurethane or acrylic fluid applied elastomeric roofing systems to be applied directly on concrete roof slabs. Coating systems shall have mildewcide additives.

B301002 1.2.1 Polyurethane Elastomeric

A liquid applied, abrasion resistant, aliphatic urethane waterproofing system. Single component, VOC compliant, high adhesion, moisture cured, multi-layered application of fluid-applied polyurethane materials to prevent moisture migration and penetration during rain and high temperature, high humidity thermal cycling. The system shall have Class A Recognition as tested by accredited testing laboratory in accordance with Federal Standard ASTM E 108 to incorporate adhesion, impact and abrasion resistance, flexibility and excellent weather resistance.

a. Caulking Compound - one-component or two-component polyurethane compound compatible with the roofing system

b. Flashing Reinforcement - neoprene sheet at 45-60 mils thickness, polyester reinforcing fabric, or as recommended by the coatings manufacturer

c. Primer - water-based or solvent-based epoxy-polyamide, low viscosity, two-component primer/sealer compatible with the roofing system

d. Base Membrane – ASTM D-2240, ASTM D-412, ASTM D-1004, ASTM D-822, ASTM D-903, single-component, high adhesion, moisture cured, polyurethane membrane.

e. Elastomeric Membrane – ASTM D-2240, ASTM D-412, ASTM D-1004, ASTM D-822, ASTM D-903, high tensile strength, moisture cured, elastomeric polyurethane.

f. Top Coat – ASTM D-2240, ASTM D-412, ASTM D-1004, ASTM D-822, ASTM C-501, ASTM E-96, single-component, high tensile strength, abrasion resistant, weather resistant, aliphatic polyurethane coating.

g. Aggregate – Shall be rounded, non angular, preblended 20/30 mesh flint shot silica or equivalent and kiln dried. Install where slip resistance is required.

h. Traffic Pads - Preformed reprocessed rubber, compatible with the roof membrane, 1/4-inch (6.35 mm) minimum thickness, weighing not less than 1-1/2 pounds per square foot, to protect roof from foot traffic. Provide traffic pads around roof access and around roof mounted equipment and underneath removable mechanical equipment access panels.

B301002 1.2.2 FIELD QUALITY CONTROL

a. Tests for Surface Dryness - see paragraph B301002 1.2 for Performance Verification and Acceptance Testing requirements.

B301003 ROOF INSULATION & FILL

The insulation system shall be coordinated with the mechanical design to suit the energy requirements of the facility.

B301003 1.1 MINERAL FIBER BLANKET INSULATION

This paragraph covers the requirements for mineral fiber blanket thermal insulation in attics and above ceilings.

B301003 1.1.1 Products

a. Blanket Insulation - ASTM C 665, Type I, II, or III, as appropriate for the installation, Class A, membrane-faced surface with a flame spread of 25 or less; and a smoke developed rating of 150 or less when tested in accordance with ASTM E 84. Indicate insulation R-values on the design drawings.

b. Blocking – Treated wood, metal, un-faced mineral fiber blankets in accordance with ASTM C665, Type I. Blocking around chimneys and other heat producing devices shall be non-combustible and shall meet the requirements of ASTM E 136.

c. Vapor Retarder - 6 mil (minimum) thick polyethylene sheeting conforming to ASTM D 4397, with a water permeance value of 1 perm or less when tested according with ASTM E 96.

B301003 1.2 ROOF AND DECK INSULATION

This paragraph covers the requirements for insulation materials used below the roofing systems. This insulation system shall only be use for repair and maintenance of existing roofs.

B301003 1.2.1 Insulation Types

Roof insulation shall have an R-value determined per ASHRAE Standard 90.1 (latest edition) and be one or an assembly of a maximum of three of the following materials and compatible with attachment methods for the specified insulation and roof system:

a. Expanded Perlite Board – ASTM C 728, minimum thickness of 3/4" boards, and 4’ by 4’ board size.

b. Polyisocyanurate Board – ASTM C 1289, with a minimum compressive strength of 138 kPa (20 psi), unless overlaid with another board with a comparable or greater compressive strength. Use insulation facer as recommended by the roofing material manufacturer. Board size shall be restricted to 4’ by 4’ when applied in direct contact with concrete deck.

c. Composite Boards – ASTM C 984 (Polyisocyanurate-perlite) or ASTM C 1050 (Polystyrene-wood fiberboard), Type III, Grade 1, Class A, or ASTM C 1289, Type V, oriented strand board or waferboard on one side

and fibrous felt or glass fiber mat membrane or aluminum foil on the other.

d. Wood Fiber (high density) – ASTM C 208

B301003 1.2.2 Tapered Roof Insulation

On portions of the roof where the sloping of structure does not allow the minimum slopes, provide a factory tapered roof insulation system to provide positive drainage of roof system, and to include drainage around curbs, penetrations, and projections through the roof plane. For new construction, provide one layer of the tapered roof insulation assembly factory tapered to a slope not less than 1/2" per foot (13 mm per 300 mm). For re-roofing applications where slopes of 1/2" per foot (13 mm per 300 mm) cannot be achieved, provide a minimum of 1/4" per foot (6.35 mm per 300 mm) slope.

B301003 1.2.3 Protection Board

Provide for use as a thermal barrier (underlayment) or protection board for hot-mopped applications.

B301003 1.2.4 Glass Mat Gypsum Roof Board

ASTM C 1177, with a 0 Flame Spread and 0 Smoke Developed when tested in accordance with ASTM E 84.

B301003 1.2.5 Bitumens

a. Asphalt Primer - ASTM D 41

b. Asphalt - ASTM D 312, Type III or IV

c. Asphalt Roof Cement - ASTM D 4586, Type I for horizontal surfaces, Type II for vertical and sloped surfaces. Roof cement shall be compatible with membrane materials.

B301003 1.2.6 Underlayment

a. Asphalt-Saturated Felt Base Sheet for Single Layer Application - ASTM D 4869, Type II or ASTM D 226, Type II (30 pounds).

b. Polymer-Modified Self-Adhering Bitumen Sheet, 40 mil (1.1 mm) minimum thickness. Provide at roof perimeter, valley and roof penetration locations as a minimum.

B301003 1.2.7 Seal at Penetrations

Provide pre-manufactured flashing components for use in single-ply roofing applications. Seal laps and penetrations to prevent moisture vapor penetration. Adhesives, sealants, prefabricated components and spray foam products may be required.

B301003 1.2.8 Fasteners

Fasteners shall be flat, round or hexagonal steel (not less than 1-3/8" (35 mm) diameter) and 28 gage, or plastic plates (not less than 3 inches (75 mm) in diameter).

Fasteners in lightweight cellular concrete decks shall penetrate at least 1 inch (25 mm) but not more than 1-1/2 inches (32 mm) into the deck. Withdrawal resistance from lightweight cellular concrete deck shall be not less than 40 lbs. (18 kg) each, or 120 lbs. (54 kg) each in metal deck.

Fasteners in steel decks shall be hardened fasteners or screws conforming to FM A/S4470 and listed in FM P7825 for Class I roof deck construction.

Fasteners shall be place to withstand an uplift pressure required by the project program in the field of the roof and FM LPDS 1-49 for perimeter component and flashing attachment.

Roofing Nails - Provide corrosion resistant ring shank nails of sufficient length to penetrate a minimum of 1 inch (25 mm) into wood nailers or so as to provide appropriate embedment in substrate below. Fasteners shall conform to FM A/S4470, and be placed to withstand an uplift pressure of 90 psf (4.3 kPa) conforming to FM P7825, and FM 1-49 for perimeter fasteners.

B301003 1.2.9 Wood Nailers

Wood nailers shall be pressure-preservative-treated in accordance with AWPA M2 Standards, permanently marked or branded, and installed flush with the top of the adjacent insulation board. Separate treated wood nailers from roofing metals with underlayment.

B301003 1.2.9.1 Fasteners

Provide stainless steel, double hot-dipped galvanized or other corrosion resistant fasteners recommended by the treatment manufacturer for use with treated wood.

B301004 FLASHINGS & TRIM

B301004 1.1 FLASHING AND SHEET METAL

This paragraph covers the requirements for flashing and sheet metal work including scuppers, splash pans, and sheet metal roofing. Flashing and sheet metal shall be provided in accordance with roof manufacturer's printed installation instructions and in compliance with NRCA and SMACNA recommendations.

B301004 1.1.1 Materials

Furnish sheet metal items in minimum 8 to 10 foot (2.44 to 3.05 meter) lengths. Sheet metal items include the following: gutters, including hangers; downspouts; counter-flashings; gravel stops and fascias; cap, valley, stepped, base and eave flashings and related accessories.

a. Copper, Sheet and Strip - ASTM B 370, cold-rolled temper.

b. Lead-Coated Copper Sheet - ASTM B 101

c. Lead Sheet - Minimum weight 4 pounds per square foot (.19 kPa).

d. Steel Sheet, Zinc-Coated (Galvanized) - ASTM A 653/ A 653M. Galvanized steel items shall have a baked-on, factory applied finish of polyvinylidene fluoride or an equivalent fluorocarbon coating with a minimum thickness of 0.8 to 1.3 mils.

e. Stainless Steel - ASTM A 167, Type 302 or 304, 2D finish, fully annealed, dead-soft temper.

f. Aluminum Alloy Sheet and Plate - ASTM B 209

g. Pre-Finished Aluminum - Provide trim, gravel stops and fascias of Pre-finished aluminum. Finish shall be baked-on factory applied color coating of polyvinylidene fluoride (PVF2) or other equivalent fluorocarbon coating with a minimum thickness of 0.8 to 1.3 mils.

h. Aluminum alloy, Extruded Bars, Rods, Shapes, and Tubes - ASTM B 221

i. Solder - ASTM B 32

j. Polyvinyl Chloride Reglet - ASTM D 1784, Type II

k. Asphalt Primer - ASTM D 41

l. Fasteners - Fasteners shall be of the same or compatible metal with the item being fastened. Stainless steel fasteners shall be used to fasten dissimilar materials.

B301004 1.1.2 Field Quality Control

Fabrication and installation of sheet metal items shall be as follows:

a. Install work with watertight and hairline joints, without waves, warps, buckles, fastening stresses, or distortion, allowing for expansion and contraction.

b. Make surfaces to receive sheet metal plumb and true, clean, even, smooth, dry and free of defects and projections that could affect the application.

c. Provide sheet metal flashing in angles formed where roof decks abut walls, curbs, ventilators, pipes, or other vertical surfaces and wherever indicated and necessary to make the work watertight.

d. Provide prefabricated inside and outside corners at all sheet metal intersection pieces. Minimum leg length shall be 12 inches (300 mm), maximum length shall be 18 inches (450 mm).

e. Sheet metal shall be fabricated to conform to the contours of surfaces to which applied.

f. All sheet metal cap flashings shall have waterproof membrane underlayment installed behind or below the metal components.

g. Provide conforming sheet metal closures at all flashing termination conditions.

h. Provide fastenings and accessories as required to provide a securely attached, watertight construction. Cleats shall be a minimum of one gage heavier than the component to be attached.

i. Where sheet metal components are to be embedded in the roofing system, prime both sides of all metal flanges prior to installation.

B301005 GUTTERS AND DOWNSPOUTS

Provide gutters and downspouts compatible with roofing material and finish. Concealed (interior) gutters and downspouts are prohibited. The primary and secondary drainage systems shall be sized per applicable Plumbing and Building Codes. Finish shall be baked-on factory applied color coating of polyvinylidene fluoride (PVF2) or other equivalent fluorocarbon coating with a minimum thickness of 0.8 to 1.3 mils.

B301006 ROOF OPENINGS AND SUPPORTS

B301006 1.1 GENERAL REQUIREMENTS

Provide flashings for roof openings and supports as recommended by the NRCA and as specified below:

When existing pitch pans cannot be avoided and must be utilized, insure pitch pan is a preformed pan with minimum 4-inch (100 mm) height and 2-inch (50 mm) flange with 2-inch (50 mm) clearance on all sides of the penetration. Fill bottom 1/3 with non-shrink grout. Fill remainder with pourable elastomeric sealer sloped to drain. For round penetrations, provide a metal umbrella cap clamped to the penetration.

Assure all penetration flashings extend minimum 8 inches (200 mm) above the finished roof surface. Use round shapes to construct equipment supports. Equipment supports should be raised on a continuous curb a minimum of 14 inches (350 mm), but not less than as required by the NRCA.

B301006 1.2 ROOF HATCHES

Construct using NRCA approved techniques and details. Provide roof hatch where required by OSHA, or as access to roof when roof mounted equipment is used or other routine roof maintenance is required. Shall be capable of withstanding 170 mph wind load in accordance with ASCE-7.

B301006 1.2.1 Construction

Provide insulated roof hatches of 14 gage galvanized steel with 22 gage galvanized steel liner or 18 gage aluminum liner, and have integral curb, flange and flashings for securing to roof deck. Hinge shall be heavy-duty zinc plated steel with non-removable pins. Latching mechanism shall be zinc-coated steel slam latch with inside and outside

levers. Springs shall be greased compression springs in telescopic tubes. Provide interior locking of roof hatch. Provide a safety rail or ladder extension. Size roof hatch to allow access of routine maintenance equipment, but not less than 2′-6″ x 3′-0″ (750 mm x 900 mm). Hatch and access ladders shall conform to OSHA and other applicable safety standards.

B301006 1.4 GUARDS

Provide rails or guards as required by the OSHA, the International Building Code or other applicable safety standards.

B301090 OTHER ROOFING

B301090 1.1 LIGHTNING PROTECTION

Lightning protection component penetrations and attachments shall be sealed and flashed and anchored in a permanent manner and in a manner to avoid the degradation of the watertight integrity of the roof system. Do not cut or otherwise disturb the roof membrane. Mastic seals in the plane of the roof are unacceptable. Anchor plates set in mastic shall be set on roof surface cleaned of aggregate and loose material prior to mastic application.

B301090 1.2 ROOF DRAINS (EXISTING)

Where existing roof drains are to be reused in roof replacement construction, the contractor shall provide new, compatible flashing materials, a new drain clamping ring and new bolts for anchorage. Reuse of existing clamping ring and bolts is unacceptable.

-- End of Section --

FORMS

ROOFING SYSTEM COMPONENTS

1. Contract Number: _____

2. Building Number and Location: _____

3. NAVFAC Specification Number: _____

4. Deck Type: _____

5. Slope of Deck: _____

6. Insulation Type and Thickness:_____

7. Insulation Manufacturer: _____

8. Vapor Retarder (_____) Yes (_____) No

9. Vapor Retarder Type: _____

10. Roofing Description: _____

    Manufacturer (Name, address, and phone no.): _____

    _____

    Type: _____

    Method of attachment: _____

11. Statement of Compliance or Exception: _____

    _____

    _____

12. Date Roof Completed: _____

13. Warranty Period: _____

14. Roofing Contractor (Name and Address):

    _____

    _____

    _____

15. Prime Contractor (Name and Address):

    _____

    _____

    _____

Contractor's Signature _____ Date: _____

Inspector's Signature _____ Date: _____

Form page 1

SECTION C10

INTERIOR CONSTRUCTION
4/08

C10 GENERAL

C10 1.1 DESIGN GUIDANCE

Provide the design and installation in accordance with the following references. This Performance Technical Specification (PTS) adds clarification to the fundamental requirements contained in the following Government Standards. The general requirements of this PTS section are located in PTS Section Z10, *General Performance Technical Specification*.

Industry standards, codes, and Government standards that are referenced in the section text that are not found in the Unified Master Reference List (UMRL) in the Construction Criteria Base (CCB) at the Whole Building Design Guide Website, are listed below for basic designation identification. Comply with the required and advisory portions of the current edition of the standard at the time of contract award.

C10 1.1.1 Industry Standards and Codes

Sealant, Waterproofing & Restoration Institute

C10 1.1.2 Government Standards

UNIFIED FACILITIES CRITERIA (UFC)

UFC 1-200-01, *General Building Requirements*

UFC 3-100-10N, *Architecture*

UFC 3-120-10, *Interior Design*

C10 1.2 PERFORMANCE VERIFICATION AND ACCEPTANCE TESTING

Verification of satisfactory interior construction assemblies' performance shall be via Performance Verification Testing, as detailed in this section of the RFP. Provide special tests and special inspections in accordance with UFGS Section 01 45 00.05 20, *Design and Construction Quality Control.* The Contractor shall pay the cost of all testing.

C10 1.2.1 Slump and Compressive Strength Tests for Grout

Slump between 8 and 11 inches (200 and 275 mm). Provide minimum grout strength of 2000 PSI in 28 days, as tested per ASTM C 1019.

C10 1.2.2 Door Closure Field Test for Demountable Partitions, Retractable Partitions, Operable Panels, and Accordion Partitions

Perform a flashlight test of all joints in partitions and partition to wall, floor, and ceiling. No light from a flashlight shall be visible

from the opposite side of the partition. Adjust partition at locations where light is visible, and re-test.

C10 1.2.3 Field Test for Sprayed Fire-Resistive Materials

A qualified testing and inspection agency shall be engaged to prepare testing and adhesion reports to test for bond strength. Bond strength shall be tested per ASTM E 736 and be found to meet the requirements in UL's *Fire Resistance Directory* for coating materials.

C10 1.3 DESIGN SUBMITTALS

Design submittals shall be in accordance with Z10, *General Performance Technical Specifications*, UFGS section 01 33 10.05 20, *Design Submittal Procedures,* UFC 1-300-09N, *Design Procedures,* UFC 3-100-10N, *Architecture,* and UFC 3-300-10N, *Structural Engineering.*

C10 1.4 CONSTRUCTION SUBMITTALS

Submit construction submittals in accordance with PTS Section Z10, *General Performance Technical Specifications.* In addition to the Z10 requirements, the Designer of Record (DOR) shall approve the following submittals as a minimum:

Doors, door hardware, windows and glazing, cabinets and countertops, casework, and fireproofing/firestopping.

All structural elements necessary for construction

C1010 PARTITIONS

For general use, metal studs and standard grade GWB, CMU with prime filler coat, or CMU/cast-in-place concrete with GWB or skim coat plaster are acceptable unless shown otherwise in the Project Program. Reinforce points where doorknobs can strike a wall and anchorage points for wall mounted equipment.

Provide control joints and installation techniques as recommended by the manufacturer. See PTS Section C30, *Interior Finishes*, for additional information.

Provide painted GWB with access panels at surfaces furred for HVAC, plumbing and other utility services and controls behind wall surfaces.

Acceptable systems where "IMPACT RESISTANCE" (areas subject to physical abuse or wear) is designated in the project program requirements for impact resistance systems include:

a. CMU/cast-in-place concrete with or without plaster or furred impact resistant GWB or surface applied impact resistant textured acrylic architectural coating system.

b. GWB/metal stud system reinforced for impact resistance with a double layer of gypsum board using at least one layer of impact resistant gypsum board to resist denting and puncturing on the impact surface. If wall is subjected to impact on both sides, both sides of the stud

require a double layer of gypsum board. Structural, mechanical, and acoustical design requirements effect the metal stud/gypsum support configuration.

C101001 FIXED PARTITIONS

Provide fixed partitions, except where demountable or retractable partitions are specifically required by the “Room Requirements”, to include wood or metal studs, GWB, plaster, masonry and cast-in-place concrete walls. Sound-rated partition assemblies shall have a minimum Sound Transmission Coefficient (STC) as required by the project program. Construct sound-rated bulkheads above partition assemblies for continuity to the deck above.

C101001 1.1 CAST-IN-PLACE INTERIOR CONCRETE WALLS

Accomplish work in accordance with UFC 1-200-01, ACI 117 and 301/301M. Concrete Mix Design shall be suitable for the job conditions.

C101001 1.2 MASONRY PARTITIONS

Accomplish work in accordance with ACI 530.1/ASCE 6/TMS 602 and associated ASTM Standards for concrete masonry wall construction.

C101001 1.2.1 Testing

Masonry strength shall be determined in accordance with ACI 530.1. Where fire-rated assemblies are indicated, provide concrete masonry units that have been tested in conformance with ASTM E 119. Provide certificate of compliance to the Designer of Record (DOR) that the materials and assemblies meet the fire ratings indicated on the drawings.

C101001 1.2.2 Masonry Units Types

C101001 1.2.2.1 Concrete Masonry Units

Units of modular dimensions and air, water or steam cured. Surfaces of units to be plastered or stuccoed shall be sufficiently rough to provide bond and exposed surfaces of units shall be smooth and of uniform texture.

a. Hollow Load-Bearing Units: ASTM C 90, Type I or II, made of lightweight or normal weight aggregate.

b. Hollow Non-Load-Bearing Units: ASTM C 129, Type I or II, made with lightweight or normal weight aggregate.

c. Special Shapes: Provide special shapes as necessary to complete the work.

d. Fire-Rated CMU: Products shall be tested and approved by United Laboratories (UL) according to testing methods described in ASTM E 119, and listed as 2, 3 or 4-hour fire-rated.

C101001 1.2.2.2 Glazed Structural Clay Tile

Provide glazed tile of Grade S, Type I, conforming to ASTM C 126. Tile for fire-rated walls shall have the percent of solid required for that rating.

C101001 1.2.2.3 Pre-Faced Concrete Masonry Units

Provide pre-faced concrete masonry units conforming to ASTM C 744, load-bearing or non-load-bearing, lightweight, Grade N, Type I.

C101001 1.2.2.4 Glass Masonry Units

Provide glass block units made of clear colorless glass with polyvinyl butyl edge coating. Provide all aggregates, horizontal and vertical joint reinforcing, panel anchors, and expansion strip as recommended by the glass block manufacturer.

C101001 1.2.3 Masonry Partition Materials

a. Mortar - Provide ASTM C 270, Type N or S for non-shear-wall interior masonry. For Glass Block use Type S, White Portland cement.

b. Portland Cement - ASTM C 150, Type I, II, or III.

c. Masonry Cement - ASTM C 91, Type N, S, or M.

d. Sand - ASTM C144.

e. Grout - ASTM C 476, Fine aggregate for grouting cells / spaces 3″ (75 mm) or less, or coarse aggregate for grouting cells / spaces greater than 3″ (75 mm). Slump between 8 and 11 inches (200 and 275 mm). Provide minimum grout strength of 2000 PSI in 28 days, as tested per ASTM C 1019.

C101001 1.2.4 Masonry Accessories

a. Horizontal Joint Reinforcement – Fabricate from cold drawn steel wire, ASTM A 82. Wire shall be hot-dipped galvanized after fabrication in accordance with ASTM A 153/ A 153M, Class B-2, 1.5 ounces of zinc per square foot (42.52 g / 0.0929 sq. meter).

b. Anchors and Wall Ties – Provide of stainless steel, ASTM A 167, Type 304, or zinc-coated steel.

c. Reinforcing Bars – ASTM A 615 / A 615M.

C101001 1.3 COLD-FORMED METAL FRAMING

Load-Bearing Cold-Formed Metal Framing shall be designed in accordance with ASTM C 955. Install in accordance with ASTM C 1007.

C101001 1.3.1 Studs

Galvanized steel, ASTM A 653 / A 653M, SS Grade 50, G60

C101001 1.3.2 Framing Accessories

Fabricate steel-framing accessories of the same material and finish used for framing members, with minimum yield strength of 33,000 psi (230 Mpa). Accessories include, but are not limited to, the following: bracing, bridging, blocking, web stiffeners, end and foundation clips, gusset plates, stud kickers, knee braces, girts, joist hangers, reinforcing and backer plates.

Provide permanent metal-to-metal contact separation from stud to electrical conduits, plumbing pipes, and other internal wall system components, such as electrical wires.

C101001 1.4 METAL SUPPORT ASSEMBLIES

Provide steel materials for metal support systems with galvanized coating per ASTM A 653/ A 653M, G60; aluminum coating ASTM A 463/ A 463M, T1-25; or a 55% aluminum-zinc coating ASTM A 792.

C101001 1.4.1 Suspended and Furred Ceiling Systems, and Wall Furring

ASTM C 841(for lath); ASTM C 645 (for GWB).

C101001 1.4.2 Non-load-Bearing Wall Framing / Furring

ML/SFA MLF (for lath); ASTM C 645, but not thinner than 0.0179 inch (0.4547 mm) thickness. Provide 0.0329 inch (0.8357 mm) minimum thickness for supporting wall hung items such as cabinetwork, equipment and fixtures and for GWB.

C101001 1.5 ROUGH CARPENTRY

Unless otherwise noted, all rough carpentry shall be concealed from view. All framing and board lumber shall be graded and marked by a recognized association or independent inspection agency. Certification of grade is acceptable in lieu of grade markings. Framing lumber such as studs, plates, caps, bucks and nailers shall be of the minimum grade for the application in accordance with the grading rules for the local species of framing and board lumber.

C101001 1.5.1 Moisture Content

Air-dry or kiln dry lumber as follows:

a. Framing lumber and boards – 19% maximum

b. Timbers 5” and thicker – 25% maximum

C101001 1.5.2 Fire-retardant Treatment

Comply with AWPA C20 or AWPA C27.

C101001 1.5.3 Preservative Treated Lumber

Preservative treated lumber shall be in accordance with AWPA Standards.

C101001 1.5.4 Structural Lumber

Provide of species and grade as listed in AF&PA 101 that have the following minimum allowable unit stresses: 1050 Fb, 700 Fc with 1,200,000 E (for engineered uses) but not less than required by structural calculations.

C101002 DEMOUNTABLE PARTITIONS

This paragraph covers all demountable partitions and associated work, including tracks and anchoring systems.

C101002 1.1 PERFORMANCE REQUIREMENTS

C101002 1.1.1 Burning Characteristics

The system shall have a Class ‘A’ (under 25) flame spread rating in conformance with ASTM E 84.

C101002 1.1.2 Fire Endurance

Provide fabric and lining with a flame spread rating of 25 or less, fuel contribution rating of 15 or less, and a smoke generation of 50 or less when tested in accordance with ASTM E 84.

C101002 1.1.3 Acoustical Performance

Sound-rated partition assemblies shall have a minimum Sound Transmission Coefficient (STC) of as required by the project program. Construct sound-rated bulkheads above partition assemblies for continuity to the deck above.

C101002 1.1.4 Structural Performance

Panel deflection shall not exceed $1/120^{th}$ of the vertical span when tested in accordance with ASTM E 72.

C101002 1.1.5 Electrical Requirements

Electrically powered demountable partitions shall accommodate electrical switches and outlets, and be tied to the building electrical power system through over-head or end-mount base feeds.

C101002 1.1.6 Field Test

Perform field tests as required in Paragraph C30 1.2 PERFORMANCE VERIFICATION AND FIELD TESTING.

C101002 1.2 WIRE MESH PARTITIONS

Wire mesh partitions shall be complete with all items necessary for a useable, and rigid installation. Provide pre-manufactured assemblies with pre-bolted connections. Wire mesh partition doors require a means of locking. Key and cylinder locks are required for partition doors used daily.

C101002 1.2.1 Materials

a. Steel shapes, plates and bars – ASTM A 36/ A 36M.

b. Cold-formed steel – AISI SG-673.

c. Wire mesh – Provide carbon steel wire with woven diamond mesh and intermediate crimping. Wire shall be 10 gauge mesh for seasonal storage, 6 gage mesh for protection of equipment and tools.

C101003 RETRACTABLE PARTITIONS

This paragraph covers all retractable partitions and associated work, including tracks and anchoring systems. Wall assemblies above retractable partitions shall provide a sound barrier equal to, or greater than, the sound rating of the partition.

C101003 1.1 PERFORMANCE REQUIREMENTS

The retractable partitions below shall meet the following performance requirements.

C101003 1.1.1 Burning Characteristics

The system shall have a Class ‘A’ (under 25) flame spread rating in conformance with ASTM E 84.

C101003 1.1.2 Fire Endurance

Provide fabric and lining with a flame spread rating of 25 or less, fuel contribution rating of 15 or less, and a smoke generation of 50 or less when tested in accordance with ASTM E 84.

C101003 1.1.3 Acoustical Performance

Sound-rated partition assemblies shall have a minimum Sound Transmission Coefficient (STC) of as required by the project program. Construct sound-rated bulkheads above partition assemblies for continuity to the deck above.

C101003 1.1.4 Electrical Requirements

Electrically powered partitions shall be controlled by electrical switches located in the room where the partitions are stored. Electrical outlets shall be tied to the building electrical power system through over-head or end-mount base feeds.

C101003 1.1.5 Door Closure Field Test

Perform field tests as required in Paragraph C30 1.2 PERFORMANCE VERIFICATION AND FIELD TESTING.

C101003 1.2 PARTITION MATERIALS

a. Aluminum Extrusions - ASTM B221, Alloy 3003

b. Steel Sheets - ASTM A 653 / A653M

c. Fabric Coating - CFFA-W-101-B, Type II

C101003 1.2.1 OPERABLE PANEL PARTITIONS

Operable panel partitions shall be factory finished, supported from an overhead track without floor guides, and complete with hardware, track, and accessories necessary for operation.

a. Suspension System - shall consist of steel or heavy duty extruded aluminum track connected to the structural system by threaded rods, and trolleys designed to support the weight of the partition. Provide steel track of 16 gage minimum, phosphate treated and finished, or zinc or cadmium coated, or provide extruded aluminum track with minimum thickness of 1/8 inch (3.2 mm). Tracks shall have an integral ceiling guard. Trolleys shall have at least two ball bearing nylon or steel tired wheels spaced according to manufacturer's design criteria and four at an end post.

C101003 1.2.2 ACCORDION PARTITIONS

Provide full accordion type partitions, factory finished, supported from overhead track without floor guides, and complete with hardware, track, and accessories necessary for operation.

a. Suspension System – shall consist of steel or aluminum track and trolleys designed to support the weight of the partition. Provide steel track of 16 gage minimum, phosphate treated and finished, or zinc or cadmium coated, or provide extruded aluminum track with minimum thickness of 1/8 inch (3.2 mm). Tracks shall have an integral ceiling guard. Trolleys shall have at least two ball bearing nylon or steel tired wheels spaced according to manufacturer's design criteria and four at an end post.

C101003 1.2.3 CUBICLE TRACK AND HARDWARE

Provide heavy-duty ceiling surface mounted tracks except in ceiling heights over nine feet, hanger mounted tracks may be used, with stainless steel fasteners. Track bends shall be a minimum of 18 inches radius.

C101003 1.2.3.1 Materials

a. Extruded Aluminum Track - ASTM B 221 and ASTM B 456; alloy 6063-TS, channel shape minimum 1-1/4 inch (32 mm) wide by 1-1/8 inch (29 mm) deep, 0.050 inch (1.27 mm) minimum wall thickness.

b. Carrier Unit - Provide silent type with double canted wheel carrier. Wheels shall have nylon on stainless steel hooks with swivel to support curtain. Provide 2.2 carriers for every foot of track length plus one additional carrier.

C101004 INTERIOR GUARDRAILS & SCREENS

This paragraph covers assemblies to include interior guardrails associated with open sides of floors, but not stairs’ handrails. Also included are screens and associated work to include tracks and anchoring systems.

C101004 1.1 MATERIALS

a. Structural Carbon Steel - ASTM A 36/ A 36M

b. Structural Tubing - ASTM A 500

c. Steel Pipe - ASTM A 53, Type E or S, Grade B

d. Aluminum Alloy products - Products shall conform to ASTM B 209 for sheet plate, and ASTM B 221 for extrusions, and ASTM B 26/B 26M or ASTM B 108 for castings, as applicable.

C101004 1.2 FABRICATION FINISHES

C101004 1.2.1 Galvanizing

Hot-dip galvanize steel items to be exposed to water contact. Zinc-coat steel in the largest unit possible. Galvanize per ASTM A 123/ A 123M, ASTM A 153/ A 153M or ASTM A 653/ A 653M, G90, as applicable.

C101004 1.2.2 Non-Ferrous Metal Surfaces

Protect by plating, Class I anodic coatings, or 70% polyvinylidene fluoride organic coatings. See Section C30 for additional coatings/finish information.

C101004 1.3 GUARDRAILS

Design guardrails in accordance with the IBC, except delete the handrail design load reduction for code exceptions for residential, prisons, industrial, high hazard, and storage facilities. Provide materials in accordance with NAAMM PR, and provide the same size rail and post. Provide pipe collars of the same material and finish as the handrail and posts.

C101005 INTERIOR WINDOWS

For fixed interior windows, assemblies include frames, glazing, caulking, and other associated work. For other window types, see PTS Section B20, *Exterior Enclosure*. Glazing for windows specified under this section is located in C101007, “Interior Glazing.”

C101005 1.1 ALUMINUM WINDOWS

Each window unit shall be a complete factory assembled unit with or without glass installed. Fabrication of window units shall comply with AAMA 101.

a. Fixed Windows - Type F, LC25 for residential, or HC40 for non-residential (commercial).

b. Sliding Glass Pass Windows - Frames and glass channels shall be of heavy type 6063-TS aluminum extrusions. Provide 1/4-inch (6.35 mm) clear tempered glass.

c. Bullet-Resistant Pass Windows - Conform to UL classification (1 through 8) as required by the installation. Provide fixed, bullet-resistant glazing with pass tray for installations requiring high levels of security.

C101005 1.2 VISION PANELS

a. Wood Windows

Wood windows shall consist of complete units, including sash, glass, frame and hardware. Window units shall meet the Grade 40 requirements of AAMA 101. Wood members that will receive a transparent finish shall be in one piece, not finger-jointed.

b. Plastic Windows

Provide PVC windows, reinforcing members, welded corners, fasteners, hardware and anchors conforming to AAMA 101 or ASTM D 4099.

1) Windows shall be fixed or operable, as stated in the project program.

2) Material and Color - Window (PVC) color shall be a consistent color all the way through the material.

c. Hollow Metal Vision Panels – shall meet the requirements of hollow metal frames, paragraph C102001.

C101005 1.3 BULLET RESISTANT WINDOWS

Windows shall meet U.L. Classification, Rating Level 1 through 8, as required for the installation and stated in the project program. Each window shall be a complete factory-assembled unit with glass factory or field installed.

C101005 1.3.1 Glazing

Provide as specified under this section, paragraph entitled “Interior Glazing.”

C101005 1.3.2 Setting Materials

Provide types required for the glazing applicable setting method specified in the *GANA Glazing Manual*. If sealants are employed, use elastomeric sealants, ASTM C 920, Type S or M, Grade NS, Class 12.5, Use NT.

C101005 1.4 FINISHES

Finish exposed aluminum or steel window surfaces as follows:

a. Anodic Coating

Architectural Class I (0.7 mil or thicker), designation AA-M10-C22-A41, clear (natural) or A42, integral color or A44, electrolytically deposited color anodized.

b. Organic Coating

Provide a high-performance coating in accordance with AAMA 2605 with a total dry film thickness not less than 1.2 mils (0.03 mm).

C101006 GLAZED PARTITIONS & STOREFRONTS

This paragraph covers fixed interior glazed partitions, including interior storefronts with doors. Assemblies include frames, glazing, caulking, and other associated work. See Section B20, *Exterior Enclosure*, for aluminum storefront framing components and performance requirements.

C101006 1.1 GLASS

Refer to “Interior Glazing”.

C101006 1.2 SETTING AND SEALING MATERIALS

Provide as specified in the *GANA Glazing Manual*, SIGMA TM-3000 and SIGMA TB-3001, and per manufacturers recommendations.

C101007 INTERIOR GLAZING

ASTM C 1036, unless specified otherwise. Provide patterned glass where required to obscure view into bathrooms and dressing rooms.

Provide setting and sealing materials, stops and gaskets as recommended by the glass or acrylic sheet manufacturer.

Glazing thickness indicated in the following paragraphs is the minimum acceptable thickness. Provide thicker glazing if required by the code or the manufacturer for the given application.

C101007 1.1 GLASS

C101007 1.1.1 Clear Glass

Type I, class I (clear), quality q4 or q5 for patterned glass.

C101007 1.1.2 Wire Glass

Provide glazing of Type II, Class I, Form I, Quality q8 mesh stainless steel, diamond pattern, 1/4 inch (6.35 mm) thick. Glass shall comply with ASTM E 163.

C101007 1.1.3 Patterned Glass

Type II, Class 1 (translucent), Form 3 (patterned), quality q7 (decorative), Finish f2 (patterned two sides), 1/8 inch (3.2 mm).

C101007 1.1.4 Laminated Glass

Fabricate from two pieces of Type I, Class 1, quality q3 glass laminated together with a clear, 0.030 inch (0.75 mm) thick polyvinyl butyral interlayer. Total thickness shall be nominally 1/4 inch (6.35 mm).

C101007 1.1.5 Bullet-Resistant Glass

Provide bullet resistant composite glazing panel listed by UL ABPMED with a power rating corresponding to the installation prescribed, and in accordance with UL 752.

C101007 1.1.6 Tempered Glass

ASTM C 1048, Kind FT (fully tempered), Condition A (uncoated), Type I, Class 1 (clear), quality q3.

C101007 1.2 PLASTIC GLAZING

C101007 1.2.1 Bullet-Resistant Plastic Sheet

Bullet resistant rating in accordance with UL 752, Class I, clear in color. Only use bullet-resistant plastic sheet on existing interior windows that cannot be removed and replaced.

C101007 1.2.2 Polycarbonate Sheet

ANSI Z97.1, Mar-resistant, Clear and smooth both sides when used for vision glazing; Translucent, textured both sides when used for obscure glazing. Mar-resistant sheet shall have a change in haze of between 5 and 8 percent under silica carbide test, 1600 grams, ASTM D 673.

Provide warranty for polycarbonate sheet glazing for a period of 5-years that includes the following:

a. Warranty Type I, Class A (UV Stabilized) sheets against breakage;

b. Warranty Type III (coated and mar-resistant) sheets against breakage and coating delamination.

c. Warranty Type IV (coated sheet) against breakage and yellowing

C101008 INTERIOR JOINT SEALANT

Sealant joint design and application shall be in accordance with the general requirements of *Sealants: A Professionals' Guide* from the Sealant, Waterproofing & Restoration Institute. Refer to manufacturers' recommendations for chemical resistance.

C101008 1.1 JOINT SEALANT TYPES FOR INTERIOR WORK

Sealants shall be paintable, and shall match the color of adjacent surfaces.

a. Vertical Surfaces - ASTM C 920, Type M, Grade NS, Class 25, Use NT.

b. Horizontal Surfaces - ASTM C 920, ASTM D 1190 for traffic surfaces, Type M, Class 25, Use T.

c. Pools and pool decks – for vertical joints, Gun grade: ASTM C 920, Type M, Grade NS, Class 25, NT; for horizontal deck traffic joints pourable: ASTM C 920, Type M, Grade P, Class 25, T

d. Food Service – Use a Vinyl Acetate Homopolymer, or other low VOC, non-toxic sealant approved for use in food preparation areas.

e. Chemical Resistance - Ensure that all sealants are chemically compatible or resistant to adjacent materials, or materials that may come into contact with the sealants in the course of the building life.

C1020 INTERIOR DOORS

Door hardware shall be as specified in “Interior Door Hardware” in this section.

C102001 STANDARD INTERIOR DOORS

This paragraph covers all standard interior wood or hollow metal doors with frames, hardware, locks, and finish.

C102001 1.1 STEEL DOORS

Hardware preparation shall be in accordance with SDI 17, ANSI/DHI A115 and ANSI/SDI 100. Doors shall be hung in accordance with ANSI/SDI 100.

C102001 1.1.1 Standard Steel Doors

ANSI A 250.8, Level 1, (occasional use, low abuse types such as closet doors without locks); Level 2, (low use, moderate abuse types such as office/storeroom doors); Level 3, (moderate use, high abuse types such as BEQ sleeping room doors); Level 4, (high use, high abuse types such as corridors, stairways, assembly spaces, and main entry doors), with a physical performance level of ‘A’. Maximum door undercut shall not exceed 3/4 inch (19 mm).

C102001 1.1.2 Sound Insulated Doors and Frames

Provide sound insulated door and frame assemblies into rooms requiring wall assemblies to be sound insulated with a Sound Transmission Class (STC) rating as required. The STC rating for the door and frame assembly shall be not less than the wall assembly STC rating.

C102001 1.1.3 Accessories

a. Shelves for Dutch doors shall comply with SDI 111-B, and be of steel not lighter than 16 gage.

b. Louver shall comply with SDI 111-C, shall be stationary, sight-proof type. Use lightproof louvers if function of room requires darkness. Louver frames shall be 20-gage steel with louver blades minimum 24 gage.

C102001 1.2 STANDARD STEEL FRAMES

ANSI A 250.8. Form frames with welded corners for installation in masonry partitions and knock-down field assembled corners for installation in metal stud and GWB partitions. Frames shall be set in accordance with SDI 105. Form stops and beads with 20 gauge steel.

Provide a minimum of three jamb anchors and base steel anchors per frame, zinc-coated or painted with rust-inhibitive paint, not lighter the 18 gauge. Secure frames to previously installed concrete or masonry with expansion bolts in accordance with SDI 11-F. Provide mortar infill of frames in masonry walls, and gypsum board compound infill at each jamb anchor in metal frame walls.

C102001 1.3 FINISHES

a. Factory-Primed Finish. Doors and frames in non-humid, non-corrosive environments shall be factory primed with a rust inhibitive coating as specified in ANSI A 250.8. Factory prime doors on six sides of the door.

b. Zinc-Iron Alloy Coating (Galvanealed) and Factory Primed Finish

c. Fabricate interior doors and frames (for installation in such rooms as kitchens, laboratories, battery charging, utility rooms and humid areas such as shower/drying areas, areas with frequent floor mopping, or corrosive chemical atmospheres) from zinc coated steel, alloyed type, complying with ASTM A 653/ A 653M. Factory prime doors and frames as specified in ANSI A 250.8.

d. Manufacturer’s primer shall be compatible with door finish system in C30, *Interior Coatings*.

C102001 1.4 WOOD DOORS

C102001 1.4.1 Wood Doors and Frames

Install wood doors and frames according to workmanship requirements of the Architectural Woodwork Institute Quality Standard 900-T-4 Custom Grade. Wood door frames may only be used in residential construction.

For non-residential buildings provide extra-heavy doors for stairways, building entrances, corridors, assembly spaces, and other high use interior doors. Provide heavy duty doors for other non-residential locations and for residential buildings.

Wood doors shall be solid wood doors with wood core and solid wood edge bands. Vertical edge bands shall be one piece or laminated two-piece solid lumber to match face veneer species for natural finish wood doors. Reinforce door at all hardware attachments to door with sound grade hardwood. Horizontal edge bands shall be solid wood or structural composite lumber.

a. Stile and Rail Doors Provide premium or select grade Ponderosa pine, Douglas Fir, White Pine, or Yellow Poplar stile and rail doors conforming to WDMA I.S.6A-01. Doors shall be premium grade, heavy duty or as required by the project program.

b. Interior Flush Doors - Flush doors shall conform to WDMA I.S.6A-01. Doors shall be premium grade, heavy duty, or otherwise as required by the project program.

Provide WDMA I.S. 1A-04 SCLC-5 structural composite lumber core, or staved lumber core, or PC-5 particleboard core construction. Do not use particleboard cores where it is anticipated that hardware may be screw mounted to the doors. Provide hardwood or softwood veneers cut for the best presentation for natural finishing of doors. Set match veneers of all components of a door opening. Face veneers shall be 1/20” thick before sanding.

c. Closet Doors – Provide flush, paneled, or louvered doors of premium or custom grade, conforming to WDMA I.S.1A-01, premium or custom grade, heavy duty. Doors shall be hinged or sliding.

d. Acoustical Doors and Frames - WDMA I.S 1-A-2004 WDMA I.S.6A-01. Doors shall be premium or custom grade, heavy duty as required by the project program. Provide acoustical doors in solid core, constructed for door, hardware, and frame to provide a Sound Transmission Class (STC) rating of 39 (minimum) when tested in accordance with ASTM E 90.

C102001 1.4.2 Wood Door Accessories

a. Door Louvers - Louver shall comply with SDI 111-C. Louver frames shall be 20-gage steel with louver blades minimum 24 gage.

b. Door Light Openings - Provide glazed openings with the manufacturer’s standard wood moldings. Moldings for doors to receive a natural finish shall be of the same species and color of the face veneer.

C102001 1.4.3 Fabrication

a. Marking - Each door shall bear a stamp, brand or other identifying mark indicating quality and construction of the door.

b. Adhesives and Bonds - WDMA I.S. 1-A. Use Type I (water-proof) adhesive for assembly of interior doors and for the fabrication of stiles, rails, crossbands, and veneers. Adhesive for doors to receive a natural finish shall be non-staining. Type II (water resistant) is allowed for fabrication of core parts.

C102001 1.4.4 Finishes

Unless required otherwise by the project program, typically provide natural finish wood doors. Factory prime and or seal on all six sides of doors.

a. Factory Finish - Provide doors finished at the factory as follows: AWI Quality Standards Section 1500, specification for Conversion varnish, alkyd urea catalyzed polyurethane, or acrylated UV curable epoxy. The coating shall be AWI Quality Standards premium, medium rubbed sheen, with an open or closed grain effect. Poly-wrap prefinished wood doors at factory for shipping.

b. Field Finish - Prepare doors in accordance with WDMA I.S.1-A-2004. Factory prime or seal doors. Manufacturer’s primer or sealer shall be compatible with door finish system in Section C30, *Interior Finishes*.

c. Plastic Laminate Finish - Factory applied, NEMA LD 3, 0.050 inch (1.27 mm) minimum thickness.

C102002 GLAZED INTERIOR DOORS

This paragraph covers all glazed interior doors with glass, frames, hardware and locking devices. See paragraph entitled “Interior Glazing” in this section for glazing options.

C102002 1.1 ALUMINUM DOORS, FRAMES AND STOREFRONT

Provide swing-type aluminum doors and frames complete with framing members, transoms, side-lites, and accessories. Fabricate of ASTM B 221, Alloy 6063-TS for extrusions.

C102002 1.2 FABRICATION

C102002 1.2.1 Aluminum Frames

Provide frames with removable glass stops and glazing beads to accommodate fixed glazing. Countersink screws for exposed fastenings. Jointing of framing members shall obtain hairline fit, be reinforced, and mechanically secured.

C102002 1.2.2 Aluminum Doors

Doors shall be not less than 1-3/4 inches (44 mm) thick, with a minimum wall thickness of 0.125 inch (3.2 mm), except beads and trim, 0.050 inch (1.27 mm). Full glazed stile and rail doors shall have medium or wide stiles and rails. Maximum water leakage of the door and frame shall be “no uncontrolled water penetrating systems or appearing on systems’ normally exposed interior surfaces from sources other than condensation.” Water controlled by flashing and gutters that is drained to exterior and cannot damage adjacent materials or finishes is not considered water leakage.

C102002 1.2.3 Welding and Fastening

Locate welds and fasteners on unexposed surfaces, where possible. Exposed welds shall be dressed smoothly. Exposed fasteners shall have counter-sunk heads. Weld concealed reinforcements for hardware in place. Hardware reinforcements shall be of stainless steel or steel with a hot-dipped galvanized finish, and shall be secured with stainless steel screws.

C102002 1.2.4 Finishes

Provide exposed aluminum surfaces with factory finish of anodic or organic coating. Anodic coatings shall conform to AA 45, with an Architectural Class I finish, 0.7 mil or thicker. Organic coatings shall be a baked enamel finish in accordance with AAMA 2605 with a total dry film thickness not less than 1.2 mil. Exposed fasteners to match the door finish.

C102003 FIRE DOORS

This paragraph covers all interior fire doors, including all necessary frames, hardware, closing devices, and alarms associated with the door.

C102003 1.1 FIRE AND SMOKE DOORS AND FRAMES

Provide in conformance with NFPA 80 an NFPA 105. Fire doors and frames shall bear the label of UL, FM or WHI attesting to the rating required. Door and frame assemblies shall be tested for conformance per NFPA 252 or UL 10B (for neutral pressure) or UL 10C (for positive pressure). Wood fire doors shall also comply with ASTM E 152.

Provide stainless steel astragals complying with NFPA 80 for fire-rated assemblies and NFPA 105 for smoke control assemblies.

C102004 SLIDING AND FOLDING DOORS

Provide paneled or louvered closet doors of premium or custom grade, conforming to WDMA I.S.6A-01, heavy duty. Doors shall be sliding or bi-folding, as required by the program.

C102005 INTERIOR OVERHEAD DOORS

See paragraph titled “OVERHEAD AND ROLL-UP DOORS” within PTS Section B20.

C102006 INTERIOR GATES

Any special type gate installed in the interior of a facility, including frames, hardware, hoisting devices, finish, and other associated work.

C102007 INTERIOR DOOR HARDWARE

C102007 1.1 DOOR HARDWARE

Provide the services of an Architectural Hardware Consultant (AHC), Certified Door Consultant (CDC), or an Electrified Hardware Consultant (EHC) to assist the Designer of Record in preparation of the door hardware schedule and product selection. The hardware consultant shall sign and seal the door hardware construction submittal. Provide, as far as feasible, locks, hinges, pivots, and closers from one lock, hinge, pivot, or closer manufacturer's make. All door hardware shall be clearly and permanently marked by the manufacturer, on a location to be visible after installation. Modify hardware as necessary to provide features indicated or specified. For necessary hardware items not indicated in these specification sections, provide ANSI/BHMA grade 1 rated hardware.

C102007 1.1.1 Hardware for Fire Doors

All hardware provided shall meet the requirements of NFPA 80 for Fire Doors and NFPA 101 for exit doors. Hardware shall bear the label of Underwriter’s Laboratories, Inc., and be listed in UL BMD or labeled and listed by another testing laboratory acceptable to the contracting officer. Comply with NFPA 105 for smoke control assemblies.

C102007 1.1.2 Hinges

BHMA A156.1, Grade 1, 4-1/2 x 4-1/2 inches (108 x 108 mm) with non-removable pin or anti-friction bearing hinges.

C102007 1.1.3 Locks and Latches

For non-residential buildings use Series 1000, Operational Grade 1, Security Grade 2 for stairways, building entrances, corridors, assembly spaces, and other high use interior doors. Use Series 4000, Grade 1 for non-residential locations not using Series 1000 hardware. For residential buildings use Series 4000, Grade 2 for interior doors.

a. Mortise Locks and Latches - BHMA A 156.13, Series 1000, Operation Grade 1, Security Grade 2.

b. Bored Locks and Latches - BHMA A 156.2, Series 4000, Grade 1, or Grade 2.

C102007 1.1.4 Combination Locks

BHMA A 156.2. Heavy-duty, mechanical combination lockset with 5 pushbuttons, standard-sized knob or lever, 3/4-inch (19 mm) deadlocking latch, 2-3/4 inch (70 mm) back-set. Provide deadbolt key override option. Safelock, Simplex, and Venn are acceptable manufacturers. Provide a hardware grade equivalent to Grade 1, series 4000. Provide a 5-year parts and labor warranty.

A door into a sensitive area shall be fitted with a FF-L-2740A X-09 Heavy-duty, combination Electromechanical Deadbolt lock for pedestrian doors, with a drill resistant dial ring mounting plate, 2-3/4 inch (70 mm) back-set, with Automatic Lock Reset, High-Security combination scramble, and resistant to all forms of external manipulation and environmental attack. KABA-MAS is the acceptable manufacturer. Three Modes of Operation: 1) The Single Combination Mode allows access by dialing a six-digit combination. 2) The Dual Combination Mode allows access only when two separate codes are entered within 10 seconds of one another. 3) The Supervisory/Subordinate Mode allows access by a subordinate only after a supervisor code has been entered. Audit Feature: Lock shall have a full compliment of auditing features, including non-resettable openings log, and unsuccessful attempts log (audits after 3 unsuccessful attempts) that resets once the proper access code is entered. Lock shall generate its own electrical energy with each turn of the dial, with no batteries or wires required. Lock shall be designed to fit industry standard door mounting pattern.

C102007 1.1.5 Card Key System

Provide card key type access units for specialized entries as required by the program. Provide lithium battery powered, magnetic stripe keycard locksets that are ANSI/BHMA A156.13, Series 1000, Grade 1, mortise or ANSI/BHMA A156.2, Series 4000, Grade 1, cylindrical locks, tamper resistant, UL listed with 1 inch (25 mm) throw deadbolt, 3/4-inch (19 mm) throw latch bolt, auxiliary dead-locking latch, and 2-3/4 inch (68.75 mm) backset. The latch bolt and the dead bolt shall be operated simultaneously by rotating inside lever. Locks with mechanical override lock cylinders are not acceptable. Locks shall be operated only by a correctly encoded keycard. Use of a newly issued

keycard automatically re-keys the lock and voids the previous keycard. The lock shall re-lock immediately after outside lever is turned and latch retracted. Locks shall have memory that is capable of recording up to 140 entries into each room, identification of the keycard used to access the room, the date and time of entry. Entry information of the lock shall be retrievable by a data key that can be inserted into the lock and then taken to the front desk printer to display information. Other components that are required for this system at the front desk are a personal or laptop computer, printer and encoder to program each key.

For exit device locks with card key access, provide mortise type, narrow stile exit devices with 24 volt DC, solenoid option for card key exterior access at aluminum storefront doors. Provide mortise type exit devices with 24 volt DC, solenoid option with alarm and remote exterior access for card key access at insulated hollow metal doors. The alarmed exit device shall sound when exiting only.

System shall be capable of accepting a minimum of 12 keycard access levels, security auditing and computer interfacing with the existing or new management system. Provide a single point of contact customer service representative accessible by telephone with a 10-digit telephone number without additional dialing hierarchies except that a maximum 4-digit extension is permissible. On-site service shall be provided within 3 hours from request within the first 12 months of occupancy. Provide a 5-year parts and labor warranty.

C102007 1.1.6 Exit Devices

BHMA A 156.3, Grade 1. Touch bars shall be provided in lieu of conventional crossbars and arms. Use manufacturer’s integral touch bars in aluminum storefront doors.

C102007 1.1.7 Cylinders and Cores

Provide cylinders and cores for new locks, including locks provided under other sections of this specification. Cylinders and cores shall have seven pin tumblers. Cylinders shall be products of one manufacturer, and cores shall be the products of one manufacturer. Rim cylinders, mortise cylinders, and knobs of bored locksets shall have interchangeable cores, which are removable by special control keys. Stamp each interchangeable core with a key control symbol in a concealed place on the core.

C102007 1.1.8 Keying System

Provide a master key system for the facility unless more than one tenant/tenant command shall reside in a facility. Provide a grand master keying system, or great, grand master keying system if multiple tenants or multiple buildings are required. Provide an extension of the existing keying system for existing facility additions. Name the manufacturer of the existing locks, and indicate if they have interchangeable cores. Provide construction interchangeable cores when subcontractors require keys during construction.

The Contractor shall coordinate a keying system meeting. The Contractor's Project Manager, Superintendent, Hardware Subcontractor, Electrical Subcontractor (if keying hardware is electric), Designer of Record, Contracting Officer, Public Works Base Hardware Specialist, and the Using Activity shall attend this meeting to establish the keying system for the project. This meeting is intended to identify base limitations, the necessary security, and access control within the facility. The meeting shall produce a marked up copy of the floor plan indicating the doors to receive locks and the doors to be keyed together, and any master keying or grand master keying

C102007 1.1.9 Keys

Furnish one file key, one duplicate key and one working key for each key exchange and for each master and grand master keying system.

C102007 1.1.10 Key Cabinet and Control System

BHMA A 156.5 Provide key cabinet with 25% more key hooks than required for interior and exterior doors.

C102007 1.1.11 Lock Trim

Cast, forged or heavy wrought construction and commercial plain in design.

a. Knobs and Roses - Knobs and roses shall meet test requirements of BHMA A 156.2 and BHMA A 156.13.

b. Lever Handles - Provide lever handles in lieu of knobs, as required by UFAS and ADAAG. All lever handles shall have the freewheeling feature.

C102007 1.1.12 Door Bolts

BHMA A 156.16. Provide automatic latching flush bolts for double doors with both door leafs active, BHMA A 156.3, Type 25.

C102007 1.1.13 Closers

BHMA A 156.4, Series C02000, Grade 1, with PT 4C, with full size cover.

C102007 1.1.14 Overhead Holders

BHMA A 156.8, Grade 1.

C102007 1.1.15 Closer Holder-Release Devices

BHMA A 156.15, Grade 1.

C102007 1.1.16 Door Protection Plates

Provide armor, mop, and kick plates conforming to BHMA A 156.6. Provide door kick plates on all doors with closers and doors leading to corridors or circulation spaces. Provide armor plates on all doors

that receive cart traffic. Provide mop plates on all doors in rooms that have a mop-able floor finish.

C102007 1.1.17 Door Stops and Silencers

BHMA A 156.16, Type L03011, three per single door and four per double door.

C102007 1.1.18 Thresholds

BHMA A 156.21.

C102007 1.1.19 Door Gasketing

BHMA A 156.22. Use light-proof gasketing for room functions that require darkness and integral sound-proof gasketing on acoustically rated doors.

C102007 1.1.20 Finishes

Provide one of the following hardware finish systems, matching the exterior hardware finish system.

a. BHMA A156.18. Hardware shall have BHMA 630 finish (satin stainless steel), unless specified otherwise. Provide items not manufactured in stainless steel in BHMA 626 finish (satin chromium plated) over brass or bronze, except surface door closers which shall have aluminum paint finish, and except steel hinges which shall have BHMA 652 finish (satin chromium plated). Hinges for exterior doors shall be stainless steel with BHMA 630 finish or chromium plated brass or bronze with BHMA 626 finish. Exit devices may be provided in BHMA 626 finish in lieu of BHMA 630 finish except where BHMA 630 is specified under paragraph entitled "Hardware Sets". Exposed parts of concealed closers shall have finish to match lock and door trim. Hardware for aluminum doors shall be finished to match the doors.

b. BHMA A156.18. Hardware shall have BHMA 612 finish (satin bronze), unless specified otherwise. Surface door closers shall have bronze paint finish. Steel hinges shall have BHMA 639 finish (satin bronze plated). Exposed parts of concealed closers shall have finish to match lock and door trim. Hardware for aluminum doors shall be finished to match the doors. Hardware showing on interior of bathrooms, shower rooms, toilet rooms, washrooms, laundry rooms, and kitchens shall have BHMA 629 finish (bright stainless steel) or BHMA 625 finish (bright chromium plated).

C102090 OTHER INTERIOR SPECIALTY DOORS

C102090 1.1 ACCESS DOORS

Provide manufactured access doors and frames of 16-gage steel minimum with concealed pivots or a continuous piano hinge and flush stainless steel cam latch. Finish with manufacturer’s standard primer coat finish and paint to match the wall or ceiling unless a stainless steel finish is required in the Project Program. Provide UL Rated access doors in fire rated

assemblies. Access panels located in furred wall spaces shall have an inserted material to match adjacent wall surface. Size access doors large enough to allow convenient hand and tool access and operation of controls and equipment beyond the door. If maintenance of controls or equipment beyond the door requires removal, size access door to allow removal and reinstallation of new equipment through the access door. Provide access panels capable of receiving finish material inserts in visible wall locations of habitable spaces.

C102091 OTHER INTERIOR PERSONNEL DOORS

Interior personnel doors not described by the assembly categories listed above.

C1030 SPECIALTIES

C103001 COMPARTMENTS, CUBICLES AND TOILET PARTITIONS

This paragraph covers assemblies for individual compartments, cubicles, toilet partitions and urinal screens.

C103001 1.1 TOILET PARTITIONS

FS A-A-60003. Provide toilet compartments at multi-fixture toilet rooms of Type I, Style B-Ceiling Hung, C-Overhead Braced, or F-Overhead braced-alcove. Reinforce panels to receive partition-mounted accessories. Steel and Plastic toilet partitions shall have a recovered materials content of 20 to 30 percent.

C103001 1.2 URINAL SCREENS

FS A-A-60003. Type III, Style A, floor supported and wall hung or Style D, wall hung. Wall hung urinal screens shall be secured with continuous flanges to urinal screen and wall.

C103001 1.3 HARDWARE AND FITTINGS

Chrome-plated or stainless steel door latches and coat hooks. Provide one coat hook per compartment door. Latches and hinges for handicapped compartments shall comply with UFAS & ADAAG.

C103001 1.4 FINISHES

Finishes shall comply with FS A-A-60003. Use only one type of partition per building.

a. Metal toilet partitions and urinal screens shall be made of stainless steel.

b. Solid plastic partitions shall be fabricated of polymer resins (polyethylene) formed under high pressure forming a single component section one inch thick. Color shall extend throughout the panel thickness.

C103002 TOILET AND BATH ACCESSORIES

This paragraph covers toilet and bath accessories including, but not limited to, soap dispensers, paper holders, towel receptacles, grab bars, and bathroom mirrors.

C103002 1.1 TOILET AND BATH ACCESSORIES

C103002 1.1.1 Toilet Tissue Dispensers

FS A-A-2524. Provide units, Type I, II, or III, of stainless steel. Provide one double-roll dispenser per toilet compartment, unless otherwise indicated.

C103002 1.1.2 Paper Towel Dispensers

FS A-A-2380. Provide one per pair of sinks in toilet rooms without electric hand dryers, and one per room with electric hand dryers, unless otherwise indicated.

C103002 1.1.3 Combination Paper Towel Dispenser / Waste Receptacle

Provide a recessed or semi-recessed type and be constructed of 22-gage stainless steel. Provide one per pair of sinks, unless otherwise indicated.

C103002 1.1.4 Sanitary Napkin Disposal Units

Units shall be toilet partition or wall mounted of not less than 22 gage stainless steel, with top and bottom hinged access doors. Provide one in each Woman’s toilet stall, unless otherwise indicated.

C103002 1.1.5 Medicine Cabinets

Provide units with plate or float glass mirrors on doors. Provide doors and frames of 16-gage steel with a continuous piano hinge and flush magnetic latch.

C103002 1.1.6 Towel Bars

Provide stainless steel towel bars with a minimum thickness of 0.015 inch (0.4 mm).

C103002 1.1.7 Grab Bars

Provide stainless steel grab bars per UFAS and ADAAG.

C103002 1.1.8 Robe Hooks

Provide stainless steel two-hook shape with integral wall flange, with a projection not less than 1-5/8 inches (41 mm).

C103002 1.1.9 Mirrors

Class 2, Style E, Grade 1, electro-copper plated, conforming to FS DD-M-411. Provide one manufactured framed mirror per sink, or one full-size mirror for all sinks, unless otherwise indicated.

C103002 1.1.10 Soap Dispensers

Provide one soap dispenser per two sinks, with mechanical action dispensing valve. Do not mount soap dispenser on mirror.

C103002 1.1.11 Electric Hand Dryer

FS W-H-50. Provide one unit per three sinks, unless otherwise indicated.

C103003 MARKER BOARDS AND TACK BOARDS

This paragraph covers all marker boards, tack boards and fastening devices.

C103003 1.1 MATERIALS

a. Porcelain Enamel - Marker board writing surface shall be composed of porcelain enamel fused to a nominal 28 gage thick steel sheet, laminated to a 1/4-inch (6.35 mm) thick core material with a steel or foil backing sheet.

b. Cork shall be a continuous resilient sheet made from soft, clean, granulated cork, relatively free from hardback and dust and bonded with a binder suitable for the intended purpose. The cork sheet shall have a tensile strength of not less than 40 PSI (275.8 kPa) when tested in accordance with ASTM F 152.

c. Tack-board Covers - Provide woven fabric or vinyl wall covering over cork tack surface.

d. Aluminum - Aluminum frame extrusions shall be alloy 6063-T5 or 6063-T6, conform to ASTM B 221, and be a minimum of 0.06 inches (1.5 mm) thick.

e. Hardwood - Exposed hardwood for frames, cabinets and cases shall be oak, walnut or mahogany, with a factory applied stain and lacquer finish.

f. Glass - Provide tempered glass in accordance with ANSI Z97.1 and in conformance with ASTM C 1048.

C103003 1.2 PRESENTATION BOARD

The presentation board shall be a laminate covered wall-hung cabinet with lockable doors. Doors are to be attached to the cabinet with continuous piano hinges, and have a catch or closure to keep doors closed when not in use. The interior of the cabinet shall contain a porcelain enamel marker board writing surface with chalk-tray, a flip chart that can be hung on an interior door panel, and fabric covered tack surface on the interior door panels.

a. Marker Board - Marker board shall be a factory assembled, one-piece unit, and have a 28 gauge nominal steel porcelain enamel writing surface and a chalk-tray with end closure. Frame shall be aluminum, powder-coated steel, oak, walnut or mahogany.

b. Tack Board - Tack boards shall consist of a minimum 1/4-inch (6.35 mm) thick natural cork laminated to a minimum 1/4-inch (6.35 mm) thick hardboard, shall have an oak or aluminum frame, and be vinyl or fabric covered. Covers shall have a Class 'A' flame spread rating of 0-50, and a smoke developed rating of 0-450 in accordance with ASTM E 84.

C103004 IDENTIFYING DEVICES

This paragraph covers all signs, plaques, and traffic markers.

C103004 1.1 ASSEMBLIES

The signage system assemblies shall consist of three primary elements; a structural rail (with coordinating rail joiners to increase sign height in the field), removable copy inserts, and interlocking end caps or frame, and trim.

C103004 1.1.1 Inserts

The signage rails shall be designed as to accept ABS plastic signage inserts.

C103004 1.1.1.1 Insert Fabrication

The insert is the signage member to which message signage copy in the form of letters, numbers, and symbols shall be applied, and shall be interchangeable with similar sized rails of any other sign of equal or greater width and height. The ends of the rail and insert assembly shall be enclosed by end caps of prefinished 6064T5 extruded aluminum. Inserts shall be fabricated from 0.090 minimum ultra-violet resistant thickness extruded ABS Acrylic sheet core with 20.003 polycarbonate non-glare clear cap bonded to the core during the extrusion texturing process.

C103004 1.1.2 End Caps

End caps shall be injection-molded ABS plastic with integral color. The end caps shall be interchangeable to either end of each sign type, and any other similar sign of equal height. The end caps shall be interlocking mechanically with the inserts, and rail, requiring no tools for assembly. End caps shall utilize straight corners (instead of radius corners). Spring clips shall be steel. Plastic spring clips are not acceptable.

C103004 1.1.3 Trim

Optional accessory top and bottom trim frames of prefinished (color as indicated 6063T5 extruded aluminum shall be provided to the signage types indicated.

C103004 1.1.4 Mounting

Mounting of the modular signage system shall include surface mounting with screw-on applications for interior and exterior walls and on selected doors as indicated, at the locations indicated, and other mounting devices as

C103004 1.1.5 Graphics Application

a. Tactile Letters and Symbols

Chemically weld tactile letters and symbols to front surface of signage inserts where indicated and where required by UFAS and ADAAG. Tactile letters and symbols shall be sized as indicated.

b. Braille

Grade II Braille. Provide Grad II Braille inlaid strip as indicated to match sign color.

C103004 1.2 ALUMINUM ALLOY PRODUCTS

Provide ASTM B 209 for aluminum sheet or plate, ASTM B 221 for aluminum extrusions and ASTM B 26/B 26M or ASTM B 108 for aluminum castings. Provide aluminum extrusions at least 1/8-inch (3.2 mm) thick and aluminum plate or sheet at least 16 gage thick. Provide aluminum castings of solid aluminum cast certified by AA 46 alloy designation B443.0. Where anodic coatings are specified, alloy shall conform to Aluminum Association’s alloy designation 514.0 or A514.0.

C103004 1.2.1 Aluminum Finishes

Provide exposed aluminum finishes with either mill finish, factory finished with anodic coating or organic coating. Anodized finishes shall conform to AA 45, Architectural Class I or II, with a coating thickness 0.7 mil or thicker. Organic coatings shall be a baked enamel finish with a dry film thickness not less than 1.2 mils, conforming to AAMA 605.2.

C103004 1.3 STEEL PRODUCTS

Provide ASTM A 36/A 36M for structural steel, ASTM A 167 for sheet and plates.

C103004 1.4 CAST METAL

a. Cast Aluminum, ASTM B 108

b. Cast Bronze, ASTM B 62

C103004 1.5 GLASS

ASTM C 1036, Type 1, Class 1, Quality q3

C103004 1.6 FIBER-REINFORCED POLYESTER (FRP)

ASTM D 3841, Type II, Grade 1

C103004 1.7 ACRYLIC SHEET

ASTM D 4802, Type III

C103004 1.8 POLYCARBONATE SHEET

SAE AMS 3611

C103004 1.9 EXTERIOR POST AND PANEL SIGNS

C103004 1.9.1 Posts and Panels

Provide one-piece extruded aluminum posts with not less than 0.125 inch (3.2 mm) wall thickness. Posts shall permit attachment of panel framing system. Provide cap for each post. Panel framing system shall consist of aluminum extrusions and interlocking track components designed to interlock with concealed fasteners. Panels shall be fabricated of rectangular extruded tubular aluminum with a minimum wall thickness of 0.125 inches. Panels shall be removable and interchangeable. Posts shall be embedded in solid concrete foundation.

C103004 1.9.2 Illumination

Provide concealed lighting within panel framing members. Provide T-12 slim-line lamps. Ballast shall be integrally mounted with high power factor and rated for use in up to minus 20 degrees F (minus 29 degrees C) ambient starting temperature.

C103005 LOCKERS

C103005 1.1 STEEL CLOTHING LOCKERS

C103005 1.1.1 FS AA-L-00486 (Rev J), enameled steel.

Provide ventilated, Single Tier Units (unless multi-tier permitted by Project Program), fully framed. Provide galvanized or galvaneal shelves and bottoms for all lockers, and fully galvanized or galvaneal lockers in locker spaces adjoining shower rooms. Provide full height door stiffeners.

C103006 SHELVING

Assemblies include all types of shelving with brackets and all supporting materials and finish, if required.

C103007 FIRE EXTINGUISHER CABINETS

Cabinet shall be constructed of 16 gauge cold-rolled steel door panel / front, and a 22 gauge cold-rolled steel tub. Cabinet shall be semi-recessed in new construction and surface-mounted in new mechanical/electrical spaces and existing wall construction. Cabinet shall be fire-rated if located in a fire rated wall assembly, and have a full-length piano hinge, and baked enamel finish. Provide a stainless steel cabinet door if cabinet is exposed to the environment. Size and locate fire extinguisher cabinets to encase extinguisher as required by NFPA 10 & 101.

C103008 COUNTERS

C103008 1.1 LAMINATE COVERED COUNTER TOPS

Fabricate with lumber and a core of exterior grade plywood (A-C Grade) or particleboard (ANSI A208.1, Grade 1-M-2 or better), glued and screwed to form an integral unit. Bond laminated plastic under pressure to exposed surfaces using manufacturer's recommended glue.

a. Countertops shall be constructed to meet "Custom" quality grade as defined in AWI Quality Standards.

b. Finish shall meet NEMA LD 3, Grade PF 42 for plastic laminate.

C103008 1.2 ACRYLIC COUNTER TOPS

Provide 100% acrylic counter tops for use in non-residential construction.

Solid surfacing material shall consist of 100% pure acrylic polymer, mineral fillers, and pigments. The material shall be homogenous, not coated or laminated. Superficial damage to a depth of 0.010 inch (.254 mm) shall be repairable by sanding or polishing. Install with factory recommended fasteners/adhesives/sealant. Provide the following performance characteristics:

a. Tensile strength, ASTM D 638: 5800 psi minimum

b. Hardness, ASTM D 2583: Barcol Impressor 55 minimum

c. Flammability, ASTM E 84: Class I/A, flame spread 25 maximum; smoke developed 30 maximum

d. Thermal Expansion, ASTM D 696:.00002 in/in/F maximum

e. Boiling water resistance, NEMA LD 3: No effect

f. High temperature resistance, NEMA LD 3: No effect

g. Liquid absorption, ASTM D 570 (24 hours): 0.10 percent maximum

h. Mold and mildew growth, ASTM G 21: No growth, no effect

i. Bacteria growth, ASTM G 22: No growth, no effect

j. Sanitation, NSF 51: "Food Contact" approval for food area applications

k. Impact resistance, NEMA LD 3 (1/2 lb. ball drop): 1/4 inch material, 36 inch drop, no failure 1/2 inch material, 120 inch drop, no failure

C103009 CABINETS

This paragraph includes casework items that are permanently fixed in-place. Included are all cabinetry and millwork items with their associated accessories and anchoring devices.

C103009 1.1 WALL AND BASE CABINETS

Wall and base cabinets shall be of the same construction and appearance, with solid ends and frame fronts, or with frames all around. Frames shall

be not less than 3/4 inch by 1 1/2 inches (19 mm by 38 mm) hardwood. All ends, bottoms, backs, and partitions shall be hardwood plywood. Cabinet doors and drawer fronts shall be a minimum 3/4 inch (19 mm) of either plywood or medium density fiberboard cores with solid edge bands.

C103009 1.1.1 Quality Standards

Wall and base cabinets shall be constructed to meet “Custom” quality grade as defined in AWI Quality Standards, except where this specification exceeds AWI Custom.

C103009 1.1.2 Hardware

Provide cabinet hardware including two self-closing hinges for each door and two side-mounted metal drawer slides for each drawer and pulls for all doors and drawers as follows. All cabinet hardware exposed to view shall be ANSI/BHMA 156.9, Grade 1, and comply with the following requirements:

a. Concealed Euro-Style, back mounted hinges with opening to 165 degrees and a self-closing feature at less than 90 degrees.

b. Drawer slides shall have a static rating capacity of 100 lbs. (444 N).

c. Provide adjustable shelving standards with shelf support hardware for wall cabinets.

d. Provide heavy-duty magnetic latch and door and drawer catch

C103009 1.1.3 Finish

Provide plastic laminate (NEMA LD3) or transparent finish with sealer and varnish as selected by Designer of Record.

C103010 CASEWORK

This paragraph includes all built-in premanufactured metal cabinetry for specialized functions such as labs, libraries, medical and dental facilities. At a minimum, all casework shall conform to the following chart:

Metals	**Thickness and Material**
Uprights (all)	
Horizontal foot	4" x 2" tube, 14 ga. (.075") HRPO Steel
Vertical upright	6" x 2" tube, 11 ga. (.118") HRPO Steel
Leveler	Threaded steel with plastic foot and rubber boot
Bridge Channels	
Channel (halves)	14 ga. (.075") CQCR Steel
Utility Rails	

Top and Bottom Channels	18 ga. (.047") CQCR Steel
Covers	18 ga. (.047") CQCR Steel
Dividers	16 ga. (.059") CQCR Steel
End Brackets	22 ga. (.030") CQCR Steel
Top Stretchers	
Channel	14 ga. (.075") CQCR Steel
End Brackets	18 ga. (.047") CQCR Steel
Vertical Utility Chase	
Chase Assembly	
Upper Chase Cover	
Cover	16 ga. (.059") CQCR Steel
Middle Chase Cover	
Cover	16 ga. (.059") CQCR Steel
Lower Chase Cover	
Cover	16 ga. (.059") CQCR Steel
Attachment Bracket	11 ga. (.118") CQCR Steel
Chase Cover	
Panel	18 ga. (.047") CQCR Steel
Bridge Cover Extension	
Panel	18 ga. (.047") CQCR Steel
Chase Cabinet Filler	
Panel	18 ga. (.047") CQCR Steel
Cantilever	
Cantilever	11 ga. (.118") HRPO Steel
End Panel	
Outer Cover	11 ga. (.118") HRPO Steel
Inner Cover	20 ga. (.036") CQCR Steel
Angle Bracket	16 ga. (.059") CQCR Steel
Shelves	
Shelf (all)	16 ga. (.059") CQCR Steel
End Panels (all)	14 ga. (.075") CQCR Steel
Reinforcement Channel (Flat and	16 ga. (.059") CQCR Steel
Seismic Flat Shelves)	20 ga. (.036") CQCR Steel
Seismic Shelf Support Lip	
Laminate Overhead Storage Cabinets	
Hanger bracket	14 ga. (.075") CQCR Steel
Solid door pull	Steel, aluminum or zinc
Glass door pull	Steel
Glass door track	Aluminum
Reinforcing hat channel for shelf	11 ga. (.118") HRPO Steel
Steel Overhead Storage Cabinets	
Sides, Back and Door	20 ga. (.036") CQCR Steel
Top, Bottom and Shelf	18 ga. (.047") CQCR Steel
Hanger bracket	14 ga. (.075") CQCR Steel
Solid door pull	Steel, aluminum or zinc

Glass door pull	Steel
Glass door track	Aluminum
Reinforcing hat channel for shelf	11 ga. (.118") HRPO Steel
Laminate Storage and Sink Cabinets	
Drawer glides	Steel rails with ball bearings
Door hinges	Steel
Door and Drawer pulls	Steel, aluminum or zinc
Leveler bracket	11 ga. (.118") HRPO Steel
Leveler	Threaded steel with plastic foot and rubber boot
Reinforcing hat channel for shelf	11 ga. (.118") HRPO Steel
Steel Storage and Sink Cabinets	
Sides, Back and Top	20 ga. (.036") CQCR Steel
Base, Bottom and Shelf	18 ga. (.047") CQCR Steel
Door (interior and exterior panels)	20 ga. (.036") CQCR Steel
Drawer glides	Steel rails with ball bearings
Door hinges	Steel
Door and Drawer pulls	Steel, aluminum or zinc
Leveler bracket	11 ga. (.118") HRPO Steel
Leveler	Threaded steel with plastic foot and rubber boot
Reinforcing hat channel for shelf	11 ga. (.118") HRPO Steel
Cord Reel	
Cord Reel	11 ga. (.118") HRPO Steel
Cable Storage Tray	
Tray	24 ga. (.024") CQCR Steel
Phenolic Drying Rack	
Mounting brackets, in-line	14 ga. (.075") CQCR Steel
Mounting brackets, end-of-bench	14 ga. (.075") CQCR Steel
Modular Power Block with GFCI Receptacle	
Housing and back bracket	16 ga. (.059") CQCR Steel
Modular Connector Faceplates	
Faceplate	16 ga. (.059") CQCR Steel

Non-Metals	**Thickness and Material**
Laminate Worksurfaces	
Worksurface core	1.12" X 45 lb/cu ft medium density particle board
Top and bottom laminate (standard)	.012" thick laminate
Front edge banding	3mm thick rigid plastic
Side and back edge banding	1mm thick, flat profile rigid plastic

Chemsurf® Chemical-Resistant Laminate Worksurfaces

Worksurface core	1.12" X 45 lb/cu ft medium density particle board
Chemsurf ® (option)	VGP grade, resin-impregnated kraft paper
Front edge banding	3mm thick rigid plastic
Side and back edge banding	1mm thick, flat profile rigid plastic

Phenolic Resin Worksurfaces

Worksurface core	.75" thick, phenolic resin-impregnated kraft paper

Phenolic Drying Rack

Panel	1.00" thick, phenolic resin-impregnated kraft paper
Pegs	.38" dia x 5" long polypropylene pegs

Phenolic Drip Trough

Trough	1.00" thick, phenolic resin-impregnated kraft paper
Drain tube	.50" OD rigid phenolic tube
Drain flexible tube	.50" OD x 3' long flexible clear PVC tubing

Laminate Overhead Storage Cabinets

Panel core (Top, Bottom, Ends, Back, Door, Shelf)	.75" X 45 lb/cu ft industrial grade particle board
Laminate	.012" thick laminate
Cabinet edge banding	1mm thick, flat profile rigid plastic
Door edge banding	2mm thick, flat profile rigid plastic
Glass door	.25" thick tempered safety glass

Steel Overhead Storage Cabinets

Glass door	.25" thick tempered safety glass

Laminate Storage and Sink Cabinets

Panel core (Top, Bottom, Base, Ends, Back, Door, and Shelf)	.75" X 45 lb/cu ft industrial grade particle board
Laminate	.012" thick laminate
Cabinet edge banding	1mm thick, flat profile rigid plastic
Drawer/Door edge banding	2mm thick, flat profile rigid plastic
Drawer/Door stop	Rubber

Steel Storage and Sink Cabinets

Drawer/Door stop	Rubber

Power Block

Housing	Ultramid Nylon

Harness-to-Harness Connector

Housing	Ultramid Nylon

Duplex Receptacles

Housing	Ultramid Nylon

Modular Harnesses and Multipurpose Power Infeeds

Connector housing	Ultramid Nylon

Wire Manager

Channel	Rigid plastic

C103011 CLOSETS

This paragraph includes all built-in closets with associated work and finishes.

C103012 FIRESTOPPING PENETRATIONS

This paragraph covers fire-stopping assemblies to include sleeves, caulking and flashing. See PTS Section D40, *Fire Protection*, for additional requirements.

C103012 1.1 FIRESTOPPING

Provide asbestos-free firestopping material capable of maintaining an effective barrier against flame, gases and temperature. Provide non-combustible firestopping that is non-toxic to human beings during installation or during fire conditions. Devices and equipment for firestopping service shall be UL FRD listed or FM P7825 approved for use with applicable construction, and penetrating items.

C103012 1.1.1 Fire Hazard Classification

Material shall have a flame-spread of 25 or less, a smoke developed rating of 50 or less when tested in accordance with UL 723 or UL listed and accepted.

C103012 1.1.2 Firestopping Rating

Firestopping materials shall be UL FRD listed or FM P7825 approved for “F” and “T” ratings at least equal to the fire-rating of the fire wall in which penetrated openings are to be protected.

C103013 SPRAYED FIRE-RESISTIVE MATERIALS

See PTS Section D40, *Fire Protection*, for additional requirements.

C103013 1.1 SPRAYED FIRE-RESISTIVE MATERIALS

C103013 1.1.1 Quality Assurance

A pre-installation conference shall be held with the manufacturer’s approved installer prior to the application of the sprayed fire-resistive materials. See Paragraph C10 1.2 for field testing requirements for the fire-resistive material. Products provided shall not contain asbestos per 40 CFR 763.

C103013 1.1.2 Warranty

Contractor shall provide manufacturer’s standard materials and workmanship warranty stating that the manufacturer agrees to repair or

replace materials that fail within 2 years, or as required by the project program, from date of Substantial Completion.

C103013 1.1.3 Material Composition

Provide sprayed fire-resistive material consisting of factory-mixed, dry formulation of gypsum or Portland cement binders and light-weight mineral or synthetic aggregates mixed with water at the Project site, or provide sprayed-fiber fire-resistive material consisting of factory-mixed, dry formulation of inorganic binders, mineral fibers, fillers, and additives conveyed in a dry state by pneumatic equipment and mixed with water at a spray nozzle to form a damp, as-applied product.

C103013 1.1.4 Physical Properties

a. Dry Density: 15 lb/cubic foot (240 kg/cubic meter) for referenced fire-resistance design to attain the ratings indicated, per ASTM E 605.

b. Thickness: Provide minimum average thickness required for fire-resistance design indicated according to the following criteria, but not less than 0.375 inch (9 mm), per ASTM E 605:

1) Where the referenced fire-resistance design lists a thickness of 1 inch (25 mm) or greater, the minimum allowable individual thickness of sprayed fire-restive material is the design thickness minus 0.25 inch (6 mm).

2) Where the referenced fire-resistance design lists a thickness of less than 1 inch (25 mm) but more than 0.375 inch (9 mm), the minimum allowable individual thickness of sprayed fire-resistive material is the greater of 0.375 inch (9 mm) or 75 percent of the design thickness.

3) No reduction in design thickness is permitted for those fire-resistance designs whose fire-resistance ratings were established at densities of less than 15 lb/cubic foot (240 kg/cubic meter).

c. Bond Strength: 150 lb/sq. ft. (7.2 kPa) minimum per ASTM E 736.

d. Compressive Strength: 5.21 lb/sq. in. (35.9 kPa) as determined per ASTM E 761. Minimum thickness of sprayed fire-resistive material tested shall be 0.75 inch (19 mm) and minimum dry density shall be as specified, but not less than 15 lb/cubic foot (240 kg/cubic meter).

e. Corrosion Resistance: No evidence of corrosion per ASTM E 937.

f. Deflection: No cracking, spalling, or delaminating per ASTM E 759.

g. Effect of Impact on Bonding: No cracking, spalling, or delaminating per ASTM E 759.

h. Air Erosion: Maximum weight loss of 0.025 g/sq. foot (0.270 g/sq. meter) in 24 hours per ASTM E 859.

i. Fire-Test-Response Characteristics: Provide sprayed fire-resistive materials with the following surface-burning characteristics per ASTM E

84 by United Laboratories: flame-spread index of 10 or less and a smoke developed index of 0.

j. Fungal Resistance: No observed growth on specimens per ASTM G 21.

C103014 ENTRANCE FLOOR GRILLES AND MATS

Provide entrance mats at all entrances to the facility. Provide recessed entrance mats at building entrances with enclosed vestibule and or surface applied entranceway mats or entranceway floor tiles at all other entrances. Entranceway mats and entranceway floor tile require the use of a transition edge where he mat adjoins other floor materials. Mat system shall meet ASTM D-2047 coefficient of friction requirements for dry and wet surfaces. All portions of mat system shall comply with ASTM E 648, Class I for flammability and ASTM E 662 for smoke development of $\leq$ 450. Fasteners shall be non-corrosive screws and anchors for securing frames together to floors. Provide continuous vinyl bottom cushion to quiet clatter at recessed entrance mat systems. Hinges shall be flexible aluminum or thermoplastic hinge retained in aluminum tread port, and allow debris and moisture to flow through recessed mat. Provide ball and socket hinge for easy roll-up of recessed mat inserts for cleaning. Recessed entrance mat systems shall use either an aluminum or thermoplastic framework and shall have replaceable wearing surface inserts. Provide inserts as follows:

a. Carpet Inserts - Carpet insert fiber shall be colorfast, solution dyed, anti-static, anti-microbial, and waterproof. Fiber shall be 100% nylon or polypropylene. Each carpet fiber shall be bonded to rigid ply backing to prevent fraying and supplied in continuous splice-free lengths. Carpet shall be minimum of 30-oz./yd^2.

b. Vinyl or Rubber Inserts - Vinyl or rubber inserts shall be removable and be made from recycled materials wherever possible. Inserts shall have serrated edges for scraping purposed or flexible abrasive grit tape, bonded to a rigid vinyl tread insert.

C103014 1.1 RECESSED MAT THERMOPLASTIC FRAME PROPERTIES:

Thermoplastic frame shall be colorfast and UV-resistant. Tensile strength of frame shall comply with ASTM D 638. Tensile impact of frame shall comply with ASTM D 1822. Flexural strength of frame shall comply with ASTM D 790. Shore D hardness of frame shall comply with ASTM D 2240. Rockwell R hardness of frame shall comply with ASTM D 785. Coefficient of thermal expansion of frame shall comply with ASTM D 696.

C103014 1.2 RECESSED MAT ALUMINUM FRAME REQUIREMENTS:

Aluminum frame and rail shall comply with ASTM B 221, alloy 6063-T5. Frame shall have butted corners and be factory coated with zinc chromate or manufacturer's standard protective finish where surfaces are in contact with concrete. Provide standard mill finish, color anodized finish complying with AAMA 606.1, clear anodized finish complying with AAMA 607.1, or bronze complying with ASTM B455, alloy 385.

C103014 1.3 SURFACE MOUNTED/LOOSE-LAY ENTRANCE MATS.

Loose-lay mats shall have beveled vinyl or rubber transition edge and shall have surface of carpet or vinyl/rubber surfaces. Edges shall conform to ADA accessibility guideline 4.5.2, for loose-lay surface applications. Mats shall be easily removed yet remain adhered to floor to prevent mat from moving as pressure from walking is applied. Do not use carpet inserts unless directed otherwise.

C103014 1.4 SURFACE APPLIED ENTRANCEWAY FLOOR TILE

Applied entranceway floor tiles shall be in the form of carpet tiles, carpet tiles with vinyl or rubber scrubbing surfaces, or tiles of thermoplastic scrubbing surfaces only. Tiles shall be installed in areas where permanent mat is required but slab is not recessed to receive permanent recess mat. Tiles shall be securely installed without obvious seams, cleanable, dimensionally stable, and with maximum finished tile thickness of 1/2" above finished floor line. Carpet fibers shall 100% nylon or polypropylene, anti-static, anti-microbial, colorfast, solution dyed, mold and mildew resistant, and waterproof with minimum face weight of 30 oz/yd^2. Thermoplastic only tiles shall be PVC free and UV-resistant.

C103015 ORNAMENTAL METALWORK

Building components made from ornamental metals. Ornamental stair handrails are included in B1010 EXTERIOR STAIRS and PTS C20, *Stairs*.

C103090 OTHER INTERIOR SPECIALTIES

This paragraph covers other interior specialties not described by other assembly categories listed previously.

C103090 1.1 PROJECTION SCREEN

Motorized projection screen shall be wall, ceiling, or above ceiling mounting, and shall have a 120V motor that is lubricated for life, quick reversal type, has overload protector, integral gears, and preset accessible limit switches. Screen shall be flame retardant, mildew resistant and have black masked borders. Controls shall be wall mounted with wiring concealed within the wall construction. Pull-down projection screens shall be provided in lieu of motorized projection screens as approved by the Activity, as specified in the project program.

C103090 1.2 OTHER INTERIOR SPECIALTIES

Also see PTS Sections C20 and C30 for additional interior specialties not specified here.

-- End of Section --

SECTION C20

STAIRS
4/08

C20 GENERAL

C20 1.1 DESIGN GUIDANCE

Provide the design and installation in accordance with the following references. This Performance Technical Specification (PTS) adds clarification to the fundamental requirements contained in the following Government Standards. The general requirements of this PTS section are located in PTS Section Z10, *General Performance Technical Specification*.

Industry standards, codes, and government standards that are referenced in the section text that are **not** found in the Unified Master Reference List (UMRL) in the Construction Criteria Base (CCB) at the Whole Building Design Guide Website, are listed below for basic designation identification. Comply with the required and advisory portions of the current edition of the standard at the time of contract award.

C20 1.1.1 Industry Standards and Codes

AISC American Institute of Steel Construction

C20 1.1.2 Government Standards

UNIFIED FACILITIES CRITERIA (UFC)

UFC 03-100-10N, *Architecture*

UNIFIED FACILITIES GUIDE SPECIFICATIONS (UFGS)

C20 1.2 PERFORMANCE VERIFICATION AND ACCEPTANCE TESTING

Verification of satisfactory stair performance shall be via Performance Verification Testing, as detailed in this section of the RFP.

C20 1.2.1 Field Testing for Concrete

Field Quality Control Test Reports to be submitted to DOR shall comply with ACI 301. If concrete is found to be below the strength required in the tests, Contractor shall remove and replace that concrete and all associated building components at his own expense.

C20 1.3 DESIGN SUBMITTALS

Design Submittals shall be in accordance with Z10, *General Performance Technical Specifications*, UFGS section 01 33 10.05 20, *Design Submittal Procedures,* UFC 1-300-09N, *Design Procedures* and UFC 3-100-10N, Architecture.

C20 1.4 CONSTRUCTION SUBMITTALS

Submit construction submittals in accordance with PTS Section Z10, *General Performance Technical Specification.* In addition to the Z10 requirements the Designer of Record (DOR) shall approve the following construction submittals as a minimum:

Stairs, handrails.

C2010 STAIR CONSTRUCTION

C201001 INTERIOR AND EXTERIOR STAIRS

Provide primed and painted steel stairs with concrete filled pans or cast-in-place concrete stairs for industrial and commercial construction. Design load shall not be less than 100 PSF (4.8 kPa) for live load, and 300 pounds (136 kg) for concentrated loads. Fire stairs shall conform to NFPA 101. Provide steel guard and handrails.

C201001 1.1 STEEL STAIRS

Design shall conform to AISC S335 or AISC S342L.

C201001 1.1.1 Materials

a. Structural Carbon Steel - ASTM A 36/A 36M

b. Structural Tubing - ASTM A 500

c. Steel Pipe - ASTM A 47

d. Gratings - Gray cast iron ASTM A 48, Class 40

e. Metal plank grating, non-slip requirement, FS RR-G-1602 aluminum ASTM B 209, 6061-T6; steel ASTM A 653/ A 653M, G90.

f. Floor Plates, Patterned - ASTM A 786/A 786M, 14 gage.

g. Anchor Bolts - ASTM A 307

h. Galvanized Structural Steel - All steel exposed to the environment or direct water contact shall be galvanized in accordance with ASTM A 123 /A123M, ASTM A153/A153M, and ASTM A653/A653M, Z275 (G90) coating. Galvanize all components after fabrication in accordance with ASTM A385. Fabricate all steel components in the largest units practical using bolted connections for field assembly. Repair damage to, or voids in, galvanizing in accordance with ASTM A780, Annex A1 or Annex A3.

C201001 1.2 ALUMINUM ALLOY PRODUCTS

Conform to ASTM B 209 for sheet plate, ASTM B 221 for extrusions and ASTM B 26/B 26M or ASTM B 108 for castings. Aluminum extrusions shall be at least 1/8-inch (3.2 mm) thick and aluminum plate or sheet at least 0.050 inch (1.27 mm) thick.

C201001 1.3 FINISHES

C201001 1.3.1 Galvanizing

Hot-dip galvanizing: ASTM A 123/A123M, ASTM A 153/A 153M or ASTM A 653/A 653M, G90, as applicable.

C201001 1.3.2 Aluminum Finishes

Protect by plating, Class I anodic coatings, or 70% polyvinylidene fluoride organic coatings. See PTS Section C30 for additional coatings/finish information.

C201001 1.3.3 Safety Treads

NAAMM BG steel, Type W (welded).

C201001 1.3.4 Other Coatings

See PTS Section C30, *Interior Finishes*, for painted finishes.

C201001 1.4 CONCRETE STAIRS / STEPS

Provide interior or exterior concrete steps and stair with non-slip finish. For interior stairs, provide rubber or other finish treads. For exterior stairs, provide cast-in-place abrasive nosing. Provide steel guard and handrails as necessary. Fire stairs shall comply to NFPA 101.

C201001 1.4.1 Materials

a. Concrete - ACI 211.1, ACI 301/301M, and ACI 318/318M, with a compressive strength of 3,000 psi (20,680 kPa) or greater. Concrete Mix Design shall be suitable for the job conditions.

b. Reinforcements - Bars, fabrics, connectors, and chairs shall be galvanized.

c. Reinforcing Bars - ACI 301/301M

d. Welded Wire Fabric - ASTM A 185 or ASTM A 497

e. Cast Aluminum Safety Nosings – For exterior concrete stairs, provide safety nosings of cast aluminum with abrasive surfaces or with abrasive inserts.

C201002 FIRE ESCAPE STAIRS

Design fire escapes of the type and arrangement to conform to Fire Escape Stairs, of NFPA 101, *Life Safety Code*. Escape stairs shall be of steel or aluminum, conforming to the requirements of this specification section.

C201090 STAIR HANDRAILS, GUARDRAILS, AND ACCESSORIES

C201090 1.1 HANDRAILS

Design handrails in accordance with the IBC, except delete the handrail design load reduction code exceptions for residential, prisons, industrial, high hazard, and storage facilities. NAAMM PR, provide the same size rail and post. Provide series 300 stainless steel pipe collars. Factory coat all metal railings (except for ornamental metals such as brass, bronze, stainless steel, and nickel-silver) with a high performance coating in accordance with AAMA 2605, with a minimum coating thickness of 1.2 mils unless otherwise noted.

C201090 1.1.1 Steel Handrails

Provide steel handrails, including inserts in concrete, steel pipe conforming to ASTM A 53 or structural tubing conforming to ASTM A 500, Grade A or B of equivalent strength. Railings shall be hot-dip galvanized and shop painted for exterior applications and primed and shop painted for interior applications. Railing may be unpainted hot-dip galvanized in industrial areas.

C201090 1.1.2 Aluminum Handrails

Provide aluminum pipe railing conforming to ASTM B 429 or square aluminum semi-hollow tube conforming to ASTM B 221. Railings shall be coated with a high performance coating or anodized in accordance with AAMA 611, Class I.

C201090 1.1.3 Ornamental Handrails

Provide ornamental railings. Provide anchorage and fasteners as recommended by the product manufacturer. Railing system shall conform to ASTM E 985, minimum concentrated test load requirement.

C201090 1.2 METAL LADDERS

C201090 1.2.1 Metal Ladders

Provide vertical ladders conforming to Section 7 of 29 CFR 1910.27. Provide side hinged security door constructed of the same materials as the ladder. Provide heavy duty stainless steel hinges and lockable padlock hasp.

C201090 1.2.2 Installation

Offset distance from the rungs to the finished wall surface not less than 7 inches (175 mm). Provide heavy clip angles riveted or bolted to the stringer and drilled for not less than two 1/2-inch (12 mm) diameter expansion bolts as indicated. Provide intermediate clip angles not over 48 inches (1200 mm) on center.

C201090 1.2.3 Ladder Cages

Where the height of the ladder is greater than 20 feet (6000 mm), provide a cage to conform to 29 CFR 1910.27.

a. Cage fabrication – Provide attachments for fastening bands to the side rails of ladders or directly to the structure.

-- End of Section --

SECTION C30

INTERIOR FINISHES
4/08

C30 GENERAL

C30 1.1 DESIGN GUIDANCE

Provide the design and installation in accordance with the following references. This Performance Technical Specification (PTS) adds clarification to the fundamental requirements contained in the following Government Standards. The general requirements of this PTS section are located in PTS Section Z10, *General Performance Technical Specification*.

Industry standards, codes, and Government standards referenced in the section text that are **not** found in the Unified Master Reference List (UMRL) in the Construction Criteria Base (CCB) at the Whole Building Design Guide Website, are listed below for basic designation identification. Comply with the required and advisory portions of the current edition of the referenced standard at the time of contract award.

C30 1.1.1 Industry Standards And Codes

FLOOR COVERING INSTALLATION CONTRACTOR'S ASSOCIATION (FCICA)

FLOOR COVERING INSTALLATION BOARD (FCIB)

C30 1.1.2 Government Standards–

UNIFIED FACILITIES CRITERIA (UFC)

UFC 1-200-01, *General Building Requirements*

UFC 3-100-10, *Architecture*

UFC 3-120-10, *Interior Design*

UNIFIED FACILITIES GUIDE SPECIFICATIONS (UFGS)

UFGS 09 62 50.10, *Thin Film Flooring System for Aircraft Maintenance Facilities*

C30 1.2 QUALITY ASSURANCE

C30 1.2.1 Paint Applicator’s Qualifications

C30 1.2.1.1 SSPC QP 1 Certification

For the application of industrial coatings identified in the Project Program, all contractors and subcontractors that perform surface preparation or coating application shall be certified by the Society for Protective Coatings (formerly Steel Structures Painting Council) (SSPC) to the requirements of SSPC QP 1 prior to contract award, and shall remain certified while accomplishing any surface preparation

or coating application. The painting contractors and painting subcontractors must remain so certified for the duration of the project. If a contractor's or subcontractor's certification expires, the firm will not be allowed to perform any work until the certification is reissued. Requests for extension of time for any delay to the completion of the project due to an inactive certification will not be considered and liquidated damages will apply. Notify the Contracting Officer of any change in contractor certification status.

C30 1.2.2 Aircraft Maintenance Hangar Flooring Installer Qualifications

The Designer of Record shall utilize UFGS Specification Section 09 62 50.10, *Thin Film Flooring System for Aircraft Maintenance Facilities*, to provide the required installer qualifications for the floor coating system.

C30 1.3 PERFORMANCE VERIFICATION AND ACCEPTANCE TESTING

Verification of satisfactory interior finish assemblies' performance shall be via Performance Verification Testing, as detailed in this section of the RFP.

C30 1.3.1 Provide sample of textured ceiling application for DOR approval before resuming work. Sample shall be used as a reference for remaining application.

C30 1.3.2 Provide sample of multicolor paint application for DOR approval before resuming work. Sample shall be used as a reference for remaining application.

C30 1.3.3 Provide sample of terrazzo floor application for DOR approval before resuming work. Sample shall be used as a reference for remaining application.

C30 1.4 DESIGN SUBMITTALS

Design Submittals shall be in accordance with Z10, *General Performance Technical Specifications*, UFGS section 01 33 10.05 20, *Design Submittal Procedures,* UFC 1-300-09N, *Design Procedures* and UFC 3-100-10N, *Architecture*.

In addition, UFGS sections listed below or in the body of the PTS text are to be used by the Designer of Record (DOR) as a part of the design submittal. If the UFGS products or systems are applicable to the project, the DOR shall edit these referenced UFGS sections and submit them as a part of the design submittal specification. Edit the specification sections in accordance with the limitations stated in PTS section Z10, *General Performance Technical Specifications*.

UFGS 09 62 50.10, *Thin Film Flooring Systems for Aircraft Maintenance Facilities*

C30 1.5 CONSTRUCTION SUBMITTALS

Submit construction submittals in accordance with PTS section Z10, *General Performance technical Specifications.* In addition to the Z10 requirements, the Designer of Record (DOR) shall approve the following construction submittals as a minimum:

Paint, Finish materials, Finish colors

Installation drawings for floors with carpet, tile, stone or terrazzo to include locations and details of seams, color and material transitions, details of divider strips, control joints, and crack control solutions.

Changes shall not be made to the finishes that are submitted and approved by the Government during the design phase. In the event that revisions may be required because of unforeseen conditions such as discontinued product, the revisions must be approved by the DOR and then submitted to the Government Interior Designer for approval before substitutions can be made.

C3010 WALL FINISHES

Interior wall finishes shall be moisture and mildew resistant, easily maintained, and suitable in accordance with industry standards for the architectural surface being finished. For painted wall finishes, refer to C3040 “INTERIOR PAINTING AND SPECIAL COATINGS”.

C301001 CONCRETE WALL FINISHES

C301001 1.1 SPECIAL OR ARCHITECTURAL FINISHES ON INTERIOR CONCRETE WALLS

Cast-in-place or pre-cast concrete wall finishes shall include, but are not limited to, abrasive blasted surfaces, colored surfaces, exposed aggregate, grooved surfaces, or tooled surfaces.

C301002 PLASTER WALL FINISHES

Veneer plaster shall be gypsum plaster veneer finish on gypsum base finishes, or cement plaster veneer finish on concrete or masonry. Refer to Section C3040 for paint system and gloss level.

C301002 1.1 GYPSUM PLASTER

Provide gypsum neat plaster or high strength gypsum plaster base coat conforming to ASTM C28. High strength gypsum plaster shall have a compressive strength of not less than 2,500 psi, when tested dry in accordance with ASTM C472.

C301002 1.1.1 High strength gypsum gaging plaster finish coat shall have a compressive strength of not less that 4,500 psi when tested dry in accordance with ASTM C472.

C301002 1.1.2 Provide gypsum molding plaster for ornamental plaster in accordance with ASTM C59.

C301002 1.1.3 Provide Keene’s cement finish coat conforming to ASTM C61.

C301002 1.1.4 Provide acoustical gypsum plaster finish coat conforming to ASTM E1042 Type I or II Class A, noncombustible.

C301002 1.2 CEMENT PLASTER

C301002 1.2.1 Portland cement plaster base coat in accordance with ASTM C150, gray portland cement. Use Type I when no special characteristics are required, Type II when plaster and stucco will be exposed to moderate sulfate (alkali) action, Type III when early strength is needed as in cold weather, and Type V when high resistance to sulfate is required.

C301002 1.2.2 Portland cement plaster finish coat in accordance with ASTM C150, gray portland cement Type I when no special characteristics are required, Type II when plaster and stucco will be exposed to moderate sulfate (alkali) action, Type III when early strength is needed as in cold weather.

C301002 1.2.3 Factory-mixed finish coat according to the manufacturer’s instructions.

C301003 GYPSUM WALLBOARD FINISHES

Conform to specifications, standards and requirements in accordance with Gypsum Association GA 214, GA 216 and GA 224. Provide asbestos free materials only. Provide Type X gypsum board in fire rated assemblies. Provide a foil back gypsum board when a vapor retarder is required.

C301003 1.1 REGULAR GYPSUM BOARD

ASTM C36/C36M and ASTM C1396/C1396M 1/2 or 5/8 inch (12.7 mm or 15.9 mm) thick in residential construction, and 5/8 inch (15.9 mm) thick in non-residential construction, tapered edges.

C301003 1.2 MOISTURE RESISTANT GYPSUM BOARD

ASTM C630/C630M, 1/2 or 5/8 inch (12.7 mm or 15.9 mm) thick in residential construction, and 5/8 inch (15.9 mm) thick in non-residential construction. Use in humid areas or spaces but not as a substrate in tiled areas where wall tile is exposed to direct moisture contact or condensation accumulation.

C301003 1.3 CEMENTITIOUS BACKING UNITS

ANSI A108.11 and ANSI A118.9, 5/8 inch (15.9 mm) thick; use as a substrate for ceramic tile in wet areas that are exposed to direct moisture contact or condensation accumulation for areas including, but not limited to, tubs, shower enclosures, saunas, steam rooms, gang shower rooms, and shower drying rooms. Provide screws specifically designed for use with cement panels.

C301003 1.4 IMPACT RESISTANT GYPSUM BOARD

Reinforced gypsum panel with imbedded fiber mesh or lexan backing, 5/8 inch (15.9 mm) thick, tapered edges, in accordance with Structural Failure Test; ASTM E695 or ASTM D2394 and Indentation Test; ASTM D5420 or ASTM D1037. Provide metal framing of 20-gauge minimum. Provide fasteners that

meet manufacturer requirements and specifications. Impact resistant gypsum board shall have a flame spread rating of 25 or less and a smoke developed rating of 50 or less, ASTM E84. Finish with a high strength plaster veneer. Refer to PTS C10 for further requirements on impact resistant wall construction.

C301003 1.5 JOINT TREATMENT

ASTM C475, Joint compound shall be specifically formulated and manufactured for use with and compatible with tape, substrate and fasteners as recommended by the manufacturer. Tape and finish gypsum board in accordance with ASTM C840, GA 214 and GA 216. Provide premanufactured joints at all structural expansion joints, crack control joints, and change of materials as recommended by the manufacturer and in accordance with GA 216.

C301003 1.6 FASTENERS

ASTM C514. Fasteners shall be compatible with each type of gypsum board material as recommended by the gypsum board manufacturer and in accordance with GA 216 and GA 224.

C301003 1.7 ACCESSORIES

ASTM C1047. Fabricate from corrosion protected steel or plastic designed for intended use. Accessories manufactured with paper flanges are not acceptable. Flanges shall be free of dirt, grease, and other materials that may adversely affect bond of joint treatment. Provide prefinished or job decorated materials. For predecorated gypsum board provide prefinished metal or plastic trim to match predecorated gypsum board. Install as recommended by GA 214, GA 216 and GA 224.

C301003 1.8 LEVEL OF FINISH

C301003 1.8.1 Tape and finish gypsum board in accordance with ASTM C840, GA 214 and GA 216. Plenum areas above ceilings shall be finished to GA 214, Level 1. Water resistant gypsum backing board, ASTM C630/C630M, to receive ceramic tile shall be finished to GA 214, Level 2. Walls to receive a heavy-grade wall covering or have textured finish before painting shall be finished to GA 214 Level 3. Walls without wall wash lighting to receive paint (MPI Gloss Level 2), light textures, or wall coverings shall be finished to GA 214 Level 4. Unless otherwise specified, all gypsum board walls, partitions shall be finished to GA 214 Level 5. Provide joint, fastener depression, and corner treatment. Do not use fiberglass mesh tape with conventional drying type joint compounds; use setting or hardening type compounds only. Provide treatment for water-resistant gypsum board as recommended by the gypsum board manufacturer.

C301003 1.8.2 Wherever gypsum board is to receive eggshell (MPI Gloss Level 3), semigloss (MPI Gloss Level 5), or gloss (MPI Gloss Level 6) paint finish, finish gypsum wall surface to GA 214 Level 5.

C301003 1.8.3 Where wall wash lighting will accent the flatness of the wall and surface irregularities in gypsum board joints, provide feature edge gypsum board and two coat joint compound fillers. Provide this

special joint treatment at up lighting, down lighting and horizontal lighting at the end of a passageway wall.

C301004 TILE AND TERRAZZO WALL FINISHES

C301004 1.1 CERAMIC TILE WALL SYSTEM FINISHES

Provide ceramic tile wall systems as defined in the Tile Council of America (TCA) handbook for ceramic tile installations suitable for the service requirements listed. Install systems in accordance with ANSI A108/A118 series standards. Colored grout with sealer shall be provided. Coordinate with ceramic bath accessories for modularity. Include all trim pieces, caps, stops, and returns to complete installation.

C301004 1.1.1 Ceramic Mosaic Wall Tile shall be a minimum of 1/4 inch (6 mm) thick and installed from floor to ceiling, unless otherwise noted.

C301004 1.1.2 Wall tile shall be glazed, matte glazed or unglazed finish. Refer to project program for tile type, pattern, and surface texture.

C301004 1.1.3 Porcelain wall tile shall be through color, polished or unpolished. Refer to project program for tile type, pattern, and surface texture.

C301004 1.1.4 Provide wall tile color and style selections a minimum of one grade above base grade.

C301004 1.1.5 Provide Designer accent tile, accent strips and accessory ceramic tile shapes as an integral part of the ceramic wall tile system.

C301005 1.1 CORNER GUARDS

C301005 1.1.1 Corner guards shall be 3/32 inch (2.4 mm) thick and shall cover 1 inch (25 mm) each side of corner at right angles. Corner guards shall be clear polycarbonate. Use in executive areas, office areas, and wall-covered areas subject to cart traffic as a minimum.

C301005 1.1.2 Corner guards shall be 3/32 inch thick and shall cover 2-1/2 inches (64 mm) each side of corner at right angles. Corner guards shall be through color polycarbonate or rubber. Use in corridors or other high traffic areas.

If protective wall components from paragraphs C301090 – 1.5 and 1.6 are provided, corner guards shall be from the same lot and color as protective wall components.

C301005 1.6 WAINSCOT CAP

C301005 1.6.1 Wainscot cap shall be satin-finished extruded aluminum approximately 3/4 inch (19 mm) high, feathered at bottom edge, with an approximate 3/16 inch (5 mm) exposed face on top edge, and grooved to receive the covering. Adhesive to install wainscot cap shall be of a type recommended by the manufacturer of the cap.

C301005 1.6.2 Wood wainscot cap shall be 3-1/2 by 3/4 inch (89 mm by 19 mm) solid hardwood, AWI Custom grade, with painted or stained finish. Profile shall be a molded shape.

C301006 ACOUSTICAL PANELS ADHERED TO WALLS

Acoustical wall treatment shall be acoustical panels, sound absorbing wall units, or acoustical wall systems. Acoustical panel system shall include manufacturer's standard concealed fasteners, splines, tracks, and other components necessary to complete the installation. Fire rating for the complete composite system shall be Class A, 200 or less smoke density and flame spread less than 25, when tested in accordance with ASTM E84.

C301006 1.1 ACOUSTICAL FABRIC COVERED WALL PANELS

C301006 1.1.1 Prefinished factory assembled wall panels shall consist of, seamless fabric covered fiberglass or mineral fiber core system. Perimeter edges shall be reinforced by an aluminum frame or a formulated resin edge hardener. Fabric covering shall be stretched free of wrinkles and then bonded to the edges and back or bonded directly to the panel face, edges, and back of panel a minimum distance standard with the manufacturer. Mounting shall be by manufacturer's standard concealed spline, mechanical fasteners, magnetic fasteners, hook and loop or adhesive mounting.

C301006 1.1.2 Stretched fabric wall panel system shall consist of continuous perimeter and butt seam mounting extrusions, site-fabricated and applied directly to the substrate. Facing fabric shall be stretched over core materials and attached without adhesives, nails, tacks, screws or tapes so that fabric may be removed and replaced with framework in place.

C301006 1.1.3 Fabric shall be seamless, 100% polyester or olefin or a blend of the two. Light fastness (fadeometer) shall be approximately 40 hours in accordance with AATCC 16.

C301006 1.1.3.1 Non-woven, embossed texture, or needle punched 100 percent polyester, minimum 12 ounces (340 g) per linear yard. Tear strength shall be minimum 25 pounds (11.25 kg) machine direction and minimum 40 pounds (18 kg) cross-machine direction in accordance with ASTM D1117. Tensile strength shall be minimum 50 pounds (22.5 kg) machine direction and minimum 75 pounds (34 kg) cross-machine direction in accordance with ASTM D5034.

C301006 1.1.3.2 Woven, minimum 2-ply 100 percent polyester or olefin, minimum 12 ounces (340 g) per linear yard. Tear strength shall be minimum 29 pounds (13 kg). Tensile strength shall be 150 pounds (68 kg) minimum in accordance with ASTM D5034.

C301006 1.1.3.3 Perforated vinyl covering with fabric backing, minimum 20 ounces (567 g) per linear yard total weight.

C301006 1.2 ACOUSTICAL WALL PANELS

Aspen wood fibers bonded together with an inorganic hydraulic cement binder, formed in a continuous process under heat and pressure. Nominal

overall panel thickness shall be 1 inch (25 mm). Noise Reduction Coefficient shall be not less than NRC 0.85 for Type C-40 and C-80 mounting.

C301090 OTHER WALL FINISHES

C301090 1.1 SOLID SURFACING WALL FINISHES

Solid surfacing material shall consist of 100% pure acrylic polymer, mineral fillers, and pigments. The material shall be homogenous, not coated or laminated, meeting ANSI Z124.3 and ANSI Z124.6 requirements. Superficial damage to a depth of 0.010 inch (.254 mm) shall be repairable by sanding or polishing. Provide manufacturer’s full range of colors and patterns. Flammability, ASTM E84: Class I/A, flame spread 25 maximum; smoke developed 30 maximum.

C301090 1.1.1 If used in a kitchen, solid surfacing wall finish shall extend from top of kitchen countertop to underside of wall cabinet.

C301090 1.1.2 Provide solid surfacing with factory recommended fasteners/adhesives/caulk to complete the installation.

C301090 1.2 DECORATIVE PANELING SYSTEM

Architectural paneling system applied to interior walls shall include associated furring, fastening, and trim to complete the installation. Wood paneling system finish shall be factory or field applied.

C301090 1.3 WOOD TRIM AND DETAILING FINISHES

Decorative panels, chair rail, standing and running trim, shall be of AWI custom grade hardwood with a painted or stained finish. Refer to C3040 ”INTERIOR PAINTING AND SPECIAL FINISHES” for finish system. Chair rail shall be a minimum of 3-1/2 inches (89 mm) high. Profile of chair rail shall be a molded shape. Wood trim shall include associated furring, fastening, adhesives and trim to complete the installation.

C301090 1.4 IMPACT RESISTANT PANEL OR WAINSCOT WALL FINISHES

The wall covering panel system, or wainscot, shall be an impact-resistant acrylic PVC sheet of a minimum 0.060 inch (1.5 mm) thickness in 4 foot by 8 foot (1219 mm by 2438 mm) sheets. The system shall be Class A (ASTM E84), UL listed, and chemical and stain resistant. It shall include all accessories, such as top caps, joint covers, and inside and outside corners, necessary for a complete installation. A full range of colors and textures shall be included. The wall panel system shall have coordinating color and pattern options for all components within the system. The wall panel system shall offer a 21 ounce (595 g) fabric backed vinyl wallcovering laminated to a 0.020 inch (.51 mm) rigid acrylic/PVC backing capped with 1 mil of protective film.

C301090 1.4.1 Impact Resistant Trim Finishes - Impact resistant chair or handrail system shall be a formed rigid PVC product. Chair or handrail shall be a minimum of 3 inches (76 mm) high and be mounted with concealed hardware. Chair or handrail system shall be chemical, stain, and bacteria resistant. Chair rail shall be UL classified, conforming to NFPA Class A

fire rating and ASTM D256-90b for impact strength of 30.2 ft-lbs/inch thick.

C301090 1.5 CORNER AND WALL GUARDS

Corner and wall guards shall be high-impact formed polyvinyl chloride a minimum of 0.078 inch (2 mm) with concealed mounting hardware and end closure. If used with an impact resistant panels system, the guards shall be from the same manufacturer as the impact resistant wall panel system, chair or hand rail system and shall include all accessories necessary for a complete installation. A full range of styles, colors and textures shall be included.

C3020 FLOOR FINISHES

Refer to C3040 “INTERIOR PAINTING AND SPECIAL FINISHES” for painted floor coatings.

C302001 TILE FLOOR FINISHES

Provide ceramic tile floor systems as defined in the Tile Council of America (TCA) handbook for ceramic tile installation and materials for the service requirements listed. Provide installation and materials in accordance with ANSI A108/A118 series standards, except do not use organic adhesives. Provide manufacturer’s full range of colors and styles. Tile shall be a minimum of one grade above base grade.

Mortar shall be Portland cement, ANSI A108.1A/1B/1C/ A118.1, Latex-portland cement, ANSI A108.5/A118.4 or Epoxy ANSI A108.6/A118.3.

Grout shall be factory sanded Portland cement, ANSI A108.10/A118.6, Latex-portland cement, ANSI A108.10/A118.7 or Epoxy ANSI A108.6/A118.3. Provide tile joint grout sealer on white, light colored areas that are routinely exposed to water and liquid cleaning materials, entrance areas, and areas that require a high degree of stain resistance, and as required by the manufacturer. Provide chemical resistant epoxy resin for kitchens and other areas where high resistance to staining and absorption are required, ANSI A118.3.

Slip resistant tile shall have a minimum Coefficient of Friction (wet and dry) of 0.6, ASTM C1028. Tile shall have smooth, non-slip or textured surface and a glazed or unglazed finish. Non-slip or textured surface required for tile in areas where there is excessive water or grease and oils such as kitchens, dining facilities, toilets, and in industrial and maintenance facilities.

C302001 1.1 CERAMIC GLAZED FLOOR TILES

Ceramic glazed floor tiles shall be a minimum of 5/16 inch (8 mm) thick with a minimum of 1/8 inch (3 mm) grout width with cushioned edge. Tile shall have a 0.5 to 3.0 percent water absorption rate, ASTM C373. Do not use in areas where there is excessive water or grease and oils such as kitchens, dining facilities, toilets, showers, shower drying rooms, building entrance areas, and in industrial and maintenance facilities.

C302001 1.2 CERAMIC MOSAIC UNGLAZED FLOOR TILES

Ceramic Mosaic unglazed floor tiles shall be a minimum of 1/4 inch (6 mm) thick with a maximum of 1/16 inch (1.6 mm) grout width with cushioned edge. Tile shall have less than a 0.5 percent water absorption rate, ASTM C373. Use in toilets, showers and shower drying rooms and locker rooms.

C302001 1.3 PORCELAIN FLOOR TILE

Porcelain floor tiles shall be a minimum of 5/16 inch (8 mm) thick with a maximum of 1/4 inch (6 mm) grout width with cushioned edge. Tile shall have a minimum breaking strength of 300 pounds (202 kg), ASTM C648 and a maximum absorption rate of 0.5%, ASTM C373. Use in lobbies, corridors, toilets, kitchens, dining facilities, and other areas with minimal maintenance requirements, high resistance to staining, absorption and high durability requirements. Tile shall be color through, impervious, unglazed or glazed finish with an unpolished, semi-polished, polished, or textured surface.

C302001 1.4 QUARRY FLOOR TILE

Quarry floor tiles shall be a minimum of 1/2 inch (12.7 mm) thick tiles with a maximum of 1/4 inch (6 mm) grout width. Tile shall have a minimum breaking strength of 350 pounds (158 kg), ASTM C648 and a maximum absorption rate of 3%, ASTM C373. Use in lobbies, corridors, kitchens, dining facilities, and other areas with high durability requirements. Use grout release for darker pigmented grout colors. Tile shall have a maximum of 3.0 percent water absorption rate when tested in accordance with ASTM C373. Non-slip, abrasive grain or textured surface required for tile in areas where there is excessive water or grease and oils. Tile shall consist of semi-vitreous, vitreous or clay material with smooth or textured surface and unglazed finish.

C302004 RESILIENT FLOOR FINISHES

All resilient flooring shall meet or exceed applicable ADA horizontal requirements. Each type of flooring shall be installed with recommended adhesive in accordance with the manufacturers’ written instructions. Installers shall be approved by the manufacturer in writing and shall have a minimum of 3 yrs experience for each type of flooring to be installed. A minimum of 2% total quantity for each type flooring, color and pattern shall be provided and stored within each building for future replacement and patching. Provide manufacturers full line of color and pattern selections, including multi-color patterns. Use the resilient floor finishes as identified in the Project Program or as directed below.

C302004 1.1 RESILIENT TILE FLOORING SYSTEM

C302004 1.1.1 Resilient vinyl composition tile (VCT) shall be commercial grade, asbestos free, with a nominal overall gauge of 1/8 inch (3 mm) and a wear layer thickness of 1/8 inch (3 mm) nominal. The tile shall be manufactured in accordance with Federal Specification SS-T-312B (1), Type IV, Comp. 1, Class 2, through pattern. Tile shall be finished in accordance with manufacturer’s written instructions.

C302004 1.1.2 Resilient static dissipative vinyl composition tile (SDT) shall be of commercial grade, asbestos free, with a nominal overall gauge of 1/8-inch (3 mm) and a wear layer thickness of 1/8-inch (3 mm) nominal;

with an antistatic additive. The SDT tile shall conform to ASTM F1066, Class 2 through pattern. The flooring shall be installed with recommended adhesive and accessories; and finished in accordance with the manufacturer’s written instructions. Use SDT floors in computer areas or areas with sensitive electronic where the Project Program requires tile.

C302004 1.1.3 Resilient vinyl tile shall be 0.1 inch (2.5 mm) thick, with a vinyl wear layer of 0.035 inches (.9 mm) and shall be planks or square tiles. It shall include a protective urethane finish for ease of maintenance and conform to ASTM E648, Type III, Class 1 and ASTM F1700, Class III. Provide vinyl tile that are easily cleaned with off-the-shelf products. Surface finishes requiring manufacturer supplied or special order cleaning solutions are not acceptable. Vinyl tile flooring shall have a marble, granite, stone, terrazzo or wood pattern. A manufacturer’s 10-year warranty is required.

C302004 1.1.4 Resilient rubber tile shall be 100% synthetic rubber with color through, slip resistance formulation, with a minimum base thickness of 0.125 inch (3.2 mm) and a minimum stud height of 0.024 inch (0.6 mm). Rubber tile shall conform to ASTM F1344, Class I and ASTM E648, Class 1. The product shall require no wax maintenance. A manufacturer’s 10-year warranty is required for a raised round or square surface profile. A manufacturer’s 5-year warranty is required for other surface textures with slip resistant formulation.

C302004 1.1.5 Resilient athletic rubber tile shall be 100% synthetic heavy rubber or recycled crumb rubber tile, 3/8 inch (9 mm) thick. Rubber tile shall conform to ASTM F1344 for recycled crumb rubber tile. The product shall require no wax maintenance. A manufacturer’s 2-year warranty is required. Use rubber tile flooring in weight and exercise rooms.

C302004 1.1.6 Resilient linoleum tile shall be made with natural raw materials including linseed oil, flour, and rosin or resin binders double calendared onto synthetic jute backing, ASTM F2034, Type I. Pattern and color shall extend throughout thickness of material. Gage shall be 0.10 inch (2.5 mm). Static load limit shall be 250 psi per ASTM F970. Seal linoleum using manufacturer’s recommended sealer for commercial application. The manufacturer's technical representative shall review and approve each typical sample application on-site prior to resuming the installation and shall spot check each 1,196 square yards (1000 square meters) for quality control. Work shall not commence on any portion of work until the manufacturer's technical representative renders approval on site. A manufacturer's 5-year warranty is required.

C302005 CARPETING

C302005 1.1 GENERAL

Installer(s) shall be approved by the manufacturer in writing. Carpet manufacturer shall be established and in good standing with the industry. A minimum of 5% total quantity for each color and pattern shall be provided and stored within the building for future replacement patching.

C302005 1.2 CARPET CONSTRUCTION

Provide carpet types based on Table I, “Carpet Construction Type by Facility.”

TABLE I - CARPET CONSTRUCTION TYPE BY FACILITY							
Facility Type	Tufted Cut Pile	Tufted Loop Pile	Tufted Cut and Loop	Tufted Tip Shear	Tufted Frieze	Woven Loop or Cut & Loop	Carpet tile
Administrative	-	X	X	X	X	X	X
Open Plan Offices	-	X	X	X	-	X	X
Private Offices	X	X	X	X	X	X	X
Corridors	-	X	X	X	-	X	X
Conference Rooms	X	X	X	X	X	X	X
Child Care Centers	-	X	-	-	-	-	X
Family Housing	X	X	-	-	-	-	-
Bachelor Officer’s Quarters	X	X	X	-	-	X	-
Bachelor Enlisted Quarters	-	X	-	-	-	X	X
Lodging Facilities	X	X	X	X	X	X	X
Training/Educational	-	X	X	-	-	X	X
Borders and insets	X	X	X	X	X	X	X

C302005 1.3 CARPET SEVERE WEAR SPECIFICATIONS

Provide carpet that complies with Table II, “Carpet Specifications for Severe Wear Classification.”

TABLE II – CARPET SPECIFICATIONS FOR SEVERE WEAR CLASSIFICATION					
Carpet Construction	Pile Fiber	Weight oz/SY (kg/m2) min. x.037	Pile Height in.(mm) min.	Gauge min.	Pile Density oz/cuyd (kg/m3) min.
Tufted Cut Pile	CF NYLON	32(1.18)	.175(4.45)	1/10	6600 (270)
Tufted Loop Pile	CF NYLON	26(0.82)	.120(3.05)	1/10	6600 (270)
Tufted Cut and Loop	CF NYLON	28(1.04)	.135(3.43)	1/10	7400 (303)
Tufted Tip Shear	CF NYLON	28(1.04)	.135(3.43)	1/10	7400 (303)
Tufted Frieze	CF NYLON	32(1.18)	.175(4.45)	1/10	6600 (270)
Woven Loop	CF NYLON	26(1.04)	.135(3.43)	1/8	7400 (303)
Woven Cut & Loop	CF NYLON	28(1.04)	.135(3.43)	1/8	7400 (303)

C302005 1.4 CARPET PILE FIBER

Provide one of the following:

a. 100% premium branded, yarn-dyed, Type 6.6 continuous hollow filament nylon

b. 100% premium branded, solution-dyed, Type 6 or Type 6.6 continuous hollow filament nylon

c. 100% premium branded, combination yarn died and solution-dyed, Type 6 or Type 6.6 continuous hollow filament nylon

C302005 1.5 CARPET BACKING REQUIREMENTS

a. Provide manufacturer’s standard high performance carpet backing.

b. Moisture resistant carpet backing shall pass the 24 hour British Spill Test.

c. Moisture proof carpet backing shall pass the 10,000 Impacts Test.

d. Provide moisture resistant carpet backing with an attached urethane cushion, minimum 18 lb. density.

e. Provide moisture proof carpet backing with integral high density cushion of thermoplastic, urethane, or PVC.

C302005 1.6 CARPET PERFORMANCE CHARACTERISTICS

a. Flammability: Carpet shall meet the Critical Radiant Flux Classification of not less than 0.45 W/sq. cm. when tested in accordance with ASTM E648. Carpet shall generate less than 450 rating when tested in accordance with ASTM E662

b. Static Control: Carpet shall include a permanent static control system to control static build-up to less than 3.0 KV in accordance with AATCC-134.

c. Dimensional Stability: Carpet shall be permanently dimensionally stable with no delamination of components or any edge raveling or zippering.

d. Colorfastness to Crocking: Not less than 4, wet and dry, per AATCC-165.

e. Colorfastness to Light: Not less than 4 after 40 AFU (AATCC fading units) per AATCC-16.

f. Antimicrobial Activity: Not less than 0.08-inch (2-mm) halo of inhibition for gram-positive bacteria; not less than 0.04-inch (1-mm) halo of inhibition for gram-negative bacteria; no fungal growth, per AATCC-174.

g. Provide carpets with recycled fiber content, and renewable material content in the attached cushion or backing materials certified by an independent testing agency.

h. Written Warranty: Lifetime commercial warranty for texture retention and edge raveling, zippering, delamination is required. Seam preparation and adhesives shall be recommended by the carpet manufacturer in accordance with the warranty.

i. Appearance Retention: Provide carpet with a multi-color pattern for excellent appearance retention and soil hiding characteristics.

j. Indoor Air Quality: Provide carpets that meet the criteria of the CRI "Green Label" Indoor Air Quality Testing Program.

C302005 1.7 CARPET INSTALLATION

Install carpet by one of the following methods in accordance the manufacturer's recommendations and in accordance with the Carpet and Rug Institute, CRI-104, *Standard for Installation Specification of Commercial Carpet*, compatible with the construction, backing, and pattern characteristics of each carpet provided.

a. Direct Glue Down Carpet Installation

b. Double Glue Down Carpet and Pad Installation

c. Carpet with Attached-Cushion Installation

d. Preapplied releasable "dry" adhesive system installation.

e. Stretch-In Carpet Installation with tack strips and pad

f. Stretch-In Installation with hook and loop system.

C302007 WALL BASE FINISHES

Provide a wall base for transition between floor and wall finish. If no other type of base is required, provide rubber or vinyl straight base at carpet installations, rubber or vinyl cove base at exposed concrete or resilient tile floors, and a base to match the floor material at hard surface tile floors, or as required in the project program.

C302007 1.1 RESILIENT WALL BASE FINISHES

C302007 1.1.1 All rubber wall base shall be 4 inch (100 mm) high and 1/8 inch (3.2 mm) thick as required unless indicated otherwise. The wall base shall include inside and outside corners and shall conform to ASTM F1861-98, Type TS. Provide wall base in rolls and not 4 foot lengths.

C302007 1.1.2 Flash-coved integral resilient sheet wall bases shall be installed in accordance with the manufacturers' printed instructions to include a cove stick having a minimum radius of 3/4 inch (19 mm) and finished with an approved cap strip.

C302007 1.2 TILE BASE FINISHES

Coordinate tile base with ceramic wall and floor tile for color, material match and modularity. Include all pre-manufactured trim pieces, special shapes, caps, stops, and returns to provide a complete installation.

Provide coordinating wall, base and floor tile for curb construction at showers.

C302008 STAIR FINISHES

C302008 1.1 RESILIENT STAIR TREADS, RISERS AND LANDINGS

Refer to C302004 for resilient landing finishes. Provide rubber risers to match treads or one piece tread/risers. Provide treads with raised patterns and visually impaired nosing inserts as required.

C302008 1.2 PORCELAIN STAIR TREADS, RISERS AND LANDINGS

Refer to C302001 for porcelain stair finishes. Provide treads with textured surfaces or raised patterns and visually impaired nosing inserts as required.

C302010 HARDENERS AND SEALERS

C302010 1.1 HARDENED AND SEALED CURE CONCRETE FLOORS

Harden and seal concrete floors in accordance with the finished floor manufacture requirements. Utilize other methods of concrete curing if the floor finish manufacturer does not recommend a chemical hardener or sealer. Concrete floors that can utilize a hardener-sealer and will be exposed to traffic shall receive a minimum of two coats of hardener-sealer curing agent for dust protection. These hardener-sealer-cured floors shall be finished with a curing agent that shall penetrate the concrete to permanently seal the floor against moisture and the penetration of contaminants. The curing agent shall be non-toxic, non-flammable, and non-combustible and shall be installed in accordance with the manufacturer’s printed instructions. The finished floor shall be dust-free.

C302011 RAISED ACCESS FLOORING

C302011 1.1 FLOORING SUPPORT SYSTEM

Design support system to allow for 360 degree clearance in laying out cable and cutouts for service to machines and so that panel and stringer together take up maximum of 2 inches (50 mm).

C302011 1.1.1 Pedestals, Shafts, and Caps

Provide pedestals of steel or aluminum, each capable of carrying 4,960 pounds (2250 kg) axial load without permanent deformation. Provide permanent factory applied corrosion resistant finish for pedestals made of ferrous materials. Provide base plate not less than 4 inch by 4 inch by 1/8 inches (100 mm by 100 mm by 3 mm) thick, welded to shaft of pedestal. Approved die-formed bases of equivalent load spreading capacity and bearing area may be provided in lieu of flat base plates. Provide shafts to support design loads. Provide Pedestal Caps designed to fit precisely over pedestal shafts and to interlock with panels and stringers to prevent tilting, rocking, or vibrating of panels when live load is applied. Provide pedestals with adjusting threads or other devices that will permit leveling of floor system with adjustment range of approximately 2 inches (50 mm). Provide lock nuts, set screws, or

other locking devices to positively lock final pedestal vertical adjustments in place, independent of floor panels. Do not use self-tapping screws, snap type connections, or spring-action lock-nuts. All adhesives used shall be as recommended by the manufacturer.

C302011 1.1.2 Stringers

Fabricate from rolled or formed galvanized steel conforming to ASTM A591/A592M. Incorporate interlocking pedestal and stringers in pedestal stringer system, providing positive seating of panels to prevent tilting, rocking, or vibrating of panels when live load is applied. Provide stringers that can be added or removed after floor is in place. Fasten end of each stringer and mid-point of each four foot stringer positively to pedestal heads, using manufacturer’s standard screws. Provide screws that are removable from top.

C302011 1.2 FLOOR PANELS

Provide interchangeable 24 inch by 24 inch (610 mm by 610 mm) square module panels capable of supporting design loads. Panels shall be of weight that can readily be removed and handled by one person using lifting tool furnished by access floor manufacturer. Panel finish surface to be Grade HW 120 high pressure plastic laminate conforming to NEMA LD. Use carpet tile over prefinished panels for office areas, or to transition areas where only part of the space is recessed for access floor.

a. Aluminum Panels - ASTM B85, SC84A, die-cast or extruded construction.

b. Steel Panels - Die-formed construction. Weld flat steel top sheet to one or more formed steel stiffener sheets. Provide zinc-coating conforming to ASTM A591/A591M, Class C, with manufacturer’s standard corrosive resistant finish. Wood and other combustible products are prohibited.

c. Cementitious or Concrete formed Steel Panels Entirely non-combustible steel shell and cementitious or concrete fill, corrosive resistant inside and out. Seal cut edges in accordance with manufacturer’s recommendations.

C302011 1.2.1 Gravity held panels with bolted stringer understructure

Fasten end of each stringer and mid-point of each four foot stringer positively to pedestal heads, using manufacturer’s standard screws. Provide screws that are removable from top.

C302011 1.3 GROUNDING

Ground access floor system for safety hazard and static suppression. Connection of access floor support system to building grounding electrodes is specified in another section of this RFP. Provide positive contact between components for safe, continuous electrical grounding of entire floor system. Total system resistance from wearing surface of floor to building grounding electrode shall be within the range of 0.5 megohms to 20,000 megohms for computer rooms, electronics offices, data centers and

control rooms, 0.2 megohms to 2.0 megohms for clean rooms and laboratories.

C302011 1.4 THRESHOLD(S)

Provide interior thresholds of nonferrous materials where flooring materials or floor levels change.

C302011 1.5 RAMPS

Provide ramps of required slip resistance and slope conforming to ATBCB ADA Title III.

C3030 CEILING FINISHES

Refer to C3040 “INTERIOR PAINTING AND SPECIAL COATINGS” for painted ceiling finishes.

C303001 ACOUSTICAL CEILING TILES AND PANELS

C303001 1.1 ACOUSTICAL CEILING PANELS

All acoustical ceiling panels shall be 24 inch by 24 inch (610 mm by 610 mm), with a minimum light reflectance of .75 (except as noted), Class A, flame spread 25 or less and smoke development of 50 or less, ASTM E84. All acoustical ceiling panels shall have minimum 60% recycled content except as noted. Acoustical ceiling panels shall conform to ASTM E1264. Provide square edge except as noted.

C303001 1.1.1 For typical open office areas, conference rooms, executive offices, provide non-asbestos mineral composition acoustical ceiling panels of Type III with factory-applied standard washable painted finish or Type IV with factory-applied plastic membrane-faced vinyl, Form: 1, 2, or 3. Provide reveal edge in lobbies, conference rooms and command suites; otherwise, provide square edge in all other locations to receive acoustical panels.

C303001 1.1.2 For typical humid areas such as toilets, kitchens, fitness and locker rooms, provide non-asbestos mineral or glass composition acoustical ceiling panels bonded with ceramic, moisture resistant thermo-setting resin, or other moisture resistant material with factory-applied standard washable painted finish; and recycled content: minimum of 40%.

C303001 1.1.3 For areas with very high humidity, heavy soiling, staining, impact abrasion, or limited security concerns, such as bachelor’s quarters, laundry rooms, or maintenance shops, provide Type V, Steel or Type VII, aluminum faces with white baked on enamel finish, and non-asbestos mineral composition absorbent backing,

C303001 1.1.4 For areas requiring a concealed grid system, provide non-asbestos mineral composition acoustical ceiling panels of Type III with factory-applied standard washable painted finish or Type IV with factory-applied plastic membrane-faced vinyl, Form: 1, 2, or 3; Size: 12 inch by 12 inch by 5/8 inch (305 mm by 305 mm by 19 mm), Edge: for concealed grid installation.

C303001 1.1.5 Provide NRC and CAC ratings as follows:

Type of space	Minimum NRC	Minimum CAC
Open Office Areas	.75	40-44
Conference Rooms, Classrooms	.60	35-39
Activity spaces, Lobbies, Corridors	.60	35-39
Executive offices	.60	35-39
Toilets	.50	35-39
Kitchens	.50	35-39
Fitness/Locker Rms	.50	35-39
All other spaces	.50	35-39

Base the tested NRC value on Mounting Type E-400 of ASTM E795.

C303002 GYPSUM WALLBOARD CEILING FINISHES

Conform to specifications, standards and requirements in accordance with Gypsum Association GA 214, GA 216 and GA 224. Provide asbestos free materials only. Provide featured edge gypsum board on all gypsum surfaces that flatness of joints will be visible, such as uplighted ceilings, window lighted ceilings, and as recommended by the manufacturer. Provide Type X gypsum board in fire rated assemblies.

C303002 1.1 REGULAR GYPSUM BOARD

ASTM C36/C36M and ASTM C1396/C1396M, 1/2 or 5/8 inch (12.7 mm or 15.9 mm) thick, tapered edge. Provide 5/8 inch (15.9 mm) for all projects except for single family residential, which may utilize 1/2 inch (12.7 mm) if other requirements, such as sound control, are met.

C303002 1.2 MOISTURE RESISTANT GYPSUM BOARD

ASTM C630/C630M, 1/2 or 5/8 inch (12.7 mm or 15.9 mm) thick, tapered edges. Use for ceilings in humid areas. Do not use as a substrate in tiled areas where tile will be exposed to direct moisture contact or condensation accumulation. Support moisture resistant gypsum board at 12 inches (305 mm) on center. Provide 1/2 inch (12.7 mm) for single-family residential projects only. Provide 5/8 inch (15.9 mm) for all other projects.

C303002 1.3 CEMENTITIOUS BACKING UNITS

ANSI A108.11 and ANSI A118.9, 1/2 or 5/8 inch (12.7 mm or 15.9 mm) thick; use for adhesive applied ceramic tile in wet areas (tubs, shower enclosures, saunas, steam rooms, gang shower rooms, or for shower areas with a veneer plaster finish. Support cementitious backing units at 12 inches (305 mm) on center. Provide screws specifically designed for use with cement panels.

C303002 1.4 IMPACT RESISTANT GYPSUM BOARD

Reinforced gypsum panel with imbedded fiber mesh or lexan backing, 5/8 inch (15.9mm) thick, tapered edges, in accordance with Structural Failure Test; ASTM E695 or ASTM D2394 and Indentation Test; ASTM D5420 or ASTM D1037. For use whenever gypsum board partitions are allowed for barracks, training facilities, and industrial facilities. Provide metal framing of 20-gauge minimum. Provide fasteners that meet manufacturer requirements and specifications. Impact resistant gypsum board shall have a flame spread rating of 25 or less and a smoke developed rating of 50 or less, ASTM E84. Finish with a high strength veneer plaster.

C303002 1.5 TEXTURED CEILING FINISH SYSTEM

Applied textured ceiling finish shall be plaster based. Refer to paragraph “C301002 – 1.1 GYPSUM PLASTER” for finish requirements.

C303002 1.6 JOINT TREATMENT

ASTM C475, Joint compound shall be specifically formulated and manufactured for use with and compatible with tape, substrate and fasteners as recommended by the manufacturer. Tape and finish gypsum board in accordance with ASTM C840, GA 214 and GA 216. Provide premanufactured joints at all structural expansion joints, crack control joints, and change of materials as recommended by the manufacturer and in accordance with GA 216.

C303002 1.7 FASTENERS

ASTM C514, Fasteners shall be compatible with each type of gypsum board material as recommended by the gypsum board manufacturer and in accordance with GA 216 and GA 224.

C303002 1.8 ACCESSORIES

ASTM C1047, Fabricate from corrosion protected steel or plastic designed for intended use. Accessories manufactured with paper flanges are not acceptable. Flanges shall be free of dirt, grease, and other materials that may adversely affect bond of joint treatment. Provide prefinished or job decorated materials. Install as recommended by GA 214, GA 216 and GA 224.

C303002 1.9 LEVEL OF FINISH

C303002 1.9.1 Tape and finish gypsum board in accordance with ASTM C840, GA 214 and GA 216. Ceilings to receive a heavy-grade wall covering or heavy textured finish before painting shall be finished to GA 214, Level 3. Ceilings without critical lighting to receive flat paints, light textures, or wall coverings shall be finished to GA 214, Level 4. Unless otherwise specified, all gypsum board walls, partitions and ceilings shall be finished to GA 214, Level 5. Provide joint, fastener depression, and corner treatment. Do not use fiberglass mesh tape with conventional drying type joint compounds; use setting or hardening type compounds only. Provide treatment for water-resistant gypsum board as recommended by the gypsum board manufacturer.

C303002 1.9.2 Wherever gypsum board is to receive eggshell, semigloss or gloss paint finish, or where severe, up or down lighting conditions occur, finish gypsum wall surface to GA 214 Level 5. In accordance with GA 214 Level 5, apply a thin skim coat of joint compound to the entire gypsum board surface, after the two-coat joint and fastener treatment is complete and dry.

C303005 SUSPENSION SYSTEMS

C303005 1.1 EXPOSED SUSPENDED ACOUSTICAL CEILING GRID

Provide 24 inch by 24 inch (610 mm by 610 mm) aluminum or steel non-corroding intermediate-duty standard grid system for lay-in acoustical panels (ASTM C635). Finish shall be factory applied white baked enamel. Provide manufacturer’s hold down clips for fire rated assemblies and wall or edge molding. Hang grid system as recommended by manufacturer but with no less than 0.106 inch (2.7 mm) diameter wires (ASTM A641A, A641M, Class 1), or with one by 3/16 inch (4.76 mm) galvanized steel straps conforming to ASTM A653A, A653M (for light commercial zinc coating) or ASTM A366A, A366M (with an electrodeposited zinc coating, Type RS). Use ASTM A580/A580M, composition 302 or 304, condition annealed stainless steel, 0.106 inches (2.7 mm) in diameter over high humidity areas such as commercial kitchens and pools. Install suspended grid system with acoustical sealant (ASTM C843, nonstaining and ASTM C636). Recycled content shall be a minimum of 25%.

C303005 1.2 CONCEALED SUSPENDED ACOUSTICAL CEILING GRID

Provide 12 inch by 12 inch (305 mm by 305 mm) aluminum or steel non-corroding intermediate-duty concealed grid system for lay-in acoustical panels (ASTM C635). Finish shall be factory applied white baked enamel. Provide manufacturer’s wall or edge molding. Hang grid system as recommended by manufacturer but no less than with 0.106 inch (2.7 mm) diameter wires (ASTM A641A, A641M, Class 1), or with one by 3/16 inch (4.76mm) galvanized steel straps conforming to ASTM A653A, A653M (for light commercial zinc coating) or ASTM A366A, A366M (with an electrodeposited zinc coating, Type RS). Install suspended grid system with acoustical sealant (ASTM C843, nonstaining) and in accordance with ASTM C636. Recycled content shall be a minimum of 25%.

C303005 1.3 SUSPENDED AND FURRED CEILING SYSTEMS

ASTM C841 (for lath); ASTM C645 (for GWB).

Provide steel materials for metal support systems with galvanized coating per ASTM A653/A653M, G60; aluminum coating ASTM A463/A463M, T1-25; or a 55% aluminum-zinc coating. Provide suspended ceiling framing in accordance with ASTM C754, except framing members shall be 16 inches (400mm) unless otherwise noted.

C303006 METAL STRIP CEILINGS

Not used.

C303090 OTHER CEILING AND CEILING FINISHES

C3040 INTERIOR COATINGS AND SPECIAL FINISHES

The following coatings are applied directly to all surfaces of interior construction.

C304001 GENERAL REQUIREMENTS

All paint shall be suitable in accordance with the Master Painter Institute (MPI) standards for the interior architectural surface being finished. The current MPI, "Approved Product List" as of the date of contract award, will be used to determine compliance with the submittal requirements of this specification. The Contractor may choose to use a more current MPI "Approved Product List"; however, only one list may be used for the entire contract. All coats on a particular substrate, or a paint system, must be from a single manufacturer. No variation from the MPI Approved Products List is acceptable.

MPI PAINT SYSTEMS IDENTIFIED IN THE RFP TAKE PRECEDENCE OVER OTHER MPI SYSTEMS. IF THE RFP DOES NOT IDENTIFY A PAINT SYSTEM APPLICABLE TO ALL PAINTING OF THE FACILITY, UTILIZE THE MPI *ARCHITECTURAL PAINTING, INTERIOR SYSTEM* MANUAL TO IDENTIFY APPROPRIATE PAINT SYSTEMS. UTILIZE THE “PREMIUM GRADE” SYSTEMS AND COMPLY WITH ALL LIMITATIONS STATED IN THE MPI “APPROVED PRODUCTS LIST” FOR EACH SYSTEM. PRODUCTS HAVING AN MPI EPR 3 RATING SHALL BE GIVEN PREFERENTIAL CONSIDERATION OVER LOWER EPR RATINGS. THE HIGHER PERFORMING SYSTEMS SHALL BE USED UNLESS THE LOWER PERFORMING SYSTEMS CAN BE JUSTIFIED BASED ON LIFE CYCLE COSTS TO INCLUDE SURFACE PREPARATION, APPLICATION, DISPOSAL, ENVIRONMENTAL IMPACT, AND RECOATING CYCLES BASED ON EXPOSURE REQUIREMENTS. ONLY USE PAINT PRODUCTS THAT HAVE BEEN TESTED FOR THE MPI’S “DETAILED PERFORMANCE”. DO NOT USE PRODUCTS THAT HAVE BEEN TESTED ONLY FOR “INTENDED USE”.**C304001 1.1** MPI GLOSS LEVELS

Gloss levels shall comply with the MPI system of determining gloss as defined in the Evaluation sections of the MPI Manuals. Utilize the performance characteristics of the paint gloss and sheen to categorize paint rather than manufactures’ description of his product.

The MPI Gloss Levels are indicated by the notation G1, G2, G3, G4, G5, G6, or G7. Use G2 “Velvet-like” Flat for ceilings, residential walls away from human contact and low traffic areas. Use G3 “Eggshell-like” in high traffic areas for ceilings and walls, when human contact with the wall is limited, and for dark accent colors. Use G5 Semigloss for ceilings, walls, doors and trim for high durability and clean ability when a surface is expected to have human contact and is routinely touched. Use G6 Gloss only in special situations such as for piping identification or special effects. The MPI Gloss and Sheen Standard values are measured per ASTM D523, method D and are as follows:

Gloss Level Number	**Gloss@ 60 Degrees**	**Sheen@85 Degrees**
Gloss Level 1**(G1)** – Matte or Flat	Max.5 units	Max.10 units
Gloss Level 2**(G2)** – “Velvet-like” Flat	Max. 10 units	10-35 units
Gloss Level 3**(G3)** – “Eggshell-like”	Max. 10-25 units	10-35 units
Gloss Level 4**(G4)** - “Satin-like”	Max. 20-35 units	Min. 35 units
Gloss Level 5**(G5)** - Semi-Gloss	35-70 units	

Gloss Level 6**(G6)** – Gloss	70-85 units
Gloss Level 7**(G7)** – High Gloss	More than 85 units

C304001 1.2 MPI SYSTEM DESIGNATIONS AND ABBREVIATIONS

The MPI coating system number in each Division is found in either the *MPI Architectural Painting Specification Manual* or the *Maintenance Repainting Manual* and defined as an interior system (INT/RIN).

a. INT designates an interior coating system for new surfaces.

b. RIN designates an interior coating system used in repainting projects or over existing coating systems.

c. DSD – the MPI short-term designation for Degree of Surface Degradation as defined in the Assessment sections in the *MPI Maintenance Repainting Manual.* Degree of Surface Degradation designates the MPI Standard for description and appearance of existing condition of surfaces to be painted. This DSD classification is used to determine the proper surface preparation necessary for painting.

d. DFT – The short-term designation for dry film thickness. DFT is the minimum acceptable depth or thickness of a coating or system in the dry state. The maximum acceptable DFT is not more than 50% greater than the minimum acceptable DFT (example... DFT = 2 mils, maximum DFT = 3 mils). The DFT indicated in the paint systems below relate to new coatings - MPI INT. MPI RIN will be less than the indicated DFT.

e. Paint System Abbreviations: BF - Block Filler; C – Clear coat; P – Primer coat; I – Intermediate coat; T – Topcoat.

C304001 1.3 SURFACE PREPARATION

Comply with the “Interior Surface Preparation” section of the *MPI Architectural Painting Specification Manual* or the Interior Surface Preparation” section of the *MPI Maintenance Repainting Manual*. All suggestive language such as “may” or “should” are deleted from the standard and “must” or “shall” inserted in its place. Suggestive language such as “recommended” or “advisable” is deleted from the standard and “require” or “required” inserted in its place. The results of these wording substitutions change this document to required procedures. For surface preparation, determine a MPI DSD Assessment of each surface and comply with the MPI Surface Preparation Requirements relating to the assessments.

C304002 CONCRETE FINISHES

C304002 1.1 New and uncoated existing, and Existing, previously painted, Concrete surfaces:

a. High Performance Architectural Latex, System DFT: 4 mils

1) MPI INT 3.1C-G2/RIN 3.1J-G2 (Flat); P: MPI 3, I: MPI 138, T: MPI 138

2) MPI INT 3.1C-G3/RIN 3.1J-G3 (Eggshell-like); P: MPI 3, I: MPI 139, T: MPI 139

3) MPI INT 3.1C-G5/RIN 3.1J-G5 (Semigloss); P: MPI 3, I: MPI 141, T: MPI 141

b. Institutional Low Odor / Low VOC Latex, System DFT: 4 mils

1) MPI INT 3.1M-G3/RIN 3.1L-G3 (Eggshell-like); P: MPI 3, I: MPI 145, T: MPI 145

2) MPI INT 3.1M-G5/RIN 3.1L-G5 (Semigloss); P: MPI 3, I: MPI 147, T: MPI 147

C304002 1.2 New and uncoated existing and Existing, previously painted Concrete surfaces in toilets, food-preparation, food-serving, restrooms, laundry areas, shower areas, areas requiring a high degree of sanitation, and other high humidity areas unless otherwise specified, (Fill all holes in masonry surface):

a. Waterborne Light Industrial Coating, Not for human or abrasive contact areas, System DFT: 4.8 mils

1) MPI INT 3.1L-G5/RIN 3.1C-G5 (Semigloss); P: MPI 153, I: MPI 153, T: MPI 153

b. Alkyd, System DFT: 4.5 mils

1) MPI INT/RIN 3.1D-G5 (Semigloss); P: MPI 3, I: MPI 47, T: MPI 47

c. Epoxy, System DFT: 4 mils

1) MPI INT 3.1F-G6/RIN 3.1E-G6 (Gloss); P: MPI 77, I: MPI 77, T: MPI 77

C304002 1.3 New and uncoated existing and Existing, previously painted concrete floors:

a. Latex Floor Paint, MPI INT/RIN 3.2A-G2 (Flat); System DFT: 5 mils, P: MPI 60, I: MPI 60, T: MPI 60

b. Epoxy, MPI INT/RIN 3.2M-G6 (Gloss), System DFT: 5 mils, P: MPI 77, I: MPI 77, T: MPI 77

C304003 CONCRETE MASONRY FINISHES

C304003 1.1 New and uncoated Existing Concrete masonry:

a. High Performance Architectural Latex, System DFT: 11 mils

1) MPI INT 4.2D-G2 (Flat); BF: MPI 4, P: N/A, I: MPI 138, T: MPI 138

2) MPI INT 4.2D-G3 (Eggshell-like); BF: MPI 4, P: N/A, I: MPI 139, T: MPI 139

3) MPI INT 4.2D-G5 (Semigloss); BF: MPI 4, P: N/A, I: MPI 141, T: MPI 141

b. Institutional Low Odor / Low VOC Latex, System DFT: 4 mils

1) MPI INT 4.2E-G3 (Eggshell-like); BF: MPI 4, P: N/A, I: MPI 145, T: MPI 145

2) MPI INT 4.2E-G5 (Semigloss); BF: MPI 4, P: N/A, I: MPI 147, T: MPI 147

c. Multi-color, MPI INT 4.2H, BF: MPI 4, P: MPI 125, I: MPI 112, T: MPI 112, C: MPI 121

C304003 1.2 Existing, previously painted Concrete masonry:

a. High Performance Architectural Latex, System DFT: 4.5 mils

1) MPI RIN 4.2K-G2 (Flat); P: MPI 50, I: MPI 138, T: MPI 138

2) MPI RIN 4.2K-G3 (Eggshell-like); P: MPI 50, I: MPI 139, T: MPI 139

3) MPI RIN 4.2K-G5 (Semigloss); P: MPI 50, I: MPI 141, T: MPI 141

b. Institutional Low Odor / Low VOC Latex, System DFT: 4 mils

1) MPI RIN 4.2L-G3 (Eggshell-like); P: MPI 50, I: MPI 145, T: MPI 145

2) MPI RIN 4.2L-G5 (Semigloss); P: MPI 50, I: MPI 147, T: MPI 147

c. Multi-color, MPI INT 4.2E; BF: MPI 4, P: MPI 125, I: MPI 112, T: MPI 112, C: MPI 121

C304003 1.3 New and uncoated Existing Concrete masonry units in toilets, food-preparation, food-serving, restrooms, laundry areas, shower areas, areas requiring a high degree of sanitation, and other high humidity areas unless otherwise specified, (Patch imperfections and fill all masonry surface voids with block filler):

a. Waterborne Light Industrial Coating, Not human or abrasive contact areas, System DFT: 11 mils

1) MPI INT 4.2K-G5 (Semigloss); BF: MPI 4, P: N/A, I: MPI 153, T: MPI 153

b. Alkyd, System DFT: 12 mils

1) MPI INT 4.2N-G5 (Semigloss); BF: MPI 4, P: MPI 50, I: MPI 47, T: MPI 47

c. Epoxy, System DFT: 10 mils

1) MPI INT 4.2G-G6 (Gloss); BF: MPI 116, P: N/A, I: MPI 77, T: MPI 77

C304003 1.4 Existing, previously painted, concrete masonry units in toilets, food-preparation, food-serving, restrooms, laundry areas, shower areas, areas requiring a high degree of sanitation, and other high humidity areas unless otherwise specified (Patch imperfections and fill all masonry surface voids with block filler):

a. Waterborne Light Industrial Coating, Not for human or abrasive contact areas, System DFT: 4.5 mils

1) MPI RIN 4.2G-G5 (Semigloss); P: MPI 50, I: MPI 153, T: MPI 153

b. Alkyd, System DFT: 4.5 mils

1) MPI RIN 4.2C-G5 (Semigloss); P: MPI 50, I: MPI 47, T: MPI 47

c. Epoxy, System DFT: 5 mils;

1) MPI RIN 4.2D-G6 (Gloss); P: MPI 77, I: MPI 77, T: MPI 77

C304004 METAL FINISHES

C304004 1.1 New and Existing, previously painted steel/ferrous surfaces not otherwise specified:

a. High Performance Architectural Latex, System DFT: 5 mils

1) MPI INT 5.1R-G3 (Eggshell-like); P: MPI 79, I: MPI 139, T: MPI 139

2) MPI INT5.1R-G5 (Semigloss); P: MPI 79, I: MPI 141, T: MPI 141

b. Alkyd, System DFT: 5.25 mils

1) MPI INT 5.1E-G3 (Eggshell-like); P: MPI 79, I: MPI 51, T: MPI 51

2) MPI INT 5.1E-G5 (Semigloss); P: MPI 79, I: MPI 47, T: MPI 47

C304004 1.2 New and Existing, previously painted steel/ferrous surfaces in toilet, food preparation, food serving, restrooms, shower areas and areas requiring a high degree of sanitation and other high humidity areas not otherwise specified except floors, hot metal surfaces, and new prefinished equipment:

a. Alkyd, System DFT: 5.25 mils

1) MPI INT 5.1E-G5 (Semigloss); P: MPI 79, I: MPI 47, T: MPI 47

C304004 1.3 New and Existing, previously painted miscellaneous non-ferrous surfaces not otherwise specified:

a. High Performance Architectural Latex, System DFT: 5 mils. MPI INT 5.4F-G5 (Semigloss); P: MPI 95, I: MPI 141, T: MPI 141

b. Alkyd, System DFT: 5 mils. MPI INT 5.4J-G5 (Semigloss); P: MPI 95, I: MPI 47, T: MPI 47

C304004 1.4 New and Existing, previously painted miscellaneous galvanized doors not otherwise specified:

a. Epoxy, System, MPI INT 5.3D-G6 (Gloss); P: MPI 101, I: MPI 77, T: MPI 77

b. Alkyd, System DFT: 5 mils. MPI INT 5.3C-G5 (Semigloss); P: MPI 26, I: MPI 47, T: MPI 47

C304005 INTERIOR WOOD FINISHES

C304005 1.1 New and Existing, uncoated wood and plywood not otherwise specified:

a. High Performance Architectural Latex, System DFT: 4.5 mils

1) MPI INT 6.4S-G4 (Satin-like); P: MPI 39, I: MPI 140, T: MPI 140

2) MPI INT 6.4S-G5 (Semigloss); P: MPI 39, I: MPI 141, T: MPI 141

b. Alkyd, System DFT: 4.5 mils, MPI INT 6.4B-G5 (Semigloss); P: MPI 45, I: MPI 47, T: MPI 47

c. Institutional Low Odor / Low VOC Latex, System DFT: 4 mils

1) MPI INT 6.4T-G4 (Satin-like); P: MPI 39, I: MPI 146, T: MPI 146

2) MPI INT 6.4T-G5 (Semigloss); P: MPI 39, I: MPI 147, T: MPI 147

C304005 1.2 Existing, previously painted wood and plywood not otherwise specified:

a. High Performance Architectural Latex, System DFT: 4.5 mils

1) MPI RIN 6.4B-G4 (Satin-like); P: MPI 46, I: MPI 140, T: MPI 140

2) MPI RIN 6.4B-G5 (Semigloss); P: MPI 46, I: MPI 141, T: MPI 141

b. Alkyd, System DFT: 4.5 mils, MPI RIN 6.4C-G5 (Semigloss); P: MPI 46, I: MPI 47, T: MPI 47

c. Institutional Low Odor / Low VOC Latex, System DFT: 4 mils

1) MPI RIN 6.4D -G4 (Satin-like); P: MPI 39, I: MPI 146, T: MPI 146

2) MPI RIN 6.4D-G5 (Semigloss); P: MPI 39, I: MPI 147, T: MPI 147

C304005 1.3 New and Existing, previously finished or stained wood and plywood, except floors; natural finish or stained:

a. Natural finish, oil-modified urethane, System DFT: 4 mils, MPI INT 6.4J-G4/RIN 6.4L-G4 (Satin-like); P: MPI 57, I: MPI 57, T: MPI 57

b. Stained, oil-modified urethane, System DFT: 4 mils, MPI INT 6.4E-G4/RIN 6.4G-G4 (Satin-like); P: MPI 90, I: MPI 57, T: MPI 57

C304005 1.4 New and Existing, previously finished or stained wood floors; natural finish or stained:

a. Natural finish, oil-modified urethane, System DFT: 4 mils, MPI INT/RIN 6.5C-G6 (Gloss); P: MPI 56, I: MPI 56, T: MPI 56

b. Stained, oil-modified urethane, System DFT: 4 mils, MPI INT/RIN 6.5B-G6 (Gloss); P: MPI 90, I: MPI 56, T: MPI 56

C304005 1.5 New and Existing, uncoated wood surfaces in toilets, food-preparation, food-serving, restrooms, laundry areas, shower areas, areas requiring a high degree of sanitation, and other high humidity areas not otherwise specified:

a. Waterborne Light Industrial Coating, System DFT: 4.5 mils, MPI INT 6.3P-G5 (Semigloss); P: MPI 45, I: MPI 153, T: MPI 153

b. Alkyd, System DFT: 4.5 mils, MPI INT 6.3B-G5 (Semigloss); P: MPI 45, I: MPI 47, T: MPI 47

C304005 1.6 Existing, previously painted wood surfaces in toilets, food-preparation, food-serving, restrooms, laundry areas, shower areas, areas requiring a high degree of sanitation, and other high humidity areas not otherwise specified:

a. Waterborne Light Industrial Coating, (Not for human or abrasive contact areas) System DFT: 4.5 mils, MPI INT 6.3P-G5 (Semigloss); P: MPI 46, I: MPI 153, T: MPI 153

b. Alkyd, System DFT: 4.5 mils, MPI INT 6.3B-G5 (Semigloss); P: MPI 46, I: MPI 47, T: MPI 47

C304005 1.7 New and existing uncoated wood doors:

a. Alkyd, System DFT: 4.5 mils,

1) MPI INT 6.3B-G5 (Semigloss); P: MPI 45, I: MPI 47, T: MPI 47

C304006 GYPSUM WALL BOARD FINISHES

C304006 1.1 New and Existing, previously painted Gypsum Wallboard not otherwise specified (interior gypsum finish of exterior wall):

a. High Performance Architectural Latex, System DFT: 4 mils

1) MPI INT/RIN 9.2B-G2 (Flat); P: MPI 50, I: MPI 138, T: MPI 138

2) MPI INT/RIN 9.2B-G3 (Eggshell-like); P: MPI 50, I: MPI 139, T: MPI 139

3) MPI INT/RIN 9.2B-G5 (Semigloss); P: MPI 50, I: MPI 141, T: MPI 141

b. Institutional Low Odor / Low VOC Latex, System DFT: 4 mils

1) MPI INT/RIN 9.2M-G3 (Eggshell-like); P: MPI 50, I: MPI 145, T: MPI 145

2) MPI INT/RIN 9.2M-G4 (Satin-like); P: MPI 50, I: MPI 146, T: MPI 146

3) MPI INT/RIN 9.2M-G5 (Semigloss); P: MPI 50, I: MPI 147, T: MPI 147

c. Multi-color, MPI INT9.2G; P: MPI 125, I: MPI 112, T: MPI 112, Clear Coat: MPI 121

C304006 1.2 New and Existing, previously painted Gypsum Wallboard in toilets, food-preparation, food-serving, restrooms, laundry areas, shower areas, areas requiring a high degree of sanitation, and other high humidity areas not otherwise specified:

a. Waterborne Light Industrial Coating, (Not for human or abrasive contact areas) System DFT: 4 mils, MPI INT/RIN 9.2L-G5 (Semigloss); P: MPI 50, I: MPI 153, T: MPI 153

b. Alkyd, Use for metal or trim for a durable, hard finish. System DFT: 4 mils, MPI INT/RIN 9.2C-G5 (Semigloss); P: MPI 50, I: MPI 47, T: MPI 47

c. Epoxy, Use for high humidity areas requiring easy to clean enamel finishes. System DFT: 4 mils, MPI INT 9.2E-G6 (Gloss) / MPI RIN 9.2D-G6 (Gloss)P: MPI 50, I: MPI 77, T: MPI 77

C304007 SPECIAL COATINGS TO WALLS

C304007 1.1 HIGH PERFORMANCE ARCHITECTURAL COATING (HIPAC)

HIPAC shall be a durable, organic system applied to a continuous (seamless) high-build film and cure to a hard glaze finish. They shall be resistant to continuous heat and humidity, abrasion, staining, chemicals, and biological growth. Coating shall be installed as a complete system, and as recommended by the manufacturer and have a flame spread index of not more than 25 and a smoke developed index of not more than 50 when tested in accordance with ASTM E84.

C304007 1.1.1 Two-component, epoxy-polyamide shall be chemical and corrosion-resistant, adhesive, alkali-resistant, and water-tolerant for metal, wood, concrete, masonry surfaces, and painted surfaces where high gloss or glaze type finish, extreme workability and resistance to abrasion and stains is required. Minimum dry film thickness is 3 mils for each of two coats. Furnish Gloss or Semigloss finish. Maximum volatile organic compounds (VOC) shall be 340 grams/liter.

C304007 1.1.2 Single Component, Moisture-Curing Urethane shall be a flexible, abrasion- and impact-resistant, use for floors, walls, machinery, equipment and other surfaces where good abrasion resistance, color retention, gloss retention, graffiti resistance and good resistance to acids, alkalis, solvents, strong cleaners and sanitizers, fuel and chemicals are necessary. Can also be used on concrete floors, brick and masonry surfaces (properly conditioned), metals (properly primed), and

wood (properly prepared and sealed.) Minimum dry film thickness is 3 mils for each of 3 coats. Use Type I, Aliphatic, for exterior use except for oily or resinous exterior wood surfaces. Use Type II, Aromatic, for interior use.

C304007 1.2 IMPACT RESISTANT WALL FINISHES

Provide textured acrylic architectural coating system: a seamless textured acrylic water-based coating system, having a thickness of at least 20 mils, on surfaces scheduled to receive it. System shall be composed of pure acrylic polymers, silica dioxide, ethylene dioxide and pigments. System shall have a Barcoll Hardness Index of 35.0 or greater, a flame spread of 8.5 or less as determined by ASTM E84, smoke contribution of 7.0 or less, and have water vapor permeability of 27.5 English Perms or greater when tested in accordance with ASTM E96. (MPI 42)

Finish may only be installed by factory-qualified applicators in accordance with the manufacturer’s printed instructions and recommendations, to fulfill warranty requirements. All coating system components shall be products of the same manufacturer. A minimum of one sample wall application shall be provided. Upon approval of the sample wall by the project manager, the application shall serve as a standard for the remaining work. The manufacturer’s certified representative shall provide an on-site training demonstration of the application and care of the finish for the end-user’s facility manager or other representative.

-- End of Section --

SECTION D10

CONVEYING
4/08

D10 GENERAL

D10 1.1 DESIGN GUIDANCE

Provide the design and installation in accordance with the following references. This Performance Technical Specification (PTS) adds clarification to the fundamental requirements contained in the following Government Standards. The general requirements of this PTS section are located in PTS Section Z10, *General Performance Technical Specification*.

Industry standards, codes, and Government standards referenced in the section text that are **not** found in the Unified Master Reference List (UMRL) in the Construction Criteria Base (CCB) at the Whole Building Design Guide Website, are listed below for basic designation identification. Comply with the required and advisory portions of the current edition of the referenced standard at the time of contract award.

D10 1.1.1 Industry Standards and Codes

Although some the following references are listed in the UMRL, they are repeated here for emphasis.

ASME A17.1, *Safety Code for Elevators and Escalators*

ASME A17.2, *Guide for Inspection of Elevators, Escalators, and Moving Walks*

ASME A18.1, *Safety Standard for Platform Lifts and Stairway Chairlifts*

ASME B20.1, *Safety Standards for Conveyors and Related Equipment*

D10 1.1.2 Government Standards

NAVAL FACILITIES ENGINEERING COMMAND (NAVFAC)

ITG NAVFAC Elevator Design Guide (2001) – (This guide can be found at the following web address: http://www.wbdg.org/ccb/NAVFAC/INTCRIT/fy01_01.pdf)

D10 1.2 PERFORMANCE VERIFICATION AND ACCEPTANCE TESTING

Verification of satisfactory Conveying systems performance shall be via Performance Verification Testing, as detailed in this section of the RFP.

D10 1.2.1 Testing and Inspections for Elevators

a. All testing and inspections shall be conducted in the presence of both the Elevator Specialist and a NAVFAC Certified Elevator Inspector. The Elevator Inspector shall complete, sign and post the results of all tests and inspection results after successful completion of inspection and testing. The Contractor is responsible for all costs involved with reinspection and retesting required to correct discrepancies discovered during testing and the subsequent retesting required, including all costs and expenses incurred by the Government Furnished Inspector.

b. Testing Materials and Instruments

Provide testing materials and instruments required for final inspection, including a current equipment calibration certification.

c. Field Tests for Elevators

In addition to the tests required by ASME A17.1 AND ASME A17.2, perform the following:

1) Endurance Tests - Test each elevator for a period of one hour continuous run, with specified rated load in the car. Restart the one hour test period from beginning, following any shutdown or failure. During the test run, stop car at each floor in both directions of travel for standing period of 10 seconds per floor. The requirements for Rated Speed, Leveling, Temperature Rise, and Motor Amperes testing specified herein shall be met throughout the duration of the Endurance test.

2) Speed Tests - Determine actual speed of each elevator in both directions of travel with rated load and with no load in elevator car. Minimum acceptable elevator speed is the Rated speed specified. Maximum acceptable elevator speed is 110 percent of Rated speed.

3) Leveling Tests - Test elevator car leveling devices for landing accuracy of plus or minus 1/4-inch (6 mm) at each floor with no load in car, symmetrical load in car, and with rated load in car in both directions of travel. Car sill must be level with landing sills.

4) Temperature Rise Tests - Determine temperature rise of elevator hoisting motor, motor-generator, exciter, and booster during full-load test run for one hour minimum. Under these conditions, maximum acceptable temperature rise shall not exceed acceptable temperature rise indicated on manufacturer's data plate. Start test only when equipment is within 9 degrees F (5 degrees C) of ambient temperature.

5) Motor Ampere Tests - Measure and record motor amperage when motor is running and elevator is lifting at rated load and speed. Measure and record motor amperage at beginning and end of Endurance test. Test results must not exceed nameplate amperage when motor is running and elevator is lifting at rated load speed.

6) Balance Load for Electric Elevators Tests - Perform electrical and mechanical balance load tests of car and counterweight.

7) Automatic Shutoff Valve Tests - Test the automatic shutoff valve twice. Once at beginning of acceptance test and again at conclusion of one-hour Endurance test to ensure consistent performance of shutoff valve, regardless of temperature of equipment and oil.

8) Perform miscellaneous tests called for in this Section.

D10 1.2.2 Crane or Monorail with Hoist/Trolley Installation and Certification

Erect and install the crane or monorail system, complete in accordance with the approved submittals and in condition to perform the operational and acceptance tests.

a. Certification

1) Load Chain or Wire Rope - Submit factory certification of rated capacity. Submit certification of minimum wire rope breaking strength for each hoist.

2) Overload Test Certificate - Submit a statement that the crane or monorail with hoist/trolley system can be periodically load tested to 125 percent (plus 5 minus 0) of rated load.

b. Inspection and Testing

After erection, the Contractor and the Contracting Officer shall jointly inspect the crane or monorail with hoist/trolley systems and components to determine compliance with specifications and approved submittals. The Contractor shall notify the Contracting Officer 10 days before the inspection. Provide a report of the inspection indicating the crane or monorail system is considered ready for operational tests.

1) Operational Tests - After erection and inspection, test the crane or monorail with hoist/trolley as specified herein. Test the systems in service to determine that each component of the system operates as specified, is properly installed and adjusted, and is free from defects in material, manufacturer, installation, and workmanship. Rectify all deficiencies disclosed by testing and retest the system or component to prove the system is operational. The Contractor shall furnish loads for testing, operating personnel, instruments, and all other necessary apparatus.

2) Test Data - Record test data on appropriate test record forms suitable for retention for the life of the crane or monorail with hoist/trolley system. Record operating and startup current measurements for electrical equipment (motors and coils) using appropriate instrumentation (i.e., clamp-on ammeters). Compare recorded values with design specifications or manufacturer's recommended values; abnormal differences (i.e., greater than 10 percent from manufacturer's or design values) shall be justified or appropriate adjustments performed. In addition, high temperatures or abnormal operation of any equipment or machinery shall be noted, investigated, and corrected. Record crane or monorail with hoist/trolley speeds during each test cycle.

3) Hook Test - Measure hook for hook throat spread before and after load test. Establish a throat dimension base measurement by installing two tram points and measuring the distance between these tram points (plus or minus 1/64-inch (0.4 mm)). Record this base dimension. Measure the distance between tram points before and after load test. An increase in the throat opening by more than 5 percent from the base measurement shall be cause for rejection.

4) Load Hook Inspection - Magnetic particle inspect the hook and nut over the entire area in accordance with ASTM A 275/A 275M. Acceptance standard shall be no defects. A defect is defined as a linear indication that is greater than 1/8-inch (3.2 mm) long whose length is equal to or greater than three times it width.

5) No-Load Test

a) Hoist: Raise the load hook the full operating lift distance and verify satisfactory operation of hoist, upper limit switch, lower limit switch, and the hoisting and lowering speeds. Operate the hoist at all available speeds in both directions.

b) Hoist/Trolley: Operate hoist/trolley assembly the full length of the monorail or crane bridge in both directions. Operate hoist/trolley at all available speeds in each direction. Verify satisfactory operation and verify trolley speed. Operate all monorail and crane bridge end switches.

c) Crane: Operate crane assembly the full length of the crane runway in both directions. Operate crane at low and high speed in each direction. Verify satisfactory operation and verify crane bridge speeds are provided as specified. Operate all crane bridge end switches.

6) Load Test – Test at 125 Percent (plus 5 percent minus 0) of rated capacity

a) Hoist Static Test: Raise test load approximately 12 inches (300 mm) above the floor and hold for 10 minutes. Observe load lowering that may occur which will indicate malfunction of hoisting component or brake. Lower the test load to the floor until the hoist line is slack.

b) Hoist Dynamic Test: Raise the test load to approximately 5 feet (1.5 meters) above the floor using all available speed points in the process. Lower the load back to the floor using all speed points. Stop the test load at least once while lowering at highest speed and observe proper brake operation. Wait 5 minutes, then repeat the above cycle.

7) Load Brake Test: Raise test load approximately 5 feet (1.5 meters). With the hoist controller in the neutral position, release the holding brake. The load brake should hold the test load. Again with the holding brake in the released position, start the test load down at lowest speed and return the controller to off position as the test load lowers. The load brake should prevent the test load from accelerating. It is not necessary for the load brake to halt the downward motion of the test load.

8) Loss of Power Test: Raise the test load approximately 3 feet (900 mm) and while lowering test load, cut main power to hoist. Load should stop.

9) Hoist/Trolley Test: With test load hoisted to a height of 12 inches (300 mm) above the floor, operate trolley the full distance of the monorail in both directions using both speed points in the process. Observe for any malfunctioning of the trolley assembly or crane or monorail. Operate all crane bridge or monorail end rail switches.

10) Crane: With test load hoisted to a height of 12 inches (300 mm) operate crane assembly the full length of the crane runway in both directions. Operate crane at low and high speed in each direction. Verify satisfactory operation and verify crane bridge speeds are provided as specified. Operate all crane bridge end switches.

11) Rated Load Speed Test - With the hoist/trolley loaded to rated capacity, raise and lower the load verifying that the hoisting and lowering speeds are provided as specified.

With the hoist loaded to rated capacity, operate hoist/trolley along the crane bridge, verifying that the hoist/trolley speed is provided as specified. Further, verify that the hoist/trolley stops in each direction within a distance (in feet) equal to 10 percent of rated capacity high speed (in feet per minute) when initially traveling at high speed and carrying the rated capacity load. Record voltage, amperage, hoisting and lowering speeds, hoist/trolley travel speed, and motor speed for each motor.

With the hoist loaded to rated capacity, operate crane along the crane bridge runway verifying that the crane speed is provided as specified. Further verify that the crane stops in each direction within a distance (in feet) equal to 10 percent of rated capacity high speed (in feet per minute) when initially traveling at high speed and carrying the rated capacity load. Record voltage, amperage, crane travel speed, and motor speed for each motor.

D10 1.3 DESIGN SUBMITTALS

Design Submittals shall be in accordance with Z10, *General Performance Technical Specifications*, UFGS section 01 33 10.05 20, *Design Submittal Procedures,* UFC 1-300-09N, *Design Procedures,* UFC 3-100-10N, *Architecture* and UFC 3-300-10N*, Structural Engineering*.

D10 1.4 CONSTRUCTION SUBMITTALS

Submit construction submittals in accordance with PTS section Z10, *General Performance technical Specifications.* In addition to the Z10 requirements, the Designer of Record (DOR) shall approve the following construction submittals as a minimum:

a. Shop Drawings for Vertical Transportation Equipment (VTE)

1) Elevator Construction Submittals:

In addition to the submittal requirements of ASME A17.1, provide the following submittals:

Detail drawings must include dimensioned layouts in plan and elevation showing the arrangement of elevator equipment, accessories, supporting systems, anchorage of equipment, clearances for maintenance and operation; and details on hoistway, doors and frames, operation and signal stations, controllers, motors, guide rails and brackets, and points of interface with normal power, fire alarm system, HVAC or exhaust systems, and interface with emergency power systems. Drawings shall show any revised building electrical system required to make supplied elevator system function as specified. Drawings shall contain complete wiring diagrams showing electrical connections and other details required to demonstrate sequence of operations and functions of system devices. Drawings shall include the appropriate sizing of electrical protective devices, which are frequently different from National Electrical Code standard sizes.

Submit one set of wiring diagrams in plastic or glass cover, framed and mounted in elevator machine room. Deliver other sets to Contracting Officer. Coded diagrams are not acceptable unless adequately identified.

2) Construction Submittals for OMSI:

Submit final submittals for OMSI Manual. After approval by the DOR and sign-offs by the elevator inspector, assimilate construction submittals into the OMSI manuals required under Section 01 78 24.05 20, *Facility Operation and Maintenance Support Information*.

b. Shop Drawings for Weight Handling Equipment:

Submit to DOR drawings showing the general arrangement of the track beam system, including curves and switches, clearances, principal dimensions, details of structural connections, and all component details. Manufacturer's catalog data will suffice for items of standard manufacturer.

C. Field Tests

D1010 ELEVATORS AND LIFTS

The design and construction of elevators shall comply with the *ITG Elevator Design Guide*.

D1010 1.1 QUALIFICATION OF MANUFACTURER AND INSTALLER

Provide elevator by manufacturer regularly engaged in the manufacture of elevator systems. Manufacturer shall either install elevator system or shall provide letter of endorsement certifying that installer is acceptable to manufacturer. Installer is required to be regularly engaged in installation and maintenance of elevator systems.

Only in the State of Hawaii, use this paragraph: Perform work involving the installation or repair of elevator equipment under the supervision of a person who is licensed in elevator repair in the State of Hawaii or who possesses the equivalent experience. Furnish data to the Contracting Officer for verification that the person exercising direct supervision of the work possesses such experience.

D101001 GENERAL CONSTRUCTION ITEMS

Comply with ASME A17.1 AND ASME A17.2 in their entirety, and additional requirements specified herein. Install in accordance with manufacture’s instructions, ASME A17.1, UFAS AND ADAAG, and NFPA 70. Do not cut or alter Structural Members. Restore damaged or defaced work to original condition. Include recesses, cutouts, slots, holes, patching, grouting, and refinishing to accommodate installation. Use core drilling to drill new holes in concrete. Finish work to be straight, level, and plumb. During installation, protect machinery and equipment from dirt, water, or mechanical damage. At completion, clean all work, and repair any prefinished items that have been damaged during the performance of the work.

Elevators that are intended to carry personnel other than one (1) operator must be classified as a passenger elevator. Passenger elevators that are intended to carry furniture or equipment, must have an oversized cab. Refer to the Project Program for the type of elevator required.

D101001 1.1 TRAFFIC ANALYSIS

Provide a traffic analysis in accordance with criteria established by a nationally recognized elevator manufacturer’s association and conduct interviews with the U ser to determine the following:

a. Passenger or Freight

b. Rated load

c. Rated speed

d. Travel length

e. Number of stops

f. Number of hoistway openings

g. Car platform, car inside, and hoistway door opening dimensions

h. Hoistway Door Types

i. Car Door type

j. For Freight Elevators, identify Class Loading Type - Class A, B, or C, to handle loads as indicated on the project program.

D101001 1.2 ELEVATOR MACHINE ROOM

Provide a machine room for every elevator. Locate the elevator machine and controller in the Elevator Machine Room.

D101002 PASSENGER ELEVATORS

D101002 1.1 HOISTWAY AND CAR EQUIPMENT

D101002 1.1.1 Car and Counterweight Guide Rails and Fastenings

Paint rail shanks with one coat of black enamel. Only T-section type guide rail is acceptable.

D101002 1.1.2 Pit Channel

Provide pit channel for anchorage of main guide rail brackets and also for anchorage of counterweight guide rail brackets and buffer for electric elevators. Each channel shall span distance between guides. On completion of guide rail and buffer installation, both pit channels shall be fully grouted.

D101002 1.1.3 Pit "STOP" Switch

Provide push/pull type pit "STOP".

D101002 1.1.4 Wiring and Traveling Cables

Cables shall be suspended by means of self-tightening webbed devices.

D101002 1.2 CAR AND LANDING DOOR EQUIPMENT

D101002 1.2.1 Infrared Curtain Unit

Provide Infrared Curtain Unit (ICU) with multiple infrared beams that protect to the full height of the door opening. Minimum coverage shall extend from 2 inches (50 mm) off the floor to 70 inches (1778 mm) above floor level.

D101002 1.2.2 Hoistway Entrance Frames

Door frame shall be 14 gage (1.8 mm) thick #4 brushed stainless steel unless directed otherwise by Contracting Officer. Solidly grout uprights of entrance ways to height of 5 feet (1500 mm).

D101002 1.2.3 Car and Hoistway Landing Sills

Car and Hoistway Landing Sill - Provide one piece cast solid white bronze or nickel silver entrance sill. Use same material for hoistway and car entrance sills. Solidly grout under full length of sill.

D101002 1.3 IN-CAR AND LANDING FIXTURES

D101002 1.3.1 Car and Hall Buttons

Provide recessed vandal-resistant push buttons of minimum 3/4-inch (19 mm) size satin-finish stainless steel with illuminating jewel center.

D101002 1.3.2 Position and Direction Indicators

Provide position and direction indicators in car and at each landing.

D101002 1.3.3 Direction Audible Signals

Provide audible signals in car and at each landing.

D101002 1.4 CAR AND CAB EQUIPMENT

D101002 1.4.1 Roller Guides

Provide coil-spring loaded roller guide assemblies in adjustable mountings on each side of car and counterweight frames in accurate alignment at top and bottom of frames.

D101002 1.4.2 Certificate Window

Provide 4 inch (100 mm) high by 6 inch (150 mm) wide certificate window in car operating panel for elevator inspection certificate.

D101002 1.4.3 Cab Ventilation

Provide natural and forced ventilation with two-speed fan.

D101002 1.4.4 Protection Pads and Mounting Hooks

Provide stainless-steel hooks and fire retardant protective pads for one elevator in a set.

D101002 1.4.5 Car Enclosure

Car Shell Return Panels, Entrance Columns, Cove Base, and Transom: Provide 14 gage (1.9 mm) minimum non perforated steel. Apply sound-deadening mastic on all exterior components.

Provide finishes for the elevator cab interior that are appropriate for the type of facility. Finishes shall not exceed the flame spread rates mandated by ASME A17.1.

D101002 1.5 ELEVATOR CONTROLLER

D101002 1.5.1 Non-proprietary Controller

a. On-Board Diagnostic Panel

1) Provide a non-proprietary micro-processor controller for each individual elevator and group controller. Provide an on-board diagnostic control and LCD display panel that allows unrestricted access to the comprehensive range of adjustable parameters necessary to perform installation, adjusting, service, maintenance, and testing of the elevator.

2) Provide LCD displays with the capability to display, monitor, and diagnose any and all fault logs, fault history, trouble calls, and diagnostics. Provide three (3) copies of the complete manufacturer's software program, with complete software documentation, that shall enable the same level of unrestricted access to all controllers of the same make and model, regardless of the installation date or location.

b. External Port - For each individual elevator and group controller, provide a USB port or an RS 232 port that allows connection to an on-site portable laptop computer. Provide the same level of unrestricted access as the on-board diagnostic panel.

c. Repair Requirements - For repair of the microprocessor control system(s), provide maintenance tools, supporting computer software, and software documentation required for complete maintenance of elevator system including diagnostics and adjustments. On-board diagnostic panels shall not require recharging to maintain their memory or authorization for use. Software shall not require periodic reprogramming, or reauthorization. Programs shall be stored in non-volatile memory.

D101002 1.6 OPERATIONAL CONTROLS

D101002 1.6.1 Independent Service

Provide exposed key-operated switch in car operating panel to enable independent service.

D101002 1.6.2 Hoistway Access Switches

Provide key-operated hoistway access switch to permit limited movement of car at terminal floors for car positioning, operative only when "INSPECTION" switch in car operating panel is in the "INSPECTION" position. Locate switch 6 feet (1800 mm) above floor level, within 12 inches (300 mm) of hoistway entrance frame or with only ferrule exposed when located in entrance frame.

D101002 1.6.3 Emergency Commandeering Service

Provide momentary pressure “ON-OFF” key switch and indicator light at all landings. Provide indicator lights that automatically illuminate during emergency service. Key must be removable only when key is in “OFF” position. Provide in accordance with ASME A17.1.

D101002 1.6.4 Keys for Elevator Key Switches

Provide minimum of twelve keys per unique cylinder used on all key switches for single elevator.

D101002 1.7 MAINTENANCE AND DIAGNOSTIC COMPONENTS

D101002 1.7.1 Maintenance and Diagnostic Tools

Provide all special tools and software necessary to service and maintain each elevator; deliver at time of final acceptance. Provide one of each tool for each elevator machine room.

D101002 1.8 ADDITIONAL REQUIREMENTS FOR HYDRAULIC ELEVATORS

D101002 1.8.1 Hydraulic System

Provide hydraulic system which operates at a maximum working pressure of less than 500 psig.

a. Scavenger Pump Unit - Provide a scavenge oil reservoir, with strainer and transfer pump. Provide a manual-reset pit flood switch to prevent pump operation if pit is flooded. Anchor pump and oil reservoir to the pit floor.

b. Pressure Piping and Accessories - Provide ASTM A 53/A 53M or ASTM A 106/A 106M, Schedule 80, black steel piping with ASME B16.9 or ASME B16.11 fittings for supply piping. Provide welded or threaded forged pipe fittings that are located between the pump control valve body and the cylinder inlet. Extend Schedule 80 piping from the pump control valve body, inside the pump unit, to the hydraulic cylinder in the hoistway. Provide dielectric union at each end of the "pump to cylinder" oil supply line. Provide hangers or supports for all piping.

c. Oil Temperature Device - Provide means to maintain oil temperature between 80 and 120 degrees F (27 and 49 degrees C) regardless of ambient temperature.

D101002 1.8.2 Cylinder-Plunger Unit

Provide a plunger of single-piece seamless steel construction. Provide threaded 1/4-inch (6 mm) bleeder valve at top of cylinder just below packing gland. Telescopic or inverted cylinder-plunger units are not acceptable. Provide cylinder with self-stabilizing mount that will support and hold cylinder plumb without the need for stabilization means at the bottom of the cylinder.

D101002 1.8.3 Automatic Shutoff Valve

Provide automatic shut-off valve in oil supply line as close to cylinder inlet as possible. Provide threaded pipe connections to the valve. Provide manual lowering feature on valve. Provide exposed adjustments of automatic shut-off valve with means of adjustment sealed by certified elevator inspector after being set to correct position and tested.

D101002 1.8.4 Well Casing

Line well with steel casing, minimum 1/4-inch (6 mm) wall with welded 1/2-inch (10 mm) steel bottom, set plumb. Install cylinder well casing plumb using spider bob method.

a. PVC Liner - Provide Schedule 80 PVC pipe liner with bottom cap and couplings; joints sealed watertight using PVC pipe manufacturer's recommended adhesive or heat welding methods. Provide liner inside diameter not less than 3-inch (76 mm) larger than elevator cylinder

maximum outside diameter. Set PVC liner into well casing, centered and plumb. PVC liner may be provided as a manufacture's applied liner or as a separate component.

b. Cylinder Installation - Install Cylinder plumb into PVC.

c. Cylinder Evacuation Tube - Provide a 3/4-inch (19 mm) PVC evacuation tube with strainer located within 6 inch (152 mm) of bottom of liner. Provide top of test tube with removable cap to exclude foreign matter.

d. Pressure Test - Test liner-cylinder assembly as a sealed unit. Provide safety relief valve set to relieve at 10 psig (69 kPag); 4.5 inch (114 mm) diameter dial pressure gage scaled for 0 to 50 psig (0 to 175 kPag) and calibrated to 0.5 percent accuracy; and an air pressure admission throttling and shutoff valve. Perform air pressure test in the presence of the Elevator Inspector. For safety, pressure test shall only be performed when liner and cylinder are fully inserted and assembled in the well casing. Perform the test from remote location outside of the elevator pit.

e. Secure cylinder/PVC liner assembly as recommended by cylinder manufacturer.

f. Seal - Seal gap between steel well casing and PVC liner with foam insert strong enough to retain and support final grouting. Provide 3000 psi (21 MPa) grout to a minimum of 4 inch (102 mm) thickness and level top of final grouting with pit floor.

g. Containment - Protect exposed portions of hydraulic elevator oil supply line that are installed below ground, including portions encapsulated in concrete, or covered by construction, with continuous Schedule 80 PVC containment.

D101003 FREIGHT ELEVATORS

D101003 1.1 FREIGHT ELEVATOR REQUIRMENTS

Code compliance and all other general compliance items for freight elevators shall be as for passenger elevators, except for such items deleted, altered or added to by the project program.

D101003 1.2 ADDITIONAL REQUIREMENTS FOR FREIGHT ELEVATORS

a. Guides - In addition to ASME A17.1, for freight elevators with greater than 10,000 pound (4545 Kg) capacity, slide guides are permitted in lieu of roller guides.

b. Horizontal Buck Board Wall Protection – Provide 2-1/2 inch (63 mm) thick (minimum) x 12 inch (304 mm) high (minimum) #2 oak protection boards on all side walls of the elevator at a height to prevent damage from fork lift traffic.

D101004 WHEELCHAIR LIFT

Comply with ASME A18.1, *Safety Standard for Platform Lifts and Stairway Chairlifts*.

D101005 DUMBWAITERS

Comply with ASME A17.1, *Code for Elevators and Escalators*.

D101090 OTHER VERTICAL TRANSPORTATION EQUIPMENT

This section includes elevators not described in the categories above, including people lifts.

D1020 WEIGHT HANDLING EQUIPMENT

D102001 1.1 BASIC REQUIREMENTS FOR CRANES OR MONORAILS WITH HOISTS/TROLLEYS

D102001 1.1.1 Safety

Comply with the mandatory and advisory safety requirements of ASME B30.11 and ASME B30.16.

D102001 1.1.2 Hoist Load Chain or Wire Rope

High strength steel links, flexible; minimum safety factor of 5 to 1 based on ratio of minimum chain or wire rope breaking load to the calculated load on the chain or wire rope when the hoist is assumed loaded to rated capacity. Certification from hoist manufacturer of provided chain's or wire rope’s breaking strength shall be submitted to Contracting Officer and approved prior to final acceptance of hoist. Do not paint or coat the load chain or wire rope.

D102001 1.1.3 Load Block And Hook

Construct load blocks of steel. Provide forged steel, swivel type hook, with hook nut keyed to hook shank by means of a setscrew installed in a plane parallel to the longitudinal axis of the hook shank, or other similar easily removable securing device. Hook throat opening shall be sized for users needs. Provide hook with spring loaded steel safety latch for closing the hook throat opening. The hook and hook nut shall not be unpainted or coated. Permanently mark hook and hook nut with an identification number.

D102001 1.1.4 Bearings

All bearings except those subject to a small rocker motion shall be anti-friction type. Bearings not considered lifetime lubricated by the manufacturer shall be provided with a means for lubrication.

D102001 1.1.5 Painting of System

Provide manufacturer's standard painting or shop painting of components specified in this section; Do not paint, coat, or galvanize load chain, load, hook nut, or load chain sheave.

D102002 OVERHEAD CRANES

D102002 1.1 TOPRUNNING MULTIPLE GIRDER CRANE

Provide an electric powered toprunning multiple girder crane system with electric powered hoist and trolley complete, tested and ready for operation. Crane, hoist, trolley, equipment, materials, installation, examination, inspection, and workmanship shall be in accordance with the applicable requirements of NFPA 70 and CMAA 70, as modified and supplemented by this specification. Reference in these publications to the "authority having jurisdiction" shall be interpreted to mean the "Contracting Officer."

a. Runway Track System - Provide runway track system on the structural supports indicated on the drawings. The track system shall be the sole responsibility of the runway track supplier. However, design shall be subject to the requirements specified herein.

b. Cataloged Products - If possible, provide runway track manufacturer's standard cataloged devices for connection of the track to the indicated supporting structures. If runway track manufacturer's cataloged devices are not provided for this suspension system, complete shop drawings and calculations for any custom connection device shall be submitted for review and approval by the Contracting Officer.

c. Design - The runway system shall be designed and constructed to ensure no impairment of the strength of track or the structural support. A connection device shall be located at each track splice joint. Provide bracing to hold track sections in rigid alignment at all joints.

d. Hoist and Trolley - Provide hoist and trolley in compliance with CMAA 70 requirements as modified and supplemented by this RFP.

e. Crane Basic Requirements - Provide the crane basic components, crane installation, and field testing specified in the requirements below.

f. Electrification – Runway track beam electrification for crane shall be of the flat festooned type or enclosed safety bar type (see project program) with four continuous copper conductors. Provide electrical work in accordance with Section D50, *Electrical*.

g. Power Supply - Power supply emergency shut-off devices for monorail hoist and trolley, shall be readily accessible from the floor, and located within proximity to the crane runway track system.

h. Identification Plates - Provide identification plates of noncorrosive metal. Information and data on the plates shall include, in clearly legible permanent lettering, the manufacturer's name, model number, capacity rating, and other essential information. In addition, the crane system shall be furnished with identification plates showing the capacity of the system, which shall be legible from the floor and from either side of the crane.

D102002 1.2 UNDERRUNNING SINGLE GIRDER CRANE

Provide an electric powered underrunning crane system with electric powered hoist and trolley complete, tested and ready for operation. Crane, hoist, trolley, equipment, materials, installation, examination, inspection, and workmanship shall be in accordance with the applicable requirements of NFPA 70, and MH27.1, as modified and supplemented by this specification. Crane girder and runway tracks shall be patented track. Reference in these publications to the "authority having jurisdiction" shall be interpreted to mean the "Contracting Officer."

a. Patented Track - Provide specially designed trackage, e.g., patented track beam, curves, and switches constructed from welded steel components. The lower flange of the track section shall have flat wheel treads; minimum lower flange width of 3.25 inches (82 mm); chemical composition of 0.45 to 0.60 percent carbon content, 0.60 to 1.1 percent manganese content; and wheel treads shall be hardened to a minimum Brinell Hardness Number of 225. Upper flange and web of the track section shall be steel, continuously welded together or provided as one monolithic piece.

b. Track Suspension - Provide means of suspending the monorail track system, including curves and switches from the structural supports indicated on the drawings. The suspension system shall be the sole responsibility of the track supplier; however, design shall be subject to the requirements specified herein.

c. Cataloged Products - If possible, provide track manufacturer's standard cataloged devices for connection of the track to the indicated supporting structures. If track manufacturer's cataloged devices are not provided for this suspension system, complete shop drawings and calculations for each custom suspension device shall be submitted for review and approval by the DOR.

d. Design - The suspension system shall be designed and constructed to ensure no impairment of the strength of track or the structural support. A hanger or suspension shall be located at each track splice joint. Provide bracing to hold track sections in rigid alignment at all joints.

e. Sway Bracing - Track shall be braced laterally and longitudinally to prevent sway.

f. Lock Nuts - Where the track is suspended from hanger rods, lock nuts or other means shall be provided to prevent the nuts from backing off the rods.

g. Hoist and Trolley - Provide electric, air-powered, or manual hoist and trolley in compliance with requirements specified below by this RFP.

h. Crane Basic Requirements - Provide the crane basic components, crane installation, and field testing specified in the requirements below.

i. Electrification – Runway track beam electrification for crane shall be of the flat festooned type or enclosed safety bar type with four copper conductors. Provide electrical work in accordance with Section D50, *Electrical*.

j. Power Supply - Power supply emergency shut-offs devices for monorail hoist and trolley shall be readily accessible from the floor, and located within proximity to the monorail runway track system.

k. Identification Plates - Provide identification plates of noncorrosive metal. Information and data on the plates shall include, in clearly legible permanent lettering, the manufacturer's name, model number, capacity rating, and other essential information. In addition, the crane system shall be furnished with identification plates showing the capacity of the system, which shall be legible from the floor and from either side of the crane.

D102003 MONORAILS

D102003 1.1 MONORAIL TRACK BEAM SYSTEM

D102003 1.1.1 Drawings and Design Data

a. Drawings: Monorail System - Show the general arrangement of all components, clearances and principal dimensions, assemblies of track, track suspension system, and electrical schematic drawings.

b. Design Data: Load and Sizing Calculations - Submit calculations verifying the sizing of any track, track suspension device and

additional supports, which are not the monorail system manufacturer's standard cataloged product.

Provide a patented track beam to comply with MMA MH27.1 except as modified and supplemented by this specification.

When there is one hoist on one monorail system, the monorail system rated capacity and the hoist rated capacity will be equal. When there is more than one hoist on the monorail system, the rated capacity of the monorail track beam system shall be designed equal to the sum of the two hoists rated capacities. An exception to this is that if the two hoists are separated by positive track beam stops and distance so that the track beam is strength-wise essentially two independent track beam systems.

c. Patented Track – See D102002 1.2.a

d. Track Suspension - See D102002 1.2.b

e. Cataloged Products - See D102002 1.2.c

f. Design - See D102002 1.2.d

g. Suspension of Curves and Switches - Provide steel framing (structural supports), in addition to that indicated, as required by monorail curve and switch manufacturer to support curves and switches. The additional steel framing shall be the sole responsibility of the monorail supplier. Submit shop drawings and framing design calculations to the Contracting Officer for approval.

h. Sway Bracing - See D102002 1.2.e

i. Lock Nuts - See D102002 1.2.f

j. Electrification – See D102002 1.2.i

k. Power Supply - See D102002 1.2.j

l. Identification Plates - See D102002 1.2.k

D102003 1.2 ELECTRIC POWERED HOISTS WITH TROLLEY

D102003 1.2.1 Capacity

The monorail system shall have a minimum rated capacity to be established by the project program. Mark the hoist capacity in pounds on both sides of the hoist or load block.

D102003 1.2.2 Speeds

The hoist shall have one or two operating speeds and shall be capable of hoisting and lowering the rated load at a high speed of as required by the project program. The trolley shall have one or two operating speeds and shall be capable of moving the rated load at a high speed as called for in the project program. Actual speed(s) shall be within plus or minus 15 percent of those specified.

D102003 1.2.3 Electric Wire Rope Hoist

ASME HST-4M, Class H3, except as modified herein as modified and supplemented by this RFP. Hoist shall be double reeved.

Rope lengths shall be sufficient to maintain a minimum of two full wraps of rope at the dead end(s) of the drum, with the block in its lowest indicated position.

D102003 1.2.4 Electric Chain Hoist

ASME HST-1M, Class H3, except as modified herein and supplemented by this RFP. Provide load chain proof test.

Chain hoists of 10 foot (3 meters) lift or more shall be equipped with a load chain bucket

D102003 1.2.5 Motors

NEMA MG 1. Hoist and trolley motors shall be single or two speed AC squirrel cage induction type. Motor insulation shall be Class B minimum. Provide totally enclosed non-ventilated (TENV) motor enclosures. Maximum motor speed shall not exceed 1800 RPM.

D102003 1.2.6 Controls

Provide single or two speed magnetic control for the hoist and trolley. Provide reduced voltage starting, acceleration and deceleration for the trolley drive, if required by the project program. Provide upper and lower limit switches, which de-energize the hoist motor.

D102003 1.2.7 Brakes

Provide hoist with an electro-mechanical holding brake and a mechanical load brake, each capable of holding 130 percent of the rated hoist capacity. Hoist holding brake shall be capable of being released to test the load brake.

Provide trolley with an electro-mechanical brake. Provide trolley brake with a minimum torque rating as required by the project program. Trolley brake torque shall be adjustable down to 85 percent of its torque rating.

D102003 1.2.8 Pendant Pushbutton Station

Hoist and trolley shall be controlled from a pendant pushbutton station. Arrange pushbuttons in accordance with ASME B30.11 recommendations. Locate station 4 feet (1.2 meters) above the finished floor.

D102003 1.2.9 Identification Plates

Provide identification plates of noncorrosive metal with clearly legible permanent lettering giving the manufacturer's name, model number, capacity in pounds, and other essential information or identification.

D102003 1.3 MANUAL HOIST WITH TROLLEY

D102003 1.3.1 Fabrication And Construction

Provide manual hoist and trolley, ASME HST-2M, ASME HST-3M, trolley suspension. Trolley and wheels shall be suitable for operation on the

steel monorail track beam provided, and shall have not less than four wheels.

D102003 1.3.2 Capacity

The hoist shall have a minimum rated capacity of as required by the project program. The monorail system shall have a minimum rated capacity as required by the project program.

D102003 1.3.3 Hook Operating Lift Range

Shall be the manufacturer's standard. The hoist lift highest and lowest points shall be as required by the project program.

D102003 1.3.4 Trolley

Shall be designed to operate from the track beam section provided. Where two or more hoists are located on the same monorail beam, the trolleys shall be equipped with rubber bumper devices designed to prevent contact of any part or parts of the hoists.

D1030 ESCALATORS AND MOVING WALKS

Comply with ASME A17.1 and ASME A17.2.

D103001 ESCALATORS

Comply with ASME A17.1 and ASME A17.2.

D103002 MOVING WALKS

Comply with ASME A17.1 and ASME A17.2.

D1090 OTHER CONVEYING SYSTEMS

D109002 CONVEYORS

Comply with ASME B20.1, *Safety Standards for Conveyors and Related Equipment*.

D109090 OTHER MATERIAL HANDLING SYSTEMS

-- End of Section --

SECTION D30

HVAC
8/08

D30 GENERAL

D30 1.1 NARRATIVE

This section includes the construction of interior mechanical systems. This section covers installations inside the facility and out to the five foot line. See Section G30, *Site Civil/Mechanical Utilities*, for continuation of systems beyond the five-foot line.

D30 1.2 MECHANICAL DESIGN GUIDANCE

Provide the design and installation in accordance with the following references. This Performance Technical Specification (PTS) adds clarification to the fundamental requirements contained in the following Government Standards. The general requirements of this PTS section are located in PTS Section Z10, *General Performance Technical Specification*.

D30 1.2.1 Government Standards

Federal Energy Management Program (FEMP)

UNIFIED FACILITIES CRITERIA (UFC)

UFC 3-400-10N, *Mechanical Engineering*

UFC 3-420-01, *Plumbing Systems*

UNIFIED FACILITIES GUIDE SPECIFICATIONS (UFGS)

UFGS 01 78 24.05 20, *Facility Operation and Maintenance Support Information*

UFGS 23 08 00.00 20, *HVAC Testing/Adjusting/Balancing*

UFGS 23 09 23.13 20, *BACNET Direct Digital Control Systems for HVAC*

UFGS 23 81 23.00 20, *Computer Room Air Conditioning Units*

D30 1.3 PERFORMANCE VERIFICATION AND ACCEPTANCE TESTING

a. Verification of satisfactory HVAC system performance shall be via Performance Verification Testing, as detailed in this section.

b. The Government reserves the right to witness all Acceptance Tests and Inspections, review data, and request other such additional inspections and repeat tests as necessary to ensure that the system and provided services conform to the stated requirements.

c. The Qualified Testing Organization shall provide the Acceptance Tests and Inspections test plan and perform the acceptance tests and

inspections. Test methods, procedures, and test values shall be performed and evaluated in accordance with appropriate standards, and the manufacturer's recommendations. Equipment shall be placed in service only after completion of required tests and evaluation of the test results have been completed. Contractor shall supply to the testing organization complete sets of shop drawings, settings of adjustable devices, and other information necessary for an accurate test and inspection of the system prior to the performance of any final testing. Perform acceptance tests and inspections on Computer Room Air Conditioning Units, Direct Digital Control System, and HVAC Testing/Adjusting/Balancing.

D30 1.4 HVAC COMMISSIONING

Commission the HVAC systems per the Commissioning Plan as required by UFGS Specification Section 01 45 00.05 20, *Design & Construction Quality Control*. HVAC system commissioning shall coordinate with and incorporate the testing, reporting, training & O&M documentation requirements of UFGS 23 08 00.00 20, *HVAC Testing/Adjusting/Balancing* and UFGS 23 09 23.13 20, *BACnet Direct Digital Control Systems for HVAC*.

D30 1.5 DESIGN SUBMITTALS

Design Submittals shall be in accordance with Z10, *General Performance Technical Specifications*, UFGS section 01 33 10.05 20, *Design Submittal Procedures,* UFC 1-300-09N, *Design Procedures,* UFC 3-400-10N, *Mechanical Engineering*.

In addition, UFGS sections listed below or in the body of the PTS text are to be used by the Designer of Record (DOR) as a part of the design submittal. If the UFGS products or systems are applicable to the project, the DOR shall edit these referenced UFGS sections and submit them as a part of the design submittal specification. Edit the specification sections in accordance with the limitations stated in PTS section Z10, *General Performance Technical Specifications*.

UFGS 01 78 24.05 20, *Facility Operation and Maintenance Support Information*

UFGS 23 09 23.13 20, *BACnet Direct Digital Control Systems for HVAC*

UFGS 23 08 00.00 20, *HVAC Testing/Adjusting/Balancing*

D30 1.6 CONSTRUCTION SUBMITTALS

Submit construction submittals in accordance with PTS section Z10, *General Performance technical Specifications.* In addition to the Z10 requirements, the Designer of Record (DOR) shall approve the following construction submittals as a minimum:

OMSI manual for all equipment and fixtures

D30 1.7 MOTORS

Single-phase fractional-horsepower alternating-current motors shall be high efficiency types corresponding to the applications listed in NEMA MG 11. Select polyphase motors based on high efficiency characteristics

relative to the applications as listed in NEMA MG 10. Additionally, all polyphase squirrel-cage medium induction motors with continuous ratings shall meet or exceed energy efficient ratings per Table 12-10 of NEMA MG 1. Provide controllers for 3-phase motors rated 1 hp (0.75 kW) and above with phase voltage monitors designed to protect motors from phase loss and over/under-voltage. Provide means to prevent automatic restart by a time adjustable restart relay. For packaged equipment, the manufacturer shall provide controllers including the required monitors and timed restart. Provide reduced voltage starters for all motors 25 hp and larger.

D3010 ENERGY SUPPLY

D301001 1.1 OIL SUPPLY SYSTEM

Conform to requirements of International Mechanical Code for piping. Conform to requirements of NFPA 31 for testing. Contractor is responsible for providing the complete oil supply system to the facility, including any applications and permits.

D301001 1.2 OIL SUPPLY SYSTEM PIPING & EQUIPMENT

ANSI/ASTM A53 or A106 piping with associated ASME fittings or ASTM B88, type L or M copper tubing with ASME B16.26 flared fittings or compression type fittings. Provide welded fittings on piping below grade. Pumps that are not part of the burner assembly shall be positive displacement type. Provide oil filter prior to oil entering appliance or pump. Storage tanks shall meet the requirements of NFPA 31.

D301002 GAS SUPPLY SYSTEM

D301002 1.1 NATURAL GAS PIPING

Conform to requirements of the local natural gas utility and ASME B31.8, *Gas transmission and Distribution Piping Systems*, for exterior piping. Conform to requirements of NFPA 54, *National Fuel Gas Code*, for interior gas piping. Provide meter and pressure regulator in accordance with the requirements of the local utility. Provide earthquake valve where required by code. Contractor is responsible for providing the complete natural gas system to the facility, including any applications and permits.

D301002 1.2 MATERIALS AND EQUIPMENT

D301002 1.2.1 Aboveground Within Buildings

Black steel per ASTM A 53, Schedule 40, and associated ASME fittings threaded ends for sizes 2 inches (50 mm) and smaller; otherwise, plain end beveled for butt welding.

D301002 1.3 PRESSURE TESTS

Pressure test per NFPA 54 at 1.5 times maximum working pressure, but in no case less than 50 PSI (350 kPa).

D301002 1.4 PROPANE PIPING

If required, provide the same as specified for natural gas and comply with NFPA 58.

D301002 1.4.1 Underground

Polyethylene (PE) pipe conforming to ASTM D 2513 for 100 PSI (690 kPa) (gage) working pressure. Standard Dimension Ratio shall be 11.5 maximum. Provide detectable aluminum plastic backed tape or detectable magnetic plastic tape manufactured specifically for warning and identification of direct buried piping. Tape shall be detectable by an electronic detection instrument. Polyethylene Fittings shall be ASTM D 2683 socket fittings or ASTM D 2513 molded butt-fusion fittings.

D301002 1.5 PROPANE TANKS

If not provided by the propane provider, the tank material and installation shall comply with NFPA 58.

D301003 STEAM SUPPLY SYSTEM (FROM CENTRAL PLANT)

Refer to Section G30, *Site Civil/Mechanical Utilities*

D301004 HOT WATER SUPPLY SYSTEM (FROM CENTRAL PLANT)

Refer to Section G30, *Site Civil/Mechanical Utilities*

D3020 HEAT GENERATING SYSTEMS

D302001 1.1 BOILERS

If required, provide Boiler(s) type for the load capacity of the building as indicated in ESR Section D30.

D302001 1.2 REQUIREMENTS

Boiler shall be designed, tested, and installed per ASME CSD-1 (Controls and Safety Devices) and ASME BPVC (Boiler and Pressure Vessel Code). The boiler shall meet the requirements of the UL 795, ANSI Z83.3, and ASME CSD.

D302001 1.3 BOILER BURNER

Burners provided shall be the make, model and type certified and approved by the manufacturer of the boiler being provided. Burner controls and flame safety equipment shall conform to either ASME CSD-1 or NFPA 58 as dictated by the input.

D302001 1.4 BOILER TRIM AND CONTROL EQUIPMENT

D302001 1.4.1 Boiler Controls

Mount controls, including operating switches, indicating lights, gages, alarms, motor starters, fuses, and circuit elements of the control systems, on a single control panel mounted on the burner or separate from the burner. Location of the separate panel shall be at the side

of the boiler or in a freestanding control cabinet away from the front of the boiler.

D302001 1.4.2 Boiler Trim

Comply with ASME BPVC SEC IV, ASME CSD-1, and additional appurtenances as specified herein.

D302001 1.4.3 Pressure Gages

Provide pressure gages with a scale equivalent to 1.5 times the outlet water pressure on supply water piping and return water piping.

D302001 1.4.4 Thermometers

Provide thermometers with a scale equivalent to 1.5 times the outlet water temperature on supply water piping and return water piping.

D302001 1.4.5 Drain Trapping

Provide drain valve and piping to a floor drain.

D302001 1.4.6 Air Vent Valve

Provide with screwed connection, stainless steel disk, and stainless steel seats to vent entrapped air.

D302001 1.5 STEAM BOILERS

Steam boilers shall meet the requirements of hot water boilers, except as follows.

D302001 1.5.1 Pressure Gages

Provide pressure gages with a scale equivalent to 1.5 times the outlet water pressure on boiler feedwater supply piping and condensate return water piping. Provide boiler steam pressure gage with scale equivalent to 1.5 times the boiler rated working pressure.

D302001 1.5.2 Thermometers

Provide thermometers with a scale equivalent to 1.5 times the outlet water temperature on boiler feedwater piping and return water piping.

D302001 1.6 BOILER STACK AND ACCESSORIES

Provide pre-manufactured, multi-wall stacks complying with NFPA 54 or NFPA 58 and UL-listed. Provide flue gas thermometer and mount in flue gas outlet.

D302001 1.7 BOILER STARTUP AND OPERATIONAL TESTS

D302001 1.7.1 Boiler Cleaning

Prior to startup, clean boiler(s) in accordance with ASME *Boiler and Pressure Vessel Code* and manufacturer's recommendations.

D302001 1.7.2 Operational Tests

Furnish the services of an engineer or technician approved by the boiler manufacturer for installation, startup, operational and safety testing. Demonstrate proper operability of combustion control, flame safeguard control, and safety interlocks.

D302002 FUEL-FIRED UNIT HEATERS

D302002 1.1 GAS-FIRED UNIT HEATERS

ANSI Z83.8 and AGA label. Equip each heater with individually adjustable package discharge louver. Provide with thermostat.

D302002 1.2 INFRARED HEATERS

ANSI Z83.8 and AGA label.

D302003 AUXILIARY EQUIPMENT

D302003 1.1 HEAT EXCHANGERS

Steam to hot water converter as required for the application. Provide factory assembled, u-tube units constructed in accordance with ASME BPVC for steam or hot water. Factory assembled, plate type heat exchangers may be provided for hot water.

D302003 1.2 CONDENSATE RETURN UNITS

Floor-mounted receiver and duplex pump unit.

D302004 EQUIPMENT THERMAL INSULATION

Insulate hot water pumps and equipment as suitable for the temperature and service in rigid block, semi-rigid board, or flexible unicellular insulation to fit as closely as possible to equipment.

D3030 COOLING GENERATING SYSTEMS

If coatings are indicated in ESR Section D30, provide with copper tube/copper fin construction or immersion applied, baked phenolic or other approved coating that passes the 3000 hour salt spray resistance test using the ASTM B117-90 procedure. Field applied coatings are not acceptable.

D303001 CHILLED WATER SYSTEMS

D303001 1.1 AIR-COOLED CHILLERS

Air-cooled chillers shall be type indicated in Project Program and meet the requirements of ARI 550/590-98. Provide control panel with the manufacturers' standard controls and protection circuits. If DDC system is required in project, provide a control interface for remote monitoring

of the chiller's operating parameters, functions and alarms from the DDC control system central workstation.

D303001 1.1.1 Stages

Provide minimum of four stages of unloading at 25% per stage minimum for reciprocating and scroll chillers. Provide reciprocating units with hot gas bypass.

D303001 1.1.2 Pressure Control

Provide head pressure control for cold temperature operation. Provide freeze protection for chiller and piping.

D303001 1.1.3 Coil Construction

Provide copper tube, copper fins with factory applied phenolic or equivalent coating for condenser coils. Provide manufacturer's optional louvered covers or hail guards for condenser coils to provide protection against vandalism, debris, or hail.

D303001 1.2 WATER-COOLED CHILLERS

Self-contained chiller meeting the requirements of ARI 550/590-98. Provide control panel with the manufacturers' standard controls and protection circuits. If DDC system is required in project, provide a control interface for remote monitoring of the chiller's operating parameters, functions and alarms from the DDC control system central workstation. Provide automatic capacity-reduction system for stable operation from 100 to 10 percent of full load capacity.

D303001 1.3 COOLING TOWERS

Factory assembled, conforming to NFPA 214. Fire hazard rating for plastic impregnated materials shall not exceed 25. Provide Cooling Technology Institute 201 certification of tower capability and performance. Cooling Tower performance shall meet or exceed that listed in ASHRAE 90.1. Construct as indicated in ESR Section D30 with fill material of PVC formed sheets. Provide stainless steel hardware. Provide vibration cutout switch interlocked with the fan motor. Provide 2-speed or adjustable frequency drive fan motors. Provide work platform(s) at all locations in the tower that require periodic maintenance. For multi-cell installations, provide isolation valves on inlets and outlets of each cell.

D303001 1.4 CLOSED CIRCUIT COOLERS

Factory assembled, conforming to NFPA 214. Fire hazard rating for plastic impregnated materials shall not exceed 25. Provide Cooling Technology Institute 201 certification of tower capability and performance. Cooler performance shall meet or exceed that listed in ASHRAE 90.1. Provide stainless steel hardware. Provide vibration cutout switch interlocked with the fan motor. Provide 2-speed or adjustable frequency drive fan motors. Meet OSHA safety requirements for stairs and handrails.

D303002 DIRECT EXPANSION SYSTEMS

If coatings are indicated in ESR Section D30, provide with copper tube/copper fin construction or immersion applied, baked phenolic or other approved coating that passes the 3000 hour salt spray resistance test using the ASTM B117-90 procedure. Field applied coatings are not acceptable.

D303002 1.1 HEAT PUMPS

D303002 1.1.1 Air to Air

Air-cooled, split system heat pumps with ducted air distribution. Provide units factory assembled, designed, tested, and rated in accordance with ARI 210/240 or ARI 340/360. Provide manufacturer's minimum recommended clearance around condensing units. Refrigerant piping size shall be per the manufacturer's recommendations. Insulate refrigerant piping suction lines and condensate drain.

D303002 1.1.2 Water Source

Factory assembled, designed, tested, and rated in accordance with ARI 210/240 or ARI 340/360.

D303002 1.1.3 Ground-Coupled

Factory assembled, designed, tested, and rated in accordance with ARI 330. Ground-coupled heat pumps shall be connected to the heat exchanger by a closed loop ground source vertical well field. Design and installation of each well field shall comply with IGSHPA and ASHRAE Standards.

D303002 1.2 CONDENSING UNITS

Air-cooled, split system air conditioner with ducted air distribution. Provide units factory assembled, designed, tested, and rated in accordance with ARI 210/240 or ARI 340/360. Provide manufacturer's minimum recommended clearance around condensing units. Refrigerant piping size shall be per the manufacturer's recommendations. Condenser shall have copper coils with copper fins and with factory applied phenolic or equivalent coating.

D303002 1.3 DX VARIABLE AIR VOLUME (VAV) UNITS

Direct expansion equipment shall be specifically designed and manufactured for VAV applications. The same manufacturer shall provide central air handling units, VAV boxes/zone dampers and zone controls. Airflow through the evaporator coils shall not be modulated. Provide duct mounted zone control damper units with integral control box, designed for use with DX VAV packaged systems. Self-modulating air diffusers will not be allowed.

D303002 1.4 DUCTLESS SPLIT SYSTEM

Air-cooled, ductless split system. Provide units factory assembled, designed, tested, and rated in accordance with ARI 210/240. Provide manufacturer's minimum recommended clearance around heat pump or condensing units. Refrigerant piping size shall be per the manufacturer's

recommendations. Insulate refrigerant piping suction lines and condensate drain.

D3040 DISTRIBUTION SYSTEMS

D304001 AIR DISTRIBUTION, HEATING & COOLING

D304001 1.1 DUCTWORK

Except as specified herein, provide ductwork constructed, braced, reinforced, installed, supported, and sealed per SMACNA standards.

D304001 1.1.1 Flexible Ducts

Use insulated flexible duct only for connections to air distribution devices to adapt to minor offsets. Flexible duct shall be UL 181 listed and per SMACNA DCS with a minimum R value of 4. Maximum length of flexible ductwork shall be 6 feet (2 meters).

D304001 1.1.2 Flexible Connections

Provide flexible connectors between fans and ducts.

D304001 1.1.3 Volume Dampers

Provide manual volume dampers in each branch take-off from the main duct to control air quantity except for primary supply ductwork on VAV systems. Dampers shall conform to SMACNA DCS and shall be seal class “A” construction.

D304001 1.1.4 Fire Dampers

Fire dampers shall be rated per UL 555. Fire dampers shall be dynamic type rated for closure against a moving airstream. Provide fire dampers that do not intrude into the air stream when in the open position.

D304001 1.1.5 Smoke Dampers

Smoke dampers shall be rated per UL 555S.

D304001 1.1.6 Sound Attenuators

Fabricated attenuators that will reduce the rated sound pressure level of the fan down to at least 65 decibels in the 250 Hz (third octave band) center frequency by using a reference sound source calibrated in decibels of sound power at 10 to 12 watts. Maximum permissible pressure drop shall not exceed 0.63 inch of water (157 Pa).

D304001 1.2 LOUVERS & HOODS

D304001 1.2.1 Louvers

Louvers shall bear AMCA ratings seal for air performance and water penetration in accordance with AMCA 500 and AMCA 511. Louvers shall be

constructed of anodized aluminum alloy or stainless steel. Provide birdscreens.

D304001 1.2.2 Hoods

Hoods shall be constructed of anodized aluminum alloy or stainless steel. Provide with birdscreens.

D304001 1.3 GRILLES, REGISTERS, & DIFFUSERS

Factory-finished grilles, registers, and diffusers. Exterior and exposed edges shall be rolled, or otherwise stiffened and rounded.

D304001 1.4 INSULATION

Provide external thermal insulation for all ductwork. Insulate ductwork in concealed spaces with blanket flexible mineral fiber. Insulate ductwork in Mechanical Rooms and exposed locations with rigid mineral fiber insulation.

Provide insulation with factory applied all-purpose jacket with integral vapor retarder. In exposed locations, provide a jacket with white surface suitable for painting. Flame spread/smoke developed rating for all insulation shall not exceed 25/50. Minimum insulation thickness shall be the minimum thickness required by ASHRAE 90.1. Insulate the backs of all supply air diffusers with blanket flexible mineral fiber insulation.

D304001 1.5 VAV BOXES

Pressure-independent type variable air volume units rated per ARI 880. Boxes shall not be allowed to fully shut-off. Provide each box with a heating coil unless not required by space reheat or heating. Provide electronic controls.

D304001 1.6 VARIABLE AIR VOLUME VAV FAN-POWERED UNITS

Pressure-independent, fan powered, VAV units rated per ARI 880 and UL listed. Provide each box with a heating coil. Provide electronic controls with speed controller, discharge volume control damper(s), and return/recirculation air frame and filter. If discharge dampers are not provided with the unit, coordinate installation with the sheet metal contractor. Insulate in accordance with ASHRAE 90.1.

D304002 STEAM DISTRIBUTION SYSTEMS

D304002 1.1 STEAM PIPING

Steam piping shall be ASTM A106 or A53 Grade B, Schedule 40, black steel, electric-resistance welded or seamless.

D304002 1.2 CONDENSATE RETURN PIPING

Condensate return piping shall be ASTM A 106 or ASTM A 53, Grade B, Schedule 80, black steel, electric-resistance welded or seamless.

D304002 1.3 STEEL PIPE FITTINGS

For piping 2 inch (50 mm) and smaller, provide ANSI/ASME B16.3 malleable iron screwed fittings or ASME B16.11 socket welding (Class 3000) or threaded type (Class 2000). Provide ASME/ANSI B16.9 butt-welding fittings or ASME/ANSI B16.5 flanged type for piping 2-1/2 inch (63 mm) and larger.

D304002 1.4 INSULATION

Insulate steam and condensate return piping with mineral fiber or cellular glass insulation with all-purpose jacket.

D304002 1.5 STEAM PRESSURE REDUCING STATION

For each building, provide steam pressure reducing station(s).

D304002 1.6 STEAM TRAPS

Provide steam traps and accessories in accordance with UFC 3-400-10N.

D304003 HOT WATER DISTRIBUTION SYSTEMS

D304003 1.1 HOT WATER PIPING

Hot water piping shall be electric resistance welded or seamless Schedule 40 black steel pipe conforming to ASTM A 53. Piping 4 inch (100 mm) and smaller may be ASTM B 88 Type K or L copper.

D304003 1.2 STEEL PIPE FITTINGS

For piping 2 inch (50 mm) and smaller, provide ANSI/ASME B16.3 malleable iron screwed fittings or ASME B16.11 socket welding (Class 3000) or threaded type (Class 2000). Provide ASME/ANSI B16.9 butt-welding fittings or ASME/ANSI B16.5 flanged type for piping 2-1/2 inch (63 mm) and larger. Grooved joint pipe coupling systems of appropriate pressure rating are acceptable in lieu of welded or screwed fittings.

D304003 1.3 COPPER FITTINGS

ANSI B16.18 cast bronze solder joint type or ASME/ANSI B16.22 wrought copper solder joint type.

D304003 1.4 ISOLATION VALVES

Provide isolation valves on supply and return lines at take-offs for service to each building(s). Valves shall be located in valve boxes.

D304003 1.5 INSULATION

Insulate hot water piping with mineral fiber insulation with factory-applied all-purpose jacket. Provide aluminum metal wrap over insulation for all exterior piping.

D304003 1.6 VALVES

Provide shut off valves, appropriately sized relief valves, and appropriately sized balancing valves as necessary to balance water flows, protect components and isolate equipment for service and repairs.

D304003 1.7 APPURTENANCES

Provide appurtenances such as air separators, expansion tanks, suction diffusers, strainers, and other required features to allow for proper operation of hot water systems.

D304003 1.8 TEST PORTS

Provide test ports in piping at inlet and outlet of all major system components including boilers, pumps, and other equipment as required.

D304004 CHANGEOVER DISTRIBUTION SYSTEMS

Provide as specified for Hot Water Distribution Systems see D304003.

D304005 GLYCOL DISTRIBUTION SYSTEMS

Provide as specified for Chilled Water Distribution Systems see D304006.

D304006 CHILLED / CONDENSER WATER DISTRIBUTION SYSTEMS

D304006 1.1 ABOVEGROUND CHILLED AND CONDENSER WATER PIPING

Aboveground chilled water piping shall be electric resistance welded or seamless Schedule 40 black steel pipe conforming to ASTM A 53. Piping 4 inch (100 mm) and smaller may be ASTM B 88 Type K or L copper.

D304006 1.2 STEEL PIPE FITTINGS

For piping 2 inch (50 mm) and smaller, provide ANSI/ASME B16.3 malleable iron screwed fittings or ASME B16.11 socket welding (Class 3000) or threaded type (Class 2000). Provide ASME/ANSI B16.9 butt-welding fittings or ASME/ANSI B16.5 flanged type for piping 2-1/2 inch (63 mm) and larger.

D304006 1.3 COPPER FITTINGS

ANSI B16.18 cast bronze solder joint type or ASME/ANSI B16.22 wrought copper solder joint type.

D304006 1.4 ISOLATION VALVES

Provide isolation valves on supply and return lines at take-offs for service to each building(s). Valves shall be located in valve boxes.

D304006 1.5 INSULATION

Insulate chilled water pumps and accessories for the temperature and service in rigid block, semi-rigid board, or flexible unicellular insulation to fit as closely as possible to equipment. Insulate above ground chilled water piping with cellular glass insulation (ASTM C 552, Type II, and Type III) or polyisocyanurate insulation (ASTM C 591, type I). Flexible unicellular insulation may be used on small piping runouts. Insulate condenser water piping with mineral fiber insulation. Provide all-purpose jacket with vapor retarder. Provide aluminum metal wrap over insulation for all exterior piping.

D304006 1.6 VALVES

Provide shut off valves, appropriately sized relief valves, and appropriately sized balancing valves as necessary to balance water flows, protect components and isolate equipment for service and repairs.

D304006 1.7 TEST PORTS

Provide test ports in piping at inlet and outlet of all major system components including chillers, pumps, and other equipment as required.

D304007 EXHAUST SYSTEMS

D304007 1.1 FANS

Fans shall be AMCA 210 certified, with AMCA seal. Fan bearings shall have a minimum average life of 200,000 hours at design operating conditions. Provide bird screens for outdoor inlets and outlets. Provide direct-drive type fans with means for verifying operation via the building DDC system or with speed controllers

D304007 1.2 IN-LINE FANS

UL-Listed centrifugal fans.

D304007 1.3 WALL FANS

Propeller fans with fan guards. Provide centrifugal fans with backdraft dampers and wall bracket.

D304007 1.4 ROOFTOP FANS

UL-Listed centrifugal fans with roof curb.

D304007 1.5 UTILITY SETS

AMCA 210 with AMCA seal.

D304007 1.6 BATHROOM FANS

UL 507 and UL-listed, Home Ventilating Institute (HVI) certified and with AMCA seal for ceiling installation.

D304007 1.7 RANGE HOODS

UL 507 and UL-listed, with AMCA seal, range hood with light over stove. Minimum fan capacity shall be 160 cfm with maximum sound level of 5.6 sones.

D304008 AIR HANDLING UNITS

AMCA 210 certified fans with AMCA seal. Fan bearings shall have a minimum average life of 200,000 hours at design operating conditions. Provide bird screens for outdoor inlets and outlets.

D304008 1.1 CENTRAL STATION AIR HANDLERS

Modular construction, double wall air handling units with minimum of 1 inch (25 mm) casing insulation. Provide ARI 430 certified fans and ARI certified coils. Provide stainless steel, positive draining condensate drain pan. For 100% outside air units provide capability for cooling, heating, dehumidification and reheat.

D304008 1.1.1 Ultraviolet Disinfection System

For central station air handling units provide an ultra violet c-band (UVC) disinfection system for mold, bacteria and odor control in each air handler that has a chilled water or DX cooling coil. Irradiation-emitters and fixtures are to be installed in sufficient quantity and in such an arrangement so as to provide an equal distribution of UVC energy on the coil and in the drain pan. To maintain energy efficiency, the UVC energy produced shall be of the lowest possible reflected and shadowed losses. Energy Efficiency - Power supplies shall be of the high efficiency electronic type and matched to the emitter. Intensity - The minimal UVC energy striking the leading edge (if installed upstream) or trailing edge (if installed downstream) of all the coil fins shall not be less than 820 μW/cm2 at the closest point and through placement, not less than 60% of that value at the farthest point. Equal amounts are to strike the drain pan, either directly or indirectly through reflection. The foregoing sets the placement and minimum quantity of fixtures to be installed. Installation - emitters and fixtures shall be installed at right angles to the conforming lines of the coil fins, such that through incident angle reflection, UVC energy bathes all surfaces of the coil and drain pan as well as all of the available line of sight airstream. One complete set of spare bulbs will be supplied.

D304090 OTHER DISTRIBUTION SYSTEMS

D304090 1.1 PUMPS

Centrifugal circulating pumps with motor, motor starter, and motor enclosure conforming to the appropriate NEMA standards. Provide suction diffusers on base-mounted pumps. Insulate pumps used for hot service and chilled water service.

D304090 1.1.1 In-Line Pumps

Pumps constructed of manufacturer’s standard materials suitable for chilled, condenser, and hot water heating systems.

D304090 1.1.2 Base Mounted Pumps

Single stage end suction pumps suitable for chilled, condenser, and hot water heating systems.

D304090 1.2 VARIABLE FREQUENCY DRIVES (VFD)

Factory-assembled variable frequency drive control systems for variable speed control. All air handling unit and pump VFD’s shall be from the same manufacturer. Each VFD shall include motor starter, motor

disconnects and controls as required for a complete system. Units shall be UL-listed and comply with the National Electric Code.

Provide the following accessories:

Disconnect switch

Control circuit transformer, with primary and secondary fuses

Manual bypass

System hand-off-auto switch with provisions for remote start/stop of the system.

System initialized light

Run light

Failure alarm

LCD digital display with numeric keypad

Provide a control interface for remote monitoring of VFD functions and alarms from the DDC control system computer.

D304090 1.3 CHILLED WATER AND HOT WATER AIR SEPARATORS

ASME rated air separators with tangential inlet and outlet connections and automatic air vent.

D304090 1.4 SOLIDS SEPARATORS

Provide centrifugal solids separator with automatic drain in open systems.

D304090 1.5 EXPANSION TANKS

ASME rated expansion tanks with polypropylene or butyl diaphragm or compression tanks as indicated in UFC 3-400-10N.

D304090 1.6 MAKE-UP WATER STATION

Station shall consist of a water pressure-reducing valve, filter and relief valve in the make-up water line to the chilled and hot water systems to maintain the operating pressure. Provide a 3/4 inch (20 mm) globe valve by-pass around this pressure reducing station. Provide reduced pressure backflow preventer upstream of the by-pass.

D304090 1.7 GLYCOL MAKE-UP STATION

If required, provide a glycol makeup system to maintain system proper operating mixture.

D304090 1.8 CONDENSATE DRAIN PIPING

ASTM B 88, Type M or L, hard drawn copper.

D304090 1.9 CONDENSATE DRAIN INSULATION

Insulate condensate drain piping with flexible cellular insulation.

D304090 1.10 CHEMICAL TREATMENT

If required, Provide chilled and hot water systems with automatic chemical treatment system for the control of pH, scale formation, and corrosion inhibition. Provide shot-type feeders for manual chemical feed. Feeders shall be rated for use with pressures up to 130 PSI (900 kPa) (gage). Provide condenser water systems with automatic chemical treatment systems that monitor conductivity, and pH, and provide for water metering and bleed-off. Provide chemicals in accordance with EPA and equipment manufacturer’s recommendations.

D304090 1.11 PIPING IDENTIFICATION

Provide piping identification labels or Stencil names or code letters for piping systems in clearly visible letters and symbols. Provide arrow-shaped markings to indicate direction of flow.

D304090 1.12 PIPE SLEEVES

Provide pipe sleeves at each wall and floor penetration. The sleeve shall be of a material suitable to protect the carrier pipe (two pipe sizes larger) and sealed with an appropriate flexible material. Provide fire stopping in fire rated walls in accordance with IBC.

D304090 1.13 SYSTEM FLUSHING

Thoroughly flush hydronic systems prior to system startup. Isolate coils during initial flushing until water is clear.

D304090 1.14 HEAT TAPE

UL-Listed, self-regulating, heat tape on piping subject to freezing.

D3050 TERMINAL & PACKAGE UNITS

D305001 UNIT HEATERS

See D302004 for gas fired unit heaters.

D305001 1.1 STEAM

UL-Listed, factory assembled, unit heaters.

D305001 1.2 HOT WATER

UL-Listed, factory assembled, unit heaters.

D305001 1.3 CABINET UNIT HEATER

UL-Listed, factory assembled, heaters.

D305002 FAN COIL UNITS

UL-Listed, factory assembled and tested fan coils, ARI 440 and ARI certified.

D305003 FIN TUBE RADIATION

D305003 1.1 FIN TUBE RADIATORS AND CONVECTORS

Fin tube radiators and Convectors shall be provided with copper tubes and aluminum fins. Provide normally open, spring return control valves.

D305004 ELECTRIC HEATING

D305004 1.1 UNIT HEATERS

Factory assembled, UL-1025, unit heaters.

D305004 1.2 BASEBOARD HEATERS

Factory assembled, UL-1042, heaters.

D305004 1.3 WALL HEATERS

Factory assembled, UL-1025, cabinet heaters.

D305004 1.4 INFRARED HEATERS

Factory assembled, UL-Listed and labeled heaters.

D305005 PACKAGE UNITS

D305005 1.1 ROOFTOP AIR HANDLERS

Factory packaged units in accordance with ARI 430 and suitable for outdoor installation. Provide with manufacturer’s roof curb.

D305005 1.2 DUCT HEATER

Factory assembled, UL-listed heaters. Provide control cabinet and heating coil.

D3060 CONTROLS AND INSTRUMENTATION

D306001 HVAC CONTROLS

D306001 1.1 DIRECT DIGITAL CONTROLS

Provide one of the following as directed in ESR Section D30.

a. Provide Direct Digital Controls (DDC) to comply with UFGS Section 23 09 23.13 20, *BACNET Direct Digital Control Systems for HVAC*. The Designer of Record shall utilize UFGS Specification Section 23 09 23.13 20, *BACNET Direct Digital Control Systems for HVAC*, for the project

specification, and shall submit the edited specification section as a part of the design submittal for the project.

b. Provide a partial direct digital control (DDC) system that will communicate with the existing DDC system. Notwithstanding any other provisions of this contract, no other product will be acceptable other than that indicated in ESR Section D30. Provide a distributed control system. The system shall have stand alone digital controllers, a communication network, and a workstation computer with control software. Pneumatic controllers and components are not acceptable. All 120-volt wiring shall comply with NFPA 70. All 24-volt wiring shall comply with the IMC and terminal device manufacturer's recommendations.

D306001 1.2 INSTRUMENT PANELS

D306001 1.2.1 Equipment Controllers

DDC hardware shall be UL-916 rated. Use controllers in a distributed control manner. Controllers shall be stand alone with an internal clock and modem. The total number of I/O hardware points shall not exceed 48 in any controller. Provide sufficient memory for each controller to support required control, communication, trends, alarms, and messages. Provide communications ports for controller to controller, on-site interface, remote workstation interface, and telecommunications interface.

D306002 ELECTRONIC CONTROLS

If required, provide programmable thermostats with built in keypads for scheduling of day and night temperatures with two setback periods per day. Provide independent summer and winter programs. Thermostats shall have temporary and manual override of schedule and battery backup.

D3070 SYSTEMS TESTING AND BALANCING

D3070 1.1 HVAC SYSTEM

The Designer of Record shall utilize UFGS Specification Section 23 08 00.00 20, *HVAC Testing/Adjusting/Balancing*, for the project specification, and shall submit the edited specification section as a part of the design submittal for the project.

D307001 WATER SIDE TESTING & BALANCING – HEATING & COOLING

Refer to paragraph D3070.

D307002 AIR SIDE TESTING & BALANCING – HEATING, COOLING & EXHAUST

Refer to paragraph D3070.

D3090 OTHER HVAC SYSTEMS AND EQUIPMENT

D309001 GENERAL CONSTRUCTION ITEMS

D309001 1.1 SEISMIC DESIGN

Provide in accordance with UFC 3-400-10N, *Mechanical Engineering*.

D309002 REFRIGERATION SYSTEMS

D309090 OTHER SPECIAL MECHANICAL SYSTEMS

D309090 1.1 ENERGY RECOVERY WHEELS

Total energy (enthalpy) type energy recovery wheels (heat wheels). Media shall be aluminum or a lightweight polymer coated with a corrosion-resistant finish. Etched or oxidized surfaces are not acceptable. Heat transfer surfaces shall be coated with a non-migrating (permanently bonded) absorbent specifically developed for the selective transfer of water vapor. Equal sensible and latent recovery efficiencies shall be documented through a certification program conducted per ASHRAE 84 and ARI 1060. The energy recovery wheel shall have an insulated housing of double wall construction, rotor seals that are specifically designed to limit cross-contamination, and a rotation detector. Should rotation stop, the rotation detector shall alarm the HVAC control system. Filter sections shall be readily accessible for maintenance.

D309090 1.2 HEAT PIPES

Factory fabricated, assembled and tested heat pipes with counter-flow arrangement. Provide hermitically sealed, seamless aluminum tube cores with extended surfaces. Heat exchanger frame shall be constructed of not less than 16-gage galvanized steel and fitted with intermediate tube supports, and flange connections. Provide tube end covers and a partition of galvanized steel to separate exhaust and supply air streams without cross-contamination. A refrigerant shall be used as the working fluid. Type I refrigerants are not allowed.

-- End of Section --

SECTION D40

FIRE PROTECTION
4/08

D40 GENERAL

D40 1.1 DESIGN GUIDANCE

Provide the design and installation of fire protection systems in accordance with the following references. This Performance Technical Specification (PTS) adds clarification to the fundamental requirements contained in the following Government Standards. The general requirements of this PTS section are located in PTS Section Z10, *General Performance Technical Specification*.

D40 1.2 QUALITY ASSURANCE

Materials and assemblies installed in the work shall be inspected and found to be in compliance with industry standards and these specifications prior to acceptance of the work. Items found not to be in compliance shall be removed, or corrective measures taken, to assure compliance with the referenced standard.

Qualifications, Training Plans, and Test Plans and Procedures indicated herein, shall be submitted 45 calendar days prior to the expected date of execution. Notify the Contracting Officer 14 calendar days prior to all testing. Submit test results within 7 calendar days of completion of testing.

D40 1.2.1 Qualified Workers

Use qualified workers who are certified as a minimum Level III Technician by National Institute for Certification in Engineering Technologies (NICET), thoroughly trained and experienced, and completely familiar with the specified requirements and the methods needed for proper performance of the work in this section. Installers of systems in D4090 shall be certified at a minimum Level IV NICET. Installers of Chlorinated Poly Vinyl Chloride (CPVC) sprinkler systems shall be certified by the manufacturer and maintain a copy of their certification on hand at all times.

D40 1.2.2 Fire Protection Designer of Record

The FPDOR shall review and approve all fire protection engineering submittals.

D40 1.2.3 Fire Protection QC Specialist

The Fire Protection (FP) QC Specialist shall be a U.S. Registered Fire Protection Engineer (FPE) and shall be an integral part of the Prime Contractor's Quality Control Organization. This FPE shall have no business relationships (owner, partner, operating officer, distributor, salesman, or technical representative) with any fire protection equipment device manufacturers, suppliers or installers for any such

equipment provided as part of this project. The Fire Protection Designer of Record (FPDOR) may serve as the FPQC Specialist provided the following qualifications are met.

a. Qualifications/Experience: The FPQC Specialist shall have obtained their professional registration by successfully completing the Fire Protection Engineering discipline examination. This FPE shall have a minimum of 5 years full time and exclusive experience in every aspect of facility design and construction as it relates to fire protection, which includes, but is not limited to, building code analysis, life safety code analysis, design of automatic detection and suppression systems, passive fire protection design, water supply analysis, and a multi-discipline coordination reviews, and construction surveillance.

b. Area of Responsibility: The FPQC Specialist is responsible for assuring the proper construction and installation of life safety and fire protection features across all disciplines and trades. The FPQC Specialist shall be responsible for assuring that life safety and fire protection features are provided in accordance with the design documents, approved construction submittals, and manufacturer's requirements. Examples include, but are not limited to, water distribution systems including fire pumps and fire hydrants, fire resistive assemblies such as spray-applied fire proofing of structural components and fire rated walls/partitions, fire alarm and detection systems, fire suppression and standpipe systems, and emergency and exit lighting fixtures.

c. Construction Surveillance: The FPQC Specialist shall visit the construction site as necessary to ensure life safety and fire protection systems are being constructed, applied, and installed in accordance with the approved design documents, approved construction submittals, and manufacturer's requirements. Frequency and duration of the field visits are dependent upon particular system components, system complexity, and phase of construction. At a minimum, field visits shall occur just prior to installation of suspended ceiling system to inspect the integrity of passive fire protection features and fire suppression system piping, preliminary inspections of fire alarm/detection and suppression systems, and final acceptance testing of fire alarm/detection and suppression systems. The FPQC Specialist shall prepare a written report detailing compliance of any outstanding submittal review comments, summarizing the results of all tests, detailing all discrepancies discovered, corrective action taken, all forms as required by the respective NFPA codes, and recommendations/certifications for acceptance. Forward one copy of the report with attachments to the Naval Facilities Engineering Command Fire Protection Engineer.

D40 1.2.4 Performance Verification Testing

All systems shall have operational tests to demonstrate compliance with contract requirements and respective NFPA codes, International Building Code and as noted below. Test procedures shall be in full compliance with the respective NFPA codes, the equipment manufacturer recommendations, and UFC 3-600-10N. Provide all personnel, equipment, and materials for tests. Return trips to witness repeat acceptance

tests due to failure of previous tests will be at the Contractor’s expense.

D40 1.2.4.1 Preliminary Inspections and Final Acceptance Testing

The FPQC Specialist shall personally witness all preliminary inspections of fire alarm/detection and suppression systems. Once preliminary inspections have been successfully completed, the FPQC Specialist shall submit a signed certificate to the QC Manager that systems are ready for final inspection and testing. The Naval Facilities Engineering Command Fire Protection Engineer will witness formal tests and approve all systems before they are accepted. The QC Manager shall submit the request for formal inspection at least 15 days prior to the date the inspection is to take place. The QC manager shall provide 10 days advance notice to the Contracting Officer and the activity Fire Inspection Office of scheduled final inspections.

D40 1.2.4.2 Final Life Safety/Fire Protection Certification

The FPQC Specialist shall provide certification that all life safety and fire protection systems have been installed in accordance with the contract documents, approved submittals, and manufacturer's requirements. This certification shall summarize all life safety and fire protection features, and shall bear the professional seal of the FPQC Specialist.

D40 1.2.4.3 System Manufacturers Representatives

The systems manufacturer technical representative shall be present for the final inspection and test for the following systems: fire alarm and detection, fire pump, carbon dioxide, foam generating and clean agent extinguishing.

D40 1.2.4.4 Fire Suppression Water Supply and Equipment

The fire hydrants shall be inspected prior to backfilling the trench surrounding the fire hydrants. A report, including pictures, shall be provided to the Contracting Officer.

Fire pump tests shall be conducted in the presence of the pump, controller, and engine manufacturer technical representatives. The fire pump manufacturer shall also be present for the preliminary test of the fire pump system.

D40 1.2.4.5 Kitchen Hood Fire Extinguishing Systems

The kitchen hood fire extinguishing system shall contain water for the actual performance testing. The nozzles may be bagged in order to minimize damage from water spray.

D40 1.2.4.6 Spray-Applied Fire Proofing and Fire Stopping

See Section C1030 for requirements.

D40 1.2.5 Training

The contractor shall provide training for the active systems within 6 weeks of final acceptance of the systems. The training shall be scheduled at least 2 weeks in advance.

D40 1.3 DESIGN SUBMITTALS

Design Submittals shall be in accordance with Z10, *General Performance Technical Specifications*, UFGS section 01 33 10.05 20, *Design Submittal Procedures,* UFC 1-300-09N, *Design Procedures* and UFC 3-600-10N, *Fire Protection Engineering*.

D40 1.4 CONSTRUCTION SUBMITTALS

Submit construction submittals in accordance with PTS Section Z10, *General Performance Technical Specifications*. In addition to the Z10 requirements, the Designer of Record (DOR) shall approve the following construction submittals as a minimum:

All fire protection engineering submittals including:

a. Shop Drawings. Provide shop drawings for all systems.

b. Product Data. Provide product data for all equipment.

c. Design Data. Provide design data for all system calculations.

d. Test Reports

e. Certificates

D4010 FIRE ALARM AND DETECTION SYSTEMS

D401001 FIRE ALARM DISTRIBUTION

D401001 1.1 REMOTE ANNUNCIATORS

Remote annunciators shall have a minimum 80 character alphanumeric display with alarm acknowledge, alarm silence, and reset functions.

D401001 1.2 TRANSMITTED SIGNALS

Provide the following signals to be sent to the fire alarm receiving station:

a. Sprinkler Water Flow

b. Smoke Detector

c. Manual Pull Station

d. Supervisory (i.e., valve tamper switch, fire pump loss of power, fire pump phase reversal)

e. Duct Smoke Detector

f. Fire Pump Running

g. Sleeping Room Smoke Detector

D4020 FIRE SUPPRESSION WATER SUPPLY AND EQUIPMENT

D402001 FIRE PROTECTION WATER PIPING AND EQUIPMENT

The design point of connection to the existing water supply shall require the approval of the Contracting Officer. The FP DOR shall conduct additional flow tests after contract award prior to any design submissions. Tests shall be conducted under the supervision of the Contracting Officer.

D4030 SPRINKLERS

D403001 SPRINKLERS & RELEASING DEVICES

D403001 1.1 DESCRIPTION

Areas subject to freezing shall be provided with a dry pipe system. Loading docks may be protected with dry-type sidewall sprinklers supplied by the wet-pipe system.

D403001 1.2 REQUIREMENTS

Utilize upright sprinklers with ordinary temperature rating and color to match finish in normally occupied rooms without a finished ceiling (i.e., laboratories, and other spaces with exposed ceilings).

D4090 OTHER FIRE PROTECTION SYSTEMS

D409001 CARBON DIOXIDE SYSTEMS

Supply shall include storage cylinders, racks, manifolds, beam scales, and associated equipment. Arrange the primary cylinders for automatic discharge upon activation of the main control, and the secondary cylinders for discharge both manually and upon no discharge from the primary cylinders.

D409002 FOAM GENERATING EQUIPMENT

D409002 1.1 SYSTEM CRITERIA

Foam fire protection systems shall incorporate the necessary elements for foam storage, pumping, piping, proportioning, delivery, and detection, activation and alarm systems.

D409002 1.2 SYSTEM OPERATION

Once activated, foam system(s) shall operate until shut down manually. Provide separate circuits from the releasing control panel to each zone of initiating devices. Transmission of signals from more than one zone over a common circuit is prohibited.

D409002 1.3 AFFF CONCENTRATE PUMPS

The foam concentrate pump shall be positive displacement, electric motor driven, drip proof, 240/480 volts, 60 Hz AC. System operation shall be fully automatic, with manual over-ride and manual shutdown.

D409002 1.4 FOAM CONCENTRATE STORAGE TANK

A gage or unbreakable sight glass shall permit visual determination of level of tank contents, unless liquid level is clearly visible through shell of tank.

D409002 1.5 LOW-LEVEL LOW-EXPANSION FOAM SYSTEM

D409002 1.5.1 Discharge Devices

Where used the low-level AFFF nozzle system shall utilize the Viking Grate Nozzle TM, Model GN 200 (or equivalent that is acceptable to the NAVFAC Chief Fire Protection Engineer for this use).

D409002 1.5.2 Test Header

Where used a foam system test header connection with integral gate valves shall be located at each foam system riser. Sufficient 2-1/2 inch (65 mm) male National Standard hose threads, with cap and chain, shall be installed to allow testing of the riser at the design flow rate. A wall escutcheon plate with “FOAM TEST HEADER” in raised letters cast in plate shall be installed.

D409002 1.6 AUTOMATIC WATER CONTROL VALVE ASSEMBLY (DELUGE VALVE)

Where used, the water control valve shall be an electrically actuated type. Valve shall be resettable without opening the valve. Solenoid valve shall be of the normally closed, de-energized type, which opens when energized upon receipt of an electrical signal from the releasing control panel to which it is connected. Solenoid valves used with diaphragm-type valves shall be rated for a maximum pressure differential of 175 psi (1207 kPa). Water control valves used for low-level foam systems shall be capable of recycling to the closed position at an adjustable speed. Valves located in hazardous locations shall be approved for the hazard classification of the area where located.

D409002 1.7 FOAM SYSTEM RELEASING CONTROL SYSTEM

D409002 1.7.1 Manual Releasing Stations

Where used the units shall be dual-action type located inside a clear plastic tamper cover that must be lifted prior to actuating the station. Any lettering on the cover must be “FOAM”; the words “fire” or “fire alarm” shall not appear on the cover. The station shall not require the breaking of glass to actuate. Unit shall have operating instructions clearly marked on the station cover. Unit shall be compatible with the control panel to which it is connected. Operation of a station shall result in immediate release of the foam system for that space.

D409002 1.7.2 Flame Detectors

Where used flame detectors shall operate on the infrared (IR) principle. Detector shall employ three IR sensors to provide multi-spectrum detection. Each detector shall have a manufacturer's swivel mounting bracket. Locate a permanent engraved rigid plastic or metal label at each detector with detector aiming information (degrees horizontal and vertical) for the corresponding detector.

D409002 1.7.3 Abort Switch

Where used a foam release abort switch shall be installed adjacent to each manual releasing station and at the releasing panel and be properly labeled (Minimum 1½ inch high lettering stating: CONTINUOUS OPERATION OF SWITCH WILL ABORT FOAM FLOW UNTIL SYSTEM IS RESET". Switch shall be deadman type which when depressed ceases flow of foam solution (both water and foam concentrate). Upon release of the switch, the system shall return to its previous operational state. Switch and wiring shall be supervised.

D409003 CLEAN AGENT SYSTEMS

D409003 1.1 SYSTEM INSTALLATION

The system shall be supplied and installed by a factory-authorized distributor. The distributor shall be trained by the manufacturer to design, install, test, and maintain the system and shall be able to provide proof of training upon request.

D409003 1.2 RELEASING CONTROL SYSTEM

Where provided manual release stations shall be dual-action type located inside a clear plastic tamper cover that must be lifted prior to actuating the station. The words "fire" or "fire alarm" shall not appear on the cover. The station shall not require the breaking of glass to actuate. Unit shall have operating instructions clearly marked on the station cover. Unit shall be compatible with the control panel to which it is connected. Operation of a station shall result in immediate release of the clean agent system for that space.

D409004 HOOD & DUCT FIRE PROTECTION

Exhaust hoods with grease extractors listed by UL or FM are not required to have protection downstream of the grease extractor.

--End Of Section--

SECTION D50

ELECTRICAL
8/08

D50 GENERAL

D50 1.1 NARRATIVE

This section covers installations inside the facility and out to the five foot line. See PTS Section G40, *Site Electrical*, for continuation of systems beyond the five foot line.

D50 1.2 ELECTRICAL DESIGN GUIDANCE

Provide the design and installation in accordance with the following references. This Performance Technical Specification (PTS) adds clarification to the fundamental requirements contained in the following Government Standards. The general requirements of this PTS section are located in PTS Section Z10, *General Performance Technical Specification*.

When all product Quality Control information is included in the Unified Facility Criteria (UFC) and there are requirement options identified in the ESR, then the Uniformat Level 4 titles (and possible subtitles) are included without additional verbiage. One example of this is D501090, OTHER SERVICE AND DISTRIBUTION.

D50 1.2.1 Government Publications

UNITED FACILITIES CRITERIA (UFC)

UFC 3-500-10N, *Electrical Engineering*

UFC 3-580-10, *Navy and Marine Corps Intranet (NMCI) Standard Construction Practices*

UNITED FACILITES GUIDE SPECIFICATIONS (UFGS)

UFGS 26 23 00, *Switchboards and Switchgear*

UFGS 26 29 23, *Variable Frequency Drive Systems Under 600 Volts*

UFGS 26 32 13.00 20, *Single Operation Generator Sets*

UFGS 26 32 26, *Motor Generator Sets, 400 Hertz*

UFGS 26 33 53.00 20, *Uninterruptible Power Supply (UPS)*

UFGS 26 35 43, *400 Hertz Solid State Frequency Converters*

UFGS 26 36 23.00 20, *Automatic Transfer Switches*

UFGS 28 20 00.00 20, *Electronic Security System (ESS), Commercial*

D50 1.3 QUALITY ASSURANCE

Qualifications, certifications, and Test Plans indicated herein shall be submitted 45 calendar days prior to the expected date of execution. Notify the Contracting Officer 14 calendar days prior to all testing. Submit test results within 7 calendar days of completion of testing.

The Designer of Record is responsible for approving the submittals listed below.

D50 1.3.1 Qualified Testing Organization

Contractor shall engage the services of a qualified testing organization to provide inspection, testing, calibration, and adjustment of the electrical distribution system and equipment listed in paragraph entitled "Acceptance Tests and Inspections" herein. Organization shall be independent of the supplier, manufacturer, and installer of the equipment. The organization shall be a first tier subcontractor.

Submit name and qualifications of organization. Organization shall have been regularly engaged in the testing of electrical materials, devices, installations, and systems for a minimum of 5 years. The organization shall have a calibration program, and test instruments used shall be calibrated in accordance with NETA ATS.

Submit name and qualifications of the lead engineering technician performing the required testing services. Include a list of three comparable jobs performed by the technician with specific names and telephone numbers for reference. Testing, inspection, calibration, and adjustments shall be performed by an engineering technician, certified by NETA or the National Institute for Certification in Engineering Technologies (NICET) with a minimum of 5 years' experience inspecting, testing, and calibrating electrical distribution and generation equipment, systems, and devices.

D50 1.3.2 NEC Qualified Worker

Provide in accordance with NFPA 70. Qualified Workers shall be allowed to be assisted by helpers on a 1 to 1 ratio, provided such helpers are registered in recognized apprenticeship programs. Submit a certification confirming NEC Qualified Worker requirements.

D50 1.3.3 Qualified Telecommunications Worker

All installers assigned to the installation of telecommunications systems or any of its components shall be Building Industry Consulting Services International (BICSI) Registered Cabling Installation Technicians or have a minimum of 3 years experience in the installation of the specified copper and fiber optic cable and components. Include names and locations of two projects successfully completed using optical fiber and copper communications cabling systems. Include written certification from users that systems have performed satisfactorily for not less than 18 months. Include specific experience in installing and testing structured telecommunications distribution systems using optical fiber and Category 5e cabling systems.

D50 1.3.4 Material Standards

Ensure service support and provide manufacturer's nameplate in accordance with PTS Section Z10, *General Performance Technical Specification*.

D50 1.3.4.1 Warning Labels

Provide arc flash warning labels.

D50 1.3.4.2 Field-Required Nameplates

Provide laminated plastic nameplates for each switchboard, switchgear, panelboard, equipment enclosure, motor controller, relay, and switch. Each nameplate must identify the function and, when applicable, the position. Provide melamine plastic nameplates, 0.125 inch (3 mm) thick, white with black center core. Surface shall be matte finish. Corners shall be square. Accurately align lettering and engrave into the core. Minimum size of nameplates shall be 1-inch by 2-1/2 inches (25 mm by 65 mm). Lettering shall be a minimum of 0.25 inch (6.35 mm) high normal block style.

D50 1.3.5 Factory Testing

The Government reserves the right to witness all factory testing. The manufacturer shall have a calibration program that assures that all applicable test instruments are maintained within rated accuracy.

D50 1.3.6 Electrical System Startup and Testing

Submit test plans for approval. The test plans shall be tailored to the systems provided.

The test plan shall list make and model and provide functional description of the test instruments and accessories and shall describe the setup of the tests to be conducted. Test instruments shall be capable of measuring and recording or displaying test data at a higher resolution and greater accuracy than specified for the equipment's performance.

D50 1.3.6.1 Factory Trained Engineer

Provide a factory trained engineer to supervise start-up and testing as required in referenced specifications.

D50 1.3.6.2 Performance Verification Testing

The Contractor shall show by demonstration in service that all circuits and devices are in operating condition. Tests shall be such that each item of control equipment will function not less than five times. The Contractor shall provide all necessary test equipment, tools, fuel, load banks, labor, and materials for testing. As a minimum, all systems shall be tested in accordance with manufacturer's recommendations. Additional testing requirements for the various systems are described with those systems, hereinafter. The Contractor shall assure that all applicable test instruments are maintained within rated accuracy. Dated calibration labels shall be visible on all test equipment.

Submit a separate electrical field test plan in accordance with manufacturer’s recommendations and that conforms to NETA ATS for each piece of Electrical Distribution Equipment and System requiring Performance Verification Testing.

The following items identify specific test requirements. Additional test requirements are contained in the applicable UFGS.

a. Panelboards - Field test each GFI and AFI circuit breaker with a UL 1436-certified outlet circuit tester to verify correct operation.

b. Motor control centers – Test motor control centers and motor starters in accordance with NETA ATS.

c. Transient voltage surge suppressors (TVSS) –

1) Inspect for physical damage and compare nameplate data with the drawings and specifications, if applicable. Verify from the nameplate data that the TVSS equipment is appropriate for the system voltage.

2) Verify lead length between the TVSS equipment and the circuit connection is less than one foot.

3) Verify wiring between the TVSS equipment and the circuit connection does not include high-inductance coils or sharp bends.

4) Confirm circuit breaker used for TVSS circuit connection is sized in accordance with TVSS manufacturer’s requirements.

5) Ensure TVSS equipment is grounded in accordance with TVSS manufacturer’s requirements. Check the ground lead on each device for individual attachment to the ground bus or electrode.

6) Check tightness of connections in accordance with NETA ATS.

7) For TVSS equipment with visual indications of proper operation, verify that it displays normal operating characteristics.

d. Busway – Conduct standard tests for busway in accordance with NETA ATS.

e. Receptacles – Test GFI receptacles with a UL 1436-certified outlet circuit tester to verify correct operation.

f. Lighting - Aim photocell switches and locate light level sensors in accordance with the manufacturer's recommendations. Verify that equipment operates in accordance with user’s requirements and in accordance with manufacturer’s recommendations. Fluorescent lamps on electronic dimming ballast control shall be burned in at full light output for 100 hours before dimming.

g. Telecommunication - Test telecommunications systems in accordance with applicable EIA/TIA requirements.

h. Public address and intercommunications systems - Tests shall include originating and accepting messages at each station, at proper volume levels, without cross-talk or noise from other links or non-designated units. Test shall utilize the phonetically balanced monosyllabic work intelligibility test in accordance with ANSI S3.2 (ASA 85). In order to be acceptable, a score of at least 75 percent must be obtained for each system test.

j. Community Antenna Television Systems - Confirm design and installation is in compliance with NCTA-02, 47 CFR 76.605 and in accordance with FCC proof of performance requirements. Test plan shall define tests required to ensure that the system meets technical, operational, and performance specifications. Test plan shall include plan for testing for signal leakage.

k. Electronic security systems (ESS) – Test ESS in accordance with UFGS requirements.

l. Grounding systems - Test the grounding system in accordance with NETA ATS.

m. Lightning protection - Upon completion of the installation, Contractor shall furnish the UL Lightning Protection Inspection Certificate certified to UL 96A for the system.

n. Emergency lighting - Test emergency lighting that is intended for means of egress in accordance with NFPA 101, Section 5-9. Confirm the emergency lighting system operates for a minimum of 90 minutes and emergency illumination satisfies NFPA 101, Section 5-9, specified levels.

D50 1.3.6.3 Acceptance Tests and Inspections

The Government reserves the right to witness all Acceptance Tests and Inspections, review data, and request other such additional inspections and repeat tests as necessary to ensure that the system and provided services conform to the stated requirements.

The Qualified Testing Organization shall provide the Acceptance Tests and Inspections test plan and perform the acceptance tests and inspections. Test methods, procedures, and test values shall be performed and evaluated in accordance with NETA ATS, the manufacturer's recommendations, and paragraph entitled "Field Quality Control" of each applicable specification section. Tests identified as optional in NETA ATS are not required unless otherwise specified. Equipment shall be placed in service only after completion of required tests and evaluations of the test results have been completed. Contractor shall supply to the testing organization complete sets of shop drawings, settings of adjustable devices, and other information necessary for an accurate test and inspection of the system prior to the performance of any final testing. Perform acceptance tests and inspections on Diesel-Electric

Generators, Uninterruptible Power Supply (UPS) Systems, 400-Hertz Motor Generator Sets, 400-Hertz Solid State Frequency Converters, Automatic Transfer Switches, and Switchboards and Switchgear.

D50 1.4 DESIGN SUBMITTALS

Design Submittals shall be in accordance with PTS Section Z10, *General Performance Technical Specifications*, UFGS Section 01 33 10.05 20, *Design Submittal Procedures,* UFC 1-300-09N, *Design Procedures,* and UFC 3-500-10N, *Electrical Engineering*.

In addition, UFGS sections listed below or in the body of the PTS text are to be used by the Designer of Record (DOR) as a part of the design submittal. If the UFGS products or systems are applicable to the project, the DOR shall edit these referenced UFGS sections and submit them as a part of the design submittal specification. Edit the specification sections in accordance with the limitations stated in PTS Section Z10, *General Performance Technical Specifications*.

UFGS 26 23 00, *Switchboards and Switchgear*

UFGS 26 29 23, *Variable Frequency Drives System Under 600 Volts*

UFGS 26 32 13.00 20, *Single Operation Generator Sets*

UFGS 26 32 26, *Motor Generator Sets, 400 Hertz*

UFGS 26 33 53.00 20, *Uninterruptible Power Supply (UPS)*

UFGS 26 35 43, *400 Hertz Frequency Converters*

UFGS 26 36 23.00 20, *Automatic Transfer Switches*

UFGS 28 20 00.00 20, Electronic Security System (ESS), Commercial

D50 1.5 CONSTRUCTION SUBMITTALS

Submit construction submittals in accordance with PTS Section Z10, *General Performance Technical Specifications*. In addition to the PTS Section Z10 requirements, the Designer of Record (DOR) shall approve the following construction submittals as a minimum:

Electrical Equipment, OMSI information for equipment, and Quality Assurance Submittals listed above.

Provide certification that all adjustable protective device settings have been set in accordance with the coordination study for the as-built equipment and configuration.

D5010 ELECTRICAL SERVICE AND DISTRIBUTION

D501001 MAIN TRANSFORMERS

Pad mounted distribution transformers shall be in accordance with PTS Section G40, *Site Electrical Utilities*.

D501002 SERVICE ENTRANCE EQUIPMENT

When a switchboard or switchgear is required, the Designer of Record shall utilize UFGS Section 26 23 00 for the project specification, and shall submit the edited specification section as a part of the design submittal for the project.

D501003 INTERIOR DISTRIBUTION TRANSFORMERS

D501004 PANELBOARDS

Panelboards shall comply with UL 67 and UL 50. UL 869A shall apply if used as service entrance equipment. Panelboards for non-linear loads shall be UL listed, including heat rise tested, in accordance with UL 67, except with the neutral assembly installed and carrying 200 percent of the phase bus current during testing.

Provide molded case circuit breakers in accordance with UL 489. Ground fault circuit interrupting circuit breakers shall comply with UL 943. Arc fault circuit breakers shall comply with UL 489 and UL 1699.

D501005 ENCLOSED CIRCUIT BREAKERS

Provide molded case circuit breakers in accordance with UL 489. UL 869A shall apply if used as service entrance equipment. Provide with solid neutral when grounded conductor is present.

D501006 MOTOR CONTROL CENTERS

Motor control centers shall comply with UL 845, NEMA ICS 2, and NEMA ICS 3. Motor controllers shall comply with UL 508. Provide disconnecting means capable of being locked out for machines and other equipment to prevent unexpected startup or release of stored energy in accordance with 29 CFR 1910.147.

D501006 1.1 VARIABLE FREQUENCY DRIVES (VFD)

When Variable Frequency Drives are required, the Designer of Record shall utilize UFGS Section 26 29 23 for the project specification, and shall submit the edited specification section as a part of the design submittal for the project.

D501090 OTHER SERVICE AND DISTRIBUTION

D501090 1.1 TRANSIENT VOLTAGE SURGE SUPRESSORS (TVSS)

D501090 1.2 BUSWAY

Busway shall comply with NEMA BU 1 and UL 857.

D5020 LIGHTING AND BRANCH WIRING

D502001 BRANCH WIRING

Provide wiring and connections for special outlets where required.

All homerun circuits must contain no more than 3 phase conductors.

Switches shall comply with NEMA WD-1 and UL 20.

D502002 LIGHTING EQUIPMENT

Installation shall meet requirements of manufacturer’s recommendations and the additional requirements for “Severe Seismic Disturbance” contained in ASTM E 580. Fixture support wires shall conform with ASTM A 641/A 641M, galvanized regular coating, soft temper.

D502002 1.1 BALLASTS

Electronic ballasts shall include a 5-year warranty.

D5030 COMMUNICATIONS AND SECURITY

D503001 TELECOMMUNICATIONS SYSTEMS

D503002 PUBLIC ADDRESS SYSTEMS

D503003 INTERCOMMUNICATIONS SYSTEMS

D503004 TELEVISION SYSTEMS

D503004 1.1 CLOSED CIRCUIT TELEVISION (CCTV) FOR VIDEO TRAINING

D503004 1.2 COMMUNITY ANTENNA SYSTEM (CATV)

D503005 SECURITY SYSTEMS

D503005 1.1 ELECTRONIC SECTURITY SYSTEMS (ESS)

When an ESS system is required, the Designer of Record shall utilize UFGS Section 28 20 00.00 20 for the project specification and shall submit the edited specification section as a part of the design submittal for the project.

D5030005 1.2 PROTECTED DISTRIBUTION SYSTEMS (PDS)

Protected Distribution Systems shall be in accordance with UFC 3-580-10 and IA PUB-5239-22, Information Assurance Protected Distribution System (PDS) Guide Book.

D5030005 1.3 SENSITIVE COMPARTMENTED INFORMATION FACILITIES (SCIF)

Electrical systems installed within SCIF spaces or facilities shall be in accordance with the Director of Central Intelligence Directive (DCID) 6/9.

D503090 OTHER COMMUNICATIONS AND ALARM SYSTEMS

D5090 OTHER ELECTRICAL SERVICES

D509001 GENERAL CONSTRUCTION ITEMS (ELECTRICAL)

D509002 EMERGENCY LIGHTING AND POWER

D509002 1.1 EMERGENCY LIGHTING

D509002 1.2 EMERGENCY GENERATORS

When an emergency generator is required, the Designer of Record shall utilize UFGS Section 26 32 13.00 20 for the project specification, and shall submit the edited specification section as a part of the design submittal for the project.

D509002 1.3 AUTOMATIC TRANSFER AND BYPASS/ISOLATION SWITCHES

When an Automatic Transfer Switch is required, the Designer of Record shall utilize UFGS Section 26 36 23.00 20 for the project specification, and shall submit the edited specification section as a part of the design submittal for the project.

D509002 1.4 UNINTERRUPTIBLE POWER SUPPLY (UPS) SYSTEM

When a UPS system is required, the Designer of Record shall utilize UFGS Section 26 33 53.00 20 and shall submit the edited specification section as a part of the design submittal for the project.

D509003 GROUNDING SYSTEMS

D509004 LIGHTNING PROTECTION

D509005 ELECTRIC HEATING

D509006 ENERGY MANAGEMENT CONTROL SYSTEM

D509090 OTHER SPECIAL SYSTEMS AND DEVICES

D509090 1.1 400 HERTZ SYSTEMS

The Designer of Record shall utilize UFGS Section 26 32 26 or UFGS Section 26 35 43 for the project specification, and shall submit the edited specification section as a part of the design submittal for the project.

--End Of Section--

SECTION E10

EQUIPMENT
4/08

E10 GENERAL

E10 1.1 GENERAL REQUIREMENTS

Where required by the project program, the contractor shall obtain the services of equipment specialists to specify any audiovisual, shop, fitness equipment, or other specialty equipment. Equipment specialists shall not have any affiliation with the product specified. All specialty equipment will be installed by qualified installers regularly engaged in installing the specialty equipment. Systems furnishings installers must be the systems furniture manufacturer’s dealer of record.

E10 1.2 DESIGN GUIDANCE

Provide the design and installation in accordance with the following references. This Performance Technical Specification (PTS) adds clarification to the fundamental requirements contained in the following Government Standards. The general requirements of this PTS section are located in PTS Section Z10, *General Performance Technical Specification*.

Industry standards, codes, and Government standards that are referenced in the section text that are not found in the Unified Master Reference List (UMRL) in the Construction Criteria Base (CCB) at the Whole Building Design Guide Website (www.wbdg.org), are listed below for basic designation identification. Comply with the required and advisory portions of the current edition of the standard at the time of contract award.

E10 1.2.1 Industry Standards and Codes

Loading Dock Equipment Manufacturers' Association (LODEM)

E10 1.2.2 Government Standards

UNIFIED FACILITIES CRITERIA (UFC)

UFC 3-100-10N, *Architecture*

UFC 3-120-10, *Interior Design*

E10 1.3 PERFORMANCE VERIFICATION AND COMPLIANCE TESTING

Verification of satisfactory special equipment and furnishing systems performance shall be via Performance Verification Testing, as detailed in this section of the RFP.

E10 1.3.1 Field Tests for Dock Leveling Equipment

a. Roll-over Tests - Move roll-over load of 20,000 pounds (9,072 kg) over the dock leveler between the bed of a freight carrier and the building loading dock surface for ten cycles. With the ramp extension retracted and the ramp platform leveled with the building loading dock surface, run a 20,000 pound (9,072 kg) roll-over load over the ramp in various directions for 20 cycles. No permanent deformation or hydraulic fluid leakage shall occur subsequent to examination after these tests.

b. Drop Tests - Twice, drop test the dock leveler at the indicated rated capacity as follows: With the load on the platform and the load resting on a vehicle carrier bed not less than 10 inches (254 mm) above loading dock surface, pull the carrier or pull away from the lip, leaving the loading ramp unsupported. The measured vertical drop of the dock leveler taken at the point where the lip rests on the vehicle carrier shall not exceed 4 inches (102 mm) during each of the drop tests. Inspect the loading ramp after each drop and ensure no damage or distortion to the mechanical, electrical, or structural components. There shall be no leakage from the hydraulic system.

c. Acceptance Tests - Perform an acceptance test in the presence of the dock leveler manufacturer and the Contracting Officer subsequent to the roll-over load and drop tests. Conduct operation of the equipment through all of its motions and specified checks as follows: (a) extend lip to rest on a variety of freight carriers with beds up to 12 inches (305 mm) above and below deck level; (b) test 102 mm (4 inches) drop limitation with 7,000 pound (3,175 kg) load on ramp, evenly distributed; (c)test level compensation with the ramp, loaded with a minimum of 7,000 pounds (3,175 kg); and (d) test proper compensation (float) for various compression of counter-springs, with ramp loaded and unloaded.

G20 1.4 DESIGN SUBMITTALS

Design Submittals shall be in accordance with UFGS section 01 33 10.05 20, *Design Submittal Procedures,* UFC 1-300-09N, *Design Procedures,* UFC 3-100-10N, *Architecture,* UFC 3-120-10, *Interior Design.*

E10 1.5 CONSTRUCTION SUBMITTALS

Submit construction submittals in accordance with PTS Section Z10, *General Performance Technical Specifications*. In addition to the Z10 requirements, the Designer of Record (DOR) shall approve the following construction submittals as a minimum:

Field tests of equipment, vault door, loading dock equipment, kitchen equipment and unit kitchens.

E1010 COMMERCIAL EQUIPMENT

E101001 SECURITY & VAULT EQUIPMENT

E101001 1.1 VAULT AND DOORS

The Vault (“Weapons Storage Area” (WSA) or “Armory”, or other title according to the project program) space shall be designed in accordance with criteria in MIL-HDBK-1013/1A to provide at least 10 minutes of delay time against low and medium threat severity levels of forced entry. The space is required to be built to the construction standards described in MIL-HDBK-1013/1A for Class A vaults. The reinforced concrete must have minimum 28-day compressive strength of at least 3000 PSI (20,684 kPa) and the floor, walls, and ceiling/roof components of this space must all be cast in place and at least 8 inches (200 mm) thick. The door into the vault must be a GSA-Approved and labeled Class 5 Security Vault Door that conforms to Federal Specification AA-D-00600. Provide door manufacturer’s modified standard or custom Day Gate, designed for use with the vault door furnished, for access control and weapons issue. Except for the door opening, penetrations and openings through the structural “security” envelope of the floor, walls, and ceiling/roof of the Vault that are 96 sq. inches (618 sq. cm) or greater with the least dimension greater than 6 inches (150 mm) are not allowed. PTS Section D50, *Electrical*, includes

requirements for Intrusion Detection System (IDS) within the space and for Security Lighting at the outside of the Vault Door to the space.

E101001 1.1.1 Set-backs

Where the perimeter walls of the WSA spaces are part of the facility exterior walls, the vault walls shall be set back from the exterior part of the exterior wall to allow at least 4 inches (100 mm) for the normal wall facing to cover the vault walls.

E101001 1.1.2 Egress

Where a WSA space exceeds 1000 square feet (90 sq m) in floor area, or will have more than eight occupants, the space shall have a minimum of 2 exits for safety purposes. When more than one entrance / exit is required, each shall be equipped with a Security Vault Door, with only one used for normal entry access.

E101001 1.2 SECURITY VAULT DOOR

Security Vault Door must be GSA-Approved and labeled Class 5 Security Vault Door that conforms to Federal Specification AA-D-00600. Provide GSA-Approved and labeled Class 5 Security Vault Door that conforms to Federal Specification AA-D-00600. Door(s) for normal or special entry access shall be Class 5, either Type IIR- right opening swing without optical device or Type IIL- left opening swing without optical device as determined by design arrangement, Style K- Key change combination lock, Design S- single lock.

Where a second or additional door is required for safety purposes, door(s) for exit only shall be Class 5, either Type IR- right opening swing with optical device or Type IL- left opening swing with optical device as determined by design arrangement, Style K- Key change combination lock, Design B- no exterior hardware.

E101001 1.3 DAY GATE

Provide vault door manufacturer’s modified standard or custom day gate designed for use with vault door furnished, for access control and weapons issue. Day gate construction shall be minimum 10 gage (3.4 mm) steel flattened and expanded metal welded to a 1 inch (25 mm) minimum steel channel or angle welded frame; expanded metal pattern shall be 1 inch by 1-3/4 inch (25 by 45 mm) diamond grid. Maximum clearance between sides, top and bottom of the day gate and the vault door-frame and floor shall be 1 inch (25 mm) when the day gate is closed. Provide gate hinged on same side as the vault door, swinging to 180 degrees into the vault from closed to open positions. Provide day gate with locking device operable from both sides; the outside by key and the inside by key, knob, lever, or deadbolt; the inside locking device shall either be positioned so that it is not accessible from the outside or it shall be operable by key only. Day gate shall include an issue port opening, cover with locking mechanism, and shelf. The issue port shall be a framed opening welded to the day gate frame with a hinged door cover. The hinged door shall be minimum 18 gage (1.2 mm) steel and shall be lockable from the inside only. The opening shall be 8 inches (200 mm) high and 12 inches (300 mm) wide; tolerances are plus or minus 0.125 inch (3.2 mm). When the issue port is closed, the hinged door cover shall match the opening to within 0.0625 inch (1.6 mm). The shelf shall be minimum 16 gage (1.5 mm) stainless steel, 12 inches (300 mm) deep by 12 inches (300 mm) wide to match the port opening, and shall be capable of withstanding a vertical force of 100 lbf (445 N) at any point without deformation. Provide the manufacturer’s standard painted finish to match that of the vault door. The day gate shall not interfere with the operation of vault door inner escape device.

E1020 INSTITUTIONAL EQUIPMENT

Institutional equipment includes items that are normally found in hospitals, laboratories, auditoriums, and libraries.

E102001 MISCELLANEOUS COMMON FIXED & MOVABLE EQUIPMENT

This section shall include fixed workbenches, hazardous and non-hazardous shop materials cabinetry, shop tools, and other fixed and movable equipment.

E102009 AUDIO-VISUAL EQUIPMENT

E102009 1.1 CEILING MOUNT FOR PROJECTOR

Provide the ceiling mounted hardware for a digital projector, to be coordinated with support blocking (see PTS Section C10, *Interior Construction*) and electrical and data connections (see Section D50, *Electrical*).

E1030 VEHICULAR EQUIPMENT

E103001 LOADING DOCK EQUIPMENT

This paragraph covers the requirements for dock bumpers, truck-trailer restraining devices, and industrial, mechanical and electro-hydraulic dock levelers of a fixed hinged type. All loading dock equipment shall be Navy certified.

Provide a Loading Dock Equipment System for the protection of service docks and for the loading and unloading of service vehicles.

E103001 1.1 DOCK LEVELERS

Based on the performance requirements of the project program, provide ANSI MH30.2 (see LOEDM) steel tread plate lip and platform, hinged and supported from beneath by steel framework that contains lifting, positioning, and lowering assembly. The design shall permit washing with water and detergents, and operation in an ambient temperature from 0 degrees F to plus 110 degrees F (–18 degrees C to plus 43 degrees C). Minimum roll over capacity shall be not less than 20,000 pounds (9,072 kg).

E103001 1.1.1 Height Adjustment

Provide a ramp with a minimum incline adjustment of 24 inches (600 mm). Divide 12 inches (300 mm) above and 12 inches (300 mm) below the platform height.

E103001 1.1.2 Loading Ramp Compensation

a. Freight Carrier Out of Level - Allow a minimum correction of one inch for each 18 inches (450 mm) and maximum of 4-inch (100 mm) correction of ramp width over the width of the ramp.

b. Loading and Unloading of the Freight Carrier - When the lip is extended, provide a 4-inch (100 mm) compensation for carrier spring deflection to allow full contact between the lip and the carrier bed.

E103001 1.1.3 Safety Devices

a. Electro-hydraulic System - Provide a device to automatically prevent a drop of more than 4 inches (100 mm) of the lip should the freight carrier move away from the dock leaving the lip unsupported.

b. Mechanical System - Provide a three-position safety system to limit platform fall to dock level and 4 and 8 inches (100 and 200 mm) below dock level.

c. Dock Bumpers - Provide laminated rubber, tire fabric or equivalent dock bumpers along the length of the loading dock.

E103001 1.1.4 Operation

a. Mechanical Control - Mechanical chain activated, with extension-spring operation and counter-balance non-manual, raising and lowering system.

b. Electro-Hydraulic Control - Provide dock leveler with pushbutton control, heavy-duty dust tight and oil tight rated in accordance with NEMA ICS 2, Part ICS2-216 for alternating current.

c. Construction and Materials - The entire live load carrying surface of the ramp and rear attachment shall be not less than 1/4-inch(6 mm) thick, 55,000 PSI (379,200 kPa) minimum yield strength, low alloy, non-skid steel tread plate.

d. Toe Guards - Provide sides or edges of the ramps which rise above the surrounding loading dock with sheet carbon steel skirts or toe guards of minimum 14 gage nominal thickness.

E103001 1.1.5 Electro-Hydraulic Lift System

Provide a complete and separate system for each dock leveler. Design system to withstand not less than 150 percent of the design operating pressure. Provide hose, fittings, pipe and tubing with working pressures based upon a minimum 4 to 1 safety factor of bursting pressure.

E103001 1.1.6 Electrical Requirements

NFPA 70, NEMA ICS 2, NEMA ICS 6 and NEMA MG 1

a. Motor - Conform to NEMA MG 1 and continuous duty or 60-minute time rated, industrial type, single speed rated for operating conditions.

b. Control - NEMA ICS 2, size 0 controller for heavy industrial service.

c. Transformer - Totally enclosed, self-cooled, dry type transformer. Incorporate circuit breakers with ground fault interrupting protection conforming to UL 943.

E103001 1.1.7 Structural Warranty

Present a manufacturer's warranty certifying the leveler against operational malfunction or structural failure, or both, for a period of 10 years from the date of acceptance by the Government. Warranty may exclude failure through overloading evidenced by member breakage or residual deformation; but it may not exclude breakage of welds or fastenings, fatigue breakage of components, or wear of moving parts. Provide warranty to cover the full costs of repairs, or replacements in case of a nonrepairable failure.

E103001 1.1.8 Accessories

a. Dock Truck or Trailer Restraining Device - Provide self-aligning device, with a positive restraining force of not less than 18,000 pounds (8,165 kilograms). Device shall service all truck or trailers with ICC bars located between 12 and 30 inches (300 and 750 mm) above ground level.

E103002 WAREHOUSE EQUIPMENT

This paragraph covers the requirements for storage racks, heavy duty shelving, material handling conveyors, and other warehouse equipment. See the project program.

E103003 AUTOMOTIVE SHOP EQUIPMENT

This paragraph covers the requirements for automotive vehicle lifts meeting the requirements of ANSI/ALI ALCTV-1998 standards, and other automotive shop equipment such as pneumatic liquids delivery systems. See the project program.

E1040 GOVERNMENT FURNISHED EQUIPMENT

Refer to the project program.

E1090 OTHER EQUIPMENT

E109001 FOOD SERVICE EQUIPMENT

Provide Food Service Equipment and the kitchen design in accordance with UFC 4-722-01, *Dining Facilities*. This paragraph covers the items of commercial food service equipment. Included are items used for liquid and solid food storage, food preparation, display, serving, and clean up equipment. Provide 180 degree F (82 degree C) hot water or chemical treatment for sinks, dishwashers, pot washers, and exhaust ventilator wash down systems.

E109001 1.1 COMMERCIAL FOOD SERVICE EQUIPMENT

E109001 1.1.1 Equipment Materials

Fabricate custom and commercial equipment in accordance with NSP 2.

a. Stainless Steel Sheets - ASTM A167, 18-8 Composition, Type 302 or 304 or 316, non-magnetic, with a No. 4 finish on the exposed face.

b. Tubing - ASTM A 270

c. Framing and Cross Bracing - ASTM A 276, Type 302 or Type 304 or Type 316

d. Copper Tubing –

1) Tube - ASTM B 88, Type K, annealed, for buried or embedment in concrete, and Type L, hard drawn, for above grade installation.

2) Fittings - ANSI B16.18, above grade, ASME B16.22 or ASME B16.26, above or below grade.

e. Welded Joints - Use tungsten inert gas process. Use filler metal compatible with the material being welded. Make all visible welds ductile and of same color as adjoining surfaces. Coat welds in hidden areas that are not finished by grinding and polishing and the accompanying discoloration in the factory with a metallic-based paint to prevent progressive corrosion. Grind exposed welded joints flush with the adjoining material and finish and polish to match the adjoining surface. Grind off excess metal and smooth to a No. 4 finish. Remove imperfections such as pits, runs, sputter, cracks, low spots, voids and buckle.

Penetrate entire thickness for the entire length of the joint; make joints flat, continuous and homogeneous with the sheet metal without reliance on straps under seams or spot welding. When stainless steel is joined to dissimilar metals, use stainless steel for fastening devices and welding material.

f. Solder - ASTM B 32, 95.5 tin-antimony solder or other lead-free solder for contact with potable water or food. Provide ASTM B 32, alloy grade 50B for temperatures up to 150 degrees Fahrenheit (65 degrees Celsius).

E109001 1.1.2 Custom-Fabricated Counters, Dishwasher Counters, and Sinks

Fabricate of 14 gage (1.8 mm) stainless steel, with all shop seams and water tight welded corners ground smooth, and polished. Pitch all flat surfaces to drain and eliminate any chance of standing water. Counters and sinks shall be furnished complete with integral stainless steel backsplashes, side splashes, and legs with adjustable feet.

a. Sinks - Provide integral sinks in accordance with the requirements of NSF 2, and ASTM A112.19.3M. Provide minimum of 0.75 inch (19 mm) radius on all corners.

E109001 1.1.3 Exhaust Ventilators

Exhaust ventilators shall conform to NFPA 96, UL 710, and SMACNA DCS. Fabricate exhaust ventilators of minimum 18 gage stainless steel in segments not longer than 12’-0”. Provide centrifugal grease-extracting design to remove 95% of matter from the air with non-removable extracting baffles located in the plenum chamber. Exhaust ventilators shall provide integral make-up air system in accordance with NFPA 96. Provide automatic wash-down cycle and fan control on adjacent wall.

a. Fire Damper - Provide mechanically driven damper and damper control. Activate by heat-sensing thermostat set to react to a temperature of 350 degrees F (177 degrees C) in exhaust duct at exhaust ventilators.

b. Fire Protection System - Provide a pre-engineered wet system in accord with NFPA 96.

E109001 1.1.4 Pre-Fabricated Walk-in Refrigerators and Freezers

Provide walk-in units manufactured for food service use conforming to NSF 7, UL 207, and UL 471. Provide refrigeration unit complying with ASHRAE 15. Outside compressors, if used, require winter controls, housing, and crankcase heater. Provide monitoring system to alarm abnormally low or high temperatures, and personnel safety alarm. If the unit utilizes the floor of the facility as an interior surface of the unit, it shall be insulated and separated from adjacent floors.

E109001 1.1.5 Food Waste Disposer - ASTM F917-91

E109001 1.1.6 Beverage Dispenser, Non-Carbonated, Refrigerated - ASTM F918-96

E109001 1.1.7 Food Slicing Machine - ASTM F919-95

E109001 1.1.8 Food Mixing Machine - ASTM F952-99

E109001 1.1.9 Powdered Iced Tea Dispenser - ASTM F1023-99

E109001 1.1.10 Frying and Braising Pan, Tilting - ASTM F1047-95

E109001 1.1.11 Food Cutter - ASTM F1126-97

E109001 1.1.12 Food Waste Pulper - ASTM F1150-88

E109001 1.1.13 Cooker, Steam - ASTM F1217-92

E109001 1.1.14 Ovens, Microwave - ASTM F1360-93

E109001 1.1.15 Vegetable Peeling Machine - ASTM F1371-99

E109001 1.1.16 Combination Oven - ASTM F1495-99

E109001 1.1.17 Food Processor - ASTM F1568-99

E109001 1.1.18 Kettle, Steam Jacketed (20-200 gal) Floor or Wall Mounted - ASTM F1602-95

E109002 1.1.19 Kettle, Steam Jacketed (32 oz-20 gal), Table Mounted - ASTM F1603-95

E109001 1.1.20 Freezer, Ice Cream, Soft Serve - ASTM F1604-95

E109001 1.1.21 Griddle, Single or Double Sided - ASTM F1919-98

E109001 1.1.22 Deep Fat Fryers - ASTM F1963-99a

E109001 1.1.23 Dough Divider/Rounder - ASTM F1966-99

E109001 1.1.24 Dishwashing Machines:

a. Hot Water Sanitizing Rack Type, ASTM F857-96

b. Hot Water Sanitizing Single Tank, ASTM F858-96

c. Hot Water Sanitizing, Multi-Tank, ASTM F859-95

d. Hot Water Sanitizing, Multi-Tank, Conveyor, ASTM F860-96

e. Chemical Sanitizing, Stationary Rack, ASTM F953-94

f. Chemical Sanitizing, Fresh Water Rinse, ASTM F1022-95

g. Hot Water Sanitizing, Oval Conveyor, Multi-tank, ASTM F1237-93

E109001 1.1.25 Pot and Pan Washing Machines

a. Heat Sanitizing, Oscillating Arm Type, ASTM F1202-97

b. Heat Sanitizing, Rotary Conveyor, ASTM 1203-97

c. Heat Sanitizing, Rack Type, Rotary Spray, ASTM F1114-94

E109001 2.1 RESIDENTIAL OR LIGHT COMMERCIAL ELECTRIC KITCHEN EQUIPMENT

E109001 2.1.1 Cooking Top - Conform to UL 197 and UL 858.

E109001 2.1.2 Freezer - UL 250, minimum 14 cubic feet (0.39 cubic meters), frost-free.

E109001 2.1.3 Refrigerator - UL 250, refrigerator with frost-proof freezer, minimum 14.6 cubic feet (0.41 cubic meters).

E109001 2.1.4 Freestanding Ice Maker - UL listed and NSF approved; self-contained, air-cooled model, minimum ice production of 355 pounds (161 kg) per 24 hours, and a minimum bin storage capacity of 180 pounds (82 kg) of ice cubes.

E109001 2.1.5 Griddle - UL 197 and NSF 2, built-in counter-top model. Minimum capacity shall be 260 pancakes or 420 hamburgers 4 ounces (110 g) per hour.

E109001 2.1.6 Microwave Oven - UL 923, minimum 1 cubic foot (0.03 cubic meter) capacity.

E109001 2.1.7 Oven - UL 858, self-cleaning and built-in.

E109001 2.1.8 Trash Compactor - UL 1086, under-counter model with storage compartment and 20 gallon (75 liter) trash disposal bag capacity.

E109001 2.1.9 Kitchen Exhaust Hood - NFPA 96 and NSF 2, factory fabricated of minimum 18 gage stainless steel.

E109001 2.1.10 Range Hood - UL 858, vented or non-vented with two-speed fan.

E109001 2.1.11 Dishwasher - UL 921 or UL 749 with detergent dispenser. For heavy-duty dishwasher, provide stainless steel commercial grade with approximately 300-dish per hour and 540 glasses per hour ratings.

E109001 2.1.12 Residential Garbage Disposal - UL 430, stainless steel, continuous feed with minimum 1/3 hp motor.

E109002 UNIT KITCHENS

E109002 1.1 UNIT KITCHENS

Unit kitchens must be complete with countertops, sinks, faucets, appliances, and accessories. Comply with UFAS/ADAAG in units for the disabled. Provide high pressure laminate or natural wood finish.

E109002 1.2 UNIT KITCHEN COMPONENTS

a. Cabinets - ANSI/FCMA A161.1 wood and plywood cabinetry with drainers and cabinet doors.

1) Provide 3/4-inch (19 mm) solid wood for face framing, drawer fronts, and shelves up to 36 inch (91.44 cm) wide. Cabinet body members require spline, biscuit, dowel or dado joining.

2) Provide 1/2-inch (12.8 mm) solid wood for drawer boxes with dovetail or dowelled joints.

3) Provide 3/8-inch (9 mm) plywood for cabinet box and toe board.

4) Provide cabinet doors of High Pressure Laminate covered medium density fiberboard or stile and rail doors.

b. Countertop - Provide ASTM 2124.3 and ASTM 2124.6, solid polymer countertop and 3-1/2 inch (89 mm) backsplash.

c. Sink and Faucet - Provide ANSI A112.18.1M, NSF International Standard 61 sink and faucet. Section 9 for sink and faucet. Provide large 22 gauge stainless steel sink with basket strainer in w with water stopper. Faucet shall be a washerless cartridge system

d. Refrigerator-Freezer – 5 cubic foot minimum undercounter refrigerator freezer. Provide interior light, defrost, adjustable shelving, adjustable thermostat features, and zero degree freezer.

e. Microwave Oven/Ventilation Hood Combination. Provide 1.4 cubic foot 900 watt minimum, microwave/hood above cooktop. Ductless hood must be convertible to ducted at the project site.

f. Cooktop – Provide drop-in 2 burner black ceramic cooktop with 1200 watt elements.

g. Dishwasher – Provide 24 inch wide Energy Star Large capacity dishwasher.

h. Accessories

1) Back wall shield and end wall shields when against an end wall.

2) Countertop fluorescent lighting.

3) Drawer slides rated for 100 pound capacity.

4) Door hinges to be adjustable, self-closing, and configured to allow screw application to cabinet door from two directions.

E109090 OTHER SPECIALIZED FIXED AND MOVABLE EQUIPMENT

Specialized fixed and moveable equipment not described by the other assembly categories.

E109090 1.1 WEAPONS RACKS

Weapons Storage Racks may be purchased or may be steel fabrications. Comply with OPNAVINST 5530.13c and standard operating procedure for the facility.

E109090 1.2 GEAR DRYING CAGES

Drying cages (racks) for SCUBA gear may be purchased or may be fabrications. Comply with standard operating procedures for the facility.

-- End of Section --

SECTION E20

FURNISHINGS
4/08

E20 GENERAL

E20 1.1 DESIGN GUIDANCE

Provide the design and installation in accordance with the following references. This Performance Technical Specification (PTS) adds clarification to the fundamental requirements contained in the following Government Standards. The general requirements of this PTS section are located in PTS Section Z10, *General Performance Technical Specification*.

Industry standards, codes, and Government standards referenced in the section text that are **not** found in the Unified Master Reference List (UMRL) in the Construction Criteria Base (CCB) at the Whole Building Design Guide Website, are listed below for basic designation identification. Comply with the required and advisory portions of the current edition of the standard at the time of contract award:

E20 1.1.1 Industry Standards and Codes

E20 1.1.2 Government Standards

UNIFIED FACILITIES CRITERIA (UFC)

UFC 03-100-10, *Architecture*

UFC 03-120-10, *Interior Design*

UFC 1-300-09N, *Design Procedures*

E20 1.2 GENERAL REQUIREMENTS

The Contractor shall have an Interior Designer, certified by the National Council for Interior Design Qualification (NCIDQ) prepare both the FF&E and the SID Package and participate in any design charettes to develop the building floor plan. As required, the Contractor shall obtain services of equipment specialists to specify the audiovisual, shop, or specialty equipment. The Interior Designer and any specialists shall not be affiliated with any furniture dealership/vendor or manufacturer. The Government Interior Designer reserves the right to approve/disapprove the qualifications of the Contractor’s Interior Designer.

Systems furnishings installers must be the systems furniture manufacturer’s approved dealer of record. In addition, installation dealers must be located within a 100 mile radius of the project site unless approved by the government Interior Designer.

E20 1.3 DESIGN SUBMITTALS

Design Submittals shall be in accordance with Z10, *General Performance Technical Specifications*, UFGS section 01 33 10.05 20, *Design Submittal Procedures,* UFC 1-300-09N, *Design Procedures, and* UFC 03-120-10, *Interior Design*.

E20 1.4 CONSTRUCTION SUBMITTALS

Submit construction submittals in accordance with PTS Section Z10, *General Performance Technical Specifications*. In addition to the Z10 requirements, the Designer of Record (DOR) shall approve the following construction submittals as a minimum:

Art work and FF&E Package

E2010 FIXED FURNISHINGS

E201001 FIXED ARTWORK

E201002 WINDOW TREATMENTS

Provide interior window coverings, associated hardware and controls at each exterior window and at any interior view window where privacy may be required. Refer to the Project Program for size, pattern and style of window treatments. At a minimum, functional window coverings such as blinds or solar shades are required on all projects.

E201002 1.1 BLINDS

Venetian blinds shall be one-inch horizontal room-darkening commercial grade aluminum at a minimum thickness of 0.008-inch (0.2 mm) (after coating) with a minimum of 15 slats per foot (45.72 slats per meter). Blinds shall be provided at each exterior window and at any interior window where privacy may be required. One full size sample shall be provided and installed for review and approval.

E201002 1.2 SHADES

Provide energy efficient solar shading systems for exterior windows. The system shall maintain visibility while reducing glare, solar heat gain during the summer and heat loss during the winter. Openness configuration shall be no more than 5% for most areas. The system fabrics and components shall be dimensionally stable and shall be manufactured to withstand fading, fire, mildew, and soiling.

E201002 1.3 DRAPERIES AND HARDWARE

Draperies shall be manufactured under GSA contract as part of FF&E. Drapery can be accordion-fold, ripple-fold, or pinch-pleat with associated hardware suitable for the project requirements. All draperies shall meet the NFPA Code 701 California Fire Marshall’s flame retardant requirements.

E201003 SEATING (FIXED)

E201003 1.1 AUDITORIUM, LECTURE AND CLASSROOM SEATING

The system shall permit the standards to be installed on radial lines from a common center for which concentric circles are determined with each row of units utilizing common middle standards. Standards in each row shall be placed laterally so the aisle-end standards will be in alignment as indicated on seating layout drawing. The angle of inclination of backs shall be adjusted for variations in sightlines. Mechanical attachment of components shall be of sufficient flexibility so that when permanently assembled they will compensate for the changing dimensions laterally between standards caused by convergence toward the center. Seat and back attachments shall absorb inaccuracies in lateral spacing of standards at point of attachment caused by unevenness of floor. Varying lateral dimensions of backs and seats shall be in accordance with approved seating

layout. Minimum width of seating unit shall be 20 inches and may be used only to complete a specific row dimension.

E201003 1.2 FIXED TABLES FOR AUDITORIUM, LECTURE AND CLASSROOMS

Provide worksurfaces mounted to floor standards shall be tubular steel, sheet steel, or cast iron. The standards shall be formed to fit the floor incline so that the standards will be vertical. The feet shall be formed to eliminate tripping hazards and shall have holes for bolt attachment to the floor. Provide riser standards, cantilevered standards and aisle and end standards as required. Provide communications, data and power routing as required. Provide a high-pressure plastic laminate over medium density particleboard for the worksurfaces with coordinating vinyl or resin edge detail.

E2020 MOVABLE FURNISHINGS

Furnishings, Fixtures, and Equipment (FF&E) shall include furniture, shop equipment, audiovisual equipment, and specialty equipment. Weapon racks, drying cages, and lockers are not considered FF&E. FF&E shall be fully integrated with the building systems and finishes. FF&E may also include specialty items for which the customer activity shall be responsible for specifying.

Design and provide as required FF&E for all areas as developed during client programming. Design an FF&E package and prepare supporting plans and procurement data in accordance with the general interior design requirements in UFC 3-120-10.

E2020 1.1 FF&E PACKAGE

FF&E Package: Design and provide a fully usable and complete facility to include a FF&E movable furnishings package from Government supply sources according to Federal Acquisition Regulations. The FF&E will include, but not limited to, systems and modular furniture, training and conference furniture, seating, tables, artwork, decorative window covering, specialty furniture and equipment, dormitory room furnishings, and accessories. NAVSUP Blanket Purchase Agreements (BPA) must be used whenever possible. The government will provide separate funding for the FF&E package. Construction funds will not be used. The FF&E Package must include shipping, freight, handling, installation and the HAR percentage as applied to the final FF&E total cost.

E2020 1.1.1 Authorization

The government will provide separate funding for procurement of the FF&E package. Upon receipt of required funding, the Contractor shall be authorized by the Contracting Officer as an option to contract/task order to procure all FF&E using predominately negotiated price schedules from GSA or other Federal contracts. The amount of the modification will be the actual cost of these items from the Federal price schedules or NAVSUP BPAs, including any freight and installation charges from the furniture supplier as well as the contractor’s FF&E Handling and Administration Rate (HAR). The HAR includes all of the prime contractor’s effort related to storage, coordination, handling, administration of subcontractors, and all other associated costs and profit for the procurement of FF&E. The prime contractor will propose in the contract/task order solicitation the FF&E HAR. The contractor’s proposed HAR may not exceed 5% of the total FF&E costs, as noted on the bid schedule. No other charges, expenses, fees, or markups will be authorized.

The government Interior Designer will approve the final FF&E submittal. The FF&E package will be presented to the Project Manager and they will expect the Contractor to provide the FF&E exactly as specified.

The Contractor will receive a letter of authorization from the Contracting Officer citing the name of the furniture dealer and other information to use when accessing the government supply sources. FF&E items are subject to the Buy American Act.

E2020 1.2 PURCHASE AND INSTALLATION

The Contractor shall coordinate the building completion date with the installation dealer specified in the FF&E Package.

E2020 1.2.1 Use of GSA Schedules and Blanket Purchase Agreements (BPAs)

The Contractor will receive a letter of authorization from the contracting officer citing the name of the furniture dealer and other information to use when accessing the government supply sources or BPAs.

E2020 1.2.2 Deposits

The Contractor should anticipate providing a deposit of between 30% to 50% of the furniture costs when placing their order.

The Contractor shall also anticipate possible manufacturer price increases. Recommend ordering FF&E product once funds are received to avoid incurring additional costs. Delayed production and delivery dates can be noted at the time of order placement to coincide with building completion dates. Any costs incurred due to manufacturer price increases will be the burden of the contractor.

E2020 1.2.3 Davis Bacon Wages

Davis Bacon wages do not apply to the FF&E installer from the government supply sources. The workforce for the FF&E installation and delivery shall be separate and distinct from the labor workforce performing under the construction contract.

E2020 1.2.4 Sales Tax

The Contractor shall take maximum advantage of all exemptions from State and Local taxation authorities whether available to it directly or available to the contractor based on an exemption afforded the Government. The responsibility for paying applicable taxes rests with the contractor. Any state and local taxes applicable to the FF&E option will be included with the FF&E Dealer quote, if applicable. Under regulation 1521, Construction Contractors performing work for the US Government are not required to charge the government sales tax for the purchase of furniture

Any items purchased as building materials such as carpet are taxable.

E2020 1.2.5 Installation

The FF&E package includes the installation of all furniture and furnishings as specified in the FF&E package. The installation dealer specified in the FF&E package will receive, store, if required, transport to the project site, off load, inside deliver, unpack, assemble, place/install, clean, if required, and dispose of all the trash for all furniture and furnishings. The Contractor’s Interior

Designer will be responsible for specifying installation services and warehousing, as required, for all collateral equipment. It is the Contractor's responsibility to coordinate the building completion, occupancy, and furniture installation dates with the installation dealer specified in the FF&E package. Any costs associated with storing or delaying furniture shipments is the responsibility of the construction contractor.

E2020 1.2.6 Installation Warranty

All movable furnishings shall be installed in accordance with the manufacturer's instructions and warranty requirements. All movable furnishings shall be level and aligned and all doors, drawers and accessories shall be level and aligned to open, close and otherwise operate smoothly and securely. All systems furniture shall be installed by the systems furniture manufacturer's dealer of record and not the general Contractor. The Contractor shall repair, to the customer's satisfaction, any/all damage to any facility finish that is a result of the furniture installation and correct all punch list items for the furniture/furnishings.

E2020 1.2.7 Ordering Documentation

Two copies of all ordering documentation shall be provided to the contracting officer including Factory Order number (FO) and warranty information.

E2020 1.2.8 Post Award Changes

After award of the FF&E Option, any request to change the FF&E items must be submitted on the Contracting Officer. The FF&E Option has been accepted, priced, and negotiated based on specific line items as detailed in the final package. Those items have been agreed to considering color, specific type and quality of material, price, sustainability, life cycle, and dealership service. The Government will expect and require the contractor to provide exactly those items. Should changes become necessary, careful consideration is required to ensure that equivalent quality, price and other aspects of the item is maintained. Otherwise, price adjustments must be negotiated. The Contracting Officer will obtain approval from the Government Interior Designer/Collateral Equipment Manager in consultation with the client for any changes to the FF&E.

Post award FF&E manufacturer's price increases are the responsibility of the Contractor and shall not be transferred to the government. Recommend ordering FF&E product once funds are received to avoid incurring additional costs. Delayed production and delivery dates can be noted at the time of order placement to coincide with building completion dates.

E2020 1.3 BEST VALUE DETERMINATION

A best value determination is required by FAR 8.404 when placing orders against Federal Supply Schedules for the selection of furniture and furnishings. Best Value is defined in FAR 2.101 as ensuring that the order to be placed under a Federal Supply Schedule results in the lowest overall cost alternative (considering price, special features, administrative costs and client's needs) to meet the government's needs.

The Contractor's Interior Designer is responsible for the following written BVD justifications: 1) a specific justification for large value items over $100,000 such as systems furniture, A/V equipment, and dorm and quarters furniture if applicable to include price quotations from the manufacturers.

UNICOR must be included in the Best Value analysis; 2) Best Value Forms for all items over $3,000 from the manufacturer printed pricing information. The government Interior Designer will prepare an overall project justification certifying best value procedures were used by the contractor in the selections of the FF&E and vendors which is always required. The best value determination shall address issues such as space planning; human factors data related to anthropometrics (reach, clearance, adjustability), space, and acoustics; ergonomics; product quality (including construction and materials); sustainability features; product warranties; history of the product and manufacturer; ability to service products through dealers or others within a certain geographical range of the project; price (including freight); aesthetics; appropriateness; lighting, power and telecommunications systems management and coordination as related to the facility (when applicable); and other project specific factors as identified and required. Emphasis shall be to create a fully integrated design solution by providing quality products to meet the functional needs of the customer. Customer preferences shall be considered. The focus shall be on the best overall value. Use the GSA Best Value Determination forms provided in Part 6 of this RFP as guidelines for information to be provided.

E202001 MOVABLE ART WORK

The Contractor shall provide artwork for wall installation throughout the facility if he is only providing the FF&E package. The Contractor shall provide the artwork if he is procuring and installing the artwork according to the project program. Type of artwork to be determined by client requirements and budget as described in the Project Program for the project. Install framed artwork 63 inches (1600 mm) on center above finished floor. Include security mounting hardware as required.

E202002 MODULAR PREFABRICATED FURNITURE

E202002 1.1 FURNITURE SYSTEMS

Provide products from any of the following: Haworth, Steelcase, Herman Miller, Knoll, Teknion or Allsteel. The Government Interior Designer must approve any other systems furniture manufacturer. The typical workstation shall maximize each allocated space with worksurfaces and overhead closed storage with a surface to accommodate a Government provided computer. An attached articulated keyboard/mouse tray shall be selected or provided. Provide a monitor lift if required by the project program.

Powered raceways that will accommodate data and voice wire management shall be completely coordinated with all facility systems. The Contractor’s Interior Designer shall ensure the coordination of all electrical/data and furniture locations. The Contractor shall provide and coordinate all telecommunication receptacles and outlet requirements (i.e. RJ 11/45 receptacles and cover plates) with the Contractor’s Interior Designer and the systems furniture installer. The Contractor shall hardwire all pre-wired furniture with the building systems, and coordinate all IT and telephone connections.

E202002 1.2 MODULAR FREESTANDING FURNITURE AND WORKSTATIONS

Provide modular furniture with electrical/data cable trays and grommet holes for private offices and smaller work areas. Furniture may be specified from the same manufacturer as the systems furniture or Krug, Gunlocke, Kimball, HBF, or other manufacturer selected and approved by the government Interior Designer. An attached articulated keyboard/mouse tray (and monitor lift if required by the project program) shall be selected. Wood surfaces shall be provided as appropriate. Include accommodation for a Government provided computer and printer.

E202003 FREESTANDING FURNITURE

E202003 1.1 SEATING

E202003 1.1.1 Task Seating

Provide task seating that is fully ergonomic and coordinated by finish and scale to the workstation. Seating specifications to include: adjustable arms, back, height, and seat pan; 5 star base, appropriate castors for floor surface, lumbar support and availability in a minimum of two (2) sizes. Specify task seating from the same manufacturer of the systems or major furniture supplier or seating manufacturer approved by the government Interior Designer, provided it is determined to be a BPA “Best Value”.

E202003 1.1.2 Lounge, Reception and Guest Seating

Provide lounge, reception and guest seating with upholsteries consistent with the Project Program. Seating shall be easily reupholstered or have removable covers.

E202003 1.1.3 Training Room Seating

Provide seating with passive ergonomic features in that the seat and back offers some synchronized movement to allow the person seated to change positions. The support can be legs, sled base or single pedestal with 5 star base and casters as determined by user requirements. Provide high density stack chairs or nesting chairs as required. Provide attached, storable tablet arm as required.

E202003 1.2 STORAGE AND FILING

Provide freestanding storage units, file cabinets and file safes to accommodate the specific and unique storage requirements of the user. Coordinate closely with storage provided in PTS Section E10, *Equipment*, for high density filing.

E202003 1.3 CHILD DEVELOPMENT CENTERS

Provide all child care and classroom furnishings such as cribs, rocking chairs, feeding chairs, tables, seating, toy storage, book display storage, activity centers, freestanding floor activity toys, and any other required furnishings. Outdoor structural play equipment may be required. The cribs shall be of stainless steel construction. The chairs and tables shall be appropriately sized for each age group.

E202003 1.4 TRAINING/CONFERENCE ROOM FURNISHINGS

E202003 1.4.1 Tables

Provide single or multi-person worksurfaces or tables as determined from user requirements. Where computers are used, provide tables with wire management capability or pre-wired tables to accommodate data/telecommunications requirements. Powered raceways that will accommodate data and voice wire management shall be completely coordinated with all facility systems. The Contractor’s Interior Designer shall ensure the coordination of all electrical/data and furniture locations. The Contractor shall provide and coordinate all telecommunication receptacles and outlet requirements, hardwire all pre-wired furniture with the building systems and coordinate all IT and telephone connections.

E202003 1.4.2 Fixed Presentation Furnishings

Provide markerboards with porcelain on steel writing surfaces. Coordinate with building construction to include appropriate blocking or structural support for the installation of markerboards and tackboards.

E202003 1.4.3 Movable Presentation Furnishings

Provide audio-visual carts, lecterns, multi-media presentation cabinets to accommodate power/data requirements.

E202003 1.5 DINING ROOM FURNISHINGS

E202004 1.5.1 Cafeteria, Dining Hall Furnishings

Provide stackable seating and associated dollies for transport and storage, tables with folding or fixed legs or flip tops, and associated mobile carts for transport and storage, and trash and recycling containers.

E202004 1.5.2 Executive Dining Furnishings

Provide premium quality dining furnishings to include tables, chairs, buffet and serving units, hutches and cabinets as require by the Project Program.

E202004 RUGS & ACCESSORIES

E202004 1.1 RUGS

Provide Area or Accent rugs. Refer to the Project Program for requirements.

E202004 1.2 LAMPS

Provide decorative lamps. Refer to the Project Program for requirements.

E202004 1.3 INTERIOR LANDSCAPING

Provide artificial plants of a variety of sizes and ‘species’ to provide interior landscaping, including planters or containers for artificial plants to coordinate with the interior finishes and furnishings of the project.

E202004 1.4 OTHER DECORATIVE ITEMS

Refer to the Project Program for requirements.

E202090 OTHER MOVABLE FURNISHINGS

E202090 1.1 MISCELLANEOUS ITEMS

E202090 1.1.1

Provide waste receptacles, recycling containers, and ash urns as required.

E202090 1.1.2

Provide clocks, wall mounted or freestanding literature and coat racks, and mirrors as required.

E202090 1.1.3

Provide small appliances such as coffee pots, microwaves, refrigerators, washers, dryers, and icemakers, as required.

E202090 1.1.4

Provide mailroom work and storage tables, mail sorter units, carts and equipment tables as required.

-- End of Section --

SECTION F10

SPECIAL CONSTRUCTION
4/08

F10 GENERAL

F10 1.1 DESIGN GUIDANCE

Provide the design and installation in accordance with the following references. This Performance Technical Specification (PTS) adds clarification to the fundamental requirements contained in the following Government Standards. The general requirements of this PTS section are located in PTS Section Z10, *General Performance Technical Specification*.

Industry standards, codes, and Government standards referenced in the section text that are **not** found in the Unified Master Reference List (UMRL) in the Construction Criteria Base (CCB) at the Whole Building Design Guide Website, are listed below for basic designation identification. Comply with the required and advisory portions of the current edition of the standard at the time of contract award.

F10 1.1.1 Government Standards

UNIFIED FACILITIES CRITERIA (UFC)

UFC 03-100-10N, *Architecture*

UFC 03-300-10N, *Structural Engineering*

UNIFIED FACILITIES GUIDE SPECIFICATIONS (UFGS)

F10 1.2 PERFORMANCE VERTIFICATION AND ACCEPTANCE TESTING

Verification of satisfactory special construction system performance shall be via Performance Verification Testing, as detailed in this section of the RFP. Provide special tests and special inspections in accordance with UFGS Section 01 45 00.05 20, *Design and Construction Quality Control.*

F10 1.3 DESIGN SUBMITTALS

Design submittals shall be in accordance with Z10, *General Performance Technical Specifications*, UFGS section 01 33 10.05 20, *Design Submittal Procedures,* UFC 1-300-09N, *Design Procedures,* and UFC 3-100-10N, *Architecture,* and UFC 3-300-10N, *Structural Engineering.*

F10 1.4 CONSTRUCTION SUBMITTALS

Submit construction submittals in accordance with PTS Section Z10, *General Performance Technical Specifications.* In addition to the Z10 requirements, the Designer of Record (DOR) shall approve the following submittals as a minimum:

All structural elements necessary for construction.

For a pre-engineered metal building, provide shop drawings showing engineering data and complete building drawings, signed and sealed by a registered professional engineer.

F1010 SPECIAL STRUCTURES

F101001 METAL BUILDING SYSTEMS

F101001 1.1 DESIGN REQUIREMENTS

The metal building manufacturer shall have AISC FCD, category MB certification. The Metal Building System design shall be in accordance with the Metal Building Manufacturers Association (MBMA) *Low Rise Manual*.

All structural design shall comply with the provisions of PTS Section B10, *Superstructure*. The steel structure shall be as designed by the structural engineer. If used for thrust bracing, tie rods shall be concrete encased. Design framed openings structurally.

F101001 1.1.1 Additional Roof Design Requirements

a. Roof Decking – In addition to any other load requirements, roof decking shall be designed to support a 200-pound (91 kg) concentrated load at mid-span on a 12-inch (300 mm) wide section of deck.

b. When used as a diaphragm, roof decks shall be designed in accordance with SDEI DDM.

F101001 1.1.2 Deflection

a. Structural Members

1) Maximum deflection of main framing members and for roof members shall not exceed values required by the IBC.

2) Purlins and Roof Panels: The deflection due to live, snow, or wind shall not exceed L/180. The design analysis shall establish that the roof when deflected under dead plus live or snow loads will not result in a negative gradient. Maximum deflections shall be based on sheets continuous across two or more supports with sheets unfastened and free to deflect. Provide bracing of purlin compression flanges as required to resist applied loading.

b. Wall Panels - Maximum deflection of wall panels due to wind loads shall be as required by the IBC and UFC.

F101001 1.2 WALL AND ROOF MATERIALS

F101001 1.2.1 Aluminum/Zinc-Coated Steel Sheet

ASTM A792/ A792M, AZ 55.

F101001 1.2.2 Aluminum Sheet

Alloy 3004 Alclad conforming to ASTM B209.

F101001 1.3 FRAMING AND STRUCTURAL MEMBERS

F101001 1.3.1 Steel

ASTM A992 / A992M, ASTM A529/ A529M, ASTM A572/ A572M, or ASTM A588/ A588M.

F101001 1.3.2 Aluminum

ASTM B221 or ASTM C308.

F101001 1.3.3 Structural Tube

ASTM A500 or ASTM B221.

F101001 1.4 MISCELLANEOUS ITEMS

F101001 1.4.1 Fasteners

Fasteners shall be compatible with the materials they are fastening to, be gasketed when exposed to weather to prevent leaks, and shall provide both shear and tensile strengths not less than 750 pounds (3,336 N) per fastener. The main fastening system shall use concealed fasteners, however, when exposed fasteners are needed, color fasteners shall be color coated to match wall/roof panels.

F101001 1.4.2 Light Transmitting Roof Panels (Non-Insulated)

ASTM D3841, Type II, Grade 1

F101001 1.4.3 Insulation

Blanket-type fiberglass insulation with a factory applied facing on one side and having a permeance rating of 0.05 or less in accordance with ASTM E96.

a. Flame Spread Rating 75 or less, and a Smoke Developed Rating of 150 or less when tested in accordance with ASTM E84.

b. Insulation R-value in accordance with ASTM C236 as determined by energy use analysis or identified in the RFP.

F101001 1.5 FINISH

Factory Color Finish - Provide factory applied baked coatings to the exterior and interior of metal wall panels and metal accessories. Provide exterior finish top coat of 70 percent inorganic pigments with 0.8 mil dry film thickness (DFT). Provide exterior primer standard with panel manufacturer but not less than 0.8 mil DFT over the color topcoat and edge coating for projects within 300 feet (91 meters) of a water shoreline or industrial environments. Field apply 70 percent PVDF clear coat to unfinished panel edges or field cut panels. Interior finish exposed to sun or rain shall be the same coating and DFT as the exterior coating. Interior finish protected from sun or rain exposure shall receive 1.0 mil DFT coating of siliconized polyester (SMP) resin coating with organic or blended pigments and manufacturer’s standard primer.

F1020 SPECIAL CONSTRUCTION SYSTEMS

F102001 VAULTS

This paragraph is for prefabricated vaults. See PTS Section E10, *Equipment*, for vault doors and day gates.

-- End of Section --

SECTION F20

SELECTIVE BUILDING DEMOLITION
4/08

F20 GENERAL

F20 1.1 DESIGN GUIDANCE

Provide the design and installation in accordance with the following references. This Performance Technical Specification (PTS) adds clarification to the fundamental requirements contained in the following Government Standards. The general requirements of this PTS section are located in PTS Section Z10, *General Performance Technical Specification*.

Industry standards, codes, and government standards that are referenced in the section text that are **not** found in the Unified Master Reference List (UMRL) in the Construction Criteria Base (CCB) at the Whole Building Design Guide Website, are listed below for basic designation identification. Comply with the required and advisory portions of the current edition of the standard at the time of contract award.

F20 1.1.1 Industry Standards

Refer to UMRL for reference designation identification.

F20 1.1.2 Government Standards

UNIFIED FACILITIES CRITERIA (UFC)

UFC 3-800-10N, *Environmental Engineering for Facility Construction*

UNIFIED FACILITIES GUIDE SPECIFICATIONS (UFGS)

UFGS 01 57 19.00 20, *Temporary Environmental Controls*

UFGS 01 57 19.01 20, *Supplementary Temporary Environmental Controls*

UFGS 02 82 14.00 10, *Asbestos Hazard Control Activities*

UFGS 02 83 19.00 10, *Lead Based Paint Hazard Abatement, Target Housing and Child Occupied Facilities*

F20 1.2 QUALITY ASSURANCE

Materials and assemblies installed in the work shall be inspected and found to be in compliance with industry standards prior to acceptance of the work. Items found not to be in compliance shall be removed, or corrective measures taken, to assure compliance with the referenced standard. Disposal of materials shall be as specified and performed in a manner to protect workers and existing structures to remain.

F20 1.3 PERFORMANCE VERIFICATION AND ACCEPTANCE CRITERIA

Compliance with the requirements will be determined by a review of the design and construction submittals and by field inspection. See UFGS Section 01 33 10.05 20, *Design Submittal Procedures*, and UFGS Section 01 33 00.05 20, *Construction Submittal Procedures*, for additional requirements.

F20 1.4 DESIGN SUBMITTALS

Design Submittals shall be in accordance with Z10, *General Performance Technical Specifications*, UFGS section 01 33 10.05 20, *Design Submittal Procedures,* UFC 1-300-09N, *Design Procedures,* and UFC 3-800-10N, *Environmental Engineering for Facility Construction*.

F20 1.5 CONSTRUCTION SUBMITTALS

Submit construction submittals in accordance with PTS Section Z10, *General Performance Technical Specifications*. In addition to the Z10 requirements and if applicable to this project, the Designer of Record (DOR) shall obtain governing body approval for the construction submittals contained in the following UFGS sections as a minimum:

UFGS 01 57 19.05 20, *Temporary Environmental Controls for Design-Build*

UFGS 01 57 19.01 20, *Supplementary Temporary Environmental Controls*

UFGS 02 82 14.00 10, *Asbestos Hazard Control Activities*

UFGS 02 83 19.00 10, *Lead Based Paint Hazard Abatement, Target Housing and Child Occupied Facilities*

F2010 BUILDING ELEMENTS DEMOLITION

All demolition materials and appurtenances shall be properly disposed and in accordance with all applicable regulations. Maximize the use of deconstruction and recycling services. Before demolition can commence, any hazardous materials shall be abated in accordance with the requirements of the ESR and other parts of the RFP. The Contractor shall obtain approval from the Contracting Officer for the proposed demolition plan and work/outage schedule prior to demolition activities.

F2010 1.1 GENERAL DEMOLITION

The work includes demolition, salvage of identified items and materials and removal of resulting rubbish and debris. Rubbish and debris shall be removed from Government property daily, unless otherwise directed. Materials that cannot be removed daily shall be stored in areas specified in the approved Demolition Plan as described in UFGS 01 57 19.00 20.

F2010 1.2 UTILITIES

Remove existing utilities and terminate in a manner conforming to the nationally recognized code covering the specific utility. Disturbance to utilities can not cause a failure to utilities to remain operational, unless a planned outage is approved by the FEAD/ROICC and coordinated with on-site personnel.

F2010 1.3 DUST CONTROL

Perform dust control activities in accordance with approved Dirt and Dust Control Plan as described in UFGS 01 57 19.00 20.

F2010 1.4 TRAFFIC CONTROL

Where pedestrian, vehicle, aircraft safety is endangered, use traffic barricades.

F2010 1.5 WEATHER PROTECTION

For portions of the building to remain, protect building interior, materials, and equipment from weather at all times.

F2010 1.6 BURNING

Perform burning operations in accordance with the ESR.

F201001 SUBSTRUCTURE & SUPERSTRUCTURE

Perform substructure or superstructure demolition work in accordance with the ESR.

F201002 EXTERIOR CLOSURE

Perform exterior closure demolition work in accordance with the ESR.

For occupied buildings ensure openings to the exterior are secured by the end of the work shift.

F201003 ROOFING

Perform roofing demolition work in accordance with the ESR.

For removal and re-roofing projects, remove only as much roofing as can be re-covered by the end of the work shift.

F201004 INTERIOR CONSTRUCTION & FINISHES

Perform interior construction & finishes demolition in accordance with the ESR.

F201005 CONVEYING SYSTEMS

Perform conveying systems demolition in accordance with the ESR.

F201006 MECHANICAL SYSTEMS

Perform mechanical systems demolition in accordance with the ESR.

F201007 ELECTRICAL SYSTEMS

Perform electrical systems demolition in accordance with the ESR.

F201008 EQUIPMENT & FURNISHINGS

Perform special equipment and furnishing demolition in accordance with the ESR.

F201009 OTHER NON-HAZARDOUS SELECTIVE BUILDING DEMOLITION

Perform non-hazardous selective building demolition in accordance with the ESR.

F2020 HAZARDOUS COMPONENTS ABATEMENT

Prior to starting work, conduct any additional testing that may be needed to provide a final design and comply with all applicable Federal,

regional, state and local regulations. Refer to UFC 3-800-10N, *Environmental Engineering for Facility Construction*, for restrictions and for additional requirements and criteria.

F2020 1.1 PRIVATE QUALIFIED PERSON (PQP)

The PQP must perform independent inspections, testing and verification of the hazardous components work as indicated in the ESR and the approved work plans as described in UFGS 01 57 19.00 20. The PQP shall be appropriately licensed in the state in which the work will be performed.

F2020 1.2 FURNISHINGS

The government shall remove all uncontaminated furnishings and equipment from the work area prior to the start of the work.

F2020 1.3 ASBESTOS

Perform asbestos related work as indicated in the RFP, in accordance with the ESR, and the approved asbestos removal work plan as described in UFGS 01 57 19..

For asbestos work in DoD schools the Designer of Record shall edit UFGS 02 82 14.00 10, *Asbestos Hazard Control Activities,* as described in UFGS 01 57 19.00 20. The Designer of Record must be an EPA accredited Asbestos Project Designer. Perform asbestos related work in DoD schools in accordance with the approved edited UFGS 02 82 14.00 10.

F2020 1.4 LEAD BASED PAINT

Perform lead based paint related work as indicated in the RFP, in accordance with the ESR and the approved lead based paint removal work plan as described in UFGS 01 57 19..

All federal, state and local regulations regarding lead based paint within a child occupied facility must be followed. For lead based paint work performed in child occupied facilities the Designer of Record shall edit UFGS 02 83 19.00 10, *Lead Based Paint Hazard Abatement, Target Housing and Child Occupied Facilities,* as described in UFGS 01 57 19.00 20. The Designer of Record must be an EPA accredited Lead Project Designer. Perform lead based paint related work in child occupied facilities in accordance with the approved edited UFGS 02 82 14.00 10.

F2020 1.5 PAINT RELATED WORK

Perform paint related work as indicated in the RFP, in accordance with the ESR and the approved paint removal work plan as described in UFGS 01 57 19..

F2020 1.6 MERCURY & LLR COMPONENTS

Perform work as indicated in the RFP, in accordance with the ESR and the approved mercury & LLR components removal work plan as described in UFGS 01 57 19..

F2020 1.7 PCB’S

Perform PCB related work as indicated in the RFP, in accordance with the ESR and the approved PCB removal work plan as described in UFGS 01 57 19.. Notify the contracting officer immediately on discovery of any equipment

leaking PCB containing fluid. Take reasonable preventative measures to contain the leak and prevent movement of the PCB containing fluids.

F2020 1.8 ODS

Perform ODS related work as indicated in the RFP, in accordance with the ESR and the approved ODS removal work plan as described in UFGS 01 57 19..

F2020 1.9 ANIMAL DROPPINGS

Perform animal droppings related work as indicated in the RFP, in accordance with the ESR and the approved animal droppings removal work plan as described in UFGS 01 57 19..

F2020 1.10 MOLDS AND SPORES

Perform mold and spore related work as indicated in the RFP, in accordance with the ESR and the approved mold and spore work plan.

F2020 1.11 DISPOSAL

All waste materials shall become the property of the Contractor and shall be transported, disposed of and recycled in accordance with the approved disposal plan as described in UFGS 01 57 19.

F202001 SUBSTRUCTURE & SUPERSTRUCTURE

F202002 EXTERIOR CLOSURE

F202003 ROOFING

F202004 INTERIOR CONSTRUCTION & FINISHES

F202005 CONVEYING SYSTEMS

F202006 MECHANICAL SYSTEMS

F202007 ELECTRICAL SYSTEMS

F202008 EQUIPMENT & FURNISHINGS

F202009 OTHER HAZARDOUS SELECTIVE BUILDING DEMOLITION

Perform all other building components abatement work in accordance with the ESR.

-- End of Section --

SECTION G10

SITE PREPARATION
8/08

G10 GENERAL

G10 1.1 DESIGN GUIDANCE

Provide the design and installation in accordance with the following references. This Performance Technical Specification (PTS) adds clarification to the fundamental requirements contained in the following Government Standards. The general requirements of this PTS section are located in PTS Section Z10, *General Performance Technical Specification*.

G10 1.1.1 Industry Standards and Codes

Refer to UMRL for reference designation identification.

G10 1.1.2 Government Standards

CORPS OF ENGINEERS (COE)

COE EM 385-1-1, *Safety and Health Requirements Manual*

UNIFIED FACILITIES CRITERIA (UFC)

UFC 3-200-10N, *Civil Engineering*

UFC 3-220-01N, *Geotechnical Engineering*

UFC 3-800-10N, *Environmental Engineering for Facility Construction*

UNIFIED FACILITIES GUIDE SPECIFICATIONS (UFGS)

UFGS 31 23 00.00 20, *Excavation and Fill*

G10 1.2 PERFORMANCE VERIFICATION AND ACCEPTABLE TESTING

Compliance with the requirements will be determined by a review of the design and construction submittals and by field inspection. See Section 01 33 10.05 20, *Design Submittal Procedures*, and Section 01 33 00.05 20, *Construction Submittal Procedures*, for additional requirements.

Verification of satisfactory earthwork performance shall be via testing detailed in the paragraph, “Field Quality Control”, in UFGS Specification Section 31 23 00.00 20, *Excavation and Fill*.

G10 1.3 DESIGN SUBMITTALS

Design Submittals shall be in accordance with UFGS section 01 33 10.05 20, *Design Submittal Procedures,* UFC 1-300-09N, *Design Procedures,* UFC 3-200-10N, *Civil Engineering,* and UFC 3-220-01N.

In addition, UFGS sections listed below or in the body of the PTS text are to be used by the Designer of Record (DOR) as a part of the design

submittal. If the UFGS products or systems are applicable to the project, the DOR shall edit these referenced UFGS sections and submit them as a part of the design submittal specification. Edit the specification sections in accordance with the limitations stated in PTS section Z10, *General Performance Technical Specifications*.

UFGS 31 23 00.00 20 (02315N), *Excavation and Fill*

G10 1.4 CONSTRUCTION SUBMITTALS

Submit construction submittals in accordance with PTS Section Z10, *General Performance Technical Specifications*. In addition to the Z10 requirements, the Designer of Record (DOR) shall approve the following construction submittals as a minimum:

Submittals in UFGS 01 57 19.05 20 (01577N), Temporary Environmental Controls for Design-Build.

Submittals in UFGS Specification Section 31 23 00.00 20 (02315N), Excavation and Fill.

Demolition plan in accordance with Section 01 74 19, Construction and Demolition Waste Management.

G10 1.5 GEOTECHNICAL REPORT

G10 1.5.1 Subsurface Soils Information

Any provided subsurface soil information is included for the Contractor’s information only, and is not guaranteed to fully represent all subsurface conditions. The data included in this RFP are intended for proposal preparation and preliminary design only. The Contractor shall perform, at his expense, such subsurface exploration, investigation, testing, and analysis as his Designer of Record deems necessary for the design and construction of the site improvements.

G10 1.5.2 Contractor-provided Geotechnical Engineer

The Contractor-provided Geotechnical Engineer is required to be experienced with soil conditions in the region where the project site is located. The Geotechnical Engineer shall evaluate the RFP data, obtain and evaluate all additional data as required to support the design and construction, and prepare a Geotechnical Report.

All work by the Contractor-provided Geotechnical Engineer at the project location, if required, shall be coordinated with the Contracting Officer and shall not interfere with normal base operations. A minimum of two weeks prior to the Foundation Work Design submittal, provide the Contractor’s Geotechnical Report (an Adobe Acrobat PDF version on CD and two printed copies) for review and record keeping purposes. The report shall become the property of the Government. Provide the geotechnical reports generated during construction, such as pile driving results and analysis, to the Contracting Officer (an Adobe Acrobat PDF version and two printed copies) for record keeping purposes.

G10 1.5.3 Contractor-Provided Geotechnical Report

Submit a written Geotechnical report based upon Government-provided subsurface investigation data and all additional field and laboratory testing accomplished at the discretion of the Contractor's Geotechnical Engineer. The Geotechnical Report shall include the following:

a. The project site description, vicinity map and site map indicating the location of borings and any other sampling locations. Provide 24 hour groundwater observations for at least 20% of the borings, minimum one boring. Provide notes explaining any abbreviations or symbols used and describing any special site preparation requirements.

b. Results of all applicable field and laboratory testing, whether Government or Contractor-provided. Address existing subsurface conditions, selection and design of the foundation and floor slab, all underground construction including utility installation and all other site specific requirements (such as soil stabilization and slope stability).

c. Engineering analysis, discussion and recommendations Addressing:

1) Settlement analysis - Settlement shall be limited as required in EM 1110-1-1904 "Settlement Analysis".

2) Bearing Capacity analysis

3) Foundation selection (shallow, deep, special) and construction considerations; dimensions, and installation procedures.

4) Site preparation (earthwork procedures and equipment, compaction requirements, building slab preparation (as applicable), soil sensitivity to weather and equipment, groundwater influence on construction, mitigation of expansive soils or liquefaction potential, and dewatering requirements).

5) Sheeting and shoring considerations, as applicable.

6) Pavement design calculations with parameters defined, actual or assumed, and recommended thicknesses and materials.

7) Haul routes and stockpile locations for earthwork, as applicable.

8) Calculations to support conclusions and recommendations.

9) Recommendations shall be presented on a structure-by-structure basis.

The Geotechnical Report shall be signed by a registered Geotechnical Engineer.

The submitted report shall be accompanied by a cover letter identifying any report recommendations proposed to be adopted into the design which are interpreted by the Contractor as a changed condition to the Geotechnical or Pavement related requirements of the RFP.

G10 1.5.4 Geotechnical Site Data required in Design Drawings

The Contractor's final design drawings shall include the Government-provided subsurface data presented in the RFP, as well as any additional borings and laboratory test result data performed by the Contractor. The data provided shall include:

a. Logs of Borings and related summary of laboratory test results and groundwater observations. Provide 24 hour groundwater observations for at least 20% of the borings, minimum one boring. Provide notes explaining any abbreviations or symbols used and describing any special site preparation requirements.

b. The locations of all borings shall be indicated on the drawings. The applicable design drawings shall be revised to reference the Contractor's Geotechnical Report as being a basis for design.

G1010 SITE CLEARING

G1010 1.1 GENERAL

Clear and grub project site as required for project construction.

G1010 1.2 BURNING

Where burning is permitted, adhere to the applicable federal, state, and local regulations.

G101001 CLEARING

G101001 1.1 CLEARING

The Contractor shall clear all trees, shrubs, brush and vegetation necessary for construction of the project. Clearing includes the felling, trimming, and cutting of trees into sections.

G101001 1.2 PRESERVATION

Preserve and protect trees, shrubs and vegetation not directly impacted by the construction in accordance with Section 01 57 19.00 20, *Temporary Environmental Controls*.

G101002 TREE REMOVAL

Remove and dispose of trees to a depth of at least 18 inches (450 mm) below ground surface. Fill depressions with satisfactory material and compact. Mound fill 2 inches (50 mm) above adjacent surface to allow for settling when not part of a subbase.

G101003 STUMP REMOVAL

Remove stumps to a depth of at least 18 inches (450 mm) below ground surface and grind stumps 18 to 30 inches (450 to 750 mm) below ground surface. Fill depressions with satisfactory material and compact. Mound fill 2 inches (50 mm) above adjacent surface to allow for settling when not part of a subbase.

G101004 GRUBBING

Within the clearing limits, remove and dispose of all logs, shrubs, brush, matted roots, roots larger than 2 inches (50 mm) in diameter, and other debris to a depth of at least 18 inches (450 mm) below ground surface. Fill depressions made by grubbing with satisfactory material and compact to make the new surface conform to the adjacent surface of the ground.

G101005 SELECTIVE THINNING

G101005 1.1 TREE THINNING

Trim trees to remain of dead branches 1-1/2 inches (38 mm) or more in diameter. Neatly cut limbs and branches to be trimmed close to the bole of the tree or main branches.

G101006 DEBRIS DISPOSAL

Prevent spillage on pavements, streets, or adjacent areas. Dispose of all surplus and unsuitable material off of Government property.

G1020 SITE DEMOLITION & RELOCATIONS

G1020 1.1 GENERAL

Demolition work shall include the demolition, removal and legal disposal of existing construction debris as required to accommodate the new construction. The Contractor shall take care to prevent damages to existing utilities, construction and materials not scheduled for demolition, repair or replacement, and shall repair damages to the construction and materials to the satisfaction of the Contracting Officer and at no additional cost to the Government.

G1020 1.2 AUTHORIZATION

Do not begin demolition until the Demolition Plan has been approved by and authorization is received from the Contracting Officer.

G1020 1.3 TITLE TO MATERIALS

Whenever possible, all features demolished shall be salvaged or recycled in lieu of being disposed of as waste in a landfill. Existing features to be demolished which are not salvageable or reused, shall become the property of the Contractor and shall be removed from project site. The Government will not be responsible for the condition, loss of, or damage to, such property after contract award. Materials and equipment shall not be viewed by prospective purchasers or sold on the site.

G1020 1.4 REUSE OF MATERIALS AND EQUIPMENT

Remove and store materials and equipment to be reused or relocated to prevent damage, and reinstall as the work progresses.

G1020 1.5 SALVAGED MATERIALS AND EQUIPMENT

Salvage materials and equipment that are to be removed by the Contractor and that are to remain the property of the Government, and deliver to a storage site on the station in accordance with instructions of the Contracting Officer.

G102001 BUILDING MASS DEMOLITION

Refer to Section F20 for additional information.

G102002 ABOVEGROUND SITE DEMOLITION

G102002 1.1 DUST AND DEBRIS CONTROL

Prevent the spread of dust and debris to occupied portions of a building or on pavements and avoid the creation of a nuisance or hazard in the surrounding area. Do not use water for dust control if it results in hazardous or objectionable conditions such as, but not limited to, ice, flooding, or pollution. Sweep pavements as often as necessary to control the spread of debris that may result in foreign object damage potential to aircraft.

G102002 1.2 PROTECTION

G102002 1.2.1 Traffic Control

Where pedestrian and driver safety is endangered in the area of removal work, use traffic barricades with flashing lights. Provide temporary traffic control in accordance with UFC 3-200-10N, *Civil Engineering*.

G102002 1.2.2 Foreign Object Damage (FOD)

The Contractor shall take all measures necessary to prevent the deposition of FOD potential debris on or adjacent to operational airfield pavements. The Contractor shall install jersey barriers with lights and remove them as required. The Contractor shall immediately remove all such debris that appears on airfield pavements due to his construction activity.

G102002 1.2.3 Existing Work

Protect existing work that is to remain in place, be reused, or remain the property of the Government. At no additional expense to the government, repair all items that are damaged during performance of the work to their original condition, or replace with new. Do not overload pavements to remain.

G102002 1.2.4 Noise Pollution

Make the maximum use of low-noise emission products, as certified by the EPA.

G102002 1.3 PAVING AND SLABS

Remove concrete and asphaltic concrete paving and slabs as required for construction of project. Remove the existing aggregate base in areas to receive new pavement to the depth of the proposed pavement section below new finish grade. Remove the existing aggregate base in areas not to receive new pavement to a depth of 8 inches (200 mm) below existing adjacent grade and break remaining pavement (if any) to allow drainage. Provide neat sawcuts at limits of pavement removal; protect sawcuts so that new pavement will butt against the existing without feathering.

G102002 1.4 ABOVEGROUND STORAGE TANKS

Perform aboveground storage tank removal work as indicated in the RFP, in accordance with the ESR and the approved aboveground storage tank removal work plan as described in Section 01 57 19.00 20, *Temporary Environmental Controls*.

G102003 UNDERGROUND SITE DEMOLITION

G102003 1.1 UTILITY TERMINATION

Terminate utilities in accordance with state and local rules and regulations; the nationally recognized code; and the requirements of the utility provider covering the specific utility; UFC 3-200-10N, *Civil Engineering*; and approved by the Contracting Officer.

G102003 1.2 PROTECTION OF EXISTING UTILITIES

Protect existing utilities to remain. Where removal of existing utilities and pavement is required, provide approved barricades, temporary covering of exposed areas, and temporary services or connections. Repair damage to existing utilities to remain at no additional expense to the government.

G102003 1.3 UNDERGROUND STORAGE TANKS

Perform underground storage tank removal work as indicated in the RFP, in accordance with the ESR and the approved underground storage tank removal work plan as described in Section 01 57 19.00 20, *Temporary Environmental Controls*.

G102004 BUILDING RELOCATION

Refer to applicable portions of Section F20 for additional information.

G102005 UTILITY RELOCATION

Repair relocated items that are damaged or replace damaged items with new undamaged items as approved by the Contracting Officer and at no additional expense to the government.

G102006 FENCING RELOCATION

Remove and replace post foundations. Repair relocated items that are damaged or replace damaged items with new undamaged items as approved by the Contracting Officer and at no additional expense to the government.

Refer to Section G204001 for requirements for new fence systems, as applicable.

G102007 SITE CLEANUP

Remove rubbish and debris from the station daily; do not allow accumulations inside or outside the building(s) or on pavements. Store materials that cannot be removed daily in areas specified by the Contracting Officer.

G1030 SITE EARTHWORK

G1030 1.1 GENERAL

This section includes the design and construction requirements for earthwork and grading related to construction of the roadways, parking, paved areas and other related sitework. Refer to Section A10 for earthwork related to construction of structures, including building, footings, foundations, retaining walls, slabs, tanks, and utility appurtenances.

The Designer of Record shall utilize UFGS Specification Section 31 23 00.00 20, *Excavation and Fill*, for the project specification, and shall submit the edited specification section as a part of the design submittal for the project.

G103001 GRADING

G103001 1.1 ELEVATIONS

Establish finish floor elevations as required by UFC 3-200-10N, *Civil Engineering*.

G103001 1.2 SITE GRADING

The Contractor shall preserve natural topographic features to minimize the impact on the existing drainage patterns at and adjacent to the site. Provide site grading in accordance with the requirements of the UFC 3-200-10N, *Civil Engineering*.

G103001 1.3 FINISHED SURFACES

Finish grading shall provide drainage towards new and existing drainage features. Finish grading shall not result in low spots that hold water or that direct runoff towards new or existing facilities or site amenities. Finish grading shall be in accordance with the requirements of the UFC 3-200-10N, *Civil Engineering*.

G103002 COMMON EXCAVATION

The Contractor shall preserve natural topographic features to minimize cut and fill requirements. All unsuitable material and surplus excavation shall become the property of the Contractor and shall be disposed of as indicated in the Project Program.

G103003 ROCK EXCAVATION

If blasting is allowed, it shall be conducted in accordance with EM 385-1-1 and Federal, state, and local safety regulations. Blasting mats shall be provided, and non-electric blasting caps shall be used. Notify the Contracting Officer 24 hours prior to blasting.

Requests for additional compensation shall not be made by the Contractor for degree of hardness or difficulty encountered in removal of material. All unsuitable material and surplus excavation shall become the property of the Contractor and shall be disposed of as indicated in Project Program.

G103004 FILL & BORROW

G103004 1.1 SOURCES

Where sufficient topsoil and satisfactory materials are not available on the project site, provide suitable borrow materials.

G103004 1.2 UNSATISFACTORY SOIL MATERIALS

Remove unsatisfactory soil materials from the site in accordance with the Project Program and replace with satisfactory soil materials in accordance with UFGS Specification Section 31 23 00.00 20, *Excavation and Fill*.

G103004 1.3 TOPSOIL

Refer to Section G2050, “Landscaping”. Remove unsatisfactory, existing topsoil from the site in accordance with the Project Program.

G103005 COMPACTION

Provide compaction in accordance with UFGS Specification Section 31 23 00.00 20, *Excavation and Fill*, *and the recommendations of the Contractor’s Geotechnical Engineer*, whichever is greater.

G103006 SOIL STABILIZATION

Provide soil stabilization designed to function as required by site conditions in accordance with the State Highway specifications and standards in the state where the project is located. Apply and install geosynthetics in accordance with the manufacturer’s written instructions.

G103007 SLOPE STABILIZATION

Provide slope stabilization methods in accordance with the State Highway specifications and standards in the state where the project is located. Design and install manufactured products, gabions, geogrids, rock anchors in accordance with the manufacturer’s written instructions.

G103008 SOIL TREATMENT

G103008 1.1 TERMITE CONTROL

Refer to Section A1010 1.2, “Termite Control”.

G103008 1.2 RODENT AND VEGETATION CONTROL

Prevent and eliminate standing water.

G103009 SHORING

Provide sheeting, shoring, bracing, cribbing and underpinning in accordance with the *Army Corps of Engineer's Safety and Health Requirements Manual* (COE EM 385-1-1), UFC 3-220-01N, *Geotechnical Engineering*, UFC 3-300-10N, *Structural Engineering*, and all other applicable Federal, State and local codes and requirements

Provide protection of existing structures.

G103010 TEMPORARY DEWATERING

The design of the temporary dewatering system shall account for soil conditions, rainfall, fluctuations in the groundwater elevations and the potential settlement impact on adjacent facilities due to dewatering. Provide dewatering in accordance with UFGS Specification Section 31 23 00.00 20. While the excavation is open, the water level shall be maintained continuously, at least 1.0 foot (0.30 m) below the working level.

French drains, sumps, ditches or trenches will not be permitted within 3 feet (0.9 m) of the foundation of any structure without written approval of the NAVFAC Civil/Geotechnical Reviewer.

G103011 TEMPORARY EROSION & SEDIMENT CONTROL

G103011 1.1 TEMPORARY EROSION & SEDIMENT CONTROL

Develop and implement temporary erosion and sediment control measures and other Best Management Practices (BMPs) prior to or in conjunction with commencement of earthwork in accordance with the state Erosion and Sediment Control Laws and Regulations. Remove all non-permanent erosion control measures after vegetation is fully established.

G103011 1.2 MAINTENANCE

Maintain temporary erosion control measures in accordance with state Erosion and Sediment Control Laws and Regulations throughout the project until areas are fully stabilized.

G103090 OTHER SITE EARTHWORK

G103090 1.1 HISTORIC AND ARCHAEOLOGIC ARTIFACTS

Refer to Section 01 50 00.05 20, *Temporary Facilities and Controls for Design-Build*, in Part 2 of this RFP.

G103090 1.2 PIPELINE CASING UNDER RAILROADS OR PAVEMENTS

Where required by code or local practice provide casing for piping under railroads or pavements. The Contractor is responsible for obtaining permits from all government and nongovernment owners/agencies in designing and providing the work.

G103090 1.3 TOPSOIL AND SEED

Provide topsoil and seed according to UFGS Specification Section 31 23 00.00 20, *Excavation and Fill*, except when landscaping is required.

G1040 HAZARDOUS WASTE REMEDIATION

G1040 1.1 EXCAVATION

Perform excavation of contaminated soil and groundwater as indicated in the RFP, in accordance with the ESR and the approved contaminated soil and groundwater removal work plan as described in Section 01 57 19.00 20, *Temporary Environmental Controls*. Areas of contamination shall be excavated to the depth noted elsewhere in the RFP. Select methods and equipment to minimize disturbance to areas beyond the limits of the excavation area. Material that becomes contaminated as a result of the Contractor's operations shall be removed and disposed of at no additional cost to the Government. Where excavation extends into groundwater levels, dewatering methods shall be employed on a localized basis to facilitate excavation operations. Water generated by dewatering during excavation shall be collected and tested in accordance with the ESR and the approved work plan.

Water that contains contaminants above the levels indicated in the ESR shall be disposed of in accordance with the ESR and the approved work plan.

Non-contaminated water may be disposed of on-site.

G1040 1.2 STOCKPILED SOILS

Soils determined to be contaminated in accordance with the criteria in the ESR must be stockpiled in accordance with the contaminated soil and groundwater removal work plan as described in Section 01 57 19.00 20, *Temporary Environmental Controls*, and shall be disposed of in accordance with the requirements of the ESR.

Soils that are determined to contain contaminants below the criteria listed in the ESR may be used as clean fill.

G1040 1.3 CLEAN FILL

Soils that are determined as clean fill via testing shall be backfilled and compacted in accordance with the requirements listed in the ESR.

G1040 1.4 SPILLS

In the event of a spill or release of hazardous substances, pollutant, contaminant or oil, notify the Contracting Officer immediately. Containment actions shall be taken immediately to minimize the effect of any spill or leak. Clean up shall be performed at the Contractor’s expense in accordance with the ESR and the approved spill work plan as described in Section 01 57 19.00 20, *Temporary Environmental Controls*.

G1040 1.5 DISPOSAL

All waste materials shall become the property of the Contractor and shall be transported, disposed of in accordance with the criteria listed in the ESR and the approved disposal plan as described in Section 01 57 19.00 20, *Temporary Environmental Controls*.

-- End of Section --

SECTION G20

SITE IMPROVEMENTS
4/08

G20 GENERAL

G20 1.1 DESIGN GUIDANCE

Provide the design and installation in accordance with the following references. This Performance Technical Specification (PTS) adds clarification to the fundamental requirements contained in the following Government Standards. The general requirements of this PTS section are located in PTS Section Z10, *General Performance Technical Specification*.

G20 1.1.1 Industry Standards and Codes

AMERICAN SOD PRODUCERS ASSOCIATION (ASPA)

NATIONAL FEDERATION OF STATE HIGH SCHOOL ASSOCIATIONS (NF)

U.S CONSUMER PRODUCT SAFETY COMMISSION, PUBLICATION NO. 325

G20 1.1.2 Government Standards

U.S. GENERAL SERVICES ADMINISTRATION (GSA)

FS RR-F-191, *Fencing and Wire and Post Metal (and Gates, Chain-link Fence Fabric, and Accessories)*

CORPS OF ENGINEERS (COE)

TM 5-822-5, *Pavement Design for Roads, Streets, Walks, and Open Storage Areas*

NAVAL FACILITIES ENGINEERING COMMAND (NAVFACENGCOM)

Military Handbook, MIL-HDBK-1013/14, *Selection and Application of Vehicle Barriers*

UNIFIED FACILITIES CRITERIA (UFC)

UFC 1-300-09N, *Design Procedures*

UFC 3-200-10N, *Civil Engineering*

UFC 3-201-02, *Landscape Architecture*

UFC 3-210-04, *Children’s Outdoor Play Areas*

UFC 3-220-01N, *Geotechnical Engineering*

UFC 3-270-01, *O&M: Asphalt Maintenance and Repair*

UFC 3-270-02, *O&M: Asphalt Crack Repair*

UFC 3-270-03, *O&M: Concrete Crack and Partial Depth Spall Repair*

UFC 3-270-04, *O&M: Concrete Repair*

UFC 3-800-10N, *Environmental Engineering for Facility Construction*

UNITED FACLITIES GUIDE SPECIFICATIONS (UFGS)

32 11 26.16, *Bituminous Concrete Base Course*

32 11 36.13, *Lean Concrete Base Course*

32 11 33, *Cement Stabilized [Base] [Subbase] Course at Airfields and Roads*

32 11 30, *Lime Treated Subgrade [Lime Modified Soils]*

32 11 16.16, *[Base Course for Rigid] [and Subbase Course for Flexible] Paving*

32 11 24, *Graded Crushed Aggregate Base Course for Flexible Pavement*

32 11 16.13, *Sand-Clay [Base] [Subbase] Course*

32 12 17, *Hot Mix Bituminous Pavement*

32 13 13.03, *Airfields and Heavy-Duty Concrete Pavement Less Than 10,000 Cubic Yards*

32 13 13.06, *Portland Cement Concrete Pavement for Roads and Site Facilities*

G20 1.2 QUALITY ASSURANCE

G20 1.2.1 Qualifications of Tree Location Contractor

Contractor shall be a professional tree moving company holding landscape contractor’s license in the state where the work is to be performed and have a minimum ten years of tree relocation experience.

G20 1.2.2 Qualifications of New Landscape Contractor

Construction company shall hold a landscape contractor’s license in the state where the work is to be performed and have a minimum five years of landscape construction experience.

G20 1.3 PERFORMANCE VERIFICATION AND ACCEPTANCE TESTING

Compliance with the requirements will be determined by a review of the design and construction submittals and by field inspection. See Section 01 33 10.05 20, *Design Submittal Procedures*, and Section 01 33 00.05 20, *Construction Submittal Procedures*, for additional requirements.

Verification of satisfactory performance shall be via Performance Verification, as detailed in this section of the RFP. Verification of satisfactory performance shall also be via testing as detailed in the paragraph, Field Quality Control, in applicable UFGS Specification Sections utilized.

G20 1.3.1 Subgrade Preparation Performance Verification

Perform subgrade preparation in accordance with PTS Section G10. If required by the Designer of Record, perform proof rolling. Proof rolling shall be performed in the presence of the Contracting Officer.

Rutting or pumping of material shall be undercut as directed by the Contracting Officer and replaced with satisfactory soil materials as defined in Section G10, *Site Preparation*.

G20 1.3.2 Base Course Performance Verification

G20 1.3.2.1 Aggregate Base Course

a. Sampling: ASTM D 75.

b. Gradation: ASTM C 136.

c. Thickness: Confirm in-place compacted thickness. Acceptable tolerances are plus or minus 0.5 inches (13 mm). One test for every 500 square yards (418 square meters); minimum 2 tests.

d. Density: ASTM D 1556 or ASTM D 2922 and ASTM D 3017. One field test for every 1000 square yards (836 square meters); minimum 2 tests. ASTM D 1557, Method D; one laboratory test for the project.

e. Visual: Surface shall be smooth with no ruts.

G20 1.3.2.2 Other Types of Base Courses

For other types of base courses, provide field testing in accordance with the SHS.

G20 1.3.3 Bituminous Concrete Pavement Performance Verification

a. Visual: Finished surface shall be uniform in texture and appearance and free of cracks and creases.

b. Sampling: ASTM D 979.

c. Job Mix: Determine gradation and bitumen content. One sample for every 400 tons (362,500 kilograms); minimum 1 test.

d. Thickness: ASTM D 3549. Confirm in-place compacted thickness. Acceptable tolerances are plus or minus 0.5 inches (13 mm) for bituminous base course and plus or minus 0.25 inches (6 mm) for bituminous surface course. One test for every 500 square yards (418 square meters); minimum 2 tests.

e. Surface Smoothness: Test surface smoothness by using a 10 foot (3 meter) straightedge in transverse and longitudinal directions to pavement. Acceptable tolerances are plus or minus 0.25 inches (6 mm) for bituminous base and surface courses.

f. Density: Conduct field density of in-place compacted pavement in accordance with ASTM D 2950 and correlated with ASTM D 1188 or ASTM D 2726. One field test for every 1000 square yards (836 square meters); minimum 2 tests. One laboratory test for the project.

G20 1.3.4 Portland Cement Concrete Pavement Performance Verification

a. Visual: Finished surface shall be uniform in texture and appearance and free of cracks.

b. Sampling: ASTM C 31M (ASTM C 31).

c. Thickness: Acceptable tolerances are plus or minus 0.5 inches (13 mm). One test for every 500 square feet (418 square meters); minimum 2 tests.

d. Surface Smoothness: Test surface smoothness by using a 10 foot (3 meter) straightedge in transverse and longitudinal directions to pavement. The finished surfaces of the pavements shall have no abrupt change of 0.12 inch (3 mm) or more.

e. Strength: Samples for strength tests of each mix design of concrete placed each day shall be taken not less than once a day, nor less than once for each 100 cubic yards (120 cubic meters) of concrete, nor less than once for each 5000 square feet (500 square meters).

1) Compressive Strength: ASTM C 39. Make five test cylinders for each set of tests. Test two cylinders at 7 days, two cylinders at 28 days, and hold one cylinder in reserve. Each strength test result shall be the average of two cylinders from the same concrete sample tested at 28 days. If the average of any three consecutive strength test results is less than f'c or if any strength test result falls below f'c by more than 500 psi, take a minimum of three ASTM C 42/C 42M core samples from the in-place work represented by the low test cylinder results and test. Concrete represented by core test shall be considered structurally adequate if the average of three cores is equal to at least 85 percent of f'c and if no single core is less than 75 percent of f'c. Locations represented by erratic core strengths shall be retested.

2) Flexural Strength: ASTM C 78. Make four test specimens for each set of tests. Test two specimens at 28 days, and the other two at 90 days. Concrete strength will be considered satisfactory when the minimum of the 90-day test results equals or exceeds the specified 90-day flexural strength, and no individual strength test is less than the design strength. If the ratio of the 28-day strength test to the specified 90-day strength is less than 65 percent, make necessary adjustments for conformance.

f. Remove concrete not meeting strength criteria and provide new acceptable concrete at no expense to the government. Repair core holes with nonshrink grout. Match color and finish of adjacent concrete.

G20 1.3.5 Concrete Joint Performance Verification

Install a test section of 500 linear feet (150 m) at start of sealing operation for each type sealant to be used. Obtain approval of test section by Contracting Officer prior to installing additional joint seal. Joint sealer that fails to cure properly, or fails to bond to joint walls, or reverts to uncured state or fails in cohesion, or shows excessive air voids, blisters, or has surface defects, swells, or other deficiencies, or is not recessed within indicated tolerances shall be rejected. Remove rejected sealer and reclean and reseal joints.

G20 1.3.6 Topsoil Performance Verification

Prior to planting design, provide a commercial soil analysis. Amend planting areas based on the soil test’s interpretation, amendment type, and quantity recommendations (including soil nutrients and texture, with percentages shown). Additional topsoil shall be used only in areas where soil analysis shows that the existing soil is inadequate for growth of plant materials.

G20 1.3.7 Final Inspection for Planting and Irrigation

Final inspection shall be made upon written request from the Contractor at least 10 days prior to the last day of the planting and irrigation Establishment Period. The Landscape Contractor shall attend the inspection with the Contracting Officer and document the inspection. The Landscape Architect-of-Record shall also attend the inspection and provide the Contracting Officer with a letter certifying that the planting and irrigation is installed per the plans and irrigation coverage is correct and appropriate for optimum plant survival. At the end of the Establishment Period, remove all stakes and guy cables.

G20 1.3.8 Landscape and Irrigation Establishment Period and Guarantee

All transplanted trees, newly planted trees, shrubs, ground covers, turf, and irrigation systems shall be guaranteed for a period of one year after the Contracting Officer's final acceptance. This acceptance, and the submittal of irrigation as-builts and controller charts, shall begin the Establishment Period. All trees, shrubs, and ground covers that die or have 20 percent or more of their crowns that die during planting operations or the guarantee period shall be replaced with healthy plants of the same species or variety during the appropriate planting season. The Landscape Architect-of-Record shall, along with the Contracting Officer, attend, approve and document the start of the Establishment Period and document quarterly and final inspections. During this period, the Contractor shall perform tasks which shall include, but not be limited to: watering, mowing, overseeding, fertilizing, mulching, pruning, weeding, eradicating pests (rodents, rabbits, insects, mammals and fungus), restaking, adjusting guy wires, adjusting irrigation systems, and replenishing mulch to assure all plant material is in a healthy and thriving condition or the Contractor shall replace plant material at his own expense. Broadcast seeded or hydro-seeded areas that do not achieve the 95-percent coverage by the end of the Establishment Period shall be reseeded by the same method and be maintained an additional 120 days to ensure coverage requirements are met. Turf shall be maintained in a manner that promotes proper health, growth, rich natural green color, and a neat, uniform, manicured appearance, free of bare areas, ruts, holes, weeds, pests, dead vegetation, debris, and unwanted vegetation that present an unsightly appearance. Mow weekly during the growing season and remove excess clippings.

G20 1.4 DESIGN SUBMITTALS

Design Submittals shall be in accordance with UFGS section 01 33 10.05 20, *Design Submittal Procedures,* UFC 1-300-09N, *Design Procedures,* and UFC 3-200-10N, *Civil Engineering*.

In addition, UFGS sections listed below or in the body of the PTS text are to be used by the Designer of Record (DOR) as a part of the design submittal. If the UFGS products or systems are applicable to the project, the DOR shall edit these referenced UFGS sections and submit them as a part of the design submittal specification. Edit the specification sections in accordance with the limitations stated in PTS section Z10, *General Performance Technical Specifications*.

32 11 26.16, *Bituminous Concrete Base Course*

32 11 36.13, *Lean Concrete Base Course*

32 11 33, *Cement Stabilized [Base] [Subbase] Course at Airfields and Roads*

32 11 30, *Lime Treated Subgrade [Lime Modified Soils]*

32 11 16.16, *[Base Course for Rigid] [and Subbase Course for Flexible] Paving*

32 11 24, *Graded Crushed Aggregate Base Course for Flexible Pavement*

32 11 16.13, *Sand-Clay [Base] [Subbase] Course*

32 12 17, *Hot Mix Bituminous Pavement*

32 13 13.16, *Portland Cement Concrete Pavement for Roads and Site Facilities*

G20 1.5 CONSTRUCTION SUBMITTALS

Provide product data for all exterior furnishings.

Submit construction submittals in accordance with PTS Section Z10, *General Performance Technical Specifications*. In addition to the Z10 requirements, the Designer of Record (DOR) shall approve the following construction submittals as a minimum:

Provide product data for all exterior furnishings, field test reports. transporting plan, and irrigation plan.

G20 1.5.1 Transplanting Plan

A transplanting plan shall be submitted for all projects which include transplanting trees. The plan shall be submitted showing existing and proposed locations of transplanted trees. The plan shall delineate methods and times for root pruning, digging, balling, removing, storing, transporting, planting, watering, and maintenance to ensure survivability. The plan shall also include equipment, anti-desiccant, and pesticides to be used. A listing of the plant material to be transplanted shall be provided by common name and botanical name as listed under “Nomenclature” in ANSI Z60.1; classification; caliper; and height.

G20 1.5.2 As-Builts

Submit a complete set of irrigation as-builts to the Contracting Officer, to include the recording of measurements onto a record set of full-size project irrigation plans. Measurements shall locate water meters, pressure supply lines at 100 foot (30 m) intervals, backflow prevention devices, rain/freeze sensors, valves (including quick couplers and hose bibbs), controllers (and control wire, if routed separately from pressure supply line); all dimensioned from two permanent points of reference, such as building corners, sidewalks, and other permanent features.

G20 1.6 ANTITERRORISM (AT) STANDARDS

INCORPORATE THE MINIMUM AT STANDARDS INDICATED IN UFC 4-010-01*, DOD MINIMUM ANTITERRORISM STANDARD FOR BUILDINGS*.

G20 1.7 PROJECT LIMITATIONS

Prior to the start of design, the Contractor shall determine the exact limit-of-work line for the project periphery, considering items such as, but not limited to, utility work, landscape revegetation of disturbed areas, and laydown areas. The Designer of Record shall determine limit-of-work lines.

G2010 ROADWAYS

G2010 1.1 PAVEMENT DESIGN

Provide geometric and pavement design, including minimum pavement sections, in accordance with UFC 3-200-10N, *Civil Engineering*, and the State Department of Transportation. Provide pavement calculations in accordance with UFC 1-300-09N, *Design Procedures*. Provide any required additional pavement design to provide a complete and useable facility.

For pavements subject to aircraft traffic or aircraft ground support equipment traffic consult Government Civil Reviewer for design criteria and requirements. State Department of Transportation standards are not acceptable for airfield pavements.

G2010 1.2 PAVEMENT AESTHETICS

Provide surfaces consistent in color and finish.

G2010 1.3 LANDSCAPING

Designs for streets and roads shall include adequate space for trees and other landscape material.

G2010 1.4 TRAFFIC CONTROL DEVICES

New traffic control devices (i.e., signsand markings) shall be provided and installed in accordance with the United States Department of Transportation Federal Highway Administration's *Manual on Uniform Traffic Control Devices* and their standard, “Rigid Sign Supports”. New traffic control devices shall also be provided along/in the existing streets adjacent to the project site as necessary to provide complete traffic control to the new facilities.

G2010 1.5 EXISTING UTILITY STRUCTURES

Existing utility structures shall be adjusted to meet the new finished pavement grades as required.

G201001 BASES & SUBBASES

Prepare subgrade in accordance with Section G10, *Site Preparation*. Geotextiles may be used for separation or reinforcement in accordance with manufacturer’s instructions. Provide base course under paved areas in accordance with the State Highway specifications (SHS) in the state where the project is located.

Place base course in accordance with the SHS for that particular base course and in layers of equal thickness with no compacted layer more than 6 inches (150 mm) thick. Compact base course at optimum moisture content to 100 percent ASTM D 1557 maximum dry density.

Where SHS are not available or applicable, the Designer of Record shall utilize the applicable UFGS Specification Sections referenced under paragraph 1.1.2 entitled “Government Standards” for the project specification. Submit these specifications in edited form as a part of the design submittal for the project.

G201002 CURBS & GUTTERS

Provide concrete curbs and gutters in accordance with the SHS and standards or as specified in UFC 3-200-10N, *Civil Engineering*, whichever is more stringent. Where the SHS do not include concrete materials for curbs and gutters, provide concrete in accordance with the applicable standard mix of the SHS for a minimum compressive strength at 28 days of 3500 psi (25 MPa) concrete.

G201003 PAVED SURFACES

Where SHS are not available or applicable, the Designer of Record shall utilize the applicable UFGS Specification Sections referenced under paragraph 1.1.2 entitled “Government Standards” for the project specification. Submit these specifications in edited form as a part of the design submittal for the project.

G201003 1.1 PAVEMENT MIX

G201003 1.1.1 Bituminous Concrete Pavement

Provide bituminous concrete pavement in accordance with the applicable standard mix of the SHS based on the pavement design and vehicle loading indicated in this RFP.

G201003 1.1.1.1 Bituminous Concrete Placement

Bituminous concrete placement, including minimum temperature during placement, joints, and maximum lift thickness shall be in accordance with the SHS. Compact bituminous concrete in accordance with the SHS, modified to 96 percent of maximum laboratory density.

G201003 1.1.2 Portland Cement Concrete Pavement

If reinforced, the welded wire fabric shall conform to ASTM A 185. Bar reinforcement shall conform to ASTM A 615/A 615M, Grade 400 (Grade 60).

Provide concrete in accordance with the applicable standard mix of the SHS for the design strength plus any allowable deviations.

G201003 1.2 JOINTS FOR PORTLAND CEMENT CONCRETE PAVEMENT

Joints shall be in accordance with SHS and the applicable portions of TM 5-822-5, *Pavement Design for Roads, Streets, Walks, and Open Storage Areas*. Joints shall be installed in a manner and at such time to prevent random or uncontrolled cracking. Joints shall form a regular rectangular pattern. Wherever curved pavement edges occur, make joints to intersect tangents to curve at right angles.

G201003 1.2.1 Expansion Joints

Provide thickened edge expansion joints at the intersection of two rigid pavements. Use preformed joint filler, ASTM D 1751. Filler must be compatible with joint sealer material. Preformed joint filler shall be securely held in position during concreting operations.

G201003 1.2.2 Isolation Joints

Provide thickened edge isolation joints by placing a 1/2-inch (12 mm) preformed joint filler (ASTM D 1751) around each structure that extends into or through the pavement before concrete is placed at that location.

G201003 1.2.3 Contraction Joints

Joint lines shall be sawed within specified tolerance, straight, and extend for width of transverse joint, and for entire length of longitudinal joint.

G201003 1.2.4 Construction Joints

If an emergency stop occurs remove the concrete back to location of transverse joint and install a construction joint.

G201003 1.2.5 Joint Sealants

ASTM D 5893; Provide single component cold-applied silicone. Silicone sealant shall be self-leveling and non-acid curing.

G201003 1.2.6 Preformed Compression Seals

Use performed compression seals in areas where silicone joint sealant does not perform, such as areas subject to water inundation, blasts, or constant/repeated fuel spillage.

ASTM D 2628. ASTM D 2835, for lubricant.

G201003 1.3 PRIME COAT

Use prime coat in accordance with the SHS. Prime coat shall be emulsified asphalt materials.

G201003 1.4 TACK COAT

Tack coat is required for bituminous pavement overlays and on vertical cut faces of pavement patches. Tack coat shall be in accordance with the SHS.

G201003 1.5 PAVEMENT PATCHES

Provide pavement patches for existing pavements where required for installation of utility trenches. Sawcut 12 inches beyond edge of trench. Thicknesses of pavement materials shall be equal to or greater than the existing pavement section.

For spalls or repairs of existing concrete pavement, perform repairs in conformance with UFC 3-270-03, *O&M: Concrete Crack and Partial Depth Spall Repair*, and UFC 3-270-04, *O&M: Concrete Repair*. Spall repair materials shall be either Rapid Setting Cementitious Concrete (RSCC), epoxy concrete, or polymer-modified Portland Cement (non-sag mortar) products specially formulated for spall repairs, with a proven record (in service at least three years) of satisfactory use under loading and environmental conditions similar to those at the location of intended use. A manufacturer’s data sheet and certificate supporting the satisfactory use shall be provided to the Contracting Officer with the design. A product manufacturer’s representative shall be present during the initial two days of product application to verify that manufacturer’s instructions for use are adhered to. The Contracting Officer shall be given 7 days notice prior to the initial application in order to be present.

G201004 MARKING & SIGNAGE

G201004 1.1 MARKING

Pavement markings shall be in accordance with the SHS. Materials shall be designed for life expectancy of at least 3 years under an average daily traffic count per lane of approximately 9000 vehicles. Water based paints

shall have durability rating of at least 4 when determined in the wheel path area.

Provide a half-rate initial marking application on bituminous pavements. Provide the remaining application at the end of the normal curing period.

G201004 1.2 SIGNAGE

Provide signage in accordance with the MUTCD.

G201005 GUARDRAILS & BARRIERS

G201005 1.1 GUARDRAILS

Provide guard (guide) rails in accordance with the SHS. Where the SHS do not include materials for guardrails, provide guardrails in accordance with the applicable portions of the *AASHTO Roadside Design Guide*.

G201005 1.2 BOLLARDS

Bollards shall be 4” diameter minimum steel pipe filled with concrete and embedded in a portland cement concrete foundation. Bollards associated with passive barrier systems are specified in Section G204004, “Security Structures”.

G201006 RESURFACING

Adjust rims of existing utility structures to match proposed grades after resurfacing.

G201006 1.1 SLURRY SEAL

ASTM D 3910 and in accordance with the SHS.

G201006 1.2 BITUMINOUS CONCRETE OVERLAY

Remove old pavement by cold milling to depths required to provide new surface and leave underlying materials intact. Clean the pavement of excessive dirt, clay or other foreign matter with power brooms and hand brooms immediately prior to the milling operation.

Repair or replace damaged utility structures, valve boxes, or pavement that is torn, cracked, gouged, rutted, broken or undercut at no addition expense to the government.

Provide bituminous concrete overlay produced from hot or cold recycling of the milled material or from virgin materials in accordance with the applicable provisions of UFC 3-200-10N, *Civil Engineering*, and the standard mix of the SHS based on the pavement design and vehicle loading as indicated in this RFP.

G201006 1.3 CRACK SEALING

Fiber reinforced crack sealer shall be used for sealing cracks in asphalt pavement after milling and prior to resurfacing. Crack sealing shall conform to the following requirements in UFC 3-270-01, *O&M: Asphalt Maintenance and Repair*, and UFC 3-270-02, *O&M: Asphalt Crack Repair*.

G2020 PARKING LOTS

G202001 BASES & SUBBASES

Refer to Section G201001.

G202002 CURBS & GUTTERS

Refer to Section G201002.

G202003 PAVED SURFACES

Refer to Section G201003.

G202004 MARKING & SIGNAGE

Refer to Section G201004. Provide water-based paints only.

Mark neatly to denote traffic lanes and parking spaces; mark in accordance with the requirements of UFC 3-200-10N, *Civil Engineering*.

G202005 GUARDRAILS & BARRIERS

Refer to Section G201005.

G202005 1.1 WHEELSTOPS

Provide precast concrete wheelstops.

G202006 RESURFACING

Refer to Section G201006.

G2030 PEDESTRIAN PAVING

Locate new sidewalks such that they maintain continuity of pedestrian traffic to and from the existing sidewalks adjacent to the site(s).

G203001 BASES & SUBBASES

Provide as required by local standards or geotechnical report; refer to Section G201001.

G203003 PAVED SURFACES

G203003 1.1 SIDEWALKS

Sidewalks shall be portland cement concrete pavement, 4 inches (100 mm) thick minimum. Provide concrete in accordance with the applicable standard mix of the SHS for a minimum compressive strength at 28 days of 3500 psi (25 MPa) concrete. Sidewalks shall be at least 5 feet (1.5 meters) wide, except that sidewalks connecting entry points of housing units to the housing unit’s parking shall be at least 36 inches (900 mm) wide. Use the maximum percentage of fly ash allowed in the applicable standard mix of the SHS. In housing areas, offset sidewalks paralleling streets to maintain a minimum grassed separation of 5 feet (1.5 meters) from the back face of the curb to the closest edge of the sidewalk.

Provide a broomed finish. Unless indicated otherwise, provide a transverse slope of 1/48. Limit variation in cross section to 0.25 inch in 5 feet (6 mm in 1.50 m).

G203003 1.1.1 Joints

Provide contraction joints spaced at intervals equivalent to the width of the sidewalk. Provide 0.5 inch (13 mm) thick transverse expansion joints at changes in direction where sidewalk abuts curb, steps, rigid pavement, or other similar structures; space expansion joints every 50 feet (15 m) maximum. Provide isolation joints by placing a 1/2-inch (12 mm) preformed expansion joint filler around each structure that extends into or through the sidewalk before concrete is placed at that location.

G203003 1.2 CONCRETE PAVERS

G203003 1.3 HANDICAPPED RAMPS

Provide handicapped ramps of portland cement concrete pavement with a minimum compressive strength at 28 days of 3500 psi (25 MPa) and an exposed aggregate finish, truncated domes, or as required by the SHS at roadway intersections.

G203004 GUARDRAILS & BARRIERS

Refer to Section G201005.

G2040 SITE DEVELOPMENT

G204001 FENCING & GATES

G204001 1.1 CHAIN LINK FENCE

Aluminum fabric, posts or accessories shall not be used.

Chain link fence fabric shall be at least 9 gauge (3 mm) steel wire mesh material (before any coating) with mesh openings not larger than 2 inches (51 mm). Install fence in accordance with ASTM F 567 and the manufacturer’s written installation instructions.

G204001 1.1.1 Tensions Wires and Top Rails

Provide rails in accordance with FS RR-F-191/3, Class 1, steel pipe, Grade A.

G204001 1.1.2 Gates

Provide gates in accordance with FS RR-F-191/2 with posts and fabric as specified for fence.

G204001 1.1.3 Posts and Braces

Provide posts and braces in accordance with FS RR-F-191/3, Class 1, steel pipe, Grade A. Each gate, terminal and end post will be braced with truss rods.

G204001 1.1.4 Fencing Accessories

Provide fencing accessories in accordance with FS RR-F-191/4. If PVC coating is required, provide accessories with PVC color coating similar to that specified for chain-link fabric or framework.

G204001 1.2 ORNAMENTAL FENCE

G204001 1.3 SECURITY FENCE

Provide security fencing systems in accordance with UFC 3-200-10N, *Civil Engineering*, and this RFP.

G204001 1.3.1 Chain Link Security Fence

Provide chain link fence in accordance with paragraph G204001 – 1.1, excepted as noted otherwise. Ensure that the fabric has twisted and barbed selvage at the top and bottom. Do not provide top rails. All posts and structural supports shall be located on the inner side of the fencing. Outriggers shall be installed facing outward except when the fence must be mounted directly on the property line.

G204001 1.3.2 Signage

Provide signage at a minimum of 200 foot (61 m) intervals along the entire perimeter.

G204001 1.3.3 Drainage Culverts and Utility Openings

Provide protective measures to prevent access through culverts, storm drains, sewers, air intakes, exhaust tunnels and utility openings or across drainage ditches or swales.

G204001 1.4 OPENINGS IN PERIMETER AND SECURITY FENCING

Openings in perimeter fencing and security fencing shall not be covered, blocked or laced with material which would prevent a clear view of personnel, vehicles or material in the outer or inner vicinity of the fenceline.

G204001 1.5 FENCE GROUNDING

Ground fencing on either side of every gate and at other locations when the fencing is near and parallel to high tension power lines. Grounding shall also be at intervals of 1000 feet (305 meters) to 1500 feet (457 meters) when the fencing runs through isolated areas and at lesser distances depending on the proximity of the fencing to public roads, highways and buildings where the fencing is around or within any explosive storage, production, operating or handling areas.

G204001 1.6 ENCLOSURES FOR UTILITY EQUIPMENT

Where fencing is used to provide an enclosure for utility equipment, ensure a minimum clearance is provided no less than 3 feet (900 mm) around the equipment to permit maintenance access and ventilation. Provide stone, gravel or concrete paving within the enclosure.

G204002 RETAINING WALLS AND FREESTANDING WALLS

Provide retaining walls to permanently resist soil pressures as well as live loads. Provide wall drainage to minimize lateral loading and protect wall materials against degradation.

G204003 EXTERIOR FURNISHINGS

Refer to ESR G20 and other portions of the RFP for exterior furnishings required on this project. All site furnishings shall be permanently attached to concrete pads. Site furnishings shall conform to the Base Exterior Architecture Plan (BEAP) and or Installation Appearance Plan for

each Activity. If no product guidance is given, coordinate material, finish and color with architecture (fiberglass and aluminum are not acceptable) and provide to the greatest extent possible, materials with industrial recycled content, preferably from regionally local manufacturers. At a minimum, provide a trash and ash receptacle at the designated smoking area.

G204003 1.1 PICNIC AND PASSIVE RECREATION AREAS

Picnic areas shall include tables, with attached benches, on concrete bases sloped to drain and permanent barbecue grill(s). Additionally, separate receptacles shall be provided for trash, recycling and barbecue ashes. All site furnishings shall be permanently attached to concrete paving which shall extend a minimum of 12 inches (300 mm) past the furnishing, with the exception of picnic tables and benches, which shall extend 2 feet (600mm) minimum on all sides. The elevation of the finished concrete shall be plus 1 inch (25 mm) above adjacent grade.

G204003 1.2 TRASH RECEPTACLES

Trash receptacles, with drain hole, shall have stationary or self-closing lids with anchor chains secured to the receptacle to protect the contents from weather. Receptacles shall be designed to hold heavy-duty plastic or galvanized steel liners of the same manufacturer. Consideration shall be given to potential weight of full containers when deciding on ‘top loading’ or ‘side loading’ receptacles. Trash receptacles shall include a concrete pad 12 inches (300 mm) larger on all sides than the size of the trash receptacles.

G204003 1.3 BENCH

Minimum 6 feet (1.8 meter) length to match trash and recycling receptacle material & color, installed a minimum of 18 inches (450 mm) above finish grade, permanently installed with anchor bolts or in-ground.

G204003 1.4 RECYCLING RECEPTACLES

Single-piece with separate slots for cans, bottles, newspaper. Height, material, and style shall match trash receptacle.

G204003 1.5 BARBEQUE

Minimum 12 inches (300 mm) x 18 inches (450 mm) with heavy-duty grill and hinged stainless steel lid, factory primed and painted with rust-resistant paint. Install so coal height is a minimum of 36 inches (0.91 meter) above finish grade.

G204003 1.6 HOT ASH RECEPTACLE

Minimum 28 square inches (181 square centimeters) x 42 inches (1.1 meter) high pre-cast reinforced concrete with drain hole with steel ash grate and cast in “Hot Coals Only” logos on each side with white letters on a red background.

G204004 SECURITY STRUCTURES

Where identified for project elsewhere in this RFP, provide active and passive vehicle barriers to effectively stop or detect penetration by explosive-laden vehicles through the perimeter of a protected area in accordance with MIL-HDBK-1013/14, *Selection and Application of Vehicle Barriers*.

G204005 SIGNAGE

Provide facility signage as required by local code, the Installation and Appearance Guide, the Base Exterior Architectural Plan (BEAP) and this RFP.

Size messages and graphics on signs according to the functional viewing distance. Typically, at least 1 inch (25 mm) of letter height per 25 feet (7.62 meters) of viewing distance is required for readability.

Refer to Section G201004, “Marking & Signage” for traffic signage.

G204006 PLAYING FIELDS

G204006 1.1 PLAYGROUNDS

Design playgrounds and provide surfacing and equipment in accordance with this RFP and U.S. Consumer Products Safety Commission Publication 325 and ASTM F 1487. Tot-Lots and Play-Lots shall be bordered with reinforced concrete curbing to a depth appropriate to the type safety surfacing utilized. Provisions for shade and wind protection shall be made where these elements may significantly limit the use of the facilities. Tot-lots and play-lots shall have separated areas with appropriately sized equipment and materials to serve their developmental levels. The areas shall be separated by a buffer zone, which can be an area of shrubs, hardscape or benches. Tot-lots and play-lots shall have signage to give guidance to adults as to the age appropriateness of the equipment.

G204006 1.1.1 Tot Lots

Design each “tot lot” to accommodate children from ages 2 through 5 to provide a variety of play activities and motor skill development opportunities which may include, as a minimum:

Multi-activity structures shall have a minimum of two platforms and two slides, one wheel chair accessible, swing set for young children, paired spring mounted ‘riders’ or other similar types of apparatus. At least two benches, with backs, on concrete bases, shall be located for convenience to, and observation of, the tot-lot.

G204006 1.1.2 Play Lots

Design each “play lot” to accommodate children from ages 5 to 12 which provide a wider range of activities and opportunities for greater motor skills development and improvement. These may include, as a minimum:

Multi-activity structure shall have a minimum of three platforms and two slides, one wheel chair accessible. A swing set, or other similar types of apparatus. At least two benches, with backs, on concrete bases, shall be located for convenience to, and observation of, the play-lot.

G204006 1.1.3 Equipment

Tot lot and play lot equipment shall be factory finished institutional quality, in compliance with ASTM F1487, the United States Consumer Products Safety Commission’s *Guidelines for Public Playgrounds*, UFC 3-210-04, *Design: Children’s Outdoor Play Areas*, and the UFC 3-200-10N, *Civil Engineering*. Use only equipment that has been approved by IPEMA and installed by a NPCA contractor.

Tot lot and play lot equipment shall be sited to provide use and no encroachment zones in accordance with ASTM F1487. A use zone is a clear,

unobstructed area under and around play equipment where a child would be expected to land when jumping or falling from a piece of play equipment. Requirements for use zones vary for the age group and for different pieces of equipment. All use zones for play equipment shall be shown on the site plan to ensure there is no conflict between play activities on the ground and swinging or jumping from the equipment. The No-encroachment zone is an additional area beyond the use zone where children using the equipment can be expected to move about and should have no encroaching obstacles. This area will vary according to the types of adjacent equipment, and their orientation to one another.

G204006 1.1.4 CCA-Treated Lumber

CCA-treated lumber shall not be used in recreational facilities for children.

G204006 1.1.5 Playground Safety Surface

A playground safety surface, in accordance with ASTM F355 and ASTM F1292, shall be provided throughout all use zones and under all play equipment in tot lots and play lots. Natural wood products are not allowed for surfacing. Loose fill surfacing shall be a minimum of 4 inches (100 mm) below the top of edging. Local climate, soil conditions, location and size of area, type of activity, age of users, and intensity of use shall be considered when choosing surfacing material. Provide soil separator fabric between playground loose-fill material and subgrade soil. Provide 4 inch perforated pipe around perimeter of playground and slope to drain. Drain to sump a minimum of 20 feet out from the playground curbing or to storm drain.

G204006 1.2 PLAYING FIELDS

Provide playing surfaces in accordance with this RFP.

G204090 OTHER SITE IMPROVEMENTS

Other site improvements shall conform to the BEAP and to the requirements of UFC 4-010-01.

G204090 1.1 DUMPSTER PADS AND ENCLOSURES

Dumpster pads shall be composed of 8 inch (200 mm) thick non-reinforced portland cement concrete pavement sized larger than what is required to accommodate the specific dumpsters to be used at the site. Make the concrete pad large enough to accommodate the front wheels of the carrying truck.

The dumpster enclosure’s materials and style shall complement the adjacent buildings and facilities. Walls should be at least 6 feet (1.83 meters) tall. Where possible, orient the openings of enclosures away from building entrances and main streets.

G2050 LANDSCAPING

G2050 1.1 DESIGN

The design of landscaped areas shall be in accordance with Presidential Executive Order 13148 of April 2000, with a goal to reduce fertilizers, pesticides, and water use. The intent is to achieve a base-wide ratio of 20 percent maximum non-native plants and 80 percent minimum locally or regionally native plants. Do not use plants deemed invasive by the

project state or region's Exotic Pest Plant Council, State Department of Agriculture or local chapter of the American Society of Landscape Architects as a threat to ecosystems or agriculture. All non-paved site areas inside the project limits or outside the project limits disturbed by construction operations, after meeting plant quantity requirements, shall be covered with plant material or inorganic mulch. Stabilized soil or organic mulch is not acceptable as a ground cover. For NAVFAC Southwest projects, eliminate or minimize the use of turf, except when needed for active or passive recreation. Provide landscape architectural work in accordance with UFC 3-201-02, *Landscape Architecture*. All projects with planting and or irrigation areas shall utilize the design services of a Landscape Architect licensed in the state of the project. The Landscape Architect of Record shall visit the site at least once prior to design, twice during construction, and quarterly during the Establishment Period, including the Establishment Period start and completion.

G205001 FINE GRADING AND SOIL PREPARATION

See Section G10, *Site Preparation*.

G205002 EROSION CONTROL MEASURES

See Section G10, *Site Preparation*.

G205003 TOP SOIL AND PLANTING BEDS

See paragraph titled, G205005 PLANTINGS.

G205004 SEEDING, SPRIGGING, AND SODDING

Areas that are to be seeded that are larger than 1,000 square feet (92.90 square meters) shall be hydroseeded. Hydroseed mix composition shall be appropriate for surrounding land use and compatible and consistent with local application rates, seed availability and established practice in the project area. If project dates are unknown, specify required planting dates or alternative species for different seasons. Apply seed at a time best suited for germination of the selected species. Seeded areas shall achieve a 95-percent coverage of the selected species and be weed free at the end of the Establishment Period.

G205005 PLANTINGS

G205005 1.1 EXISTING PLANT MATERIAL TO REMAIN OR BE TRANSPLANTED

Preserve existing trees to the greatest extent possible. The Contractor shall tag trees to be saved with plastic or vinyl tape tied to the tree caliper. The Contractor shall protect existing trees by fencing planting areas to remain from compaction and any other damage with a barrier of metal poles a maximum 8 feet (2.4 meter) on center with plastic netting to a minimum of 10 feet (3.0 meter) radius from outside of the tree's trunk. Where tree drip lines are greater than 10 feet (3.0 meter) from the tree's trunk, locate barrier fencing at the drip line of the tree. The Contractor shall not allow debris from tree or stump removal operations to fall on or otherwise damage plants that are not scheduled for removal. Plastic tape and barrier fencing shall not be removed until planting operations are ready to begin and or instructed by the Contracting Officer. Existing trees to remain or to be transplanted that are unhealthy, that die, or have 20 percent or more of their crowns that die during the establishment period shall be replaced with healthy plants of the same species or variety during the appropriate planting season. During the landscape establishment period, trees, turf, shrubs, and ground cover that are damaged or destroyed during construction operations shall be replaced by the Contractor at no

additional cost to the Government. The Contractor, at the direction of the Contracting Officer, shall remove the existing tree and stump and replace it with trees of the same genus and species equal to the total caliper of the existing tree. Minimum caliper of replacement trees shall be 4 inch (100 mm). Replace shrubs with 5 gallon (18.9 liter) size container, ground cover with flat containers planted at 8 inches (200 mm) on center, and turf with sod, all of the same genus and species.

G205005 1.2 UTILITIES

Trees shall not be placed within 10 feet (3 meter) of any above or below-grade utility line or structure. Within roadway sightlines, mature shrubs shall not be greater than 3 feet (1 m) in height and trees shall be limbed up a minimum of 6 feet (2 m) so their mature growth will not obstruct views from vehicle intersections or points of vehicle ingress or egress.

G205005 1.3 RECYCLING

Green waste: Contact the Public Works Department for potential green waste collection and hauling by the Government. Green waste not collected by the Government shall be separated from construction debris and delivered to the base’s or local landfill’s green waste recycling area. Quantify and report diverted waste to the Contracting Officer.

G205005 1.4 PLANTING

G205005 1.4.1 Plant Quantities

Provide for building periphery, parking lot and perimeter site planting, not covered by buildings or paving, with a minimum of one (1) tree per 900 square feet (83.6 square meter) of landscape area. Provide a minimum tree size of 24 inch (600 mm) box/2 inch (50 mm) caliper, or if within an anti-terrorism zone provide a minimum size of 36 inch (910 mm) box/3 inch (76 mm) caliper. For trees within concrete or other non-permeable paved areas, allow a minimum non-paved planting area of 4 feet by 8 feet (1.2 m by 2.4 m) per tree.

For NAVFAC Southwest only: A minimum of forty percent (40%) of the landscaped areas shall be planted with shrubs and groundcover so that at 50 percent (50%) plant maturity, they will form mass plantings. Utilize a minimum ratio of 60 percent (60%) 5 gallon (18.9 liter) shrubs or groundcover and 40 percent (40%) 1 gallon (3.79 liter) shrubs or groundcover. The remaining sixty percent (60%) of the landscape area may be inorganic mulch, decomposed granite, planted or a combination. For inorganic mulch, provide 3 inch (76 mm) depth of 3/4-inch (19 mm) and smaller rock, and for larger than 3/4-inch (19 mm) size, assure complete ground surface coverage. For decomposed granite, provide 2 inch (50 mm) minimum depth. Do not use decomposed granite as a ground cover on slopes 5:1 and greater.

For all other NAVFAC Regions: Plant the majority of shrubs at major entrances to buildings and at other important planting zones that are specific to each site. The overall design intent should be to plant mostly trees and turf, with shrubs and ground covers used sparingly, to reduce maintenance costs while still providing for functional planting requirements (e.g., soil stabilization, energy conservation, force protection, and aesthetics). Provide a minimum size 3 gallon (11.4 liter) container for shrubs and 1 gallon (3.79 liter) container for ground covers.

G205005 1.4.2 Plant Quality

All plants shall comply with ANSI Z60.1 and ANSI Z133.1, current editions. All plants shall be in a healthy, disease and pest free condition. All seed, sod, and sprigs shall be State Certified.

G205005 1.4.3 Plant Selection

The reviewing Government Landscape Architect shall have final approval authority on all selected plant material. Species deemed unsuitable for planting by the Government Landscape Architect will not be allowed.

G205005 1.4.4 Plant Installation

Planting operations, including but not limited to planting soil mixes and fertilization, shall comply with local established practices and agricultural extension service recommendations. Stake or guy new or transplanted trees with three stakes {2 – 2 ½ inch(63.5 mm) x 8 feet (2.4 m) hardwood}, or three guy cables {five-strand, 3/16 inch (5 mm) diameter galvanized steel cable}.

G205005 1.4.5 Edging Materials and Mulching Materials

Provide 3/16 inch (5 mm) thick by 4 inch (100 mm) deep galvanized steel or 6 inch (150 mm) by 6 inch (150 mm) concrete edging dividing all turf and shrub areas and dividing all planted and non-planted inorganic mulch areas. Plastic edging is not allowed. Mulch planted areas not mulched with inorganic mulch or stabilized decomposed granite with a 3-inch (75 mm) depth of organic shredded hardwood mulch during the Establishment Period while plants are growing to form a mass.

G205005 1.4.6 Fertilizer

Fertilize all transplanted trees, new trees, shrubs, ground covers, turf, perennials and ornamental grasses as recommended by local agricultural extension services.

G205005 1.4.7 Weed Fabric and Erosion Control Fabric

Provide a weed barrier fabric of sheet polypropylene or polyester fabric specifically designed for weed control purposes beneath all planted or mulched non-planted areas. Fabric shall be treated for protection against deterioration due to ultraviolet radiation. Fabric shall be a minimum 99 percent opaque to prevent photosynthesis and seed germination from occurring, yet allowing air, water and nutrients to pass through to the roots. Minimum weight shall be 5 ounces per square yard (0.11 kg per square meter) with a minimum thickness of 20 mils (0.50 mm) with a 20 year minimum guarantee. Provide a biodegradable product designed specifically for erosion control on all sloped areas 3:1 and greater in slope.

G205005 1.4.8 Drainage

Provide for proper grading and drainage of turf and planting areas. Provide sub-surface drainage where soil or other conditions do not allow surface drainage. Do not drain roof gutters into planter areas.

G205006 IRRIGATION SYSTEMS

G205006 1.1 IRRIGATION

Where irrigation system is required per other parts of this RFP, provide a permanent, below-grade system. Provide 100 percent sprinkler head to head

coverage. Provide pop-up heads in turf and landscape zones when adjacent to walks, roads, parking lots, or in sparsely planted landscape areas where pedestrians may circulate. Provide pop-up heads project-wide on high-traffic sites such as, but not limited to, dining, housing, entertainment, daycare, education and recreation facilities. Verify adequate water pressure for irrigation purposes and provide booster pumps and or pressure regulation as required. Provide minimum 12 inch (300 mm) cover over PVC irrigation pipe. 1/2-inch (13mm) pipe is not allowed. The Landscape Contractor shall test the entire system in the presence of the Contracting Officer and Landscape Architect-of-Record to ensure proper performance. All irrigation components shall be commercial or institutional quality. Provide rain shut-off device and watertight splices. Sprinkler heads, bodies and nozzles shall be of the same manufacturer.

G205006 1.2 OPERATION AND CONTROL

Assure systems will automatically operate on an “irrigation window” between 2130-0530. Provide compatible and fully functional control if a central control system exists on base. Otherwise, provide evapotranspiration-measuring control with flow meter and master valve with controller capable of indicating visible or auditory notification, such as a blinking light or beeping sound, of system shut-off.

G205006 1.3 ZONING

Provide separate control valves for differing solar exposures, for areas with differing irrigation head types or differing precipitation rates, and top and bottom of slopes. Provide a separate irrigation backflow prevention device and water meter. Turf and shrubs/groundcover are not allowed on the same valve. Provide separate concrete valve box with cast iron lid and valve ID for each valve and wire splice. Provide quick coupling valves at 100 feet (30 m) on center. Provide in-head check valves for sloped areas with 0.5 feet (150 mm) or more in elevation change.

G205006 1.4 TEMPORARY IRRIGATION

Provide ultra-violet resistant pipe and fittings for above-grade, temporary irrigation. Only non-pressure pipe is allowed above grade. Irrigation systems intended to remain in place longer than one year shall be installed below grade.

G205006 1.5 NON-POTABLE IRRIGATION

Provide lavender-colored pipe, sprinkler head and quick coupler caps, valve tags, signage, and associated filtration equipment.

G205006 1.5.1 Controller Charts

Provide one chart for each new controller or existing re-sequenced controller. The chart shall be an actual plan reduced to fit inside maximum dimensions of the controller housing. Use black line print for chart and a different color to indicate each station area of coverage. After chart is completed and approved for final acceptance, seal chart between two 20 mil (0.5 mm) pieces of clear plastic. The chart shall be affixed to the inside of the controller cabinet door using approved mastic or fastening system.

-- End of Section --

SECTION G30

SITE CIVIL/MECHANICAL UTILITIES
4/08

G30 GENERAL

G30 1.1 DESIGN GUIDANCE

Provide the design and installation in accordance with the following references. This Performance Technical Specification (PTS) adds clarification to the fundamental requirements contained in the following Government Standards. The general requirements of this PTS section are located in PTS Section Z10, *General Performance Technical Specification*.

G30 1.1.1 Industry Standards and Codes

AMERICAN SOCIETY OF MECHANICAL ENGINEERS (ASME)

G30 1.1.2 Government Standards

UNIFIED FACILITY CRITERIA (UFC)

UFC 1-300-09N, *Design Procedures*

UFC 3-200-10N, *Civil Engineering*

UFC 3-400-10N, *Mechanical Engineering*

UFC 3-800-10N, *Environmental Engineering for Facility Construction*

G30 1.2 QUALITY ASSURANCE

Materials and assemblies installed in the work shall be inspected and found to be in compliance with industry standards and these specifications prior to acceptance of the work. Items found not to be in compliance shall be removed, or corrective measures taken, to assure compliance with the referenced standard. The Contractor shall perform field tests and provide labor, equipment and incidentals required for testing.

G30 1.2.1 Materials

All materials shall be new, and shall bear the label of standardizing agency whenever standards have been established and label service is normally and regularly furnished by the agency. All equipment provided shall be listed and labeled suitable for the specified purpose, environment, and application and installed in accordance with manufacturer’s recommendations.

G30 1.2.2 Additional Work

Provide such other labor and materials as are required for a complete and usable system in accordance with the requirements of the criteria listed, regardless of whether such materials and associated labor are called for elsewhere in this RFP.

G30 1.2.3 Qualifications of Well Drillers for Water Supply Wells

If required by the state waterworks' regulations, the well driller shall be certified by the state and shall remain certified while constructing the well.

G30 1.2.4 Qualifications of Coating Contractors for Water Storage Tanks

All contractors and subcontractors that perform surface preparation or coating application shall be certified by the Society for Protective Coatings (formerly Steel Structures Painting Council)(SSPC) to the requirements of SSPC QP 1 prior to contract award, and shall remain certified while accomplishing any surface preparation or coating application.

G30 1.2.5 Qualifications of Oil/Water Separator Manufacturers

Manufacturers shall have produced packaged oil/water separate units of similar size required for over five years.

G30 1.3 PERFORMANCE VERIFICATION AND ACCEPTANCE TESTING

Compliance with the requirements will be determined by a review of the design and construction submittals and by field inspection. See Section 01 33 10.05 20, *Design Submittal Procedures*, and Section 01 33 00.05 20, *Construction Submittal Procedures*, for additional requirements.

Verification of satisfactory utility system performance shall be via Performance Verification Testing, as detailed in this section of the RFP. Verification of satisfactory performance shall also be via testing as detailed in the paragraph, "Field Quality Control", in applicable UFGS Specification Sections utilized.

G30 1.3.1 Water Supply Well Performance Verification

Upon completion of the permanent well, conduct performance testing for well capacity, drawdown and pump equipment and water quality testing in accordance with AWWA A100 and its appendices and the state waterworks' regulations.

G30 1.3.2 Water Distribution System Verification Testing

Provide testing on water mains and service lines in accordance with the state waterworks' regulations and the following:

a. Ductile Iron and other materials: AWWA C600.

b. PVC: AWWA C605.

Do not begin testing on any section of a pipeline where concrete thrust blocks have been provided until at least 5 days after placing of the concrete.

G30 1.3.3 Water Booster Pump Station Verification Testing

Test the water booster pump station in accordance with the state waterworks' regulations. Conduct testing on discharge and site piping in accordance with tests for water distribution mains; see G30, paragraph 1.3.2. Test pumps, controls, and alarms, in operation, under design conditions to ensure proper operation of all equipment.

G30 1.3.4 Sanitary Sewer Distribution System Verification Testing

Provide testing on sewer mains and laterals in accordance with the state sewerage regulations.

G30 1.3.4.1 Visual Test

Check each straight run of pipeline for gross deficiencies by holding a light in a manhole; it shall show a practically full circle of light through the pipeline when viewed from the adjoining end of line.

G30 1.3.4.2 Leakage Tests

G30 1.3.5 Sanitary Sewer Manholes Verification Testing

Provide testing on sanitary sewer manholes in accordance with the state sewerage regulations. At minimum, perform hydraulic testing in accordance with ASTM C 969M (ASTM C 969).

G30 1.3.6 Wastewater Pump Station Verification Testing

Test the wastewater pump station in accordance with the state sewerage regulations. Conduct testing on discharge piping and force main in accordance with tests for water distribution mains; see G30, paragraph 1.3.2. Test pumps, controls, and alarms, in operation, under design conditions to ensure proper operation of all equipment.

G30 1.3.7 Storm Sewer System Verification Testing

G30 1.3.7.1 Visual Test

Check each straight run of pipeline for deficiencies by holding a light in a manhole; it shall show a full circle of light through the pipeline when viewed from the adjoining end of line.

G30 1.3.7.2 Leakage Tests for Storm Sewer Under Pavements

Test lines for leakage by either infiltration tests or exfiltration tests, or by low-pressure air tests in accordance with the following:

a. Exfiltration Tests:

ASTM C 969M (ASTM C 969) and perform calculations in accordance with its Appendix.

b. Low-pressure Air Tests:

1) Pipelines: ASTM C 924M (ASTM C 924) and perform calculations in accordance with its Appendix.

2) PVC plastic pipelines: UBPPA UNI-B-6 and perform calculations in accordance with its Appendix.

G30 1.4 DESIGN SUBMITTALS

Design Submittals shall be in accordance with UFGS section 01 33 10.05 20, *Design Submittal Procedures,* UFC 1-300-09N, *Design Procedures,* UFC 3-200-10N, *Civil Engineering, and UFC 3-400-10N, Mechanical Engineering*.

G30 1.5 CONSTRUCTION SUBMITTALS

Submit construction submittals in accordance with PTS Section Z10, *General Performance Technical Specifications*. In addition to the Z10 requirements, the Designer of Record (DOR) shall approve the following construction submittals as a minimum:

All test reports.

G30 1.6 COORDINATION

To the extent that site work is indicated on the RFP drawings, the Contractor shall verify that the locations and inverts of all site utility lines are coordinated with building utility lines. If necessary, the Contractor shall make adjustments to the locations and inverts indicated on the RFP drawings in accordance with applicable codes and standards.

G30 1.7 ANTITERRORISM (AT) STANDARDS

Incorporate the minimum AT standards indicated in UFC 4-010-01, *DoD Minimum Antiterrorism Standards for Buildings*.

G30 1.8 BACKFLOW PREVENTION

The Contractor shall submit backflow prevention training certificates and backflow preventer devices certification in accordance with Section 01 50 00.05 20 (01501N), *Temporary Facilities and Controls for Design-Build*.

G30 1.9 WATER STORAGE TANK

The Contractor shall submit a certificate signed by a registered professional engineer providing a (1) description of the entire tank and foundation structural design loading conditions; (2) description of structural design methods and codes used in establishing allowable stresses and safety factors; (3) statement that the structural design has been checked by experienced engineers specializing in hydraulic structures to ensure that design calculations for member sizes, dimensions and fabrication processes are as prescribed by ACI and AWWA standards; and (4) certification that the completed work was inspected in accordance with AWWA D100 or AWWA D103 as applicable.

G30 1.10 NACE CERTIFIED CATHODIC PROTECTION SPECIALIST QUALIFICATIONS

Submit prior to site welding. Certifications shall not be more than one year old. Submit documentation of NACE certification.

G30 1.11 EXCAVATION, BACKFILLING AND COMPACTION OF UTILITIES

Refer to Section G10, *Site Preparation*.

G30 1.12 DELIVERY, STORAGE AND HANDLING OF MATERIALS

Inspect materials delivered to site for damage. Unload and store with minimum handling. Store materials on site in enclosures or under protective covering. Store plastic piping, jointing materials and rubber gaskets under cover out of direct sunlight. Do not store materials directly on the ground. Keep inside of pipes, fittings, valves, and hydrants free of dirt and debris. Handle in a manner to ensure delivery to the trench in sound undamaged condition. Take special care to avoid injury to coatings and linings on pipe and fittings; make satisfactory repairs if coatings or linings are damaged. Carry, do not drag pipe to the trench.

G3010 WATER SUPPLY

G3010 1.1 WATER SYSTEM DESIGN

The Contractor shall determine domestic and fire demands for the facility and shall verify the design of all components of the domestic and fire protection supply systems. The water system design and construction shall be in accordance with UFC 3-200-10N, *Civil Engineering*, the state waterworks' regulations, and the utility provider's requirements. Design the water supply systems to provide required flows and maintain residual pressures based upon peak demands.

If the new water system is an extension of an existing water system, the Contractor shall obtain all necessary static pressure, residual pressure and flow characteristics of the existing distribution system by actual field tests. The Contractor shall conduct flow and pressure tests and provide design calculations that show the existing lines are capable of handling the additional flows. The new water system shall connect to the nearest existing fitting or water line.

The Contractor shall design the connections to the water system including the necessary meter assemblies and backflow-preventing devices in accordance with the requirements of the Activity or utility provider and the state waterworks regulations.

Wherever possible, valve boxes and all other utility access structures shall be located out of paved areas.

G301001 WELL SYSTEMS

The potable water well system shall be designed and constructed in accordance with AWWA A100 and its appendices; the state waterworks' regulations, and the system owner's preferences and requirements.

G301001 1.1 WATER METER

Provide a water meter on the well pump discharge piping aboveground in a pump enclosure or in a meter vault underground. Provide type of water meter and remote reading capability in accordance with system owner's preferences and requirements: AWWA C700, displacement type; AWWA C701, turbine type; or AWWA C702, compound type.

G301001 1.2 TEST HOLE

Drill test hole(s) at the well site before construction of the permanent well to determine the existing site-specific geologic/hydrologic conditions and groundwater-quality parameters. A test hole may be incorporated into the finished construction provided it meets the requirements for a finished well. Seal test holes not used in finished construction as recommended in accordance with AWWA C654 and the state waterworks' regulations. Upon completion of test hole, provide recommendations for permanent wells and submit data obtained at each well site. Include with the recommendations the appropriate depth, details of construction, length and location of screens, screen openings, gravel size, grout, and an estimation of the quantity of water that can be obtained from each water-bearing stratum and from each completed well. Submit electric log, a drillers log drawn to scale with coarseness and fineness modulus of each strata, time penetration log (time to drill through each formation), and sieve analysis to substantiate recommendations.

G301001 1.3 WELL CONSTRUCTION

G301001 1.3.1 Well Development

Provide well development in accordance with AWWA A100 and the state waterworks' regulations.

G301001 1.3.2 Disinfection

Disinfect well, equipment, and material in accordance with AWWA C654 and the state waterworks' regulations. Provide a sanitary seal for the well to prevent contamination until the pump foundation and pump are installed on the well.

G301001 1.4 ABANDONMENT OF EXISTING WELLS

Abandon and seal existing wells in accordance with AWWA A100 and the state waterworks' regulations.

G301002 POTABLE WATER DISTRIBUTION

G301002 1.1 WATER SYSTEM DESIGN

Provide all materials, equipment, labor, testing, and miscellaneous related items for water distribution mains and service lines to the facility and connections to the existing water system in accordance with UFC 3-200-10N, *Civil Engineering*; the utility provider's requirements; and the state waterworks' regulations; whichever is more stringent.

Available flow at the residual pressure at each point of connection shall be determined by conducting flow tests in accordance with AWWA M17 and NFPA 291.

Water main piping, service lines, fittings, valves, accessories and all other materials shall meet the American Water Works Association (AWWA) standards for a minimum system working pressure of 150 psi (1050 kPa).

G301002 1.2 WATER DISTRIBUTION MAINS

For underground applications, water mains 12 inches (300 mm) in diameter and less shall be ductile iron, PVC, or high density polyethylene (HDPE). Water mains deeper than 10 feet (3.0 m) or larger than 12 inches (300 mm) in diameter shall be ductile iron.

For aboveground applications, water mains shall be flanged ductile iron pipe.

G301002 1.2.1 Materials

a. Ductile Iron Pressure Pipe

1) Pipe: AWWA C151, Pressure Class 350.

2) Fittings: AWWA C110 or AWWA C153.

3) Interior Lining: AWWA C104.

4) Exterior Protection (if required): AWWA C105, polyethylene encasement.

b. PVC Pressure Pipe

1) Pipe: AWWA C900, Pressure Class 150.

2) Fittings: Ductile Iron (AWWA C110 or AWWA C153).

c. HDPE Pressure Pipe: AWWA C906.

d. Flanged Ductile Iron Pipe

1) Pipe: AWWA C115 and its appendices.

2) Fittings: AWWA C110 or AWWA C153.

3) Lining: AWWA C104.

G301002 1.2.2 Installation

a. Ductile Iron: AWWA C600.

b. PVC: AWWA C605.

c. HDPE: applicable requirements of ASTM D 2774.

Provide a continuous length of tracer wire for the full length of each run of nonmetallic pipe.

G301002 1.2.3 Connections to Existing Water Lines

Make connections to existing water lines after approval from the system owner is obtained and with a minimum interruption of service on the existing line. Make connections to existing lines under pressure in accordance with the recommended procedures of the manufacturer of the pipe being tapped.

G301002 1.3 WATER SERVICE LINES

Water service lines less than 4 inches (100 mm) in diameter shall be copper tubing, PVC, or polyethylene (PEX) tubing. Water service lines 4 inches (100 mm) and 6 inches (150 mm) in diameter shall be ductile iron pipe and PVC pressure pipe; see G301002, paragraph 1.2, “Water Distribution Mains” for additional requirements for ductile iron and PVC piping.

G301002 1.3.1 Materials

a. Copper Tubing

1) Pipe: ASTM B 88M (ASTM B 88), Type K.

2) Fittings for Solder-Type Joint: ANSI B16.8 or ASME B16.22.

3) Fittings for Compression-Type Joint: ASME B16.26, flared tube type.

b. PVC Pressure Pipe

1) Pipe: ASTM D1785, Schedule 40 or ASTM D 2241, with SDR rating for 160 psi (1.1 MPa) pressure rating.

2) Fittings: ASTM D 2466.

3) Joints: Elastomeric gaskets for pressure rating; solvent cement joints, ASTM D 2564.

c. Polyethylene Tubing: AWWA C901.

G301002 1.3.2 Service Connections

Connect service lines 2-inch (50 mm) diameter or less to the main by a corporation stop and install a gate valve on service line below the frostline.

a. Ductile-iron water mains: AWWA C600.

b. PVC water mains: UBPPA UNI-B-8 and the recommendations of AWWA M23, Chapter 9, "Service Connections."

G301002 1.3.3 Installation

Install pipe, fittings and accessories in accordance with manufacturer's instructions.

a. Metallic Piping: applicable requirements of AWWA C600.

b. PVC: applicable requirements of ASTM D 2774 and ASTM D 2855.

c. Polyethylene: applicable requirements of ASTM D 2774 and ASTM F 645.

G301002 1.4 CORROSION PROTECTION

G301002 1.4.1 Insulating Joints

Provide insulating joints to prevent contact between dissimilar metals at the joint between adjacent sections of piping in accordance with the pipe manufacturer's recommendations. Ensure that there is no metal-to-metal contact between dissimilar metals after the joint has been assembled.

To prevent the possibility of bi-metallic corrosion, service lines of dissimilar metal to the water mains and the attendant corporation stops shall be wrapped with polyethylene or suitable dielectric tape for a minimum clear distance of 3 feet (900 mm) from the main.

G301002 1.5 VALVES

Valves shall be the same diameter and have the same joint ends as the mains to which they are installed. Each type of valve shall be of one manufacturer.

G301002 1.5.1 Gate Valves

G301002 1.5.1.1 Location

Valves shall be installed at all new points of connection. At a minimum, valves shall be located to ensure that no more than two fire hydrants will be out of service in the event of a single break in a water main. Valves shall be located outside of pavement and heavy traffic areas whenever possible.

G301002 1.5.1.2 Gate Valves 3-inch (75 mm) and Larger in Diameter

a. Valves (20-inch and smaller in diameter): AWWA C509 or AWWA C515, nonrising stem and of one manufacturer.

b. Valves (greater than 20-inch in diameter): AWWA C500.

c. Valves for Indicator Post: AWWA C500 with indicator post flange in accordance with applicable requirements of UL 262.

d. Interior Coating: AWWA C550.

G301002 1.5.1.3 Gate Valves Smaller than 3-inch (75 mm) in Diameter

MSS SP-80, Class 150, solid wedge. Valves shall have flanged or threaded end connections, with unions on both sides of the valve and a handwheel operator.

G301002 1.5.1.4 Valve Box

Provide a cast iron, adjustable, valve box for each gate valve on buried piping. Valve boxes shall be of a size suitable for the valve on which it is to be used with a minimum diameter of 5-1/4 inches (130 mm). Provide a round head and cast the word "WATER" on the lid.

G301002 1.5.2 Check Valves

Valves sized 2-inches (50 mm) to 24-inches (600 mm) shall be swing-check type (AWWA C508) and have a protective epoxy interior coating conforming to AWWA C550. For underground applications, provide check valve in a valve vault.

G301002 1.5.3 Air Release, Air/Vacuum, and Combination Air Valves

AWWA C512 and AWWA M51.

G301002 1.5.4 Corporation Stops

If service lines 2—inch diameter or less are tapping water mains, provide corporation stops. The corporation stops shall be ground key type, bronze, ASTM B61 or ASTM B62.

G301002 1.5.5 Installation of Valves

Make and assemble joints to valves as specified for making and assembling the same type of joints between pipe and fittings.

G301002 1.6 WATER METERS

Provide water meter and remote reading as required by the utility provider and in accordance with AWWA standards.

G301002 1.7 BACKFLOW PREVENTION

Provide backflow prevention and cross connection control in accordance with AWWA M-14 and governing local/state plumbing codes and waterworks' regulations.

G301002 1.8 FIRE HYDRANTS

Fire hydrants shall all be of one manufacturer. Provide protection for fire hydrants located in areas subject to vehicle damage. Fire hydrants shall have National Standard threads on hose and pumper connections. Provide a 6 inch (150 mm) inlet, two 2.5 inch (62 mm) hose connections and one pumper connection sized to accommodate local fire department equipment

requirements. Stencil hydrant number and main size on the hydrant barrel using black stencil paint.

a. Dry Barrel Fire Hydrants: AWWA C502 with frangible sections.

b. Wet Barrel Fire Hydrants: AWWA C503 or UL 246, "Wet Barrel" design, with breakable features.

c. Installation: Install hydrants with the pumper connection facing the adjacent paved surface. If there are two, paved adjacent surfaces, contact the Contracting Officer for further direction.

G301002 1.9 THRUST RESTRAINT

Provide thrust restraint for all piping, valves, fittings, and other appurtenances of the water distribution system.

a. Concrete Thrust Blocks: AWWA C600.

b. Restrained Joints: Pipe manufacturer’s recommendations and required length of pipe to be restrained calculated in accordance with UFC 3-200-10N, *Civil Engineering*.

G301002 1.10 DISINFECTION

Disinfect new water piping and existing water piping affected by Contractor's operations in accordance with the state waterworks’ regulations and AWWA C651.

G301003 POTABLE WATER STORAGE

G301003 1.1 POTABLE WATER STORAGE TANKS

Provide potable water storage facilities in accordance with UFC 3-200-10N, *Civil Engineering*, and the state waterworks’ regulations.

An elevated, steel water storage tank shall be in accordance with AWWA D100. A ground, steel water storage tank shall be in accordance with AWWA D100 for welded tanks and AWWA D103 for bolted tanks.

G301003 1.2 TANK ACCESSORIES

Piping and valves shall be in accordance with G301002. An altitude valve shall be installed in a valve vault with appropriate shut off valves and check valve.

G301003 1.3 TANK COATINGS

G301003 1.3.1 Interior Coating System

Provide interior coating system complying with NSF 61 and the state waterworks’ regulations.

G301003 1.3.2 Exterior Coating System

Primer coat shall be epoxy polyamide, MIL-DTL-24441/19 (Formula 159, Type III). Intermediate coat shall be epoxy polyamide, MIL-DTL-24441/31 (Formula 152, Type IV, White (Tinted)). Tint to approximately FED-STD-595 color number 27778 parchment using pigment dispersions prepared for

epoxy paint tinting. Manufacturer shall tint material and appropriately label. All other requirements of this Military Specification apply.

Provide polyurethane coating topcoat of MIL-PRF-85285, Type II, Beige FED-STD-595 color number 27769 in gloss. The color of the final coat shall be approved in writing by the Contracting Officer before application begins.

G301004 FIRE PROTECTION WATER DISTRIBUTION

G301004 1.1 GENERAL REQUIREMENTS

Refer to applicable portions of Section G301002 and Section D40, *Fire Protection Systems*. Water main piping, service lines, fittings, valves, accessories and all other materials shall meet the American Water Works Association (AWWA) standards for a minimum system working pressure of 200 psi (1380 kPa).

G301004 1.2 DETECTOR CHECKS

UL 312; detector check shall include bypass meter, piping, gate valves, check valve and connections to detector check valve. Set valve to allow minimal water flow through bypass meter when major water flow is required.

G301004 1.3 FIRE DEPARTMENT CONNECTIONS

UL 405.

G301004 1.4 INDICATOR POSTS

UL789.

G301005 FIRE PROTECTION WATER STORAGE

Refer to G301003.

G301006 NON-POTABLE WATER DISTRIBUTION

Refer to G301002; note that system disinfection is not required.

G301007 PUMPING STATIONS

If a pump station is allowed, provide a packaged booster pump station including pumps, piping, valves, sensors, controls, and accessories to maintain the water system pressure in accordance with UFC 3-200-10N, *Civil Engineering*, and the state waterworks' regulations.

The packaged booster pump station shall have an Underwriter's Laboratories (UL) label indicating compliance of the equipment under the packaged pumping systems UL listing category. This label shall be inclusive of the entire station with enclosure so as to demonstrate compliance with the National Electrical Code requirements for working clearances and wiring procedures.

All interior coatings of pumps, piping, valves and other accessories shall be a National Standard Foundation (NSF) Standard 61 certified material for potable water.

G301008 PACKAGED WATER TREATMENT PLANTS

Provide packaged water treatment plants in accordance with UFC 3-200-10N, *Civil Engineering*, for pipeline materials and the state waterworks' regulations for treatment plant requirements.

G3020 SANITARY SEWER

G3020 1.1 GENERAL REQUIREMENTS

The gravity sanitary sewage collection system shall be designed and constructed in accordance with UFC 3-200-10N, *Civil Engineering*, and the state sewer collection and treatment regulations. The new sanitary sewage collection system shall connect to the nearest existing sanitary manholes and/or sanitary lines adjacent to the project site. The Contractor shall provide design calculations that show the existing system is capable of handling the additional flows.

In areas where chemicals and other substances may be stored (including mechanical and electrical rooms), it is recommended that the floor drains be eliminated or provisions made to prevent spills from entering the sanitary sewer system. If there is process flow from equipment, discharge can be hard piped, with air gap, to the sanitary sewer.

Wherever possible, manholes and all other utility access structures shall be located out of paved areas.

G302001 SANITARY SEWER PIPING

G302001 1.1 GENERAL REQUIREMENTS

Provide all materials, equipment, labor, testing, and miscellaneous related items to provide sanitary sewage lines necessary for distribution and services to the buildings.

G302001 1.2 GRAVITY SEWER PIPING

Gravity sewer mains and laterals shall be PVC sewer pipe and fittings, except under roadways or at depths greater than 10 feet (3.0 m) where ductile iron pipe shall be provided.

G302001 1.2.1 Materials

a. PVC Gravity Sewer Pipe

1) Piping and Fittings: ASTM D 3034, SDR 35.

2) Joints: ASTM D 3212 and ASTM F 477.

b. Ductile Iron Gravity Sewer Pipe

1) Piping: ASTM A 746. Provide required Thickness Class based on design information and methods in ASTM A 746.

2) Fittings: AWWA C110 or AWWA C153.

3) Joints: AWWA C111.

4) Interior Coating: AWWA C104.

5) Exterior Protection (if required): AWWA C105, polyethylene encasement.

G302001 1.2.2 Connections to Existing Lines

Obtain approval from the Contracting Officer before making a connection to an existing line. Conduct work so that there is minimum interruption of service on existing line and provide a new manhole at the connection point.

G302001 1.2.3 Installation

Install pipe, fittings and accessories in accordance with manufacturer's instructions.

a. PVC: ASTM D 2321. Do not use ASTM D 2321 Class IV or V materials for bedding, haunching or initial backfill materials.

b. Ductile Iron: AWWA C600.

G302001 1.3 PIPING FOR CLEANOUTS

G302001 1.3.1 Materials

a. Cast-Iron Soil Pipe for Cleanouts

1) Pipe: ASTM A 74, service.

2) Joints: ASTM C 564 compression-type rubber gaskets.

3) Exterior Protection (if required): AWWA C105, polyethylene encasement.

G302001 1.3.2 Installation

Install cast iron pipe and fittings in accordance with the recommendations of the pipe manufacturer.

G302002 SANITARY SEWER MANHOLES & CLEANOUTS

G302002 1.1 GENERAL REQUIREMENTS

Provide all materials, equipment, labor, testing, and miscellaneous related items for the sanitary manholes in accordance with the following:

a. Manhole rim elevations shall be set flush with finished surface of paved areas or 1 inch (25 mm) above finished grade in unpaved areas.

b. Resilient connectors for making joints between manhole and pipes entering manhole shall conform to ASTM C 923M (ASTM C 923).

c. Provide drop manholes when a gravity sewer pipe enters a manhole at an elevation of 24 inches (610 mm) or more above the manhole invert.

G302002 1.2 PRECAST CONCRETE MANHOLES

ASTM C 478M (ASTM C 478); base and first riser shall be monolithic.

Precast manhole sections shall have:

a. ASTM C 990M (ASTM C 990) butyl gaskets;

b. ASTM C 443M (ASTM C 443) rubber O-ring joints; or

c. AASHTO M 198, Type B preformed plastic gaskets.

G302002 1.3 CAST-IN-PLACE CONCRETE MANHOLES

Reinforced concrete; designed according to ASTM C 890 for A-16 (AASHTO HS20-44), heavy-traffic, structural loading. Concrete work shall be in accordance with ACI 301M (ACI 301) and ACI 350-01; provide a minimum compressive strength of 4000 psi (28 MPa).

G302002 1.4 MANHOLE FRAMES AND COVERS

FS A-A-60005; cast iron or ductile iron; designed to accommodate the traffic loadings. The word "Sewer" shall be stamped or cast into covers so that it is plainly visible.

G302002 1.5 MANHOLE STEPS

a. Zinc-coated steel: 29 CFR 1910.27.

b. Plastic or rubber coating pressure molded to steel: ASTM D 4101, copolymer polypropylene; or ASTM C 443M (ASTM C 443), except shore A durometer hardness shall be 70 plus or minus 5.

Aluminum steps or rungs will not be permitted.

Steps are not required in manholes less than 4 feet (1.2 m) deep.

G302002 1.6 MANHOLE CONSTRUCTION

Where a new manhole is constructed on an existing line, remove existing pipe as necessary to construct the manhole. Cut existing pipe so that pipe ends are approximately flush with the interior face of manhole wall, but not protruding into the manhole. For changes in direction of the sewer and entering branches into the manhole, make a circular curve in the manhole invert of as large a radius as manhole size will permit. For cast-in-place concrete, no parging will be permitted on interior manhole walls.

G302002 1.7 CONNECTIONS TO EXISTING MANHOLES

Pipe connections to existing manholes shall be centered on the manhole. Holes for the new pipe shall be of sufficient diameter to allow packing cement mortar around the entire periphery of the pipe but no larger than 1.5 times the diameter of the pipe. Cutting the manhole shall be done in a manner that will cause the least damage to the walls.

G302002 1.8 CLEANOUTS

Construct cleanouts of cast iron soil pipe and fittings; see G302001, paragraph 1.3.

G302003 LIFT STATIONS AND PUMPING STATIONS

G302003 1.1 GENERAL REQUIREMENTS

If a pump station is allowed, provide all materials, equipment, labor, testing and miscellaneous related items for a packaged lift or pump station system for the facility in compliance with the UFC 3-200-10N, *Civil*

Engineering; the state sewerage regulations; and the utility provider's requirements.

G302003 1.2 SUBMERSIBLE PUMPS

Pumps handling raw wastewater shall be capable of passing spheres of at least 3 inches (75 mm) in diameter. The pump's suction and discharge openings shall be at least 4 inches (100 mm) in diameter.

Provide submersible type sewage pumps, with guide rail system. Include ASTM A48M (ASTM A48), Class 25, nonclog, cast-iron impeller; and hermetically sealed motor with moisture-sensing probe, mechanical seals, and waterproof power cable. Guide rail system shall be constructed of stainless steel. Provide a stainless steel lifting chain for raising and lowering the pump in the basin.

G302003 1.3 GRINDER PUMPS

Provide grinder-type sewage pumps, with guide rail system. Include stainless steel or bronze impeller and hermetically sealed motor with moisture-sensing probe, mechanical seals, and waterproof power cable. Guide rail system shall be constructed of stainless steel. Provide a stainless steel lifting chain for raising and lowering the pump in the basin.

G302003 1.4 SUCTION LIFT PUMPS

Pumps handling raw wastewater shall be capable of passing spheres of at least 3 inches (75 mm) in diameter. The pump's suction and discharge openings shall be at least 4 inches (100 mm) in diameter.

Provide dry-chamber-mounting, vacuum-primed, nonclog sewage pumps located in dry compartment above wet pit. Include ASTM A48M (ASTM A48), Class 25, nonclog, cast iron impeller; mechanical or stuffing box seals; pedestal mounted motor; and suction piping extending to bottom of wet pit.

Suction-lift pumps shall be capable of automatic rapid self priming and re-priming at the "lead pump on" elevation. Suction piping shall not exceed 25 feet (7.6 meters) in total length. Priming lift at the "lead pump on" elevation shall include a safety factor of at least 4 feet (1.2 meters) from the maximum allowable priming lift for the specific equipment at design operating conditions. The combined total of dynamic suction-lift at the "pump off" elevation and the required net positive suction head at design operating conditions shall not exceed 22 feet (6.7 meters).

G302003 1.5 PUMP MOTOR

Provide pump motor sized to accommodate pump operation along the entire impeller curve.

G302003 1.6 STATION PIPING WITHIN WET WELL AND VALVE VAULT

G302003 1.6.1 Piping Less than 4-Inch (100 mm) in Diameter

a. PVC Pressure Pipe

1) Pipe: ASTM D 1785, Schedule 80.

2) Fittings: Schedule 80 socket fittings, ASTM D 2467; Schedule 80 threaded fittings, ASTM D 2464.

G302003 1.6.2 Piping 4 inch (100 mm) Diameter and Larger

a. Flanged Ductile Iron Pipe

1) Pipe: AWWA C115 and its appendices.

2) Fittings: AWWA C110 or AWWA C153.

3) Lining: AWWA C104.

G302003 1.7 FORCE MAINS

G302003 1.7.1 Force Mains for Submersible and Suction Lift Pumps

Force mains shall be at least 4 inches (100 mm) in diameter and shall be either ductile iron or PVC pressure pipe.

a. Ductile Iron Pressure Pipe

1) Pipe: AWWA C151, Pressure Class 350.

2) Fittings: AWWA C110 or AWWA C153.

3) Interior Lining: AWWA C104.

4) Exterior Protection (if required): AWWA C105, polyethylene encasement.

b. PVC Pressure Pipe

1) Pipe: AWWA C900, Pressure Class 150.

2) Fittings: Ductile Iron (AWWA C110 or AWWA C153).

G302003 1.7.2 Force Mains for Grinder Pumps

Force mains less than 4 inches (100 mm) in diameter shall be PVC pressure pipe:

a. PVC Pressure Pipe

1) Pipe: ASTM D 1785, Schedule 40 or ASTM D 2241, with SDR rating for 160 psi (1.1 MPa) pressure rating.

2) Fittings: ASTM D 2466.

3) Joints: Elastomeric gaskets for pressure rating; solvent cement joints, ASTM D 2564.

G302003 1.8 PIPING ACCESSORIES

G302003 1.8.1 Insulating Joints

Provide between pipes of dissimilar metals a rubber gasket or other approved type of insulating joint or dielectric coupling to effectively prevent metal-to-metal contact between adjacent sections of piping.

G302003 1.8.2 Accessories

Provide flanges, connecting pieces, transition glands, transition sleeves, and other adapters as required.

G302003 1.8.3 Flexible Flanged Coupling

Provide flexible flanged coupling applicable for sewage as indicated. Use flexible flanged coupling designed for a working pressure of 350 psi (2400 kPa).

G302003 1.9 VALVES

Suitable shutoff and check valves shall be provided on the discharge line of each pump. Locate the check valve between the shutoff valve and the pump. Locate valves in accordance with state sewerage regulations. Check valves shall be suitable for the material being handled and placed on the horizontal portion of the discharge piping except for ball check valves, which may be placed in the vertical run. Valves shall be capable of withstanding normal pressure and water hammer. Use valves from one manufacturer.

G302003 1.9.1 Shut Off Valves

G302003 1.9.1.1 Shut Off Valves Less than 4 Inch (100 mm) in Diameter

PVC ball valves.

G302003 1.9.1.2 Shut Off Valves 4 Inch (100 mm) and Larger in Diameter

AWWA C509 or AWWA C515, nonrising stem, and flanged. Provide valves with handwheels that open by counterclockwise rotation of the valve stem. Provide epoxy coating in accordance with AWWA C550.

G302003 1.9.2 Check Valves

G302003 1.9.2.1 Check Valves Less than 4-Inch (100 mm) in Diameter

Neoprene ball check valve with integral hydraulic sealing flange, designed for a hydraulic working pressure of 175 psi (1200 kPa).

G302003 1.9.2.2 Check Valves 4-Inch (100 mm) and Larger in Diameter

AWWA C508, flanged. Provide a nonclog, swing check valve rated for not less than 175 psig (1200 kPa) working pressure capable of passing 3-inch (75 mm) diameter solids.

G302003 1.9.3 Air Relief Valves

Provide air relief valves at high points in the force main to prevent air locking in accordance with AWWA M51. Provide vacuum relief valves, where required, to relieve negative pressures on force mains.

G302003 1.10 IDENTIFICATION TAGS AND PLATES

Provide valves with tags or plates numbered and stamped for their usage. Use plates and tags of brass or nonferrous material and mounted or attached to the valve.

G302003 1.11 THRUST RESTRAINT

Provide thrust restraint for force mains, valves and other features of the wastewater distribution system.

a. Concrete Thrust Blocks: AWWA C600.

b. Restrained Joints: Pipe manufacturer's recommendations and required length of pipe to be restrained calculated in accordance with UFC 3-200-10N, *Civil Engineering*.

G302003 1.12 STATION CONTROL SYSTEM

G302003 1.12.1 Operating Controls

G302003 1.12.2 Alarm Controls

Provide alarms for all pumping and lift stations; at minimum provide alarms for high level, power failure, pump failure, unauthorized entry or any cause of station malfunction. Provide alarms as required by the pump manufacturer to obtain warranty.

G302003 1.12.3 Telemetry

If required, provide a telemetry system in accordance with state sewer collection and treatment regulations and system owner's requirements to relay alarms to a facility that is manned 24 hours a day.

G302003 1.13 UNDERGROUND ENCLOSURES

G302003 1.14 STATION ACCESSORIES

G302003 1.14.1 Ventilation

Covered wet wells shall have provisions for air displacement venting to the outside. Galvanized ASTM A 53/A 53M pipe with insect screening.

Provide adequate ventilation for all pump stations.

G302003 1.14.2 Metering

Provide devices for measuring wastewater flow at all pumping stations. Provide indicating, totalizing and recording flow measurement at pumping stations with a 1200 gpm (76 l/s) or greater design peak hourly flow. For smaller stations, provide elapsed time meters in conjunction with pumping rate tests.

G302003 1.14.3 Pipe and Valve Supports

Use schedule 40 galvanized steel piping conforming to ASTM A 53/A 53M for pipe and valve supports. Provide either ANSI B16.3 or ANSI B16.11 galvanized threaded fittings.

G302003 1.14.4 Miscellaneous Metals

Use stainless steel bolts, nuts, washers, anchors, and supports for installation of equipment.

G302004 PACKAGED SANITARY SEWER TREATMENT PLANTS

Provide packaged wastewater treatment facilities in accordance with UFC 3-200-10N, *Civil Engineering*, for pipeline materials and the state sewer collection and treatment regulations for treatment plant requirements.

G302005 SEPTIC TANKS

Provide septic tanks in accordance with the state and treatment regulations and the International Private Sewage Disposal Code 2000.

G302006 DRAIN FIELDS

Provide drain fields in accordance with the state and treatment regulations and the International Private Sewage Disposal Code 2000.

G302090 OTHER SANITARY SEWER

G302090 1.1 OIL/WATER SEPARATOR

Refer to G303090.

G3030 STORM SEWER

Provide all materials, equipment, labor, testing, and miscellaneous related items to provide storm drainage collection system necessary to drain the site. The storm sewer collection system shall be designed and constructed in accordance with UFC 3-200-10N, *Civil Engineering*; the utility provider's requirements; and the state stormwater management laws and regulations. Design project site to prevent stormwater runoff in excess of the capacity of the existing utility system.

G303001 STORM SEWER PIPING

G303001 1.1 PIPING

Storm sewer piping less than 12 inches (300 mm) in diameter shall be PVC or ductile iron. Storm sewer piping 12 inches (300 mm) and larger in diameter shall be reinforced concrete or corrugated steel; corrugated aluminum and HDPE pipe may only be used when written approval is received by the Government's Civil Reviewer or indicated in another part of the RFP.

Subsurface drainage piping shall be perforated PVC or HDPE.

G303001 1.1.1 Materials

a. PVC Pipe

1) Piping and Fittings: ASTM D 3034, SDR 35.

2) Joints: ASTM D 3212 and ASTM F 477.

b. Ductile Iron Pipe

1) Piping: ASTM A 746. Provide required Thickness Class based on design information and methods in ASTM A 746.

2) Fittings: AWWA C110 or AWWA C153.

3) Joints: AWWA C111.

4) Interior Coating: AWWA C104.

5) Exterior Protection (if required): AWWA C105, polyethylene encasement.

c. Reinforced Concrete Pipe

1) Circular Pipe: ASTM C 76M (ASTM C 76). Provide required Class based on design information and methods in ASTM C 76M (ASTM C 76). Class III minimum.

2) Elliptical Pipe: ASTM C 507M (ASTM C 507). Provide required Class based on design information and methods in ASTM C 76M (ASTM C 76).

3) Joints:

a) ASTM C 990M (ASTM C 990) butyl gaskets;

b) ASTM C 443M (ASTM C 443) rubber O-ring joints; or

c) AASHTO M 198, Type B preformed plastic gaskets.

d. Corrugated Aluminum Pipe

1) Piping: ASTM B 745.

2) Joints: Coupling bands conforming to ASTM B 745.

3) Coating: Fully bituminous coated for all applications in accordance with ASTM A 849. For applications where piping is part of a piped storm sewer system (not a culvert), pipe shall be fully bituminous coated, invert (half) paved with concrete lining in accordance with ASTM A 849.

e. Corrugated Steel Pipe

1) Piping: ASTM A 760.

2) Joints: Coupling bands conforming to ASTM A 760.

3) Coating: Fully bituminous coated for all applications in accordance with ASTM A 849. For applications where piping is part of a piped storm sewer system (not a culvert), pipe shall be fully bituminous coated, invert (half) paved with concrete lining in accordance with ASTM A 849.

f. HDPE

1) Piping: AASHTO M 294 Type S, corrugated.

2) Joints: Soiltight.

g. Perforated PVC Pipe: ASTM D 2729.

h. Perforated HDPE Pipe

1) Piping and Fittings: AASHTO M 252, Type S, corrugated.

2) Joints: Soiltight.

G303001 1.1.2 Installation

Install piping in accordance with manufacturer’s recommendations.

a. PVC: ASTM D 2321. Do not use ASTM D 2321 Class IV or V materials for bedding, haunching or initial backfill materials.

b. Ductile Iron: AWWA C600.

c. Reinforced Concrete: ACPA 01-102 and 01-103.

d. Corrugated Aluminum: ASTM B 788.

e. Corrugated Steel: ASTM A 798.

f. HDPE: CPPA 100.

g. Perforated PVC and Perforated HDPE: ASTM D 2321. Do not use ASTM D 2321 Class IV or V materials for bedding, haunching or initial backfill materials.

G303001 1.2 PIPING FOR CLEANOUTS

G302001 1.2.1 Materials

a. Cast-Iron Soil Pipe for Cleanouts

1) Pipe: ASTM A 74, service.

2) Joints: ASTM C 564 compression-type rubber gaskets.

3) Exterior Protection (if required): AWWA C105, polyethylene encasement.

G302001 1.2.2 Installation

Install cast iron pipe and fittings in accordance with the recommendations of the pipe manufacturer.

G303002 STORM SEWER STRUCTURES

G303002 1.1 GENERAL REQUIREMENTS

Provide all materials, equipment, labor, testing, and miscellaneous related items for the drainage structures in accordance with the following:

a. Structure rim elevations shall be set flush with finished surface of paved areas or 1 inch (25 mm) above finished grade in unpaved areas.

b. Resilient connectors for making joints between manhole and pipes entering manhole shall conform to ASTM C 923M (ASTM C 923).

c. Provide precast or cast-in-place concrete drainage structures, except cast-in-place concrete is required for airfield drainage structures, headwalls and gutters.

G303002 1.2 PRECAST CONCRETE INLETS

Provide work and materials in accordance with applicable requirements of the State Highway Specifications (SHS) and standards where the project is located.

G303002 1.3 CAST-IN-PLACE CONCRETE DRAINAGE STRUCTURES

Provide work and materials in accordance with drainage structures indicated in the State Highway Specifications (SHS) and standards where the project is located.

For airfield drainage structures, provide work and materials in accordance with FAA ACA 150/5370-10B.

G303002 1.4 DRAINAGE STRUCTURE FRAMES AND COVERS

FS A-A-60005; cast iron or ductile iron; designed to accommodate the traffic loadings. The word "Storm" shall be stamped or cast into covers so that it is plainly visible.

For airfield drainage structures, fabricate frames and covers of standard commercial grade steel welded by qualified welders in accordance with AWS D1.1/D1.1M. Covers shall be of rolled steel floor plate having an approved anti-slip surface. Steel frames and covers shall be hot dipped galvanized after fabrication. At the contractor's option, ductile iron covers and frames may be used for airfield drainage structures if designed for a minimum proof load of 100,000 pounds (45,000 kg) in lieu of the steel frames and covers. Covers shall be of the same material as the frames (i.e. ductile iron frame with ductile iron cover, galvanized steel frame with galvanized steel cover). Proof loading shall be performed in accordance with FS A-A-60005 and ASTM A 48/A 48M. Proof loads shall be physically stamped into the cover. Provide the Contracting Officer copies of previous proof load test results performed on the same frames and covers as proposed for this contract. The top of the structure shall be modified to accept the ductile iron structure in lieu of the steel structure indicated. The finished structure shall be level and non-rocking, with the top flush with the surrounding pavement.

G303002 1.5 DRAINAGE STRUCTURE STEPS

a. Zinc-coated steel: 29 CFR 1910.27.

b. Plastic or rubber coating pressure molded to steel: ASTM D 4101, copolymer polypropylene; or ASTM C 443M (ASTM C 443), except shore A durometer hardness shall be 70 plus or minus 5.

Aluminum steps or rungs will not be permitted.

Steps are not required in structures less than 4 feet (1.2 m) deep.

G303002 1.6 DRAINAGE STRUCTURE CONSTRUCTION

Where a new structure is constructed on an existing line, remove existing pipe as necessary to construct the structure. Cut existing pipe so that pipe ends are approximately flush with the interior face of structure wall, but not protruding into the structure.

G303002 1.7 CONNECTIONS TO EXISTING STRUCTURES

Pipe connections to existing structures shall be centered on the structure. Holes for the new pipe shall be of sufficient diameter to allow packing cement mortar around the entire periphery of the pipe but no larger than 1.5 times the diameter of the pipe. Cutting the structure shall be done in a manner that will cause the least damage to the walls.

G303002 1.8 CLEANOUTS

Construct cleanouts of cast iron soil pipe and fittings; see G303001, paragraph 1.2.

G303003 LIFT STATIONS

A stormwater pump station(s) will not be allowed.

G303004 CULVERTS

Culverts less than 12 inches (300 mm) in diameter shall be PVC or ductile iron. Culverts 12 inches (300 mm) and larger in diameter shall be reinforced concrete or corrugated steel; corrugated aluminum and HDPE pipe may only be used when written approval is received by the Government's Civil Reviewer or indicated in another part of the RFP.

Flared end sections shall the same material as pipe material.

Provide erosion control riprap in accordance with the State Highway Specifications (SHS) and standards where the project is located.

See G303001, paragraphs 1.1.1 and 1.1.2 for material and installation requirements.

G303005 HEADWALLS

Provide cast-in-place concrete headwalls in accordance with the State Highway Specification (SHS) and standards where the project is located.

G303006 EROSION & SEDIMENT CONTROL MEASURES

Refer to Section G103011.

G303007 STORMWATER MANAGEMENT

G303007 1.1 STORMWATER COLLECTION AND STORAGE

Provide permanent detention/retention ponds and other drainage features to regulate stormwater runoff and to prevent damage to the site and off-site. Integrate permanent stormwater management ponds, swales, and other stormwater management features, into the total site design to provide an aesthetically pleasing and harmonious landscape. Develop and construct the ponds and other drainage features in accordance with UFC 3-200-10N, *Civil Engineering*, and the state stormwater management Laws and Regulations.

G303090 OTHER STORM SEWER

G303090 1.1 OIL/WATER SEPARATOR

Provide an oil/water separator to remove free oil from oil-in-water mixtures originating from proposed facility operations. Provide grit protection upstream of the oil/water separator.

The oil/water separator shall utilize coalescing media and conform to the applicable guidelines of the American Petroleum Institute (API).

Provide materials or a coating system which will protect the separator from the oil-in-water mixture, atmosphere, and in-situ soil conditions.

Use a separator with a completely removable cover.

G3040 HEATING DISTRIBUTION

G304001 OVERHEAD HOT WATER SYSTEMS

G304001 1.1 PIPING & FITTINGS

Hot water piping shall be ASTM A 53, Type E (electric-resistance welded), Grade A or B), or Type S (seamless, Grade A or B); black steel, Weight Class XS (Extra Strong). ASTM A 106, Grade A or B, black steel, Schedule 80 may be used.

G304001 1.2 INSULATION

Mineral fiber, calcium silicate, or cellular glass pipe insulation with aluminum jacket which matches existing or surrounding insulation. Paint jacket to suit Base Architectural Plan. The minimum insulation thickness shall be in accordance with the following table:

Table 1 Insulation Thickness for Hot Water Systems

Nominal Pipe Diameter inches (mm)	Mineral Fiber inches (mm)	Calcium Silicate inches (mm)	Cellular Glass inches (mm)
1.00 (25)	1.5 (38)	1.5 (38)	1.5 (38)
1.5 (38)	1.5 (38)	1.5 (38)	1.5 (38)
2.0 (51)	1.5 (38)	1.5 (38)	1.5 (38)
2.5 (64)	1.5 (38)	1.5 (38)	1.5 (38)
3.0 (76)	1.5 (38)	1.5 (38)	1.5 (38)
4.0 (100)	2.0 (51)	2.5 (64)	1.5 (38)
5.0 (125)	2.0 (51)	2.5 (64)	1.5 (38)
6.0 (150)	2.5 (64)	2.5 (64)	1.5 (38)
8.0 (200)	2.5 (64)	2.5 (64)	1.5 (38)
10.0 (250)	2.5 (64)	2.5 (64)	1.5 (38)
12.0 (300)	2.5 (64)	2.5 (64)	1.5 (38)
14.0 (350)	2.5 (64)	2.5 (64)	1.5 (38)
16.0 (400)	2.5 (64)	2.5 (64)	1.5 (38)
18.0 (450)	2.5 (64)	2.5 (64)	1.5 (38)

G304001 1.3 EXPANSION

Compensate for piping expansion by utilizing expansion loops and joints. Provide guided slip or flexible ball type expansion joints.

G304001 1.4 SUPPORTS

MSS SP-58 and MSS SP-69, adjustable supports with insulation protection saddles. Provide stainless steel axles for rollers. Provide support poles with guy wires and hardware.

G304002 OVERHEAD STEAM SYSTEMS

G304002 1.1 PIPING & FITTINGS

G304002 1.1.1 Steam Piping

Steam piping shall be ASTM A 53, Type E (electric-resistance welded, Grade A or B) or Type S (seamless, Grade A or B), black steel. Provide Weight Class STD (Standard) for welding end connections. Provide Weight Class XS (Extra Strong) for threaded end connections. ASTM A 106, Grade

A or B, black steel, Schedule 40 may be used for pipe sizes through 9 inches (250 mm), and minimum pipe wall thickness of 0.35 inches (9.5 mm) for pipe sizes 12 inches (300 mm) and larger for welding end connections. Provide Schedule 80 for threaded end connections.

G304002 1.1.2 Condensate Piping

Condensate piping shall be ASTM A 53, Type E (electric-resistance welded), Grade A or B), or Type S (seamless, Grade A or B); black steel, Weight Class XS (Extra Strong). ASTM A 106, Grade A or B, black steel, Schedule 80 may be used.

G304002 1.2 INSULATION

Fibrous glass, calcium silicate, or cellular glass pipe insulation with aluminum jacket which matches existing or surrounding insulation. Paint jacket to suit Base Architectural Plan. The minimum insulation thickness shall be in accordance with the following tables:

Table 1 Insulation Thickness for Steam Systems

Nominal Pipe Diameter inches (mm)	Fibrous Glass inches (mm)	Calcium Silicate inches (mm)	Cellular Glass inches (mm)
1.00 (25)	3.5 (90)	4.0 (100)	*
1.5 (38)	3.5 (90)	4.0 (100)	*
2.0 (51)	3.5 (90)	4.0 (100)	*
2.5 (64)	3.5 (90)	4.0 (100)	*
3.0 (76)	4.0 (100)	4.5 (115)	*
4.0 (100)	4.0 (100)	4.5 (115)	*
5.0 (125)	4.5 (115)	5.0 (125)	*
6.0 (150)	4.5 (115)	5.0 (125)	*
8.0 (200)	5.0 (125)	6.0 (150)	*
10.0 (250)	5.0 (125)	6.0 (150)	*
12.0 (300)	5.0 (125)	6.0 (150)	*
14.0 (350)	5.0 (125)	6.0 (150)	*
16.0 (400)	5.0 (125)	6.0 (150)	*
18.0 (450)	5.0 (125)	6.0 (150)	*

* Cellular glass pipe insulation having an insulating efficiency not less than that of the specified thickness of calcium silicate may be provided.

Table 2 Insulation Thickness for Condensate Systems

Nominal Pipe Diameter inches (mm)	Mineral Fiber inches (mm)	Fibrous Glass inches (mm)
1.00 (25)	2.5 (64)	*
1.5 (38)	2.5 (64)	*
2.0 (51)	2.5 (64)	*
2.5 (64)	2.5 (64)	*
3.0 (76)	3.0 (76)	*
4.0 (100)	3.0 (76)	*
5.0 (125)	3.5 (90)	*
6.0 (150)	3.5 (90)	*
8.0 (200)	3.5 (90)	*
10.0 (250)	3.5 (90)	*
12.0 (300)	3.5 (90)	*
14.0 (350)	3.5 (90)	*
16.0 (400)	3.5 (90)	*

18.0 (450)	3.5 (90)	*

* Fibrous glass pipe insulation having an insulating efficiency not less than that of the specified thickness of mineral fiber may be provided.

G304002 1.3 EXPANSION

Compensate for piping expansion by utilizing expansion loops and joints. Provide guided slip or flexible ball type expansion joints.

G304002 1.4 SUPPORTS

MSS SP-58 and MSS SP-69, adjustable supports with insulation protection saddles. Provide stainless steel axles for rollers. Provide support poles with guy wires and hardware.

G304003 UNDERGROUND HOT WATER SYSTEMS

G304003 1.1 PIPING & FITTINGS

Direct buried, factory pre-fabricated, pre-insulated, piping systems shall consist of a service pipe with polyurethane insulation and a high-density polyethylene (HDPE) jacket. Provide factory fabricated fittings and components. Field insulation of fittings will not be allowed.

G304003 1.2 INSULATION

The minimum insulation thickness shall be in accordance with the following tables:

Table 1 Insulation Thickness for Drainable/Dryable Systems

Nominal Pipe Diameter inches (mm)	Paroc inches (mm)	Epitherm inches (mm)	Kaylo-10 Thermo-12_Super Caltemp inches (mm)
1.00 (25)	2.0 (51)	2.5 (64)	4.0 (100)
1.5 (38)	2.0 (51)	2.5 (64)	4.0 (100)
2.0 (51)	2.5 (64)	3.5 (90)	4.5 (115)
2.5 (64)	2.5 (64)	3.5 (90)	4.5 (115)
3.0 (76)	3.0 (76)	4.0 (100)	5.0 (125)
4.0 (100)	3.0 (76)	4.0 (100)	5.0 (125)
5.0 (125)	3.0 (76)	4.0 (100)	5.0 (125)
6.0 (150)	3.5 (90)	4.5 (115)	5.5 (140)
8.0 (200)	3.5 (90)	4.5 (115)	5.5 (140)
10.0 (250)	4.0 (100)	5.0 (125)	6.0 (150)
12.0 (300)	4.0 (100)	5.0 (125)	6.0 (150)
14.0 (350)	4.0 (100)	5.0 (125)	6.0 (150)
16.0 (400)	4.0 (100)	5.0 (125)	6.0 (150)
18.0 (450)	4.0 (100)	5.0 (125)	6.0 (150)

Table 2 Insulation Thickness for Water Spread Limiting Systems

Nominal Pipe Diameter inches (mm)	Calcium Silicate inches (mm)	Polyurethane inches (mm)
1.00 (25)	N/A	N/A
1.5 (38)	N/A	N/A
2.0 (51)	N/A	N/A
2.5 (64)	N/A	N/A

3.0 (76)	1.00 (25)	1.23 (31)
4.0 (100)	1.00 (25)	1.23 (31)
5.0 (125)	N/A	N/A
6.0 (150)	1.5 (38)	1.34 (34)
8.0 (200)	2.0 (51)	1.21 (30)
10.0 (250)	2.5 (64)	1.31 (33)
12.0 (300)	2.0 (51)	1.29 (33)
14.0 (350)	N/A	N/A
16.0 (400)	N/A	N/A
18.0 (450)	N/A	N/A

G304003 1.3 UHDS DESIGN

Design and provide direct buried, factory-prefabricated, pre-insulated main hot water piping, including piping in manholes. Asbestos cement or plastic conduit is not acceptable. The UHDS representative shall be certified in writing by the UHDS manufacturer to be technically qualified and experienced in the installation of the system. Provide a Certificate of Satisfactory Operation certifying that at least 3 systems installed by the UHDS manufacturer within the previous 10 years have and are operating satisfactorily for not less than 5 years. The certificate shall include verification information.

G304003 1.4 VALVING

Provide isolation valves on supply and return lines at take-offs for service to each building. Valves shall be located in valve boxes. Valves shall be ASME class 150.

G304003 1.5 EXPANSION

Compensate for piping expansion by utilizing expansion loops.

G304004 UNDERGROUND STEAM DISTRIBUTION SYSTEMS

G304004 1.1 PIPING & FITTINGS

Direct buried, factory pre-fabricated, pre-insulated, steam and condensate piping systems shall consist of a steel service pipe with polyurethane insulation and a high-density polyethylene (HDPE) jacket. Provide factory fabricated fittings and components. Field insulation of fittings will not be allowed.

G304004 1.2 INSULATION

The minimum insulation thickness shall be in accordance with the following tables:

Table 1 Insulation Thickness for Drainable/Dryable Systems

Nominal Pipe Diameter inches (mm)	Paroc inches (mm)	Epitherm inches (mm)	Kaylo-10 Thermo-12_Super Caltemp inches (mm)
1.00 (25)	2.0 (51)	2.5 (64)	4.0 (100)
1.5 (38)	2.0 (51)	2.5 (64)	4.0 (100)
2.0 (51)	2.5 (64)	3.5 (90)	4.5 (115)
2.5 (64)	2.5 (64)	3.5 (90)	4.5 (115)
3.0 (76)	3.0 (76)	4.0 (100)	5.0 (125)
4.0 (100)	3.0 (76)	4.0 (100)	5.0 (125)

5.0 (125)	3.0 (76)	4.0 (100)	5.0 (125)
6.0 (150)	3.5 (90)	4.5 (115)	5.5 (140)
8.0 (200)	3.5 (90)	4.5 (115)	5.5 (140)
10.0 (250)	4.0 (100)	5.0 (125)	6.0 (150)
12.0 (300)	4.0 (100)	5.0 (125)	6.0 (150)
14.0 (350)	4.0 (100)	5.0 (125)	6.0 (150)
16.0 (400)	4.0 (100)	5.0 (125)	6.0 (150)
18.0 (450)	4.0 (100)	5.0 (125)	6.0 (150)

Table 2 Insulation Thickness for Water Spread Limiting Systems

Nominal Pipe Diameter inches (mm)	Calcium Silicate inches (mm)	Polyurethane inches (mm)
1.00 (25)	N/A	N/A
1.5 (38)	N/A	N/A
2.0 (51)	N/A	N/A
2.5 (64)	N/A	N/A
3.0 (76)	1.00 (25)	1.23 (31)
4.0 (100)	1.00 (25)	1.23 (31)
5.0 (125)	N/A	N/A
6.0 (150)	1.5 (38)	1.34 (34)
8.0 (200)	2.0 (51)	1.21 (30)
10.0 (250)	2.5 (64)	1.31 (33)
12.0 (300)	2.0 (51)	1.29 (33)
14.0 (350)	N/A	N/A
16.0 (400)	N/A	N/A
18.0 (450)	N/A	N/A

Table 3 Insulation Thickness for Condensate Return Systems

Nominal Pipe Diameter inches (mm)	Paroc inches (mm)	Epitherm inches (mm)	Kaylo-10 Thermo-12_Super Caltemp inches (mm)
1.00 (25)	2.0 (51)	2.5 (64)	4.0 (100)
1.5 (38)	2.0 (51)	2.5 (64)	4.0 (100)
2.0 (51)	2.5 (64)	3.5 (90)	4.5 (115)
2.5 (64)	2.5 (64)	3.5 (90)	4.5 (115)
3.0 (76)	3.0 (76)	4.0 (100)	5.0 (125)
4.0 (100)	3.0 (76)	4.0 (100)	5.0 (125)
5.0 (125)	3.0 (76)	4.0 (100)	5.0 (125)
6.0 (150)	3.5 (90)	4.5 (115)	5.5 (140)
8.0 (200)	3.5 (90)	4.5 (115)	5.5 (140)
10.0 (250)	4.0 (100)	5.0 (125)	6.0 (150)
12.0 (300)	4.0 (100)	5.0 (125)	6.0 (150)
14.0 (350)	4.0 (100)	5.0 (125)	6.0 (150)
16.0 (400)	4.0 (100)	5.0 (125)	6.0 (150)
18.0 (450)	4.0 (100)	5.0 (125)	6.0 (150)

G304004 1.3 UHDS DESIGN

Design and provide direct buried, factory-prefabricated, pre-insulated main steam and condensate piping in separate conduits and including piping in manholes. Asbestos cement or plastic conduit is not acceptable. The UHDS representative shall be certified in writing by the UHDS manufacturer to be technically qualified and experienced in the installation of the system. Provide a Certificate of Satisfactory Operation certifying that at least 3

systems installed by the UHDS manufacturer within the previous 10 years have and are operating satisfactorily for not less than 5 years. The certificate shall include verification information.

G303004 1.4 VALVING

Provide isolation valves on supply and return lines at take-offs for service to each building. Valves shall be located in manholes. Valves shall be ASME class 150.

G304004 1.5 EXPANSION

Compensate for piping expansion by utilizing expansion loops. Locate anchors outside manholes.

G304005 REINFORCED CONCRETE MANHOLES & VALVE BOXES

G304005 1.1 MANHOLE CONSTRUCTION

Manholes shall be shall be constructed of reinforced, 3000 psi (206.8 bar) concrete and shall extend a minimum of 6 inches (300 mm) above grade. Depth shall be as required to maintain proper pipe slopes. Construct manhole floor and sides in one monolithic pour. Provide ladder. Ladder shall be steel with non-slip surfaces and anchored to the wall. Manhole floor and walls shall be watertight. Provide sleeves or core drill openings for pipes with modular mechanical seals. Provide sump pit for pump.

G304005 1.2 VALVE BOX CONSTRUCTION

Cast-iron or ductile-iron box of a suitable size. Provide cast-iron or ductile-iron cover for the box with word(s) describing the utility cast on the cover.

G304005 1.3 MANHOLE SUMP PUMPS

Vertical sump pump. Operating temperature design must be 195 degrees F (93 degrees C) minimum. Provide with 2-pole float control.

G304090 OTHER HEATING DISTRIBUTION

G304090 1.1 WARNING & IDENTIFICATION TAPE

Polyethylene plastic tape manufactured specifically for warning and identifying buried utility lines.

G304090 1.2 CORROSION PROTECTION

Provide a cathodic protection system for the underground piping system. System shall be designed by a National Association of Corrosion Engineers (NACE) certified Cathodic Protection Engineer. The corrosion engineer shall obtain soil data and existing system conditions. Corrosion engineer shall supervise, inspect and test the installation and performance of the cathodic protection system. Test stations shall be post mounted and placed at the manhole or nearby building. Test stations shall be located at each end of each cathodically protected section.

G3050 COOLING DISTRIBUTION

G305001 OVERHEAD COOLING SYSTEMS

G305001 1.1 PIPING & FITTINGS

G305001 1.1.1 Chilled and Condenser Water Piping

Chilled and condenser water piping shall be electric resistance welded or seamless Schedule 40 black steel pipe conforming to ASTM A 53. Piping 4 inch (100 mm) and smaller may be ASTM B 88 Type K or L copper.

G305001 1.1.2 Steel Pipe Fittings

For piping 2 inch (50 mm) and smaller, provide ANSI/ASME B16.3 malleable iron screwed fittings or ASME B16.11 socket welding (Class 3000) or threaded type (Class 2000). Provide ASME/ANSI B16.9 butt-welding fittings or ASME/ANSI B16.5 flanged type for piping 2-1/2 inch (63 mm) and larger. Grooved joint pipe coupling systems of appropriate pressure rating are acceptable in lieu of welded or screwed fittings.

G305001 1.1.3 Copper Fittings

Provide ANSI B16.18 cast bronze solder joint type or ASME/ANSI B16.22 wrought copper solder joint type.

G305001 1.2 INSULATION

Mineral fiber, Urethane, cellular glass, Faced Phenolic Foam, or Flexible Cellular pipe insulation with aluminum jacket in accordance with ESR Section G30. The minimum insulation thickness shall be in accordance with the following table:

Table 1 Insulation Thickness for Cold Water Systems

Nominal Pipe Diameter inches (mm)	Mineral Fiber inches (mm)	Urethane inches (mm)	Cellular Glass inches (mm)	Faced Phenolic Foam inches (mm)	Flexible Cellular inches (mm)
1.00 (25)	1.00 (25)	0.75 (19)	1.5 (38)	1.00 (25)	0.75 (19)
1.5 (38)	1.00 (25)	0.75 (19)	1.5 (38)	1.00 (25)	0.75 (19)
2.0 (51)	1.00 (25)	0.75 (19)	1.5 (38)	1.00 (25)	0.75 (19)
2.5 (64)	1.00 (25)	0.75 (19)	1.5 (38)	1.00 (25)	0.75 (19)
3.0 (76)	1.00 (25)	0.75 (19)	1.5 (38)	1.00 (25)	0.75 (19)
4.0 (100)	1.5 (38)	0.75 (19)	1.5 (38)	1.00 (25)	0.75 (19)
5.0 (125)	1.5 (38)	0.75 (19)	1.5 (38)	1.00 (25)	0.75 (19)
6.0 (150)	1.5 (38)	1.00 (25)	1.5 (38)	1.5 (38)	1.00 (25)
8.0 (200)	1.5 (38)	1.00 (25)	1.5 (38)	1.5 (38)	1.00 (25)
10.0 (250)	1.5 (38)	1.00 (25)	1.5 (38)	1.5 (38)	1.00 (25)
12.0 (300)	1.5 (38)	1.00 (25)	1.5 (38)	1.5 (38)	1.00 (25)
14.0 (350)	1.5 (38)	1.00 (25)	1.5 (38)	1.5 (38)	1.00 (25)
16.0 (400)	1.5 (38)	1.00 (25)	1.5 (38)	1.5 (38)	1.00 (25)
18.0 (450)	1.5 (38)	1.00 (25)	1.5 (38)	1.5 (38)	1.00 (25)

G305001 1.3 SUPPORTS

Provide MSS SP-58 and MSS SP-69, adjustable supports with insulation protection saddles. Provide stainless steel axles for rollers. Provide support poles with guy wires and hardware.

G305001 1.4 EXPANSION

Compensate for piping expansion by utilizing expansion loops and joints. Provide guided slip or flexible ball type expansion joints.

G305002 UNDERGROUND COOLING SYSTEMS

G305002 1.1 PIPING & FITTINGS

Direct buried, factory-prefabricated, pre-insulated, chilled water piping systems. All fittings and accessories shall be designed and factory-fabricated to prevent moisture from entering into the system. Backfill and overall installation shall meet the requirements of the piping system manufacturer.

G305002 1.2 VALVES

Provide isolation valves on supply and return lines at take-offs for service to each building. Valves shall be located in valve boxes.

G305090 OTHER COOLING DISTRIBUTION

G305090 1.1 EXPANSION

Compensate for piping expansion by utilizing expansion loops. Locate anchors outside manholes.

G305090 1.2 WARNING & IDENTIFICATION TAPE

Polyethylene plastic tape manufactured specifically for warning and identifying buried utility lines.

G305090 1.3 CORROSION PROTECTION

Provide a cathodic protection system for the underground chilled water and condenser water piping system. System shall be designed by a National Association of Corrosion Engineers (NACE) certified Cathodic Protection Engineer. The corrosion engineer shall obtain soil data and existing system conditions. Corrosion engineer shall supervise, inspect and test the installation and performance of the cathodic protection system. Test stations shall be post mounted and placed at the manhole or nearby building. Test stations shall be located at each end of each cathodically protected section.

G3060 FUEL DISTRIBUTION

G306001 LIQUID FUEL DISTRIBUTION PIPING

G306001 1.1 GASOLINE/DIESEL

Fuel piping shall be ASTM A 53, Type E (electric-resistance welded, Grade A or B) or Type S (seamless, Grade A or B), black steel or API SPEC 5L, seamless, submerged-arc weld or gas metal-arc weld, Grade B, black steel. Provide Weight Class STD (Standard) for welding end connections. Provide Weight Class XS (Extra Strong) for threaded end connections.

G306002 LIQUID FUEL STORAGE TANKS

G306002 1.1 STORAGE TANKS

Aboveground, concrete encased or double wall in accordance with UL 142 and UL 2085 with secondary containment and leak monitoring with a capacity to meet the system requirements. Provide with overfill/spill containment, overfill protection and vents.

G306002 1.2 FUEL PUMPS

Fuel pumps shall comply with NEMA MG 1, NFPA 70, and be designed for use with hydrocarbon fuels and working pressure of 275 psig (1896 kilopascals) at 100 degrees F (38 degrees C).

G306002 1.3 FUEL METERS

Continuous duty, positive displacement type, with electronic thermal compensation capability, suitable for outdoor installation, and designed for use with hydrocarbon fuels and working pressure of 275 psig (1896 kilopascals) at 100 degrees F (38 degrees C).

G306003 LIQUID FUEL DISPENSING TANKS

The same as storage tanks except, include tank mounted dispenser with filter, vacuum breaker, safety breakaway, hose and nozzle.

G306004 GAS DISTRIBUTION PIPING (NATURAL & PROPANE)

G306004 1.1 STEEL PIPE

Gas piping shall be ASTM A 53, Type E (electric-resistance welded, Grade A or B) or Type S (seamless, Grade A or B), black steel. Provide Weight Class STD (Standard) for welding end connections. Provide Weight Class XS (Extra Strong) for threaded end connections.

G306004 1.2 POLYETHYLENE (PE)

PE pipe and heat fusion fittings shall conform to ASTM D 2513, Grade PE2406 or PE3408.

G306005 GAS STORAGE TANKS

G306005 1.1 PROPANE STORAGE TANKS

ASME labeled tank in accordance with NFPA 58 with a capacity to meet the system requirements.

G306006 OTHER GAS DISTRIBUTION

G306006 1.1 WARNING & IDENTIFICATION TAPE

Detectable aluminum foil, plastic backed tape or detectable magnetic plastic tape manufactured specifically for warning and identifying buried piping.

-- End of Section --

SECTION G40

SITE ELECTRICAL UTILITIES
8/08

G40 GENERAL

G40 1.1 NARRATIVE

This section covers installations exterior to the facility up to the five foot line. See PTS Section D50, *Electrical*, for continuation of systems into the building.

G40 1.2 ELECTRICAL DESIGN GUIDANCE

Provide the design and installation in accordance with the following references. This Performance Technical Specification (PTS) adds clarification to the fundamental requirements contained in the following Government Standards. The general requirements of this PTS section are located in PTS Section Z10, *General Performance Technical Specification*.

When all product Quality Control information is included in the Unified Facility Criteria (UFC) and there are requirement options identified in the ESR, then the Uniformat Level 4 titles (and possible subtitles) are included without additional verbiage. One example of this is G401008, GROUNDING SYSTEMS.

G40 1.2.1 Government Standards

UNITED FACILITIES CRITERIA (UFC)

UFC 3-500-10N, *Electrical Engineering*

UFC 3-570-02N, *Electrical Engineering Cathodic Protection*

UNIFIED FACILITIES GUIDE SPECIFICATIONS (UFGS)

UFGS 26 11 13.00 20, *Primary Unit Substation*

UFGS 26 11 16, *Secondary Unit Substations*

UFGS 26 12 19.10, *Three-Phase Pad-Mounted Transformers*

UFGS 26 12 19.20, *Single-Phase Pad-Mounted Transformers*

UFGS 26 13 00.00 20, *SF6 Insulated Pad-Mounted Switchgear*

UFGS 26 23 00, *Switchboards and Switchgear*

UFGS 33 71 01.00 20, *Overhead Transmission and Distribution*

G40 1.3 QUALITY ASSURANCE

Qualifications, certifications, and Test Plans indicated herein shall be submitted 45 calendar days prior to the expected date of execution. Notify

the Contracting Officer 14 calendar days prior to all testing. Submit test results within 7 calendar days of completion of testing.

The Designer of Record is responsible for approving the submittals listed below.

G40 1.3.1 Qualified Testing Organization

Contractor shall engage the services of a qualified testing organization to provide inspection, testing, calibration, and adjustment of the electrical distribution system and equipment listed in paragraph entitled "Acceptance Tests and Inspections" herein. Organization shall be independent of the supplier, manufacturer, and installer of the equipment. The organization shall be a first tier subcontractor.

a. Submit name and qualifications of organization. Organization shall have been regularly engaged in the testing of electrical materials, devices, installations, and systems for a minimum of 5 years. The organization shall have a calibration program, and test instruments used shall be calibrated in accordance with NETA ATS.

b. Submit name and qualifications of the lead engineering technician performing the required testing services. Include a list of three comparable jobs performed by the technician with specific names and telephone numbers for reference. Testing, inspection, calibration, and adjustments shall be performed by an engineering technician, certified by NETA or the National Institute for Certification in Engineering Technologies (NICET) with a minimum of 5 years' experience inspecting, testing, and calibrating electrical distribution and generation equipment, systems, and devices.

G40 1.3.2 NEC Qualified Worker

Provide in accordance with NFPA 70. Qualified Workers shall be allowed to be assisted by helpers on a 1 to 1 ratio, provided such helpers are registered in recognized apprenticeship programs. Submit a certification confirming NEC Qualified Worker requirements.

G40 1.3.3 Qualified Medium Voltage Electrician

All workers on medium voltage electrical crews shall have 5 years experience working medium voltage systems on similar projects involving the same or higher voltage.

G40 1.3.4 Qualified Cable Splicer (Medium Voltage Cable)

Certification shall include the training, and experience of the individual on the specific type and classification of medium voltage cable to be provided under this contract.

In order to establish the cable splicer’s competency, the Contractor shall be required to submit the following 30 calendar days prior to commencement of the splice/termination:

a. Documentation to verify that the individual has completed a splice and or termination of the type to be installed under this contract.

b. Documentation that said splice/termination has been tested and passed in accordance with NETA ATS requirements. Test results shall be included.

c. A statement of the number of years in which the individual has been splicing/terminating medium voltage cable.

G40 1.3.5 Qualified Cable Splicer (Telecommunications)

Certification shall include the training, and experience of the individual on specific type and classification of telecommunications cable to be provided under this contract.

G40 1.3.6 Qualified Cable Installer and Splicer (Fiber Optic Cable)

Certification shall include the training, and experience of the individual on specific type and classification of Fiber Optic media to be provided under this contract.

G40 1.3.7 Qualified Fiber Optic (FO) Cable Manufacturer

The FO media manufacturer shall have a minimum of 3 years experience in the manufacturing, assembly, and factory testing of FO media that complies with RUS REA Bull 1753F-601 (PE-90). Manufacturer shall provide a list of customers with 3 years of maintenance logs documenting experience with government customers.

G40 1.3.8 Material Standards

Ensure service support and provide manufacturer’s nameplate in accordance with PTS Section Z10, *General Performance Technical Specification*.

G40 1.3.8.1 Warning Labels

Each enclosure of electrical equipment, including substations, pad-mounted transformers, pad-mounted switches, pad-mounted sectionalizing termination cabinets, and switchgear, shall have a warning label identifying the enclosure as 1) containing energized electrical equipment and 2) an arc flash hazard.

G40 1.3.9 Factory Testing

The Government reserves the right to witness all factory testing. The manufacturer shall have a calibration program that assures that all applicable test instruments are maintained within rated accuracy.

G40 1.3.10 Electrical System Startup and Testing

Submit test plans for approval. The test plans shall be tailored to the systems provided.

The test plan shall list make and model and provide functional description of the test instruments and accessories and shall describe the setup of the tests to be conducted. Test instruments shall be capable of measuring and recording or displaying test data at a higher resolution and greater accuracy than specified for the equipment's performance.

G40 1.3.10.1 Factory Trained Engineer

Provide a factory trained engineer to supervise start-up and testing as required in referenced specifications.

G40 1.3.10.2 Performance Verification Testing

The Contractor shall show by demonstration in service that all circuits and devices are in operating condition. Tests shall be such that each item of control equipment will function not less than five times. The Contractor shall provide all necessary test equipment, tools, fuel, load banks, labor, and materials for testing. As a minimum, all systems shall be tested in accordance with manufacturer's recommendations. Additional testing requirements for the various systems are described with those systems, hereinafter. The Contractor shall assure that all applicable test instruments are maintained within rated accuracy. Dated calibration labels shall be visible on all test equipment.

Submit a separate electrical field test plan in accordance with manufacturer's recommendations and that conforms to NETA ATS for each piece of Electrical Distribution Equipment and System requiring Performance Verification Testing.

The following items identify specific test requirements. Additional test requirements are contained in the applicable UFGS.

a. Cable – Test cable in accordance with the manufacturer's recommendations and NETA ATS. Adhere to precautions and limits as specified in the applicable NEMA/ICEA Standard for the specific cable.

b. Grounding - Test ground systems in accordance with the manufacturer's recommendations and NETA ATS.

c. Site Lighting - Contractor's Quality Control (CQC) representative shall perform a field survey of site lighting systems in accordance with IESNA for acceptance. Show that the lighting system operates in accordance with the user's requirements and is in accordance with designed levels. Provide certification that the measured lighting levels conform to the design requirements.

d. Telecommunications wiring - Test all cables in accordance with industry standards.

G40 1.3.10.3 Acceptance Tests and Inspections

The Qualified Testing Organization shall provide the Acceptance Tests and Inspections test plan and procedures and perform the acceptance tests and inspections. Test methods, procedures, and test values shall be performed and evaluated in accordance with NETA ATS, the manufacturer's recommendations, and paragraph entitled "Field Quality Control" of each applicable specification section. Tests identified as optional in NETA ATS are not required unless otherwise specified. Equipment shall be placed in service only after completion of required tests and evaluation of the test results have been completed. Contractor shall supply to the testing organization complete sets of shop drawings, settings of adjustable devices, and other information necessary for an accurate test and inspection of the system prior to the performance of any final testing.

Specific test requirements are contained in the UFGS for equipment.

G40 1.4 DESIGN SUBMITTALS

Design Submittals shall be in accordance with PTS Section Z10, *General Performance Technical Specifications*, UFGS Section 01 33 10.05 20, *Design Submittal Procedures,* UFC 1-300-09N, *Design Procedures,* and UFC 3-500-10N, *Electrical Engineering*.

In addition, UFGS sections listed below or in the body of the PTS text are to be used by the Designer of Record (DOR) as a part of the design submittal. If the UFGS products or systems are applicable to the project, the DOR shall edit these referenced UFGS sections and submit them as a part of the design submittal specification. Edit the specification sections in accordance with the limitations stated in PTS Section Z10, *General Performance Technical Specifications*.

UFGS 26 11 13.00 20, *Primary Unit Substation*

UFGS 26 11 16, *Secondary Unit Substations*

UFGS 26 12 19.10, *Three-Phase Pad-Mounted Transformers*

UFGS 26 12 19.20, *Single-Phase Pad-Mounted Transformers*

UFGS 26 13 00.00 20, *SF6 Insulated Pad-Mounted Switch Gear*

UFGS 26 23 00, *Switchboards and Switchgear*

UFGS 33 71 01.00 20, *Overhead Transmission and Distribution*

G40 1.5 CONSTRUCTION SUBMITTALS

Submit construction submittals in accordance with PTS Section Z10, *General Performance Technical Specifications*. In addition to the PTS Section Z10 requirements, the Designer of Record (DOR) shall approve the following construction submittals as a minimum:

OMSI Information for Electrical Equipment (if OMSI Manual for the entire project is not already required); all “G” item submittals listed in the submittals of the specifications sections identified in the Design Submittals paragraph above; and all “G” item submittals listed

in Government Surveillance UFGS Section 01 33 00.05 20, *Construction Submittal Procedures.*

Provide certification that all adjustable protective device settings have been set in accordance with the coordination study for the as-built equipment and configuration.

G4010 ELECTRICAL DISTRIBUTION

G401001 SUBSTATIONS

When secondary unit substations are required, the Designer of Record shall utilize UFGS Section 26 11 16, *Secondary Unit Substation*, and UFGS Section 26 23 00, *Switchboards and Switchgear*, for the project specification, and shall submit the edited specification section as a part of the design submittal for the project.

G401002 TRANSFORMERS

When transformers are required, the Designer of Record shall utilize UFGS Section 26 12 19.10, *Three-Phase Pad Mounted Transformers*, UFGS Section 26 12 19.20, *Single-Phase Pad Mounted Transformers*, or UFGS Section 33 71 01.00 20, *Overhead Transmission and Distribution*, for the project specification, and shall submit the edited specification section as a part of the design submittal for the project.

G401003 SWITCHES, CONTROLS AND DEVICES

When switches or control devices are required, the Designer of Record shall utilize UFGS Section 26 13 00.00 20, *SF6 Insulated Pad Mounted Switchgear*, or UFGS Section 33 71 01.00 20, *Overhead Transmission and Distribution*, for the project specification, and shall submit the edited specification section as a part of the design submittal for the project.

G401004 OVERHEAD ELECTRIC CONDUCTORS

Power line conductors shall be strung in accordance with manufacturer’s standard sag and tension recommendations.

G401005 TOWERS, POLES, CROSSARMS AND INSULATORS

Wood poles shall comply with ANSI 05.1 and RUS 1728F-700. Pressure treat poles in accordance with AWPA C1 and AWPA C4 as referenced in RUS 1728F-700. The quality of each pole shall be ensured with “WQC” (wood quality control) brand on each piece or by an approved inspection agency report. Do not use creosote treated poles, lodgepole pine, and western larch pine poles.

Concrete poles shall comply with ANSI loadings for distribution poles.

The size of poles required, class, height and other data, shall be determined by the designer of record to meet requirements of the pole line. Crossarms shall be wood, steel or fiberglass in accordance with industry and local standards. Insulators, cutouts and associated equipment shall be determined by the Designer of Record to meet system requirements.

G401006 UNDERGROUND ELECTRIC CONDUCTORS

Route underground cables to minimize splices. Cable pulling tensions shall not exceed the maximum pulling tension recommended by the cable manufacturer. Medium voltage cable termination shall be suitable for the location installed and meet IEEE Std. 48 Class 1 requirements.

G401007 DUCTBANKS, MANHOLES, HANDHOLES AND RACEWAYS

Concrete manholes and handholes shall be standard type pre-cast concrete. Composite/Fiberglass handholes shall be polymer concrete reinforced with a heavy weave fiberglass reinforcing as indicated. Load ratings of manholes and handholes shall be suitable for the location installed.

G401008 GROUNDING SYSTEMS

G401009 METERING

G401010 CATHODIC PROTECTION SYSTEMS

Cathodic protection systems shall be in accordance with UFC 3-570-02N.

G401011 EQUIPMENT REQUIREMENTS FOR COASTAL AND HIGH HUMIDITY AREAS

G4020 SITE LIGHTING

G402001 EXTERIOR LIGHTING FIXTURES AND CONTROLS

Maintained mean area lighting levels shall be 6 lux (0.5 fc). Lighting uniformity shall be maintained with the following average to minimum (avg/min) uniformity ratios:

a. Highway Lighting, 3:1

b. Secondary Street Lighting, 6:1

c. Residential Streets, 6:1

d. Area And Parking Lighting, 6:1

G402002 SPECIAL SECURITY LIGHTING SYSTEM

G402003 OTHER AREA LIGHTING

G402004 LIGHTING POLES

Poles shall meet Uniform Building Code for street lighting poles, and AASHTO loadings for highway and sports lighting poles taking into account the effective projected areas of the luminaries provided. Poles shall be direct set or anchor-base type designed for use with underground supply conductors.

G402005 UNDERGROUND ELECTRIC CONDUCTORS

Provide in accordance with Paragraph G401006.

G402006 DUCTBANKS, MANHOLES AND HANDHOLES

Handholes and underground conduits for site lighting shall be in accordance with Paragraph G401007.

G402007 GROUNDING SYSTEMS

G4030 SITE COMMUNICATION AND SECURITY

G403001 TELECOMMUNICATIONS SYSTEMS

G403002 CABLE TV SYSTEMS (CATV)

G403003 CABLES AND WIRING

Provide underground copper cable pair in accordance with RUS 345-67. Provide aerial cable in accordance with RUS 345-67 except that it shall be suitable for aerial installation and shall be Figure 8 distribution wire with 6,000 pound (26,700 N) Class A galvanized steel or 6,000 pound (26,700 N) aluminum-clad steel strand. Screen-compartmental core cable shall be filled cable meeting the requirements of RUS 345-67. Fiber optic media shall meet all performance requirements of EIA/TIA-568-A and the physical requirements of ICEA S-87-640 and EIA/TIA-598-A.

G403004 DUCTBANKS, MANHOLES AND HANDHOLES

Provide in accordance with paragraph G401007.

G403005 TOWERS, POLES AND STANDS

Provide in accordance with paragraph G401005.

G403006 TV CAMERAS AND MONITORS

G403007 ELECTRONIC SECURITY SYSTEM (ESS)

G403008 OTHER COMMUNICATION AND ALARM

G403009 GROUNDING SYSTEMS

G4090 OTHER ELECTRICAL UTILITIES

--End of Section--

SECTION H10

WATERFRONT STRUCTURES
4/08

H10 GENERAL

H10 1.1 NARRATIVE

This Section must be used in conjunction with all parts of the Design Build (D/B) Request for Proposal (RFP) to determine the full requirements of this solicitation.

This Section includes the requirements for the design and construction of waterfront structure, described in ESR H10, *Waterfront Structures*, of Part 3 and as identified on the RFP drawings provided in Part 6.

H10 1.2 WATERFRONT STRUCTURE DESIGN GUIDANCE

Provide the design and installation in accordance with the following references. This Performance Technical Specification (PTS) adds clarification to the fundamental requirements contained in the following Government Standards. The general requirements of this PTS Section are located in PTS Section Z10, *General Performance Technical Specification*.

H10 1.2.1 Government Standards

UNIFIED FACILITIES CRITERIA (UFC)

UFC 3-220-01N, *Geotechnical Engineering Procedures for Foundation Design of Buildings and Structures*

UFC 3-310-01, *Structural Load Data*

UFC 4-151-10, *General Criteria for Waterfront Construction*

UFC 4-152-01, *Design: Piers And Wharves*

UFC 4-152-07N, *Design: Small Craft Berthing Facilities*

UFC 4-159-03, *Design: Moorings*

UNIFIED FACILITIES GUIDE SPECIFICATIONS (UFGS)

UFGS Section 03 01 30.71, *Concrete Rehabilitation*

UFGS Section 03 31 29, *Marine Concrete*

UFGS Section 09 97 13.26, *Coating of Steel Waterfront Structures*

UFGS Section 09 97 13.27, *Exterior Coating of Steel Structures*

UFGS Section 09 97 13.28, *Protection of Buried Steel Piping and Steel Bulkhead Tie Rods*

UFGS Section 31 23 00.00 20, *Excavation and Fill*

UFGS Section 31 62 13.20, *Precast/Prestressed Concrete Piles*

UFGS Section 31 62 13.24, *Prestressed Concrete Cylinder Piles*

UFGS Section 32 17 23.00 20, *Pavement Markings*

UFGS Section 35 59 13.13, *Prestressed Concrete Fender Piling*

UFGS Section 35 59 13.14 20, *Polymeric Fender Piles*

UFGS Section 35 59 13.16, *Marine Fenders*

H10 1.2.2 General Requirements

H10 1.2.2.1 Subsurface Soils Information and Geotechnical Report

Any information presented in Part 6 of the RFP with regard to soil sampling and laboratory testing is for the Contractor’s information only and is not guaranteed to fully represent all subsurface conditions. Contractor shall perform, at his expense, such subsurface exploration, investigation, testing, and analysis as his Designer of Record deems necessary for the design and construction of the foundation system. Contractor shall assemble all boring logs and present them in the design plans.

H10 1.2.2.2 Earthwork

The Designer of Record shall utilize UFGS Section 31 23 00.00 20 , *Excavation and Fill*, for the project specification.

H10 1.2.2.3 Marine Concrete

The Designer of Record shall utilize UFGS Section 03 31 29, *Marine Concrete*, including the use of epoxy coated rebar, for the project specification covering concrete components used in waterfront superstructure, substructure, deck and mooring and berthing systems, unless noted otherwise. The maximum water-cement ratio and minimum compressive strength shall be 0.40 and 5000 psi (35 MPa) respectively.

H10 1.2.2.4 Concrete Cover

Concrete components submerged in water or subjected to water spray shall have a minimum of 3 inches (75 mm) concrete cover over reinforcing steel or prestressing steel.

H10 1.2.2.5 Coating of Steel Waterfront Structures

The Designer of Record shall utilize UFGS Section 09 97 13.26, *Coating of Steel Waterfront Structures*, for the project specification covering coating of galvanized and non-galvanized steel structure elements such as piles, sheet piles, fender piles, power booms, power mounds, mooring hardware, and other miscellaneous steel items located on the waterfront structure and exposed to water

immersion, water splash and spray, high humidity or tropical environmental condition.

Coating of miscellaneous steel items located on the waterfront structure and not exposed to water immersion, water splash and spray, high humidity or tropical environmental condition can follow UFGS Section 09 97 13.27, *Exterior Coating of Steel Structures*.

H10 1.2.2.6 Stainless Steel

Stainless steel when used shall be Type 316 or 316L.

H10 1.2.2.7 Dewatering

Dewatering requirements and methods shall be established by the Contractor's Structural/Geotechnical Engineers, based on his subsurface exploration and investigation considering soil conditions and local subsurface waters and surface water, including rainfall. Any dewatering discharge will require a NPDES permit.

H10 1.2.2.8 Permit and Environmental Control

Waterfront structure work shall meet the permit and environmental control requirements of Section 01 57 19.00 20, *Temporary Environmental Controls*, in Part 2. In-water construction shall not commence until the required USACOE permits are obtained and shall meet the conditions stipulated in the USACOE permits.

H10 1.2.2.9 Repair and Rehabilitation

Repair and rehabilitation of waterfront structure, if required, shall cover concrete spalls, delaminations and cracks and steel corrosion. Concrete repair and rehabilitation shall follow the requirements of UFGS Section 03 01 30.71, *Concrete Rehabilitation*. Detailed existing condition inspection shall be done during the design phase. Inspection shall be performed by certified concrete technicians or structural engineers to identify and document the size and locations of cracks, spalls, delaminations, corrosion and other deteriorations on the existing structure. Underwater inspection shall be performed by qualified divers with similar qualifications as the underwater inspectors used for Underwater Quality Control (UWOC) described in the "Underwater Inspection" paragraph of this PTS Section.

H10 1.3 QUALITY ASSURANCE

Qualifications, certifications, and Test Plans indicated herein shall be submitted 45 calendar days prior to the expected date of execution. Notify the Contracting Officer 14 calendar days prior to all testing. Submit test results within 7 calendar days of completion of testing.

The Designer of Record is responsible for approving the submittals listed below.

H10 1.3.1 Earthwork

Perform quality assurance for earthwork in accordance with IBC Chapter 17 and UFGS Section 31 23 00.00 20, *Excavation and Fill*. A registered Professional Engineer shall provide inspection of excavations and soil/groundwater conditions throughout construction. The Engineer shall be responsible for performing pre-construction and periodic site visits throughout construction to assess site conditions. The Engineer, with the concurrence of the Contractor and the Contracting Officer, shall update the excavation, sheeting, and dewatering plans as construction progresses to reflect actual site conditions and shall submit the updated plan and a written report (with professional stamp) at least monthly informing the Contractor and the Contracting Officer of the status of the plan and an accounting of Contractor adherence to the plan; specifically addressing any present or potential problems. The Engineer shall be available to meet with the Contracting Officer at any time throughout the contract duration. The contractor shall bear all costs of the Engineer.

H10 1.3.2 Piles

Perform quality assurance for pile construction in accordance with UFC 3-220-01N. Pile installation procedures and installed piles shall be inspected and found to be in compliance with these specifications prior to acceptance of the work. Concrete piles, if used for the project and inspected to contain cracks completely around the piles, shall be replaced at no additional cost to the Government. Refer to the “Underwater Inspection” paragraph of this PTS Section for special inspection requirements.

Install indicator test piles as directed by the Contractor’s Structural/Geotechnical Engineer. The load capacity of piles, as determined by pile driving formulae or geotechnical analysis, shall be verified by load tests or by dynamic pile analyzer methods. Test pile installation procedures shall be as directed by the Contractor’s Structural/Geotechnical Engineer. Results of the indicator test pile program and final pile installation criteria shall be submitted to the Contracting Officer prior to installation of the production piles.

H10 1.3.3 Underwater Inspection

Contractor’s Underwater Quality Control (UWQC) Team shall perform underwater surveillance and inspection of all under water construction. The UWQC lead diver shall be thoroughly familiar with the design plans and specifications to sufficiently understand the engineering aspects of the underwater construction and to be able to recognize and document potential problem areas such as improperly constructed or defective work. A report including photographs and/or videos shall be prepared and submitted with the QC report after each dive. The report shall include a description of all improperly constructed or defective areas and conditions. Frequency of underwater surveillance and inspection shall be after substructure installation and prior to superstructure and deck construction, after project construction is completed, and after all repairs to improperly constructed or defective areas and conditions have been completed. In addition to underwater conditions, survey and inspect above water, below deck conditions.

Contractor shall repair and correct all improperly constructed or defective areas and conditions identified in the report at no additional cost to the Government. Prior to performing any work, submit to the Contracting Officer for approval the repair or corrective actions to be taken including plans and specifications.

H10 1.3.4 Marine Concrete

Quality Assurance requirements for Marine Concrete shall be in accordance with the UFGS Section 03 31 29, *Marine Concrete*.

If project is located outside of the mainland U.S. and Hawaii, Contractor is advised that the Chloride Ion Test required per UFGS Section 03 31 29, *Marine Concrete*, is a long lead item (the test will take at least 60 days) and it may be necessary to have the test done in the U.S mainland.

H10 1.4 DESIGN SUBMITTALS

Design submittals shall be in accordance with PTS Section Z10, *General Performance Technical Specification*, Section 01 33 10.05 20, *Design Submittal Procedures*, UFC 1-300-09N, *Design Procedures*, UFC 3-300-10N, *Structural Engineering*, and UFC 4-152-01, *Design: Piers and Wharves*.

Additional design submittals for waterfront structure construction are as follows:

Concept Design Submittal:

Conceptual substructure, superstructure and deck layout and structural framing plans

Concept substructure and slope and wave protection layout plans

Concept design report to describe the system and justification of the selections. The submittal shall include a detailed description including sketches of all proposed in-water construction adequate for the USACOE permit application.

Design Development Submittal:

Existing condition inspection report

Preliminary substructure, superstructure and deck layout and structural framing plans with substructure locations

Preliminary substructure and slope and wave protection plans with locations of facilities and type of construction finalized

Preliminary substructure sections and details with substructure sizes finalized

Preliminary slope and wave protection details

Preliminary calculations to demonstrate that the basis framing and sizing of the major substructure and superstructure elements meet the performance requirements specified in the RFP.

Preliminary geotechnical report(s) including recommendation on test pile program

100% and Final Design Submittal:

Final plans, sections and details

Final design calculations

Final geotechnical report(s)

H10 1.5 CONSTRUCTION SUBMITTALS

The general requirements of this PTS Section are located in PTS Section Z10, *General Performance Technical Specification*. Construction submittals shall be in accordance with Section 01 33 00.05 20, *Construction Submittal Procedures*.

In addition to the Government Approval items listed in Section 01 33 00.05 20, the following waterfront structure related critical items shall be submitted for Government Approval:

Marine Concrete Mix Design

Pile Load Test Reports

Fender Product Data

In additional to the Government Surveillance items listed in Section 01 33 00.05 20, the following waterfront structure related items shall be submitted for Government Surveillance:

Piling Shop Drawings

Fender Piles shop Drawings

Fender Panels Shop Drawings

Mooring Hardware Shop Drawings

H1010 SUBSTRUCTURE

H101001 PILE FOUNDATIONS

Provide foundations in compliance with the requirements of this RFP and in accordance with the recommendations of the Contractor’s Geotechnical/ Structural Engineers.

H101001 1.1 PILES

H101001 1.1.1 Restrictions

Restrictions are listed in the ”Substructure” paragraph in ESR H10, *Waterfront Structures*, of Part 3.

H101001 1.1.2 Driving Equipment

Install piles to the required tip elevation or capacity with a pile hammer of sufficient weight and energy to suitably drive the piles without damage. Operate hammer at manufacturer’s recommended speed, and drive piles without interruption using the appropriate equipment as recommended by the Contractor’s Geotechnical Engineer.

a. Drive production piles with the same hammer, cap block and cushion materials, and use the same operating conditions, including pre-drilling (if allowed per this RFP), as indicator test piles.

b. Pile driving equipment shall match the equipment assumptions on which the pile driving formulae used to determine blow counts are based.

H101001 1.1.3 Installation Tolerances

a. Locate pile butts not more than 4 in (100 mm) from the location indicated at cutoff elevation. Manipulation of the piles is not permitted. In addition to the stated tolerances, the clear distance between the heads of piles and the edges of pile caps shall be determined by the Contractor’s Structural Engineer but no less than a minimum of 5 in (125 mm).

b. Locate top of sheet piles at cutoff elevation within 1/2 inch (12 mm) horizontally and 2 inch (50 mm) vertical of the location indicated. Manipulation of the piles is not permitted.

c. A variation of not more than 2 percent from the vertical for plumb piles, or not more than 4 percent from the required angle for batter piles will be permitted.

H101001 1.1.4 Mislocated and Damaged Piles

Remove and replace with new piles those piles that are cracked, damaged, mislocated, or installed out of alignment tolerance or provide additional piles, installed as directed by the Contractor’s Structural/Geotechnical Engineer, at no additional cost to the Government.

H101001 1.1.5 Pile Driver Analyzer

The dynamic wave equation method of analysis, pile driver analyzer, shall be used to validate pile and pile hammer compatibility, establish pile driving criteria, and establish terminal penetration resistance.

H101001 1.1.6 Pile Spacing

For cast-in-place concrete or augercast piles, provide adequate distance, as determined by the Contractor’s Structural / Geotechnical Engineer, between freshly placed concrete and other pile installation operations to avoid damage to concrete.

H101001 1.1.7 Prestressed Concrete Piling

The Designer of Record shall utilize UFGS Section 31 62 13.20, *Precast/Prestressed Concrete Piles*, or 31 62 13.24, *Prestressed Concrete Cylinder Piles*, for the project specification.

H101001 1.1.8 Reinforced Concrete Drilled Shaft

Concreting of reinforced concrete drill shaft with water inside the shaft shall be done using the tremie method of concrete placement. Disposition of the displaced water shall meet the environmental control requirements of Section 01 57 19.00 20, *Temporary Environmental Controls*, of Part 2. For concrete placed under water, non-destructive test method shall be specifies to verify the integrity of the concrete.

H101001 1.1.9 Steel Pipe Piles

Steel pipe pile with spiral-butt or spiral-lap seams shall not be used.

H101001 1.1.10 Coating for Steel Piles

For steel piles in contact with water, provide cathodic protection of the piles meeting the requirements of the “Cathodic Protection System” paragraph in PTS Section G40, *Site Electrical Utilities*. In addition, apply protective coating conforming to SSPC PS 11.01 and UFGS Section 09 97 13.26, *Coating of Steel Waterfront Structures*, on all surfaces of the steel piles exposed to water for corrosion protection. Handle treated or coated piles so as to protect the treatment or the coating. Repair damage or defects to treatment or coating.

H101001 1.2 SHEET PILES

Sheet pile can be used to provide vertical support to waterfront structure and shall be of either steel, precast reinforced concrete or fiberglass reinforced plastic construction. Refer to the “Sheet Pile Bulkhead” paragraph of this PTS Section for additional, including corrosion protection, requirements.

H101001 1.3 CAISSONS

Caisson can be used to provide vertical support to waterfront structure. Refer to the “Caissons” paragraph under “Quays” paragraph in this PTS Section for additional requirements.

H101001 1.4 COFFERDAMS

Cofferdam can be used to provide vertical support to waterfront structure and shall be constructed of steel sheet pile cells. Refer to the “Sheet Pile Bulkhead” paragraph in this PTS Section for additional requirements.

H101001 1.5 WRAPS AND ENCASEMENTS

Existing piles can be repaired by wrapping or encasing with non-corrosive material including but not limited to fiberglass reinforced plastic and reinforced concrete.

H101001 1.6 OTHER PILE FOUNDATION ELEMENTS

Not used.

H101002 PILE CAPS

Pile caps that are in contact with water (including ground water), and water spray shall meet the requirements of the “Marine Concrete” paragraph, including the use of epoxy coated rebar, in this PTS Section. Use of non-marine concrete and non-epoxy coated rebar in buried pile caps placed above ground water may be considered. Concrete cover on reinforcing steel, steel piling and other embedded steel items shall be at least 3 inches (75 mm).

H101003 QUAYS

Guidance on seismic performance requirement for tie-back sheet pile bulkheads and gravity retaining structures (including caissons) located in high seismic areas can be found in the Criteria Section of NFESC Technical Report TR-3103-SHR, *Seismic Criteria for California Marina Oil Terminals* (referenced from UFC 4-152-01).

H101003 1.1 SHEET PILES BULKHEAD

Sheet pile bulkhead can be used as a solid retaining structure and can be either of steel, reinforced precast concrete or fiberglass reinforced plastic construction with tie-back anchors or other means of anchors. Backfill behind the bulkhead shall be designed and constructed to minimize its liquefaction potential. Corrosion protection of steel sheet pile shall be in accordance with the requirements of the “Coating of Steel Piles” paragraph in this PTS Section. Top of sheet piles shall be encased in a reinforced concrete pile caps (refer to the “Pile Caps” paragraph in this PTS Section). Scour protection at the mud-line shall be considered in the design of sheet pile bulkhead.

H101003 1.1.1 Tie-Back Anchors

Design of the bulkhead and its tie-back anchors shall consider liquefaction potential of the site and the backfill behind the bulkhead. For tie-back anchors using piles and piles caps, refer to requirements in the “Piles” and “Pile Caps” paragraphs in this PTS Section.

H101003 1.1.2 Tie Rods

Corrosion protection shall be provided for steel tie-rods. Means of corrosion protection shall include cathodic protection meeting the requirements of “Cathodic Protection System” paragraph in PTS Section G40, *Site Electrical Utilities*, and either coated or tape-wrapped conforming to UFGS Section 09 97 13.28, *Protection of Buried Steel Piping and Steel Bulkhead Tie*.

H101003 1.2 CONCRETE GRAVITY WALLS

Concrete gravity walls can be used as a solid retaining structure and shall be of cast-in-place or precast concrete block construction.

Backfill behind the gravity walls shall be designed and constructed to minimize its liquefaction potential. Scour protection at the mud-line shall be considered in the gravity wall design.

H101003 1.3 BLOCK WALLS

Block walls constructed of masonry or stone blocks shall be reinforced with steel reinforcing bar and can be used for minor quay wall construction. Block wall shall not be used to retain the embankment in the primary wharf or pier structure.

H101003 1.4 CAISSONS

Precast reinforced concrete caissons can be used as a solid retaining structure. Backfill behind the caissons shall be designed and constructed to minimize its liquefaction potential. Scour protection at the mud-line shall be considered in the caisson design.

H101003 1.5 CRIBS

Crib wall of precast reinforced concrete units can be used for minor quay wall construction and cannot be used to retain embankment in the primary wharf or pier structure. Crib wall using steel units shall not be allowed.

H101003 1.6 OTHER QUAY ELEMENTS

Not used.

H101004 RELIEVING PLATFORMS

Relieving platform can be used in conjunction with a sheet pile bulkhead (with or without tie-back anchors) to reduce the lateral load on the sheet pile created by heavy surcharge load. Relieving platform consists of the following components: piles, sheet pile, pile caps, deck and fill. Requirements of these components are provided under the “Piles”, “Sheet Piles”, “Pile Caps” and “Deck” of this PTS Section.

H101005 REVETMENTS

Revetment can be used to retain the embankment either along the waterfront or upland to the pile-supported wharf or pier. Revetments can be constructed of rock dike or granular fill material. Refer to Section H30, *Coastal Protection*, for additional requirements. Design of the revetment shall consider liquefaction potential of the site. Guidance on seismic performance requirements of revetment in high seismic areas can be found in the Criteria Section of NFESC Technical Report TR-3103-SHR, *Seismic Criteria for California Marina Oil Terminals* (referenced from UFC 4-152-01). A cut-off wall (curtain wall) shall be provided at the interface between the pile-supported wharf/pier and the upland area (refer to the “Cut-Off Wall” paragraph in this PTS Section).

H101006 SEAWALLS

Seawall shall be designed to retain the soil behind the wall and to protect the waterfront from wave erosion. Seawall can be constructed to

retain fill above a caisson, cofferdam, revetment, concrete gravity wall or natural ground and shall be of reinforced concrete construction. Scour protection at the base of the wall shall be considered in the seawall design.

H101007 BOAT RAMPS

Boat ramp shall be designed to accommodate the launching of the specified boats and shall be constructed of sheet pile or reinforced concrete walls and reinforced concrete slab.

H101008 CUT-OFF WALLS

Cut-off walls or curtain walls shall be constructed at the interface between the wharf/pier deck and the backland and shall be designed to retain the land side soil without loss of material. Cut-off-wall can be either of reinforced concrete or steel/concrete sheet pile construction.

H101009 FIREWALLS AND HANGING PANELS

H101009 1.1 FIRE WALLS

Fire walls shall be provided for timber wharf/pier.

H101009 1.2 WAVE ATTENUATION PANELS

For site with high waves, pile supported wharf/pier shall be designed for the uplift wave forces. Wave attenuation panels can be installed to mitigate the wave impact to the wharf/pier structure.

Design life of the wave attenuation panels shall be the same as the primary wharf/pier structure.

H101009 1.3 OTHER WALLS AND PANELS

Not used.

H101090 OTHER SUBSTRUCTURE COMPONENTS

Not used.

H1020 SUPERSTRUCTURE

H1020 1.1 STRUCTURAL FRAME

For pile supported waterfront structures, the deck shall be supported on a lateral load resisting structural frame.

Structural frame elements of pile supported waterfront structures will include piling, columns, girders, beams and deck slab. No exposed steel deck framing will be allowed.

H1020 1.2 MAIN LATERAL-FORCE RESISTING SYSTEM

Any main lateral-force resisting system meeting the requirements of this Section may be used.

H102001 BEAM AND GIRDERS

For single level, or the lower level of a double level wharf/pier, beams and girders can be the same as the pile caps. Steel beam and girder shall be encased in non-corrosive material such as reinforced concrete, and fiberglass reinforced plastic. The deck shall be integrated with and composite to the beam and girder system. Beams and girders can be embedded into the deck slab for wharf/pier with thick deck. Refer to the “Deck” paragraph of this PTS Section for additional requirements.

H102002 COLUMNS

For single level wharf/pier, the supporting piles can be the same as the columns. For double level wharf/pier, the upper level can be supported on columns non-continuous from the lower lever columns/piles. Steel columns shall be encased in non-corrosive material such as reinforced concrete, and fiberglass reinforced plastic.

H102003 UTILITY ENCLOSURES

H102003 1.1 UTILITY VAULTS

Provide electrical pits/vaults under electrical power outlet assemblies and for above-deck substations and provide electrical manholes and handholes as required to meet the functional requirements of the “Electrical Utilities” paragraph in PTS Section H50, *Waterfront Utilities*. Use of below-deck substations/transformers (housed in a vault) is discouraged and its use will require special approval as specified in UFC 4-150-02.

Pits, vaults, manholes and handholes shall be constructed of reinforced concrete with water proof joints and seals to prevent sea and ground water infiltration. Manhole and handhole covers shall have sealed joints to preclude runoff and deck surface spills from entering the cavities. These covers shall be of concrete or steel construction and shall be designed for all waterfront structure live load. Manhole and handhole covers shall have lifting devises or means of lifting to facilitate removal of the covers. Provisions shall be made to drain any water accumulation inside the pits.

Concrete pits, vaults, manholes and handholes integrated with the pile supported deck shall meet the requirements of the “Marine Concrete” paragraph in this PTS Section. Use of non-marine concrete in manholes and handholes buried in soil and not integrated with the deck concrete can be used.

All exposed steel shall be protected from corrosion.

H102003 1.2 UTILITY TRENCHES

Provide utility trenches and covers as required to meet the functional requirements of the “Civil/Mechanical Utilities” paragraph in PTS Section H50, *Waterfront Utilities*.

Trenches shall be constructed of reinforced concrete with water proof joints and seals to prevent sea and ground water infiltration. Trench

covers, except at location of the utility stations, shall have sealed joints to preclude runoff and deck surface spills from entering the trench. Trench covers shall be of reinforced concrete or steel construction and shall be designed for all waterfront structure live loads. Trench covers shall have lifting devises or means of lifting to facilitate removal of the covers. Provisions shall be made to drain any water accumulation inside the trenches.

Concrete utility trench integrated with the pile supported deck shall meet the requirements of the “Marine Concrete” paragraph in this PTS Section. Use of non-marine concrete in utility trenches buried in soil and not integrated with the deck concrete can be used.

All exposed steel components shall be protected from corrosion.

H102090 OTHER SUPERSTRUCTURE ELEMENTS

Not used.

H1030 DECK

H103001 DECK

For open type of wharf/pier where the deck is supported on piles, waterfront structure deck shall be integrated with the framing system (beams, girders and columns system) meeting the requirements of the “Superstructure” paragraph in this PTS section. This elevated deck shall be of reinforced concrete construction meeting the requirements of the “Marine Concrete” paragraph in this PTS Section.

Electrical and communication conductors shall be contained in conduits embedded in the elevated deck, contained in concrete jacket below the deck, or supported by a raceway system inside an enclosure such as a covered utility trench/tunnel. Thickness of wharf concrete deck element shall be as required to adequately provide for size, number and concentration of conduit. Refer to the “Electrical Utilities” paragraph in PTS Section H50, *Waterfront Utilities*, for additional requirements.

The following systems shall not be used for this project: non-composite or composite concrete slabs on steel form deck, precast concrete soffit slabs without composite cast-in-place concrete overlay, wood deck on concrete, wood, or steel framing, and steel deck on concrete, wood or steel framing.

Elevated deck on wharf/pier shall be sloped to drain to the harbor (where allowed by local resource agencies) or to collection (where required by local resource agencies).

H103002 ON-GRADE SLAB

For wharf/pier deck supported on grade, provide Portland cement concrete pavement, asphalt concrete pavement, or structural reinforced concrete slab as required to meet the specified service conditions and loading in accordance with the requirements of this PTS Section, PTS Section G20 (for pavement design) and other portions of this RFP.

On-grade slab or pavement on wharf/pier shall be sloped to drain to the harbor (where allowed by local resource agencies) or to collection (where required by local resource agencies).

H103003 DECK OVERLAY

Concrete overlay placed on precast concrete soffit slabs shall be of composite reinforced concrete construction with reinforcing ties or stirrups connecting the overlay and precast slabs.

H103004 CURBS AND BULLRAILS

Curbs and bullrails meeting the requirements of Paragraph 4-7.3 in UFC 4-152-01 shall be provided along the waterside edges of wharf/pier. Curbs and bullrails shall be of reinforced concrete construction meeting the requirements of the “Marine Concrete” paragraph in this PTS Section.

H103005 MOORING FOUNDATIONS

Foundation shall be provided for mooring hardware such as bollards, double bitts and cleats. The mooring hardware foundations shall be adequate to resist the rated capacity of the hardware. Mooring hardware foundations on open wharf/pier shall be anchored into the deck and support framing. Mooring hardware foundations on-grade shall be of reinforced concrete construction supported on piles if recommended by the Contractor’s Structural/Geotechnical Engineers. Fully embedded anchor bolts shall be galvanized. Anchor bolts with exposed ends shall be of stainless steel.

H103006 HIGH MAST LIGHTING FOUNDATIONS

Foundation shall be provided for high mast light pole or regular light poles. Light pole foundations design shall meet the requirements IBC. Light pole foundations on open wharf/pier shall be anchored into the deck and support frame. Light pole foundations on grade shall be of reinforced concrete construction supported on piles if recommended by the Contractor’s Structural/Geotechnical Engineers. Fully embedded anchor bolts shall be galvanized. Anchor bolts with exposed ends shall be of stainless steel.

H103007 UTILITY MOUNDS

Electrical outlet assemblies and other electrical utility components shall be housed inside a power mounds. Power mound enclosure shall be constructed of the concrete or steel as specified in the “Deck” paragraph in ESR H10, *Waterfront Structures*, of Part 3. Power mound shall be designed to be waterproof and to withstand the wind and wave loads that existing at the waterfront.

H103008 EXPANSION JOINTS

Expansion joint shall be armored with steel as specified in the “Deck” paragraph in ESR H10, *Waterfront Structures*, of Part 3. Differential settlement across the joint shall be less than 1/8-inch (3 mm).

H103009 GUARD POSTS AND RAILING

Guard posts shall be provided to protect deck components including, but not limited to, light poles, telecommunication stations, life ring stations, and similar components from damaged by equipment and vehicle moving on the wharf/pier. Railing shall be provided for personnel protection. Guard posts and railing shall be of coated galvanized steel construction.

Pipe railing shall be constructed over utility risers to protect the risers from snagging of mooring lines. This pipe railing shall be constructed of steel piping as specified in the “Pipe Guardrail” paragraph in PTS Section H50, *Waterfront Utilities*, and the “Deck” paragraph in ESR H10, *Waterfront Structures*.

H103010 PAINT STRIPING

Paint striping shall follow the requirements of UFGS 32 17 23.00 20, *Pavement Markings*. Color shall be determined by the Contractor’s Designer-of-Record.

H103010 1.1 DECK STRIPING

Striping shall be provided on the wharf/pier deck. Striping requirements shall be determined based on safety consideration and to identify different operational areas. Minimum striping requirements are shown on the RFP drawings provided in Part 6.

H103010 1.2 CURB STRIPING

Paint new station marks on curb and bullrail along waterfront of wharf/pier at spacing of approximately every 25 feet (7.5 meters).

H103090 OTHER DECK COMPONENTS

Not used.

H1040 MOORING AND BERTHING SYSTEM

H104001 PRIMARY FENDER SYSTEM

H104001 1.1 FENDER PILES

Fender piles used in the primary fender system shall be closely spaced to provide adequate support to the fenders, or camels. Fender piles used in secondary fender system shall have maximum spacing of 10 feet (3 m).

Fender pile blockings and chocks shall be of plastic timber construction. Connecting hardware including but not limited to nuts, bolts, washers, brackets and pile collars for the fender pile system shall be of 316 or 316L stainless steel or galvanized steel construction. Provide UHMW polyethylene rubbing strips (secured by stainless steel fasteners) on the front face of each fender pile. For steel fender piles, if used, provide cathodic protection meeting the requirements of the “Cathodic Projection System” paragraph in PTS Section G40, *Site Electrical Utilities*, and apply protective coating conforming to SSPC PS 11.01 and UFGS Section 09 97 13.26, *Coating of Steel Waterfront Structures*.

No timber fender piles will be allowed.

H104001 1.2 FENDER FRAMING

Fender framing or panels may be required to support the fender or fender pile clusters. The framing can be of either stainless steel or coated and cathodically protected steel construction. The fender panels shall be of concrete or coated and cathodically protected steel construction.

H104001 1.3 FENDERS

Support framings or backing panels suitable for the type of fender used shall be provided. Refer to the “Fender Framing” paragraph in this PTS Section for additional requirements.

H104001 1.4 EXTRUDED FENDERS

Extruded fenders shall meet the “extruded fenders” related requirements in UFGS Section 35 59 13.16, *Marine Fenders*.

H104001 1.5 MOLDED FENDERS

Molded fenders shall meet the “molded fenders” related requirements in UFGS Section 35 59 13.16, *Marine Fenders*.

H104001 1.6 FOAM-FILLED FENDERS

Foam-filled fenders shall meet the “foam-filled fenders” related requirements in UFGS Section 35 59 13.16, *Marine Fenders*.

H104001 1.7 PNEUMATIC AND HYDRO-PNEUMATIC FENDERS

Pneumatic and hydro-pneumatic fenders shall meet the “pneumatic and hydro-pneumatic fender” related requirements in UFGS Section 35 59 13.16, *Marine Fenders*.

H104001 1.8 CAMELS

Camels design shall follow the design guidance in Paragraph 6-8 of UFC 4-152-01.

H104002 SECONDARY FENDER SYSTEM

Secondary fender system shall be provided between the primary fenders along the wharf/pier waterfront to protect wharf/pier from accidental contact with ships or routine berthing of barges and small crafts.

Refer to the “Fender Piles” and “Fender Framing” paragraphs in this PTS Section for requirements of fender piles used in secondary fender system.

H104003 CORNER FENDER SYSTEM

Corner fender system shall be provided at all corners of wharf/pier for accidental contact with ships or routine contact with tug boats. Refer to the “Fender Piles” and “Fender Framing” paragraphs in this PTS Section for additional requirements.

H104004 DOLPHINS

Breasting dolphin or mooring dolphins, if used shall meet the applicable requirements of the “Substructures”, “Superstructure”, and “Deck” paragraphs in this PTS Section.

H104005 MOORING HARDWARE

Analyses, selection and design of mooring and berthing system shall be in accordance with UFC 4-152-01 and UFC 4-159-03 based on mooring services specified in ESR Section H10, *Waterfront Structures*, of Part 3. Types, capacities and location of mooring hardware shall be as shown on the RFP drawings or reports provided in Part 6 or to be determined by the Contractor, whichever is more stringent.

Mooring hardware shall be coated in accordance with UFGS Section 09 97 13.26, *Coating of Steel Waterfront Structures*.

H104005 1.1 BOLLARDS

H104005 1.2 DOUBLE BITTS

H104005 1.3 CLEATS

H104005 1.4 QUICK RELEASE HOOKS

Not used.

H104005 1.5 CAPSTANS AND WINDLASSES

Not used.

H104090 OTHER MOORING AND BERTHING COMPONENTS

Not used.

H1050 APPURTENANCES

H1050 1.1 HANDRAILS

H1050 1.2 BROWS

Brow design shall follow the design guidance provided in Paragraph 7-4 of UFC 4-152-01.

H1050 1.3 ELECTRCIAL POWER CABLE BOOMS

For requirements for electrical power cable booms, refer to the “Electrical Power Cable Booms for Berthing of Submarine” paragraph in PTS Section H50, *Waterfront Utilities*.

H1050 1.4 FLOATS

Landing float design shall follow the design guidance provided in Paragraph 7-3 of UFC 4-152-01.

H1050 1.5 SAFETY LADDERS

Safety ladders shall be provided along the wharf/pier waterfront. Safety ladders shall be of Type 316 L stainless steel or fiberglass reinforced plastic construction and shall be spaced no more than 200 feet (60 meters). The bottom of the ladders shall be extended at least 2 feet (600 mm) below the MLLW. Member size for connections shall be 3/8-inch (10 mm) thick minimum. Ladder shall be designed for 300 pounds (1.33 kN) rated capacity minimum and a minimum of 250 pounds (1.11 kN) lateral load applied anywhere on the ladder. In all cases, the ladder shall meet OSHA requirements.

H1050 1.6 LIFE RINGS

Life rings with support stands and 90 feet (27 meters) rope minimum, spaced no more than 150 feet (45 meters) shall be provided along the wharf waterfront. The support stand shall be of stainless steel construction.

H1050 1.7 OIL CONTAINMENT BOOM AND SUPPORT ATTACHMENTS

-- End of Section --

SECTION H50

WATERFRONT UTILITIES
4/08

H50 GENERAL

H50 1.1 NARRATIVE

This Section must be used in conjunction with all parts of the Design Build (D/B) Request for Proposal (RFP) to determine the full requirements of this solicitation.

This Section covers installations within the waterfront facility. See PTS Sections G30, *Site Civil/Mechanical Utilities*, G40, *Site Electrical Utilities*, for continuation of systems beyond the five foot line.

H50 1.2 WATERFRONT UTILITIES DESIGN GUIDANCE

Provide the design and installation in accordance with the following references. This Performance Technical Specification (PTS) adds clarification to the fundamental requirements contained in the following Government Standards. The general requirements of this PTS Section are located in PTS Section Z10, *General Performance Technical Specification*.

H50 1.2.1 Government Standards

UNITED FACILITIES CRITERIA (UFC)

UFC 3-200-10N, *Civil Engineering*

UFC 3-600-10N, *Fire Protection Engineering*

UFC 4-150-02, *Design: Dockside Utilities for Ship Service*

UNIFIED FACILITIES GUIDE SPECIFICATIONS (UFGS)

UFGS Section 09 97 13.26, *Coating of Steel Waterfront Structures*

UFGS Section 26 05 33, *Dockside Power Connection Stations*

H50 1.3 QUALITY ASSURANCE

Qualifications, certifications, and Test Plans indicated herein shall be submitted 45 calendar days prior to the expected date of execution. Notify the Contracting Officer 14 calendar days prior to all testing. Submit test results within 7 calendar days of completion of testing.

The Designer of Record is responsible for approving the submittals listed below.

H50 1.3.1 Waterfront Civil/Mechanical Utilities

For waterfront civil/mechanical utilities quality assurance requirements, refer to applicable portion of the “Quality Assurance” paragraph in PTS Section G30, *Site Civil/Mechanical Utilities*.

H50 1.3.2 Waterfront Electrical Utilities

For waterfront electrical utilities quality assurance, refer to applicable portions of the “Quality Assurance” paragraph in PTS Section G40, *Site Electrical Utilities*.

H50 1.3.3 Waterfront Fire Protection

For waterfront fire protection quality assurance requirements, refer to applicable portion of the “Quality Assurance” paragraph in PTS Section D40, *Fire Protection*.

H50 1.4 DESIGN SUBMITTALS

Design submittals shall be in accordance with PTS Section Z10, *General Performance Technical Specification*, Section 01 33 10.05 20, *Design Submittal Procedures* in Part 2, UFC 3-200-10N, *Civil Engineering*, UFC 3-400-10N, *Mechanical Engineering*, UFC 3-500-10N, *Electrical Engineering*, UFC 3-600-10N, *Fire Protection Engineering*, and UFC 4-150-02, *Design: Dockside Utilities for Ship Services*.

H50 1.5 CONSTRUCTION SUBMITTALS

The general requirements of this PTS Section are located in PTS Section Z10, *General Performance Technical Specification*. Construction submittals shall be in accordance with Section 01 33 00.05 20, *Construction Submittal Procedures* in Part 2.

If an OMSI manual is not a contract requirement, then provide product data for all equipment; and submit operation and maintenance data in accordance with Section 01 78 24.05 20, *Facility Operation and Maintenance Support Information* in Part 2.

Provide certification that all adjustable protective device settings have been set in accordance with the coordination study for the as-built equipment and configuration.

H5010 CIVIL/MECHANICAL UTILITIES

H5010 1.1 PIPE LOCATION

Piping on deck with asphalt concrete pavement can be either placed underground, in a concrete trench or on a ledge outboard of the pier/wharf concrete curb/bullrail. Piping on elevated concrete deck or concrete deck on-grade can be placed in a concrete trench or on a ledge outboard of the pier/wharf concrete curb/bullrail. For utility trench requirements, refer to the “Utility Trenches” paragraph in PTS Section H10, *Waterfront Structures*.

H5010 1.2 TEMPORARY REMOVAL AND REPLACEMENT

Where necessary or as indicated on RFP drawings provided in Part 6, temporary removal and replacement of utilities and installation of interim facilities may be required to maintain services to existing facilities. Temporary replacement facilities shall match the function and quality of existing facilities.

H501001 POTABLE WATER

Requirements for potable water on pier/wharf are provided below. Additional requirements are provided in the “Potable Water Distribution” paragraph in PTS Section G30, *Site Civil/Mechanical Utilities*.

H501001 1.1 PIPING

Water service lines 100mm and smaller shall be brass pipe, ASTM B43, extra strong. Fittings shall be brass or bronze, FS WW-P-460, 120 psi (825 kPa) minimum. Water lines between 4 inches and 12 inches (100 mm and 300 mm) shall be ductile iron pipe (AWWA C151) or PVC pressure pipe (AWWA 900 DR18). Water lines placed above ground or in a trench shall be flanged ductile iron pipe (AWWA C115). Fittings shall be ductile iron (AWWA C110 or AWWA C153) with rubber sealed gasket joints (AWWA C115). Piping and fittings for ductile iron pipe shall have cement-mortar lining (AWWA C104).

H501001 1.2 VALVES

H501001 1.2.1 Gate Valves

Provide gate valves conforming to AWWA C509, nonrising stem type with flanged ends. Body, bonnet and gate shall be of ductile iron. Valves shall open by counterclockwise rotation of the valve stem. Stuffing boxes shall have O-ring stem seals. Stuffing boxes shall be bolted and constructed so as to permit easy removal of parts for repair. Bronze used in valves shall be Grade A, Grade D or Grade E as specified in AWWA C509. Valves shall have protective epoxy interior coating conforming to AWWA C550.

H501001 1.3 BACKFLOW PREVENTERS

Provide reduced pressure principle type backflow preventers, with epoxy coated and lined ductile iron bodies, replaceable bronze seats, stainless steel internal parts, nonrising stem gate shut-off valves, and suitable for pressures up to 175 psi (1,200 kPa) at 110 degrees F (43 degrees C).

H501001 1.4 PRESSURE REGULATORS

Provide adjustable pressure regulator to reduce incoming water pressure to level specified in the “Portable Water” paragraph of ESR Section H50, *Waterfront Utilities* in Part 3.

H501001 1.5 UTILITY STATION PIPING AND OUTLET

Piping and outlets shall be in accordance with UFC 4-150-02 or as shown in RFP drawings provided in Part 6.

H501002 SALTWATER

Not used.

H501003 SANITARY SEWER

Requirements for sanitary sewer on pier/wharf are provided below. Additional requirements are provided in the “Sanitary Sewer Piping” and “Sanitary Sewer Manholes & Cleanouts” paragraphs in PTS Section G30, *Site Civil/Mechanical Utilities*.

H501003 1.1 PIPING

Piping shall be ductile iron, flanged, conforming to AWWA C115/A21.15, Thickness Class 56. Fittings shall conform to AWWA C110/A21.10 or AWWA C153/A21.53 and shall have a pressure rating at least equivalent to that of the pipe. Pipe and fittings shall have a ceramic epoxy internal lining resistant to chemical attack.

H501003 1.2 VALVES

H501003 1.2.1 Plug Valves

Provide plug valves with cast iron bodies, MSS SP-78. Valves shall be rated for at least 175 psi (1,200 kPa) at 140 degrees F (60 degrees C). Valves and operators shall be designed for outdoor service. Provide valve with internal lining or coating compatible with ship and submarine sewage discharge.

H501003 1.2.2 Check Valves

Provide swing type check valve with flanged ends. Valves shall be designed for outdoor service. Valve materials shall be compatible with ship and submarine sewage discharge.

H501003 1.3 CAMLOCK HOSE COUPLING

Provide camlock hose coupling with stainless steel coupler body, Viton gasket, and twin cam arms with finger rings and stainless steel pins. Coupling shall have a pressure rating of at least 145 psi (1,000 kPa). Provide matching stainless steel plug with stainless steel connecting chain.

H501004 BILGE AND OILY WASTE

H501004 1.1 PIPING

Piping shall be ductile iron, flanged, conforming to AWWA C115/A21.15, Thickness Class 56. Fittings shall conform to AWWA C110/A21.10 or AWWA C153/A21.53 and shall have a pressure rating at least equivalent to that of the pipe. Pipe and fittings shall have a ceramic epoxy internal lining resistant to chemical attack.

H501004 1.2 VALVES

H501004 1.2.1 Plug Valves

Provide plug valves with cast iron bodies, MSS SP-78. Valves shall be rated for at least 175 psi (1,200 kPa) at 140 degrees F (60 degrees C). Valves and operators shall be designed for outdoor service. Provide valve with internal lining or coating compatible with ship and submarine bilge and oily waste discharge.

H501004 1.3 CAMLOCK HOSE COUPLING

Provide camlock hose coupling with stainless steel coupler body, Viton gasket, and twin cam arms with finger rings and stainless steel pins. Coupling shall have a pressure rating of at least 145 psi (1,000 kPa). Provide matching stainless steel plug with stainless steel connecting chain.

H501005 STEAM

Not used.

H501006 COMPRESSED AIR

Not used.

H501090 OTHER CIVIL/MECHANICAL UTILITIES

Not used.

H501091 MISCELLANEOUS MATERIAL

H501091 1.1 PIPE GUARDRAILS

Provide Schedule 80 pipe guardrails of stainless steel, ASTM A 312/A 312 M, Type 316L, or of galvanized and coated steel, with butt welding fittings of the same material and weight of the piping.

H501091 1.2 PIPE HANGERS AND SUPPORTS

Pipe hangers and supports shall conform with MSS SP-58 and MSS SP-69 and shall be of Type 316 or Type 316L stainless steel or galvanized steel.

H501091 1.3 HARDWARE

Hardware, including bolts, nuts, washers, anchors and screws, shall be of Type 316 stainless steel or galvanized steel.

H501091 1.4 MISCELLANEOUS METAL

Miscellaneous metal shall be standard mill finished structural steel shapes, galvanized ASTM A 36/ASTM A 36M steel, or Type 316L stainless steel.

H5020 ELECTRICAL UTILITIES

H5020 1.1 DUCT/CONDUIT PLACEMENT

Ducts and conduits located on elevated deck shall be embedded in the concrete deck. As an alternative, electrical cables can be contained inside concrete jackets supported below the deck.

H502001 ELECTRICAL POWER DISTRIBUTION

H502001 1.1 ELECTRICAL POWER DISTRIBUTION

Waterfront electrical power distribution systems may include the primary system to the substation and the secondary system that serves electrical power outlet assemblies located on the wharf/pier.

Electrical power distribution shall be in accordance with the requirements of the applicable portion of the “Electrical Distribution” paragraph in PTS Section G40, *Site Electrical Utilities*.

H502001 1.2 ELECTRICAL POWER OUTLET ASSEMBLIES

Refer to the “Utility Mounds” paragraph in PTS Section H10, *Waterfront Structures*, for enclosure for electrical power outlet assembly.

The Designer of Record shall utilize UFGS Section 26 05 33, *Dockside Power Connection Stations*, for work related to waterfront electrical power outlet assemblies. Multiple three phase, three wire power receptacles suitable for the power ratings specified in the “Electrical Power Distribution” paragraph of ESR Section H50, *Waterfront Utilities* in Part 3 shall be provided. These power outlet assemblies shall be served by substations with 3 phase, 3 wire delta secondaries. Each receptacle at the power

outlet assembly shall be supplied by a power circuit breaker that is capable of delivering the specified amperes continuously with adequate long time trip rating to allow continuous operation at specified amperes without nuisance tripping. Provide remote controls for each circuit breaker serving share power receptacles. Provide controls for primary and secondary main circuit breakers at the electrical power outlet assemblies served.

Industrial power outlets shall be provided for portable equipment used at pier side. Industrial power outlets shall include 3 phase 4 wire receptacles and 3 wire receptacles for the specified voltages, and 115 volt convenience receptacles. Industrial power outlets shall be served from a substation or transformer with grounded neutral secondary.

H502002 TELECOMMUNICATION

Refer to the “Utility Mounds” paragraph in PTS Section H10, *Waterfront Structures*, for enclosure for telecommunication stations.

Refer to the “Site Communication and Security” paragraph in PTS Section G40, *Site Electrical Utilities*, for requirements for Cable, wiring, ductbanks, manholes and handholes.

H502003 LIGHTING

Refer to the “Site Lighting” paragraph in PTS Section G40, *Site Electrical Utilities*, for requirements for over deck lighting.

Provide lighting fixtures mounted on high mast poles.

Provide a computer model of the illumination system using photometric data prepared for the fixture by an independent testing laboratory. Follow IES standards for preparation of the computer model. Adjust and modify the design to provide the illumination required. The corrosion protection features shall be suitable for the environmental condition at the site.

H502004 LIGHTNING PROTECTION

Lightning protection system shall be catenary wire type that complies with NFPA 780, MIL-HDBk-1004/6, *Lightning Protection*, and NAVSEA OP 5 Chapter 6, Lightning Protection. Protection system shall be design for protection of ordnance that is placed on the pier/wharf. Provide primary and secondary ground wires and means for connecting portable equipment to the grounding system. Material used shall be suitable for the environmental conditions at the site.

H502005 ELECTRICAL POWER CABLE BOOMS FOR BERTHING OF SUBMARINES

Function of the power boom is to support and deliver power cables from the on pier/wharf power outlet assembly to the points of power connection on the berthed submarine. Locations of the power booms and the ranch of operation are as shown on RFP drawings provided in Part 6.

The power boom shall be of galvanized steel construction with proper corrosion protection coating meeting the requirements of UFGS Section 09 97 13.26, *Coating of Steel Waterfront Structure*. Bolts, nuts and washers shall be hot deep galvanized. When the boom is under its stowed position at the pier/wharf or when the boom is positioned to connect the cables to the submarine, the boom shall be secured from unexpected movement in both horizontal and vertical directions. Both horizontal and vertical movements of the boom shall be activated manually with the assistance of power, mechanical or hydraulic device. Safeguard shall be provided to preclude

simultaneous movement in different directions and uncontrolled movement while the boom is in motion.

The power cable shall be supported on a cable tray in the boom with means of delivering the cables to the submarine at different locations as shown on RFP drawings provided in Part 6. Use of electrical hoist may be allowed.

All electrical or hydraulic components shall be suitable for outdoor services in marine environment. The rate of movement at the end of the boom shall be limited to 8 feet/minute (2.5 meters/minute). Moving elements that involve metal-to-metal contact shall have friction reduction components (such as Teflon coatings and bronze bushings).

Structural design requirements for the power boom shall be in accordance with PTS Section H10, *Waterfront Structure*.

H502090 OTHER ELECTRICAL UTILITIES

Not used.

H5030 WATERFRONT FIRE PROTECTION

H503001 FIRE PROTECTION WATER

H503002 FIRE ALARM

---End of Section---

SECTION H60

WATERFRONT DEMOLITION
4/08

H60 GENERAL

H60 1.1 NARRATIVE

This Section must be used in conjunction with all parts of the Design Build (D/B) Request for Proposal (RFP) to determine the full requirements of this solicitation.

This Section includes the requirements for the design and construction of waterfront demolition, described in ESR H60, *Waterfront Demolition*, of Part 3 and as identified on the RFP drawings provided in Part 6.

H60 1.2 WATERFRONT DEMOLITION DESIGN GUIDANCE

Provide the design and installation in accordance with the following references. This Performance Technical Specification (PTS) adds clarification to the fundamental requirements contained in the following Government Standards. The general requirements of this PTS Section are located in PTS Section Z10, *General Performance Technical Specification*.

H60 1.2.1 Government Standards

UNIFIED FACILITIES CRITERIA (UFC)

UFC 3-800-10N, *Environmental Engineering for Facility Construction*

UNIFIED FACILITIES GUIDE SPECIFICATIONS (UFGS)

UFGS Section 02 83 13.00 20, *Lead In Construction*

H60 1.2.2 General Requirements

H60 1.2.2.1 General Demolition

The work includes demolition, salvage of identified items and materials and removal of resulting rubbish and debris. Rubbish and debris shall be removed from Government property daily, unless otherwise directed. Materials that cannot be removed daily shall be stored in areas specified in the Demolition Plan. Remove indicated existing elements of waterfront facilities as identified on drawings provided in Part 6 and as required to be determined by the Contractor.

H60 1.2.2.2 Utilities

Remove existing utilities as identified in ESR H60, *Waterfront Demolition*, and on RFP drawings provided in Part 6 and terminate in a manner conforming to the nationally recognized code covering the specific utility.

H60 1.2.2.3 Dust Control

Prevent the spread of dust and debris and avoid the creation of a nuisance or hazard in the surrounding area.

H60 1.2.2.4 Traffic Control

Where pedestrian and vehicle safety is endangered, use traffic barricades.

H60 1.2.2.5 Burning

Burning will not be permitted.

H60 1.2.2.6 Lead Based Paint

Refer to the "Lead Based Paint" paragraph in PTS Section F20, *Selective Building Demolition*.

H60 1.2.2.7 Mercury and Low Level Radioactive (LLR) Component

Refer to the "Mercury and LLR Components" paragraph in PTS Section F20.

H60 1.2.2.8 PCB's

Refer to the "PCB's" paragraph in PTS Section F20, *Selective Building Demolition*.

H60 1.2.2.9 Ozone Depleting Substance (ODS)

Refer to the "ODS" paragraph in PTS Section F20, *Selective Building Demolition*.

H60 1.2.2.10 Salvage Material

All demolished material will become the property of the Contractor except for the salvage items identified in ESR H60, *Waterfront Demolition*, in Part 3. Salvage items will become the property of the Government.

H60 1.2.2.11 Permit and Environmental Control

Waterfront demolition work shall meet the permit and environmental control requirements of Section 01 57 19.00 20, *Temporary Environmental Controls for Design-Build*, in Part 2. In-water and over-water demolition shall not commence until the required USACOE permits are obtained and shall meet the conditions stipulated in the USACOE permits.

H60 1.3 QUALITY ASSURANCE

Qualifications, certifications, and Test Plans indicated herein shall be submitted 45 calendar days prior to the expected date of execution. Notify the Contracting Officer 14 calendar days prior to all testing. Submit test results within 7 calendar days of completion of testing.

The Designer of Record is responsible for approving the submittals listed below.

H60 1.4 DESIGN SUBMITTALS

Design submittals shall be in accordance with PTS Section Z10, *General Performance Technical Specification*, 01 33 10.05 20, *Design Submittal Procedures*, UFC 1-300-09N, *Design Procedures*, UFC 3-800-10N, *Environmental Engineering for Facility Construction*.

H60 1.5 CONSTRUCTION SUBMITTALS

The general requirements of this PTS Section are located in PTS Section Z10, *General Performance Technical Specification*. Construction submittals shall be in accordance with 01 33 00.05 20, *Construction Submittal Procedures*.

H6010 IN-WATER OR OVER-WATER DEMOLITION

Demolition of in-water or over-water substructure, superstructure, deck and coastal protection components identified on the RFP drawings provided in Part 6 or as required based on the Contractor's design shall be performed meeting the permit and environmental control requirements specified above.

H6020 NON-IN-WATER OR NON-OVER-WATER WATERFRONT DEMOLITION

For non-in-water or non-over-water waterfront demolition, refer to PTS Section F20, *Selective Building Demolition*.

H6030 HAZARDOUS COMPONENTS ABATEMENT

Refer to the "Hazardous Components Abatement" paragraph in Section F20, *Selective Building Demolition*.

---End of Section---

SECTION Z10

GENERAL PERFORMANCE TECHNICAL SPECIFICATION
04/08

Z10 GENERAL

Z10 1.1 NARRATIVE

All Performance Technical Specification (PTS) sections must be used in conjunction with all parts of the Design Build (D/B) Request for Proposal (RFP) to determine the full requirements of this solicitation. This PTS section provides general requirements for the other PTS sections of this RFP and is used in conjunction with the other PTS sections.

Refer to UFGS section 01 33 10.05 20, *Design Submittal Procedures* for the Order of Precedence of the RFP Parts. Requirements listed in the Project Program take precedence over the PTS sections requirements; therefore, requirements identified in the Project Program eliminate options related to that requirement in the PTS sections.

The PTS Sections are general in nature and not all items listed in the PTS sections will be required for this project. Refer to RFP Part 3 - Project Program, including the ESRs for project specific requirements.

Z10 1.2 DESIGN GUIDANCE

Provide work in compliance with the following design standards and codes, as a minimum. Government standards listed in this RFP take precedence over industry standards.

The PTS Sections reference published standards, the titles of which can be found in the Unified Master Reference List (UMRL) on the Whole Building Design Guide at the Unified Facilities Guide Specification (UFGS) Website. The publications referenced form a part of this specification to the extent referenced. The publications are referred to in the section text by the basic designation only. Industry standards, codes, and Government standards referenced in the section text, and not found in the UMRL, are listed at the beginning of the PTS sections.

The advisory provisions of all referenced codes, standards, and specifications shall be mandatory; substitute words such as “shall”, “must”, or “required” for words such as “should”, “may”, or “recommended,” wherever they appear. The results of these wording substitutions incorporate these code and standard statements as requirements. Reference to the “authority having jurisdiction” shall be interpreted to mean “Contracting Officer”. Comply with the required and advisory portions of the current edition of the standard at the time of contract award.

The following list of codes and standards is not comprehensive and is augmented by other codes and standards referenced and cross-referenced in the RFP.

Z10 1.2.1 INDUSTRY CODES

INTERNATIONAL BUILDING CODE (IBC) - with exceptions and additions noted in UFC 1-200-01

INTERNATIONAL MECHANICAL CODE (IMC)

INTERNATIONAL PLUMBING CODE (IPC)

NATIONAL FIRE CODES (NFC) - with exceptions and additions noted in UFC 1-200-01 and UFC 3-600-01

Z10 1.2.2 INDUSTRY REQUIREMENTS

WHOLE BUILDING DESIGN GUIDE (WBDG)

WHOLE BUILDING DESIGN GUIDE, Ensure Occupant Safety and Health (Systems Safety Engineering) at http://www.wbdg.org/design/ensure_health.php

Z10 1.2.3 GOVERNMENT STANDARDS

Z10 1.2.3.1 UNIFIED FACILITIES CRITERIA (UFC):

The UFC's required by this project are referenced in the contract documents or cross-referenced within referenced documents. The complete list of final UFC documents is located on the Whole Building Design Guide at http://www.wbdg.org/ccb/browse_cat.php?o=29&c=4. The following are significant UFC's available on the website above that are applicable to this project:

UFC 3-120-10, *Interior Design*

UFC 1-200-01, *General Building Requirements*

UFC 1-300-09N, *Design Procedures*

UFC 3-201-02, *Landscape Architecture*

UFC 3-220-01N, *Geotechnical Engineering Procedures for Foundation Design of Buildings and Structures*

UFC 3-300-10N, *Structural Engineering*

UFC 3-310-01, *Structural Load Data*

UFC 3-420-01, *Plumbing Systems*

UFC 3-560-01, *Electrical Safety; O&M*

UFC 3-580-10, *Design: Navy and Marine Corps Intranet (NMCI) Standard Construction Practices*

UFC 3-600-01, *Fire Protection Engineering for Facilities*

UFC 4-010-01, *DoD Minimum Antiterrorism Standards for Buildings* (This Antiterrorism Standard has wide ranging effect. Refer to

Part 3 for examples of discipline related building components that are affected)

UFC 4-010-02, *DoD Minimum Standoff distances for Buildings* (For Official Use Only)

UFC 4-023-03, *Design of Buildings to Resist Progressive Collapse*

OTHER NAVY-ONLY UNIFIED FACILITIES CRITERIA:

Other Navy-only UFC's are located in the DESIGN GUIDANCE TAB on the Navy Design-Build Request for Proposal Website at http://www.wbdg.org/ndbm/DesignGuid/DesignGuid.html?Tab=DesignGuid. The following are "Draft" Navy-only UFC documents that are applicable as final documents on this project:

UFC 3-100-10N, *Architecture*

UFC 3-200-10N, *Civil Engineering*

UFC 3-400-10N, *Mechanical Engineering*

UFC 3-500-10N, *Electrical Engineering*

UFC 3-600-10N, *Fire Protection Engineering*

UFC 3-800-10N, *Environmental Engineering for Facility Construction*

UFC 4-020-01, *DOD Security Engineering Facility Planning Manual*

UFC 4-021-02NF, *Security Engineering Design of Electronic Security Systems*

Z10 1.2.3.2 FEDERAL STANDARDS:

Uniform Federal Accessibility Standard (UFAS)

American with Disabilities Act Architectural Guidelines (ADAAG)

Occupational Safety and Health Association (OSHA)

Z10 1.3 MATERIALS AND EQUIPMENT REQUIREMENTS IDENTIFICATION

Z10 1.3.1 MATERIALS STANDARD

Refer to the Project Program for identification of Government Furnished Equipment.

The equipment items shall be supported by service organizations that are convenient to the equipment installation in order to render satisfactory service to the equipment on a regular and emergency basis during the warranty period of the contract.

Materials, equipment, fixtures, and other appurtenances shall comply with applicable Underwriters Laboratories, (UL) Inc., American National Standards Institute, Inc., and National Electrical Manufacturer's Association standards or applicable standards of a similar independent testing organization. All materials shall be new, and shall bear the label of Underwriters Laboratories whenever standards have been established and label service is normally and regularly furnished by the agency. All equipment provided shall be listed and labeled suitable for the specified purpose, environment, and application and installed in accordance with manufacturer's recommendations. Insulation shall be asbestos free.

Z10 1.3.2 EQUIPMENT NAMEPLATE IDENTIFICATION

Each item of equipment shall have a nameplate bearing the manufacturer's name, address, model number, and serial number securely affixed in a conspicuous place. The nameplate of the distributing agent will not be acceptable.

Z10 1.3.3 FIELD-APPLIED NAMEPLATES

Provide laminated plastic nameplates for each piece of equipment. Each nameplate must identify the function and, when applicable, the number designation of that piece of equipment as used in the design documents. Provide melamine plastic nameplates, 0.125 inch (3 mm) thick, white with black center core.

Z10 1.4 COMMISSIONING

Commission the building systems identified in the Project Program paragraph 2.2.3. Refer to UFGS section 01 45 00.05 20, *Design and Construction Quality Control* for commissioning requirements. Test reports must be certified by the Commissioning Authority (CA), that work is in compliance with requirements of the RFP.

Z10 1.5 PERFORMANCE VERIFICATION AND ACCEPTANCE TESTS

Verification of satisfactory construction and system performance shall be via Performance Verification Testing, Acceptance Tests, and submittal of test reports certified by the Designer of Record (DOR), that work is in compliance with requirements of the RFP. The Government reserves the right to witness all Performance Verification and Acceptance Tests, review data, and request other such additional inspections and repeat tests as necessary to ensure that the work and provided services conform to the stated requirements. Contractor shall pay the cost of all testing.

Refer to each PTS section to identify Performance Verification and Acceptance Testing related to the work identified in that PTS section.

Z10 1.6 SUBMITTALS

Contractor's design submittals that combines design and construction submittals, must jointly comply with UFGS sections 01 33 00.05 20, *Construction Submittal Procedures* and 01 33 10.05 20, *Design Submittal Procedures*. Contractor's construction submittals that submitted separate

from the design submittals must comply with UFGS 01 33 00.05 20, *Construction Submittal Procedures*.

Refer to “Construction Quality Control” in UFGS 01 33 00.05 20, *Construction Submittal Procedures* and 01 45 00.05 20, *Design and Construction Quality Control* to define reviewing and approving Authority of design and construction submittals.

Utilize the same materials and equipment that are approved and provided for an initial facility design, on all follow-on facilities that use the same design with-in this contract. Once the initial facility design is approved by the Government, the Contractor must obtain Government approval to change materials and equipment when designing and constructing follow-on facilities utilizing the same design.

Z10 1.6.1 - DESIGN SUBMITTALS

Design submittals shall be in accordance with Unified Facility Guide Specification (UFGS) section 01 33 10.05 20, *Design Submittal Procedures*, UFC 1-300-09N, *Design Procedures*, and other discipline-specific guidelines listed in the applicable PTS sections.

Some PTS sections identify and utilize UFGS sections as a project requirement. When a PTS section requires the use of a UFGS section, the Designer of Record (DOR) shall edit these UFGS sections for the project and submit the edited specification as a part of the design submittal. These required UFGS sections may only be augmented by manufacturer’s data and catalog cuts in the design submittal. The manufacturer’s data and catalog cuts can not take the place of these required specification sections in a combined design and construction submittal.

The DOR edited UFGS specifications shall (1) utilize the UFGS specification wording and requirements, (2) delete only portions of the UFGS specification that are not applicable to the project, (3) edit only the bracketed choices that are within the UFGS specification text, (4) edit blank bracketed options to include requirements that exercise prudence and adherence to acceptable industry standards, and (5) comply with the directions, directives, and requirements of all UFGS Criteria Notes. The UFGS Criteria Notes are typically bordered on the top and bottom by a line of asterisks to highlight their location.

Z10 1.6.2 - CONSTRUCTION SUBMITTALS

Submit for approval to the Designer of Record (DOR), construction submittals, product data, manufacturer’s information, shop drawings, and test reports on all materials and systems installed in the project, unless the DOR designates for QC approval. Refer to each PTS section for further construction submittal requirements relating to the work identified in that particular PTS section. Some PTS sections reference UFGS sections that will require more construction submittals for DOR approval than is stated above. Refer to Section 01 33 00.05 20 for the list of construction submittals reserved for Government Approval and Government Surveillance.

--End of Section--

Solicitation No.
N40192-10-R-2800

SMALL BUSINESS MULTIPLE AWARD CONSTRUCTION CONTRACT (MACC)

VARIOUS LOCATIONS, GUAM

PART V
PRESCRIPTIVE SPECIFICATIONS
Not used in this solicitation

Solicitation No.
N40192-10-R-2800

SMALL BUSINESS MULTIPLE AWARD CONSTRUCTION CONTRACT (MACC)

VARIOUS LOCATIONS, GUAM

PART VI
ATTACHMENTS

ORDER FOR SUPPLIES OR SERVICES

PAGE 1 OF

1. CONTRACT/PURCH ORDER/AGREEMENT NO.	2. DELIVERY ORDER/CALL NO.	3. DATE OF ORDER/CALL (YYYYMMMDD)	4. REQUISITION/PURCH REQUEST NO.	5. PRIORITY

6. ISSUED BY	CODE	7. ADMINISTERED BY (If other than 6)	CODE	8. DELIVERY FOB
				☐ DESTINATION ☐ OTHER (See Schedule if other)

9. CONTRACTOR	CODE	FACILITY	10. DELIVER TO FOB POINT BY (Date) (YYYYMMMDD)	11. X IF BUSINESS IS
NAME AND ADDRESS			12. DISCOUNT TERMS	☐ SMALL ☐ SMALL DISAD-VANTAGED ☐ WOMEN-OWNED
			13. MAIL INVOICES TO THE ADDRESS IN BLOCK	

14. SHIP TO	CODE	15. PAYMENT WILL BE MADE BY	CODE	MARK ALL PACKAGES AND PAPERS WITH IDENTIFICATION NUMBERS IN BLOCKS 1 AND 2.

16. TYPE OF ORDER			
	DELIVERY/CALL	☐	This delivery order/call is issued on another Government agency or in accordance with and subject to terms and conditions of above numbered contract.
	PURCHASE	☐	Reference your furnish the following on terms specified herein. **ACCEPTANCE.** THE CONTRACTOR HEREBY ACCEPTS THE OFFER REPRESENTED BY THE NUMBERED PURCHASE ORDER AS IT MAY PREVIOUSLY HAVE BEEN OR IS NOW MODIFIED, SUBJECT TO ALL OF THE TERMS AND CONDITIONS SET FORTH, AND AGREES TO PERFORM THE SAME.

NAME OF CONTRACTOR	SIGNATURE	TYPED NAME AND TITLE	DATE SIGNED (YYYYMMMDD)

☐ If this box is marked, supplier must sign Acceptance and return the following number of copies:

17. ACCOUNTING AND APPROPRIATION DATA/LOCAL USE

18. ITEM NO.	19. SCHEDULE OF SUPPLIES/SERVICES	20. QUANTITY ORDERED/ ACCEPTED*	21. UNIT	22. UNIT PRICE	23. AMOUNT
					$0.00 $0.00 $0.00

*If quantity accepted by the Government is same as quantity ordered, indicate by X. If different, enter actual quantity accepted below quantity ordered and encircle.	24. UNITED STATES OF AMERICA BY: CONTRACTING/ORDERING OFFICER	25. TOTAL	$0.00
		26. DIFFERENCES	

27a. QUANTITY IN COLUMN 20 HAS BEEN

☐ INSPECTED ☐ RECEIVED ☐ ACCEPTED, AND CONFORMS TO THE CONTRACT EXCEPT AS NOTED:

b. SIGNATURE OF AUTHORIZED GOVERNMENT REPRESENTATIVE	c. DATE (YYYYMMMDD)	d. PRINTED NAME AND TITLE OF AUTHORIZED GOVERNMENT REPRESENTATIVE

e. MAILING ADDRESS OF AUTHORIZED GOVERNMENT REPRESENTATIVE	28. SHIP. NO.	29. D.O. VOUCHER NO.	30. INITIALS
	☐ PARTIAL ☐ FINAL	32. PAID BY	33. AMOUNT VERIFIED CORRECT FOR
f. TELEPHONE NUMBER / g. E-MAIL ADDRESS	31. PAYMENT		34. CHECK NUMBER
36. I CERTIFY THIS ACCOUNT IS CORRECT AND PROPER FOR PAYMENT.	☐ COMPLETE		
a. DATE (YYYYMMMDD) / b. SIGNATURE AND TITLE OF CERTIFYING OFFICER	☐ PARTIAL ☐ FINAL		35. BILL OF LADING NO.

37. RECEIVED AT	38. RECEIVED BY (Print)	39. DATE RECEIVED (YYYYMMMDD)	40. TOTAL CON-TAINERS	41. S/R ACCOUNT NUMBER	42. S/R VOUCHER NO.

AMENDMENT OF SOLICITATION/MODIFICATION OF CONTRACT

1. CONTRACT ID CODE	PAGE OF PAGES

2. AMENDMENT/MODIFICAITON NO.	3. EFFECTIVE DATE	4. REQUISITION/PURCHASE REQ. NO.	5. PROJECT NO. *(If applicble)*

6. ISSUED BY CODE	7. ADMINISTERED BY *(If other than Item 6)* CODE

8. NAME AND ADDRESS OF CONTRACTOR *(No., street, county, State and ZIP Code)*	(X)	9A. AMENDMENT OF SOLICIATION NO.
	☐	9B. DATED *(SEE ITEM 11)*
	☐	10A. MODIFICATION OF CONTRACT/ORDER NO.
		10B. DATED *(SEE ITEM 13)*
CODE / FACILITY CODE		

11. THIS ITEM ONLY APPLIES TO AMENDMENTS OF SOLICITATIONS

☐ The above numbered solicitation is amended as set forth in Item 14. The hour and date specified for receipt of Offers ☐ is extended, ☐ is not extended.

Offers must acknowledge receipt of this amendment prior to the hour and date specified in the solicitation or as amended, by one of the following methods: (a)By completing items 8 and 15, and returning _____ copies of the amendment; (b) By acknowledging receipt of this amendment on each copy of the offer submitted; or (c) By separate letter or telegram which includes a reference to the solicitation and amendment numbers. FAILURE OF YOUR ACKNOWLEDGMENT TO BE RECEIVED AT THE PLACE DESIGNATED FOR THE RECEIPT OF OFFERS PRIOR TO THE HOUR AND DATE SPECIFIED MAY RESULT IN REJECTION OF YOUR OFFER. If by virtue of this amendment your desire to change an offer already submitted, such change may be made by telegram or letter, provided each telegram or letter makes reference to the solicitation and this amendment, and is received prior to the opening hour and date specified.

12. ACCOUNTING AND APPROPIRATION DATA *(If required)*

13. THIS ITEM ONLY APPLIES TO MODIFICATION OF CONTRACTS/ORDERS. IT MODIFIES THE CONTRACT/ORDER NO. AS DESCRIBED IN ITEM 14.

CHECK ONE	
☐	A. THIS CHANGE ORDER IS ISSUED PURSUANT TO: *(Specify authority)* THE CHANGES SET FORTH IN ITEM 14 ARE MADE IN THE CONTRACT ORDER NO. IN ITEM 10A.
☐	B. THE ABOVE NUMBERED CONTRACT/ORDER IS MODIFIED TO REFLECT THE ADMINISTRATIVE CHANGES *(such as changes in paying office, appropriation date, etc.*) SET FORTH IN ITEM 14, PURSUANT TO THE AUTHORITY OF FAR 43.103(b).
☐	C. THIS SUPPLEMENTAL AGREEMENT IS ENTERED INTO PURSUANT TO AUTHORITY OF:
☐	D. OTHER *(Specify type of modification and authority)*

E. IMPORTANT: Contractor ☐ is not, ☐ is required to sign this document and return _____ copies to the issuing office.

14. DESCRIPTION OF AMENDMENT/MODIFICATION (*Organized by UCF section headings, including solicitation/contract subject matter where feasible.)*

Except as provided herein, all terms and conditions of the document referenced in Item 9A or 10A, as heretofore changed, remains unchanged and in full force and effect.

15A. NAME AND TITLE OF SIGNER *(Type or print)*		16A. NAME AND TITLE OF CONTRACTING OFFICER *(Type or print)*	
15B. CONTRACTOR/OFFEROR *(Signature of person authorized to sign)*	15C. DATE SIGNED	16B. UNITED STATES OF AMERICA *(Signature of Contracting Officer)*	16C. DATE SIGNED

QC Manager Duties

- The QC Manager shall have no job-related responsibilities other than QC unless specifically permitted in the particular project's specification.
- He shall be on the site at all times during progress of the work, with complete authority to take any action necessary to ensure conformance with the contract requirements. In the event of his absence, the approved alternate shall be on the site. ***NOTE: See Section 01 45 00.05 20 for further guidance***
- Authority to immediately stop any segments of work, which does not comply with the contract plans and specifications, and directs the removal and replacement of any defective work.
- Will conduct daily inspection of work performed for compliance with plans and specifications.
- Must certify daily that all materials and equipment delivered/installed in the work comply with contract plans and specifications. Certify daily that all work performed on the construction site and off the construction site conforms to plans and specifications. Report any deficiencies and remedial action planned and taken.
- Supervise and coordinate the inspection and tests made by the members of the Quality Control Organization, including subcontractors.
- Assure QC staff is adequate to meet its responsibilities.
- Maintain a copy of the ROICC approved QC Plan on file at the job site, complete with up-to-date approved revisions/filled-in log of submittals. Maintain at the job site an up-to-date QC Submittal Register (provided in the specification) showing the status of all submittals required by the contract.
- Maintain at the job site a testing plan showing status of all tests required by the contracts. Ensure that all tests required are performed and results are reported. Indicate whether test results show the item tested conforms to contract requirements or not.
- Authority to remove any individual from the site who fails to perform their work in a skillful, safe and workmanlike manner or whose work does not comply with the contract plans and specifications.
- QC manager does not have authority to deviate from plans and specifications without prior approval, in writing, from the ROICC.
- Ensure that the Contractor's Quality Control Organization is adequately staffed with qualified personnel to perform all the detailed inspections and testing specified in the plans and specifications.
- Maintain at the job site the up-to-date QC Rework Items List.

Items in Letters of Authority to QC Manager and Alternate.

The appointing letter to the QC Manager and the Alternate shall detail their authority and responsibility to act for the Contractor. It should also outline duties, responsibilities, and authority without any job-related responsibilities other than QC.

The QC Manager or approved Alternate must be on the site at all times during progress, with complete authority to take any action necessary to insure conformance with the contract requirements.

The QC Manager's Letter of Appointment will specifically address the following items:

- Authority to immediately stop any segment of work which does not comply with the contract plans and specifications, and direct the removal and replacement of any defective work.
- Conduct daily inspection of work performed each day for compliance with plans and specifications.
- Certify daily that all materials and equipment delivered/installed in the work comply with contract plans and specifications. Certify daily that all work performed on the construction site and off the construction site conforms to plans and specifications. Report any deficiencies and remedial action planned and taken.
- Supervise and coordinate the inspection and tests made by the members of the Quality Control Organization including subcontractors.
- Assure QC staff is adequate to meet its responsibilities.
- Insure that all tests required are performed and the results reported. Indicate whether test results show the item tested conforms to contract requirements or not. Ensure corrective work achieves acceptable test results.
- Maintain at the job site a testing plan showing status of all tests required by the contracts.
- Authority to remove any individual from the site who fails to perform work in a skillful, safe and workmanlike manner or whose work does not comply with the contract plans and specifications.
- QC Manager has no authority to deviate from plans and specifications without prior approval, in writing, from the Contracting Officer or designated representative.
- Ensure that the Contractor's Quality Control Organization is adequately staffed with qualified personnel to perform all the detailed inspections and testing specified in the plans and specifications.
- Maintain a copy of the approved QC Plan on file at the job site complete with up-to-date approved revisions/filled-in log of submittals.
- Maintain at the job site an up-to-date QC Submittal Status Log showing status of all submittals required by the contract.

- Maintain at the job site an up-to-date Noncompliance Check-off List (Log of deficiencies) on all nonconforming work.
- Assure that As-Built Drawings are kept current by showing all deviations made from the contract drawings on a daily basis.

Sample Letter

1 April 1999

Tom Stone

1000 State Street

San Diego, CA

SUBJECT: QC Manager, Appointment as

RE: Contract N62474-83-C-0000, Maintenance Hanger, NAS

Dear Sir:

You are hereby appointed as the Contractor Quality Control Manager (QC Manager) for Pacific Construction Co., Inc. during the term of this contract.

You are directed to follow the inspection procedures, instructions, and reports in strict compliance with the contract drawings and specifications and any authorized changes thereto. As a direct representative of the company, you are authorized and directed to perform the following duties:

1. Approve all Shop Drawings and submittals for conformance to the contract requirements. You are to keep a status log and Testing Plan up to date and record copies of your approved submittals are to be forwarded to the NAVY Contract Administrator Submittals that require Government approval are to be forwarded to the designated party for appropriate action after your certification.

2. Inspect the work performed on a continual basis for compliance with current drawings and specifications. You have the authority to issue a stop work order on any item or work feature pending satisfactory correction of any deficiency in that work, particularly if the defective work is to be enclosed, is to support further construction, or will be inaccessible if further work proceeds. You have the authority to direct removal and replacement of any defective work.

3. Perform, supervise, or coordinate as required the reviews, inspections, and tests to be made by other members of your Quality Control Organization.

4. Inspect and certify that all material and equipment delivered to the job site complies with the approved submittals.

5. Ensure that all required test and/or inspections are performed, and report the results in the daily Contractor Quality Control Report.

6. File Certified Contractor Quality Control Reports, on the forms provided, with the NAVY Contract Administrator. These reports are to cover prime and subcontractor personnel and equipment on the site, idle

equipment and personnel, material deliveries, weather conditions, work accomplished, inspections, and tests conducted, results of inspections and tests, deficiencies found, and corrective action taken.

7. Maintain as-builts. At the job site, two sets of full-size contract drawings shall be marked to show any deviations that have been made from the contract drawings.

8. Recommend to Mr/Ms (indicate Name & Title) removal of any individual from the project who consistently fails to perform work properly.

9. Report to me any subcontractor who consistently does not conform to the contract drawings and specifications.

10. Keep a copy of the approved QC Plan, with up-to-date approved revisions, on file at the job site.

Very truly yours,

CONSTRUCTION CO., INC.

President

SAMPLE

Table 1. Contents of the QC Plan

Item	Description & Remarks	01450	SF-01450
Table of Contents	The Table of Contents should include Tabs for each required item in the Plan.	Required	Required
QC Organization Chart	The quality control organization depicted in chart form, showing the relationship of the quality control organization to other elements of the Prime Contractor's company as well as subs, suppliers, and other outside organizations.	Required	Not Required
Names & Qualifications	The qualifications for the QC Manager and staff are required. The acceptance of these personnel must be based on the stated qualifications and past experience in comparison to the requirements indicated in the specifications. A list of the proposed requirements must be provided to the EFD CQM Staff for approval prior to advertisement of the contract.	Required	Required
Duties and Responsibilities	Area of responsibility and authority of each individual in the quality control organization, outlined in detail. Some duties and responsibilities may overlap and require clarification as work progresses. NAVFAC policy does not preclude the Prime Contractor from using subcontractor personnel as part of the quality control staff. However, the Prime Contractor should understand that the QC organization acts on behalf of the prime and that the prime is be held responsible for their actions.	Required	Required
Outside Organizations	Outside organizations include design agents, consultants, and subcontractors that will perform work or services for the prime under this contract. The list should also indicate the general scope of the work or services to be performed.	Required	Optional
Appointment Letter(s)	A copy of the letter appointing the QC Manager, signed by an officer of the firm, outlining the QC Manager's duties, responsibilities, and authority. This letter must include the authority to direct removal and replacement of any defective work. This letter provides the authority for the QC Manager to act as an agent of the Contractor. No QC plan can be accepted unless these requirements are satisfactorily addressed in the appointing letter. A sample of the appointing letter is provided in Appendix A.	Required	Optional
Submittal Procedures	Procedures for reviewing all shop drawings, samples, certificates, or other submittals for contract compliance, including the name of the person(s) authorized to sign the submittals for the Contractor as complying with the contract. Procedures for processing submittals and responsibility for approving each submittal must be included in the plan. A sample of the Contractor's proposed approval stamp(s) should be included for verification against the contract requirements. The Contractor shall also include a submittal status log listing all submittals required by the specifications and stating the action required by the Contractor and the Government. The Contractor shall complete columns (a) through (e) of this log and name the persons authorized to review the submittals.	Required	Required
Testing Lab Information	A listing of testing laboratories that will be employed by the Contractor and a description of the services these firms will provide, including statements of their accreditation as required by the contract. If there is any question regarding the capability of a particular testing organization, refer to Appendix B, Approval of Material Testing Laboratories for Construction Contracts.	Required	Optional
Testing Plan and Log	This plan includes the tests required, referenced by the specification paragraph number requiring the test, the frequency, and the person responsible for each test.	Required	Required
Rework Procedure	These include the Contractor's internal procedures to identify, document, track, and sign off completion of deficiencies in the construction.	Required	Required

Item	Description & Remarks	01450	SF-01450
Documentation Procedures	The procedures for documenting quality control operation, inspection, and testing must be addressed and a copy of all forms and reports to be used included. The Contractor's reporting requirement includes preparation of daily reports.	Required	Required
List of Definable Features of Work	The listing of Definable Features of Work is the fundamental breakdown of the project into distinct tasks. Special care should be taken to review this list and ensure that the activities not only meet the minimum requirements contained in the specifications, but are practicable for use throughout the project.	Required	Required
Performing The Three Phases of Control	The Preparatory and Initial Phase Checklists provided in Appendices G. and H. will be completed for each DFOW..	Required	Required
Personnel Matrix	Where required, this matrix assigns responsibility by name for documentation of the three phases of control and testing activities, as well as review and approval of submittals. This matrix should assign these responsibilities by Specification Section.	Optional	Optional
Completion Inspection Procedures	The Completion Inspection Procedures outline the turnover process including assignment of responsibility for various phases of turnover. The Punch-Out Inspection is to be completed by the Contractor QC Manager. The Pre-Final Inspection is done by the Government with the QC Manager. The Contracting Officer, based on the completion of the pre-final schedules, conducts the Final Inspection. The Contractor's QC Manager, the Contracting Officer or designated representative and the client representative should be present.	Required	Required

CONTRACTOR QUALITY CONTROL REPORT

(ATTACH ADDITIONAL SHEETS IF NECESSARY)

DATE

REPORT NO

PHASE | CONTRACT NO | CONTRACT TITLE

PREPARATORY

WAS PREPARATORY PHASE WORK PREFORMED TODAY? YES ☐ NO ☐

IF YES, FILL OUT AND ATTACH SUPPLEMENTAL PREPARATORY PHASE CHECKLIST.

Schedule Activity No.	Definable Feature of Work	Index #

INITIAL

WAS INITIAL PHASE WORK PREFORMED TODAY? YES ☐ NO ☐

IF YES, FILL OUT AND ATTACH SUPPLEMENTAL INITIAL PHASE CHECKLIST.

Schedule Activity No.	Definable Feature of Work	Index #

FOLLOW-UP

WORK COMPLIES WITH CONTRACT AS APPROVED DURING INITIAL PHASE? YES ☐ NO ☐

WORK COMPLIES WITH SAFETY REQUIREMENTS? YES ☐ NO ☐

Schedule Activity No.	Description of Work, Testing Performed & By Whom, Definable Feature of Work, Specification Section, Location and List of Personnel Present

REWORK ITEMS IDENTIFIED TODAY (NOT CORRECTED BY CLOSE OF BUSINESS)

Schedule Activity No.	Description

REWORK ITEMS CORRECTED TODAY (FROM REWORK ITEMS LIST)

Schedule Activity No.	Description

REMARKS (Also Explain Any Follow-Up Phase Checklist Item From Above That Was Answered "NO"), Manuf. Rep On-Site, etc.

Schedule Activity No.	Description

On behalf of the contractor, I certify that this report is complete and correct and equipment and material used and work performed during this reporting period is in compliance with the contract drawings and specifications to the best of my knowledge except as noted in this report.

AUTHORIZED QC MANAGER AT SITE DATE

GOVERNMENT QUALITY ASSURANCE REPORT

DATE

QUALITY ASSURANCE REPRESENTATIVE'S REMARKS AND/OR EXCEPTIONS TO THE REPORT

GOVERNMENT QUALITY ASSURANCE MANAGER DATE

4296/2 (9/98) SHEET OF

CONTRACTOR QUALITY CONTROL REPORT

(CONTINUATION SHEET)

(ATTACH ADDITIONAL SHEETS IF NECESSARY)

DATE

REPORT NO.

PHASE	CONTRACT NO	CONTRACT TITLE

FOLLOW-UP

WORK COMPLIES WITH CONTRACT AS APPROVED DURING INITIAL PHASE? YES ☐ NO ☐

WORK COMPLIES WITH SAFETY REQUIREMENTS? YES ☐ NO ☐

Schedule Activity No.	Description of Work, Testing Performed & By Whom, Definable Feature of Work, Specification Section, Location and List of Personnel Present

REMARKS (Also Explain Any Checklist Item From Above That Was Answered "NO"), Manuf. Rep. On-Site, etc.

Schedule Activity No.	Description

2496/2A (9/98) SHEET OF

Table 2. Sample Approval Checklist

Item Description	Items to be checked	✓
General Items	• As-built drawing statement. The required full-size set of marked up contract drawings to be maintained on-site, updated monthly and submitted to AOIC after completion of construction.	
Table of Contents	• TOC is included • Page numbers are indicated • Revision sheet is included to indicate any changes made to the plan during the course of construction.	
QC Organization Chart	• Relationship of QC Manager to officer of firm to whom he reports. • Relationship of QC Manager to other members of QC staff. • Relationship of QC Manager to subcontractor QC Managers or foremen. • Relationship of QC Manager to consultants, testing firms, etc. • Relationship of QC Manager to Prime Contractor's superintendent	
Names & Qualifications	• Names and qualifications of personnel in the QC organization. Multi-page resumes are not desired. Qualifications of an individual should be confined to one or two pages and should relate to person's function in the QC organization. Pertinent information would include education and training, construction experience, quality control experience and management experience.	
Duties and Responsibilities	• The area of responsibility and authority of each individual in the QC organization is clearly stated.	
Outside Organizations	• A list of outside organizations such as testing laboratories, architects, and consulting engineers that will be employed and a description of the services they will provide.	
Appointment Letter(s)	• Letter appointing the QC Manager	
Submittal Procedures	• Submittal Review Procedure including names of persons authorized to sign submittals for the Contractor. • Submittal Status Log. • Specification matrix indicating who the authorized submittal reviewer, inspector, and testing lab personnel (both on-site and factory) will be for each technical specification section.	
Testing Lab Information	The Contractor must provide the following information for each independent testing laboratory for Government approval: 1. Functional description of lab's organizational structure. 2. List and resume of testing lab personnel. 3. Affidavit of compliance with applicable ASTM publications and certification that all lab work will be performed in accordance with contract technical specifications. 4. List of inspection equipment corresponding to each test noted in the testing log and equipment calibration certificate. 5. Certification from a nationally recognized agency. 6. Affidavits for special inspections must be submitted to the Contracting Officer before progress payments for the work are approved.	
Testing Plan and Log	• Testing plan includes all formal tests and the specification reference • Responsible parties identified for each test	
Rework Procedures	• Non-compliance check-off list (Log of Deficiencies Form)	

Documentation Procedures	• Specific statement in the QC reports indicating that a Professional Engineer inspected any designs and/or certifications for formwork, falsework, or erection procedures, if applicable. • QC/DRI Daily Report Form.	
List of Definable Features of Work	As a minimum, this will include each section of the specification cross referenced to the production schedule. For projects requiring a progress chart (Bar or Gantt Chart), the list of DFOW shall include but not be limited to all items of work on the schedule. For projects requiring a network analysis, the list of DFOW shall include but not be limited to all critical path activities.	
Preparatory and Initial Phase Checklists	• Dependent on the editing of Specification Section 01450; include a copy of the forms provided in Section 01450 or copies of the forms with the heading partially filled in (Spec Section, Contract Number, DFOW title and Schedule Activity Number) for each DFOW. • No initial development of the checklists is required, beyond inclusion of the sample checklists contained in Appendices G. and H.	
Personnel Matrix	Personnel assignment for each specification section on who is responsible for: • Review and approval of submittals • Perform and document the 3 Phases of Control • Perform and document the testing • Performing punch-out, pre-final, and final inspections	
Completion Inspection Procedures	Identify process and the responsible party(s) for documenting completion inspections for: • Punch-Out Inspections • Pre-Final Inspections • Final Acceptance Inspection	

Instructional Notes for Daily Production Report Form

Reports are required for each day that work is performed and shall accompany the submission of the Contractor QC Report prepared for the same day. This requirement shall commence at the beginning of the construction phase of work and continue through final completion of the Contract. Account for each calendar day throughout the life of the Contract. The reporting of work shall be identified by terminology consistent with the construction schedule. Contractor Production Reports are to be prepared, signed and dated by the Project Superintendent and shall contain the following information:

a. Date of report, report number, name of Contractor, Contract number, title and location of Contract and Superintendent present.
b. Weather conditions in the morning and in the afternoon including maximum and minimum temperatures.
c. Identify work performed by corresponding Schedule Activity No., PC#, Modification No., etc.
d. A list of Contractor and subcontractor personnel on the work site, their trades, employer, work location, description of work performed, hours worked by trade, daily total work hours on work site this date (incl. hours on continuation sheets), and total work hours from start of construction.
e. A list of job safety actions taken and safety inspections conducted. Indicate that safety requirements have been met including the results on the following:
    1) Was a job safety meeting held this date? (If YES, attach a copy of the meeting minutes.)
    2) Were there any lost time accidents this date? (If YES, attach a copy of the completed OSHA report.)
    3) Was crane/man lift/trenching/scaffold/high voltage electrical/high work/hazmat work done? (If YES, attach a statement or checklist showing inspection performed.)
    4) Was hazardous material/waste released into the environment? (If YES, attach a description of incident and proposed action.)
f. Identify Schedule Activity No. related to safety action and list safety actions taken today and safety inspections conducted.
g. Identify Schedule Activity No., Submittal # and list equipment/material received each day that is incorporated into the job.
h. Identify Schedule Activity No., Owner and list construction and plant equipment on the work site including the number of hours used.
i. Include a "remarks" section in this report which will contain pertinent information including directions received, problems encountered during construction, work progress and delays, conflicts or errors in the Contract documents, field changes, safety hazards encountered, instructions given and corrective actions taken, delays encountered and a record of visitors to the work site. For each remark given, identify the Schedule Activity No. that is associated with the remark.

Contractor Production Report (Continuation Sheet)

Additional space required to contain daily information on the Contractor Production Report will be placed on its Continuation Sheet(s). An unlimited number of Continuation Sheets may be added as necessary and attached to the Production Report.

CONTRACTOR PRODUCTION REPORT

(ATTACH ADDITIONAL SHEETS IF NECESSARY)

		DATE
CONTRACT NO	TITLE AND LOCATION	REPORT NO
CONTRACTOR	SUPERINTENDENT	
AM WEATHER	PM WEATHER	MAX TEMP (F) / MIN TEMP (F)

WORK PERFORMED TODAY

Schedule Activity No.	DEFINABLE FEATURE OF WORK, WORK LOCATION AND DESCRIPTION	EMPLOYER	NUMBER	TRADE	HRS

JOB SAFETY

WAS A JOB SAFETY MEETING HELD THIS DATE? (If YES attach copy of the meeting minutes)	☐ YES	☐ NO	TOTAL WORK HOURS ON JOB SITE, THIS DATE, INCL CON'T SHEETS
WERE THERE ANY LOST TIME ACCIDENTS THIS DATE? (If YES attach copy of completed OSHA report)	☐ YES	☐ NO	CUMULATIVE TOTAL OF WORK HOURS FROM PREVIOUS REPORT
WAS CRANE/MANLIFT/TRENCHING/SCAFFOLD/HV ELEC/HIGH WORK/ HAZMAT WORK DONE? (If YES attach statement or checklist showing inspection performed.)	☐ YES	☐ NO	
WAS HAZARDOUS MATERIAL/WASTE RELEASED INTO THE ENVIRONMENT? (If YES attach description of incident and proposed action.)	☐ YES	☐ NO	TOTAL WORK HOURS FROM START OF CONSTRUCTION

Schedule Activity No.	DEFINABLE FEATURE OF WORK AND LIST SAFETY ACTIONS TAKEN TODAY/SAFETY INSPECTIONS CONDUCTED ☐ SAFETY REQUIREMENTS HAVE BEEN MET.

EQUIPMENT/MATERIAL RECEIVED TODAY TO BE INCORPORATED IN JOB (INDICATE SCHEDULE ACTIVITY NUMBER)

Schedule Activity No.	Submittal #	Definable Feature of Work and Description of Equipment/Material Received

CONSTRUCTION AND PLANT EQUIPMENT ON JOB SITE TODAY. INDICATE HOURS USED AND SCHEDULE ACTIVITY NUMBER.

Schedule Activity No.	Owner	Definable Feature of Work and Description of Construction Equipment Used Today (incl Make and Model)	Hours Used

Schedule Activity No.	DEFINABLE FEATURE OF WORK AND REMARKS

CONTRACTOR/SUPERINTENDENT DATE

CONTRACTOR PRODUCTION REPORT

(CONTINUATION SHEET)

CONTRACT NO	TITLE AND LOCATION	DATE
		REPORT NO

WORK PERFORMED TODAY

Schedule Activity No.	DEFINABLE FEATURE OF WORK, WORK LOCATION AND DESCRIPTION	EMPLOYER	NUMBER	TRADE	HRS

Schedule Activity No.	DEFINABLE FEATURE OF WORK AND LIST SAFETY ACTIONS TAKEN TODAY/SAFETY INSPECTIONS CONDUCTED

EQUIPMENT/MATERIAL RECEIVED TODAY TO BE INCORPORATED IN JOB (INDICATE SCHEDULE ACTIVITY NUMBER)

Schedule Activity No.	Submittal #	Definable Feature of Work and Description of Equipment/Material Received

CONSTRUCTION AND PLANT EQUIPMENT ON JOB SITE TODAY. INDICATE HOURS USED AND SCHEDULE ACTIVITY NUMBER.

Schedule Activity No.	Owner	Definable Feature of Work and Description of Construction Equipment Used Today (incl Make and Model)	Hours Used

Schedule Activity No.	DEFINABLE FEATURE OF WORK AND REMARKS

INCLUDE ALL PERSONNEL WORK HOURS IN THE WORK PERFORMED SECTION ON THIS SHEET
INTO THE FRONT CONTRACTOR PRODUCTION REPORT

Instructional Notes for Preparatory Phase Checklist

Each DFOW that is in the Preparatory Phase shall have this checklist filled out for it. The checklist shall be identified by terminology consistent with the construction schedule. This checklist shall accompany the submission of to the Contractor QC Report of the same date.

a. Specification Section, date of report, and contract number shall be filled out. Duplicate this information in the header of the second page of the report.
b. Definable Feature of Work, Schedule Activity No. and Index # entry and format will match entry in the Preparatory Phase section of the Contractor QC Report
c. Personnel Present: Indicate the number of hours of advance notice that was given to the Government Representative and indicate (Yes/No checkboxes) whether or not the Government Rep was notified. Indicate the Names of Preparatory Phase Meeting attendees, their position and company/government they are with.
d. Submittals: Indicate if submittals have been approved (Yes/No checkboxes), if no indicate what has not been submitted. Are materials on hand (Yes/No checkboxes) and if not, what items are missing. Check delivered material/equipment against approved submittals and comment as required.
e. Material Storage: Indicate if materials/equipment is stored properly (Yes/No checkboxes) and if not, what action is/was taken.
f. Specifications: Review and comment on Specification Paragraphs that describe the material/equipment, procedure for accomplishing the work and clarify any differences.
g. Preliminary Work & Permits: Ensure preliminary work is in accordance with the Contract documents and necessary permits are on file, if not, describe the action taken.
h. Testing: Identify who performs tests, the frequency, and where tests are to occur. Review the testing plan, report abnormalities, and if the test facilities have been approved.
i. Safety: Indicate if the activity hazard analysis has been approved (Yes/No checkboxes) and comment on the review of the applicable portions of the EM 385-1-1.
j. Meeting Comments: Note comments and remarks during the Preparatory Phase Meeting that was not addressed in previous sections of this checklist.
k. Other Items or Remarks: Note any other remarks or items that were a result of the Preparatory Phase.
l. QC Manager will sign and date the checklist.

PREPARATORY PHASE CHECKLIST

(CONTINUED ON SECOND PAGE)

CONTRACT NO	DEFINABLE FEATURE OF WORK	SPEC SECTION	DATE
		SCHEDULE ACT NO.	INDEX #

PERSONNEL PRESENT

GOVERNMENT REP NOTIFIED _____ HOURS IN ADVANCE: YES ☐ NO ☐

NAME	POSITION	COMPANY/GOVERNMENT

SUBMITTALS

REVIEW SUBMITTALS AND/OR SUBMITTAL REGISTER. HAVE ALL SUBMITTALS BEEN APPROVED? YES ☐ NO ☐

IF NO, WHAT ITEMS HAVE NOT BEEN SUBMITTED? _____

ARE ALL MATERIALS ON HAND? YES ☐ NO ☐

IF NO, WHAT ITEMS ARE MISSING? _____

CHECK APPROVED SUBMITTALS AGAINST DELIVERED MATERIAL. (THIS SHOULD BE DONE AS MATERIAL ARRIVES.)

COMMENTS: _____

MATERIAL STORAGE

ARE MATERIALS STORED PROPERLY? YES ☐ NO ☐

IF NO, WHAT ACTION IS TAKEN? _____

SPECIFICATIONS

REVIEW EACH PARAGRAPH OF SPECIFICATIONS. _____

DISCUSS PROCEDURE FOR ACCOMPLISHING THE WORK. _____

CLARIFY ANY DIFFERENCES. _____

PRELIMINARY WORK & PERMITS

ENSURE PRELIMINARY WORK IS CORRECT AND PERMITS ARE ON FILE.

IF NOT, WHAT ACTION IS TAKEN? _____

PREPARATORY PHASE CHECKLIST

(CONTINUED FROM FIRST PAGE)

CONTRACT NO	DEFINABLE FEATURE OF WORK	SPEC SECTION	DATE
		SCHEDULE ACT NO.	INDEX #

TESTING

IDENTIFY TEST TO BE PERFORMED, FREQUENCY, AND BY WHOM.

WHEN REQUIRED?

WHERE REQUIRED?

REVIEW TESTING PLAN.

HAS TEST FACILITIES BEEN APPROVED?

SAFETY

ACTIVITY HAZARD ANALYSIS APPROVED? YES ☐ NO ☐

REVIEW APPLICABLE PORTION OF EM 385-1-1.

MEETING COMMENTS

NAVY PWD/ROICC COMMENTS DURING MEETING.

OTHER ITEMS OR REMARKS

OTHER ITEMS OR REMARKS:

QC MANAGER DATE

Instructional Notes for Initial Phase Checklist

Each DFOW that is in the Initial Phase shall have this checklist filled out for it. The checklist shall be identified by terminology consistent with the construction schedule. This checklist shall accompany the submission of the Contractor Quality Control Report of the same date.

a. Specification Section, date of report, and contract number shall be entered.
b. Definable Feature of Work, Schedule Activity No. and Index # entry and format will match entry in the Initial Phase section of the Contractor QC Report.
c. Personnel Present: Indicate the number of hours of advance notice that was given to the Government Representative and indicate (Yes/No checkboxes) whether or not the Government Rep was notified. Indicate the Names of Initial Phase Meeting attendees, their position and company/government they are with.
d. Procedure Compliance: Comment on compliance with procedures identified at Preparatory Phase of Control and assurance that work is in accordance with contract documents.
e. Preliminary Work: Ensure preliminary work being placed is in compliance and if not, what action is/was taken.
f. Workmanship: Identify where initial work is located; if a sample panel is required (Yes/No checkboxes); is the initial work the sample (Yes/No checkboxes); and if Yes, describe the panel location and precautions taken to preserve the sample.
g. Resolution: Comment on any differences and the resolutions reached.
h. Check Safety: Comment on the safety review of the job conditions.
i. Other: Note any other remarks or items that were a result of the Initial Phase.
j. QC Manager will sign and date the checklist.

INITIAL PHASE CHECKLIST

		SPEC SECTION	DATE
CONTRACT NO	DEFINABLE FEATURE OF WORK	SCHEDULE ACT NO.	INDEX #

PERSONNEL PRESENT

GOVERNMENT REP NOTIFIED _____ HOURS IN ADVANCE: YES ☐ NO ☐

NAME	POSITION	COMPANY/GOVERNMENT

PROCEDURE COMPLIANCE

IDENTIFIY FULL COMPLIANCE WITH PROCEDURES IDENTIFIED AT PREPARATORY. COORDINATE PLANS, SPECIFICATIONS, AND SUBMITTALS.

COMMENTS:

PRELIMINARY WORK

ENSURE PRELIMINARY WORK IS COMPLETE AND CORRECT. IF NOT, WHAT ACTION IS TAKEN?

WORKMANSHIP

ESTABLISH LEVEL OF WORKMANSHIP.

WHERE IS WORK LOCATED?

IS SAMPLE PANEL REQUIRED? YES ☐ NO ☐

WILL THE INIITAL WORK BE CONSIDERED AS A SAMPLE? YES ☐ NO ☐

(IF YES, MAINTAIN IN PRESENT CONDITION AS LONG AS POSSIBLE AND DESCRIBE LOCATION OF SAMPLE)

RESOLUTION

RESOLVE ANY DIFFERENCES.

COMMENTS:

CHECK SAFETY

REVIEW JOB CONDITIONS USING EM 385-1-1 AND JOB HAZARD ANALYSIS

COMMENTS:

OTHER

OTHER ITEMS OR REMARKS

QC MANAGER DATE

Instructional Notes for Testing Plan and Log

As tests are performed, the QC Manager shall record on the "Testing Plan and Log" the date the test was conducted, the date the test results were forwarded to the Contracting Officer, remarks and acknowledgement that an accredited or Contracting Officer approved testing laboratory was used. Attach a copy of the updated "Testing Plan and Log" to the last daily Contractor QC Report of each month.

TESTING PLAN AND LOG

CONTRACT NUMBER			CONTRACT TITLE AND LOCATION							CONTRACTOR	
SPECIFICATION SECTION AND PARAGRAPH NUMBER	SCHEDULE ACTIVITY ID	TEST REQUIRED	ACCREDITED/ APPROVED LAB		SAMPLED BY	TESTED BY	LOCATION OF TEST		DATE COMPLETED	DATE FORWARDED TO CONTR. OFF.	REMARKS
			YES	NO			ON SITE	OFF SITE			

Instructional Notes for Rework Item List

The QC Manager shall maintain a list of work that does not comply with the Contract, identifying what items need to be reworked, the date the item was originally discovered, the date the item will be corrected by, and the date the item was corrected. There is no requirement to report a rework item that is corrected the same day it is discovered. Attach a copy of the "Rework Items List" to the last daily Contractor QC Report of each month. The Contractor shall be responsible for including on this list items needing rework including those identified by the Contracting Officer.

REWORK ITEMS LIST

Contract No. and Title:

Contractor:

NUMBER	DATE IDENTIFIED	DEFINABLE FEATURE OF WORK AND DESCRIPTION	CONTRACT REQUIREMENT (Spec. Section and Par. No., Drawing No. and Detail No., etc.)	ACTION TAKEN BY QC MANAGER	RESOLUTION	DATE COMPLETED

CONSTRUCTION CONTRACT NON-COMPLIANCE NOTICE (CCN) NAVFAC 4330/36

A. DESCRIPTION/PURPOSE

This form is used to notify construction Contractors of deficiencies and to record corrective action taken. It is drafted by QA personnel, signed by the appropriate Government representatives and delivered to the appropriate representative of the Construction Contractor who signs to acknowledge receipt of it.

B. PREPARATION INSTRUCTION

Contractor/Responsible Individual: Enter Construction Contractor's company name.
Contract Number and Title: Enter the number of the construction Contract, the title of the Contract."
Notice Number: Number notices sequentially by construction contract.
Date: Enter date of notice using Navy dating system; e.g., 11 Dec 2004
Spec Paragraph and/or Drawing Number: Enter appropriate reference to construction contract documents.
Reference: Enter applicable reference, if any, to shop drawings, certifications, QC Reports.
Contractor Reply by Date: Enter a date that the PWD/ROICC expects a reply from the Contractor.
Deficiency in Workmanship and/or Material: Enter brief narrative description of item not in compliance. Be specific.
Corrective Action Accomplished: Completed by Construction Contractor indicating corrective action to correct deficiency noted.
QA Representative: Signed by QA Representative.
CM: Signed by the Designated Government Representative for the particular construction Contract.
Contractor's Acknowledgement: Signed by the responsible individual.

C. GENERAL INSTRUCTIONS.

When the QA Rep notes a construction deficiency, the form should be completed listing only one deficiency on each notice. The QA Rep fills out the form, then sign and date the notice. The QA Rep then obtains the signature of the appropriate Government representative. After the Government representative signs the form, the QA Rep presents it to the QC Manager. The QC Manager should acknowledge receipt of the notice by signing.

After the Construction Contractor’s Representative signs the form, that person is given the original. When the item has been corrected, the Contractor should return the original with the corrective actions noted to the QA Rep. The form should be accepted only after the QA Rep is satisfied that the item is properly corrected.

If appropriate, the QA Rep shall take a photograph of the deficiency and attach a copy to the CCN.

E. CONTRACTOR REPLY DATE

Due with the daily QC Report for the day the deficiency was noted.

F. DISTRIBUTION

The original is given to the Contractor’s QC Manager or Superintendent so the corrective action can be recorded. When the original is received back from the Contractor indicating that corrective action has been taken the original is filed with the appropriate QC Report.

The QA Rep retains a copy with their files. It is used to follow up correction. At the close of each contract the QA Rep shall transfer all uncorrected deficiencies still remaining to the final inspection punch list. Payment deductions or appropriate retention of progress payments should be taken until all corrective actions are acceptable to the QA Rep.

CONSTRUCTION CONTRACT NON-COMPLIANCE NOTICE
NAVFAC 4330/36 (Rev. 3/03)

CONTRACTOR/RESPONSIBLE INDIVIDUAL	NOTICE NUMBER
CONTRACT NUMBER AND TITLE	DATE
SPECIFICATION PARAGRAPH AND/OR DRAWING NUMBER	CONTRACTOR REPLY BY DATE
REFERENCE (Shop Drawing, Certification, CQC Report Number, etc.)	

DEFICIENCY IN WORKMANSHIP AND/OR MATERIAL

CORRECTIVE ACTION ACCOMPLISHED (This block filled in by Contractor)

QA REPRESENTATIVE

NAME: TITLE:

DATE NOTED: SIGNATURE: _____

CM

NAME: TITLE:

DATE ISSUED: SIGNATURE: _____

CONTRACTOR'S ACKNOWLEDGMENT

NAME: TITLE:

DATE RCV'D: SIGNATURE: _____

This Notice does NOT authorize any work not included in the Contract and shall not constitute a basis for additional payment or time. If you are in disagreement with this Notice, notify the Contracting Officer immediately in writing.

DISTRIBUTION
Original - QC Manager or Superintendent (Original)
Copies to - Contractor's Home Office, QA Representative, Contract File

☐ Initial Report
☐ Follow-up Report
☐ Final Report

Contractor Significant Incident Report (CSIR)

1. General Information

Contracting Activity/ROICC Office:

Accident Classification:

☐ Injury ☐ Fatality ☐ Environment ☐ Procedural Issues ☐ Lessons Learned
☐ Illness ☐ Property Damage ☐ Other_____

Involving:

☐ Confined Space ☐ Equip/Mrt Ver/Mat Handling (Heavy Construction Equip.) ☐ Hazardous Material
☐ Crane and Rigging ☐ Equip/Mrt Ver/Mat Handling (Material Handling) ☐ Trenching/Excavation
☐ Diving ☐ Equip/Mrt Ver/Mat Handling (Man-Lift/Elevated Platform) ☐ Waterfront/Marine
☐ Demolition/Renovation ☐ Fall from Ladder ☐ Fall from Scaffold ☐ Other_____
☐ Electrical ☐ Fall from Roof ☐ Fire

2. Personal Information

Name (Last. First. MI):	**Age:**	**Sex:**

Job Title/Description:	**Employed By:**
Supervisor Name (Last, First, MI) & Title:	**Was the person trained to perform this activity/task?** ☐ **Yes** ☐ **No**
What type of training was received (OJT, classroom, etc)?	**Date of the most recent formal training and topics discussed?**

3. Witness Information

Witness #1: Name (Last, First, MI):	**Job Title/Description:**
Employed By:	**Supervisor Name (Last, First, MI):**
Witness #2: Name (Last, First, MI):	**Job Title/Description:**
Employed By:	**Supervisor Name (Last, First, MI):**

Additional Witnesses: ☐ **Yes** ☐ **No**
(List any additional witnesses on a separate sheet and attach.)

4. Contract Information

Type of Contract:

A/E BOS CLEAN Construction Design Build FSCC FSSC

JOC RAC Service Other_____

Contract Number & Title:	**Industrial Group & Industrial Type:**
Prime Contractor Name/Address/Phone & Fax No:	**Sub Contractor Name/Address/Phone & FAX No:**
Safety Manager (Last, First, MI):	**Safety Manager (Last, First, MI):**
Insurance Carrier:	**Insurance Carrier:**

5. Accident Description

Date of Accident:	**Time of Accident:**	**Exact Location of Accident:**

Describe the accident in detail in your words: ***(Use the back of page if you need additional space)***

Direct Cause(s) of Accident:

Indirect Cause(s) of Accident:

Action(s) taken to prevent re-occurrence or provide on-going corrective actions:

Corrective Action Beginning Date:	**Anticipated Completion Date:**

Personal Protective Equipment:

☐ Available and used ☐ Available and not used ☐ Not Required

☐ Not related to Mishap ☐ Wrong PPE for job

List PPE Used:

Type of Construction Equipment (Make, Model, Serial #, VIN#) Involved:

Was Hazardous Material Spilled/Released? ☐ **Yes** ☐ **No**

Please List Hazardous Material(s) Involved:

Who provided first aid or cleanup of mishap site?

Any blood-borne pathogen exposure, other than EMTs? ☐ **Yes** ☐ **No**

Who?

List OSHA and WM-385-1-1 standards that were violated:

Was site secured and witness statements taken immediately? ☐ **Yes** ☐ **No**

By Whom?

6. Injury Illness/Fatality Information

Severity of Injury/Illness:

- ☐ Fatality
- ☐ Lost Workday Case Involving Days Away From Work
- ☐ Temporary Disabillity
- ☐ Recordable Workday Case Involving Restricted Duty
- ☐ Permanent Total Disability
- ☐ Other Recordable Case
- ☐ Recordable First Aid Case
- ☐ Permanent Partial Disability
- ☐ Non-Recordable Case
- ☐ No Injury

Estimated Days Lost:	**Estimated Days Hospitalized:**	**Estimated Days Restricted Duty:**

List Primary Body Part Affected:	**List Other Body Part(s) Affected:**

Nature of Injury/Illness for Primary Body Part (Examples: Amputation, Burn, Hernia):

Type of Accident (Examples: Fall same level, Lifting, Bitten, Exerted):

Source of Accident (Examples: Crane, Carbon Monoxide, Ladder, Welding Equipment):

7. Casual Factors *(Explain answers on supplementary sheet)*

• **Design – Design of facility, workplace, or equipment was a factor?**	☐ **Yes**	☐ **No**
• **Inspection/Maintenance – Inspection & Maintenance procedures were a factor?**	☐ **Yes**	☐ **No**
• **Persons Physical Condition – In your opinion, the physical condition of the person was a factor?**	☐ **Yes**	☐ **No**
• **Operation Procedures – Operating procedures were a factor?**	☐ **Yes**	☐ **No**
• **Job Practices – One or more job safety/health practices not being followed when the accident occurred contributed to the accident?**	☐ **Yes**	☐ **No**
• **Human Factors – One or more human factors, such as a person's size or strength contributed to the accident?**	☐ **Yes**	☐ **No**
• **Environmental Factors – Heat, cold, dust, sun, glare, etc., contributed to the accident?**	☐ **Yes**	☐ **No**
• **Chemical and Physical Agent Factors – Exposure to chemical agents, such as dust, fumes, mist, vapors, or physical agents such as noise, radiation, etc., contributed to the accident?**	☐ **Yes**	☐ **No**
• **Office Factors – Office setting such as lifting office furniture, carrying, stooping, contributed to the accident?**	☐ **Yes**	☐ **No**
• **Support Factors – Inappropriate tools/resources were provided to perform the task?**	☐ **Yes**	☐ **No**
• **PPE – Improper selection, use or maintenance of PPE contributed to the accident?**	☐ **Yes**	☐ **No**
• **Drugs/Alcohol – In your opinion, were drugs or alcohol a factor?**	☐ **Yes**	☐ **No**
• **Job Hazard Analysis – The lack of an adequate (IAW-EM-385-1-1 Sec 01.A) activity hazard analysis was a contributing factor.**	☐ **Yes**	☐ **No**
• **Job Hazard Analysis – JHA was not site specific and/or did not address the type of work/operations performed when the mishap occurred.**	☐ **Yes**	☐ **No**
• **Management – A lack of adequate supervision contributed to the accident.**	☐ **Yes**	☐ **No**
• **Management – Inadequate information was provided at pre con meeting.**	☐ **Yes**	☐ **No**

8. OSHA Information			
Date OSHA was Notified:	**Date(s) of Investigation:**	**Date of citation:** ***(Attach Copy)***	**Dollar amount of Penalties:**

9. Report Preparer	
Name (Last, First, MI):	**Date of Report:**
Title: **Employer:** **Phone #:**	**Signature:**

CONTRACTOR SIGNIFICANT INCIDENT REPORT (CSIR) INSTRUCTIONS

Complete Sections Appropriate to Incident (Rev. 06/02).

NOTE: THE ATTACHED CSIR FORM IS TO BE USED BY CONTRACTORS TO RECORD THE RESULTS OF THEIR ACCIDENT/INCIDENTS INVESTIGATIONS AND SHALL BE PROVIDED TO THE CONTRACTING OFFICER WITHIN THE REQUIRED TIMEFRAMES.

GENERAL. Complete a separate report for each person who was injured in the accident. A report needs to be completed for all OSHA recordable accidents, property damage in excess of $2000.00 (This amount is for record purposes only. GOV is not required to enter property damage reports into FAIR database if it is less than $10,000.00.), WHE accidents, or near miss/high visibility mishaps. Please type or print legibly. Appropriate items shall be marked with an "X" in box(es), non-applicable sections shall be marked "N/A". If additional space is needed, provide the information on a separate sheet of paper and attach to the completed form.

Mark the report:
INITIAL – If this form is being used as initial notification of a Fatality or High Visibility Mishap. The initial form is due within 4 hours of a serious accident. A form marked 'Follow-up' or 'Final' is required within 5 days.
FOLLOW-UP – If you are providing additional information on a report previously submitted.
FINAL – If you are providing a completed report and expect no changes.

SECTION 1 – GENERAL INFORMATION

CONTRACTING ACTIVITY/ROICC OFFICE - Enter the name and address of the Contracting Office administering the contract under which the mishap took place (e.g. ROICC MCBH, ROICC NORFOLK, PWC GUAM, etc.).

ACCIDENT CLASSIFICATION - INJURY/ILLNESS/FATALITY/PROPERTY DAMAGE/-PROCEDURAL ISSUES/-ENVIRONMENTAL/LESSONS LEARNED/OTHER – Mark the appropriate block(s) if the incident resulted in any of these conditions.

INVOLVING - If the mishap involved any of the conditions listed under "Involving" mark the appropriate box(es). Specific questions associated with each of these conditions are available from the Contracting Officer to assist you in your investigation. When these questions are used they shall be attached as part of this report.

SECTION 2 - PERSONAL INFORMATION

NAME - Enter last name, first name, middle initial of person involved.
AGE - Enter age.
SEX - Enter M for Male and F for Female.
JOB TITLE/DESCRIPTION - Enter the job title/description assigned to the injured person (e.g. carpenter, laborer, surveyor, etc.).
EMPLOYED BY - Enter employment company name of the person involved.
SUPERVISOR'S NAME & TITLE - Enter name and title of the immediate supervisor.
WAS PERSON TRAINED TO PERFORM ACTIVITY/TASK? - For the purpose of this section "trained" means the person has been provided the necessary information (either formal and/or on-the-job (OJT) training) to competently perform the activity/task in a safe and healthful manner.
TYPE OF TRAINING - Indicate the specific type of training (classroom or on-the-job) that the injured person received before the accident happened.
DATE OF MOST RECENT FORMAL TRAINING/TOPICS DISCUSSED - Enter the month, day, and year of the last *formal* training completed that covered the activity/task being performed at the time of the accident. List topics that were discussed at the training identified above.

SECTION 3 - WITNESS INFORMATION

The following applies to Witness #1 and Witness #2:
WITNESS NAME - Enter last name, first name, middle initial of the witness.
JOB DESCRIPTION/TITLE - Enter the job title/description assigned to the witness (e.g. carpenter, laborer, surveyor, etc.).
EMPLOYED BY - Enter the name of the employment company of the witness.
SUPERVISORS NAME - Enter name of immediate supervisor of the witness.
ADDITIONAL WITNESSES - Provide same information, as above, for each witnesses. Use additional pages if necessary.

SECTION 4 - CONTRACTOR INFORMATION

TYPE OF CONTRACT - Mark appropriate box. A/E means architect/engineer. If "OTHER" is marked, specify type of contract on line provided.
CONTRACT NUMBER/TITLE - Enter complete contract number and tile of prime contract (e.g. N62477-85-C-0100, 184 Pearl City Hsg. Revitalization).
CONSTRUCTION INDUSTRIAL GROUP AND INDUSTRIAL TYPE – This is the type of construction that will be done at this project.

1. First, you must choose the Industrial Group. You have 4 choices to choose from: (**NOTE**! Review of the Industrial Types below and knowing what the projects scope of work is will assist you in deciding what the Industrial Group should be.)
   a. Buildings
   b. Heavy Industrial
   c. Infrastructure
   d. Light Industrial
2. Once you have chosen the Industrial Group, you now select the Industrial Type. You have multiple choices under each Group, chose the one you feel fits the project most closely because on most projects there won't be an exact match:
   a. Buildings:
      (1) Communications Ctr.
      (2) Dormitory/Hotel
      (3) High-rise Office
      (4) Hospital
      (5) Housing
      (6) Laboratory
      (7) Low-rise Office
      (8) Maintenance Facility
      (9) Parking Garage
      (10) Physical Fitness Ctr.
      (11) Restaurant/Nightclub
      (12) School
      (13) Warehouse
   b. Heavy Industrial:
      (1) Chemical Mfg.
      (2) Electrical (Generating)
      (3) Environmental
      (4) Metals Refining/Processing
      (5) Mining
      (6) Natural Gas Processing
      (7) Oil Exploration/Production
      (8) Oil Refining
      (9) Pulp and Paper
   c. Infrastructure:
      (1) Airport
      (2) Electrical Distribution
      (3) Flood Control
      (4) Highway
      (5) Marine Facilities
      (6) Navigation
      (7) Rail
      (8) Tunneling
      (9) Water/Wastewater
   d. Light Industrial:
      (1) Automotive Assembly/Mfg.
      (2) Consumer Products Mfg.
      (3) Foods
      (4) Microelectronics Mfg.
      (5) Office Products Mfg.
      (6) Pharmaceuticals Mfg.

CONTRACTOR'S NAME/ADDRESS/PHONE NUMBER
(1) PRIME - Enter the exact name (title of firm), address, phone and fax numbers of the prime contractor.
(2) SUBCONTRACTOR - Enter the exact name, address, phone and fax numbers of any subcontractor involved in the accident.

SAFETY MANAGER'S NAME
(1) PRIME - Enter the name of the prime contractor safety manager.
(2) SUBCONTRACTOR - Enter the name of the subcontractors safety manager.

INSURANCE CARRIER
(1) PRIME - Enter the exact name/title of the prime's insurance company. Policy number not required.
(2) SUBCONTRACTOR - Enter the exact name of the subcontractor's insurance company. Policy number not required.

SECTION 5 - ACCIDENT DESCRIPTION

DATE OF ACCIDENT - Enter the month, day, and year of accident.
TIME OF ACCIDENT - Enter the local time of accident in military time. Example: 14:30 hrs (not 2:30 p.m.).
EXACT LOCATION OF ACCIDENT - Enter facts needed to locate the accident scene (installation/project name, building/room number, street, direction and distance from closest landmark, etc.).
DESCRIBE THE ACCIDENT IN DETAIL. Fully describe the accident in the space provided. If property damage involved, give estimated dollar amount of damage and/or repair costs involved. If additional space is needed continue on a separate sheet and attach to this report. Give the sequence of events that describe what happened leading up to and including the accident. Fully identify personnel and equipment involved and their role(s) in the accident. Ensure that relationships between personnel and

equipment are clearly specified. Ensure questions below regarding direct cause(s), indirect cause(s), and actions taken are answered. **NOTE!** Review questions in Section 7 below before completing.
DIRECT CAUSE(S) - The direct cause is that single factor which most directly lead to the accident. See examples below.
INDIRECT CAUSE(S) - Indirect cause are those factors, which contributed to, but did not directly initiate the occurrence of the accident.

Examples for Direct and Indirect Cause:
1. Employee was dismantling scaffold and fell 12 feet from unguarded opening.
Direct cause: Failure to provide fall protection at elevation
Indirect causes: Failure to enforce safety requirements: improper training/motivation of employee (possibility that employee was not knowledgeable of fall protection requirements or was lax in his attitude toward safety); failure to ensure provision of positive fall protection whenever elevated; failure to address fall protection during scaffold dismantling in phase hazard analysis.

2. Private citizen had stopped his vehicle at intersection for red light when vehicle was struck in rear by contractor vehicle. (note contractor vehicles was in proper safe working condition.)
Direct cause: Failure of contractor driver to maintain control of and stop contractor vehicle within safe distance.
Indirect cause: Failure of employee to pay attention to driving (defensive driving).

ACTION(S) TAKEN TO PREVENT RE-OCCURRENCE OR PROVIDE ON-GOING CORRECTIVE ACTIONS. Fully describe all the actions taken, anticipated, and recommended to eliminate the cause(s) and prevent reoccurrence of similar accidents/illnesses. Continue on back or additional sheets of paper if necessary to fully explain and attach to the complete report form.
CORRECTIVE ACTION DATES -
(1) Beginning - Enter the date when the corrective action(s) identified above will begin.
(2) Anticipated Completion - Enter the date when the corrective action(s) identified above will be completed.
PERSONAL PROTECTIVE EQUIPMENT (PPE) - Mark appropriate box(es) and list PPE which was being used by the injured person at the time of the accident (e.g. protective clothing, shoes, glasses, goggles, respirator, safety belt, harness, etc.)
TYPE OF CONTRACTOR EQUIPMENT - Enter the Serial Number, Model Number and specific type of equipment involved in the mishap (e.g. dump truck (off highway), crane (rubber tire), pump truck (concrete), etc.).
WAS HAZARDOUS MATERIAL SPILLED/RELEASED? - Mark appropriate block and list name(s) of any reportable quantities of hazardous materials spilled/released during the mishap.
WHO PROVIDED FIRST AID OR CLEAN-UP OF MISHAP SITE? - List name(s) of individual(s) and employer, if known.
ANY BLOOD-BORNE PATHOGEN EXPOSURE, OTHER THAN EMT? - Mark appropriate block and list name(s) of individual(s) and employer, if known.
LIST OSHA AND/OR EM 385-1-1 STANDARDS THAT WERE VIOLATED. - Self explanatory.
WAS SITE SECURED AND WITNESS STATEMENT TAKEN IMMEDIATELY? - Mark appropriate block and list by whom.

SECTION 6 - INJURY/ILLNESS/FATALITY INFORMATION

SERVERITY OF INJURY/ILLNESS – Mark appropriate box.
ESTIMATED DAYS LOST - Enter the estimated number of workdays the person will lose from work. Update when final data is known.
ESTIMATED DAYS HOSPITALIZED - Enter the estimated number of workdays the person will be hospitalized. Update when final data is known.
ESTIMATED DAYS RESTRICTED DUTY - Enter the estimated number of workdays the person, as a result of the accident, will not be able to perform all of their regular duties. Update when final data is known.
BODY PART(S) AFFECTED - Enter the most appropriate primary and when applicable, secondary, etc. body part(s) affected (e.g. arm: wrist: abdomen: single eye; jaw : both elbows: second finger: great toe: collar bone: kidney, etc.).
NATURE OF INJURY/ILLNESS FOR PRIMARY BODY PART - Enter the most appropriate nature of injury/illness (e.g. amputation, back strain, dislocation, laceration, strain, asbestosis, food poisoning, heart conditions, etc.).
TYPE AND SOURCE OF INJURY/ILLNESS - Type and Source Codes are used to describe what caused the incident.
(1) TYPE Code stands for an "Action" (Example: Worker, installing conduit, lost his balance and fell five feet from a ladder. Type Code: Fell different levels".) Select the most appropriate Type of injury from the list below:

TYPE OF INJURY/ILLNESS

STRUCK BY/AGAINST	CONTACTED CONTACTED WITH (INJURED PERSON MOVING) CONTACTED BY (OBJECT WAS MOVING)
FELL, SLIPPED, TRIPPED SAME LEVEL/DIFFERENT LEVEL/NO FALL	EXERTED LIFTED, STRAINED BY (SINGLE ACTION) STRESSED BY (REPEATED ACTION)
CAUGHT ON/IN/BETWEEN	EXPOSED INHALED/INGESTED/ABSORBED/EXPOSED TO
PUNCTURED, LACERATED PUNCTURED BY/CUT BY/STUNG BY/BITTEN BY	TRAVELING IN

(2) SOURCE Code stands for an "object or substance." (Example: Worker, installing conduit, lost his balance and fell five feet from a ladder. Source Code: "Ladder".) Select the most appropriate Source of injury from the list below:

SOURCE OF INJURY/ILLNESS

BUILDING OR WORKING AREA WALKING/WORKING AREA STAIRS/STEPS LADDER FURNITURE BOILER/PRESSURE VESSEL EQUIPMENT LAYOUT WINDOWS/DOORS ELECTRICITY	DUST, VAPOR, ETC. DUST (SILICA, COAT, ETC.) FIBERS ASBESTOS GASES CARBON MONOXIDE MIST, STEAM, VAPOR, FUME WELDING FUMES PARTICLES (UNIDENTIFIED)
ENVIRONMENT CONDITION TEMPERATURE EXTREME (INDOOR) WEATHER (ICE, RAIN, HEAT, ETC.) FIRE, FLAME, SMOTE (NOT TABACCO) NOISE RADIATION LIGHT VENTILATION TOBACCO SMOKE STRESS (EMOTIONAL) CONFINED SPACE	CHEMICAL, PLASTIC, ETC. DRY CHEMICAL - CORROSIVE DRY CHEMICAL - TOXIC DRY CHEMICAL - EXPLOSIVE DRY CHEMICAL - FLAMMABLE LIQUID CHEMICAL - CORROSIVE LIQUID CHEMICAL - TOXIC LIQUID CHEMICAL - EXPLOSIVE LIQUID CHEMICAL - FLAMMABLE PLASTIC WATER MEDICINE
MACHINE OR TOOL HAND TOOL (POWERED: SAW, GRINDER, ETC.) HAND TOOL (NON POWERED) MECHANCIAL POWER TRANSMISSION APPARATUS GUARD, SHIELD (FIXED, MOVEABLE, INTERLOCK) VIDEO DISPLAY TERMINAL PUMP, COMPRESSOR, AIR PRESSURE TOOL HEATING EQUIPMENT WELDING EQUIPMENT	INANIMATE OBJECT BOX, BARREL, ETC. PAPER METAL ITEM, MINERAL NEEDLE GLASS SCRAP, TRASH, WOOD FOOD CLOTHING, APPAREL, SHOES
MACHINE OR TOOL HAND TOOL (POWERED: SAW, GRINDER, ETC.) HAND TOOL (NON POWERED) MECHANCIAL POWER TRANSMISSION APPARATUS GUARD, SHIELD (FIXED, MOVEABLE, INTERLOCK) VIDEO DISPLAY TERMINAL PUMP, COMPRESSOR, AIR PRESSURE TOOL HEATING EQUIPMENT WELDING EQUIPMENT	INANIMATE OBJECT BOX, BARREL, ETC. PAPER METAL ITEM, MINERAL NEEDLE GLASS SCRAP, TRASH, WOOD FOOD CLOTHING, APPAREL, SHOES
VEHICLE AS DRIVER OF PRIVATELY OWNED, RENTAL VEH. AS PASSENGER OF PRIVATELY OWNED, RENTAL VEH. DRIVER OF GOVERNMENT VEHICLE PASSENGER OF GOVERNMENT VEHICLE COMMON CARRIER (AIRLINE, BUS, ETC.) AIRCRAFT (NOT COMMERCIAL) BOAT, SHIP, BARGE	ANIMATE OBJECT DOG OTHER ANIMAL PLANT INSECT HUMAN (VIOLENCE) HUMAN (COMMUNICABLE DISEASE) BACTERIA, VIRUS (NOT HUMAN CONTACT)
MATERIAL HANDLING EQUIPMENT EARTHMOVER (TRACTOR, BACKHOE, ETC.) CONVEYOR (FOR MATERIAL AND EQUIPMENT) ELEVATOR, ESCALATOR, PERSONNEL HOIST HOIST, SLING CHAIN, JACK CRANE FORKLIFT HANDTRUCK , DOLLY	PERSONAL PROTECTIVE EQUIPMENT PROTECTIVE CLOTHING, SHOES, GLASSES, GOGGLES RESPIRATOR, MASK DIVING EQUIPMENT SAFETY BELT, HARNESS PARACHUTE

SECTION 7 - CAUSAL FACTORS

Review thoroughly. Answer each question by marking the appropriate block. **NOTE!** If any answer is yes, explain in section 5 above.

(1) **DESIGN** - Did inadequacies associated with the building or work site play a role? Would an improved design or layout of the equipment or facilities reduce the likelihood of similar accidents? Were the tools or other equipment designed and intended for the task at hand?

(2) **INSPECTION/MAINTENANCE** - Did inadequately or improperly maintained equipment, tools, workplace, etc., create or worsen any hazards that contributed to the accident? Would better equipment, facility, work site or work activity inspections have helped avoid the accident?
(3) **PERSONS PHYSICAL CONDITION** - Do you feel that the accident would probably not have occurred if the employee was in "good" physical condition? If the person involved in the accident had been in better physical condition, would the accident have been less severe or avoided altogether? Was overexertion a factor?
(4) **OPERATION PROCEDURES** - Did lack of or inadequacy within established operating procedures contribute to the accident? Did any aspect of the procedures introduce any hazard to, or increase the risk associated with the work process? Would establishment or improvement of operating procedures reduce the likelihood of similar accidents?
(5) **JOB PRACTICES** - Were any of the provision of the Safety and Health Requirements Manual (EM 385-1-1) violated? Was the task being accomplished in a manner which was not in compliance with an established job hazard analysis or activity hazard analysis? Did any established job practice (including EM 385-1-1) fail to adequately address the task or work process? Would better job practices improve the safety of the task?
(6) **HUMAN FACTORS** - Was the person under undue stress (either internal or external to the job)? Did the task tend toward overloading the capabilities of the person: i.e., did the job require tracking and reacting to many external inputs such as displays, alarms, or signals? Did the arrangement of the workplace tend to interfere with efficient task performance? Did the task require reach strengths, endurance, agility, etc., at or beyond the capabilities of the employee? Was the work environment ill-adapted to the person? Did the person need more training, experience, or practice in doing the task? Was the person inadequately rested to perform safely?
(7) **ENVIRONMENTAL FACTORS** - Did any factors such as moisture, humidity, rain, snow, sleet, hail, ice, fog, cold, heat, sun temperature changes, wind, tides, floods, currents, terrain; dust, mud, glare, pressure changes, lighting, etc., play a part in the accident?
(8) **CHEMICAL AND PHYSICAL AGENT FACTORS** - Did exposure to chemical agents (either single shift exposure or long-term exposure such as dusts, fibers, (asbestos, etc.), silica, gases (carbon, monoxide, chlorine, etc.), mists, steam, vapors, fumes, smoke, other particulates, liquid or dry chemicals that are corrosive, toxic, explosive or flammable, by-products of combustion or physical agents such as noise, ionizing radiation, non-ionizing radiation (UV radiation created during welding, etc.) contribute to the accident/incident?
(9) **OFFICE FACTORS** - Did the fact that the accident occurred in an office setting or to an office worker have a bearing on its cause? For example, office workers tend to have less experience and training in performing tasks such as lifting office furniture. Did physical hazards within the office environment contribute to the hazard?
(10) **SUPPORT FACTORS** - Was the person using an improper tool for the job? Was inadequate time available or utilized to safely accomplish the task? Were less than adequate personnel resources (in terms of employee skills, number of workers, and adequate supervision) available to get the job done properly? Was funding available, utilized and adequate to provide proper tools, equipment, personnel, site preparation, etc.
(11) **PERSONAL PROTECTIVE EQUIPMENT** - Did the person fail to use appropriate personal protective equipment (gloves, eye protection, hard-toed shoes, respirator, etc) for the task or environment? Did protective equipment provided or worn fail to provide adequate protection from the hazard(s)? Did lack of or inadequate maintenance of protective gear contribute to the accident?
(12) **DRUGS/ALCOHOL** - Is there any reason to believe the person's mental or physical capabilities, judgment, etc., were impaired or altered by the use of drugs or alcohol? Consider the effects of prescription medicine and over the counter medications as well as illicit drug use. Consider the effect of drug or alcohol induced "hangovers".
(13) **JOB/ACTIVITY HAZARD ANALYSIS** - Was a written Job/Activity Analysis completed for the task being performed at the time of the accident? If one was made, did it address the hazard adequately or does it need to be updated? If none made, will one be made? These may also need to be addressed in the Corrective Actions Taken section. Mark the appropriate box. If one was made, attach a copy of the analysis to the report.
(14) **MANAGEMENT** - Did the lack of supervisor or management support play a part in the mishap? Mark the appropriate box.

SECTION - 8 OSHA INFORMATION - Complete this section if applicable

SECTION 9 - REPORT PREPARER

Providing a completed CSIR to the Contracting Officer is the PRIME CONTRACTOR'S RESPONSIBILITY. Enter the name, date of report, title, employer, phone number and signature of person completing the accident report and provide it to the Contracting Officer, or his representative, responsible for oversight of that contractor activity. **NOTE!** If prepared by other than the Prime Contractor, a person employed by the Prime Contractor must sign that they have reviewed and concur with the report and it's findings (e.g. company owner, project supervisor/foreman, Safety Officer, etc.).

CONTRACTOR SITE SAFETY ASSESSMENT

ROICC OFFICE: _____ **DATE:** _____

CONTRACTOR: _____

CONTRACT TITLE: _____ **CONTRACT % COMPLETE:** _____

CONTRACTOR SUPERINTENDENT: _____

CATEGORY:

PREPARATORY PHASE (Planning)	(Yes)	(No)	(N/A)	1) Activity Hazard Analysis performed and used on the site for each definable feature of work?	
	(Yes)	(No)	(N/A)	2) Are weekly safety meetings and indoctrination held on site and documented for all workers?	
Comments/Notes:	(Yes)	(No)	(N/A)	3) Is the submitted safety plan on site and in use?	
	(Yes)	(No)	(N/A)	4) Is the Activity Hazard Analysis reviewed during the preparatory inspection?	
	(Yes)	(No)	(N/A)	5) Hazardous materials program in place with MSDS sheets on site and maintained?	
	(Yes)	(No)	(N/A)	6) EM 385-1-1 available on the site?	
	(Yes)	(No)	(N/A)	7) Other? Extra Credit?	
OFFICE TRAILER GENERAL	(Yes)	(No)	(N/A)	8) Are office and storage trailers anchored?	
	(Yes)	(No)	(N/A)	9) Are emergency phone numbers posted?	
Comments/Notes:	(Yes)	(No)	(N/A)	10) Is a phone available?	
	(Yes)	(No)	(N/A)	11) First aid log maintained (contractors must use OSHA Form 300)?	
	(Yes)	(No)	(N/A)	12) Toilet facilities available?	
	(Yes)	(No)	(N/A)	13) Site posted "HARD HAT AREA," "NOISE HAZARD," "CONSTRUCTION AREA," etc., as required?	
	(Yes)	(No)	(N/A)	14) Garbage cans and dumpsters available?	
	(Yes)	(No)	(N/A)	15) Jobsite cleaned daily?	
	(Yes)	(No)	(N/A)	16) Is traffic control around site adequate?	
	(Yes)	(No)	(N/A)	17) Other? Extra Credit?	
FIRE PREVENTION	(Yes)	(No)	(N/A)	18) Are fire extinguishers available, fully charged, and easily visible within 75 feet for low hazard areas?	
Comments/Notes:	(Yes)	(No)	(N/A)	19) Is fuel stored in proper containers?	
	(Yes)	(No)	(N/A)	20) Are hot work permits being obtained?	
	(Yes)	(No)	(N/A)	21) Are fire watches provided?	
	(Yes)	(No)	(N/A)	22) Are gas cylinders stored upright and secured with chain or rope?	
	(Yes)	(No)	(N/A)	23) Is Housekeeping acceptable?	
	(Yes)	(No)	(N/A)	24) Other? Extra Credit?	
SCAFFOLD SAFETY	(Yes)	(No)	(N/A)	25) Are daily scaffold inspections performed by designated competent person?	
	(Yes)	(No)	(N/A)	26) Planks overlapped not less than 6" or more than 12" over end supports with toe boards in place?	
Comments/Notes:	(Yes)	(No)	(N/A)	27) Tubing pinned properly and all cross bracing in place?	
	(Yes)	(No)	(N/A)	28) If scaffold height is 4X smallest base dimension, is system secured to structure?	
	(Yes)	(No)	(N/A)	29) All guardrails are in place?	
	(Yes)	(No)	(N/A)	30) Full work platform at each working level with no cracks/splits?	
	(Yes)	(No)	(N/A)	31) Safe access provided to each working level?	
	(Yes)	(No)	(N/A)	32) Scaffold and components not overloaded?	
	(Yes)	(No)	(N/A)	33) Is scaffold system plumb and level?	
	(Yes)	(No)	(N/A)	34) Suspended scaffold systems using independent personal fall arrest system?	
	(Yes)	(No)	(N/A)	35) Other? Extra Credit?	
FALL PROTECTION	(Yes)	(No)	(N/A)	36) Is a full body harness used where required?	
	(Yes)	(No)	(N/A)	37) Tied off at all times to structural element capable of supporting 5,000 lbs/person?	
Comments/Notes:	(Yes)	(No)	(N/A)	38) Is protection provided for all personnel working in areas where they could fall 6' or more?	
	(Yes)	(No)	(N/A)	39) Are employees trained for fall protection systems in use?	
	(Yes)	(No)	(N/A)	40) Does the contractor have a certified competent person?	
	(Yes)	(No)	(N/A)	41) Have standard guardrails been provided where required?	
	(Yes)	(No)	(N/A)	42) Have horizontal life lines been designed and installed under supervision of a qualified person?	
	(Yes)	(No)	(N/A)	43) Other? Extra Credit?	

CATEGORY:

LADDER SAFETY	(Yes)	(No)	(N/A)	44) Do ladders extend 3' above landing platform and tied to structure?	
Comments/Notes:	(Yes)	(No)	(N/A)	45) Are ladders used with hand tools only?	
	(Yes)	(No)	(N/A)	46) Are ladder base distances from structure 1/4 height?	
	(Yes)	(No)	(N/A)	47) Are floor openings either covered or surrounded by a guardrail?	
	(Yes)	(No)	(N/A)	48) Electricians not using portable "conductive" ladders?	
	(Yes)	(No)	(N/A)	49) Stairways provided on all structures over 20' during construction and supplied with guardrail?	
	(Yes)	(No)	(N/A)	50) Portable step ladders over 20' not used on the site?	
	(Yes)	(No)	(N/A)	51) Are ladders properly used?	
	(Yes)	(No)	(N/A)	52) Other? Extra Credit?	
EXCAVATIONS	(Yes)	(No)	(N/A)	53) Does excavation over 4' deep have a ladder within 25' and two means of egress?	
Comments/Notes:	(Yes)	(No)	(N/A)	54) Has proper slope or trench box/shoring been provided?	
	(Yes)	(No)	(N/A)	55) Is water controlled/removed?	
	(Yes)	(No)	(N/A)	56) Is excavated material at least 2' back from trench edge?	
	(Yes)	(No)	(N/A)	57) Is excavation barricaded, etc., to prevent workers and public from falling into trench/hole?	
	(Yes)	(No)	(N/A)	58) In locations of known or suspected contamination, is excavation atmosphere monitored?	
	(Yes)	(No)	(N/A)	59) Does contractor have certified competent person on site?	
	(Yes)	(No)	(N/A)	60) Other? Extra Credit?	
ELECTRICAL	(Yes)	(No)	(N/A)	61) Are temporary power panels and receptacles protected from weather?	
Comments/Notes:	(Yes)	(No)	(N/A)	62) Are GFCI's in use for site tools ?	
	(Yes)	(No)	(N/A)	63) Are temporary lights rigged and secured to supports properly, and with covers?	
	(Yes)	(No)	(N/A)	64) If overhead power lines are in area, are operations maintaining required distance or isolation?	
	(Yes)	(No)	(N/A)	65) Is lockout/tagout program in effect?	
	(Yes)	(No)	(N/A)	66) Has a sketch of proposed temporary power distribution been submitted/accepted before installing?	
	(Yes)	(No)	(N/A)	67) Other? Extra Credit?	
	(Yes)	(No)	(N/A)	68) Other? Extra Credit?	
CRANES	(Yes)	(No)	(N/A)	69) Has periodic inspection been performed prior to use on site IAW EM 385-1-1, App. H?	
Comments/Notes:	(Yes)	(No)	(N/A)	70) Are App. H daily start up inspections performed by operator and submitted with DRI?	
	(Yes)	(No)	(N/A)	71) Is crane operator qualified IAW EM 385-1-1, App. G, and is crane certification posted in cab?	
	(Yes)	(No)	(N/A)	72) Are workers protected from the crane swing radius and prevented from passing under the load?	
	(Yes)	(No)	(N/A)	73) Are rigging cables and slings in good repair free of kinks and cracks?	
	(Yes)	(No)	(N/A)	74) Is the crane level and on firm ground and outriggers in use with appropriate cribbing?	
	(Yes)	(No)	(N/A)	75) Is crane side loading prohibited?	
	(Yes)	(No)	(N/A)	76) Near electric power sources, are rules followed for clearance/isolation in operating zone?	
	(Yes)	(No)	(N/A)	77) Is crane equipped with anti two-block device if required?	
	(Yes)	(No)	(N/A)	78) Other? Extra Credit?	
CONFINED SPACES	(Yes)	(No)	(N/A)	79) Has entry plan been submitted and accepted?	
	(Yes)	(No)	(N/A)	80) Is atmosphere being monitored?	
Comments/Notes:	(Yes)	(No)	(N/A)	81) Is space being ventilated?	
	(Yes)	(No)	(N/A)	82) Are entrants, attendants and entry supervisor properly trained?	
	(Yes)	(No)	(N/A)	83) Is rescue/retrieval system in place?	
	(Yes)	(No)	(N/A)	84) Are daily entry permits posted at point of entry and signed by entry supervisor?	
	(Yes)	(No)	(N/A)	85) Is point of entry posted "**DANGER CONFINED SPACE**"?	
	(Yes)	(No)	(N/A)	86) Has blanking or locking out of systems taken place?	
	(Yes)	(No)	(N/A)	87) Other? Extra Credit?	
ROOFING	(Yes)	(No)	(N/A)	88) Are kettles at least 25 feet away from buildings?	
Comments/Notes:	(Yes)	(No)	(N/A)	89) Has an employee fall protection system been implemented and in proper use?	
	(Yes)	(No)	(N/A)	90) Are skylights and roof penetrations covered or barricaded appropriately?	
	(Yes)	(No)	(N/A)	91) Has the roof been evaluated for its ability to support the intended construction loads?	
	(Yes)	(No)	(N/A)	92) Has the roof been surveyed for deterioration?	
	(Yes)	(No)	(N/A)	93) Are two fire extinguishers at the kettle?	
	(Yes)	(No)	(N/A)	94) Fuel cylinder a minimum of 10' from open flame?	
	(Yes)	(No)	(N/A)	95) Other? Extra Credit?	
	(Yes)	(No)	(N/A)	96) Other? Extra Credit?	

CATEGORY:

EQUIPMENT

Comments/Notes:

(Yes)	(No)	(N/A)	97) Are forklift operators qualified through training at the site (certificate included in Safety Plan)?	
(Yes)	(No)	(N/A)	98) Does mobile equipment have rollover cages and backup alarms, with moving parts adequately guarded?	
(Yes)	(No)	(N/A)	99) Are equipment operations maintaining safe clearance from electrical power lines?	
(Yes)	(No)	(N/A)	100) Do modifications meet safety rating per manufacturer (i.e., lifting personnel with forklift)?	
(Yes)	(No)	(N/A)	101) Are safety lashings provided for high pressure hose connections, i.e., air compressors?	
(Yes)	(No)	(N/A)	102) Are workers clear of blind spots associated with mobile construction equipment?	
(Yes)	(No)	(N/A)	103) Do aerial lifts have basket/platform with guardrail?	
(Yes)	(No)	(N/A)	104) Are workers not extending over guardrail of aerial lifts?	
(Yes)	(No)	(N/A)	105) Are articulating boom platforms (JLG type) used with Full Body Harness attached to boom or basket?	
(Yes)	(No)	(N/A)	106) Other? Extra Credit?	
(Yes)	(No)	(N/A)	107) Other? Extra Credit?	

DEMOLITION

Comments/Notes:

(Yes)	(No)	(N/A)	108) Has demolition plan been submitted and accepted?	
(Yes)	(No)	(N/A)	109) If waste is being dropped > 6' is it in an enclosed chute and is area secured from traffic?	
(Yes)	(No)	(N/A)	113) For building demolition, has notification been made to State having jurisdiction?	
(Yes)	(No)	(N/A)	114) Are nails removed from scrap lumber/materials?	
(Yes)	(No)	(N/A)	115) Other? Extra Credit?	
(Yes)	(No)	(N/A)	116) Other? Extra Credit?	

PPE

Comments/Notes:

(Yes)	(No)	(N/A)	117) Workers wearing leather shoes (not tennis), long pants, sleeved shirts, and steel toes where required?	
(Yes)	(No)	(N/A)	118) Are hare hats being worn?	
(Yes)	(No)	(N/A)	119) Are safety glasses where appropriate?	
(Yes)	(No)	(N/A)	120) Hearing protection where appropriate? (if you need to yell to converse)	
(Yes)	(No)	(N/A)	121) Respirators where appropriate?	
(Yes)	(No)	(N/A)	122) Impalement protection provided where personnel could work above vertical impalement?	
(Yes)	(No)	(N/A)	123) Is lighting adequate?	
(Yes)	(No)	(N/A)	124) Other? Extra Credit?	

ABATEMENT

Comments/Notes:

(Yes)	(No)	(N/A)	125) Has abatement plan been submitted and accepted?	
(Yes)	(No)	(N/A)	126) Is independent air monitoring being performed as required inside and outside barriers?	
(Yes)	(No)	(N/A)	127) Is containment in place without integrity compromise?	
(Yes)	(No)	(N/A)	128) Are employees utilizing appropriate PPE?	
(Yes)	(No)	(N/A)	129) If negative air is used, are fans used continuously and monitored for pressure differential?	
(Yes)	(No)	(N/A)	130) Has baseline been performed and necessary final clearance readings taken?	
(Yes)	(No)	(N/A)	131) Are inspections by independent PQP performed prior to barrier removal?	
(Yes)	(No)	(N/A)	132) Is waste material properly containerized and stored?	
(Yes)	(No)	(N/A)	133) Are air monitoring results provided to ROICC?	
(Yes)	(No)	(N/A)	134) Are waste shipment records provided to ROICC?	
(Yes)	(No)	(N/A)	135) Other? Extra Credit?	

WATERFRONT ACTIVITIES

Comments/Notes:

(Yes)	(No)	(N/A)	136) Are employees wearing appropriate flotation devices (PFDs)?	
(Yes)	(No)	(N/A)	137) Is a rescue skiff available?	
(Yes)	(No)	(N/A)	138) Are emergency life rings available?	
(Yes)	(No)	(N/A)	139) If diving operations are taking place, has a dive plan been submitted and accepted?	
(Yes)	(No)	(N/A)	140) Does dive team consist of proper number and qualifications for employees?	
(Yes)	(No)	(N/A)	141) Other? Extra Credit?	

SCORING: **Total applicable for each category = X (where X includes responses for category of "Yes" and "No" but does not include N/A)**

Total with "Yes" responses for each category = Y

SCORE FOR EACH CATEGORY: **SCORE RATE EQUATION = Y / X**

1 PREPARATORY PHASE: _____
2 OFFICE TRAILER GENERAL: _____
3 FIRE PREVENTION: _____
4 SCAFFOLD SAFETY: _____
5 FALL PROTECTION: _____
6 LADDER SAFETY: _____
7 EXCAVATIONS: _____
8 ELECTRICAL: _____
9 CRANES: _____
10 CONFINED SPACES: _____
11 ROOFING: _____
12 EQUIPMENT: _____
13 DEMOLITION: _____
14 PPE: _____
15 ABATEMENT: _____
16 WATERFRONT ACTIVITIES: _____

OVERALL RATING = AVERAGE RATING FOR ALL CATEGORIES: _____

DZSP 21 PROCEDURE	NUMBER: FME-P-0004
	DATE: 11-08-2007
ANNEX 1501 – Facilities Management Engineering	
OFFICE OF PRIMARY RESPONSIBILITY: FME	REVISION: 1

1.0 SUBJECT: SCHEDULED UTILITY OUTAGE PROCEDURE

2.0 PURPOSE:

To establish standard procedures for processing Utility Outage Requests (UOR).

3.0 SCOPE:

This procedure applies to all DZSP 21 organizations, including applicable subcontractors and to all Navy-owned utilities on Guam.

4.0 DEFINITIONS:

AAFB	Andersen Air Force Base
ACO	Administrative Contracting Officer for the Navy
CNM	Commander Naval Forces Marianas
COR	Contracting Officer's Representative – the government liaison for the Annex Manager
FACENG	Facilities Engineering Department
G-Net	The on line document manager https://www.icemakr.com/G-Net/
GPA	Guam Power Authority
GWA	Guam Waterworks Authority
JON	MAXIMO Job Order Number
MAXIMO	Trade name for the Computer Maintenance Management System provided by the Navy and utilized by DZSP 21
NFM	Naval Facilities Engineering Command Marianas
PCC	Production Control Clerk
POC	Point of Contact
Procedure	A document providing procedural information and requirements for work performed in compliance with contractual requirements of a cross - functional nature that includes more than one Annex.
Requester	Contractor, DZSP 21 Annex, or other entity requesting a Utility Outage/Connection/Disconnection.

SSC	DZSP 21 Service Support Center
UT	Utilities Department; may refer to any or all of Annexes 1602 (electrical), 1605 (wastewater), 1606 (steam and demineralized water) or 1607 (water). 1600 refers to all four Annexes.
Utility Outage	Encompasses scheduled outage, connection, disconnection or service of water, sewer, electricity, steam, fire alarm or fire sprinkler system.

5.0 REFERENCE DOCUMENTS:

5.1 Base Operations Support Contract No. N62742-05-C-3501

5.2 FIN-P-0001 Payment Procedure for Credit Cards, Checks and Cash

6.0 RECORDS:

Record	Responsible Organization	Retention Period
Maximo Work Orders	Maximo Database	6 years & 3 mos after final payment
Project Files	Annex 1501	6 years & 3 mos after final payment
Project List	Annex 1501	Length of contract

7.0 PROCEDURE:

7.1 General:

7.1.1 DZSP 21 is responsible for processing and implementing all scheduled utility and facility outages on Naval Facilities Guam.

7.1.2 Utility Outage Requests (UORs) are generated by contractors hired by the Navy or AAFB. The contractors hired by DZSP 21, other utilities such as GWA, GPA, or by maintenance personnel within DZSP 21 and DZSP 21 subcontractors (including Annexes 1502 and 1600s) who require a utility outage in order to complete their work.

7.2 Requirements:

7.2.1 UOR Submission:

a. UORs are submitted to the SSC. UORs can be submitted by faxing the information to 339-5025, e-mail to DZSP21ssc@navfacmar.navy.mil or by hand delivery to the SSC located in Building 372.

b. UORs are submitted by completing SSC-F-006 R1, Utility Outage / Connection / Service Request (Appendix A).

c. UORs from external requesters shall follow the payment procedures as listed in FIN-P-0001, Payment Procedure for Credit Cards, Checks and Cash, and submit the appropriate forms with the UOR.

d. All submittals must include a site location map and a map showing clearly where the work will be done that requires the outage.

7.2.2 UOR Processing:

a. Upon receipt, the PCC responsible for coordinating UORs will:
   1. Add the UOR to the Tracking Log and assign it a UOR number.
   2. Forward the UOR to the annex manager for approval to process & obtain a project abbrev from Finance.
   3. Send the approval of the annex manager with a completed Request for Project Abbrev Form to Finance to obtain a project abbrev. Update Maximo with the project abbrev.
   4. Send out an e-mail Preliminary Notice of the outage to the DZSP 21 Utility Outage group with a cc: to the Building Manager(s) using the most recent Building Manager List provided by the Navy.
   5. If the outage has been requested by DZSP 21 and is for a fire alarm, fire sprinkler outage, or an existing JON under Annex 1502, e-mail the COR to obtain permission to complete the work. After completing the steps in paragraph d below.
   6. Create a JON for the UOR. The work subtype will be “UOR.” The naming convention for the job orders is as follows:
      i. For an electrical outage: DZSP21 – POWER – (Work Type POWER/Work Subtype - UOR)
      ii. For a steam outage: DZSP21 – STEAM – (Work Type – SDMN/Work Subtype - UOR)
      iii. For a water outage: DZSP 21 WATER – POTABLE WATER – (Work Type – WATER/Work Subtype - UOR)
      iv. For a wastewater outage: DZSP 21 WASTEWATER – WASTEWATER – (Work Type – WASTEWATER/Work Subtype - UOR)
      v. For a fire alarm or fire sprinkler outage or an existing JON under Annex 1502: DZSP 21 FACILITIES - FIRE ALARM/SPRINKLER – (Work Type – AAJO/Work Subtype - UOR)

7. If the requester asks for an estimate, provide the UOR to the Annex Manager of the Annex that will perform the outage to obtain an estimate for the work. The Annex Manager may designate a POC for the PCC to contact and work with for all UORs.
8. Provide a copy of the UOR to the Annex Manager or Annex POC for review.

b. In accordance with Annex 1501 requirements, the Government must be notified of the outage at least 5 business days before the outage takes place. Should the requester desire the outage within 5 business days or less, the PCC will inform the requester that the Navy requires at least 5 business days notice and that the PCC does not have the authority to schedule any outage in less than 5 business days.
    1. Should the requester insist on having the outage in less than 5 business days, the PCC will e-mail the Annex 1501 and/or ACO requesting permission to schedule the outage less than 5 working days of notification.
    2. If the COR and/ or ACO responds that the outage may be held on the scheduled date, the PCC will schedule the outage. IF THE ACO OR COR DOES NOT PROVIDE DIRECTION TO SCHEDULE THE OUTAGE IN LESS THAN 5 BUSINESS DAYS, THE OUTAGE MUST BE SCHEDULED FOR A LATER DATE. The requestor will be informed accordingly.

c. Outages that impact certain customers have special scheduling requirements. For an outage that impacts Housing customers, the Housing Office requests at least 14 days notice to ensure that all customers can be properly notified.
    1. The PCC will make every reasonable attempt to meet special scheduling requests, while keeping the requester informed.
    2. If Housing is impacted, the PCC will inform the requester of the special requirement for housing and schedule the outage accordingly.
    3. Should the customers and the requester not be able to agree on a date or if any other significant issues arise with the outage scheduling, the PCC will alert the FACENG Manager, who will resolve the issue with the NFM Operations and Acquisition Departments.
    4. When the issue has been resolved, the FACENG Manager will notify the PCC to continue scheduling the outage on the agreed upon date.

d. The respective Annex Manager who will perform the outage will assign the UOR to an engineer or estimator to review the requirements for completing the outage and provide an estimate if needed. The engineer/estimator (reviewer) will:
    1. Review the UOR and its attachments to determine if there is adequate information to perform the outage and, if needed, develop an estimate.
    2. Coordinate with the PCC to obtain the information from the requester, if additional information is needed or the reviewer has questions. If the questions are complicated or technical the engineer / estimator may coordinate directly with the POC listed on the UOR.
    3. Request from the POC (either directly or via SSC) that they provide drawings / sketches of the modifications to take place. After completion of the outage the reviewer will provide those drawings to the DZSP 21 FACENG Drafting Group to update the facility or utility drawings as appropriate.
    4. Verify the customers impacted by the outage. If the reviewer determines that additional or fewer customers than noted will be impacted, he / she will inform SSC. The PCC will then notify the additional customers and an e-mail Preliminary Notice to the DZSP 21 Utility Outage group.
    5. Take note of any additional requirements that are needed such as the addition of a backflow preventer for a water line.
    6. In the case where the “outage” is a temporary or permanent utility service connection, verify that the requestor has provided a NFM billing account number (obtained from the NFM Comptroller) for billing of the service to be utilized.
    7. In the case where the outage will result in a facility or utility being permanently taken out of service, the reviewer shall verify that all components such as poles and secondary lines are also removed, and / or that water lines will be properly capped and sewer lines appropriately plugged. He / she will verify that the removal of power / capping of water lines / plugging of sewer lines will be done at the appropriate place and all defunct lines / auxiliary systems will be removed.
    8. Take note any other discrepancies to code, Navy instruction, or other requirements. All discrepancies / problems will be reported to the POC. If the POC declines to address the problem, the issues will be reported to the COR of the relevant Annex.
    9. When all issues have been resolved (or elevated to the COR), sign off on the UOR and return it to SSC with the estimate if required.

7.2.3 Payment will be processed in accordance with FIN-P-0001, Payment

Procedure for Credit Cards, Checks and Cash.

7.2.4 Outage Scheduling:

a. The PCC will then schedule the outage. The PCC will:
   1. Call the Building Manager(s) (BM) of the affected building(s) to inform them of the requested outage date noted on the UOR.
   2. If the BM has concerns regarding the date, he / she will recommend an alternate date.
   3. If the requester is DZSP 21 and the date requires overtime, the PCC will obtain Annex Manager or COR authorization for the overtime as required.

b. For outage at AAFB, the contractor is responsible for notifying affected customers.
   1. At least five (5) business days before the outage, the contractor must provide written confirmation to the PCC that all affected customers have been notified.
   2. If the PCC does not receive such notice within five (5) business days, the PCC will notify the DZSP 21 Utility Outage group and AAFB personnel that the outage has been postponed.
   3. The outage will only be scheduled within five business days of such notice in accordance with paragraph 7.2.2.b above and with the concurrence of AAFB personnel.

c. Once the date for the outage has been confirmed, the PCC will:
   1. Send out a Scheduled Outage notification to the DZSP 21 Utility Outage group with a cc: to the Building Manager(s) and the requester.
   2. For Housing, the PCC will notify the Housing Representative and the Housing Representative shall notify all tenants regarding outage schedules. Housing Tenants shall contact Housing representative for concerns and or questions regarding outages.
   3. For a power, water, fire alarm or sprinkler system outage, notify the fire department.
   4. Notify the requester via telephone.
   5. For a power or steam outage, notify DZSP21 Power dispatch via telephone.
   6. For a water or sewer outage, notify the Annex 1607 Supervisor via telephone.
   7. For a water outage, notify the Annex 1800 Supervisor via telephone.

7.2.5 On the day of the outage:

a. The personnel conducting the outage will provide SSC with updates as to the status of the outage including when the outage begins and at major milestones (e.g. partial power restoration or outage is taking longer than expected). They will also inform SSC once the outage is complete.

b. The PCC will provide regular status updates to the DZSP 21 Utility Outage group with a cc: to the Building Manager(s) using the Notification Form in MS Excel.

c. The PCC will provide a final notification when the outage is complete.

7.2.6 Once the outage has been completed, the PCC will:

a. Cut and paste the Notification Form into the trade and SSC MAXIMO JONs.

b. For all outages except those completed by Annexes 1602 and 1606, change the MAXIMO status to complete.

c. Update the UOR log.

d. File all documents.

e. The MAXIMO JON will be closed out by:

1. For outages completed by Annexes 1602 and 1606, the Annex will close out the MAXIMO JON.
2. For all other outages, when the DZSP 21 utility or facility personnel turn in the completed chit SSC will close out the JON.

7.3 Roles and Responsibilities:

7.3.1 UOR Requestor(s) are responsible for ensuring that:

a. All required documentation is submitted to SSC within the required time frame as stated in this procedure.

b. Payments are disbursed on a timely manner.

7.3.2 Annex Managers are responsible for:

a. Ensuring that provisions of this procedure are communicated to and understood by their respective Annex.

b. Performing the outage on the scheduled date.

c. Keeping SSC updated on outage progress.

7.3.3 FACENG Manager is responsible for:

a. Overseeing the UOR program.

b. Forwarding UORs to the Government for approval, where outage is scheduled in less than 5 business days.

c. Resolving scheduling issues that could not be settled between SSC, customers or affected areas.

7.3.4 SCC is responsible for:

a. Receiving, reviewing, and processing UORs.

b. Creating and closing Maximo Work Orders.

c. Scheduling UORs.

d. Monitoring progress of the project.

e. Coordinating with Finance for payment processing.

7.3.5 Finance Department will follow guidelines of FIN-P-0001 when processing UOR payments.

8.0 EXHIBIT:

Appendix A: Utility Outage Request Form

SCHEDULED UTILITY OUTAGE PROCEDURE	PROCEDURE NO. FME-P-0004	REV. 1	DATE 11-08-07	PAGE 9	OF 11

9.0 APPROVALS:

ORIGINATED BY:

11/8/07

George K. Joseph — Date
Facilities Management Manager

CONCURRED BY:

11/8/07

Mark Lopez — Date
Public Works Director

CONCURRED BY:

11/8/07

George Harvey — Date
Quality Manager

CONCURRED BY:

8 Nov 07

Grady Lynn Holt — Date
Safety Manager

CONCURRED BY:

11/8/07

Mary Hogan — Date
Environmental Manager

APPROVED BY:

11/8/07

Douglas Markel — Date
Deputy Project Director

Appendix A
Utility Outage Request Form (page 1 of 2)

DZSP 21 **UTILITY OUTAGE/CONNECTION/SERVICE REQUEST NO**

☐ STEAM AND DEMINERALIZED WATER ☐ ELECTRICAL POWER ☐ POTABLE WATER ☐ WASTEWATER

☐OTHER (Describe) ☐ OUTAGE ☐ CONNECTION ☐ DISCONNECTION ☐ SERVICE

FROM (Name)	PHONE/FAX NO.	DATE
(Organization)	PHONE/FAX NO.	WR/CONTRACT OR PROJECT NO
Navy Contracting POC (If Contractor Originated)	PHONE/FAX NO.	PROJECT ABBREV.
LOCATION/AREA		ROM $

LENGTH AND DATE OF OUTAGE (MUST BE SUBMITTED TO DZSP21 14 DAYS BEFORE REQUESTED DATE)

FIRST CHOICE:	FROM DATE/TIME:		TO DATE/TIME:	
SECOND CHOICE:	FROM DATE/TIME:		TO DATE/TIME:	

JUSTIFICATION

OTHER/SPECIAL INSTRUCTIONS (SPECIFY)

AFFECTED LOCATIONS(S): HYDRANT NO., VALUE NO., STREET NAME, ETC.

ATTACHMENTS ☐ DRAWINGS ☐ PERMITS ☐ SCOPE OF WORK

AFFECTED FACILITIES

BLDG. NO.	BLDG. NAME	BLDG. NO.	BLDG. NAME
☐		☐	
☐		☐	
☐		☐	
☐		☐	

SIGNATURE DATE COPY TO

PWC COMPTROLLER

DATE RECEIVED	ELECTRICAL SERVICE $	CONNECTION JO# CONSUMPTION JO#
DATE RECEIVED	WATER SERVICE $	CONNECTION JO# CONSUMPTION JO#
DATE RECEIVED	OTHER SERVICE/SPECIFY $	CONNECTION JO# CONSUMPTION JO#
DATE RECEIVED		
	COMPTROLLER POC/SIGNATURE	

SCHEDULED UTILITY OUTAGE PROCEDURE	PROCEDURE NO. FME-P-0004	REV. 1	DATE 11-08-07	PAGE 11 OF 11

Appendix A
Utility Outage Request Form (page 2 of 2)

DZSP 21 **UTILITY OUTAGE/CONNECTION/SERVICE REQUEST NO _____**

OUTAGE COORDINATED BY DZSP 21			
ORG./DEPT	**NAME**	**DATE**	**NOTES**
☐ SERVICE SUPPORT			
☐ FME (STEAM/ ELEC/ WATER/ WW)			
☐ SET			
☐ HOUSING			
☐ FIRE DEPT.			
☐ AAFB			
☐ NFM PWO/APWO			
☐ MWR			
☐ SECURITY			
☐ BLDG MANAGER			
☐ ENVIRONMENTAL			
☐ SAFETY			
☐ PAO			
☐ HOUSING			
☐			
☐			
☐			

DZSP | 21

BOSC Utility Services

Requesting and Paying for Work Directly Through DZSP21

The procedure for contractors to schedule and pay for utility services from the Navy Base Operations Support Contractor is as follows:

- **Contractors submit work requests to Service Support Center (SSC).**
  - Contractors provide SSC with a completed Utility Service Request form, Customer Payment Information Sheet, and appropriate drawings/sketches.
  - Contractors are encouraged to submit work requests via e-mail and appropriate forms will be provided upon request.
  - Service Support Center (SSC) can be reached at (671) 333-2011 or in person in Building 372 between the hours of 0730 and 1630, or via e-mail at DZSPSSC.ctr@navfacmar.navy.mil.
    - Services including, but not limited to, water, sewer, electrical, steam or fire system outages, trailer hook-ups, and meter installations should be requested through SSC.
    - NOTE: DZSP21 requires a **minimum of 14 days** advance notice for utility outages. Before the 1st requested date. NOTE: Requested dates are subject to change due to extent of the outage requested.
- **Contractors must submit payment to DZSP21 before any work will be scheduled.**
  - DZSP21 accepts credit cards, cash, and company checks made payable to DZSP21 LLC.
  - SSC will contact Contractors with estimated cost of service once it is available.
  - Contractor must submit payment in the estimated amount:
    - Cash and checks will be deposited in full by DZSP21 upon receipt.
    - A hold will be placed on all credit cards for the estimated amount.
    - NOTE: All work is subject to a 10% administrative handling fee and GRT.
- **Upon receipt of payment in the estimated amount, SSC will schedule the request and coordinate with the necessary annexes/activities. The appropriate annex will execute the work.**
- **Once work is complete, DZSP21 Finance will gather actual total costs and charge the Contractor accordingly**
  - **Credit Cards:** DZSP21 will charge the credit card for the actual total costs plus fee and GRT, if less than or equal to the estimated amount
  - **Cash/Checks:** If actual total costs plus fee and GRT are less than the payment submitted, DZSP21 will refund the difference
  - If actual total costs plus fee and GRT exceed the estimated amount, SSC will contact Contractors to return to submit additional payment or authorize additional charges to the credit card.
- **DZSP21 will submit final invoices to all Contractors showing actual costs, once all charges have been reconciled.**

DZSP | 21

Customer Payment Information Sheet

Company or Command	**Date**
Point of Contact	**Telephone & Fax No.**
Address	**E-mail Address**

Brief Description of Work:

Payment Information Please indicate your method of payment:

Credit Card	**Cash**	**Pre-paid/Purchase Order**

If submitting payment via credit card, please fill in the following information:

Name on the Credit Card:	
Credit Card No.	**Expiration Date**:
Type of Credit Card: (DZSP does NOT accept AMERICAN EXPRESS) VISA or MASTERCARD	
Printed Name:	
Signature:	

(NOTE: Failure to provide this information will cause delay in processing payment).

COMPLETED BY DZSP 21

MAXIMO Work Order No.:

Project Abbreviation:

TRANSFER AND ACCEPTANCE OF MILITARY REAL PROPERTY

Form Approved
OMB No. 0704-0188

PAGE OF PAGES

The public reporting burden for this collection of information is estimated to average 30 minutes per response, including the time for reviewing instructions, searching existing data sources, gathering and maintaining the data needed, and completing and reviewing the collection of information. Send comments regarding this burden estimate or any other aspect of this collection of information, including suggestions for reducing the burden, to the Department of Defense, Executive Services Directorate (0704-0188). Respondents should be aware that notwithstanding any other provision of law, no person shall be subject to any penalty for failing to comply with a collection of information if it does not display a currently valid OMB control number.

PLEASE DO NOT RETURN YOUR COMPLETED FORM TO THE ABOVE ORGANIZATION.

1. FROM *(Installation/Activity/District and ZIP Code)*	2. DATE PREPARED *(YYYYMMDD)*	3. PROJECT/JOB NUMBER	4. SERIAL NUMBER
5. TO *(Installation/Activity/Service, ZIP Code & INSNO)*	6. SITE/INSNO/ NAME	7. CONTRACT NUMBER(S)	8. DRAWING NUMBER(S)

9. TRANSACTION DETAILS

a. ☐ NEW CONST. ☐ EXISTING FAC. ☐ CAPITAL IMP. ☐ OTHER *(Specify)*

b. ☐ PHYS. COM. AVAIL. ☐ BENF/O ☐ PARTIAL BOD ☐ FINANCIAL COM. ☐ OTHER *(Specify)*

c. ☐ DRAFT ☐ FINAL ☐ INTERIM

d. EFFECTIVE DATE *(YYYYMMDD)*

10. ITEM NO.	11. FACILITY NO.	12. CATEGORY CODE	13. CATCODE DESCRIPTION	14. TYPE	AREA 15. UNIT OF MEAS 1	AREA 16. TOTAL QUANTITY UM 1	OTHER 17. UNIT OF MEAS 2	OTHER 18. TOTAL QUANTITY UM 2	19. COST	20. FUND SOURCE	21. FUND ORG	22. INTER-EST CODE	23. ITEM REMARKS

24. STATEMENT OF COMPLETION. The facilities listed hereon are in accordance with maps, drawings, and specifications and change orders approved by the authorized representative of the using agency except for the deficiencies listed on the reverse side.

a. TRANSFERRED BY *(Typed Name and Signature)*

b. DATE SIGNED *(YYYYMMDD)*

c. TITLE *(Area Engr./Base Engr./DPW)*

25.a. ACCEPTED BY *(Typed Name and Signature)*

b. DATE SIGNED *(YYYYMMDD)*

c. TITLE *(DPW/RPAO)*

26. PROPERTY VOUCHER NUMBER

DD FORM 1354, MAR 2004 PREVIOUS EDITION IS OBSOLETE. Adobe Professional 7.0

27. CONSTRUCTION DEFICIENCIES *(attach blank sheet for continuations)*	28. PROJECT REMARKS *(attach blank sheet for continuations)*

INSTRUCTIONS

GENERAL. This form has been designed and issued for use in connection with the transfer of military real property between the military departments and to or from other government agencies. It supersedes ENG Forms 290 and 290B (formerly used by the Army and Air Force) and NAVDOCKS Form 2317 (formerly used by the Navy).

Existing instructions issued by the military departments relative to the preparation of DD Form 1354 are applicable to this revised form to the extent that the various items and columns on the superseded forms have been retained. The military departments may promulgate additional instructions, as appropriate.

For detailed instructions on how to fill out this form, please refer to Unified Facilities Criteria (UFC) 1-300-08, dated 17 December 2003.

SPECIFIC DATA ITEMS.

1. **From.** Name and address of the transferring agency.

2. **Date Prepared.** Date of actual preparation. Enter all dates in YYYYMMDD format (Example: March 31, 2004 = 20040331).

3. **Project/Job Number.** Project number on a DD Form 1391 or Individual Job Order Number.

4. **Serial Number.** Sequential serial number assigned by the preparing organization (e.g., 2004-0001).

5. **To.** Name and address of the receiving installation, activity, and service of the Real Property Accountable Officer (RPAO).

6. **Site/INSNO and Name.** Site or installation number and site name where the constructed facility is located.

7. **Contract Number(s).** Contract number(s) for this project.

8. **Drawing Number(s).** Drawing number(s) or CAD identifier(s) for project components.

9. **Transaction Details.**
   a. Type of Transaction. Mark (X) only one box.
   b. When/Event. When or event causing preparation of DD Form 1354. X only one box.
   c. Version. Draft, interim, or final DD Form 1354. X only one box.
   d. Effective Date. Effective date for transaction; start date for depreciation.

10. **Item Number.** Use a separate item number for each facility, no item number for additional usages.

11. **Facility Number.** Unique facility number identified in Real Property Inventory.

12. **Category Code.** The category code describes the facility usage.

13. **Catcode Description.** The category code name which describes the facility usage.

14. **Type.** Type of construction: P for Permanent; S for Semipermanent; T for Temporary.

15. **Area: Unit of Meas 1.** Area unit of measure; use SF, SY, AC only.

16. **Total Quantity UM 1.** The total area for the measure identified in Item 15. Use negative numbers for demolition.

17. **Other: Unit of Meas 2.** Unit of Measure 2 is the capacity or other measurement unit (e.g., LF, MB, EA, etc.).

18. **Total Quantity UM 2.** The total capacity/other for the measure identified in Item 17.

19. **Cost.** Cost for each facility; for capital improvements to existing facilities, show amount of increase only.

20. **Fund Source.** Enter the Fund Source Code for this item, i.e., 01-MILCON, 02-BRAC, 03-O&M, etc.

21. **Funding Organization.** Enter the code for the organization responsible for replacing this facility at the end of its useful life, i.e., 00-Army Active, 01-Army Reserve, 02-Army National Guard, etc.

22. **Interest Code.** Enter the code that reflects government interest or ownership in the facility, i.e., 01-Owned by DoD, 02-Owned by Federal Government (non-DoD), etc.

23. **Item Remarks.** Remarks pertaining only to the item number identified in Item 10; show cost sharing.

24. **Statement of Completion.** Typed name, signature, title, and date of signature by the responsible transferring individual or agent.

25. **Accepted By.** Typed name, signature, title, and date of signature by the RPAO or accepting official.

26. **Property Voucher Number.** Next sequential number assigned by the RPAO in voucher register.

27. **Construction Deficiencies.** List construction deficiencies in project during contractor turnover inspection.

28. **Project Remarks.** Project level remarks, continuation of blocks, and used to explain "other" entries in Item 9.

DD FORM 1354 (BACK), MAR 2004

Annex 1501 Appendix 1. Payment Responsibility Form

(Determines what customer's ACRN will pay for the utilities excavation permit request)

UTILITIES EXCAVATION PERMIT REQUEST

PAYMENT RESPONSIBILITY FORM

Contractor Name:	
Address:	
Phone Number:	
E-Mail Address:	

Request DZSP 21 LLC to perform construction clearance for Contract No. _____, Project No. _____ at _____ (specific location).

Government Representative assigned to the contract will print and sign form. For Navy projects, the Annex 1501 COR or PAR must approve. For Housing projects, the appointed Ordering Officer must approve. Government Rep will ensure that funds are available under the appropriate Annex 1501 ACRN prior to work being started.

Please indicate what ACRN will be used to charge the work:

- NAVFACMAR Utilities ACRN _____
- NAVFACMAR MILCON ACRN _____
- CJRM ST "Project" ACRN _____
- Family Housing ACRN _____
- Other ACRN _____ or Credit Card _____

  Requests for non-Navy projects must have an established ACRN or pay by credit card

Print Name, Government Rep assigned to contract (COR, PAR, or Ordering Officer)

Signature (COR, PAR or Ordering Officer)

Submit by Email Print Form

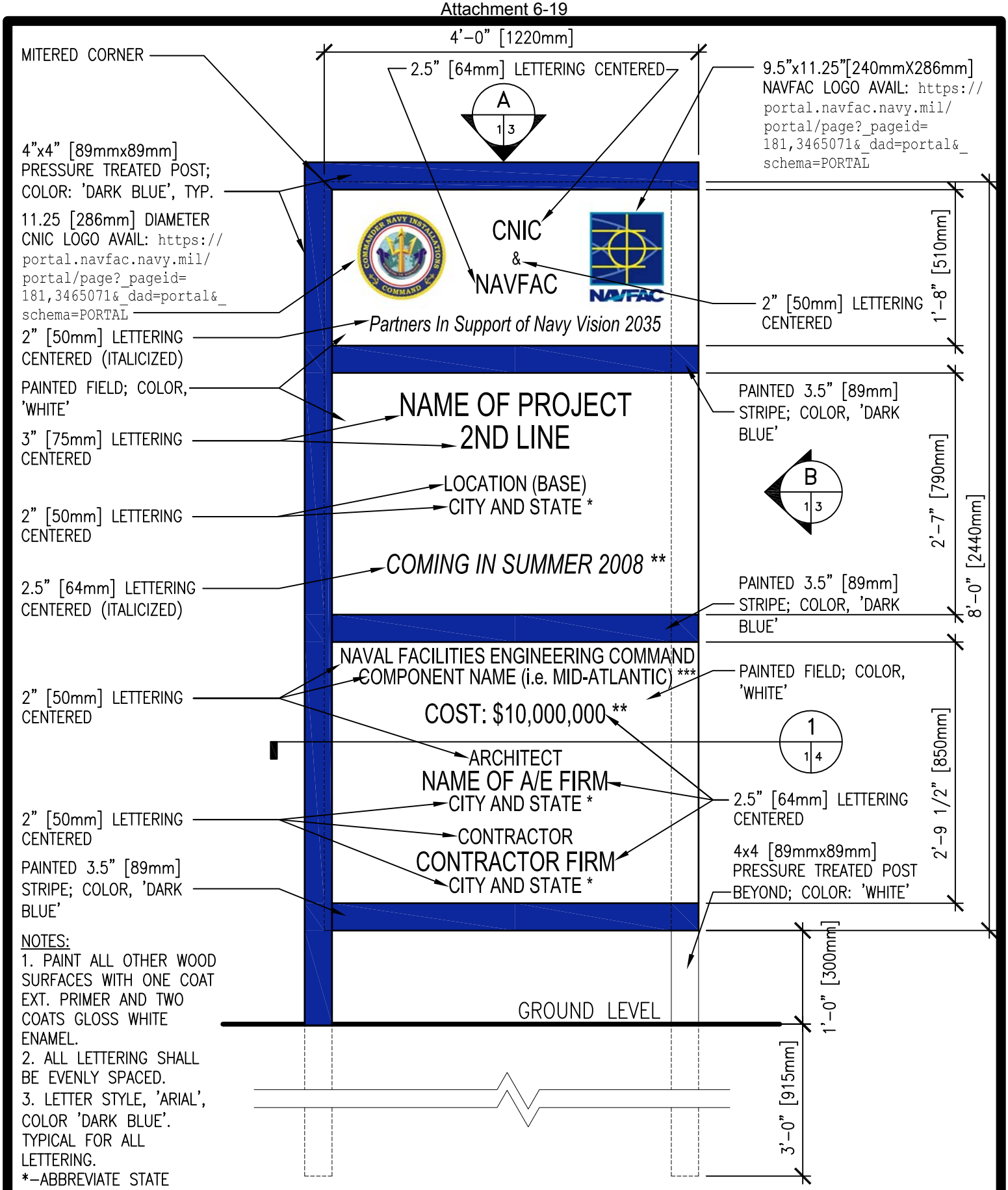

NOTES:
1. PAINT ALL OTHER WOOD SURFACES WITH ONE COAT EXT. PRIMER AND TWO COATS GLOSS WHITE ENAMEL.
2. ALL LETTERING SHALL BE EVENLY SPACED.
3. LETTER STYLE, 'ARIAL', COLOR 'DARK BLUE'. TYPICAL FOR ALL LETTERING.
*–ABBREVIATE STATE
**–CONFIRM USE WITH CONTRACTING OFFICER
***–VERIFY NAME WITH CONTRACTING OFFICER.

PROJECT IDENTIFICATION SIGNBOARD

SCALE: 3/4" = 1'-0"

PLATE 1

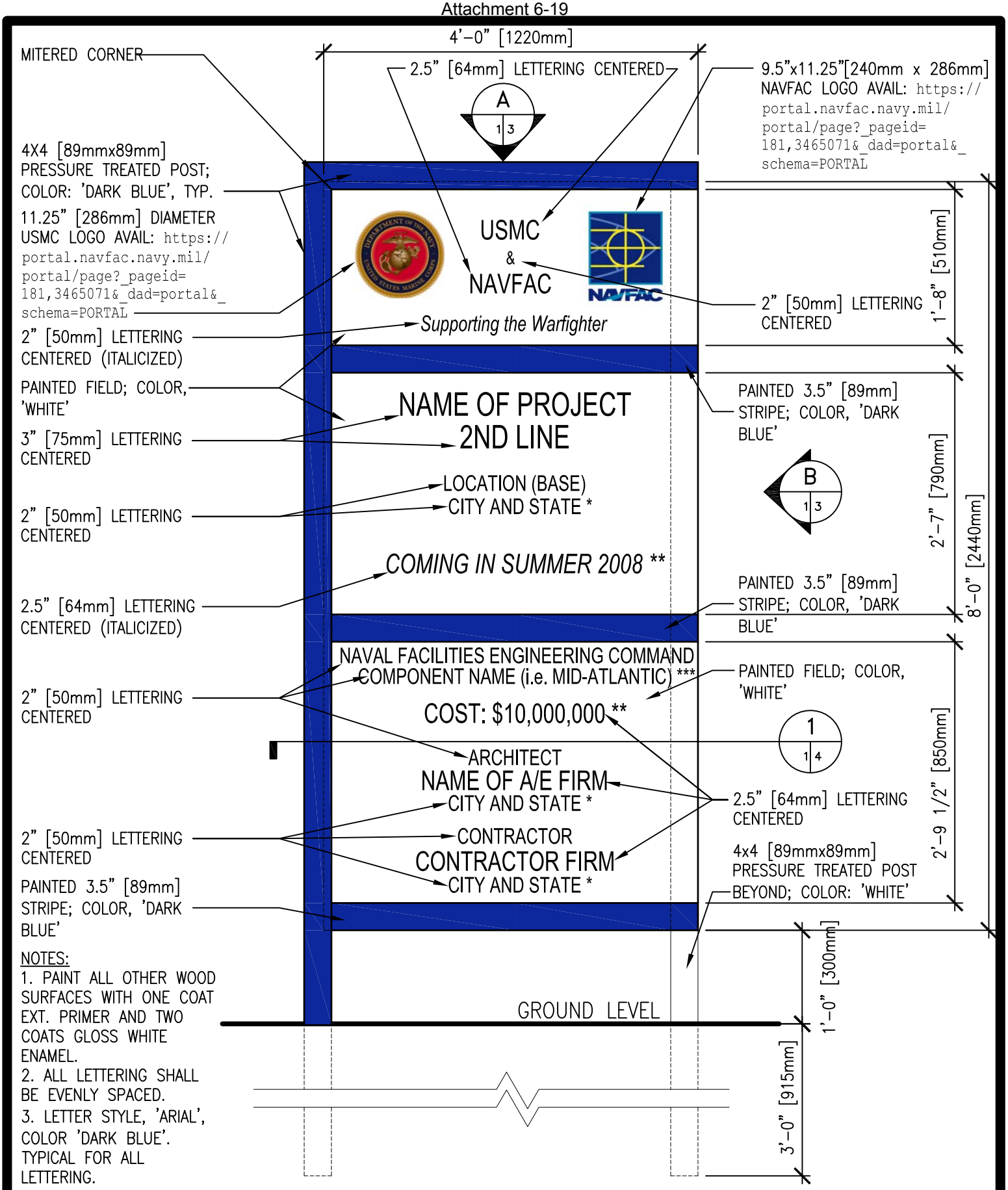

NOTES:

1. PAINT ALL OTHER WOOD SURFACES WITH ONE COAT EXT. PRIMER AND TWO COATS GLOSS WHITE ENAMEL.
2. ALL LETTERING SHALL BE EVENLY SPACED.
3. LETTER STYLE, 'ARIAL', COLOR 'DARK BLUE'. TYPICAL FOR ALL LETTERING.

*–ABBREVIATE STATE
**–CONFIRM USE WITH CONTRACTING OFFICER
***–VERIFY NAME WITH CONTRACTING OFFICER.

PROJECT IDENTIFICATION SIGNBOARD FOR MARINE CORPS PROJECTS

SCALE: 3/4" = 1'-0"

PLATE 1MC

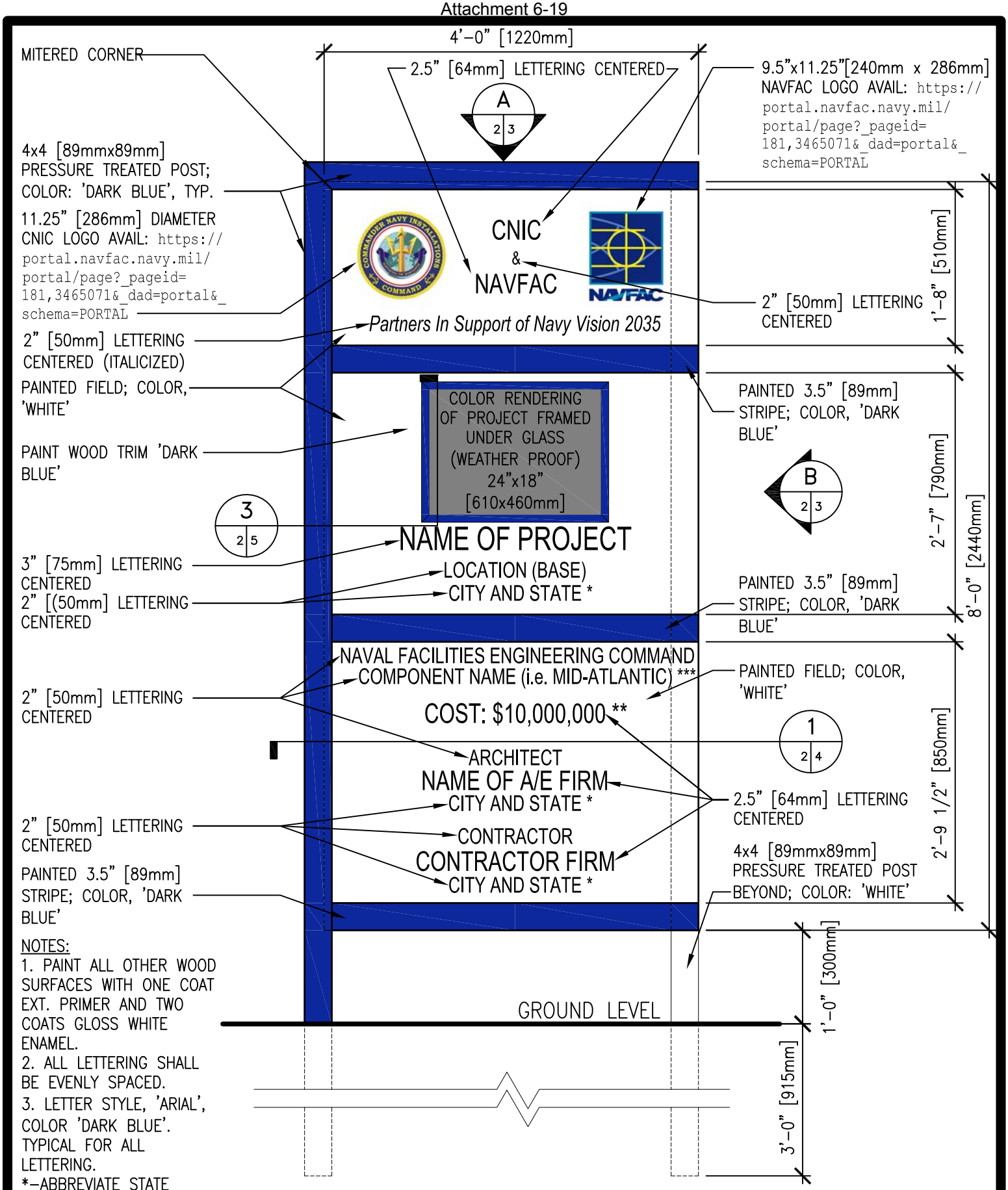

NOTES:
1. PAINT ALL OTHER WOOD SURFACES WITH ONE COAT EXT. PRIMER AND TWO COATS GLOSS WHITE ENAMEL.
2. ALL LETTERING SHALL BE EVENLY SPACED.
3. LETTER STYLE, 'ARIAL', COLOR 'DARK BLUE'. TYPICAL FOR ALL LETTERING.
*–ABBREVIATE STATE
**–CONFIRM USE WITH CONTRACTING OFFICER
***–VERIFY NAME WITH CONTRACTING OFFICER.

PROJECT IDENTIFICATION SIGNBOARD

SCALE: 3/4" = 1'-0"

PLATE 2

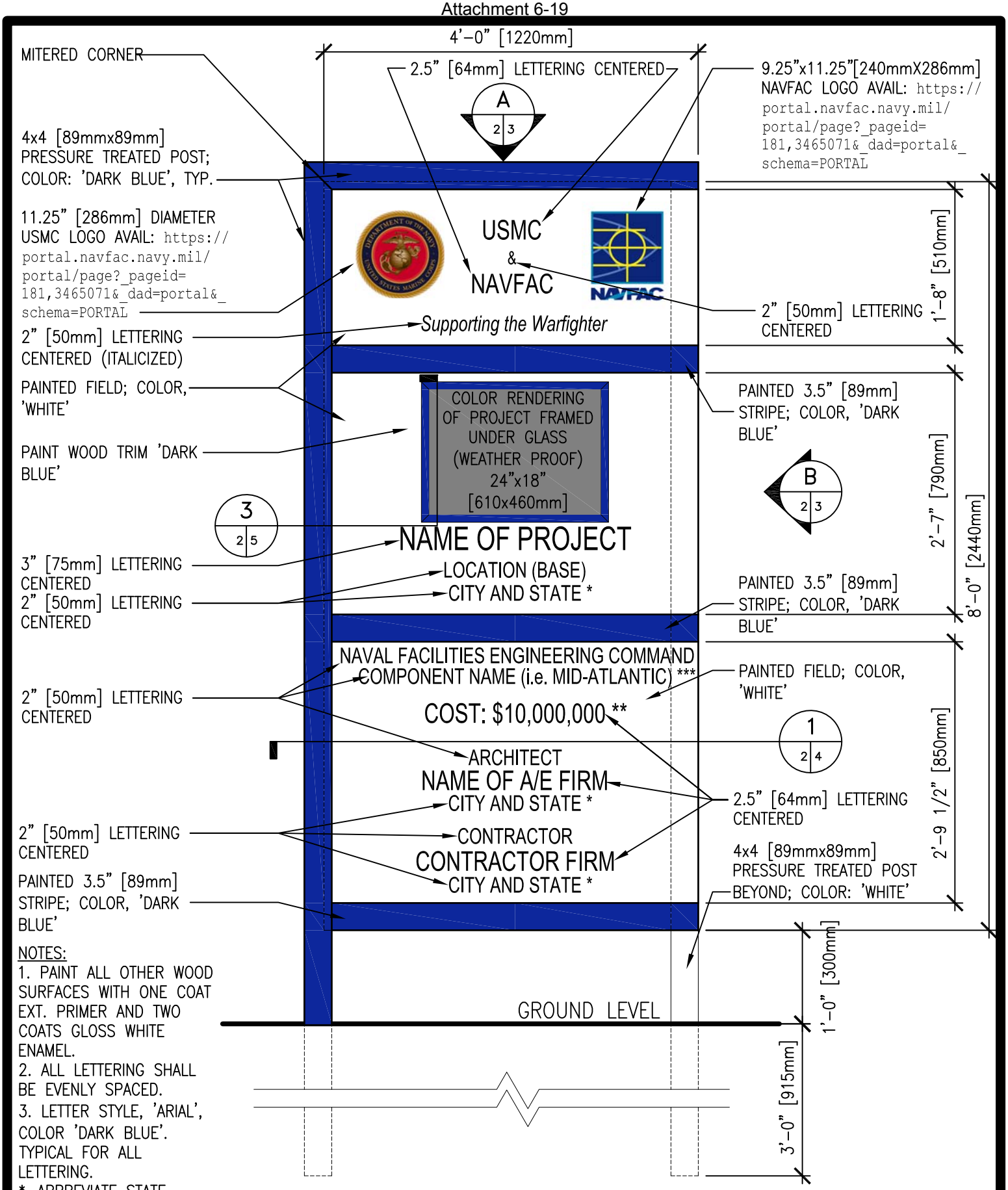

PROJECT IDENTIFICATION SIGNBOARD FOR MARINE CORPS PROJECTS

SCALE: 3/4" = 1'-0"

PLATE 2MC

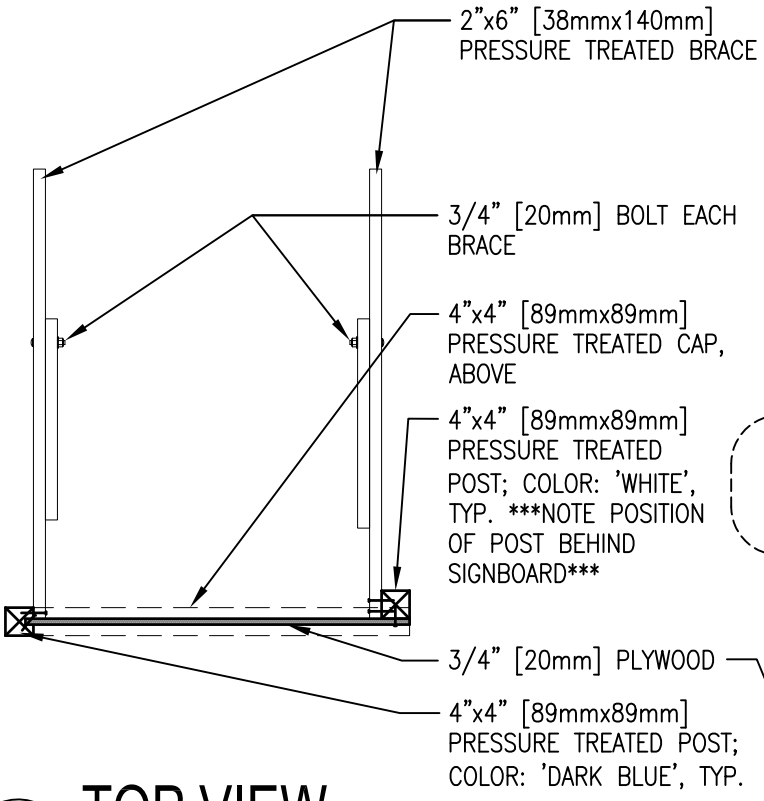

A
1,2 | 3

TOP VIEW

SCALE: 1/2" = 1'-0"

NOTES:
1. POSTS AND BRACES SHALL BE PRESSURE TREATED.
2. ALL FASTENERS SHALL BE ZINC COATED.
3. INCLUDE OPTIONAL BRACING IN UNSTABLE SOIL OR HIGH WIND ENVIRONMENTS.

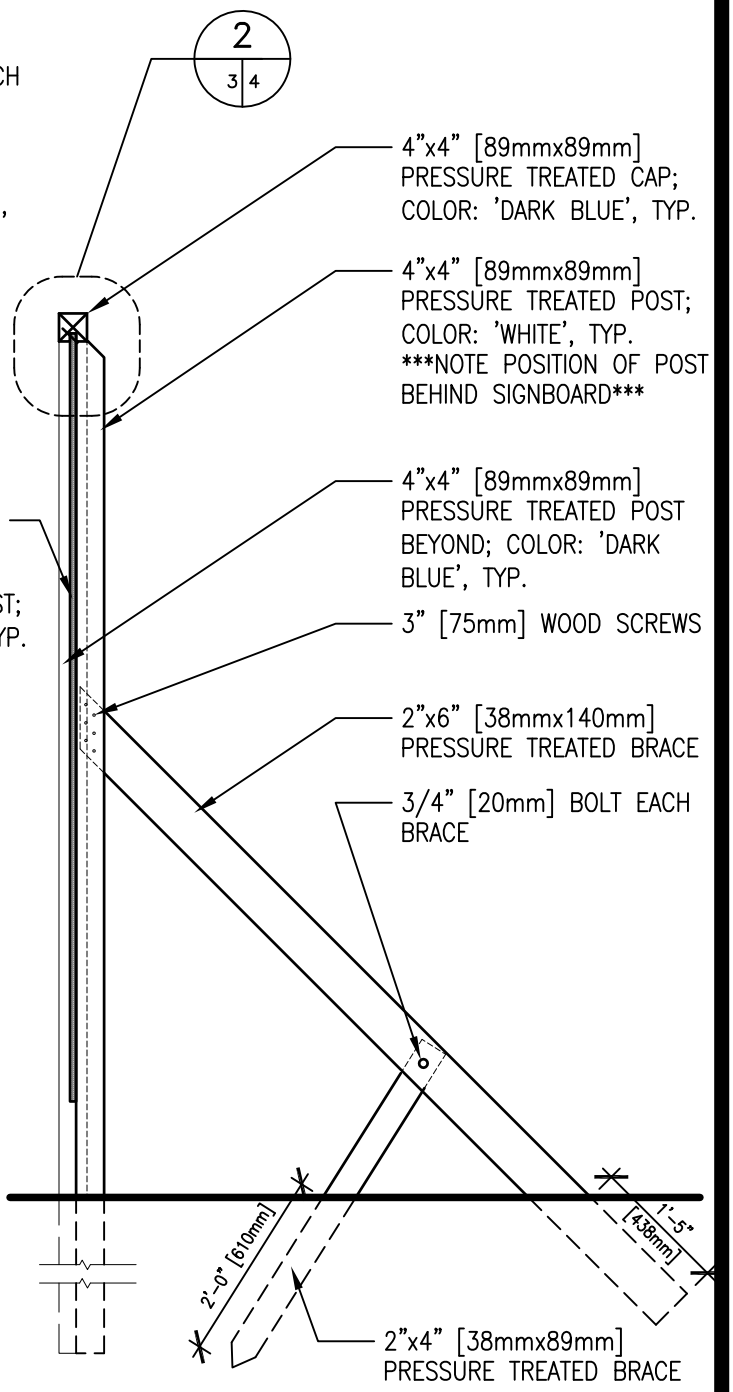

B
1,2 | 3

SIDE VIEW

SCALE: 1/2" = 1'-0"

PROJECT IDENTIFICATION SIGNBOARD SUPPORT DETAILS

PLATE 3

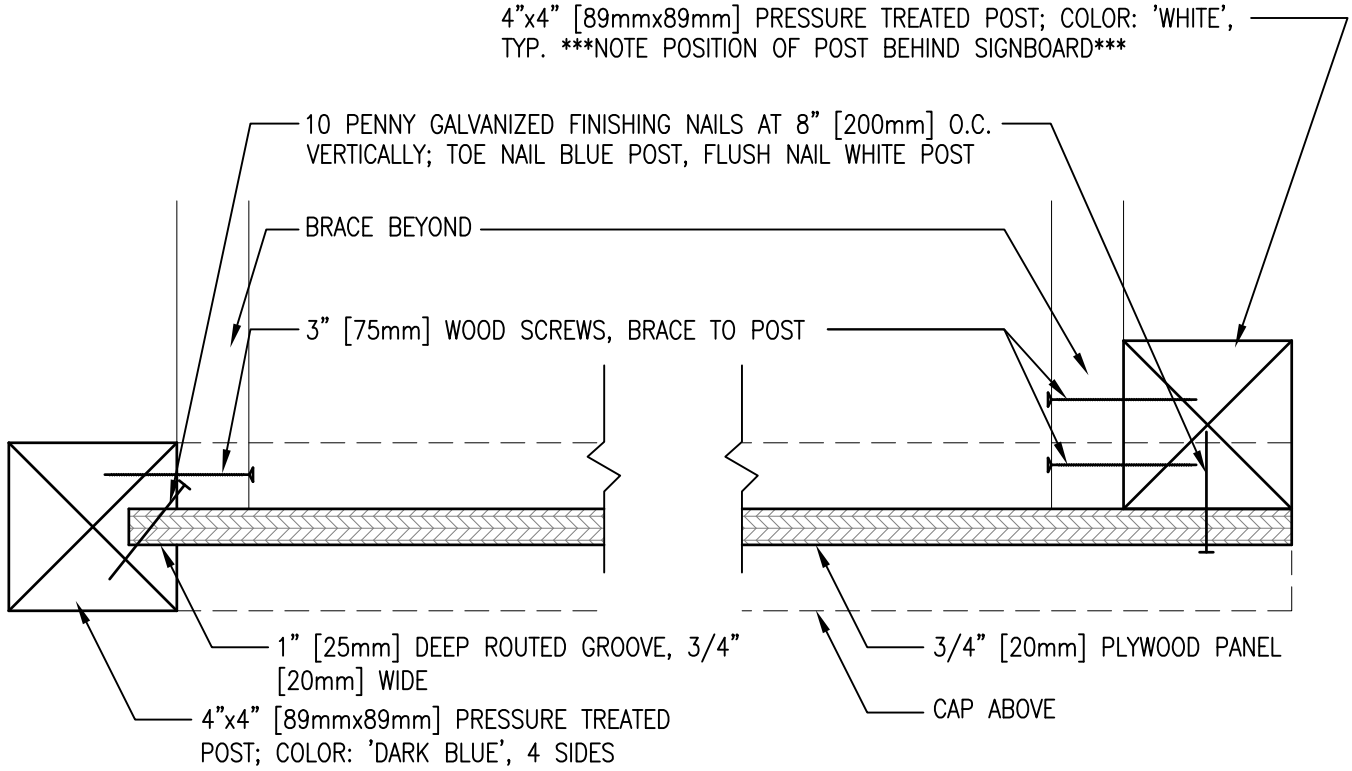

1 PLAN SECTION

1,2 | 4

SCALE: 3" = 1'-0"

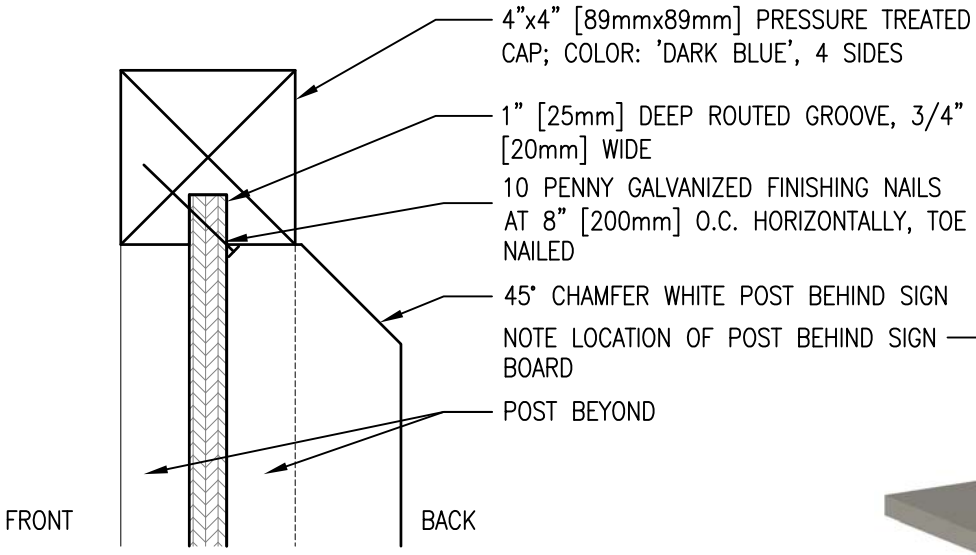

2 SECTION AT TOP

1,2 | 4

SCALE: 3" = 1'-0"

3 ISO VIEW

2 | 4

SCALE: NONE

PROJECT IDENTIFICATION SIGNBOARD SECTIONS

PLATE 4

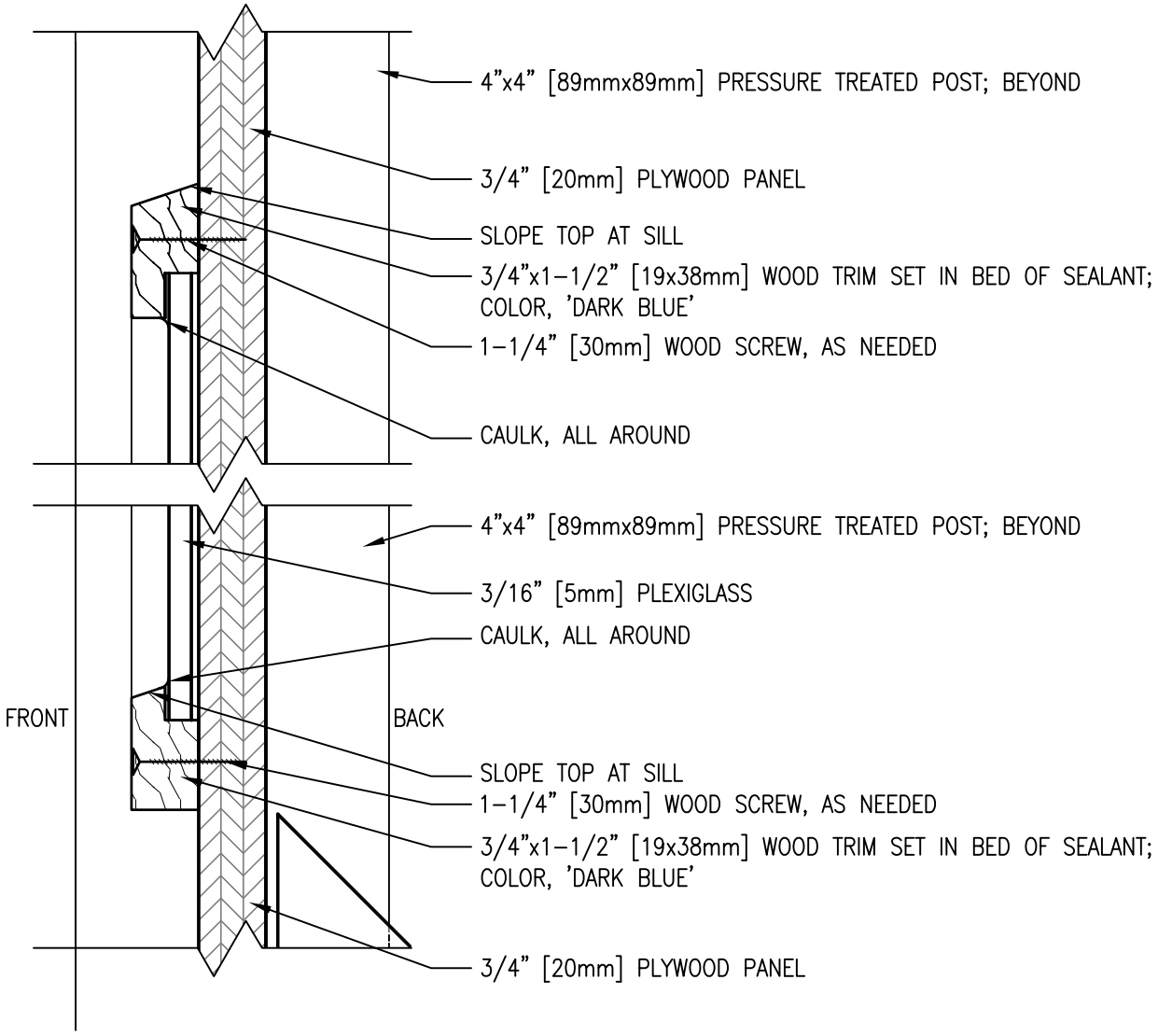

3
2 5

SECTION AT RENDERING FRAME

SCALE: 6" = 1'-0"

PROJECT IDENTIFICATION SIGNBOARD SECTION

PLATE 5

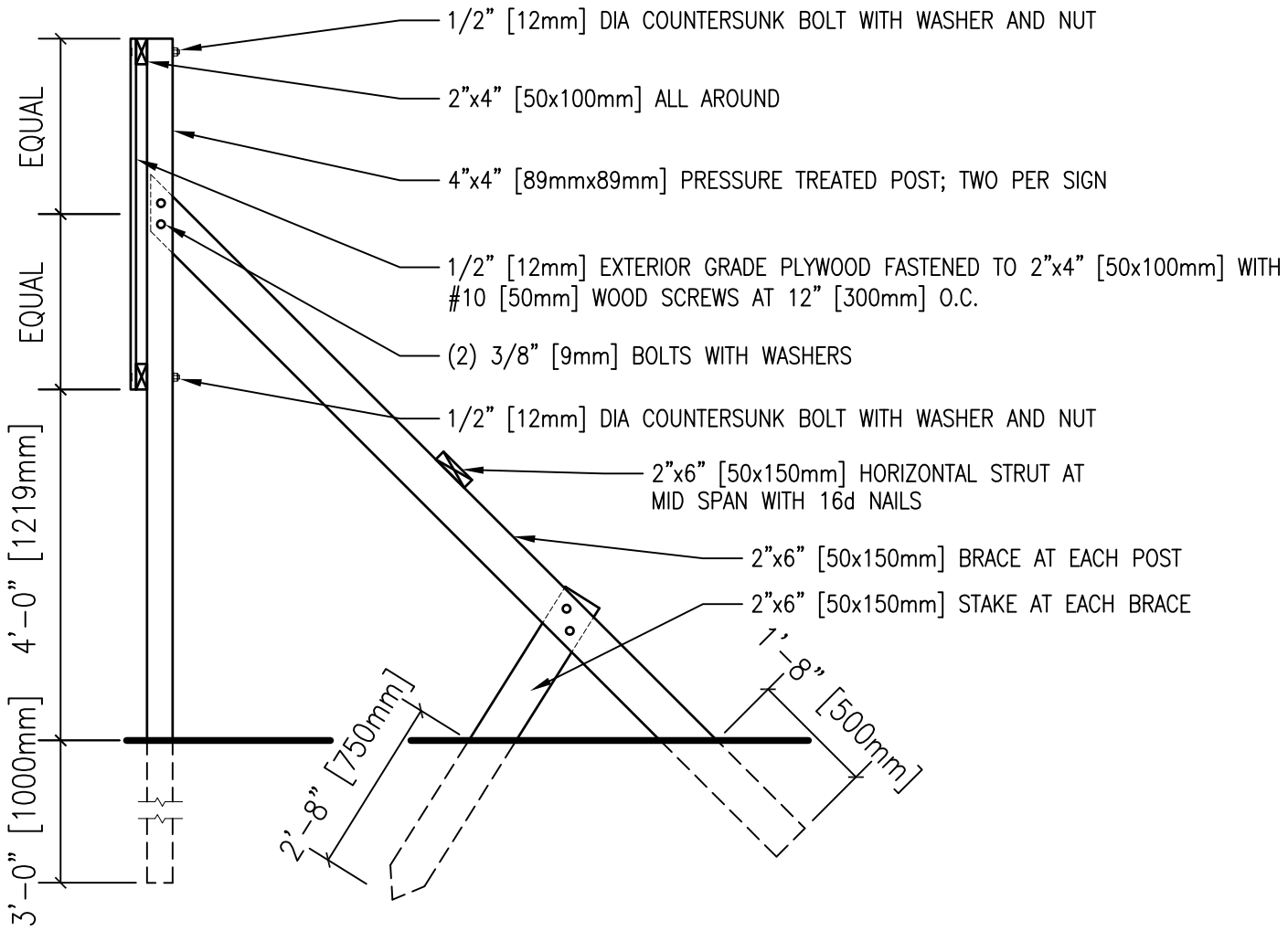

A
6 6

SECTION

SCALE: 1/2" = 1'-0"

NOTES:

1. THE SIGN MUST BE CONSTRUCTED OF 4'x8' [1200mmx2400mm] 1/2" [12mm] GRADE A-C, EXTERIOR TYPE PLYWOOD MOUNTED ON A FRAME OF TREATED LUMBER.
2. THE HOST MAJCOM WILL PROVIDE SIGN COLORS AND DETAILS TO THE DESIGN MANAGER IN THE REQUIREMENTS AND MANAGEMENT PLAN (RAMP).
3. ALL LETTERING SHALL BE UPPERCASE HELVETICA MEDIUM.
4. PRESERVATIVE TREAT ALL WOOD SURFACES BURIED OR IN CONTACT WITH THE EARTH.
5. ALL FASTENERS SHALL BE GALVANIZED COATED.
6. LUMBER SHALL BE NON STRESS GRADE: $F_t = 8.5^5$ KGS/M^2 (1200PSI)6
   $F_t = 10.5^5$ KGS/M^2 (1500PSI)
7. THE ENTIRE SIGNBOARD AND SUPPORTS SHALL BE GIVEN ONE COAT OF EXTERIOR ALKYD PRIMER AND TWO COATS OF EXTERIOR ALKYD ENAMEL PAINT. THE LETTERING AND SIGN WORK SHALL BE PERFORMED BY A SKILLED SIGN PAINTER USING PAINT KNOWN IN THE TRADE AS BULLETIN COLORS. WHERE PRESERVATIVE-TREATED LUMBER IS REQUIRED, UTILIZE ONLY CURED PRESSURE-TREATED WOOD WHICH HAS HAD THE CHEMICALS LEACHED FROM THE SURFACE OF THE WOOD PRIOR TO PAINTING.

PROJECT IDENTIFICATION - U.S. AIR FORCE PROJECTS

PLATE 6

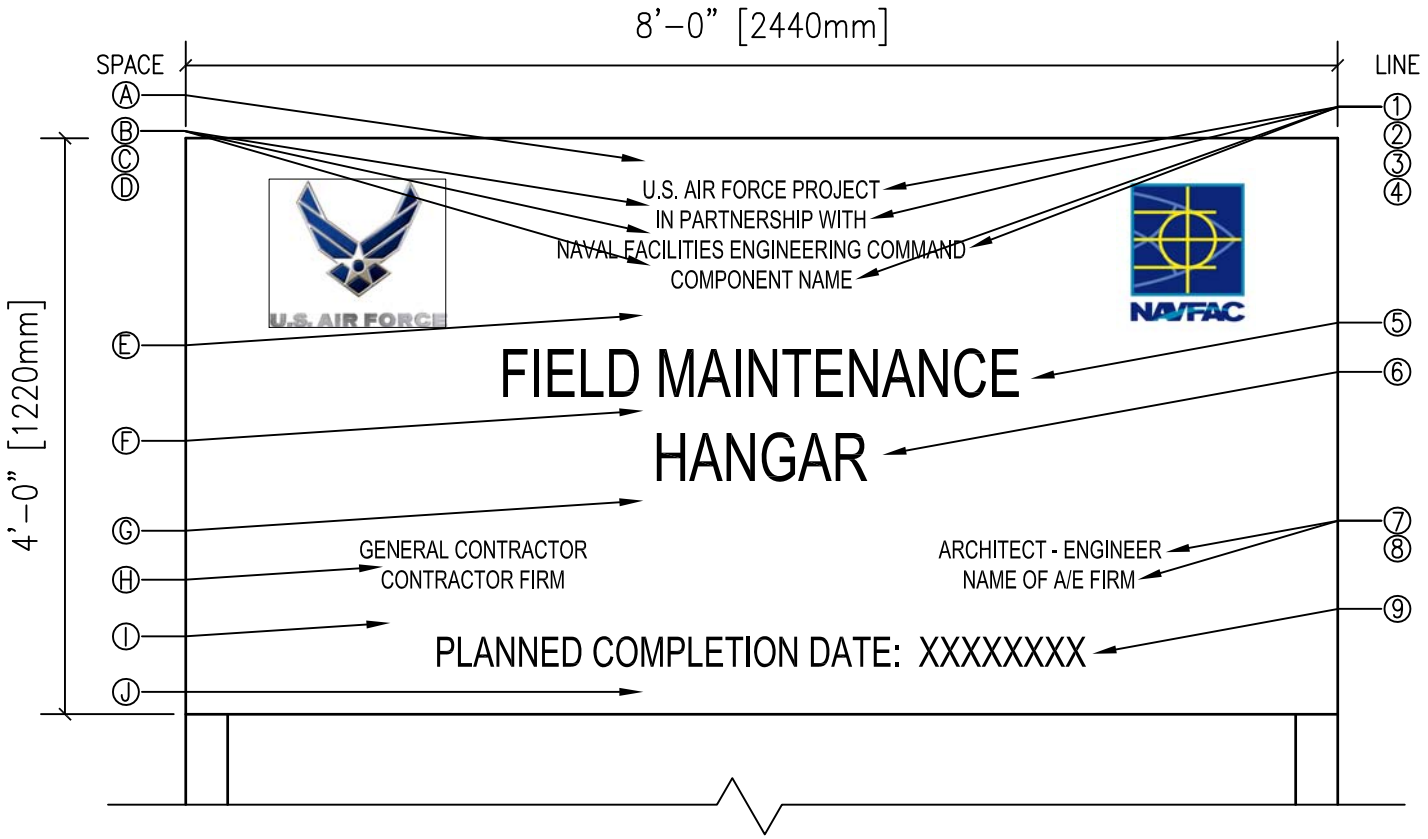

A
7 7

SIGNBOARD

SCALE: 3/4" = 1'-0"

SPACE	HEIGHT	LINE	DESCRIPTION	LETTER HEIGHT	STROKE
Ⓐ	3.5"	①	U.S. AIR FORCE PROJECT	1.5"	3/16"
Ⓑ	1"	②	IN PARTNERSHIP WITH	1.5"	3/16"
Ⓒ	1"	③	NAVAL FACILITIES ENGINEERING COMMAND	1.5"	3/16"
Ⓓ	1"	④	COMPONENT NAME	1.5"	3/16"
Ⓔ	5"	⑤	PROJECT NAME	4"	1/2"
Ⓕ	3"	⑥	PROJECT NAME CONT'D (IF REQUIRED)	4"	1/2"
Ⓖ	5"	⑦	GENERAL CONTRACTOR/ A-E	1.5"	3/16"
Ⓗ	1"	⑧	GENERAL CONTRACTOR/ A-E	1.5"	3/16"
Ⓘ	4"	⑨	PLANNED COMPLETION DATE:	2.5"	1/4"
Ⓙ	4"				

NOTES:
1. ALL LETTERING SHALL BE UPPERCASE HELVETICA MEDIUM.

2. NAVFAC LOGO AVAILABLE AT:
https://portal.navfac.navy.mil/portal/page?_pageid=181,3465071&_dad=portal&_schema=PORTAL

3. AIR FORCE LOGO AVAILABLE AT:
http://www.af.mil/library/symbol/graphics/D-02/afg_021216_017.jpg

PROJECT IDENTIFICATION - U.S. AIR FORCE PROJECTS

PLATE 7