OHM Remediation Services Corp.
A Subsidiary of OHM Corporation

WORK PLAN
SITE CLEANUP ACTION
FORMER NAVAL TRAINING CENTER BAINBRIDGE
PORT DEPOSIT, MARYLAND

Prepared for:

DEPARTMENT OF THE NAVY
Atlantic Division
Contract No. N62470-93-D-3032/137
EFA Chesapeake - NAVFACENGCOM
901 M Street, S.E., Building 212
Washington, DC 20374-5018

Prepared by:

OHM Remediation Services Corp.
200 Horizon Center Boulevard
Trenton, New Jersey 08691-1904

Reviewed by:

Lawrence J. Stearns, P.E.
Project Manager

John P. Franz, P.E.
Program Manager

April 18, 1997
Delivery Order #137
OHM Project 19568

TABLE OF CONTENTS

LIST OF TABLES iv

1.0 INTRODUCTION 1-1

2.0 SITE SETUP 2-1

3.0 LOCATION SEARCHES 3-1

3.1 STEP #1: STRUCTURAL HAZARD IDENTIFICATION 3-1
3.2 STEP #2: ELECTRICAL HAZARD IDENTIFICATION 3-2
3.3 STEP #3: DESIGNATION AND ORIENTATION OF SEARCH PERSONNEL 3-2
3.4 STEP #4: GRID CELLS AND SEARCH AREAS 3-2
3.5 STEP #5: IDENTIFICATION OF POTENTIAL HAZARDS BY SEARCH PERSONNEL 3-3
3.6 STEP #6: MARKING/FLAGGING SCHEME 3-3
3.7 STEP #7: POST-REMOVAL AND POST-CLEANUP INSPECTIONS 3-3
3.8 STEP #8: PRE- AND POST-CLEANUP PHOTOGRAPHY 3-4
3.9 STEP #9: ONGOING AND FINAL DOCUMENTATION 3-4

4.0 WASTE AND DEBRIS REMOVAL 4-1

4.1 BUILDING NO. 6 --SODIUM HYPOCHLORITE DRUMS 4-1
4.2 BUILDING 760 --AUTO HOBBY SHOP 4-1
4.3 BUILDING 526 4-2
4.4 OTHER LOCATIONS -- VARIOUS MATERIALS/CONTAINERS 4-2

5.0 TRANSFORMER REMOVALS 5-1

6.0 WELL ABANDONMENT 6-1

7.0 WASTE HANDLING PLAN 7-1

7.1 DESCRIPTION OF WASTES 7-1
7.2 WASTE CHARACTERIZATION 7-1
7.2.1 Transformer and Capacitor Characterization 7-1
7.2.2 Compressed Gas Cylinder Characterization 7-2
7.2.3 Labeled and Unlabeled Container Characterization 7-2
7.2.4 Miscellaneous Debris Characterization 7-2
7.2.5 Stained Soil and Floor Characterization 7-3
7.3 WASTE DISPOSAL 7-3
7.3.1 Determination of Required Treatment Technology 7-3
7.3.2 Disposal Facility Selection 7-3
7.3.3 Disposal Arrangements 7-4
7.4 WASTE TRANSPORTATION 7-4
7.4.1 Packaging Requirements 7-4
7.4.2 Selection of Transporter 7-4
7.4.3 Required Shipping Papers 7-4
7.5 DOCUMENTATION AND SUBMITTALS 7-4

8.0 FIELD SAMPLING AND QUALITY ASSURANCE PLAN 8-1

8.1 INTRODUCTION 8-1
8.2 SCOPE OF WORK 8-1
8.2.1 Drums and Other Containers 8-1
8.2.2 Transformers 8-2
8.2.3 Waste and Debris Materials 8-2
8.3 DATA QUALITY OBJECTIVES 8-3
8.3.1 DQO Level I 8-3
8.3.2 DQO Level C 8-3
8.3.3 Laboratory QA Plan 8-4
8.4 PROJECT ORGANIZATION 8-4
8.4.1 OHM Field Analytical Services 8-4
8.4.2 Project Management 8-4
8.5 FIELD SAMPLING PROCEDURES 8-5
8.5.1 Drum Sampling 8-6
8.5.2 General Hazcat Procedures 8-6
8.5.3 Stockpile Sampling 8-6
8.5.4 Post-Excavation Sampling 8-6
8.5.5 Transformer Oils 8-6
8.6 FIELD SAMPLING QUALITY CONTROL 8-6
8.6.1 Field Documentation 8-7
8.6.2 Chain-of-Custody Procedures 8-7
8.6.2.1 Sample Labels 8-7
8.6.2.2 Chain-of-Custody Forms 8-7
8.7 DECONTAMINATION PROCEDURES 8-8
8.8 ANALYTICAL PROCEDURES 8-8
8.8.1 Post-Excavation Soils 8-8
8.8.2 Stockpiled Materials 8-8
8.8.3 Drums 8-9
8.9 LABORATORY QUALITY CONTROL 8-9
8.9.1 Sample Handling in the Laboratory 8-9
8.9.2 Laboratory Sample Storage 8-10
8.9.3 Method-Specific Quality Control 8-11
8.9.4 Data Quality Evaluation 8-11
8.9.5 Corrective Action 8-11
8.10 DATA REDUCTION, VALIDATION, AND REPORTING 8-12
8.10.1 Data Reduction and Tabulation 8-12
8.10.2 General Procedures for Data Review/Validation 8-12
8.10.2.1 Level I Data 8-12
8.10.2.2 Level III Data 8-12
8.10.3 Data Reporting 8-13
8.10.4 Project Technical and Peer Reviews 8-15
8.11 HAZCAT PROCEDURES 8-16
8.11.1 Field Hazcat Analysis 8-16
8.11.2 OHM Hazcat Procedures 8-16
8.11.3 Benchscale Waste Blending 8-17
8.11.4 Waste Disposal Analysis 8-18

9.0 EROSION AND SEDIMENT CONTROL PLAN 9-1

10.0 WORK DOCUMENTATION 10-1

10.1 PROJECT MANAGEMENT DOCUMENTATION 10-1
10.2 SEARCH AND INSPECTION DOCUMENTATION 10-1
10.3 WASTE RETRIEVAL DOCUMENTATION 10-2
10.4 OTHER REMEDIATION WORK 10-2
10.5 WASTE DISPOSAL DOCUMENTATION 10-3

10.6 NAVY SITE INSPECTION DOCUMENTATION 10-3
10.7 CHANGE ORDER DOCUMENTATION 10-3
10.8 CONTRACTOR CLOSEOUT REPORT 10-3
10.9 ELECTRONIC DOCUMENTATION 10-3

TABLES

APPENDIX A - FORMS

APPENDIX B - SUBMITTAL SHOP DRAWINGS

APPENDIX C - STANDARD OPERATING PROCEDURES

APPENDIX D - QA/QC PLAN

APPENDIX E - HEALTH AND SAFETY PLAN

LIST OF TABLES

TABLE 1 MASTER LIST -- WASTE AND DEBRIS

TABLE 2 MASTER LIST -- WELLS

TABLE 3 MASTER LIST -- TRANSFORMERS

1.0 INTRODUCTION

OHM Remediation Services Corp. (OHM) is contracted by the Navy to perform site cleanup work at the former Naval Training Center at Bainbridge, Maryland (NTCB). This work is being performed under Contract No. N62470-93-D-3032, Delivery Order No. 137. The point of contact for this project is:

Mr. Frank Zepka
EFA - Chesapeake
901 M Street, S.E.
Building 212, Code 1812
Washington, D.C. 20374-5018
(202) 685-3279 voice
(202) 685-0979 fax

The scope of work is defined by the Navy "Scope of Work at NTC-Bainbridge" dated 4 February 1997 and the OHM proposal dated 28 January 1997. The portion of the Navy scope of work document regarding "Landfill Maintenance Actions" is not part of the current scope of work for this project and will be addressed in the future. In general, the scope of work for this project involves:

1. Searching approximately 266 locations for transformers, waste, and debris
2. Inspecting each location for safety, waste inventory, and recovery technique
3. Recovering found transformers, wastes, and debris
4. Segregating recovered materials at a staging area for disposal preparation
5. Transporting and disposing of recovered materials at proper off-base facilities
6. Abandoning nine groundwater monitoring wells and eleven backfill wells
7. Excavating POL soils at Building 760 along with related remediation work
8. Documenting the work including photography
9. Preparing pre-construction and post-construction submittals
10. Providing project administration and support.

The full effort of the project is not completely known by either OHM or the Navy. Field judgement and careful documentation will be necessary for a successful project. Approximately 35 locations are known to be inside buildings at NTCB. For safety reasons, every building entry will be considered structurally suspect and several locations are inside condemned buildings at the Tome Institute. At this time, the best estimate of the transformer and waste quantities anticipated to be found is summarized in Tables 1, 2 and 3. Additional waste materials may be identified as the project proceeds.

Documentation of the work is important to both the Navy and OHM. Daily progress reports will be sent by fax to Mr. Frank Zepka and weekly progress report to Mr. Zepka and Mr. Jerry Haste (LANTDIV - COTR). Standard forms will be completed for searches and recoveries of waste materials which will become the basis of the project final report. Safety inspections for structural, electrical, and other worker hazards will be documented. Photographs will be taken of waste materials and work locations before and after remediation. A grid map of NTCB has been prepared in AutoCAD to further document the work and aid in searching for waste materials (Appendix B).

2.0 SITE SETUP

OHM will establish an office trailer, crew break trailer, and decontamination trailer at the Camp Rogers drill field. This is the same trailer location previously used by OHM during Project No. 16006 (Delivery Order No. 014) in 1994 to 1995. OHM will connect the trailers to the existing drill field utility pole which contains a power disconnect box, power meter, and phone connection box. Electric power will be from Conawingo Power Company and phone service from Bell Atlantic. OHM will provide a project sign at or near the office trailer.

For security reasons, OHM may install a fence around the trailers. To provide on-base communications, OHM will establish a radio repeater and base station at the office trailer for communication with field teams by hand-held radios. Telephone lines will be provided to allow voice, fax, and modem data transmission communications. Porta johns and diesel fuel storage will be established at the trailer area.

The office trailer will be provided with several computers, including an AutoCAD drafting station, to document the progress of the work. Office work areas will be provided for the Site Supervisor, a shared area for the Project Manager and Project Accountant, Project Engineer/Quality Control (QC) Officer, Environmental Engineer, Project Chemist, Site Health and Safety Officer (HSO), and AutoCAD Draftsperson. Information required to be posted at OHM project sites (e.g., Davis-Bacon Wages, Discrimination Poster, etc.) will be displayed in the office trailer along with a Right-to-Know station.

Near Building 103, OHM will establish a Staging Area to receive and process the recovered waste materials prior to off-site disposal. The Staging Area will be provided with one or more bermed and high-density polyethylene (HDPE) geomembrane lined areas. These areas will be used for receiving unknown or contaminated waste materials until they can be logged, tested, emptied, or otherwise handled as necessary prior to their being segregated into rolloffs or other containers for disposal.

OHM plans to begin setting up the trailers and utility connections the week prior to general project mobilization. This is intended to allow effiecient field operations to quickly begin upon mobilization.

3.0 LOCATION SEARCHES

OHM will employ a stepwise, systematic approach to the location and identification of wastestreams, monitoring wells, and stained, potentially contaminated soils. Steps to be used by OHM to locate, flag/mark, and document waste materials and wells are described below.

3.1 STEP #1: STRUCTURAL HAZARD IDENTIFICATION

Prior to the start of search activities, a qualified OHM Structural Engineer will be briefed on structures where building entry will be required in order to retrieve wastestreams. A Job Safety Analysis (JSA) will be prepared for the structural inspection of the buildings, as well as any shoring or other structural improvements that may be necessary. The following procedure will be used:

- Review Site-Specific Health and Safety Plan (SSHSP)
- Don appropriate personal protective equipment (PPE) and perform a site walk
- Develop a work plan if multiple structures are involved
- Assemble tools for lighting, marking, and probing structure
- Enter abandoned structure
- Evaluate floor, walls, and overhead structures; overhead structures include roof, ceilings, lighting, and anything else support above floor level
- Probe structure to determine extent of corrosion and decay
- Clear floor of slip, trip, and fall hazards; mark but do not disturb chemical or friable hazards
- Pull down loose material above floor which could fall unexpectedly
- Design and supervise the installation of shoring necessary to insure worker safety and support equipment loads during recovery operations.

The Project Engineer will escort the Structural Engineer to buildings requiring entry for search activities. The Structural Engineer will carefully examine the structure in question, identify potential hazardous conditions, and provide written recommendations for access and, if necessary, building shoring or other improvements. Building entry will not be allowed until any necessary structural improvements are completed, inspected, and approved by the Structural Engineer. Approved building entry points will be clearly identified on the outside of the building using indelible high-visibility paint or other approved means. Unacceptable entry points will be sealed and clearly marked with indelible high-visibility paint. The Site HSO will be informed of all potential hazards, structural improvements, and acceptable building entry points. The Project Engineer will maintain an ongoing record of the status of structural inspections, any necessary shoring or other improvements, hazardous conditions and unacceptable points of entry, and approved access locations. The list of inspections and reports will be kept on site.

indicated on an OHM Master List which summarizes available information and identifies the search area and grid cell designation for each item to be recovered. Navy documents containing additional information are provided in the appendices.

3.5 STEP #5: IDENTIFICATION OF POTENTIAL HAZARDS BY SEARCH PERSONNEL

During an initial reconnaissance by the search team, potential physical, chemical, and electrical hazards will be identified by red flagging and indelible red paint. The Structural Engineer will be present to identify potential structural hazards during initial entry of all buildings and other structures. Refer to **Step #1** for important structural inspection requirements.

Also during the initial reconnaissance, an OHM Electrician will inspect all electrical appurtenances that may pose a hazard to site personnel. The Electrician will clearly flag and/or mark the appurtenance to indicate its current status. Refer to **Step #2** for important electrical inspection requirements.

The search team will document the hazard status of the appurtenance in a log which will be continually updated with the following information:

- Action taken
- Person(s) taking action with date and time
- Person providing documentation with date and time.

3.6 STEP #6: MARKING/FLAGGING SCHEME

Each item on the Master List will be located and identified by means of uniquely colored flagging and/or indelible paint. The identification number and grid cell designation will be indicated on the flagging using indelible marker, and/or on an adjacent surface using indelible paint. Upon removal of designated items, markings and flagging will be painted over or removed as appropriate to indicate that the item has been addressed.

A unique color, communicated to all personnel in advance, will be selected for flagging and/or marking potential hazards. Once the hazard has been addressed, the color will be changed to indicate a safe condition. Temporary warning signs, sealed in weather-resistant plastic, will be posted, where appropriate, by the Site HSO to identify potential hazards.

3.7 STEP #7: POST-REMOVAL AND POST-CLEANUP INSPECTIONS

Following removal of wastestream items, the Project Engineer or Project Chemist will re-inspect adjacent surfaces for evidence of staining/spillage. The Project Engineer will photograph and document any indications of staining, and will make a determination as to the extent of surface cleaning and/or soil removal, and whether any confirmation samples will be required. The Project Engineer will accomplish the following tasks:

- Document the extent of any surface cleaning
- Confirm that appropriate erosion control measures are in place
- Document the dimensions and total volume of any soil removal
- Verify and document that the area has been restored and seeded as appropriate
- Photograph the restored condition of the remediated area.

3.8 STEP #8: PRE- AND POST-CLEANUP PHOTOGRAPHY

OHM will provide photodocumentation throughout the course of site activities. Each photo will have a date stamp indicating the month, day, and year that the photo was taken. A daily log will be used to record all photos. The log will indicate the film roll number, the print number, date and time the photograph was taken, the person who took the photo, and a brief description of the photo. A "storyboard" will be positioned in the photo to describe the scene being photographed including the material name, OHM item number, and location. A brief description of the photo will be inked on the back of each print upon receipt from the developer. OHM will obtain photographs of the following:

- Each item/area containing wastes prior to any removal actions
- General area following removal of item and soil/concrete staining (if applicable)
- Remedial actions (e.g. Auto Hobby Shop)
- Before, during, and after conditions for monitoring well abandonment.

3.9 STEP #9: ONGOING AND FINAL DOCUMENTATION

Documentation will be updated at each step in the search process to reflect the following information at a minimum:

- Location
- Material(s) to be removed
- Potential hazards and manner in which hazard was addressed
- Contents of containers
- Quantities
- Flagging/marking status
- Removal status
- Soil or concrete contamination, if present, and manner in which it was addressed
- Tracking of photodocumentation.

4.0 WASTE AND DEBRIS REMOVAL

Waste and debris to be collected and removed from the base are indicated on Table 1, Master Waste Inventory List -- Waste and Debris. The approximate locations of the waste and debris are shown on the Shop Drawings.

OHM will employ a base grid system, field searches, flagging of waste and debris, and detailed documentation to locate and recover waste and debris within the base. As discussed in Section 3.0 of this document, an OHM structural engineer will assess buildings where necessary for structural integrity and safe access during the search phase of the project. OHM will then use approved building entry points to retrieve waste and debris.

4.1 BUILDING NO. 6 -- SODIUM HYPOCHLORITE DRUMS

OHM will recover five drums of sodium hypochlorite from a confined space within Building No. 6. The recovery will be performed based on a JSA conducted by the operations personnel and the Site HSO. Prior to confined space entry, the Site HSO will perform air monitoring to establish the appropriate respiratory protection. Based on the results of the air monitoring, which will be continued during the confined space entry, OHM laborers will wear either Level B or C PPE. Laborers will be equipped with Saranex-coated protective coveralls and nitrile gloves to prevent skin contact with the drum contents. A man retrieval system will be present during all activities in the confined space.

Liquids in the drums will be pumped to Department of Transportation (DOT)-approved 55-gallon closed-top steel drums (17E). A drum cart and a Case 580 or equivalent rubber-tire backhoe will be used to transfer drums and other materials to a lined 2-ton stake truck. All materials will then be transported to the Staging Area pending characterization and off-site disposal. The building entrances will be closed upon completion of the waste removal activities.

4.2 BUILDING 760 -- AUTO HOBBY SHOP

Cleanup activities at Building 760 include the removal of a salt stockpile, various containers including drums and oil filters, and POL-impacted soils west of the building. Bulk materials will be placed in a lined rolloff container spotted at Building 760. Containers and drums will be transported by 2-ton stake truck to the wastestream staging area.

The POL-impacted soils extend approximately 60 feet downslope from a pipe outfall situated on a wooded slope west of paved area surrounding Building 760. The swath of impacted soils is approximately 2 to 20 feet wide, and approximately 1 to 2 feet deep. The pipe at the outfall leads back toward Building 760. To gain access to the POL-impacted soils, OHM will cut the chain link fence located at the western limit of the pavement area. Silt fence will be installed at the anticipated downgradient limits of ground disturbance. A backhoe and hand tools will be used to clear vegetation and level the ground leading to the POL-impacted soils. The backhoe will then be used to excavate and transport the POL-impacted soil to the rolloff container. The backhoe will be also be used to load the salt stockpile into the rolloff container.

A backhoe equipped with a hoe ram attachment will be used to remove the asphalt over the pipe from Building 760 and, if necessary, concrete at the pits. The pipe will be removed, demolished, and placed in the bulk rolloff container. Trench spoils will be returned to the pipe excavation. Drains located in the oil change pit area will be investigated to determine where oil ultimately collected or discharged. The oil drain pipe system will be removed and placed in the rolloff container.

4.3 BUILDING 526

A pit measuring 16 feet by 16 feet by 20 feet deep is located inside Building 526. Non-hazardous well abandonment debris and clean on-site borrow will be used to fill the pit to grade. OHM will notify Engineering Field Activity (EFA)-Chesapeake if significant building alteration is needed to transport and place material within the Building 526 pit.

4.4 OTHER LOCATIONS -- VARIOUS MATERIALS/CONTAINERS

OHM will use the 2-ton stake truck and, if necessary, the backhoe to collect containers, debris, and other wastestreams located throughout the base. The bed of the stake truck will be lined to contain any spillage from containers. All drums, buckets, vessels, cylinders, and other containers will be secured with straps or other means to prevent loss or spillage of contents. All collected materials and containers will be transported to the wastestream staging area where they will be characterized and grouped for off-site disposal. When necessary, the backhoe will be equipped with a grappler to facilitate lifting and loading/unloading of large and/or heavy objects.

5.0 TRANSFORMER REMOVALS

Following inspection of electrical equipment located throughout the base, the Electrician will prepare a JSA for the de-energizing and disconnecting of active Navy electrical equipment indicated on Table 3, Master Waste Inventory List -- Transformers. The JSA will incorporate OHM lockout/tagout procedures presented in Health and Safety SOP No. 2-5, which is provided both in the **SOP book** and the OHM SSHSP. The approximate locations of the transformers listed in Table 3 are shown on the Shop Drawings. The following information is provided in Table 3 for each transformer:

- Search area designation
- Grid cell designation
- Navy transformer number
- Serial number
- Voltage
- Volume
- Where mounted
- Condition
- General location
- Polychlorinated biphenyl (PCB) concentration, if present.

Following preparation and review of the JSA for lockout/tagout, the Project Engineer, Site HSO, or other assigned person will accompany the Electrician during the implementation of the lockout/tagout procedure. The electrician will be assisted at all times by a designated individual equipped with a two-way radio.

A four-wheel drive self-propelled vehicle equipped with a personnel/equipment lift will be used during inspections, lockout/tagout, and equipment removal. Proper grounding will be employed at all times prior to and during lockout/tagout, liquid transfer, and equipment removal.

Prior to equipment removal, OHM will determine whether liquids within transformers and other electrical equipment contain PCBs based on prior sampling and testing by the Navy (see Table 3). Transformer liquids containing PCBs will be transferred to separate 55-gallon DOT-approved steel drums designated as containing PCBs. Transformer liquids without PCBs will be transferred to 55-gallon DOT-approved steel drums designated as not containing PCBs. Drums will be secured to a stake-bed truck and transferred to the Staging Area. Both sets of drums will then be sampled and tested for waste profiling.

Only after the electrical equipment has been verified as being de-energized and drained of liquids will operations personnel proceed with removal of the equipment. It should be noted that the Electrician will remove any de-energized electrical equipment in close proximity to other active non-Navy electrical lines or equipment.

Building 691 contains transformers and electrical equipment located in a room with limited access at the rear of the building. OHM will improve access for inspection and operational personnel based on recommendations from OHM's Structural Engineer. The liquids within the transformer and other equipment will be transferred to 55-gallon steel drums. Upon completion of the liquid transfer, OHM will employ tracked heavy equipment and properly-rated cables to remove the transformers and other equipment from the building. Once accessible to lifting equipment, the transformers and other appurtenances will be loaded onto trucks and transported to the wastestream staging area at Camp Rogers.

The concrete floor at Building 691, as well as at other buildings where spillage may have occurred, will be inspected for any staining that may include PCB contamination. OHM will attempt to quantify the extent of floor staining and, if approved by the Navy, will collect a chip sample from the stained area for PCB analysis. OHM will attempt to remove any staining of limited extent. The existence of more aerially extensive stained surfaces will be communicated to EFA-Chesapeake together with recommendations for delineation and cleanup.

Any deviation from the JSA will be documented for the electrical equipment in question. De-energized electrical appurtenances will be clearly identified using indelible spray paint and/or flagging secured to the utility pole. The Site HSO will be informed of all unanticipated hazards prior to proceeding with the lockout/tagout process. The Project Engineer will maintain an ongoing written and photographic record of the status of electrical equipment inspection, lockout/tagout, liquid transfer, and removal.

6.0 WELL ABANDONMENT

Monitoring wells to be abandoned will be identified and flagged during the search phase of the project. Nine 6-inch diameter groundwater monitoring wells to be abandoned are shown on the Shop Drawings and are included in Table 2, Master Waste Inventory List -- Wells. The groundwater monitoring wells will be abandoned by a well driller licensed in the State of Maryland. The same driller will abandon 11 other shallow wells that are associated with previous underground storage tank (UST) removals.

The OHM engineer will collect the well identification tag attached to the protective casing of each well **prior** to the start of well abandonment activities. The well tag identification number will be recorded for use in completing well abandonment forms.

Upon mobilization of the well driller and prior to the start of abandonment activities, the Project Engineer and Site HSO will meet with the drilling company crew to:

- Record names of drilling personnel and license number(s)
- Verify completion of requisite Occupational Safety and Health Administration (OSHA) training
- Review scope of work
- Review State of Maryland well abandonment regulations
- Prepare a JSA with the drillers
- Discuss applicable work or safety considerations.

An OHM engineer will escort the drillers to each well location, inspect the well abandonment activities to verify conformance with State of Maryland regulations, document well dimensions, depth, and well abandonment procedures. The engineer will also photograph abandonment activities and the general area at the end of abandonment activities.

On the day of well abandonment, the surface seal, protective casing, and bollards will be removed for each well immediately prior to its physical abandonment. The exposed casing will be cut flush with the ground surface. The drillers will then use a mixture of 94 pounds Portland cement, no more than 7 gallons of water, and 3 pounds by weight of sodium bentonite powder. Grout mixture specifications provided by the State of Maryland or applicable regulatory agency will supersede the aforementioned grout mixture. The entire length of screen and casing shall be pressure grouted flush with the ground surface using the tremie method. The grout mixture will be pumped into the well starting at the bottom. The tremie pipe or hose will be gradually withdrawn from the well while discharging the grout into the well. Measures will be taken to ensure that bridging and void spaces are not created in the well during well abandonment. OHM will dispose of all resulting well abandonment debris during proposed backfill activities within Building 526.

The drilling subcontractor will be responsible for complying with all applicable federal, state, county, and local requirements. The drilling subcontractor will complete and properly submit all necessary well abandonment forms. The well tag identification number corresponding to each well will be reported on the abandonment form. Copies of the completed abandonment forms must be forwarded by the drilling subcontractor to the OHM Project Engineer at the following address:

OHM Remediation Services Corp.
ATTN. Mr. Lawrence M. Colburn
200 Horizon Center Boulevard
Trenton, New Jersey 08691-1904
(Telephone No. 609-588-6336)

Additional copies of the completed well abandonment forms must be sent to appropriate regulatory agencies to include, at a minimum, the following address:

Cecil County Health Department
Environmental Health Services
ATTN: Ms. June Hill
401 Bow Street
Elkton, Maryland 21921
(Telephone No. 410-996-5160)

Shallow wells installed at locations where USTs were removed will also be abandoned by the well driller. The driller will cut the exposed casing flush with the ground surface, and fill the casing remaining in the ground with the aforementioned grout mixture. The driller will employ the same methods used at groundwater monitoring well locations. Well abandonment forms will not be required for these wells.

7.0 WASTE HANDLING PLAN

This section describes the procedures that will be used to handle the wastes collected for off-site disposal.

7.1 DESCRIPTION OF WASTES

Wastes which have been identified for removal and off-site disposal for this project are listed in the Master Waste Inventory Tables 1, 2 and 3, and include:

- Transformers and capacitors
- Compressed gas cylinders
- Labeled and unlabeled drums and containers of various size
- Miscellaneous debris
- POL and other stained soils.

7.2 WASTE CHARACTERIZATION

Each container or waste item collected for disposal will be characterized and given a unique tracking number which will be entered into the Master Waste Inventory Lists (Tables 1, 2, and 3) and on container logs. Characterization will be visual and analytical as appropriate. Analytical procedures are addressed in Section 8.0 [Field Sampling and Quality Assurance Plan (FSQAP)].

7.2.1 Transformer and Capacitor Characterization

Each transformer and/or capacitor found and collected will be taken to the Staging Area to be logged with a unique identification number (e.g., the Navy serial on the transformer plate or the transformer numbers from Table 3). The Master Waste Inventory List - Transformers (Table 3) will be used with a transformer log and updated as appropriate. Based on existing analytical data from previous Navy investigations (see Table 3), most transformers will be considered to be empty or to contain less than 50 parts per million (ppm) PCBs in any the dielectric fluid present. Transformers containing dielectric fluid will be drained and bulked into 55-gallon drums for disposal.

The following procedure will be used to prevent unknown oils, potentially containing PCBs, from being inadvertently mixed with "clean" oils or oils with <50 ppm PCB:

- Each transformer retrieved will have its serial number checked against the Navy's list (Table 3)
- Each transformer retrieved will then be checked to see if it contains any oil
- If the transformer is on the Navy list, and does not contain oil, it will be disposed of as scrap
- If the transformer is on the Navy list, does not contain oil, was previously tested by the Navy, and was non-detect for PCB, then the oil would be bulked into drums labeled as "Clean Oil"
- If the transformer is on the Navy list, does contain oil, was previously tested by the Navy, and any level of PCB was detected, then the oil would be bulked into drums labeled "Impacted Oil"

- If the transformer is either not on the Navy list, or contains oil that was not previously tested by the Navy, it will be labeled as "Unknown." Each unknown transformer will be separately sampled for laboratory testing of PCB concentration. Upon receipt of the PCB analytical report, the oil will be handled as follows:

  - Non-detect for PCB: Oil will be bulked into the "Clean Oil" drums
  - Less than 50 ppm PCB: Oil will be bulked into the "Impacted Oil" drums
  - 50 ppm or greater: Oil will be bulked into "TOSCA Oil" drums with PCB labels.

Should OHM be uncertain regarding how to properly proceed with a particular transformer or waste item, the item will be segregated and labeled with a tag reading "Unknown - RFI No. _____." This tag means a request for information form will be submitted by OHM to the Navy for guidance on how to proceed. The tag number will correspond to the request for information form number.

For assistance with questions regarding PCB material handling, OHM can contact Mr. Jose Jimenze at USEPA Region III office (Philadelphia) at (215) 566-2148. The USEPA also has a good reference document on this topic dated September 1993, Disposal Handbook by Roy F. Weston Engineers.

OHM will provide Fred Keer with additional information regarding the PCB field testing kits and their accuracy. Mr. Keer is located at MDE - WAS, 2500 Broening Highway, Baltimore, MD 21224; (410) 631-3418 voice and 3472 fax.

7.2.2 Compressed Gas Cylinder Characterization

Each compressed gas cylinder found and collected will be taken to the Staging Area and given a unique identification number and will be described on a cylinder log. The Master Waste Inventory List -- Waste and Debris (Table 2) will be updated based on the cylinder logs. The cylinders will be visually examined for labels or existing markings on the cylinder which indicate the contents. It is assumed that no unidentifiable cylinders will be encountered during this project.

7.2.3 Labeled and Unlabeled Container Characterization

OHM will log and identify all non-empty containers using the sampling and hazcatting procedures provided in the FSQAP. Once the initial hazcats have been completed, the OHM Project Chemist and Transportation and Disposal (T&D) Coordinator will assign bulk groups of like materials and determine disposal analysis for each group. The final disposal analysis required may vary depending upon the waste type and information available. For example, disposal analysis may not be required for containers which are labeled and the hazcat matches the description on the label. Further testing will be necessary for unlabeled containers which will be considered true unknowns. Examples of disposal analysis packages can be found in the FSQAP.

7.2.4 Miscellaneous Debris Characterization

All non-hazardous debris will be collected and composited into a single group for off-site disposal. This will include scrap metal, empty containers, wood, plastic, etc. Inherently hazardous debris, such as battery casings, will be segregated into separate groups as appropriate for disposal.

7.2.5 Stained Soil and Floor Characterization

At least one area of stained soil has been identified at Building 760: Auto Hobby Shop. This area of POL contaminated soils will be sampled and analyzed for Total Petroleum Hydrocarbon (TPH) to support off-site disposal. Any other areas encountered during the site investigation will be segregated and tested as its own waste stream. Staining on concrete pad and floors will be characterized considering the likely source of staining and chip samples will be collected and analyzed if necessary.

7.3 WASTE DISPOSAL

7.3.1 Determination of Required Treatment Technology

Each waste type generated during this project will require a different disposal method. These include:

Waste Type	Disposal Method
Transformers/capacitors	Recycle, incineration
Cylinders	Incineration (acetylene) Venting (carbon dioxide, oxygen)
Containers	Landfill, incineration, fuels blending
Debris	Landfill
Soils	Recycle, landfill

7.3.2 Disposal Facility Selection

OHM will select the final disposal facility for the non-radioactive waste based on several factors:

- Compliance with Comprehensive Environmental Response, Compensation, and Liability Act (CERCLA) Off-Site Policy
- Treatment, Storage, and Disposal Facility (TSDF) capacity to accommodate incoming waste
- Solicitation of bids using applicable Federal Acquisition Regulations (FARs)
- Verification of permits and insurance (at time of award).

Potential disposal facilities for this work are:

Transformers/capacitors	PPM (Laidlaw), Philadelphia, PA Clean Harbors, Baltimore, MD SD Myers, Tallmadge, OH
Cylinders	Rollins, Deer Park, TX BDT, Clarence, NY
Containers	[Disposal will depend upon final characterization]

Debris	WMX Waste Management, York, PA BFI, Morgantown, PA Chambers/USA Waste, Holsopple, PA
Soils	Clean Earth, New Castle, DE SoilSafe, Baltimore, MD SRP, Philadelphia., PA

7.3.3 Disposal Arrangements

The OHM T&D Coordinator will complete all necessary paperwork required for approval at the selected disposal facilities for all non-radioactive waste. This paperwork includes, but is not limited to, waste profiles, analytical data, and generator certifications. These documents will be forwarded to the proper Navy personnel for review and signature prior to transportation.

7.4 WASTE TRANSPORTATION

7.4.1 Packaging Requirements

There are no packaging restrictions on the shipment of soils and debris from this project. All soils and debris will be shipped via semi-dump trailers and/or rolloff containers.

All other waste will be shipped in their original containers. If the individual container is deemed not DOT shippable, OHM will utilize overpack drums for shipment.

7.4.2 Selection of Transporter

OHM will select waste transporters using applicable FARs during the solicitation process. OHM will solicit bids from only those vendors who are permitted to haul each particular waste type. Verification of permits will take place at time of solicitation.

7.4.3 Required Shipping Papers

The OHM T&D Coordinator will complete all necessary paperwork required for shipment of waste off site. These include hazardous waste manifest and land disposal restriction (LDR) certifications. All disposal shipping documents will be provided to Navy for review and signature as generator.

7.5 DOCUMENTATION AND SUBMITTALS

Formal submittals to the Navy pertaining to waste transportation and disposal will consist of the following:

- Waste profiles
- Weight tickets, TSDF manifest copy, and certificate of disposal.

The OHM project file will contain copies of:

- Hazardous waste manifests
- LDR certifications
- Certificates of disposal.

8.0 FIELD SAMPLING AND QUALITY ASSURANCE PLAN

8.1 INTRODUCTION

OHM is pleased to submit this Field Sampling and Quality Assurance Plan (FSQAP) to the U.S. Navy, in support of removal activities at the Naval Training Center, Bainbridge, Maryland. This FSQAP is written based upon the Bid Specifications for Delivery Order No. 137, under Contract No. N64270-93-D-3032. The FSQAP describes the data quality objectives, sampling methods, field documentation, analytical requirements, and quality assurance for project completion.

The following documents were used as guidance for the development of this FSQAP:

- Navy Facilities Engineering Service Center. Navy Installation Restoration Laboratory Quality Assurance Guide. February 1996.
- U.S. EPA SW-846. Test Methods for Evaluating Solid Waste. SW-846. Third edition, Volume 1. July, 1994.
- U.S. EPA SW-846. Test Methods for Evaluating Solid Waste. Third edition, Volume 2. November 1986.
- OHM Field Sampling Manual. March 1989.

NTCB ceased Naval training operations in 1976. During the late 1980s, part of the installation was used as a federal Job Corps site. During 1994-95, RAC contractor conducted environmental remedial actions at two sites on the installation: capping of the Old Landfill, and restoration of the Fire Training Area. A separate contract for building demolition and creation of an asbestos rubble landfill has been completed. At this time, NTCB property is idle and vacant, awaiting transfer to the State of Maryland. An Environmental Baseline Survey (EBS) is being conducted to facilitate the transfer process. As part of the EBS process, containers from various industrial/housekeeping products have been identified as improperly discarded or abandoned at NTCB.

8.2 SCOPE OF WORK

The scope of work for the Bainbridge site will include:

- Sampling of all unknown drums and small containers in each area of concern
- "Hazcat" analysis of each drum/container (see Section 8.9)
- Sampling and analysis of un-characterized oils for PCB
- Sampling and analysis of all on-site waste, debris, and visibly-stained soil
- Screening of post-excavation soils.

8.2.1 Drums and Other Containers

The previous site inspection has identified seventeen 55 gallon drums and one 35-gallon drum at various locations on-site. Several smaller containers (1-gallon to 5-gallon) have been located.

Five drums and one empty 1-gallon jug are labeled as sodium hypochlorite, 10 percent. Aqueous sodium hypochlorite is a corrosive oxidizer, used as bleach and as a disinfectant for swimming pool water.

OHM will obtain samples from each non-empty drum/container. These samples will be hazardous categorized, "hazcatted," by the OHM project chemist. Hazcatting involves bench-scale chemical tests, where the results are used to assign each drummed/containerized material to an appropriate wastestream.

The project chemist will prepare disposal samples for each wastestream. The results of disposal analysis will be used by the OHM T&D Coordinator for the removal of all drum/containerized materials.

8.2.2 Transformers

All Navy-owned transformers which were PCB-contaminated (conc. > 50 ppm) have been previously removed and disposed. OHM will remove an estimated 100 non-PCB contaminated transformers.

OHM will remove and collect all oil from each transformer, prior to removal. The oils will be collected in 55-gallon metal drums. OHM will sample the oil in each drum and generate a composite sample.

The oils contained within the transformers located at Building 693 require characterization. The oil from each transformer will be sampled and screened for PCBs. PCB screening will involve on-site use of Chlor-N-Oil kits.

The OHM sample technician use the kits in order to determine if chlorine is present at concentrations greater than 50 ppm. If the results are negative, then the oil and the transformer will be considered non-hazardous for PCBs.

If the oil tests positive for chlorine, the oil will be transferred to 55-gallon drums, for subsequent disposal characterization. Refer to Section 7.2.1 for detailed procedures.

8.2.3 Waste and Debris Materials

OHM will locate all waste materials and debris from NTCB building structures, and surrounding soil. The waste/debris materials will be staged, as indicated in the OHM work plan.

Each stockpile will be sampled for analysis of disposal parameters.

All visually-contaminated soil will be excavated and stockpiled. The stockpiled soil will be analyzed for disposal characterization.

One composite sample will be generated for every 50 cubic yards (CY) of stockpiled soil.

Once visually stained soils are removed, OHM will screen the soils in the walls and floor of the excavation. This screening will be by Ensys kit or photoionization detector (PID), dependant on whether the stain was due to transformer oil or another source, respectively. The result of the post-excavation analysis will be recorded. The Ensys kits will be analyzed in conjunction with 50 ppm standards.

OHM will perform an excavation of POL contaminated soils. This excavation will encompass an area of approximately 660 sq. ft. by an average of 2 feet in depth. Six samples will be collected from the floor of the excavation, each representing a 10-foot x 11-foot area. These samples will be analyzed for diesel range organic total petroleum hydrocarbons (DRO - TPH).

8.3 DATA QUALITY OBJECTIVES

Data quality objectives (DQOs) are qualitative and quantitative guidance used to assure that high quality data are obtained in support of project goals.

The DQOs relevant to this project include:

- DQO Level 1, which consists of minimal QC requirements. DQO 1 is pertinent to field generated screening data obtained with a PID and/or Ensys PCB kit. Drum hazcatting is performed within DQO 1.

- NEESA Level C is pertinent to POL post-excavation soil analysis. This data requires a higher level of QC, and is reported with a more complete deliverables package.

- NEESA Level C is also pertinent to all disposal samples. The data, however, is reported without special deliverables (reduced deliverables).

8.3.1 DQO Level 1

Level 1 is an EPA DOO which relates to field screening procedures. OHM will generate quality DQO level data by execution of the following tasks:

- Daily calibration of the PID
- Accurate and complete documentation of all soil screening (PID/Ensys) results.
- Periodic re-checking of PID results
- Testing of hazcat procedures with known materials
- Periodic hazcat re-testing.

8.3.2 DQO Level C

NEESA Level C data will include the use of QC samples:

- Duplicate QC samples, at a 10 percent frequency. The results of duplicate analysis are used to obtain a relative percentage difference (RPD). The RPD is an indicator of precision.

- Field rinsate samples, obtained on a daily basis. Distilled water is poured over the decontaminated sampling apparatus; the rinsate water is collected and transferred to the appropriate containers for analysis of the parameters of concern. The rinsate results are used to show that cross-contamination does not occur between sampling points.

- Laboratory QC, to include method blanks, laboratory duplicate samples, and matrix spike/matrix spike duplicate (MS/MSD) samples.

MS samples are used to access the accuracy of the analytical results.

MSD samples are used to provide a second evaluation of accuracy; upon comparison with the MS result, the MSD can be used to calculate a RPD (precision).

8.3.3 Laboratory QA Plan

The laboratory performs QC within an approved written internal QA/QC plan. The plan describes laboratory organization, laboratory procedures, QC samples, and addresses corrective action for problems encountered. This plan will be included in the appendices of this document once a laboratory has been selected.

OHM will be notified of any problems encountered and the corrective action(s) taken.

8.4 PROJECT ORGANIZATION

8.4.1 OHM Field Analytical Services

OHM provides sampling services through the Northeast Region Field Analytical Services (FAS) Group. This group is capable of providing a quality sampling effort, from the initial site characterization, through the sampling event. An FAS sample technician or field chemist will be assigned to collect samples. A senior project chemist and QC representative will review the data.

- *Sample Technician*--An OHM sample technician or field chemist will perform all site sampling activities. OHM sample technicians are trained in the accurate and complete documentation of the sampling event, and are familiar with all sampling procedures for various matrices. OHM will mobilize sample technicians who are based out of the Glen Allen, Virginia Divisional or the Trenton, New Jersey Regional office.

- *Project Chemist*--The project chemist provides support for the sample technician. This may be in the form of technical assistance, or for the procurement of sampling materials required. The sample technician consults with the project chemist, as needed, for assistance with sampling protocols.

- *Field Analytical Services Coordinator*--Michael J. Lacy, Ph. D. is the Field Analytical Services Coordinator for all LANTDIV delivery orders. Dr. Lacy is responsible for all facets of analytical data generation. He supervises analytical procurement and communicates with the laboratory, as necessary. He also provides oversight of field sampling and reviews analytical data. Dr. Lacy serves as a liaison between the project manager, sample technician and laboratory.

8.4.2 Project Management

- *Site Supervisor*--Fred Pouline will be the Site Supervisor. All on-site activities are coordinated by the OHM site supervisor. The sample technician will coordinate and communicate all sampling efforts with the site supervisor.

- *Project Manager*--Larry Stearns is the project manager and will serve to coordinate all project related decisions. The project chemist acts as a liaison between the laboratory and the project manager. The project manager will be consulted immediately if any sampling and analysis problems occur, and will be involved in the decision regarding corrective action to be taken.

- *QC Officer*--Larry Colburn will act as the QC officer. Responsibilities include:
  - Review of all sampling documentation, to include Chain-of-Custody Forms.
  - Communication with laboratory to assure proper laboratory procedures and QC protocols are adhered to.

8.5 FIELD SAMPLING PROCEDURES

The exact nature and extent of field sampling and analyses will be dictated by the site conditions experienced at NTCB. All transformers/capacitors located by OHM will be recorded on a transformer log and all compressed gas cylinders located by OHM will be recorded on a cylinder log. Materials to be disposed of off-site will undergo only those analyses listed in the following table which are necessary for disposal acceptance. Each anticipated type of sampling/analytical activity is discussed in the following sections.

GUIDELINES FOR DISPOSAL ANALYSES				
Analysis	Methods	Disposal Package		
		Incineration Disposal	Landfill Disposal	Wastewater Treatment
Total Solids	160.3	X	X	X
Corrosivity, pH	150.1, 9040, 9045	X	X	X
Flash Pt. Ignitability	1010, 1020	X	X	X
Reactive Sulfide	Sec. 7.3.4.1	X	X	X
Reactive Cyanide	Sec. 7.3.3.2	X	X	X
TCLP Volatile Organics	1311 - 8240, 8260	X	X	X
TCLP Semi-Volatile Organics	1311 - 8270	X	X	X
TCLP Metals with Copper & Zinc	1311 - 6010, 7000s	X	X	X
TCLP Pesticides/Herbicides	1311 - 8080/8015	X	X	X
TCL Volatile Organics	8240, 8260	X	X	X
TCL Semi-Volatile Organics	8270	X	X	X
TCL Pesticides/PCBs	8080	X	X	X
Herbicides (TCL list)	8150	X	X	X
Total Cyanide	9010	X	X	X
ALA CARTE DISPOSAL ANALYTICAL (to be performed if needed)				
% Ash	160.4	X		
BTU	ASTM	X		
Total Halides	9020	X		
Total Organic Halogens (TOX)	9020		X	
Total Sulfur	ASTM	X		
Paint Filter Test	90905		X	
Total Sulfide	3762, 9030			X
Total Phenols	420.1, 9065			X
TAL Metals and Molybdenum	6010, 7000s	X		X
BTEX	8240			
TPHC by IR	418.1			
TPHC by GC	8015 Mod. GRO & DRO			

8.5.1 Drum Sampling

OHM will obtain samples from each on-site drum by the use of 1/4-inch glass drum thieves/dip tubes. The sample technician, by placing his/her thumb over the top of the tube, will collect a sample of the containerized liquid in the tube. Upon release of the thumb, the sample is released and transferred to a 1-L glass sample jar.

Each drum located by OHM will have a drum log form completed for it. Custody of the sample jars and drum logs is transferred to the OHM employee who will perform hazcat analyses on the samples.

8.5.2 General Hazcat Procedures

All containerized materials will have a limited set of hazcat procedures performed on them. These procedures include:

- Determination of pH
- Determination of aqueous and/or dichloromethane/hexane solubility
- Oxidizer determination
- Determination of the presence of cyanide.

If a sample is determined to be organic in nature, the presence of peroxides will also be determined. The results of the hazcat analyses are recorded on the drum log.

OHM hazcat procedures are given in Section 8.9.

8.5.3 Stockpile Sampling

Visibly stained soils associated with a container or transformer will be understood to contain the same class of contamination as the container/transformer. Those stains which cannot be associated with a container/transformer may be sampled, drummed or placed in a general stockpile for disposal analyses.

8.5.4 Post-Excavation Sampling

Post-excavation sampling in the POL excavation will consist of a single sample point in each of six grids, sampled to 3 inches in depth. The samples will be collected using disposable, chemically-inert sample scoops which will be changed between sample points. The soil will be placed in a 125-ml precleaned sample jar as collected. Once the jar appears full, the side will be tapped to encourage settling of the contents, and more sample will be added. This procedure will help to minimize headspace in the jar.

8.5.5 Transformer Oils

The oil from each transformer will be drained into 55-gallon drums. The drums will then be sampled with dip tubes, as described in Section 8.5.1 above.

8.6 FIELD SAMPLING QUALITY CONTROL

All sampling and analysis will be performed with all applicable QA/QC procedures, as stipulated in EPA SW-846, *Test Methods for Evaluating Solid Waste*, Third Edition (as amended).

8.6.1 Field Documentation

All pertinent sampling and field survey information will be recorded in a logbook to facilitate reconstruction of events that occurred during closure activities. Logs will be kept in a waterproof bound notebook with numbered pages. All entries will be printed in waterproof ink. No pages will be removed and corrections will be made by drawing a single line through the incorrect data and initializing and dating the correction that was made to the side of the error. Entries in the logbook will contain, at a minimum, the following information:

- Location of sampling point
- Name and address of field contact
- Type of waste (i.e., soil, wastewater, etc.)
- Number and volume of samples taken
- Purpose of sampling (i.e., closure activities)
- Description of sampling point and sampling methodology
- Date and time of collection
- Collector's sample identification number
- Sample distribution and how transported (i.e., name of laboratory, UPS, FedEx)
- References, such as maps, photographs or sketches of the sampling site
- Field observations
- Any field measurements made (PID readings)
- Signatures of personnel responsible for observations.

8.6.2 Chain-of-Custody Procedures

8.6.2.1 Sample Labels

Each sample will be assigned a unique identification number, which will be marked on the sample container in waterproof ink. All samples will be clearly labeled to prevent misidentification in the field and at the laboratory. Sample labels will include the site name, sample number, name of collector, date and time of collection, and location of collection point. Labels will be printed clearly and legibly and provide enough information to enable cross reference with the analytical laboratory logbook.

8.6.2.2 Chain-of-Custody Forms

Chain-of-Custody Forms will be maintained by the contractor and included in the closure report. The original form will accompany the samples at all times after collection when the samples are not under the direct custody of field personnel. The samples are under custody of field personnel if: a) they are in the physical possession of the sampler; b) they are in view after being in possession; c) they are locked up or sealed securely to prevent tampering; or d) they are in a designated secure area. When sample possession is transferred, the individuals relinquishing and receiving will sign, date, and note the time on the Chain-of-Custody Form. When samples are shipped, field personnel will note the method of shipment, courier name, and waybill number, if possible, in the "remarks" box on the form. A copy of the waybill, if available, will be attached to the Chain-of-Custody Form. The laboratory must return the completed form documenting receipt of the undisturbed sample. The contractor will keep a copy of the form shipped to the laboratory until the original is returned.

The Chain-of-Custody Form will contain information to distinguish each sample from any other sample. Entries will be made in waterproof ink during sample collection. The Chain-of-Custody Form will include the following information:

- Signature of the person performing the sampling.
- The project for which sampling is being conducted
- The matrix being sampled
- The sampling date and time
- The specific sampling location
- The method of sample collection, including preservation techniques (if any)
- Significant observations made during the sampling process.

A typical "Chain-of-Custody Record" form is provided in the appendices.

8.7 DECONTAMINATION PROCEDURES

All non-disposable sampling equipment (augers, stainless steel trowels) will be decontaminated prior to, and between, sampling events by the following procedure:

- Detergent/tap water wash
- Distilled/de-ionized (DI) water rinse
- 10 percent nitric acid rinse
- DI water rinse
- Acetone rinse
- Air dry.

Use of these procedures will ensure that material transfer between sampling points is minimized; that is, cross-contamination will not occur. This will be verified by the use of equipment rinsate samples.

8.8 ANALYTICAL PROCEDURES

8.8.1 Post-Excavation Soils

All POL post-excavation soils will be analyzed for DRO-TPH using EPA/SW-846 Method 8015 modified.

8.8.2 Stockpiled Materials

All stockpiled soil, debris, and other on-site materials, will be characterized for disposal analysis. Disposal analyses are listed below:

DISPOSAL CHARACTERIZATION		
Analyte(s)	Method	
	Liquids	Solids
Ignitability	1010	1010 mod.
Reactivity - Sulfide & Cyanide	SW-846 Section 7	
Corrosivity	9040	9045

DISPOSAL CHARACTERIZATION		
Analyte(s)	Method	
	Liquids	Solids
TCLP Volatiles Semivolatiles Pesticides Herbicides Metals	 ZHE/8240 1311/8270 1311/8080 1311/8150 1311/6010	
Mercury	1311/7470	1311/7471
ZHE - zero headspace extraction		

8.8.3 Drums

The drums will be assigned compatibility groups (wastestreams), based upon the hazcat results. Typical wastestreams include:

- Organic liquid
- Organic solid
- Aqueous liquid
- Acid aqueous liquid
- Inorganic solid
- Oxidizer liquid
- Oxidizer solid
- Peroxide solid.

OHM will generate one (1) 1-L composite sample per wastestream. Wastestreams which are compatible may be combined (bulked), in order to reduce analytical costs. This decision is made by the OHM chemist upon consultation with the OHM T&D Coordinator.

Each wastestream will be analyzed for disposal characterization, as indicated in Section 8.7.2.

8.9 LABORATORY QUALITY CONTROL

Quality control related to the acquisition of chemical data has two main elements once the samples arrive at the laboratories. The first involves the documented handling of the samples as they are processed through the laboratory. The second area involves the project requirements for the method specified quality control. These two elements are discussed separately in the following two sections.

8.9.1 Sample Handling in the Laboratory

The proper handling begins with the document receipt by the laboratory of the samples from the field team. After signing the Chain-of-Custody Form, the sample receipt personnel will inspect the shipping containers and samples and document the condition in which the samples were received, especially noting any deficiencies in the "Remarks" box of the Chain-of-Custody Form and the sample log book.

Following the initial receiving tasks, the samples will be logged into a hardbound handwritten notebook and the computer data system. The data system generated work requests will be reviewed for accuracy and will be placed in the proper file.

In general, the receiving laboratory's sample custodian will:

- Examine the integrity of the shipping cooler and inner shipping containers, determine if the proper temperature has been maintained during shipment and verify the completeness of the Chain-of-Custody Form. If samples have been damaged during shipment, the remaining samples will be carefully examined to determine whether they were affected. Any samples affected shall also be considered damaged. It will be noted on the Analysis Request and Chain-of-Custody Form that specific samples were damaged and that the samples were removed from the sampling program. Field personnel will be notified as soon as possible that samples were damaged and that they must be resampled, or the testing program changed, and an estimate of the cause of damage.

- Compare samples received against those listed on the Chain-of-Custody Form.

- Verify that sample holding times have not been exceeded.

- Sign and date the Analysis Request and Chain-of-Custody Form and attach the waybill to it.

- Denote the samples in the laboratory sample log-in book with contains the following information:

  - Project identification number
  - Sample numbers
  - Type of samples
  - Date received in laboratory
  - Record of the verified time of sample receipt (VTSR)
  - Date put into storage after analysis is completed
  - Date of and disposition of sample disposal.

  The last two item will be added to the log when the action is taken.

- Notify the laboratory project manager of sample arrival.

- Place the completed Analysis Request and Chain-of-Custody Forms in the project file.

Holding times for the samples associated with this project will begin at the time of sample collection.

8.9.2 Laboratory Sample Storage

The primary considerations for sample storage are:

- Maintenance of prescribed temperature, if required, which is typically 4 degrees Celsius

- Extracting and/or analyzing samples within the prescribed holding time for the parameters of interest

The requirements for temperatures and holding times will be followed. Placing of samples in the proper storage environment is the responsibility of the Sample Custodian, or designee, who will notify the Laboratory Group/Team Leaders, or designated representative, if there are any samples which must be analyzed immediately because of holding-time requirements.

8.9.3 Method-Specific Quality Control

The methods of analysis are the standard methods that will be followed without deviation. The analytical methods have quality control requirements and/or recommendations and the laboratory will meet or exceed all method quality control as specified by the method. This includes calibration procedures and frequency (including the GC/MS tune date), laboratory quality control checks (internal standards and surrogate spike recoveries), detection limits, corrective actions and reporting.

8.9.4 Data Quality Evaluation

The data quality evaluation that will be completed at the laboratory will be a combination of contract compliance review and limited data evaluation. All data generated will be reviewed to ensure that they meet the written requirements. This review will be based on comparison of the information generated by the Laboratory with the written requirements of the Sampling and Analytical Plan for the project. The second portion of this process which deals more with data evaluation will involve review of the quality control results and preparation of a summary report qualifying the data. Review will include all quality control parameters such as holding times, detection limits, method blanks, surrogate recoveries, matrix spikes, matrix spike duplicates, interference check sample result, internal standard data, GC/MS tune data and the initial and continuing calibration data. The data evaluation summary is intended to provide a qualitative judgment of the overall integrity and usefulness of the data.

8.9.5 Corrective Action

Corrective Action is required if:

1. Any QC data is outside of the acceptable precision and/or accuracy
2. Blanks or laboratory control samples contain contaminants above acceptable limit
3. Undesirable trends are detected in spike or surrogate recoveries or RPD between duplicates
4. There are unusual changes in method detection limits
5. Deficiencies are detected by the QA department during internal or external audits or from the results of performance evaluation samples
6. Inquiries concerning data quality are received from the Contracting Officer

Corrective actions/procedures for out of control events in the following areas shall be found in the contract laboratory's Quality Assurance Plan. The laboratory QA/QC plan will include standard operating procedures for:

1. Incoming samples
2. Sample holding times
3. Instrument calibrations

4. Practical quantitation limits
5. Method QC
6. Calculation errors
7. On-site audits.

8.10 DATA REDUCTION, VALIDATION, AND REPORTING

8.10.1 Data Reduction and Tabulation

Data generated from the site activities can be grouped into two broad categories:

- Field data, such as data collected during Volatile Organic Compound (VOC)/PID screening; and
- Chemical data for environmental samples generated by the project laboratory and accompanying QA/QC data package deliverables as required for DQO Level II and Level III.

These data will be compiled and managed using a central project filing system. The field and laboratory data filing system will be a manual storage system established at the Contractor's field office at the Site. Field and laboratory data will be filed chronologically. Field log books, sample logs, sample data sheets, Chain-of-Custody Forms, laboratory log books, and laboratory calculation sheets will be labeled with a task number and date.

8.10.2 General Procedures for Data Review/Validation

8.10.2.1 Level I Data

Level I data (e.g., screening for VOCs) will be validated by reviewing calibration and maintenance records for field instruments and field logbook information associated with individual data sets to ensure that appropriate SOPs were followed. Data validation, therefore, will be qualitative, and will focus on whether field screening data are of acceptable quality based upon supporting documentation. Acceptance or rejection of data will be determined by the judgement of experienced field personnel familiar with the SOPs.

8.10.2.2 Level III Data

Generation of the Level III data will include the analysis of QA/QC samples, including blanks, calibration and reference standards, and possibly spiked samples in some instances. Items that will be reviewed to validate the data include:

1. Integrity and completeness of the data package,
2. Holding times from sample receipt at the laboratory to sample extraction and analysis or holding times from sample receipt to analysis, as appropriate,
3. Trip blank and laboratory method blank sample results,
4. Matrix spike, matrix spike duplicate, and replicate analyses,

5. Surrogate recoveries,

6. Field blank sample results, and

7. Field duplicate results.

Data validation will be a qualitative process. NEESA Level C will be used for data validation. Review of precision, accuracy, representativeness, completeness and comparability criteria will be included whenever measurement data are reviewed. The analytical laboratory will provide numerical precision and accuracy data that will be compared to the acceptance criteria. Precision and accuracy values for project data sets that are within the ranges for the type of sample and analytical method used will be considered acceptable. In some cases, data of apparently poor precision and/or accuracy may be somewhat useful. The judgement to accept such data, with appropriate qualifications, will be made by a data validator with appropriate technical expertise.

8.10.3 Data Reporting

The project laboratory will report the data in a certificate of analysis format, except for analyses requiring NEESA Level C deliverables. NEESA Level C deliverables are summarized in the following table. Sample analytical results and accompanying QA/QC sample results will be reported to the Project Coordinator on computer diskette files suitable for transfer to the spreadsheet data base.

Analytical data will be identified according to the project laboratory's procedures for establishing sample lots, so that sample analysis data can be matched to corresponding QA/QC samples, control charts, and calibration data.

NEESA LEVEL C DATA DELIVERIES		
Parameter	**Method Requirements**	**Deliverables**
Organics	Method blank spikes with results and control charts. Run with each batch of samples processed.	Control chart
	Results to be reported on CLP Form 1 or spreadsheet per Sect. 9. Sample results using CLP data flags.	Form 1 or Sect. 9 1/Sample chromatograms/ and mass spectra
	Surrogate recovery from samples reported on CLP Form 2. Surrogates to be used in volatiles, semivolatiles, pesticides/ PCB. For volatiles by GC, the names of surrogates should be changed to reflect the surrogate used.	Form 2
	Matrix spike/spike duplicate -1 spike and spike duplicate per 20 samples of similar matrix reported on Form 2.	Form 3
	Method blank reported on CLP Form 4.	Form 4 or Sect. 9
	For volatiles by GC, a similar format will be used as CLP Form 4 for blanks.	
	GC/MS tuning for volatiles/semi-volatiles. Report results on Form 5.	Form 5
	Initial calibration data reported on Form 6.	Form 6

NEESA LEVEL C DATA DELIVERIES		
Parameter	**Method Requirements**	**Deliverables**
	For volatiles by GC, the initial calibration data with response factors must be reported.	No Form
	For pesticide/PCB data Form 9 must be used for calibration data.	Form 9
	Continuing calibration GC/MS data reported on Form 7.	Form 7
	For volatiles GC data, the response factors and their percent differences from the initial must be reported.	No Form
	Internal Standard Area for Volatiles and Semivolatiles.	Form 8
	For pesticides/PCB data, the CLP Form 9 must be presented.	Form 9
	No chromatograms or mass spectra are presented for calibration. These data should be filed in the laboratory and available if problems arise in reviewing/validating the data. The calibration information should be available for checking during on-site audits.	
	Internal standard are for GC/MS analyses CLP Form VIII shall be supplied.	Form VIII
	Second column confirmation shall be done for all GC work when compounds are detected above reporting limits. Chromatograms of confirmation must be provided.	Chromatograms
Metals	Sample results with CLP flagging system.	CLP Form 1 or Sect. 9
	Initial and continuing calibration.	CLP Form 2, Part 1 only
	Blanks 10% frequency.	Form 3
	Method blank taken through digestion (1/20 samples of same matrix).	Form 3 or Sect. 9
	ICP interference check sample.	Form 4
	Matrix spike recovery (1 per 20 samples of similar matrix).	Form 5, Part 1
	Post-digestion spike sample recovery for ICP metals. Only done if predigest spike recovery exceed CLP limits.	Form 5, Part 2 (never used for GFAA work)
	Post-digestion spike for GFAA.	Recovery will be noted on raw data
	Duplicates (1 per 20 samples will be split and digested as separate.	Form 6 samples
	Method blank spike information will be plotted on control chart, one per batch of samples processed.	Control chart

NEESA LEVEL C DATA DELIVERIES		
Parameter	**Method Requirements**	**Deliverables**
Metals (cont.)	Standard addition. The decision process outlined in CLP page E-3 will be used to determine when standard additions are required.	Form 8
	Holding times.	Form 1
Wet Chemistry	Blank spike/1 batch.	Control chart
	Method Blank 1/batch.	Report result No format
	Sample results.	Report result No format
	Matrix spike/spike duplicate or calibration information.	Report result if applicable
	Calibration check- report percent RSD or percent difference from initial calibration.	No format

8.10.4 Project Technical and Peer Reviews

Project documents and deliverables will be reviewed by designated project personnel prior to submittal to the U.S. Department of the Navy QA/QC office. The review shall address whether:

- The report satisfies the scope of work.
- Assumptions are clearly stated, justified, and documented.
- References are cited for information utilized in report preparation that originated outside the document.
- The report correctly and accurately presents the results obtained by the project work.
- The tables and figures presented in the report are prepared, checked, and approved according to project QA/QC protocol.
- The figures presented in the report are dated and carry the initials of the appropriate project personnel and Contractor's Project Manager.
- The bases for recommendations and conclusions presented in the report are clearly documented.
- The report has been reviewed for correct punctuation, grammar, capitalization, and spelling.

Completion of technical and QA/QC reviews will be documented by the signature or initials of the reviewer.

In addition to technical and peer review of documents, project review meetings will be scheduled periodically by the Contractor's Project Manager. The intent of these project reviews is to assure scope

compliance and overall technical quality of the contracted services. Project reviews may be scheduled for key junctures in the project schedule that precede deliverables, such as initial scoping meetings, prior to finalization of work plans, immediately following completion of field programs, or during development of conclusions and recommendations. Documentation of the project review, especially regarding identified action items and their follow-up, is essential to maximizing the utility of these reviews.

8.11 HAZCAT PROCEDURES

8.11.1 Field Hazcat Analysis

Subsequent to the collection of discreet samples from each container, field hazcat analysis for the initial waste hazards will occur, followed by a bench scale bulking exercise of chemically similar wastes. Following is an overview of OHM's compatibility procedures.

OHM will perform hazcat analysis on each layer of every sample obtained. Hazcat analysis is performed to separate and classify the material into compatible groups.

Following is an overview of the field analysis procedures OHM will employ for preliminary hazard identification of the site wastes. Not all procedures are run on each sample.

8.11.2 OHM Hazcat Procedures

The following tests are performed by the on-site OHM chemist:

Water Solubility - The solubility of the sample in water is determined by adding 1 ml distilled/de-ionized (DI) water to 1-gram sample, in a 16-mm x 125-mm culture tube. The contents are stirred using a vortex mixer.

- The results are recorded as positive (water soluble), partially soluble, slightly soluble, or negative (water insoluble).

pH - The pH of the aqueous layer is determined using multi-colored indicating (or similar manufacturer) pH test strips.

- The color change on the strip is compared to a color-chart supplied by the manufacturer.
- The pH is determined to an accuracy of +/- one pH unit.
- Samples with a pH less than 4 are classified as acidic.
- Samples with a pH greater than 10 are classified as basic.

Hexane Solubility - The solubility of the sample in hexane/dichloromethane (50/50) is determined in an analogous method as described for water solubility. The hexane/DCM is prepared prior to the initiation of hazcatting.

- The sample is classified as organic with just the slightest solubility in hexane/DCM. This is to avoid organic material from contaminating an aqueous wastestream.

Organic Peroxide - The organic layer is tested for peroxides by placing a few drops of sample on a peroxide test strip (commercially available from EM Quant).

- The strip is allowed to dry. A drop of water is added after 30 seconds.

- A color change to blue is an indicator of an organic peroxide.
- The concentration of peroxide can be quantitated by comparison of the blue color to a color scale which accompanies the test strips.

Oxidizing material - The presence of an oxidizer is determined by, first, acidifying the sample with glacial acetic acid.

- A few drops of sample are placed on a potassium iodide-starch Test paper.
- A dark blue-black color formed within a few seconds is indicative of a strong oxidizer.
- A light-blue color, or color formation which requires up to 5 minutes, is indicative of a weak oxidizer.

Cyanide material The presence of cyanide in a sample is detected by the use of commercially available cyanide test kits (EM Quant).

- 1 gram of sample is diluted to 5 ml with DI water.
- The pH is adjusted to 7-8 by the addition of a measured quantity of phosphate buffer. Dissolution of the buffer is enhanced by stirring on a Vortex mixer.
- Five drops of pyridine-barbituric acid is added.
- A test strip is immediately immersed into the solution for 30 seconds.
- A positive test for cyanides is indicated by a color change to red on the test strip reaction zone.
- The concentration of cyanide can be approximated upon comparison of the color of the reaction zone to color chart which accompanies the test strip kit.

8.11.3 Benchscale Waste Blending

Following characterization of the samples, a benchscale bulking test of chemically like samples will be conducted. The samples are bulk tested by slowly adding a small proportional aliquot from each sample proportional to the actual waste volume in the same classification group. Samples from the same compatible group will be bulked in not more than 25 samples per "bulk sample." This bulked composite sample from compatible samples will be submitted for disposal analysis. A five minute waiting period follows each addition, during which the bulked samples are monitored for any gas evolution or exothermic reaction. If a reaction occurs, the bulking test is repeated without the addition of the reactive sample. Upon completion of the benchscale bulk test, the compatible groups are identified. The blending procedure is documented by the chemist.

By performing compatibility analysis and benchscale bulking tests, OHM reduces the amount of samples that require disposal analysis. This significantly lowers costs while providing an effective means of identifying material for disposal. These tests also provide information for performing on site bulking of wastes for disposal if this method is found to be more cost-effective than individual drum disposal.

8.11.4 Waste Disposal Analysis

The data received from the compatibility analysis will be reviewed by the project T&D Coordinator who will determine the most suitable disposal analysis to be performed. This determination will be based on the most cost-effective and feasible method of disposal for each wastestream.

All samples are prepared and analyzed according to SW-846 methods where available. If no SW-846 methods may be applied, another EPA-approved method will be used.

9.0 EROSION AND SEDIMENT CONTROL PLAN

OHM will install erosion and sediment control devices as necessary prior to earth disturbing activities. Erosion control measures will mainly be required prior to remedial activities in the Auto Hobby Shop (Building 760) area. OHM will install silt fence at the perimeter of the anticipated limits of disturbance prior to excavation of petroleum-impacted soils on the slope west of Building 760 and in paved areas south and west of the building. The silt fence will be installed in accordance with the silt fence detail provided in the Shop Drawings. Haybales or riprap may be used for stormwater velocity reduction inside the silt fence at the downgradient limit of the wooded slope area.

Other areas requiring soil removal will be evaluated on a case-by-case basis as to whether erosion control devices are necessary. Silt fence and other measures will typically be employed when ground disturbance on sloped surfaces is required.

At the completion of soil removal activities, OHM will return disturbed area to grade with fill from on-site borrow sources. A standard commercial seed mix consisting primarily of fescue and rye grass will be used to restore disturbed areas. Erosion blankets or hay will be placed over the disturbed areas to stabilize the ground surface and protect the seed through germination.

10.0 WORK DOCUMENTATION

Documentation of the work is essential because the Navy will eventually need to demonstrate to various regulatory agencies that the NTCB was cleaned of known wastes and transformers. In addition, certain documentation is necessary for OHM to properly manage the project and satisfy related contractual obligations.

10.1 PROJECT MANAGEMENT DOCUMENTATION

The OHM Site Supervisor will prepare a Daily Contractor Progress Report using the standard form contained in Appendix A and fax it to the following before 12:00 noon the next work day. The Site Supervisor will be assisted in the preparation of this report by the Project Engineer and Environmental Engineer as necessary.

1. Frank Zepka - (202) 685-0979 fax
2. Larry Stearns - (412) 963-2327 fax

The OHM Site Supervisor will prepare a Weekly Contractor Progress Report using the standard form contained in Appendix A and fax it to the following before 12:00 noon on Monday (or the next working day after the end of the work week). The Site Supervisor will be assisted in the preparation of this report by the Project Engineer and Environmental Engineer as necessary.

1. Frank Zepka - (202) 685-0979
2. Jerry Haste - (757) 322-8426
3. Larry Stearns - (412) 963-2327

The OHM Cost/Schedule Engineer will prepare a Weekly Cost Performance Report and updated schedule using the standard OHM formats and fax it to the following before 12:00 noon on Monday (or the next working day after the end of the work week). The Cost/Schedule Engineer will be assisted in the preparation of this report by the Project Manager, Site Supervisor, and Project Accountant as necessary.

1. Frank Zepka - (202) 685-0979
2. Larry Stearns - (412) 963-2327

The OHM Project Manager will prepare a Monthly Progress report for submittal to the Navy according to the established protocols under the LANTDIV RAC contract. The OHM Project Manager will be assisted in the preparation of this report by the Site Supervisor, Project Accountant, and OHM Cost/Schedule Engineer as necessary.

10.2 SEARCH AND INSPECTION DOCUMENTATION

Each location searched will be documented using the standard form in Appendix A. If no waste material is found, this form will become the only documentation for that particular search location and photographs will not be taken. If waste material is found, further inspection and documentation may include the following as appropriate:

1. Safety Inspection Form (includes structural, electrical, safety)
2. Photographs prior to waste removal
3. Transformer, Container, or Cylinder Logs

The Project Structural Engineer will prepare a structural safety assessment of all locations inside buildings and include detailed direction to the site supervisor for making repairs as appropriate to provide safe work conditions for waste retrieval.

The Electrician will prepare a electrical safety assessment of all electrical devices discovered and include detailed direction to the Site Supervisor for making electrical disconnections and de-energizing as appropriate to provide safe work conditions for waste retrieval.

The Site HSO will prepare a safety assessment of all locations were wastes are likely to present a safety or health hazard to workers and include detailed direction to the site supervisor for personnel protection or other means of providing safe work conditions for waste retrieval.

Photographs will be taken by, or under the direction of, the Project Engineer at each location where waste material is found to assure that the existing conditions are documented prior to waste retrieval. Photographs will be uniquely numbered, date stamped, and logged according to grid number, building number or other identifying location, and waste type.

The transformer, container, and cylinder logs will be prepared by, or under the direction of, the project chemist and will be used by the project engineer to update the Master Waste Lists (given in Tables 1, 2 and 3) which summarize the waste materials discovered for the entire project.

In the event that waste materials are discovered in addition to those listed in Tables 1, 2, or 3, these procedures will be followed for searching and documenting the additional wastes. In addition, a work directive will be prepared in accordance with Section 10.7 below.

10.3 WASTE RETRIEVAL DOCUMENTATION

Prior to waste retrieval, it will be the responsibility of the Site Supervisor to assure that for each location a detailed list of the wastes to be retrieved and necessary safety precautions, is complete and properly trained personnel, equipment, and materials are available to perform the work. This can be documented on a separate form, or in an OHM log book, provided the documentation format is consistent throughout the project.

During the retrieval of waste materials, the Project Engineer will assure that photographs of the work area are taken as necessary to document the remediation effort. Photographs will be date stamped, uniquely numbered, and logged according to grid location, building number or other identifying location, and waste type.

The Project Chemist will assure that waste materials received at the Staging Area are logged upon receipt, and are properly and safely handled for subsequent identification or disposal purposes. The Staging Area log will record the date received, grid location, building number or other identifying location information, waste type and quantity. This may be done with individual logs or with a master list.

10.4 OTHER REMEDIATION WORK

The Project Engineer will assure that other remediation work for the project is properly documented including well abandonment, Building 760 excavation and backfill work, sump backfilling, and related efforts. This documentation will include photographs and narrative summaries of work performed on a building specific basis.

10.5 WASTE DISPOSAL DOCUMENTATION

The Project Chemist will assure that waste identification and hazcat testing is properly documented using standard forms and analytical data reports. The Project Chemist will assure that the waste materials received at the Staging Area are logged according to the disposal container they are placed into, or according to their mode of disposal. In any event, the project chemist and T&D Coordinator will assure that the waste materials received at the Staging Area can be correlated to their final disposal facility and manifest.

10.6 NAVY SITE INSPECTION DOCUMENTATION

During the work, the Navy or their representatives will periodically inspect locations were waste removals have been completed by OHM and may collect samples for testing. It will be the responsibility of the project engineer to document the locations inspected and any further work or issues that need to be addressed by OHM to complete the work. This may be documented in the form of a punch-list or re-work list by location. All such documentation will be submitted to the site supervisor and faxed to Larry Stearns (412-963-2327) within 2 working days of the inspection.

10.7 CHANGE ORDER DOCUMENTATION

The standard variance request form in Appendix A will be used to request a change in the technical aspects of the project. The standard work directive form in Appendix A will be used to request changes in the scope of work that have a cost impact to the project. The standard request for information form in Appendix A will be used to request directions from the Navy regarding how to handle a situation. The standard request for overtime authorization in Appendix A will be used to request work hours outside of the normal 8 hours per day, five days per week. It is the responsibility of the project manager to provide these submittals to the Navy. The project manager will be assisted in the preparation of these documents by the Site Supervisor, Project Engineer, Project Accountant, OHM Cost/Schedule Engineer, and Senior Estimator as necessary.

10.8 CONTRACTOR CLOSEOUT REPORT

The Contractor Closeout Report will be prepared in draft form in the field during the work. It will consist of narrative regarding project introduction, search and retrieval methods, summary of excavation and related remediation work, waste segregation methods, transportation and disposal report, well abandonment report, quality control report, master list tables of wastes retrieved by type, and appendices including field and laboratory analytical data reports, search reports, disposal documents, well abandonment reports, photographs, and NTCB base drawings showing the locations of wastes retrieved during the work.

Four copies of the draft Contractor Closeout Report will be submitted to the Mr. Frank Zepka within 2 weeks of demobilization, or substantial completion of the work including final disposal, which ever date is later. It will be the responsibility of the project manager to prepare the Contractor Closeout Report. The project manager will be assisted in this work by the various members of the project team as necessary.

10.9 ELECTRONIC DOCUMENTATION

In an effort to minimize the handling of paper and to keep current with project documentation, electronic storage of project documentation will be used to the extent possible. The Project Manager will establish a file on the OHM network, "Scooby" common drive, for saving project documents on a daily or frequent basis. This will require remote access capabilities from the project office trailers and data phone lines. The project manager will issue specific directions regarding this policy upon mobilization.

TABLES

TABLE 1

Master List - Waste and Debris

ID No.	SOW Ref.	Area	Grid	Location	Type	Description	Quantity	Units	Size	Units	Staining
D-1	II-B(3)(d)	2	D-2	inside Bldg. 7	Cylinder	Freon	14	cylinders	Unknown	Unknown	Unknown
D-2	II-B(1)	2	E-2	inside Bldg. 6	Drums	Sodium Hypochorite	5	drums	250	gal	Unknown
D-3	Appx. A:Table 2-1	2	E-3	Bldg. 88	Drum	unlabeled empty	1	drum	55	gal	NO
D-4	Site Walk J. Haste	3	B-6	SW corner of Bldg. 103	MANHOLE	secure with heavy steel plate	1	plate	4' x 4'	square	Unknown
D-5	II-B(7)(a)	3	C-4	inside Bldg. 526	BACKFILL	16'x16'x20'deep; backfill with	190	CCY			Unknown
						rubble from well pads/bollards					
D-6	II-B(7)(b)	3	C-4	woods near Bldg. 505A	MANHOLE	secure with heavy steel plate	1	plate	4' x 4'	square	Unknown
D-7	Appx. A:Table 2-1	3	C-4	Bldg. 505A	Container	empty: sodium hypochlorite	1	jug	1	gal	YES
D-8	Appx. A:Table 2-1	3	C-4	Bldg. 529	Container	unlabeled bucket	1	bucket	5	gal	NO
D-9	Appx. A:Table 2-1	3	C-4	Bldg. 529	Cylinder	pressurized oxygen cylinders	2	cylinders	Unknown	Unknown	Unknown
D-10	Appx. A:Table 3-1	3	C-4	outside Bldg. 526; in woods	Tank	AST	1	tank	Unknown	Unknown	NO
D-11	Appx. A:Table 2-1	3	C-5	Bldg. 502B	Container	unlabeled containers	2	containers	1	gal	NO
D-12	Appx. A:Table 2-1	3	C-5	Bldg. 502B	Container	unlabeled containers	1	containers	5	gal	NO
D-13	Appx. A:Table 2-1	3	C-5	Bldg. 502B	Container	unlabeled containers	2	jugs	1	gal	NO
D-14	Appx. A:Table 2-1	3	C-6	Bldg. 631	Container	unlabeled cans	several	cans	1	gal	YES
D-15	Appx. A:Table 2-1	3	C-6	Bldg. 631	Container	unlabeled cans	several	cans	5	gal	YES
D-16	Appx. A:Table 2-1	3	C-6	Bldg. 103B	Container	empty can: paint stripper	1	can	1	gal	YES
D-17	Appx. A:Table 2-1	3	C-6	Bldg. 103	Container	empty, unlabeled	several	bucket	5	gal	NO
D-18	Appx. A:Table 2-1	3	C-6	Bldg. 103	Cylinder	acetylene gas cylinder	1	cylinders	Unknown	Unknown	Unknown
D-19	Appx. A:Table 2-1	3	C-6	Bldg. 102	Drum	unlabeled	1	drum	35	gal	NO
D-20	Appx. A:Table 2-1	3	C-6	Bldg. 102	Container	floor sealer	1	bucket	5	gal	NO
D-21	Appx. A:Table 2-1	3	C-6	Bldg. 102	Debris	automotive battery	1	battery	standard	auto	NO
D-22	Appx. A:Table 2-1	3	C-6	Bldg. 102	Drum	empty	1	drum	55	gal	NO
D-23	Appx. A:Table 2-1	4	D-4	Bldg. 506A	Container	unlabeled cans	several	cans	1	gal	YES
D-24	Appx. A:Table 2-1	4	D-4	Bldg. 506A	Container	unlabeled cans	several	cans	5	gal	YES
D-25	Appx. A:Table 2-1	4	E-4	Bldg. 35	Drum	unlabeled plastic drum	1	drum	55	gal	NO
D-26	Appx. A:Table 3-1	4	E-4	in basement of Bldg. J-J	Tank	AST	1	tank	Unknown	Unknown	NO
D-27	II-B(3)(e)	4	F-4	outside Bldg. 31	Debris	empty metal dumpster	1	dumpster	6	cyd	Unknown
D-28	Appx. A:Table 2-1	4	F-4	inside Bldg. 31	Cylinder	oxygen and acetylene	2	cylinders	Unknown	Unknown	NO
D-29	Appx. A:Table 2-1	4	F-4	inside Bldg. 31	Drum	unlabeled, full	1	drum	55	gal	NO
D-30	Appx. A:Table 2-1	5	H-5	Bldg. 692E	Container	empty	1	bucket	5	gal	NO
D-31	Appx. A:Table 2-1	5	H-5	Bldg. 692E	Container	empty	several	cans	1	gal	NO
D-32	Appx. A:Table 2-1	5	H-5	Bldg. 692E	Container	partially filed: gasoline	1	can	Unknown	Unknown	NO
D-33	Appx. A:Table 2-1	5	H-5	Bldg. 692E	Drum	partially filed: solids	1	drum	55	gal	NO
D-34	II-B(8)	7	C-7	Bldg. 629	Debris	abandoned aluminum trailer	1	each	20'	long	Unknown
D-35	Site Walk J. Haste	7	C-7	Bldg. 629	Debris	abandoned gasoline pump	1	each	4'	high	Unknown
D-36	Appx. A:Table 2-1	7	C-9	Bldg. 404A (or 404B ??)	Drums	unlabeled drums	10	drums	55	gal	NO
D-37	Appx. A:Table 2-1	7	C-9	Bldg. 404A (or 404B ??)	Container	unlabeled drums	10	drums	5	gal	NO
D-38	Appx. A:Table 2-1	7	D-9	Bldg. 693	Container	gasoline	1	can	Unknown	Unknown	Unknown
D-39	Appx. A:Table 2-1	7	D-9	Bldg. 693	Debris	automotive battery	1	battery	standard	auto	Unknown

TABLE 1

Master Lst - Waste and Debris

ID No.	SOW Ref.	Area	Grid	Location	Type	Description	Quantity	Units	Size	Units	Staining
D-40	Appx. A:Table 2-1	7	D-9	Bldg. 693	Cylinder	acetylene gas cylinder	6	cylinders	Unknown	Unknown	Unknown
D-41	Appx. A:Table 2-1	7	D-9	Bldg. 693: Machinery Room	Stains	Floor	Unknown	Unknown	Unknown	Unknown	YES
D-42	Appx. A:Table 2-1	7	D-9	Bldg. 693	Cannister	R-22	1	canister	Unknown	Unknown	Unknown
D-43	Appx. A:Table 2-1	7	D-9	Bldg. 693	Cylinder	fire extinquishers	4	each	Unknown	Unknown	Unknown
D-44	II-B(4)	7	E-7	west of Bldg. 760	Waste	POL impacted	70	BCY	700	sfl	YES
D-45	II-B(4)	7	E-7	inside Bldg. 760	Waste	pile of white salt - north side	15	tons			Unknown
D-46	II-B(4)	7	E-7	inside Bldg. 760	Drum	empty drum - east side	1	drum	55	gal	YES
D-47	Appx. A: Table 3-1	7	E-7	inside (??) Bldg. 760	Stains	waste oil containers; stained floor	Unknown	Unknown	Unknown	Unknown	YES
D-48	II-B(4)	7	E-7	along fence line at Bldg. 760	Debris	automobile oil filters	~ 50	filters	1	quart	Unknown
D-49	II-B(4)	7	E-7	south of SE corner Bldg. 760	Drum	rotted drum carcass	1	drum	55	gal	Unknown
D-50	Appx. A:Table 2-1	10	D-11	Bldg. 659A	Drum	partially filled: tar like substance	2	drums	55	gal	NO
D-51	Appx. A:Table 2-1	10	D-11	Bldg. 659A	Drum	partially buried	1	drum	55	gal	NO
D-52	Appx. A:Table 2-1	13	G-11	between Bldg. 713 and 714	Drum	full: unlabeled	1	drum	55	gal	NO

TABLE 2

Master List - Wells

ID No.	SOW Ref.	Area	Grid	Location	Type	Description	Quantity	Units	Size	Units
W-1	II-B(5)	4	D-5	Bldg. 620	monitoring	MW-620	1	well	6-inch	diameter
W-2	II-B(5)	4	D-6	Bldg. 624	monitoring	MW-624	1	well	6-inch	diameter
W-3	II-B(5)	4	F-4	Bldg. 600	monitoring	MW-600	1	well	6-inch	diameter
W-4	II-B(5)	4	F-5	Bldg. 618	monitoring	MW-618	1	well	6-inch	diameter
W-5	II-B(5)	7	D-9	Bldg. 693	monitoring	MW-693	1	well	6-inch	diameter
W-6	II-B(6)	7	E-7	SE corner of Bldg. 760	backfill	white plastic pipe	1	pipe	4-inch	diameter
W-7	II-B(5)	8	F-7	Bldg. 844	monitoring	MW-844	1	well	6-inch	diameter
W-8	II-B(5)	10	D-10	Bldg. 683	monitoring	MW-683	1	well	6-inch	diameter
W-9	II-B(5)	10	D-10	Bldg. 688B	monitoring	MW-688B	1	well	6-inch	diameter
W-10	II-B(5)	11	H-8	Bldg. 306	monitoring	MW-306	1	well	6-inch	diameter
W-11										
W-12										
W-13										
W-14										
W-15										
W-16										
W-17										
W-18										
W-19										
W-20										
W-21										

TABLE 3

Master List - Transformers

Area	Grid	Trans. No.	Serial No.	KVA	GAL	Mount	1982 Condition	Location	PCB's	Notes
12	L-9	1-A	66AB7475	75	Unknown	Pole	good	Bldgs. 1050/1077	0.41	
12	L-9	1-B	66AC3177	15	Unknown	Pole	good	Bldgs. 1050/1077	0.62	
12	L-9	1-C	66AC8180	15	Unknown	Pole	good	Bldgs. 1050/1077	NO	
12	L-9	2	66A35612	50	Unknown	Pole	good	behind Bldg. 1040	NO	
12	K-9	3	66AB7326	37.5	Unknown	Pole	minor leaks	behind Bldg. 1039	0.2	
12	K-8	4	66AB5617	50	Unknown	Pole	good	behind Bldg. 1038	0.2	
12	K-8	5	66AB7483	75	Unknown	Pole	good	behind Bldg. 1037	0.62	
12	K-8	6	66AB2138	100	Unknown	Pole	good	behind Bldg. 1036	0.1	
12	K-8	7	66AB7479	75	Unknown	Pole	good	behind Bldg. 1035/1036	NO	
12	J-8	8	66AB5614	50	Unknown	Pole	good	behind Bldg. 1035/1022	0.22	
12	J-8	9	66AB6220	50	Unknown	Pole	good	behind Bldg. 1022	NO	
12	J-8	10	66AB2139	100	Unknown	Pole	good	behind Bldg. 1021	NO	
12	J-8	11	66AB2135	100	Unknown	Pole	good	behind Bldg. 1020/1019	0.77	
12	J-8	12	66AB6216	50	Unknown	Pole	good	behind Bldg. 1019/1018	0.1	
12	J-8	13-A	66AB7481	75	Unknown	Pole	good	Bldgs. 1051/1043	0.31	
12	K-9	13-B	66AC8183	15	Unknown	Pole	good	Bldgs. 1051/1043	0.82	
12	K-9	13-C	66AC8176	15	Unknown	Pole	good	Bldgs. 1051/1043	NO	
12	K-9	14	66AB6217	50	Unknown	Pole	good	between Bldgs. 1051/1042	NO	
12	J-9	15	66AB5616	50	Unknown	Pole	good	behind Bldg. 1044	0.15	
12	J-9	16	66AB7480	75	Unknown	Pole	good	behind Bldgs. 1045/1044	NO	
12	J-9	17	66AB7474	75	Unknown	Pole	good	behind Bldg. 1045	NO	
12	J-8	18	66AB2136	75	Unknown	Pole	good	between Bldgs. 1023/1034	NO	
12	J-8	19	66AB2141	100	Unknown	Pole	good	between Bldgs. 1025/1034	NO	
12	J-8	20	66AB7428	75	Unknown	Pole	good	behind Bldg. 1049	NO	
12	K-8	21-A	66AB7484	75	Unknown	Pole	good	between Bldgs. 1049/1030	NO	
12	K-8	21-B	66AC8184	15	Unknown	Pole	good	between Bldgs. 1049/1030	NO	
12	K-8	21-C	66AC8178	15	Unknown	Pole	good	between Bldgs. 1049/1030	NO	
12	K-8	22	66AB2140	100	Unknown	Pole	good	behind Bldgs. 1032/1033	NO	
12	K-9	23	66AB2137	100	Unknown	Pole	good	behind Bldgs. 1030/1049	0.02	
13	F-11	24-A	275743	25	22	Pole	fair/good	behind Bldgs. 713/714	NO	
13	F-11	24-B	288166	25	22	Pole	fair/good	behind Bldgs. 713/714	NO	
13	F-11	25-A	293942	15	12.5	Pole	fair/good	next to Bldg. 678	NO	
13	F-11	25-B	28440	15	12.5	Pole	fair/good	next to Bldg. 678	NO	
13	F-11	25-C	L1094-55	15	12.5	Pole	fair/good	next to Bldg. 678	NO	
10	E-11	26	287356	15	12.5	Pole	fair/good	next to Bldg. 705	NO	
10	D-11	27-A	292101	7.5	8.5	Pole	fair/good	front of Bldg. 695	NO	
10	D-11	27-B	271998	7.5	8.5	Pole	fair/good	fornt of Bldg. 695	NO	
10	D-11	27-C	273199	7.5	8.5	Pole	fair/good	front of Bldg. 695	NO	
10	D-11	28-A	277356	25	22	Pole	minor leaks	between Bldgs. 666/668	NO	
10	D-11	28-B	277361	25	22	Pole	minor leaks	between Bldgs. 666/668	NO	

TABLE 3

Master List - Transformers

Area	Grid	Trans. No.	Serial No.	KVA	GAL	Mount	1982 Condition	Location	PCB's	Notes
10	D-11	28-C	277364	25	22	Pole	minor leaks	between Bldgs. 666/668	NO	
10	C-11	29-A	287360	15	12.5	Pole	fair/good	between Bldgs. 676/658	NO	
10	C-11	29-B	67355	15	12.5	Pole	fair/good	between Bldgs. 676/658	NO	
10	C-11	29-C	287357	15	12.5	Pole	fair/good	between Bldgs. 676/658	NO	
10	C-10	30-A	280613	15	12.5	Pole	fair/good	perimeter at end of Bldg. 656	NO	
10	C-10	30-B	292450	15	12.5	Pole	good	perimeter at end of Bldg. 656	NO	
10	C-10	30-C	285069	15	12.5	Pole	good	perimeter at end of Bldg. 656	NO	
9	B-10	31-A	2389549	75	53.5	Pole	fair/good	between Bldgs. 680/649	NO	
9	B-10	31-B	1224188	75	53.5	Pole	fair/good	betewwn Bldgs. 680/649	NO	
9	B-10	31-C	2389546	75	53.5	Pole	fair/good	between Bldgs. 680/649	NO	
10	C-10	32-A	292336	75	35	Pole	fair/good	behind Bldg. 718, next to 681	NO	
10	C-10	32-B	292342	75	35	Pole	fair/good	behind Bldg. 718, next to 681	NO	
10	C-10	32-C	292352	75	35	Pole	fair/good	behind Bldg. 718, next to 681	NO	
10	C-10	33-A	251768	5	7	Pole	fair/good	behind Bldg. 681	NO	
10	C-10	33-B	251779	5	7	Pole	fair/good	behind Bldg. 681	NO	
10	C-10	33-C	260536	5	7	Pole	fair/good	behind Bldg. 681	NO	
10	D-10	34-A	293044	25	20	Pole	fair/good	between Bldgs. 688A/683	NO	
10	D-10	34-B	293046	25	20	Pole	fair/good	between Bldgs. 688A/683	1.55	
10	D-10	34-C	293045	25	20	Pole	fair/good	between Bldgs. 688A/683	NO	
10	D-10	35-A	2186882	50	35	Pole	minor leak	between Bldgs. 688/694	0.1	
10	D-10	35-B	2452843	50	32	Pole	good	between Bldgs. 688/694	NO	
10	D-10	35-C	2186880	50	35	Pole	good	between Bldgs. 688/694	NO	
10	C-10	36-A	294253	50	33	Pole	minor leak	behind Bldg. 684	NO	
10	C-10	36-B	294247	50	33	Pole	minor leak	behind Bldg. 684	NO	
10	C-10	36-C	294246	50	33	Pole	minor leak	behind Bldg. 684	NO	
10	E-11	37-A	2406328	100	71	Pole	good	old trailer park, 940 area	0.72	
10	E-11	37-B	2406326	100	71	Pole	good	old trailer park, 940 area	NO	
10	E-11	37-C	2406325	100	71	Pole	good	old trailer park, 940 area	NO	
9	B-10	38-A	294142	37.5	25	Pole	good	infront of Bldg. 649	NO	
9	B-10	38-B	294138	37.5	25	Pole	good	infront of Bldg. 649	NO	
9	B-10	38-C	294141	37.5	25	Pole	good	infront of Bldg. 649	NO	
7	C-9	39-A	245201	15	17	Pole	good	Bldg. 403	NO	
7	C-9	39-B	245203	15	17	Pole	good	Bldg. 403	NO	
7	C-9	39-C	245197	15	17	Pole	good	Bldg. 403	NO	
7	C-8	40-A	233571	100	56	Pole	good	backside of center Bldg. 401	NO	
7	C-8	40-B	233570	100	56	Pole	good	backside of center Bldg. 401	NO	
7	C-8	40-C	233569	100	56	Pole	good	backside of center Bldg. 401	NO	
7	C-8	41-A	252306	10	12	Pole	fair	between Blds. 413/414	0.2	
7	C-8	41-B	253205	10	12	Pole	minor leaks	between Bldgs. 413/414	0.99	
7	C-8	41-C	253210	10	12	Pole	fair	between Bldgs. 413/414	0.15	

TABLE 3

Master List - Transformers

Area	Grid	Trans. No.	Serial No.	KVA	GAL	Mount	1982 Condition	Location	PCB's	Notes
7	D-7	42-A	292947	37.5	25.5	Pole	good	between Bldgs. 409/410	0.05	
7	D-7	42-B	292948	37.5	25.5	Pole	good	between Bldgs. 409/410	NO	
7	D-7	42-C	292946	37.5	25.5	Pole	good	between Bldgs. 409/410	NO	
7	D-8	43-A	292339	75	55	Pole	fair	behind Bldgs. 402/402A	NO	
7	D-8	43-B	281546	75	55	Pole	fair	behind Bldgs. 402/402A	NO	
7	D-8	43-C	281550	75	55	Pole	fair	behind Bldgs. 402/402A	NO	
7	D-8	44-A	6117382	100	Unkrown	Pole	good	side of Bldg. 402	NO	
7	D-8	44-B	6117380	100	Unkrown	Pole	good	side of Bldg. 402	NO	
7	D-8	44-C	6117381	100	Unkrown	Pole	good	side of Bldg. 402	NO	
7	D-8	45-A	294222	10	11.5	Pole	good	between Bldgs. 402/404A	NO	
7	D-8	45-B	294125	10	11.5	Pole	good	between Bldgs. 402/404A	NO	
7	D-8	45-C	291778	10	11.5	Pole	good	between Bldgs. 402/404A	NO	
7	D-9	46	5BL9091	15	Unkrown	Pole	good	end of Bldgs. 425/407	NO	
11	F-9	47-A	282909	10	11.5	Pole	fair	between Bldgs. 308/330	NO	
11	F-9	47-B	254187	10	11.5	Pole	fair	between Bldgs. 308/330	NO	
11	F-9	47-C	282596	10	12.5	Pole	fair	between Bldgs. 308/330	NO	
11	G-10	48-A	287361	15	12.5	Pole	fair	end of Bldg. 323, acr fr 307	NO	
11	G-10	48-B	287363	15	12.5	Pole	fair	end of Bldg. 323, acr fr 307	NO	
11	G-10	48-C	287382	15	12.5	Pole	fair	end of Bldg. 323, acr fr 307	NO	
11	G-10	49-A	L109413	15	12	Pole	fair	between Bldgs. 323/322	0.01	
11	G-10	49-B	L109426	15	12	Pole	fair	between Bldgs. 323/322	0.41	
11	G-9	50-A	2368898	75	42	Pole	fair/good	behind Bldg. 339	0.31	
11	G-9	50-B	2389547	75	42	Pole	fair/good	behind Bldg. 339	0.2	
11	G-9	50-C	2389543	75	42	Pole	fair/good	behind Bldg. 339	NO	
11	G-8	51-A	292344	75	35	Pole	leaks	between bldgs. 853/302A	NO	
11	G-8	51-B	292345	75	35	Pole	fair(rusty)	between Bldgs. 853/302A	NO	
11	G-8	51-C	292348	75	35	Pole	fair(rusty)	between Bldgs. 853/302A	NO	
*	*	*	*	*	*	*	*	Missing Data #'s 52-60	*	No Data Availible
10	E-10	61	16882	25	Unkrown	Pole	fair	end of circ. on trailer court	NO	
12	J-10	62-A	66AB7477	75	Unknown	Pole	good	behind Bldg. 1014/1052	NO	
12	J-10	62-B	66AC8181	15	Unkrown	Pole	good	behind Bldg. 1014/1052	NO	
12	J-10	62-C	66AC8185	15	Unkrown	Pole	good	behind Bldg. 1014/1052	NO	
12	J-10	63	66AB7478	75	Unknown	Pole	good	behind Bldg. 1013/1052	NO	
12	J-10	64	66AB7327	37	Unknown	Pole	good	behind Bldg. 1012 & wtr twr	NO	
12	J-10	65	66AB7476	75	Unkrown	Pole	good	behind Bldg. 1011	NO	
11	H-10	66	66AB5613	50	Unkrown	Pole	good	behind Bldg. 1009	NO	
12	J-10	67	66AB6219	50	Unknown	Pole	good	behind Bldg. 1008	NO	
12	J-10	68	66AB7472	75	Unkrown	Pole	good	behind Bldg. 1007	NO	
12	J-9	69	66AB2134	100	Unknown	Pole	good	behind Bldg. 1006	0.22	
11	H-10	70	6117379	100	Unkrown	Pole	fair/good	behind Bldgs. 1003/1004	NO	

TABLE 3
Master List - Transformers

Area	Grid	Trans. No.	Serial No.	KVA	GAL	Mount	1982 Condition	Location	PCB's	Notes
11	H-9	71	66AB7473	75	Unknown	Pole	good	behind Bldg. 1001	NO	
11	H-10	72	66AB6218	50	Unknown	Pole	good	behind Bldg. 1009/1010	NO	
7	E-7	73-A	L109456	50	35	Pole	fair/good	next to athletic field	NO	
7	E-7	73-B	L109455	50	35	Pole	fair/good	next to athletic field	NO	
7	E-7	73-C	L109453	50	35	Pole	fair/good	next to athletic field	NO	
7	E-7	74-A	L1094-5-2	50	35	Pole	fair	next to swimming pool	NO	
7	E-7	74-B	L1094-5-1	50	35	Pole	fair	next to swimming pool	NO	
7	E-7	74-C	L1094-5-4	50	35	Pole	fair(old leak)	next to swimming pool	NO	
7	E-7	75-A	292356	75	35	Pole	poor	next to auditorium, Bldg. 625	NO	
7	E-7	75-B	292354	75	35	Pole	poor	next to auditorium, Bldg. 625	NO	
7	E-7	75-C	292337	75	35	Pole	poor	next to auditorium, Bldg. 625	NO	
7	F-7	76-A	5957931	50	Unknown	Pole	fair/good	between BOQ 842/844	NO	
7	F-7	76-B	5979736	50	Unknown	Pole	fair/good	between BOQ 842/844	NO	
7	F-7	76-C	5979730	50	Unknown	Pole	fair/good	between BOQ 842/844	NO	
8	F-6	77-A	284433	15	12.5	Pole	fair/good	between Bldgs. 835/839	NO	
8	F-6	77-B	284453	15	12.5	Pole	fair/good	between Bldgs. 835/839	NO	
8	F-6	77-C	285064	15	12.5	Pole	fair/good	between Bldgs. 838/839	NO	
8	F-7	78-A	292358	75	35	Pole	fair/good	between Bldgs. 855/839	NO	
8	F-7	78-B	292332	75	35	Pole	fair/good	between Bldgs. 855/839	NO	
8	F-7	78-C	292328	75	35	Pole	fair/good	between Bldgs. 855/839	NO	
8	G-7	79-A	264021	25	22	Pole	fair/good	between Bldgs. 854/831	NO	
8	G-7	79-B	275737	25	22	Pole	fair/good	between Bldgs. 854/831	NO	
8	G-7	79-C	277654	25	22	Pole	fair/good	between Bldgs. 854/831	NO	
8	G-6	80-A	294252	50	33	Pole	fair/good	between Bldgs. 836/801	NO	
8	G-6	80-B	294250	50	33	Pole	fair/good	between Bldgs. 836/801	NO	
8	G-6	80-C	294248	50	33	Pole	fair/good	between Bldgs. 836/801	NO	
8	G-6	81-A	293945	15	12.5	Pole	fair/good	between Bldgs. 834/801	NO	
8	G-6	81-B	293948	15	12.5	Pole	fair/good	between Bldgs. 834/801	NO	
8	G-6	81-C	293943	15	12.5	Pole	fair/good	between Bldgs. 834/801	NO	
8	G-7	82-A	24063293	100	71	Pad	fair	Bldg. 832	NO	
8	G-7	82-B	2406329	100	71	Pad	fair	Bldg. 832	NO	
8	G-7	82-C	2406321	100	71	Pad	fair	Bldg. 832	NO	
8	G-7	83-A	102382	150	Unknown	Pad	poor-empty	Bldg. 832	NO	
8	G-7	83-B	102388	150	Unknown	Pad	poor-vandl'd	Bldg. 832	NO	
8	G-7	83-C	102381	150	Unknown	Pad	poor	Bldg. 832	NO	
8	F-6	84-A	1060851	37.5	Unknown	Pole	poor	end of Bldg. 841	NO	
8	F-6	84-B	1060864	37.5	Unknown	Pole	good	end of Bldg. 841	NO	
8	F-6	84-C	1060849	37.5	Unknown	Pole	good	end of Bldg. 841	NO	
7	D-9	85-A	1812275	150	115	Vault	good	water plant	0.1	
7	D-9	85-B	1812376	150	115	Vault	good	Bldg. 633	NO	

TABLE 3

Master List - Transformers

Area	Grid	Trans. No.	Serial No.	KVA	GAL	Mount	1982 Condition	Location	PCB's	Notes
7	D-9	85-C	1812273	150	115	Vault	good	Bldg. 693	NO	
7	D-9	85-D	286654	5	8	Vault	good	Bldg. 693	NO	
7	D-9	85-E	286665	5	8	Vault	good	Bldg. 693	NO	
7	D-9	85-F	287821	5	8	Vault	good	Bldg. 693	NO	
n/a	n/a	86-A	7522807	200	99	Vault	good	Bldg. 690	unknown	river water intake
n/a	n/a	86-B	7522508	200	99	Vault	good	Bldg. 690	unknown	river water intake
n/a	n/a	86-C	7522809	200	99	Vault	good	Bldg. 690	unknown	river water intake
n/a	n/a	86-D	302215	3	6.5	Vault	good	Bldg. 690	NO	river water intake
n/a	n/a	86-E	302214	3	6.5	Vault	good	Bldg. 690	NO	river water intake
n/a	n/a	86-F	302213	3	6.5	Vault	good	Bldg. 690	NO	river water intake
8	F-6	87-A	294235	25	22.5	Pole	good	Bldg. 809	NO	
8	F-6	87-B	294233	25	22.5	Pole	good	Bldg. 809	NO	
8	F-6	87-C	294238	25	22.5	Pole	good	Bldg. 809	NO	
8	H-6	88-A	L-121713	50	37	Pole	good	Bldg. 817	NO	
8	H-6	88-B	L-121711	50	37	Pole	good	Bldg. 817	NO	
8	H-6	88-C	L-121712	50	37	Pole	good	Bldg. 817	NO	
8	H-6	89-A	284443	15	12.5	Pole	good	Bldg. 818	NO	
8	H-6	89-B	266434	15	12.5	Pole	good	Bldg. 818	NO	
8	H-6	89-C	266445	15	12.5	Pole	good	Bldg. 818	NO	
8	H-7	90-A	691357	15	16	Pole	good	Bldg. 865	NO	
8	H-7	90-B	691355	15	16	Pole	good	Bldg. 865	NO	
8	H-7	90-C	691356	15	16	Pole	good	Bldg. 865	NO	
8	G-7	91	691359	15	16	Pole	good	btwn bld. 824/826 Young Cir	NO	
5	G-5	92	1799958	7.5	60	Pole	good	Fire Fighting Sch. Bldg. 861	NO	
5	G-5	93	Capacitor	7.5	Unknown	Pole	good	pole 900, Fire Sch. Cap. Bnk	unknown	
5	H-5	94-A	271986	8.5	8.5	Pole	good	sewage plant, bldg. 692	NO	
5	H-5	94-B	272005	7.5	8.5	Pole	good	sewage plant, Bldg. 692	NO	
5	H-5	94-C	272000	7.5	8.5	Pole	good	sewage plant, Bldg. 692	NO	
5	H-5	95-A	6832615	5	6.5	Pole	good	sewage plt bld. 692 South en	0.67	
5	H-5	95-B	6832530	5	6.5	Pole	good	sewage plt bld 692 South en	0.37	
5	H-5	95-C	6537135	5	6.5	Pole	good	sewage plt bld 692 South en	NO	
4	E-5	96-A	295444	75	35	Pole	poor	Bldg. 601 Somers&Preble rd	NO	
4	E-5	96-B	295442	75	35	Pole	poor	Bldg. 601 Somers&Preble rd	NO	
4	E-5	96-C	295443	75	35	Pole	poor	Bldg. 601 Somers&Preble rd	NO	
4	F-5	97-A	294254	50	33	Pole	fair	End of Bldg. 618A	NO	
5	F-5	97-B	294249	50	33	Pole	fair	End of Bldg. 618A	NO	
5	F-5	97-C	294251	50	33	Pole	fair	End of Bldg. 618A	NO	
4	E-5	98-A	262311	10	12	Pole	good	between Bldg. 604/618	NO	
4	E-5	98-B	253202	10	12	Pole	good	between Bldg. 604/618	NO	
4	E-5	98-C	253000	10	12	Pole	good	between Bldg. 604/618	NO	

TABLE 3

Master List - Transformers

Area	Grid	Trans. No.	Serial No.	KVA	GAL	Mount	1982 Condition	Location	PCB's	Notes
4	E-5	99-A	L109445	100	72	Pole	good	between Bldg. 618/619	NO	
4	E-5	99-B	L109444	100	72	Pole	fair/good	between Bldg. 618/619	NO	
4	E-5	99-C	L109445	100	72	Pole	fair/good	between Bldg. 618/619	NO	
4	E-5	100-A	1246324	100	Unknown	Pole	fair/good	Next to Bldg. 99	NO	
4	E-5	100-B	1246323	100	Unknown	Pole	fair/good	Next to Bldg. 618/619	NO	
4	E-5	100-C	1246320	100	Unknown	Pole	fair/good	between Bldgs. 618/619	NO	
4	E-5	101-A	2412687	100	71	Pole	fair/good	between Bldgs. 603/Chapel	NO	
4	E-5	101-B	312931	100	60	Pole	fair/good	between Bldgs. 603/Chapel	NO	
4	E-5	101-C	2412686	100	71	Pole	fair/good	between Bldgs. 603/Chapel	NO	
4	E-5	102-A	959425	75	45	Vault	fair/good	Bldg. 720	unknown	Previously Removed
4	E-5	102-B	959426	75	45	Vault	good	Bldg. 720	unknown	Previously Removed
4	E-5	102-C	959427	75	45	Vault	good	Bldg. 720	unknown	Previously Removed
4	E-5	102-D	breaker	200	45	Vault	good	Bldg. 720	NO	
4	E-5	102-E	breaker	500	45	Vault	far/old leak	Bldg. 720	NO	
4	E-5	102-F	breaker	500	45	Vault	far/old leak	Bldg. 720 across fr bldg. 611	NO	
4	E-5	103-A	1246321	100	Unknown	Pole	far/old leak	between bldgs. 720/622	NO	
4	E-5	103-B	12412688	100	71	Pole	far/old leak	between Bldg. 720/622	NO	
4	E-5	103-C	1246319	100	71	Pole	good	between Bldg. 720/622	NO	
4	D-5	104-A	292341	75	35	Pole	good	between Bldgs. 109/621	NO	
4	D-5	104-B	292326	75	35	Pole	good	between Bldgs. 109/621	NO	
4	D-5	104-C	292355	75	35	Pole	good	between Bldgs. 109/621	NO	
4	D-5	104-D	294223	10	11.5	Pole	fair/good	between Bldgs. 109/621	NO	
4	D-5	104-E	294122	10	11.5	Pole	fair/good	between bldgs. 109/621	NO	
4	D-6	105-A	954784	75	Unknown	Pole	fair(rusty)	between bldgs. 821/622	NO	
4	D-6	105-B	954783	75	Unknown	Pole	fair/good	between Bldgs. 621/622	NO	
4	D-6	105-C	954781	75	Unknown	Pole	fair/good	between Bldgs. 621/622	NO	
4	D-6	106-A	951787	75	Unknown	Pole	fair	Between Bldgs. 629/623	NO	
4	D-6	106-B	951779	75	Unknown	Pole	fair	Between Bldgs. 629/623	NO	
4	D-6	106-C	951788	75	Unknown	Pole	fair	Between Bldgs. 629/623	NO	
4	D-6	107-A	292333	75	35	Pole	good/fair	Between Bldgs. 624/623	NO	
4	D-6	107-B	295446	75	35	Pole	good/fair	between Bldgs. 624/623	NO	
4	D-6	107-C	295438	75	35	Pole	fair/good	between Bldgs. 622/624	4.82	
4	D-6	108-A	n/a	Unknown	Unknown	Pole	fair/good	between Bldgs. 622/624	NO	
4	D-6	108-B	14620	167	Unknown	Pole	fair/good	between Bldgs. 622/624	NO	
4	D-6	108-C	14621	167	Unknown	Pole	fair/good	between Bldgs. 622/624	NO	
4	E-6	109-A	954778	75	Unknown	Pole	fair	behind Bldg. 622	42	
4	E-6	109-B	954780	75	Unknown	Pole	fair	behind Bldg. 622	NO	
4	E-6	109-C	954786	75	Unknown	Pole	fair	behind Bldg 622	NO	
4	E-6	110	282904	10	11.5	Pole	fair	behind Bldg. 622	NO	
4	D-6	111	Capacitor	Unknown	Unknown	Pole	fair/good	behind Bldgs. 622/624	NO	

TABLE 3

Master List - Transformers

Area	Grid	Trans. No.	Serial No.	KVA	GAL	Mount	1982 Condition	Location	PCB's	Notes
4	D-6	112-A	292338	75	35	Pole	good	behind Bldg. 622/624	NO	
4	D-6	112-B	292357	75	35	Pole	good	behind Bldg. 624	NO	
4	D-6	112-C	292340	75	35	Pole	good	behind Bldg. 624	NO	
4	D-6	113	253199	10	12	Pole	good	behind Bldg. 624	1	
7	C-7	114-A	285065	15	12.5	Pole	fair	fire station	NO	
7	C-7	114-B	266430	15	12.5	Pole	fair	fire station	NO	
7	C-7	114-C	285063	15	12.5	Pole	fair	fire station	NO	
5	F-5	115	13347341	37.5	24	Pole	fair	athletic field @ main gate	0.02	
5	F-4	116	1834736	37.5	24	Pole	fair	athletic field @ main gate	NO	
5	F-4	117-A	132155	Unknown	1	Pole	fair	athletic field @ main gate	unknown	sealed switches
5	F-4	117-B	132158	Unknown	1	Pole	fair	athletic field @ main gate	unknown	sealed switches
5	F-4	118	254179	10	12	Pole	fair	housing next to athletic fld	2	
5	F-4	119	282902	10	11.5	Pole	fair/good	housing next to athletic fld	NO	
7	D-7	120	794224	10	11.5	Pole	fair/good	corner of Evans & Fiske	NO	
7	D-7	121-A	1851064	1250	557	Pad	fair/good	Bldg. 628, main substation	NO	
7	D-7	121-B	1810256	1250	557	Pad	fair/good	bldg. 628. main substation	NO	
7	D-7	121-C	1810259H	1250	557	Pad	fair/good	Bldg. 628. main substation	NO	
7	D-7	121-D	1810258H	1250	557	Pad	fair/good	Bldg. 628. main substation	NO	
7	D-7	121-E	1810255H	1250	557	Pad	fair/good	Bldg. 628. main substation	NO	
7	D-7	121-F	1810254H	1250	557	Pad	fair/good	Bldg. 628. main substation	NO	
7	D-7	121-G	1810257H	1250	557	Pad	fair/good	Bldg. 628. main substation	NO	
7	D-7	122-A	4929255	30	100	Pole	good	Bldg. 628. main substation	NO	
7	D-7	122-B	4929257	30	100	Pole	good	Bldg. 628. main substation	NO	
7	D-7	122-C	4929258	30	100	Pole	good	Bldg. 628. main substation	NO	
7	D-7	122-D	4929559	30	100	Pole	good	Bldg. 628. main substation	NO	
7	E-7	123	B639981	5	100	Roof Top	good	Top of Bldg. 625	NO	
7	D-7	124-A	272002H	7.5	8.5	Pole	fair/good	across from 628, btwn. 626	NO	
7	D-7	124-B	271989H	7.5	8.5	Pole	fair/good	across from 628, btwn. 626	NO	
7	D-7	124-C	272015H	7.5	8.5	Pole	fair/good	across from 628, btwn. 626	NO	
7	D-7	125	293274H	5	6.5	Pole	fair/good	otherside of 628 from 122	NO	
7	D-7	126	293941	15	12.5	Pole	fair/good	front of 628, next to old hous	NO	
7	D-7	127	SBL9089	15	Unknown	New	new	old barn behind 628. bld. #38	NO	
7	D-6	128	SBL9090	15	Unknown	New	new	old barn behind 628. bld. #38	NO	
3	C-6	129	Capacitor	Unknown	Unknown	Pole	good	ac. from 708 on bainbrdge b	unknown	Previously Removed
4	E-4	130-A	292331	75	35	Pole	fair	next to bldg. 602	NO	
4	E-4	130-B	292334	75	35	Pole	fair	next to bldg. 602	NO	
4	E-4	130-C	292329	75	35	Pole	fair	next to bldg. 602	NO	
4	E-4	131-A	5333841	15	11.9	Pole	good	between Bldgs. 602/632	NO	
4	E-4	131-B	5333842	15	11.9	Pole	fair	between Bldgs. 602/632	NO	
4	E-4	131-C	5333840	15	11.9	Pole	fair	between Bldgs. 602/632	2	

TABLE 3

Master List - Transformers

Area	Grid	Trans. No.	Serial No.	KVA	GAL	Mount	1982 Condition	Location	PCB's	Notes
4	D-5	132-A	272014H	7.5	8.5	Pole	minor leaks	Bldg. 620	2.03	
4	D-5	132-B	273190H	7.5	8.5	Pole	minor leaks	Bldg. 620	NO	
4	D-5	132-C	273190H	7.5	8.5	Pole	fair/leaks	Bldg. 620	15.02	
4	D-5	133	284452	15	12	Pole	fair	end of Bldg. 750	10.01	
4	D-4	134-A	337292	37.5	25.5	Pole	fair	Bldg. 750	NO	
4	D-4	134-B	337293	37.5	25.5	Pole	fair	Bldg. 750	NO	
4	D-4	134-C	337291	37.5	25.5	Pole	fair	Bldg. 750	NO	
4	D-4	135	14645	Unknown	5	Pole	poor	corner of Time & Benson Rd	unknown	empty
4	D-4	136	4939844H	6.6	65	Pole	fair	next to Bldg. 506	NO	
4	E-4	137	284451H	15	12.5	Pole	fair	in front of JJ house, tone rd	NO	
5	F-4	138	Unknown	15-25	Unknown	Pole	good	Near main gate	NO	
3	C-5	139-A	L1217-1H	100	72	Pole	good	Bldg. 110	0.52	
3	C-5	139-B	L1217-3H	100	72	Pole	good	Bldg. 110	0.1	
3	C-5	139-C	L1217-2H	100	72	Pole	leaking	Bldg.110	0.03	
3	C-6	140-A	1104896	75	Unknown	Pole	fair/good	behind Bldg. 708	NO	
3	C-6	140-B	11040895H	75	Unknown	Pole	fair/good	behind Bldg. 708	NO	
3	C-6	140-C	1104897H	75	Unknown	Pole	fair/good	behind Bldg. 708	NO	
3	C-6	141-A	2412680H	167	90	Pole	fair/good	between Bldgs. 102/708	NO	
3	C-6	141-B	2412681H	167	90	Pole	fair/god	between Bldgs. 109/708	NO	
3	C-6	141-C	2412679	167	90	Pole	fair/good	between Bldgs. 109/708	NO	
3	B-6	142-A	2186878	50	35	Pole	fair	near Bldg. 103, end rear 101	4	
3	B-6	142-B	2186877H	50	35	Pole	fair	near Bldg. 103, end rear 101	0.72	
3	B-6	142-C	2186881H	50	35	Pole	fair	near Bldg. 103, end rear 101	1.01	
3	B-6	143-A	2406322H	100	71	Pole	good	behind Bldg 101, next to 105	5	
3	B-6	143-B	2406327H	100	71	Pole	good	behind Bldg 101, next to 105	NO	
3	B-6	143-C	2406324H	100	71	Pole	good	behind Bldg. 101, next to 105	NO	
3	B-5	144-A	292330	75	33	Pole	fair	Bldg. 116	2.1	
3	B-5	144-B	292353	75	35	Pole	fair	Bldg. 116	NO	
3	B-5	144-C	292335	75	35	Pole	fair	Bldg. 116	NO	
3	B-5	145	Unknown	500	Unknown	Basement	new	new barracks - basement	unknown	empty
3	B-6	146-A	292322	100	71	Pad	fair/good	behind bldg. 101	3	
3	B-6	146-B	292	100	71	Pad	fair/good	behind bldg. 101	1.3	
3	B-6	146-C	292321	100	71	Pad	fair/good	behind bldg. 101	NO	
2	D-2	147-A	304956	50	56	Pad	good	basement of Bldg. 7	NO	
2	D-2	147-B	294116	50	56	Pad	good	basement of Bldg. 7	NO	
2	D-2	147-C	294115	50	56	Pad	good	basement of Bldg. 7	NO	
2	D-2	147-D	294117	50	56	Pad	good	basement of Bldg. 7	2	
3	C-5	148	43099	500	Unknown	Outside Vault	new	Bldg. 110	unknown	empty
1	B-2	149	282906	10	7.5	Pole	fair	House #CC	NO	
1	C-2	150	Unknown	10	Unknown	Pole	fair	House #BB	NO	Pole is unsafe

TABLE 3

Master List - Transformers

Area	Grid	Trans. No.	Serial No.	KVA	GAL	Mount	1982 Condition	Location	PCB's	Notes
2	D-2	151	Capacitor	100 KVR	Unknown	Pole	good	next to Bldg. 15/16	unknown	Previously Removed
2	D-2	152	253203	10	12	Pole	fair/good	between Bldg. 6 & tennis crt.	1.02	
2	D-3	153	253192	10	12	Pole	fair/good	next to 311B, athletic field	NO	
2	D-3	154	294266	25	20.5	Pole	fair	athletic field behind dugout	NO	
2	D-3	155	288163	25	22.5	Pole	fair/poor	athletic field job corps.	NO	
2	D-3	156	294237	25	22.5	Pole	fair/poor	athletic field job corps	0.1	
2	D-3	157	294231	25	22.5	Pole	fair/poor	athletic field job corps	NO	
2	D-3	158	291760	25	22.5	Pole	fair/poor	athletic field job corps	NO	
2	D-3	159	Unknown	25	22.5	Pole	fair	athletic field job corps	NO	
2	D-3	160	295561	25	22.5	Pole	fair/good	athletic field job corps	0.2	
2	E-2	161-A	L-1094-1H	37.5	35	Pole	fair/good	athletic field job corps	NO	
2	E-2	161-B	L-1094-5H	37.5	35	Pole	fair/good	athletic field	NO	
2	E-2	161-C	L-1094-6	37.5	35	Pole	fair/good	athletic field	0.3	
2	D-2	162	295570	25	22.5	Pole	fair	athletic field	0.1	
2	D-2	163	294234	25	22.5	Pole	fair	athletic field	NO	
2	D-2	164	294242	25	22.5	Pole	poor	athletic field	NO	
2	D-2	165	B653819	5	Unknown	Pole	fair	tennis/BB courts	0.02	
2	D-1	166-A	T9192	150	Dry	Vault	new	basement of Bldg. 1 oil swth	unknown	Condemed Building
2	D-1	166-B	Unknown	Unknown	Unknown	Vault	new	basement of Bldg. 1 oil swth	NO	Condemed Building
2	D-1	166-C	Unknown	Unknown	Unknown	Vault	new	basement of Bldg. 1	NO	Condemed Building
2	D-1	166-D	Unknown	Unknown	Unknown	Vault	new	basement of Bldg.1	NO	Condemed Building
2	E-2	167	Unknown	Unknown	Unknown	Vault	new	basement of Bldg.2	unknown	Condemed Building
2	E-2	168	Unknown	Unknown	Unknown	Vault	new	basement of Bldg. 2	unknown	Condemed Buiding
2	E-2	169	Unknown	Unknown	Dry	Vault	new	basement of Bldg. 4	unknown	Condemed Building
2	E-3	170	5	5	7	Pole	fair/good	job corps behind house F	NO	
2	E-3	171	292452	15	12.5	Pole	fair	job corps behind house F	NO	
2	E-2	172-A	277351	25	22	Pole	fair	Bldg. 753	NO	
2	E-2	172-B	277353	25	22	Pole	fair	Bldg. 753	0.01	
2	E-2	172-C	275746	25	22	Pole	fair	Bldg. 753	NO	
2	E-1	173-A	277359	25	22	Pole	fair	outside frt gate next to #752	1.2	
2	E-1	173-B	288171	25	22	Pole	fair	outside frt gate next to #752	NO	
2	E-1	173-C	288173	25	22	Pole	fair	outside frt gate next to #752	NO	
3	C-5	174-A	724806	333	167	Vault	fair	vault at Bldg. 502	0.02	
3	C-5	174-B	724805	333	167	Vault	fair	vault at Bldg. 502	0.1	
3	C-5	174-C	724804	333	167	Vault	fair	vault at Bldg. 502	NO	
3	C-5	174-D	1812274	150	115	Vault	fair	vault at Bldg. 502	1	
3	C-5	174-E	1812278	150	115	Vault	fair	vault at Bldg. 502	0.2	
3	C-5	175-A	L10944	37.5	37	Pole	fair	Bldg. 502	1	
3	C-5	175-B	L10942	37.5	37	Pole	fair	Bldg. 502	0.1	
3	C-5	175-C	L109443	37.5	37	Pole	fair	Bldg. 502	2	

TABLE 3

Master List - Transformers

Area	Grid	Trans. No.	Serial No.	KVA	GAL	Mount	1982 Condition	Location	PCB's	Notes
4	D-4	176-A	724331	25	Unknown	Pole	fair/good	across from Bldg. 506A	0.1	
4	D-4	176-B	724327	25	Unknown	Pole	fair/good	across from Bldg. 506A	NO	
4	D-4	176-C	724330	25	Unknown	Pole	fair/good	across from Bldg. 506A	NO	
4	D-3	177-A	724328	25	Unknown	Pole	fair/good	3 poles from Bldg. 176	0.2	possibly removed
2	D-3	177-B	724329	25	Unknown	Pole	fair/good	3 poles from Bldg. 176	NO	possibly removed
2	D-3	177-C	724326	25	Unknown	Pole	fair/good	3 poles from Bldg. 176	1	possibly removed
4	D-4	178	285068	15	11.5	Pole	fair	in front of Bldg. 506	NO	
4	D-5	179-A	292350	75	35	Pole	fair	between Bldg. 503/509	NO	
4	D-5	179-B	292359	75	35	Pole	fair	between Bldg. 503/509	0.01	
4	D-5	179-C	292351	75	35	Pole	fair	between Bldg. 503/509	NO	
3	C-5	180-A	273196	7.5	5.5	Pole	fair/poor	job corps barracks	0.01	
3	C-5	180-B	273194	7.5	5.5	Pole	fair/poor	job corps barracks	NO	
3	C-5	180-C	271996	7.5	5.5	Pole	fair/poor	job corps barracks	NO	
6	A-7	181-A	Unknown	50	Unknown	Pole	fair	end of Bldg. 201	NO	
6	A-7	181-B	Unknown	50	Unknown	Pole	fair	end of Bldg. 201	1.2	
6	A-7	181-C	Unknown	50	Unknown	Pole	fair	end of Bldg. 201	NO	
n/a	n/a	182-a	69033738	100 KVAR	Unknown	Pole	good	housing entrance	unknown	Previously Removed
n/a	n/a	182-b	69033736	100 KVAR	Unknown	Pole	good	housing entrance	unknown	Previously Removed
n/a	n/a	182-c	69033737	100 KVAR	Unknown	Pole	good	housing entrance	unknown	Previously Removed
13	G-11	183	1775077	7.5	11.5	Pole	good	housing entrance	NO	
n/a	n/a	184-A	K15902	Unknown	2.6	Pole	good	Valley rd above trailer park	unknown	Previously Removed
n/a	n/a	184-B	K15919	Unknown	2.6	Pole	leaking	above trailer park	unknown	Previously Removed
n/a	n/a	184-C	K15907	Unknown	2.6	Pole	leaking	above trailer park	unknown	Previously Removed
n/a	n/a	184-D	K15934	Unknown	2.6	Pole	good	above trailer park	unknown	Previously Removed
n/a	n/a	184-E	K15597	Unknown	2.6	Pole	good	above trailer park	unknown	Previously Removed
n/a	n/a	184-F	K15922	Unknown	2.6	Pole	good	above trailer park	unknown	Previously Removed
9	B-10	185-A	292347	75	35	Pole	fair	front of Bldg. 634A	NO	
9	B-10	185-B	292346	75	35	Pole	fair	front of Bldg. 634A	NO	
9	B-10	185-C	292343	75	35	Pole	fair	front of Bldg. 634A	NO	
6	B-9	186	292100	7.5	9	Platform	fair	Bldg. 639	0.25	
6	A-9	187	252310	10	10	Pole	fair	Bldg. 648	NO	
6	A-9	188	244025	25	Unknown	Pole	fair	Stable area	NO	
6	B-9	189	Unknown	Unknown	Unknown	Pole	poor	between 636/641	unknown	empty; off pole
6	B-8	190-A	8949800	50	29	Pole	fair	Bldg. 202/202A	0.2	
6	B-8	190-B	949805	50	29	Pole	fair	Bldg. 202/202A	NO	
6	B-8	190-C	949803	50	29	Pole	poor	Bldg. 202/202A	NO	
6	B-7	191-A	285053	15	12.5	Pole	fair	on rd btwn Bldgs. 223/221	NO	
6	B-7	191-B	284442	15	12.5	Pole	fair	on rd btwn Bldgs. 223/221	NO	
6	B-7	191-C	284441	15	12.5	Pole	fair	on rd btwn Bldgs. 223/221	NO	
6	B-7	192-A	254281	100	56	Vault	fair	in vault, 201 Southside Bldg.	NO	

TABLE 3

Master List - Transformers

Area	Grid	Trans. No.	Serial No.	KVA	GAL	Mount	1982 Condition	Location	PCB's	Notes
6	B-7	192-B	254282	100	56	Vault	top off	Bldg. 201	NO	
6	B-7	192-C	254280	100	56	Vault	top off	Bldg. 201	2	
6	B-7	193	R30646	167	55	Pole	good	Northside of Bldg. 201	NO	
6	A-7	194	R30642	167	55	Pole	good	Northside of Bldg. 201	2	
6	B-7	195-A	277358	25	22	Pole	fair	between Bldgs. 230/228	NO	
6	B-7	195-B	264014	25	22	Pole	fair	between Bldgs. 230/228	0.1	
6	B-7	195-C	275745	25	22	Pole	fair	between Bldgs. 230/228	unknown	empty
6	B-7	196-A	294135	15	12.5	Pole	fair	between Bldgs. 230/228	3	
6	B-7	196-B	287359	15	12.5	Pole	fair	between Bldgs. 230/228	0.4	
6	B-7	196-C	294128	15	12.5	Pole	fair	between Bldgs. 230/228	NO	
9	B-10	197-A	2412684	100	71	Pole	poor	behind Bldg. 634	unknown	empty
9	B-10	197-B	2412685	100	71	Pole	poor	behind Bldg. 634	unknown	empty
9	B-10	197-C	2412683	100	71	Pole	poor	behind Bldg. 634	unknown	empty

FIGURES

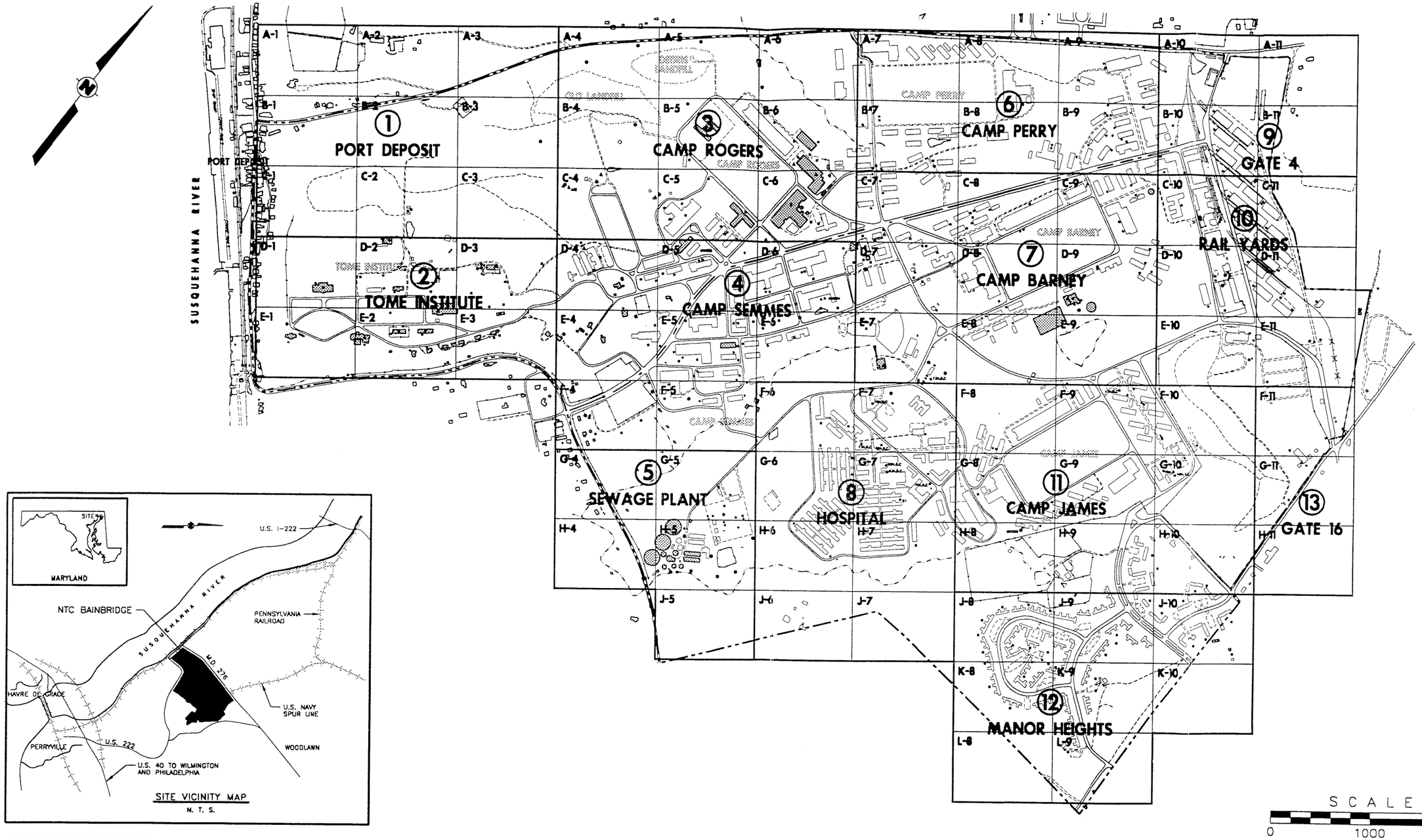

General Notes and Legend

- MONITORING WELLS
- FORMER UST LOCATION
- TRANSFORMER LOCATION
- DEBRIS LOCATION
- WORK LIMITS
- STREAM
- TRAIL
- BUILDING
- BUILDING (REMOVED)

No.	Revision/Issue	Date

OHM Remediation Services Corp.
OHM Project No. 19568

Drawn By:	Checked By:	Approved By:
M.Warnick	L. Stearns	L. Stearns
Date: 1/21/96	Scale: AS SHOWN	Drawing No. 19568-B1

FIGURE 2
WORK AREAS
SITE CLEANUP COST PROPOSAL
NAVAL TRAINING CENTER – BAINBRIDGE
PORT DEPOSIT, MARYLAND
PREPARED FOR
DEPARTMENT OF THE NAVY
EFA – CHESAPEAKE
WASHINGTON, D.C.

APPENDIX A
FORMS

CONTRACTOR PRODUCTION REPORT

(ATTACH ADDITIONAL SHEETS IF NECESSARY)

CONTRACT NO.	TITLE AND LOCATION	DATE / REPORT NO.
CONTRACTOR		SUPERINTENDENT
WEATHER	PM WEATHER	MAX TEMP °F MIN TEMP °F

WORK PERFORMED TODAY

WORK LOCATION AND DESCRIPTION	EMPLOYER	NUMBER	TRACE	HRS

JOB SAFETY

WAS A JOB SAFETY MEETING HELD THIS DATE? ☐ YES ☐ NO
(If YES, attach copy of the meeting minutes)
WERE THERE ANY LOST TIME ACCIDENTS THIS DATE? ☐ YES ☐ NO
(If YES, attach copy of completed OSHA report)
WAS TRENCHING/SCAFFOLD/HV ELECTRICAL/HIGH WORK DONE? ☐ YES ☐ NO
(If YES, attachment statement or checklist showing inspection performed)
WAS HAZARDOUS MATERIAL/WASTE RELEASED INTO THE ENVIRONMENT? ☐ YES ☐ NO
(If YES, attach description of incident and proposed action)

TOTAL WORK HOURS ON JOB SITE THIS DATE	
CUMULATIVE TOTAL OF WORK HOURS FROM PREVIOUS REPORT	
TOTAL WORK HOURS FROM START OF CONSTRUCTION	

LIST SAFETY ACTIONS TAKEN TODAY/SAFETY INSPECTIONS CONDUCTED

SAFETY REQUIREMENTS HAVE BEEN MET

EQUIPMENT MATERIAL RECEIVED TODAY TO BE INCORPORATED IN JOB

CONSTRUCTION AND PLANT EQUIPMENT ON JOB SITE TODAY INCLUDE NUMBER OF HOURS USED TODAY

REMARKS

CONTRACTOR/SUPERINTENDENT DATE

CONTRACTOR QUALITY CONTROL REPORT

(ATTACH ADDITIONAL SHEETS IF NECESSARY)

DATE

PHASE	Y - YES, N - NO, SEE REMARKS, BLANK - NOT APPLICABLE		IDENTIFY DEFINABLE FEATURE OF WORK LOCATION AND LIST PERSONNEL PRESENT
PREPARATORY	THE PLANS AND SPECS HAVE BEEN REVIEWED		
	THE SUBMITTALS HAVE BEEN APPROVED		
	MATERIALS COMPLY WITH APPROVED SUBMITTALS		
	MATERIALS ARE STORED PROPERLY		
	PRELIMINARY WORK WAS DONE CORRECTLY		
	TESTING PLAN HAS BEEN REVIEWED		
	WORK METHOD AND SCHEDULE DISCUSSED		

INITIAL	PRELIMINARY WORK WAS DONE CORRECTLY		TESTING PERFORMED & WHO PERFORMED TEST
	SAMPLE HAS BEEN PREPARED/APPROVED		
	WORKMANSHIP IS SATISFACTORY		
	TEST RESULTS ARE ACCEPTABLE		
	WORK IS IN COMPLIANCE WITH THE CONTRACT		

FOLLOW-UP	WORK COMPLIES WITH CONTRACT AS APPROVED IN INITIAL PHASE		TESTING PERFORMED & WHO PERFORMED TEST

REWORK ITEMS IDENTIFIED (NOT CORRECTED BY CLOSE OF BUSINESS)	REWORK ITEMS CORRECTED TODAY (FROM REWORK ITEMS LIST)

REMARKS

On behalf of the contractor, I certify that this report is complete and equipment and material used and work performed during this reporting period is in compliance with the contract drawings and specifications to the best of my knowledge except as noted in this report.

AUTHORIZED QC MANAGER AT SITE DATE

GOVERNMENT QUALITY ASSURANCE REPORT

DATE

QUALITY ASSURANCE REPRESENTATIVE'S REMARKS AND/OR EXCEPTIONS TO THE REPORT

AUTHORIZED QC MANAGER AT SITE DATE

CONTRACTOR QUALITY CONTROL REPORT CONTINUATION SHEET

(ATTACH ADDITIONAL SHEETS IF NECESSARY)

DATE	
CONTRACT NO.	REPORT NO.

PHASE	Y - YES, N - NO, SEE REMARKS, BLANK - NOT APPLICABLE		IDENTIFY DEFINABLE FEATURE OF WORK LOCATION AND LIST PERSONNEL PRESENT
PREPARATORY	THE PLANS AND SPECS HAVE BEEN REVIEWED		
	THE SUBMITTALS HAVE BEEN APPROVED		
	MATERIALS COMPLY WITH APPROVED SUBMITTALS		
	MATERIALS ARE STORED PROPERLY		
	PRELIMINARY WORK WAS DONE CORRECTLY		
	TESTING PLAN HAS BEEN REVIEWED		
	WORK METHOD AND SCHEDULE DISCUSSED		

PHASE	Y - YES, N - NO, SEE REMARKS, BLANK - NOT APPLICABLE		IDENTIFY DEFINABLE FEATURE OF WORK LOCATION AND LIST PERSONNEL PRESENT	TESTING PERFORMED & WHO PERFORMED TEST
INITIAL	PRELIMINARY WORK WAS DONE CORRECTLY			
	SAMPLE HAS BEEN PREPARED/APPROVED			
	WORKMANSHIP IS SATISFACTORY			
	TEST RESULTS ARE ACCEPTABLE			
	WORK IS IN COMPLIANCE WITH THE CONTRACT			

CONTRACTOR QUALITY CONTROL REPORT CONTINUATION SHEET

(ATTACH ADDITIONAL SHEETS IF NECESSARY)

CONTRACT NO.	DATE
	REPORT NO.

PHASE	Y - YES, N - NO, SEE REMARKS, BLANK - NOT APPLICABLE	IDENTIFY DEFINABLE FEATURE OF WORK LOCATION AND LIST PERSONNEL PRESENT	TESTING PERFORMED & WHO PERFORMED TEST
	WORK COUPLES WITH CONTRACT AS APPROVED IN INITIAL PHASE		
FOLLOW-UP			

SEARCH REPORT

GRID NUMBER_____

1	Are either Waste, Debris, or Transformers present?		YES		NO
2	If "NO", then sign form and stop. If "YES", then continue with report.				
3	Number of Transformers by Location:		Inside		Outside
4	Number of Transformers by Mounting:		On Ground		On Pole
5	Is visible staining present ?		Soil		Other
6	Additional field notes on Transformers:				
7					
8	Number of Waste Containers/Debris by Location:		Inside		Outside
9	Number of Waste Containers/Debris by Type:		Cylinders		Drums
10			Small Cans		Debris
11	Is visible staining present ?		In Soil?		Other?
12	Additional field notes on Waste Containers and Debris:				
13					
14	Is a STRUCTURAL inspection needed?		YES		NO
15	Is a ELECTRICAL inspection needed?		YES		NO
16	Additional field notes on Structural/Electrial issues:				
17					
18	Are **SPECIAL** safety precautions needed?		YES		NO
19	Additional field notes on Health and Safety issues:				
20					
21	Where photographs or video taken?		YES		NO
22	Identify photographs and video:			ROLL Number:	
23					

	SIGNATURE	NAME	NUMBER	TITLE
24				
25				
26				
27				

SEARCH DATE:_____

NTC - Bainbridge, MO
OHM Job #19568

Safety Inspection Report

GRID NO:_____
BUILDING NO:_____

1	Indicate type of waste present:		Transformers		Containers
2			Drums		Debris
3	Indicate structural condition of following:				
4	Ingress Point		Safe		Unsafe
5	Egress Point		Safe		Unsafe
6	Stairs		Safe		Unsafe
7	Floor		Safe		Unsafe
8	Ceiling or Roof		Safe		Unsafe
9	Walls		Safe		Unsafe
10	Mechanical		Safe		Unsafe
11	Electrical		Safe		Unsafe
12	Other Structural Features		Safe		Unsafe
13	Additional field notes on Structural inspection:				
14					
15	Is this an OSHA confined space entry?		Yes		No
16	Is artificial lighting needed?		Yes		No
17	Is breathing air or PPE needed?		Yes		No
	Is a **NEW** JSA needed?		Yes		No
18	Additional field notes on Health and Safety inspection:				
19					
20	Is work item de-energized?		Yes		No
21	Is work item electrically connected?		Yes		No
22	Is a Lockout/Tagout needed?		Yes		No
23	Additional field notes on Electrical inspection:				
24					
25	**LIST ANY REQUIRED ACTIONS TO MAKE WORK AREA SAFE:**				
26					
27					
28					
29					
30					
31					
32					
33					

	SIGNATURE	NAME	NUMBER	TITLE
34				
35				HASO
36				Str. Eng.
37				Elec. Tech.

Contract No. N62470-93-D-3032 Delivery Order #137 INSPECTION DATE:

LAB COPY

OHM Corporation

CHAIN-OF-CUSTODY RECORD

Form 0019
Field Technical Services
Rev. 08/89

136200

O.H. MATERIALS CORP. • P.O. BOX 551 • FINDLAY, OH 45839-0551 • 419-423-3526

PROJECT NAME	PROJECT LOCATION
PROJ NO. / PROJECT CONTACT	PROJECT TELEPHONE NO.
CLIENT'S REPRESENTATIVE	PROJECT MANAGER/SUPERVISOR

ITEM NO.	SAMPLE NUMBER	DATE	TIME	COMP	GRAB	SAMPLE DESCRIPTION (INCLLDE MATRIX AND POINT OF SAMPLE	NUMBER OF CONTAINERS	ANALYSIS DESIRED (INDICATE SEPARATE CONTAINERS)								REMARKS
1																
2																
3																
4																
5																
6																
7																
8																
9																
10																

TRANSFER NUMBER	ITEM NUMBER	TRANSFERS RELINQUISHED BY	TRANSFERS ACCEPTED BY	DATE	TIME	REMARKS
1						
2						
3						
4						SAMPLER'S SIGNATURE

Figure 6.1

FIGURE 5.1

OHM Remediation Services Corp.	TRANSFORMER/CAPACITOR INSPECTION FORM	Item No. _____

Project Location NTC - Bainbridge, MD **Project Number** 19568 DO#137

Project Contact Larry STEARNS **Phone** 800-284-6462

~~Logger~~ Inspector _____ **Sampler** _____

Weather _____ **Date** _____ **Time** _____

Location: _____ GRID #: _____

Inside ___ Outside ___

Size: Height _____ Length _____ Width _____

Fluid Capacity _____ Actual Volume _____

Tag Information:

Serial Number _____ Fluid Name _____

KVA/Volts _____

Other _____

_____

Diagram of Unit

Sampled By: _____ **Witness:** _____

FIGURE 5.2

OHM Remediation Services Corp.	GAS CYLINDER INSPECTION FORM	Cylinder No. _____

Project Location NTC - Bainbridge, MD **Project Number** 19568 DO #137

Project Contact LARRY STEARNS **Phone** 810 - 284 - 6462

Inspector _____

Weather _____ **Date** _____ **Time** _____

Cylinder Location: _____ GRID #: _____

Cylinder Description: Size _____ Length _____ Diameter _____

Condition: Good ____ Fair ____ Poor ____ Ruptured ____ Safety ____

Material of Construction: Steel ____ Stainless Steel ____ Aluminum ____

Other (Description): _____

Valve Data: Male ____ Female ____ **Threads:** Left Hand ____ Right Hand ____

Fittings: None ____ Regulator ____ **Gauge Readings:** High ____ Low ____

Other: _____

Markings:

Product Name: _____ Manufacturer: _____

Placards: _____ Pressure Limit (DOT or ASME): _____

Product No.: _____ Serial No.: _____ Color: _____

Number of Cylinders: ____

PID Reading: _____ **LEL Reading:** _____ **Oxygen Reading:** _____

Cylinder Diagram

OHM Remediation Services Corp.

Routing: Contr. Adm.
Proj. Mgr.
Site Supv.
Proj. Acct.
CSE
QC
Job File
John Franz-Prog.
COTR- J. Haste

Project Name: _____
Delivery Order: _____
Contract Purchase Order N62470-93-D-3032
OHM Project No. _____

WORK DIRECTIVE (WD)

Date of Request: _____ WBS Code: _____ [ ] new code WD No: _____
WBS Description: _____

TITLE OF WORK DIRECTIVE:

DESCRIPTION OF WORK: _____

WORK DIRECTIVE TYPE

[ ] Technical direction

[ ] Scope Growth (Mod to follow)
- [ ] Quanity Increase
- [ ] New Scope Item
- [ ] Other

[ ] Scope Reduction (Mod to follow)
- [ ] Quanity Decrease
- [ ] Scope Reduction
- [ ] Other

Initiated By:
- [ ] Navy
- [ ] OHM
- [ ] Regulatory Agency
- [ ] Other

Explanation: _____

Attachments: _____

COST IMPACT Rough order of Magnitude (ROM) Estimated value of item: _____

NOTE: This estimate includes direct costs, fringes and mark-ups. No fee.

SCHEDULE IMPACT Estimated Duration of Item _____ Work Days
Estimated Schedule Impact _____ Calender days

Is approval date critical [ ] yes [ ] no
If yes, indicate date: _____

Reason for critical approval date: _____

OHM Representative: _____ Date: _____
On-Site Engineer: _____ Date: _____
OHM Project Manager: _____ Date: _____

APPROVALS Note: Failure to approve by the critical date may result in additional cost and/or schedule impact.

[ ] Approved [ ] Modified (see attached) [ ] Rejected

RPM: _____ Date: _____
ROICC/NTR: _____ Date: _____

OHM Remediation Services Corp.

Routing: Contr. Adm.
Proj. Mgr
Site Supv.
Proj. Acct.
CSE
QC

Job File

Project Name: _____ _____
Delivery Order: _____ _____
Contract Purchase Order N62470-93-D-3032 _____
OHM Project Order _____

OVERTIME AUTHORIZATION (OTA)

Date of Request: _____ WBS Code: _____ OTA No: _____

Reason for request
- [ ] Emergency
- [ ] Equipment Maintenance
- [ ] Keep critical activities on schedule
- [ ] Accelerate schedule
- [ ] Other

Explanation: _____

Initiated by:
- [ ] Navy
- [ ] OHM
- [ ] Other

Estimated period of overtime work _____ Start Date: _____ End Date: _____

ROM Cost Estimate _____

Requested By: _____ Date: _____
OHM Project Manager

APPROVALS

[ ] Approved [ ] Modified [ ] Rejected

Modification (if any)

_____

_____

_____

RPM: _____ Date: _____

ROICC/NTR: _____ Date: _____

OHM Remediation Services Corp.

Routing: Contr. Adm.
Site Supv.
Proj. Acct.
CSE
QC
Job File

Project Name: _____ _____
Delivery Order: _____ _____
Contract Purchase Order N62470-93-D-3032 _____
OHM Project Order _____

REQUEST FOR INFORMATION (RFI)

Date of Request: _____ Suspense Date: _____ VR No: _____

SITUATION/CONDITION REQUIRING CLARIFICATION

Dwg Ref: _____ Spec Sec: _____
Site Location _____

DESCRIPTION:

DATE RECEIVED BY:
Certifying Engineer: _____ Tech. Rep: _____ ROICC: _____

RESPONSE:

Note: This is a clarification and does not create additional work that could be considered as a change to the contract drawings and /or specification.

RPM: _____ Date: _____

ROICC/NTR: _____ Date: _____

OHM Remediation Services Corp.

Routing: Contr. Adm.
Site Supv.
Proj. Acct.
CSE
QC
Job File

Project Name: _____ _____
Delivery Order: _____ _____
Contract Purchase Order N62470-93-D-3032 _____
OHM Project Order _____

VARIANCE REQUEST (VR)

Date of Request: _____ Suspense Date: _____ VR No: _____

PROPOSED VARIANCE Dwg Ref.: _____ Spec Sec: _____
Site Location _____

DESCRIPTION:

Note: Approval of this variance will not result in an increase in cost or in time of performance to this contract.

Initiated By [ ] Navy
[ ] OHM
[ ] Regulatory Agency
[ ] Other

On-Site Engineer: _____ Date: _____
OHM Project Engineer _____ Date: _____
Site Quality Control Manager: _____ Date: _____
OHM Project Manager: _____ Date: _____

APPROVALS [ ] Approved [ ] Modified (see below) [ ] Rejected

Note: This is a clarification and does not create additional work that could be considered as a change to the cost of the project.

RPM: _____ _____ Date: _____
ROICC/NTR: Date:

VARIANCE REQUEST (VR)

I Purpose: A variance request (VR) is a traceable document that confirms approval or rejection of a proposal to modify a contractual requirement that will not affect the Delivery Order price and/or schedule.

The variance must be minor in nature, create no adverse impact on the design or function of the affected area, and not require a formal contract modification for implementation.

II Information: VR's contain the following information:

A. References contract documents: scope of work, drawings specification, etc.
B. States the proposed variation or deviation:
   1. Use of different material
   2. Employ different construction method
   3. Relaxation of contract requirements

C. Explains reason for request, such as:
   1. Specified material is not available
      a. Unreasonable delivery time
      b. Item is discontinued
      c. Improved or updated model available
   2. A less expensive but comparable material can be used
   3. Construction application, for example, soil compaction, not practical to field conditions, for example, material not capable of meeting specified density requirements.

III. Flow of Responsibilities:

A. Immediately upon discovery of the need for a variance, the VR form, containing the complete and correct information (as outlined above) is submitted to the technical lead person on site.
B. A technical review is performed on the variance request and identified as; approved; modified; rejected.
C. The approved or modified VR is forwarded to the site QC manager (if applicable) then the project manager. Post review, the VR is submitted to the ROICC who approves and acknowledges initiation. A copy is maintained regardless of the review status.

OHM Remediation Services Corp.

Routing: Contr. Adm.
Proj. Mgr.
Site Supv.
Proj. Acct.
CSE
QC
Job File

Project Name: _____
Delivery Order: _____
Contract Purchase Order N62470-93-D-3032
OHM Project No. _____

VARIANCE REQUEST (VR)

Date of Request: _____ Suspense Date: _____ VR No: _____

PROPOSED VARIANCE

Dwg Ref: _____ Spec Sec: _____
Site Location: _____

DESCRIPTION:

_____

Note: Approval of this variance will not result in an increase in cost or in time of performance to this contract.

Initiated By [ ] Navy
[ ] OHM
[ ] Regulatory Agency
[ ] Other

On-Site Engineer: _____ Date: _____

OHM Project Engineer: _____ Date: _____

Site Quality Control Manager: _____ Date: _____

OHM Project Manager: _____ Date: _____

APPROVALS [ ] Approved [ ] Modified (see below) [ ] Rejected

_____

Note: This is a clarification and does not create additional work that could be considered as a change to the cost of the project.

RPM: _____ Date: _____

ROICC/NTR: _____ Date: _____

CAD File: 15436-49

Plot Scale: 1 = 1 DL 3/18/96

APPENDIX B
SHOP DRAWINGS

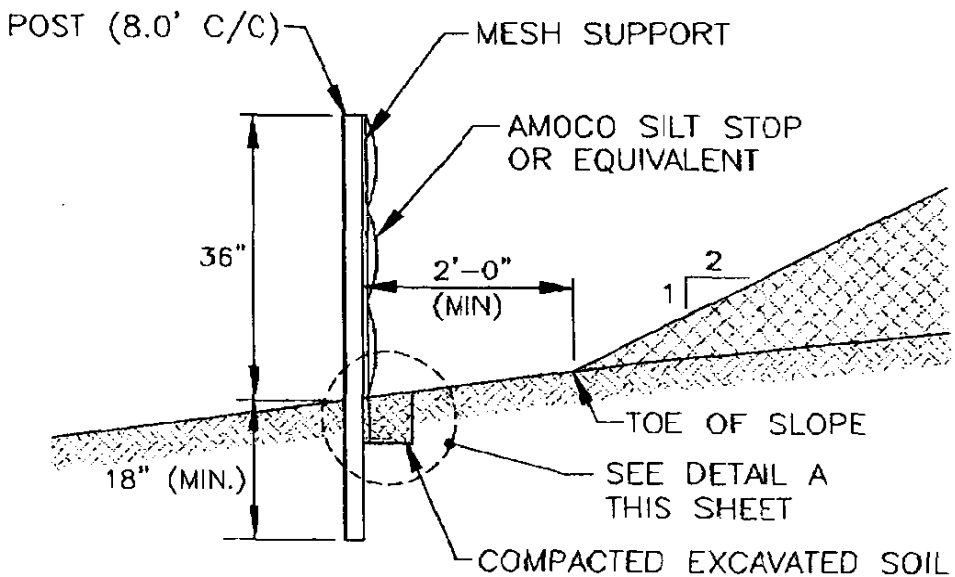

ELEVATION

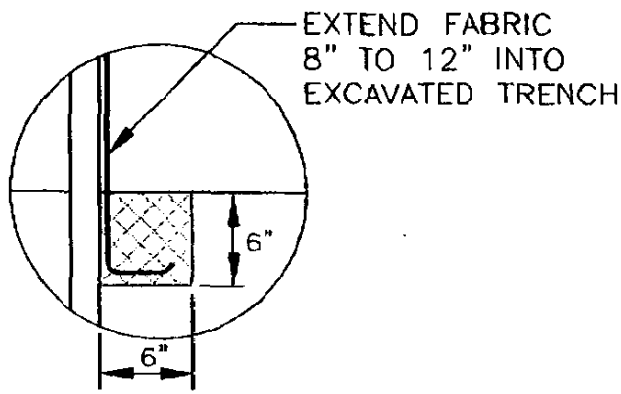

DETAIL A

SILT FENCE DETAIL

N. T. S.

Plot . . 1 = 1 revision 0 CAD 19568-A2

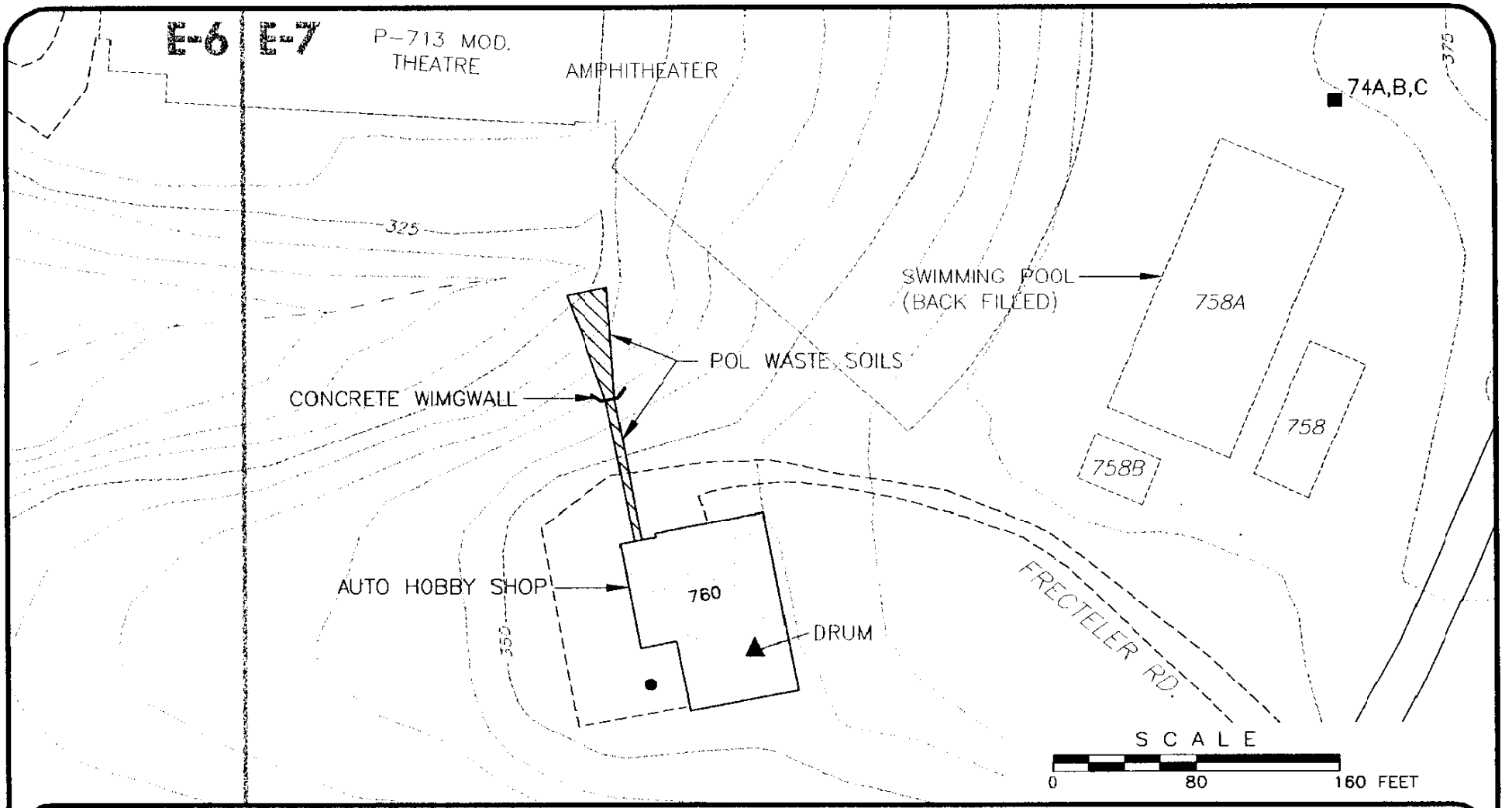

Legend

- PCL WASTE SOILS
- 74A,B,C ■ TRANSFORMER LOCATION
- DRUM ▲ DEBRIS LOCATION
- ● FORMER UST LOCATION
- FORMER UST LOCATION

OHM Remediation Services Corp.

OHM Project No. ??

Drawn By:	Checked By:	Approved By:
M.WARNICK	C. BOONE	L. STEARNS
Date: 2/17/97	Scale: AS SHOWN	Drawing No. 19568-A2

FIGURE 2

PLAN VIEW BUILDING 760 EXCAVATION

SITE CLEANUP COST PROPOSAL
NAVAL TRAINING CENTER – BAINBRIDGE
PORT DEPOSIT, MARYLAND

PREPARED FOR

DEPARTMENT OF THE NAVY
EFA – CHESAPEAKE
WASHINGTON, D.C.

SEARCH AREA 2
TOME INSTITUTE

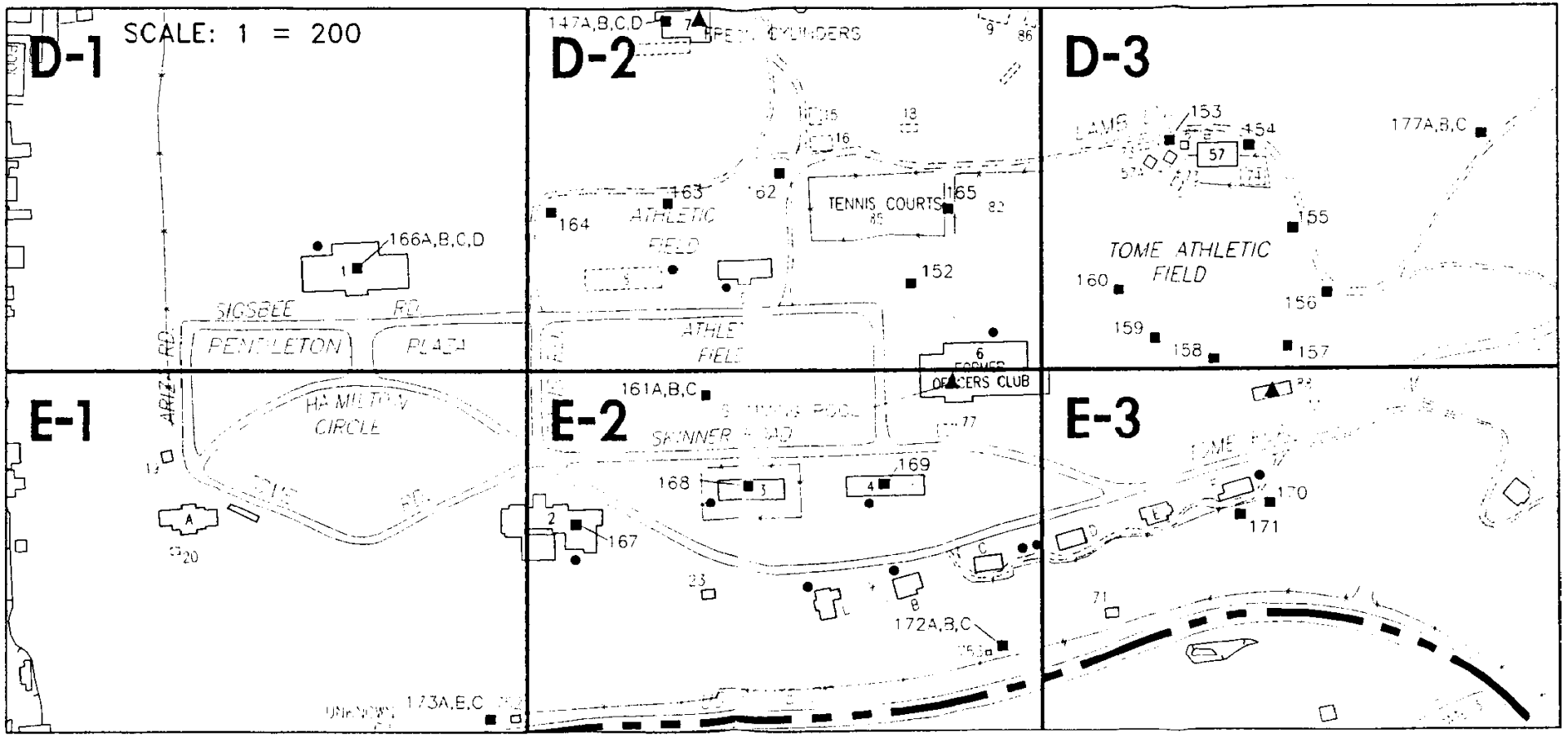

D-1
SCALE: 1 = 200
166A,B,C,D
SIGSBEE RD.
PENDLETON
PLAZA
ARIZ RD.
HAMILTON CIRCLE
D-2
147A,B,C,D
TENNIS COURTS
ATHLETIC FIELD
164
163
162
165
152
6
OFFICERS CLUB
D-3
153
154
57
177A,B,C
155
TOME ATHLETIC FIELD
160
156
159
158
157
E-1
A
20
173A,B,C
E-2
161A,B,C
SKINNER ROAD
168
169
167
172A,B,C
E-3
170
171

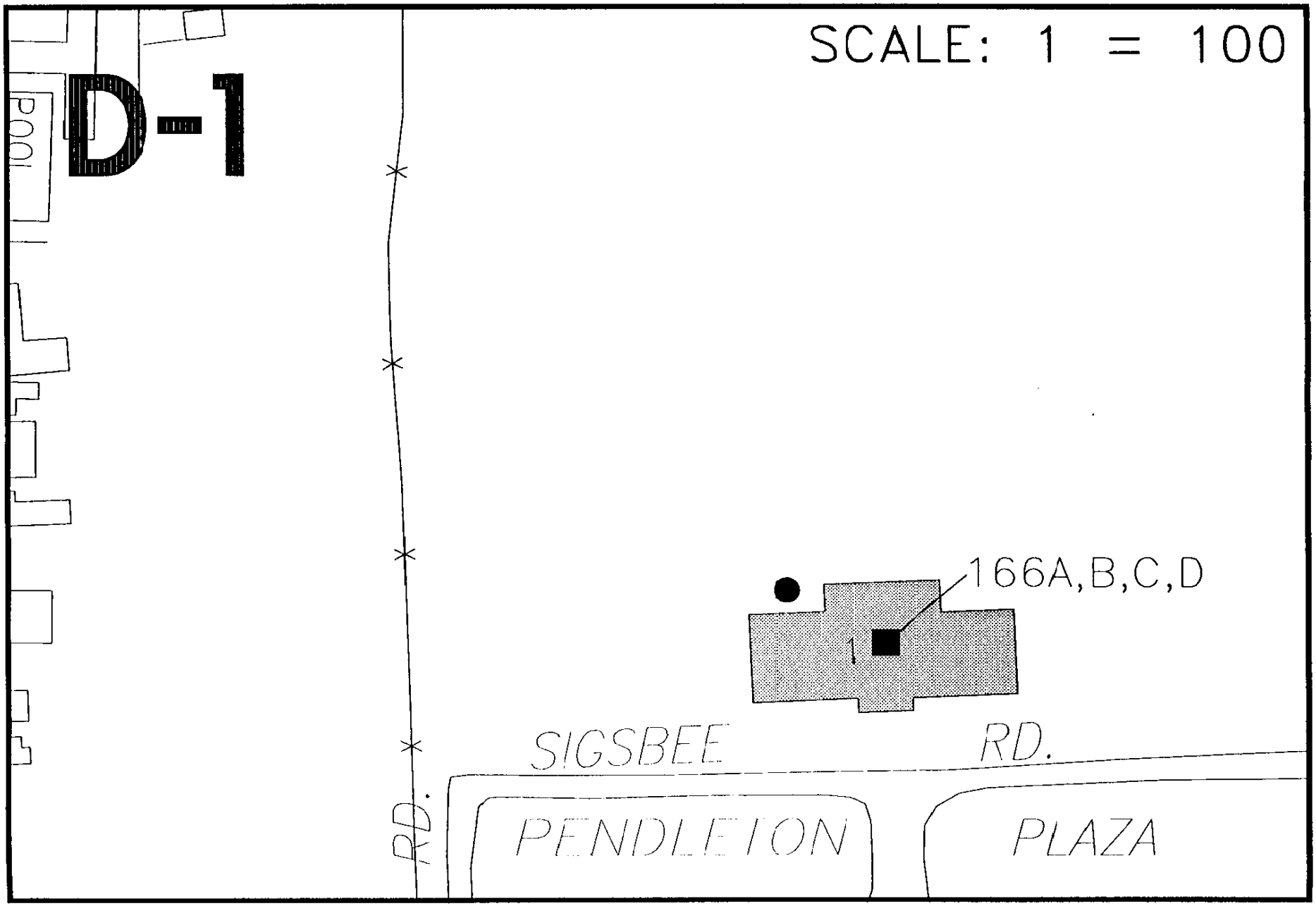
D-1
SCALE: 1 = 100
POOL
166A,B,C,D
SIGSBEE
RD.
RD.
PENDLETON
PLAZA

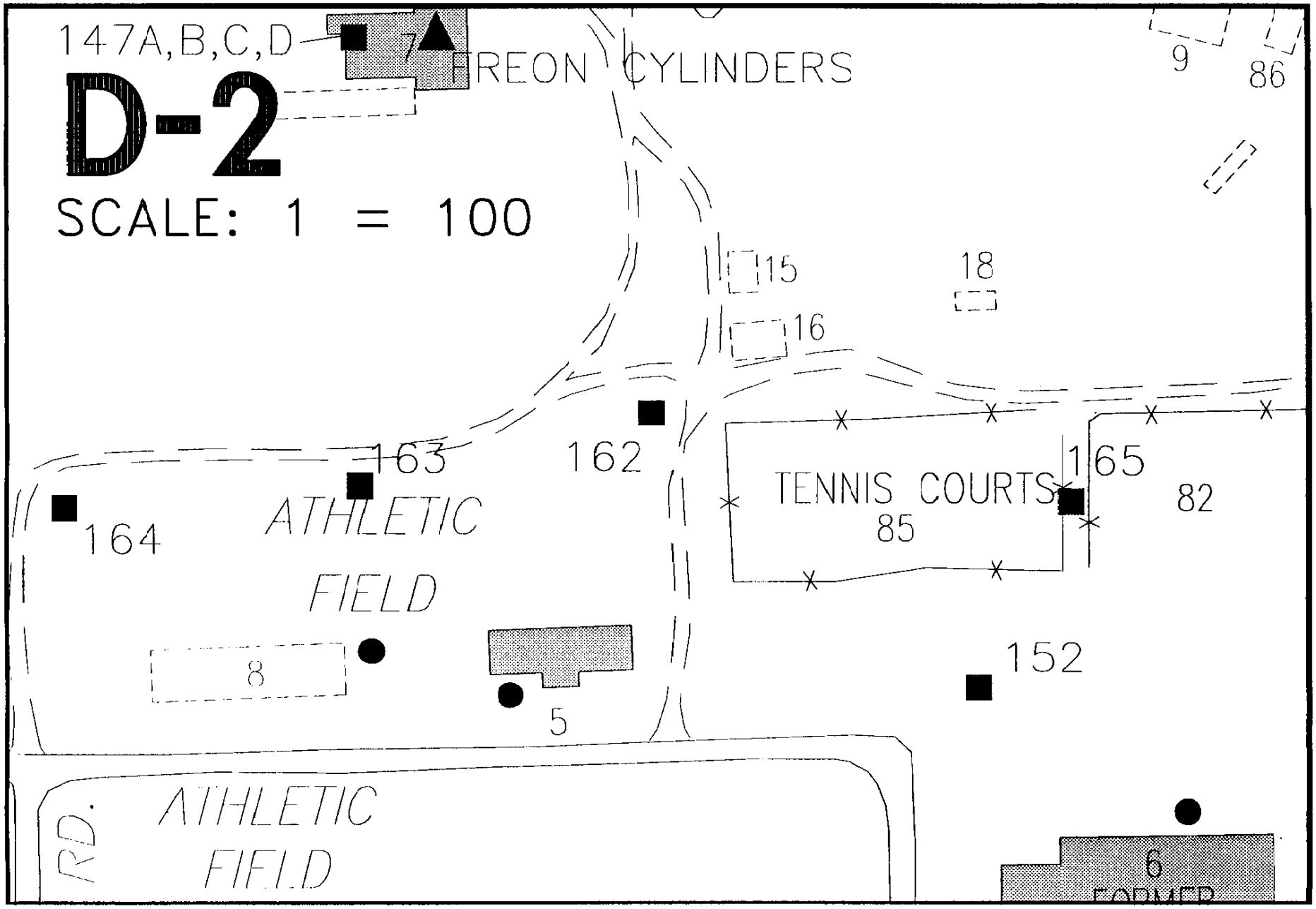
D-2
SCALE: 1 = 100
147A,B,C,D
7
FREON CYLINDERS
9
86
15
18
16
163
162
165
TENNIS COURTS
85
82
164
ATHLETIC
FIELD
8
5
152
ATHLETIC
FIELD
RD.
6

D-3

SCALE: 1 = 100

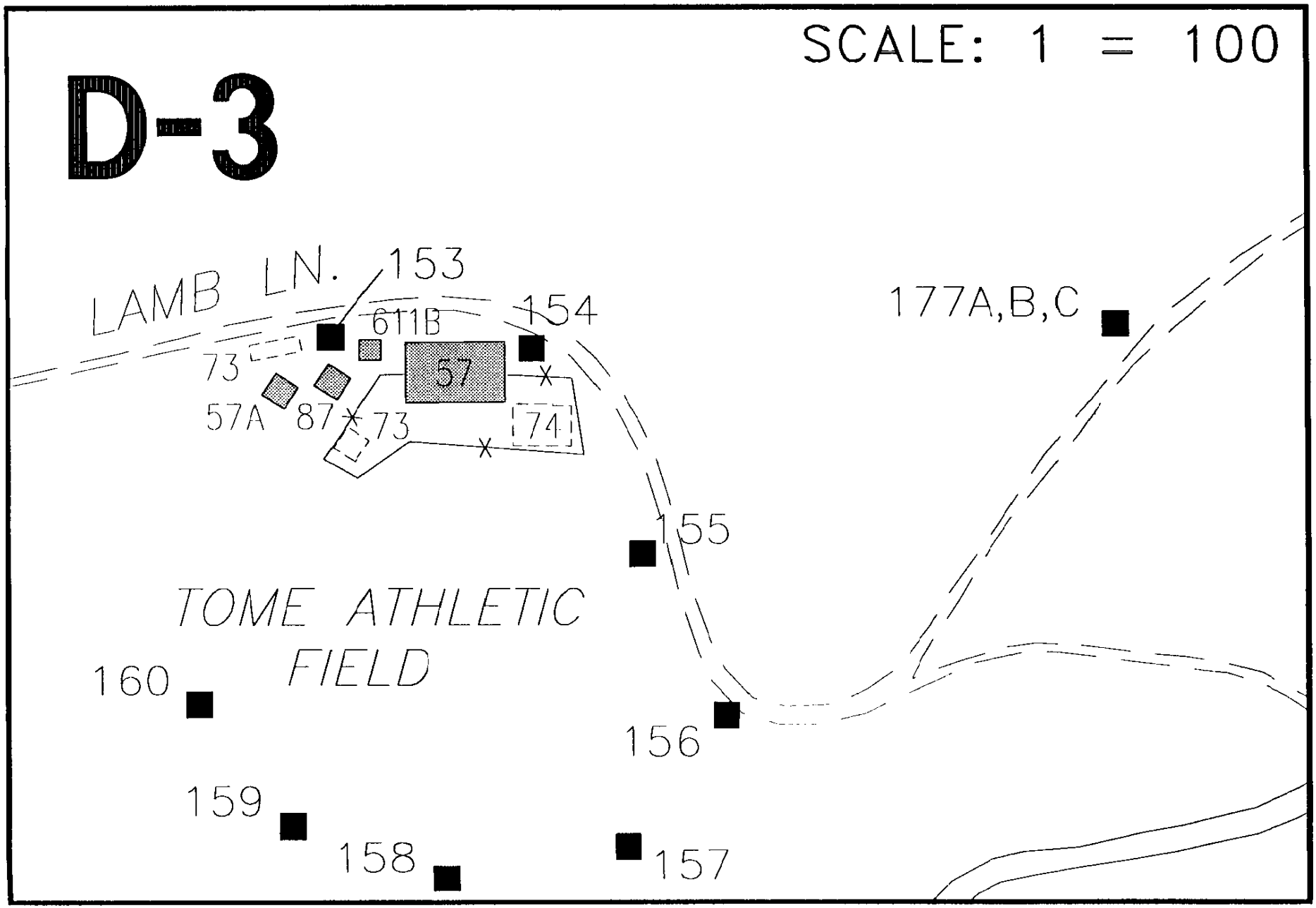

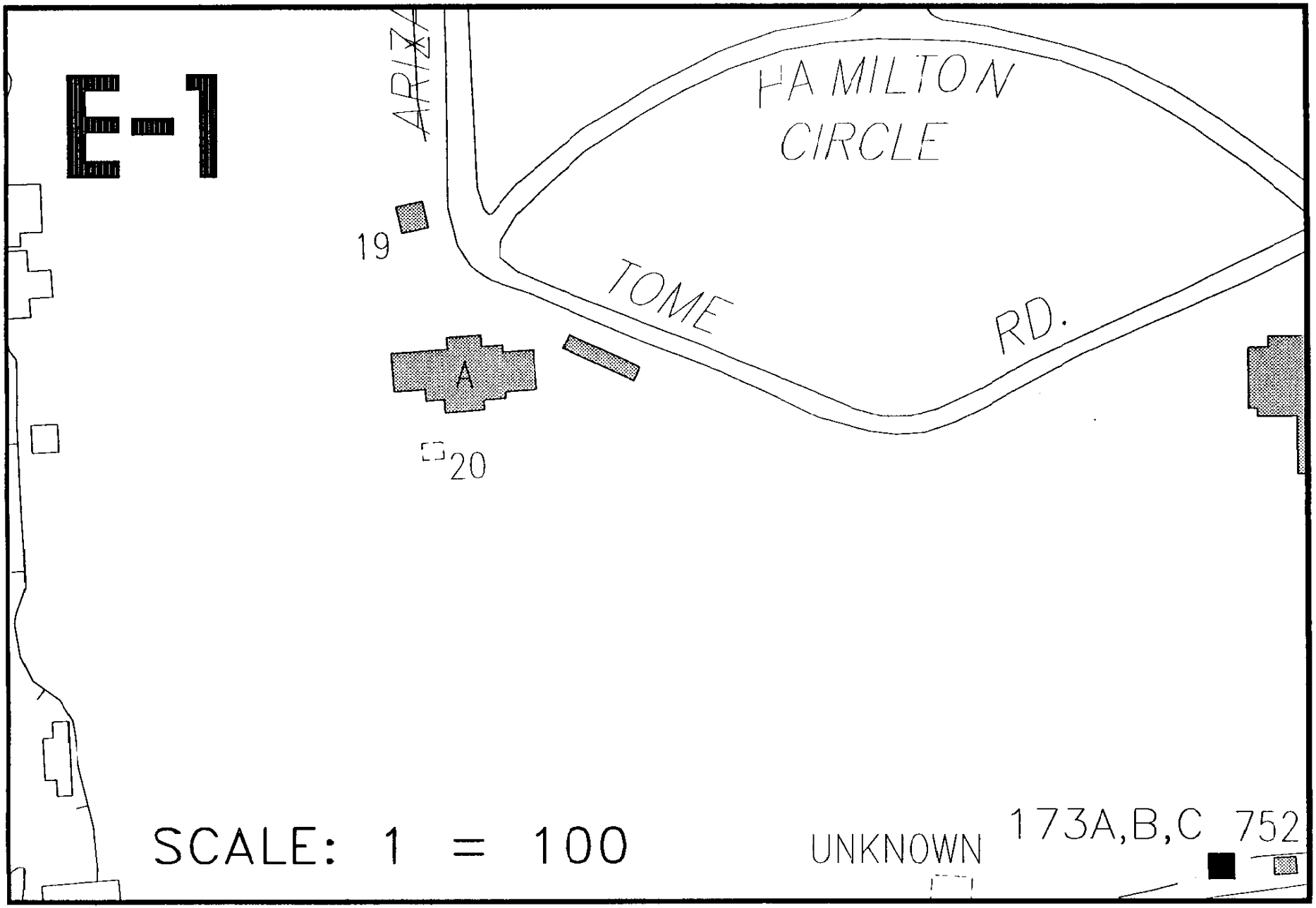
E-1
ARIZ
HAMILTON
CIRCLE
19
TOME
RD.
A
20
SCALE: 1 = 100
UNKNOWN
173A,B,C
752

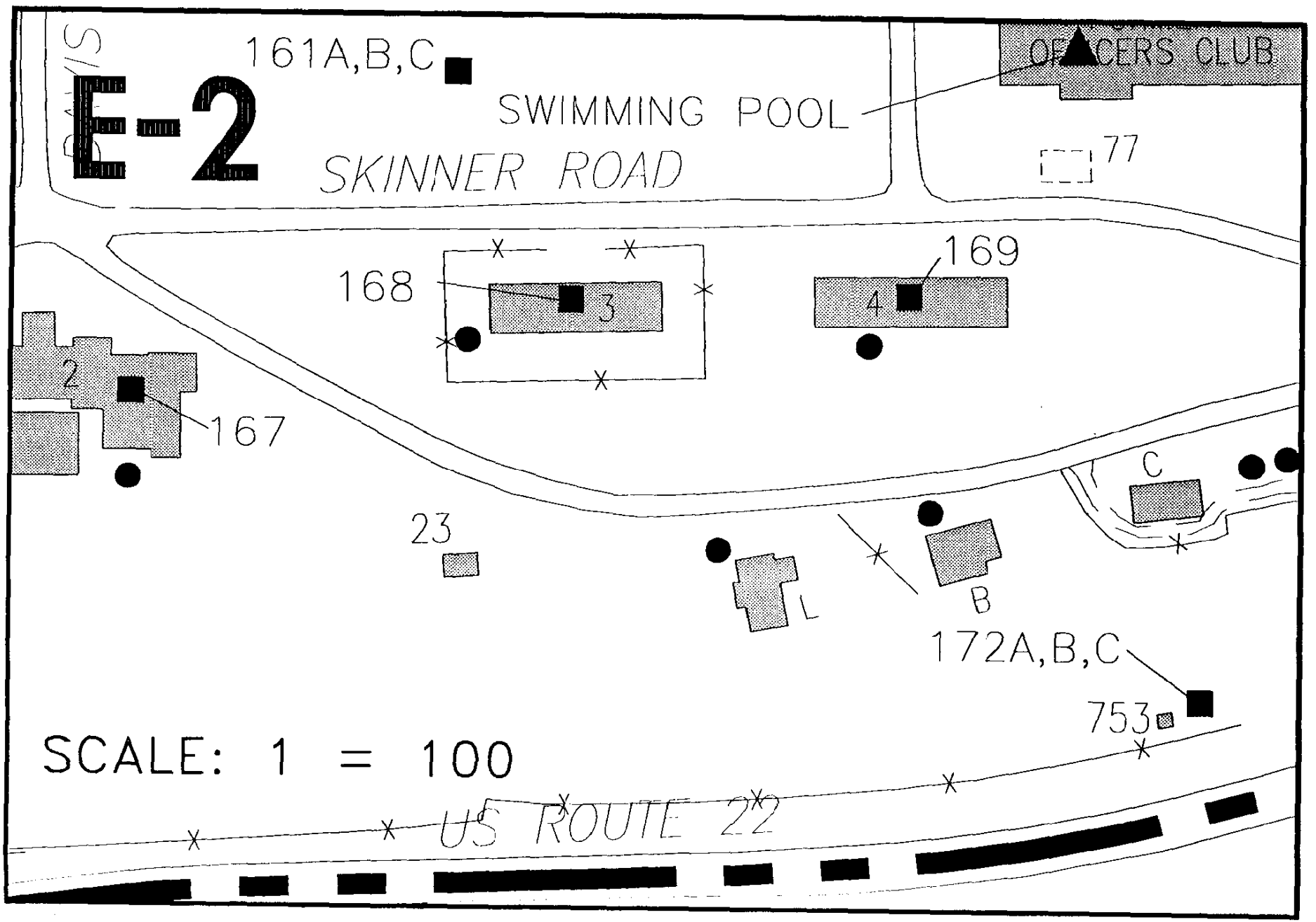
E-2
161A,B,C
SWIMMING POOL
SKINNER ROAD
OFFICERS CLUB
77
168
3
169
4
2
167
23
L
B
C
172A,B,C
753
SCALE: 1 = 100
US ROUTE 22

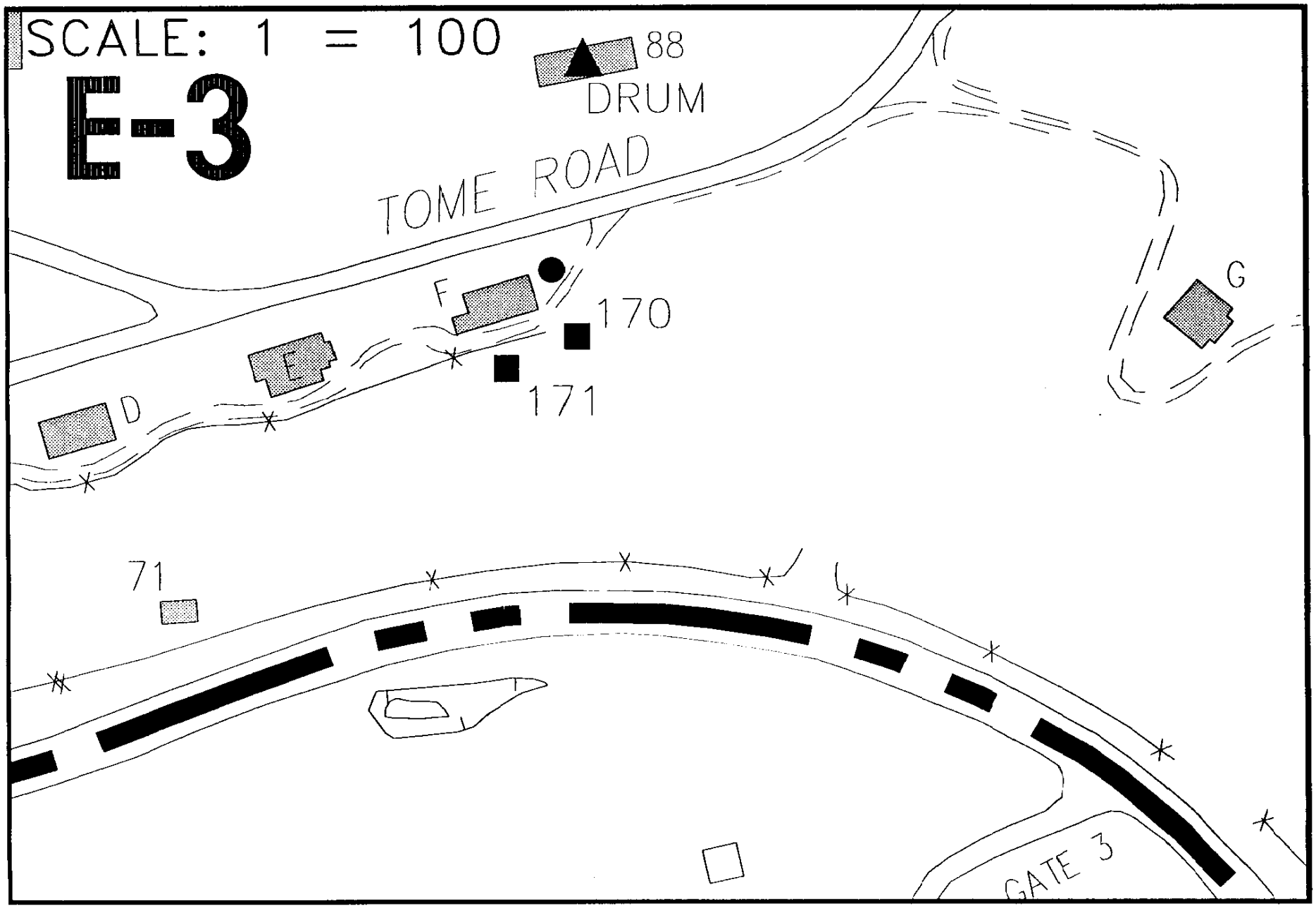
SCALE: 1 = 100
E-3
88
DRUM
TOME ROAD
F
170
E
171
D
G
71
GATE 3

APPENDIX C
STANDARD OPERATING PROCEDURES

MARYLAND DEPARTMENT OF THE ENVIRONMENT, WATER MANAGEMENT ADMINISTRATION
2500 BROENING HIGHWAY, BALTIMORE, MARYLAND 21224, (410) 631-3784

****

WATER WELL ABANDONMENT-SEALING REPORT FORM

****

JPIES OF COMPLETED FORM TO:
COUNTY ENVIRONMENT AGENCY (contact MDE, WMA if address needed)
WELL OWNER
MDE, WATER MANAGEMENT ADMINISTRATION, WELL PROGRAM

WELL ABANDONED: _____ (month/day/year)

PERMIT NUMBER OF ABANDONED WELL (if any) [ ][ ][-][ ][ ][-][ ][ ][ ][ ]

PERMIT NUMBER OF REPLACEMENT WELL [ ][ ][-][ ][ ][-][ ][ ][ ][ ]

PERSON ABANDONING WELL: _____

WELL DRILLERS LICENSE NUMBER: _____
CIRCLE: MWD/MSD/MGD

OWNER'S NAME: _____

WELL LOCATION:

COUNTY: _____
NEAREST TOWN: _____
TAX MAP _____ BLOCK _____ PARCEL _____
SUBDIVISION: _____
SECTION: _____ LOT: _____

MARYLAND GRID COORDINATES
E _____
BOX NUMBER <-----
N _____

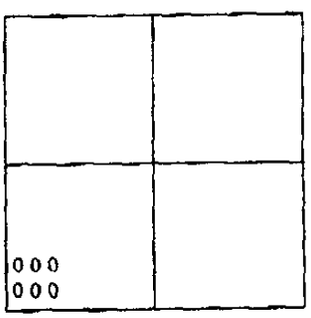

SHOW WELL LOCATION
BY X WITHIN BOX

PE OF WELL BEING ABANDONED:

_____ DRILLED _____ JETTED
_____ BORED/AUGUERED _____ HAND DUG
_____ OTHER (specify) _____

USE CODE:

_____ DOMESTIC _____ MUNICIPAL/PUBLIC
_____ IRRIGATION _____ INDUSTRIAL
_____ TEST/OBSERVATION

TYPE OF CASING:

_____ STEEL _____ PLASTIC
_____ CONCRETE _____ OTHER (specify)
_____

SIZE OF CASING: _____ INCHES IN DIAMETER

DEPTH OF WELL: _____ FEET DEEP

WAS ANY CASING REMOVED? ____ YES _____ NO
if yes, length removed, in feet: _____

WAS CASING RIPPED OR PERFORATED? ____ YES _____ NO

LOG OF SEALING MATERIAL

MATERIAL	FEET	
	FROM	TO

MWD/MSD/MGD

JNATURE-MASTER WELL DRILLER OR SUPERVISING SANITARIAN LICENSE # CIRCLE ONE DATE

;NV 828 JULY 1993

E. Disclosure.

(1) All special conditions written into an interim or final Certificate of Potability shall be disclosed to any purchaser of the property served by a well before entering into a contract of sale or lease.

(2) A person who fails to make this disclosure is subject to the penalties set out in Regulation .12F and Environment Article, §9-1311.

.10 Well Owners' Responsibilities.

A. Every well shall be maintained in a condition to conserve and protect the ground water resource.

B. After the well is completed, the well owner is responsible for maintaining the upper terminal of the well at the proper height indicated in Regulation .07F(3).

C. After the well is completed, the well owner shall maintain the access port in a manner which prevents the entrance of water, dust, insects, or other foreign material and permits ready access for water level measurements.

D. The owner of an artesian well shall maintain and operate the valves installed by the well driller pursuant to Regulation .07M(5).

E. After the well is completed, the well owner is responsible for maintaining the identification tag attached to the well.

.11 Abandonment Standards.

A. In this regulation, the term "well" shall also include all test holes drilled in the exploration of coal, oil and gas, or for gas storage, which penetrate into or through an aquifer, confined or unconfined.

B. "Abandon" means to permanently discontinue the use of a well. Any well shall be deemed abandoned when it is in such a state of disrepair that continued use for the purpose of obtaining ground water is impracticable or when it has been permanently disconnected from any water supply system or irrigation system.

C. Objective. The objective of the standards described in this regulation is to restore as nearly as possible those subsurface conditions which existed before the well was constructed, taking into account changes, if any, which have occurred since the time of construction.

D. General Requirements.

(1) An abandoned well shall be filled and sealed in such a way that it will not:

(a) Act as a channel for the interchange of waters of undesirable quality with those whose quality is desirable; or

(b) Present a hazard to the safety and well-being of humans or animals.

(2) The Department or Approving Authority may require the well owner to have a well abandoned and sealed if it:

(a) Is causing or is a potential source of pollution of waters of the State;

(b) Is producing water that is polluted; or

(c) Does not have a certificate of potability, if required.

(3) Any well abandoned shall be sealed only by a well driller licensed by the Maryland State Board of Well Drillers or under the supervision of a master well driller or a representative of the Department or Approving Authority.

(4) Abandonment Approval. When the Department or Approving Authority has reason to believe on the basis of local conditions that abandonment of a well necessitates close supervision, it may require the submission of sealing plans and specifications for approval before abandonment operations.

(5) Observation Wells. Wells used for the investigation or management of ground water are not considered "abandoned" so long as they are maintained for this purpose. Wells without pumps shall be covered with a secure cap when measurements are not being made.

(6) Reports on the Abandonment of Wells. When a well is abandoned, the person abandoning it, or the owner, shall notify the Approving Authority of this action by completing an Abandoned Well Report form provided by the Approving Authority. This report shall be submitted not later than 30 days after abandonment of the well or test hole.

E. Materials for Filling and Sealing Wells.

(1) Sealing Materials.

(a) Concrete, Portland cement grout, sodium-base bentonite clay, or combinations of these materials may be used to seal a well.

(b) Used drilling muds are not to be used to seal a well.

(c) Concrete. Concrete may be used for filling the upper part of the well or water bearing formation, or plugging short sections of casing and filling large diameter wells.

(d) Portland cement grout is superior for sealing small openings, penetrating any annular space outside the casing, and for filling voids in the surrounding formation. Portland cement grout shall be composed of one bag of cement per 5 to 8 gallons of water. Two parts sand to one part cement may be added.

(e) Bentonite clay, when applied as a heavy mud-laden fluid under pressure, has most of the advantages of cement grout but under some conditions may be carried away into the surrounding formation. A bentonite clay mixture shall be composed of not less than 2 pounds of clay per gallon of water. Bentonite clay may not be used where it will come in contact with waters of a pH below 5.0 or total dissolved solids content greater than 1,000 mg/l or both.

(2) Fill Materials. Clay, silt, sand, gravel, crushed stone, mixtures of these materials, and sealing materials described in §D(1) may be used as a filler in sealing a well. In the abandonment of an unsuccessful well, the drill cuttings may be used as fill material. Material containing organic matter may not be used. The Department or Approving Authority may require that fill material be disinfected.

F. Procedures for Sealing Wells.

(1) Preliminary Work.

(a) Before filling the hole, the well should be investigated to determine its condition, details of construction, and if there are obstructions which will interfere with the process of filling and sealing.

(b) If there are any obstructions, they shall be removed, if possible, by cleaning the hole or by redrilling.

(c) The casing shall be removed. If sidewall cave-in is likely to occur, the casing shall be removed gradually as the well is filled.

(d) In drilled wells, if it is not possible to remove the casing, the casing may be ripped or perforated to assure that sealing material fills all annular spaces and voids.

(2) Filling and Sealing Wells.

(a) A dug well exceeding 24 inches in diameter shall be filled and sealed by placing fill material (excluding clay or silt) in the well to a level approximately 5 feet below the land surface, and placing a 3 foot plug of sealing material above the fill. The remainder of the well shall be back filled with soil material.

(b) For other than dug wells, a well shall be filled with sealing material or a combination of sealing material and fill material as described below:

(i) A well in unconsolidated material in an unconfined ground water zone (Hydrogeologic Area 1) shall be filled and sealed by placing fill material in the well to the level of the water table, and filling the remainder of the well with sealing material. If the water table is at a depth greater than 40 feet, a minimum of 40 feet of sealing material shall be required.

(ii) Well Penetrating Several Aquifers or Formations.

(aa) A well penetrating several aquifers or formations (Hydrogeologic Area 2) shall be filled and sealed in such a way as to prevent the vertical movement of water from one aquifer or formation to another.

(bb) If the casing has been removed, sealing material shall be placed opposite confining formations, and from the surface down to the first confining formation. Sand and other suitable fill material may be placed opposite the producing aquifer. The driller has the option to fill the entire well with sealing material.

(cc) If the casing has not been removed, the entire well shall be filled with sealing material.

(iii) Well Penetrating Creviced or Cavernous Rock. In Hydrogeologic Areas 3 and 4, coarse fill material may be used opposite the cavernous or creviced rock portions of the well. Sealing material shall extend from the top of the hard rock portion of the well or base of the casing, whichever is deeper, to the surface. The minimum depth of sealing material may not be less than 10 feet.

(iv) Well Penetrating Specific Aquifers—Local Conditions. If local conditions necessitate the sealing of specific aquifers or formations, the Department or Approving Authority may require that the annular space in the area of the specific aquifers or formations be sealed during abandonment of the well.

G. Placement of Material. The following standards shall be met in placing fill or sealing materials:

(1) The well shall be filled with the appropriate material placed from the bottom of the well upward;

(2) When Portland cement grout or concrete is used, it shall be placed in one continuous operation;

(3) Sealing material shall be placed in the interval or intervals to be sealed by methods that prevent free fall, dilution, and/or separation of aggregates from cementing materials;

(4) For artesian aquifers with a large hydraulic (pressure head), it may be necessary to control the head or flow while placing the sealing material. In these cases, the casing shall be ripped or perforated opposite the area to be sealed and the sealing material shall be forced under pressure into the surrounding formation.

.12 *Enforcement.*

A. Responsibilities. For the purposes of this regulation, the Approving Authority shall exercise enforcement authority over all water wells and the Department of Natural Resources shall exercise enforcement authority over wells to be used for other purposes.

B. Procedure Upon Violation. If the Department or the Approving Authority determines that there has been a violation of this chapter or of any permit requirement, in the construction of a well, it shall serve upon the alleged violator a written complaint specifying the nature and extent of the violation, and a written order specifying items to be corrected and time limits for correction.

C. Abandonment Upon Failure to Correct. If a person violating a requirement of this chapter cannot correct the violation, the Department or the Approving Authority may require abandonment and sealing of the well.

D. Hearing. Any person aggrieved by an order to correct a violation or an order to abandon and seal a well may file within 5 working days from the date of the order a request for hearing before the agency issuing the order. A hearing will be scheduled within 2 weeks from receipt of the request. It shall be a contested case hearing, and the person aggrieved shall have the rights of a party under the Administrative Procedure Act, State Government Article, Title 10, Subtitle 2, Annotated Code of Maryland, and any regulations promulgated under it.

E. Service. Every complaint, order, notice of hearing, or other instrument issued by the Department or Approving Authority pursuant to this chapter shall:

(1) Be served on any person affected thereby personally, and proof of this service may be made in like manner as in the case of service of process in a civil action; this proof to be filed in the office of the Department or Approving Authority; or

(2) Be served by mailing a copy of the notice, order, or other instrument by certified or registered mail, return receipt requested, directed to the person affected, or his last known post-office address as shown by the files or records of the Maryland State Board of Well Drillers and proof thereof may be made by the sworn affidavit of the person who did the mailing, filed in the office of the Department or Approving Authority.

F. Penalties.

(1) Violation of any requirement of this chapter or of any permit or order issued under this chapter, is punishable as a misdemeanor under Environment Article, §9-1311, Annotated Code of Maryland. In addition to any administrative action which the Department or Approving Authority may take, violations may be referred to the Attorney General's Office for appropriate action.

(2) In addition to the penalty provided in §F(1), any person who violates any provision of this chapter with respect to wells used or intended for use as a potable water supply or for dairy farms is subject to a civil penalty of $100 for each offense. Any person who fails to comply with an order of the Approving Authority issued under this chapter is subject to the penalties set out in Environment Article, §9-268, Annotated Code of Maryland.

.13 Map.

(See map on following page)

1.0 OBJECTIVE

This procedure shall be used by OHM Remediation Services Corp. (OHM) personnel to ensure that the machine or equipment being worked on is isolated from all potential hazardous energy sources, and locked out or tagged out before an employee performs any servicing or maintenance activity where that unexpected energization, start-up or release of energy could cause an injury. Energy sources can be electrical, mechanical, hydraulic, pneumatic, chemical, thermal, or other energy.

2.0 PURPOSE

This procedure establishes the minimum safety requirements to ensure the proper deactivation of movable, electrically energized, pressurized equipment and systems, and systems containing hazardous materials prior to repairing, cleaning, oiling, adjusting, or similar work. This procedure complies with the requirements in the OSHA standard 29 CFR 1910.147–The Control of Hazardous Energy and 29 CFR 1910.333 Selection and Use of Work Practices.

3.0 REQUIREMENTS

This procedure applies to all equipment that receives energy from electrical power, hydraulic fluid under pressure, compressed air, steam, energy stored in springs, potential energy from suspended parts, or any other source that may cause unexpected movement when it is necessary to perform work on that system. It also applies to similar functions performed on systems containing hazardous materials. Every OHM project which has equipment requiring maintenance must implement a lockout/tagout try program.

4.0 DEFINITIONS

4.1 Lockout. The placement of a lockout device on an energy isolating device, in accordance with this procedure, ensuring that the energy isolating device and the equipment being controlled cannot be operated until the lockout device is removed. The lockout device can be key operated or a combination device.

4.2 Tagout. The placement of a tagout device on an energy isolating device, in accordance with this procedure, to indicate that the energy isolating device and the

FEB 13 '97 11:12AM OHM REMEDIATION SERVICES CORP P.2

equipment being controlled may not be operated until the tagout device is removed by the authorized person who originally placed the tagout device in position.

4.3 Authorized Employee. A person who locks or implements a tagout system procedure on machines or equipment to perform the servicing or maintenance on that machine or equipment.

4.4 Affected Employee. An employee whose job requires him to operate equipment which is locked out or whose job places him near a piece of equipment which is locked out.

5.0 PROGRAM ELEMENTS

Prior to initiating any repairs, modifications and/or adjustments to operating equipment, these steps will be followed.

5.1 Notification. The immediate supervisor with jurisdiction over the equipment and all affected employees will be notified that the energy sources are to be deactivated.

5.2 Identify Energy Sources. All sources of power that must be locked out, blocked or released will be identified by the immediate supervisor and the employee who will work on the equipment.

5.3 Lockout Energy Sources. In order to ensure that the equipment cannot be re-energized while maintenance activities are performed, the employee will lockout or blank out all potential energy sources. (The employees will either be assigned individually keyed padlocks or the project will have a supply of individually keyed padlocks for employee use.) If more than one employee is assigned to work on the equipment, a multi-lockout hasp will be used so that all employees working on the equipment can apply their locks and ensure their safety.

5.4 Tag Energy Sources. A tagout device will be affixed to all components or systems de-energized to indicate that lockout has been performed.

5.5 Try Energy Sources. Prior to performing any work activities, the employee will operate the start and stop controls on the equipment to ensure that the equipment has been properly deactivated. After the test, the equipment must be in neutral or off.

5.6 Remove Locks and Tags After Completing Work. After the servicing and/or maintenance is complete and the equipment is ready for normal operations, check the area around the machine or equipment. After all tools have been removed from the machine or equipment, guards have been reinstalled, remove all lockout or

FEB 13 '97 11:13AM OHM REMEDIATION SERVICES CORP P.3

tagout devices. Operate the energy isolating devices to restore energy to the machine or equipment.

6.0 SPECIAL CONDITIONS

6.1 Testing Equipment While Locked Out/Tagged Out. During certain operations it may be necessary to energize the equipment for a short period of time. Employees in the immediate area will be notified and directed to stay clear of the equipment. If the operation is to be deactivated again, the employee should repeat steps 5.3 to 5.5 of this procedure before work resumes.

6.2 Long Term Equipment Lockout. In some instances work will carry over to another shift. The maintenance supervisor shall affix his lock to the equipment to ensure that it is not energized during the transition. During subsequent shift operations, each employee will ensure that steps 5.2 to 5.5 are complete before work resumes on the equipment.

6.3 Prohibition on Removing Locks/Tags. If the work is completed and a lock remains on the equipment, it shall not be removed until the employee responsible for the lock is found or the supervisor of the employee investigates and ascertains that the equipment is safe to operate. Unauthorized removal of a lock will subject the violator to disciplinary action up to dismissal.

7.0 CORD AND PLUG EXCEPTIONS TO LOCKOUT/TAGOUT/TRY

There is no requirement to perform lockout/tagout/try on electrical installations where the unexpected energization of the equipment can be controlled by unplugging the cord from the energy source. The unplugged cord must remain under the exclusive control of the person performing the repair or maintenance.

8.0 TRAINING

Initial and annual training will be provided affected employees to ensure that the purpose and function of the energy control program are understood and that the knowledge and skills required for the safe application, usage, and removal of the energy controls are acquired by employees. The training shall include the following areas.

8.1 Authorized Employee. Each authorized employee shall receive training in the recognition of applicable energy sources, the type and magnitude of the energy available in the workplace, and the methods and means necessary for energy isolation.

FEB 13 '97 11:13AM OHM REMEDIATION SERVICES CORP P.4

8.2 Affected Employee. Each affected employee shall be instructed in the purpose and use of the energy control procedure.

8.3 Other Employees. All other employees whose work operations are or may be in an area where energy control procedures may be utilized, shall be instructed about the procedure, and about the prohibition relating to attempts to restart or reenergize machines or equipment which are locked out.

8.4 Tag Usage. When tags are used, employees shall be informed that these are only warning devices and do not completely secure an energy source as would a lock. Tags are not to be removed without authorization of the authorized person.

8.5 Initial and Refresher Training. Initial training will be performed in the 40-hour HAZWOPER course. Site specific training will be provided during the initial startup of a site's operational process requiring this energy control procedure. Retraining will occur whenever a new or revised control method and procedure is introduced. Periodically, this program will be reviewed in the 8-hour HAZWOPER refresher training and during site safety meetings.

9.0 PERIODIC INSPECTION

Corporate health and safety will conduct an annual audit of the energy control program to ensure that the requirements of these procedures are being followed.

FEB 13 '97 11:14AM OHM REMEDIATION SERVICES CORP P.5

STANDARD OPERATING PROCEDURE

Title: Documentation Procedures **Document #:** QP-605

Date Issued: October 12, 1993 **Rev:** 0 **Date:** October 12, 1993

1.0 PROCEDURE

1.1 To describe documentation procedures for sample collection, transportation and analysis.

1.2 To demonstrate step by step documentation procedures to be followed from the beginning to the end of a project.

2.0 SCOPE

2.1 This procedure provides information on the proper documentation procedures to be carried out in all sampling activities.

3.0 RELATED DOCUMENTS

3.1 OHM Corporation, Field Sampling Manual, 1993.

4.0 GENERAL INFORMATION

4.1 This SOP is a general overview and some projects may require documentation beyond what is described in section 6.0.

5.0 DEFINITIONS

None

© Copyright 1993 OHM Remediation Services Corp.

7.2.1.1 Emergency response situations (After 72 hours)

7.2.1.2 Long term project sites

7.2.1.3 Small scale one day sampling events

7.2.2 The sample plan is a document which describes the "how, when, why, and where" of the environmental sampling portion of a project. The sample plan is designed to give:

7.2.2.1 Detailed background information of the project site

7.2.2.2 The concerns and/or goals of the project

7.2.2.3 A step by step instruction of how samples are to be obtained, documented, and handled

7.2.3 The information provided in the sampling plan will serve as direction for the personnel obtaining the samples as well as to inform supervisory personnel of the manner in which samples will be collected. The information necessary to begin a sampling plan will be obtained from the Project Manager. This information should include the following:

7.2.3.1 Site history,

7.2.3.2 What needs to be sampled

7.2.3.3 What analyses are needed

7.2.3.4 What circumstances led to the need for sampling

7.2.3.5 What is needed to be accomplished from sampling

7.2.4 In addition, a site operational history and a review of previous study data, conclusions and recommendations (if available) are helpful in familiarizing the sampling crew with the investigations taking place on a particular project site.

7.2.5 The introduction section of a sampling plan will include the following:

7.2.5.1 Project name

© Copyright 1993 OHM Remediation Services Corp.

7.2.8 This section should include the technical approach (i.e. How are the samples going to be obtained? In what way can the objectives be accomplished?). This section is going to address the approach of the sampling efforts. The sampling strategy necessary to fulfill the objectives will need to be addressed. Below are some types of sampling strategies commonly used:

7.2.8.1 Random Sampling

7.2.8.2 Systematic Sampling

7.2.8.3 Stratified Random Sampling

7.2.8.4 Judgment Sampling

7.2.8.5 This section will also describe whether the samples will be:

7.2.8.5.1 Grab or composite samples

7.2.8.5.2 Surface or subsurface samples

7.2.8.5.3 Upgradient or downgradient

7.2.8.5.4 Influent or effluent

7.2.8.5.5 Every aspect of the "how" and "why" to attaining the project objectives are discussed in this section.

7.2.9 Sampling Methodologies

7.2.9.1 This section should describe in great detail the step-by-step procedures of how each type of sample will be obtained (reference will be made to SOP's for specific sampling methods). This should be a chronological order of events from set up of equipment, to physically placing the samples into the jars, and changing sample gloves. In addition, the usage of each specific sampling device will be discussed. Every task that personnel are required to perform should be described fully in this section.

© Copyright 1993 OHM Remediation Services Corp.

7.2.14 Analytical

7.2.14.1 This section should include a listing of each type of analysis for each matrix and sampling task. This could range from one analysis for many types of samples and matrices to several different types of analyses for a limited number of samples. The designated laboratory (or laboratories) must be listed in this section.

7.3 Dispatching Equipment

7.3.1 The second step in preparation for the project is the dispatching of equipment. A good practice is to make a listing of equipment on a separate sheet of paper. After completing this, review it. Also, check the equipment section of any applicable SOP's. Think about the task to be completed, then think about the list you have generated. Can you complete the task with this equipment? The dispatch is the single most important piece of documentation you can have. The reason for this is simple: If you don't have the proper equipment to complete the task, then how can the task be completed properly? The following is a listing of the steps necessary to complete a dispatch properly (remember, these steps are only the "how" of completing a dispatch, it is up to you as to "what" is put on the dispatch). For an example of a completed dispatch form, please refer to Figure 7.3-1, OHM dispatch form.

7.3.2 Instructions for filling out OHM's Dispatch Form

7.3.2.1 Original or Corrective - Check box which applies. Is dispatch an original or corrective?

7.3.2.2 To Job No. /Division - Billable job or division/shop number. The job/division number shall be the project accepting the expenses.

7.3.2.3 Destination - Commonly known city and state of the OHM site/OHM division/OHM region.

7.3.2.4 Client - Common site name and/or client name if there is a difference.

7.3.2.5 Date - Month, day, and year of departure.

7.3.2.6 Time - Time of the departure in military format (i.e. 0800hrs.)

© Copyright 1993 OHM Remediation Services Corp.

APPENDIX D
QA/QC PLAN

OHM Remediation Services Corp.
A Subsidiary of OHM Corporation

QUALITY CONTROL PLAN
FACILITY CLEANUP
NAVAL TRAINING CENTER - BAINBRIDGE
PORT DEPOSIT, MARYLAND

Prepared for:

DEPARTMENT OF THE NAVY
Contract No. N62470-93-D-3032
Delivery Order 0137

Prepared by:

OHM Remediation Services Corp.
Northeast Region
200 Horizon Center Boulevard
Trenton, New Jersey 08691-1904

Lawrence J. Stearns, P.E.
Project Manager

Jimmie L. Whedbee
Program QC Manager

John P. Franz, P.E.
Program Manager

February 15, 1997
OHM Project 19568QC

Revision 2
December 14, 1995

PROGRAM QUALITY CONTROL PLAN

FOR

PERFORMING REMEDIAL ACTIONS AT ENVIRONMENTALLY CONTAMINATED DEPARTMENT OF NAVY, MARINE CORPS, AND OTHER GOVERNMENT INSTALLATIONS

Prepared for:

Atlantic Division
Naval Facilities
Engineering Command
Norfolk, Virginia

John P. Franz, P.E.
Program Manager

12/14/95
Date

Michael Gilman
Program Quality Control Manager

12/14/95
Date

Navy Contracting Officer's Technical Representative (COTR)

1/17/96
Date

POLICY STATEMENT

OHM Corporation, Stone & Webster Environmental Technology & Services, Geraghty & Miller, Inc. and Versar, Inc. have joined together to provide Environmental Remedial Action services for Department of Navy, Marine Corps and other Government Agency installations. OHM is the prime. This partnership will be referred to as the Team throughout this document.

It is the policy of the Team to establish, implement, and maintain a cost-effective quality control plan (QCP) that provides for the achievement, verification, and improvement of quality. This policy is binding on the Team's personnel and applies to all activities performed by the Team and its subcontractors as stipulated in contractual agreements from proposal to final report.

All work is a process which can be planned, performed, assessed, and improved and utilization of the principles described in this manual will achieve the mission of the Team which is to provide professional services with competence and integrity and the high level of quality expected by our customers.

INTRODUCTION AND BACKGROUND

Program Level Quality Control Plan (QCP)

This QCP is based on the Team's Corporate Quality Assurance and Quality Control Programs which have been modified to address client and project requirements. This will ensure that activities are performed in accordance with client recognized methods as well as ensuring that quality, reliability, and safety are maximized and hazards and nonconforming conditions are minimized.

This QCP describes a quality system which reaches beyond traditional quality assurance methods. It recognizes that management, workers, and those who assess the quality of work must all make their unique contributions to achieve a high level of collective performance and thereby satisfy the expectations of our clients and those within our own organizations.

Phases of Work Covered

Environmental restoration projects generally involve one or more of the following phases:

- Remedial Construction/Site Restoration
- Operation and Maintenance
- Post Construction/Site Restoration Monitoring
- Preliminary Assessment
- Limited Site Investigation
- Remediation Investigation/Feasibility Study
- Remedial Design

This QCP is applicable to any and all phases of a specific project and establishes the management and operational requirements for all activities under its contract. The elements of this QCP shall be incorporated in total or in part in a Delivery Order specific QCP, which is prepared to satisfy the particular statement of work in the Delivery Order.

Implementation

The Delivery Order specific QCP shall be based on and implemented by existing Team and client procedures and nationally recognized guidance documents such as those published by the Environmental Protection Agency wherever possible and to the extent necessary to provide the requisite quality.

If a procedure does not exist to cover a particular quality requirement, one will be prepared by the project or by the appropriate group within the Team corporate organizations. Each of the individual procedures which apply will be identified in the Delivery Order specific QCPs.

TABLE OF CONTENTS

I. POLICY STATEMENT

ii. INTRODUCTION AND BACKGROUND

iii. TABLE OF CONTENTS

1.0 QUALITY SYSTEM

2.0 ORGANIZATION

3.0 QUALITY IMPROVEMENT

4.0 PROCEDURES

5.0 DESIGN CONTROL

6.0 PROCUREMENT SYSTEM

7.0 DATA ACQUISITION

8.0 FIELD OPERATIONS AND REMEDIATION

9.0 INSPECTION AND TESTING

10.0 CONTROL OF MEASURING AND TEST EQUIPMENT

11.0 DOCUMENTS AND RECORDS

12.0 NONCONFORMANCE AND CORRECTIVE ACTION

13.0 AUDITS

14.0 PERSONNEL QUALIFICATION AND TRAINING

APPENDIX A A LISTING OF STANDARD OPERATING PROCEDURES AND SEVERAL PROGRAM PROCEDURES

APPENDIX B SAMPLE QC FORMS

1.0 QUALITY SYSTEM

1.1 Contractor Quality Control Plan

The quality system described in this QCP applies to environmental restoration activities performed by the Team. Procurement documents are used to pass through equivalent requirements of this QCP to subcontractors. Subcontractors may elect to use their own quality control plans or work under this plan. If a subcontractor elects to use its own plan, it shall be reviewed and approved by both the Team and the Contracting Officer prior to commencement of the work. The procurement documents will also identify the alternative selected.

This QCP and its implementing documents require that activities affecting quality be documented, as appropriate, in drawings, specifications, work plans, instructions, procedures, and reports. Activities affecting quality shall be conducted under controlled conditions. These shall include appropriate equipment, such as tools and test equipment, suitable environmental conditions, and assurance that all specified conditions have been met. Specified conditions include such items as qualification of personnel and processes, and verification that required inspection or test operations have been satisfactorily completed.

1.2 Delivery Order Quality Control Plans

Delivery Orders are used to describe the scope of work. Upon receipt of a Delivery Order, a determination is made on the level of quality required and the elements of this QCP which are applicable.

Quality Control Plans are then prepared to address the specific activities described in the statement of work as conveyed by the Delivery Orders. These are prepared by the Program Quality Control Manager or designee and are based on the applicable portions of this QCP. Other program level documents which may be used to develop the Delivery Order specific QCPs include the Chemical Data Management Plan and Team member corporate procedures.

A separate QCP will be prepared for each Delivery Order.

Each QCP will be reviewed and approved as a minimum by the program level Quality Control Manager and the Program Manager. They will also be presented to the Navy for review and approval. In addition the Navy will be notified in writing prior to proposed changes to the QCPs and the revised QCPs will go through the same review and approval process as the original QCPs went through.

Delivery Order QCP's will address the specific sections of this Program QCP that apply either by reference, or total or partial incorporation. Each QCP will also include as applicable:

a) A chart showing the QC organizational structure and its relationship to the production side of the organization.

b) Name and qualifications, in resume format, for the Delivery Order QC Manager/Representative

c) Duties, responsibilities and authorities of each person in the QC organization.

d) Procedures for reviewing, approving and managing submittals, including the name(s) of the person(s) authorized to review and certify submittals prior to approval.

e) Testing laboratory information required by the paragraphs entitled "Accredited Laboratories" or "Testing Laboratory Requirements," when the information becomes available.

f) A Testing Plan and Log that includes the tests required, referenced by the specification paragraph number requiring the test, the frequency, and the person responsible for each test.

g) Procedures to identify, record, track and complete rework items.

h) Documentation procedures, including proposed report formats.

I) A listing of outside organizations such as testing laboratories, architects, and consulting engineers that will be employed by the Team and a description of the services these firms will provide.

j) A list of the definable features of work. A definable feature of work is a task which is separate and distinct from other tasks and requires separate control requirements.

2.0 ORGANIZATION

2.1 Requirements

The responsibility, authority and the interrelation of all personnel who manage, perform and verify activities affecting quality shall be defined; particularly for personnel who need the organizational freedom and authority to:

a) Initiate action to prevent the occurrence of nonconformances;

b) Identify and record any quality problems;

c) Initiate, recommend or provide solutions through designated channels;

d) Verify the implementation of solutions;

e) Control further processing, delivery or installation of nonconforming items until the deficiency or unsatisfactory condition has been corrected.

Individuals or groups who examine, audit, inspect, or otherwise verify an activity shall be independent of the individuals or groups performing the activity. Independence shall be achieved by assigning such responsibilities to the quality assurance organization, or other individuals or groups not responsible for performing the original activity.

2.2 Project Organization

The program organization is shown in Figure 2-1. A typical QC organization chart depicting the relationship between the program QC manager and the site QC managers/representatives is also provided as Figure 2-2.

2.2.1 Quality Control Manager - Program Level

The Program Quality Control Manager at the program level will:

- be the single point of contact for quality policy
- have overall authority to act on quality matters
- be responsible for managing the quality system
- manage the QC Managers at office and site locations
- have **stop work authority**
- have the freedom and independence to resolve quality issues at the Program Manager level or higher
- attend the coordination and mutual understanding meeting conduct/attend QC meetings as applicable.

The appointment letter which describes the Quality Control Manager's authority is shown in Attachment 2-1.

2.2.2 Quality Control Managers/Representatives Site Locations

QC Managers will be assigned to each office and site where D.O. specific work is being performed. These individuals may be from Stone & Webster, OHM or a subcontractor's organization and each will report

back to the QC Manager at the program level. OC Manager or QC Representative at site will coordinate site QC activities with ROICC (i.e. COTR's site Representative)

Under certain situations, such as when a site study and field investigation are the only activities within a particular scope of work, the same individual and staff, if required, will be responsible to be either in the office or at the site during the conduct of the work.

Each of the Office/Site QC Managers will have stop work authority and other similar responsibility and authority for their location as described for the Program Level QC Manager.

In addition they are responsible for maintaining a Delivery Order specific QCP as well as verifying that the work is performed in accordance with its requirements and Corporate Policy, guidelines, and requirements. This includes:

- daily reporting and providing required certifications
- conducting QC meetings
- identification of Quality Control Procedures for the conduct of the project activities
- review and approval of work/task plans, specifications, and procurement documents for inclusion of quality control requirements
- review of subcontractor Quality control Programs
- independent surveillance and audit of project activities
- verification that objective evidence has been prepared to document satisfactory performance of the work
- stop work authority on site

Subsequent sections of this QCP also describe QC activities as they relate to that section.

Alternates will be identified for each QC Manager to ensure coverage is provided at all times.

2.2.3 QC Staff

A QC staff shall be established to assist the Office/Site QC Managers. The staff size and expertise is based on the nature, schedule, and quantity of activities being performed. It will change as the work activities and stages of progress change.

2.3 Resolution of Conflicts

If a conflict develops between members of the project staff and the project QC staff, it will be elevated first to the program level QC Manager for resolution. If satisfactory resolution cannot be achieved, it will be elevated to the Program Manager and then to senior management, if necessary. All QC related conflicts and resolutions will be documented and sent to the Contracting Officer.

2.4 Coordination and Mutual Understanding Meeting

After submission of the QC Plan and prior to start of construction, the QC Manager will meet with the Contracting Officer to discuss the QC program required by this contract. The purpose of this meeting is to develop a mutual understanding of the QC details, including forms to be used, administration of on-site and off-site work, and coordination of the Contractor's management, production and the QC Manager's duties with the Contracting Officer. As a minimum, the Contractor's personnel required to attend shall include the project manager, project superintendent and QC Manager. Minutes of the meeting shall be prepared by the QC Manager and signed by both the Team and the Contracting Officer.

2.5 QC Meetings

After the start of construction, the QC Manager shall conduct QC meetings once every two weeks or as required by Contracting Officer/delivery order at the work site, or where specified, with the project superintendent and the foreman responsible for the upcoming work. The QC Manager shall prepare the minutes of the meeting and provide a copy to the Contracting Officer within 2 working days after the meeting. The Contracting Officer may attend any of these meetings. The QC Manager will notify the Contracting Officer at least 48 hours in advance of each meeting. As a minimum, the following shall be accomplished at each meeting:

a) Review the minutes of the previous meeting

b) Review the schedule and the status of work:

(1) Work or testing accomplished since last meeting
(2) Rework items identified since last meeting
(3) Rework items completed since last meeting

c) Review the status of submittals

(1) Submittals reviewed and approved since last meeting
(2) Submittals required in the near future

d) Review the work to be accomplished in the next two weeks and documentation required. Schedule the three phases of control and testing:

(1) Establish completion dates for rework items
(2) Preparatory phases required
(3) Initial phases required
(4) Follow-up phases required
(5) Testing required
(6) Status of off-site work or testing
(7) Documentation required

e) Resolve QC and production problems

f) Address items that may require revising the QC plan such as:

(1) Changes in procedures

OHM Remediation Services Corp.

Attachment 2-1

April 25, 1994

Mr. Michael Gilman
Stone & Webster
P.O. Box 5200
Cherry Hill, NJ 08034

RE: LANTDIV Program QC Manager

Dear Mr. Gilman:

This letter will serve as your appointment as the Team's Program Level Quality Control Manager on the referenced program and will also clarify your duties and authority in this position.

You will be authorized to use available resources to satisfy all applicable requirements of the Program Quality Control Plan and the Delivery Order versions of this Quality Control Plan.

This authorization specifically allows the authority to direct removal and replacement or correction of nonconforming work and stop work where continuation would be unsafe to personnel, harmful to the environment, or result in a significant degradation of quality.

You will be expected to work closely with program management and program management Team personnel, but you will not be directly responsible to anyone but myself for resolution of quality issues.

If you have any questions in this matter, please call me at (609) 588-6477.

Sincerely,

George E. Krauter
LANTDIV RAC Program Manager

GEK/jsn

pc: Jerry Haste, LANTDIV
Program File

LANTDIV PROGRAM OFFICE ORGANIZATION

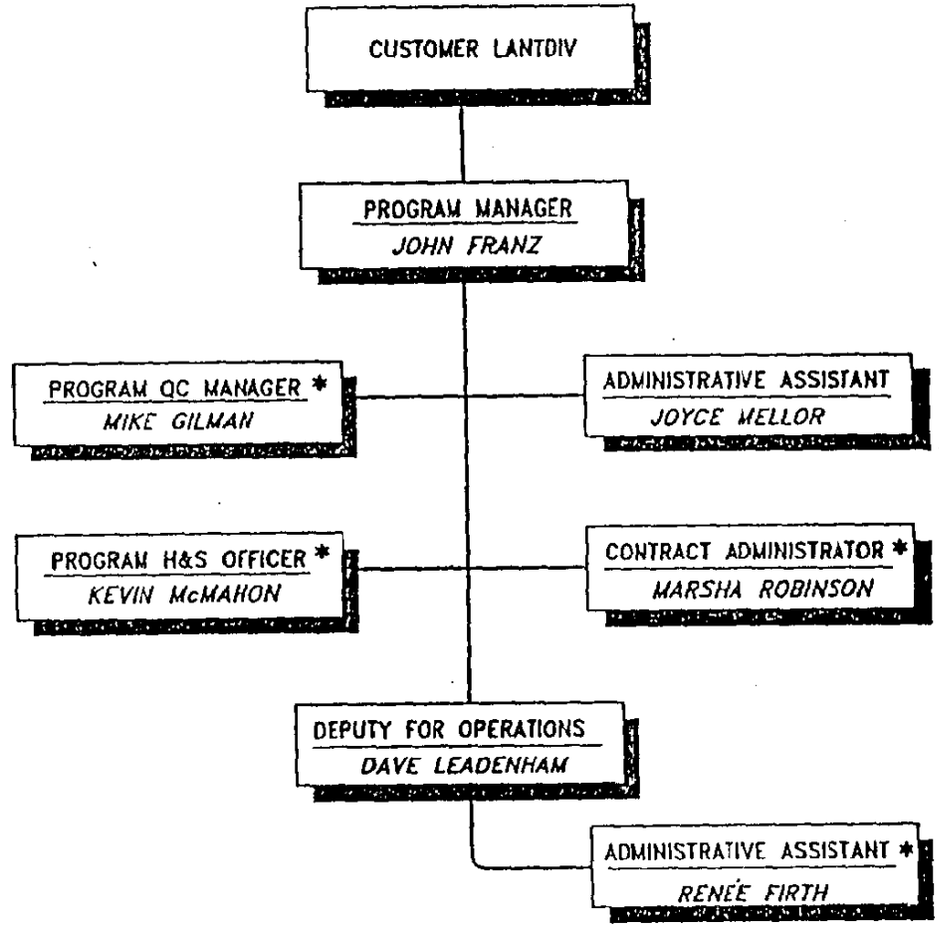

* HAS OTHER ASSIGNMENT OTHER THAN LANTDIV PROGRAM

FIGURE 2-1
PROGRAM OFFICE ORGANIZATION

OHM Remediation Services Corp.

13436-A5 DC 12/8/95 REV 2

QC ORGANIZATION CHART

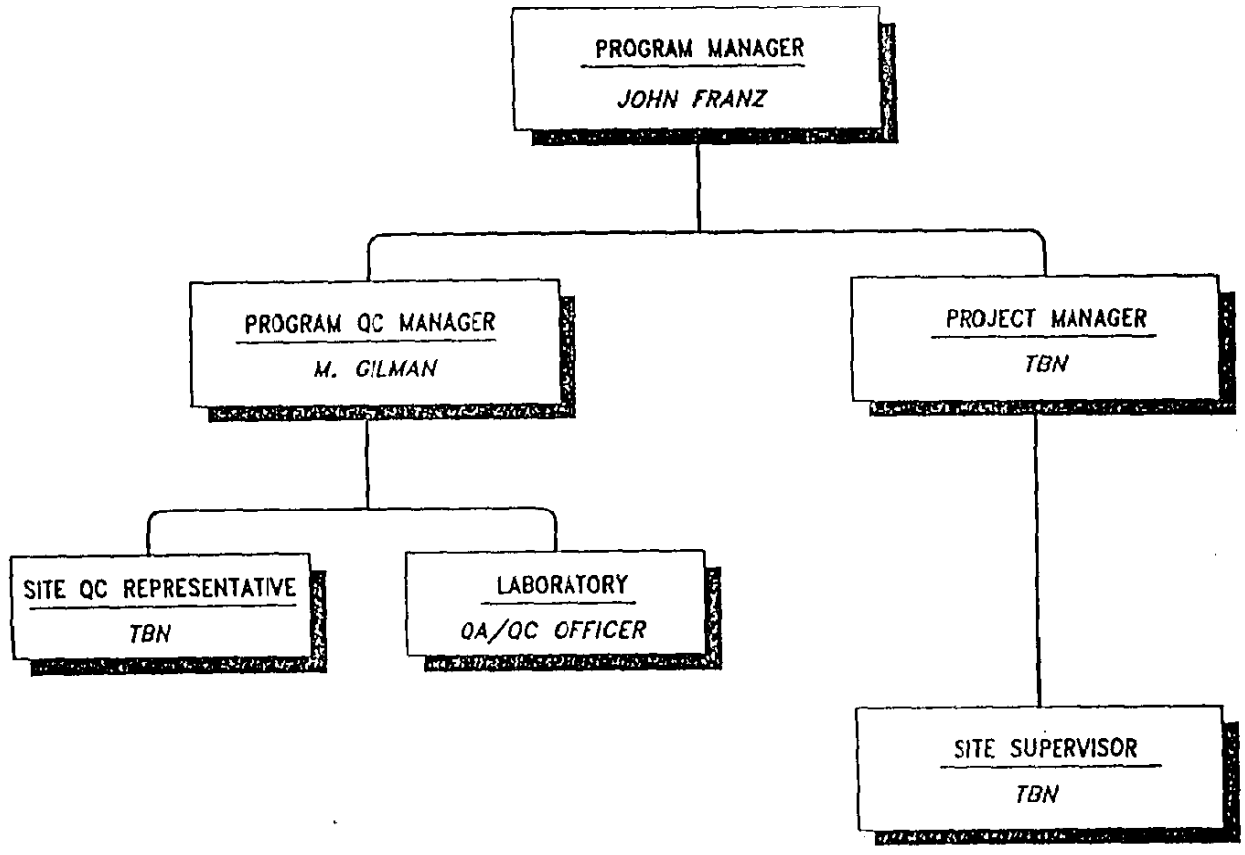

FIGURE 2-2
QC ORGANIZATION CHART

OHM Remediation Services Corp.

15435-A8 DL 12/8/95 REV 2

3.0 QUALITY IMPROVEMENT

3.1 Introduction

The Team management promotes an atmosphere of total quality which recognizes the importance of teamwork and focuses on quality improvement and problem prevention. This atmosphere promotes a no-fault attitude encouraging identification of items and processes which deviate from their intended purpose. It also fosters the identification and recommendation of ideas for increasing efficiency and upgrading quality in areas where improvements can be made. Project Management will support the quality improvement process to assure that the proper focus is provided, adequate resources are allocated, and difficult issues are resolved.

The Team has several formal methods to achieve quality improvement. These methods include identification control and dispositioning of unsatisfactory items, corrective action, and trend analysis, which are described in Section 12 of this QCP, peer reviews, value engineering, and assessments.

3.2 Peer Reviews

[Peer review if utilized will be described in Delivery Order QCPs.]

Peer reviews which are beyond the normal reviews conducted during the preparation of a work product, will be conducted in select areas and on select topics to evaluate performance, improve quality, and resolve professional differences of opinion. Peer reviews may be performed on program documents, implementing procedures, studies and reports in highly specialized technical areas, or special assessments. In general, each review is unique, has individual objectives, and requires that individual methodologies and technical skills be used.

Due to the unique nature of these reviews, an evaluation is performed by the Project Manager of the qualifications of potential reviewers to assure only properly qualified peer reviewers are selected. Each peer review will be formally documented and signed by the reviewers.

3.3 Assessment

A program will be established and implemented to periodically assess this QCP and its effectiveness. The program may include: management self-assessment to evaluate and improve the effectiveness of the QCP; and independent assessment to focus on improving items and processes by emphasizing line organization's achievement of quality. Quality may be assessed by reviewing, inspecting, testing, checking, conducting surveillances, auditing, or otherwise determining and documenting whether items, processes, or services meet specified requirements.

3.3.1 Management Assessment

Management will periodically assess the adequacy of this QCP and its implementation and identify improvements to be made. The management self-assessments will describe the review criteria, the methodology to be used, and the frequency necessary to identify and evaluate problems and promote quality improvement. Senior management will have overall responsibility for self-assessment activities and will directly participate in the self-assessment process to assure that proper focus is given, adequate resources are provided, and difficult issues are resolved. All levels of management will participate in self-assessment, as appropriate.

The management self-assessments will include, as applicable, the following:

(a) Identification of management barriers that hinder the organization from achieving its program objectives in accordance with contractual requirements

(b) Identification of significant systems-related quality assurance accomplishments, problems, and solutions

(c) Evaluation of the effectiveness of the management controls system to achieve and assure quality

(d) Evaluation of the adequacy of resources and personnel provided to achieve and assure quality in all activities

Findings and resulting recommendations of management self-assessments will be documented. Senior management will take prompt action and document decisions in response to recommendations resulting from self-assessment.

Follow-up to self-assessment will include an evaluation of the effectiveness of management's actions.

3.3.2 Independent Assessments

[Independent assessments if utilized will be described in Delivery Order QCPs.]

Assessments will be planned and implemented by an assessment Team to focus on improvement of item and process quality by emphasizing the line organization's achievement of quality. The assessment Team will be independent of the activities and the organization they are assessing. The frequency of assessments and the allocation of resources will be based on the complexity of the item or process being assessed and contractual requirements. The schedule should allow for flexibility and additional attention to be given to problem areas, as needed. The frequency and schedule of the independent assessments will be developed and documented in a project QCP. Personnel performing independent assessments will act in a management advisory function, be technically knowledgeable, focus on improving the quality of the processes leading to the end product, and will not have direct responsibilities in the area they are assessing. The responsibilities of the personnel performing independent assessments include, but are not limited to, the following:

(a) Monitoring work performance
(b) Identifying abnormal performance and precursors of potential problems
(c) Evaluating compliance with applicable procedures, plans, and contractual requirements
(d) Identifying opportunities for improvement
(e) Reporting results to a level of management having the authority to effect corrective preventive action
(f) Verifying satisfactory resolution of problems

Independent assessment results will be documented. Assessment results will be tracked and resolved by management having responsibility in the area assessed. Responses to assessment results will include: action to correct the deficiency; root cause identification; actions to prevent recurrence; lessons learned; and actions to be taken for improvement, as appropriate.

3.4 Value Engineering (VE)

Note: Due to the required separation of design and construction functions, it is not anticipated that Value Engineering will be used, except in very unusual circumstances.

[Value engineering if utilized will be described in Delivery Order QCPs.]

One or more VE Teams will be assigned to review a design in a highly structured VE study session (workshop). VE Teams are organized like any project Team, with staff from many engineering design disciplines. Each VE Team will have a Team leader (often a Certified Value Specialist, C.V.S.) and staff from civil, mechanical, electrical, structural, process, or architectural disciplines.

The VE Team will then establish targets for in depth analysis by establishing the basic functions the project is to perform (such as "analyze samples" or "control environment") and then identifying which basic functions are expensive. The basic functions are identified and prioritized graphically in Function Analysis Systems Technique (FAST) diagrams.

Those alternatives that have life cycle costs significantly less than that of the original (i.e., that could result in potential life cycle savings) are proposed to a review board by the team leader. If the review board accepts the proposal, the designer incorporates the alternative into the final design.

VE studies can be performed once or several times during the design process. If several VE Teams are assigned to a project, the first Team is called the "overview" Team and the later Teams are called "detail" Teams. It is not usually productive to perform a VE study after the design is 60 to 75 percent complete.

4.0 PROCEDURES

4.1 General Requirements

Work performed by the Team and its subcontractors is planned, authorized, and accomplished through a controlled process utilizing written instructions and procedures. The degree of complexity and detail in these instructions and procedures is commensurate with the risk consequences associated with the work being performed. The use of existing or development of suitable instructions and procedures is a prerequisite for the achievement of quality.

Activities affecting quality shall be based on or identified within written procedures, instructions, and engineering documents such as calculations, specifications, and drawings.

(a) These documents shall identify special process controls, and applicable codes and standards and shall establish both qualitative and quantitative acceptance criteria.

(b) They shall identify which individuals or groups are responsible for specific tasks and they shall also identify the quality record requirements.

(c) They shall also identify implementing procedures, instructions, specifications, etc., which will be prepared by contractors and submitted to the Team for review and approval before use.

4.2 Standard Procedures and Guidelines

Corporate procedures and other industry guidelines which shall be evaluated for use by the projects are available from the following sources:

- OHM Corporate Procedure Manuals
- Stone & Webster Corporate Procedure Manuals
- Client Procedure Manuals
- US Environmental Protection Agency guidance documents

A listing (i.e. the Table of contents) of OHM corporate standard operating procedures (SOP's) is attached to this program QC plan in Appendix A - "A Listing of Standard Operating Procedures (SOP's)". These procedures provide administrative/Technical guidance and direction in fulfilling the objectives of the assigned tasks. SOPs applicable to a specific delivery order shall be addressed in the plans (e.g., Sampling and Analysis Plan, QC Plan, Work Plan, etc.) for that delivery order, and shall be included with the corresponding plan as an attachment.

4.3 Customized Procedures

In certain cases project needs may dictate that a corporate procedure or industry guideline be modified. In other cases there may not be any reference document that is suitable for use. In both cases a customized project procedure shall be prepared to govern the performance of project activities.

Customized procedures may be required at either the program level or at the project level.

These procedures shall be prepared by the appropriate project members, i.e., quality control procedures by the Quality Control Program Manager, health and safety by the Site Health and Safety Officer, geotechnical by the Project Geotechnical Engineer, etc. They shall be reviewed and approved in accordance

with the Team member's respective organization's policy. Program procedures have been prepared to provide program-specific instructions. These procedures, which are listed and included in Appendix A, may be modified for delivery order-specific requirements.

4.4 Procedure Control

A procedure control system shall be established for program level and project level documents which identifies:

- the procedures that are controlled and their status
- holders of controlled procedures
- replace, cancellation, and recall methods

5.0 DESIGN CONTROL

Note: This section deals with the QA/QC of the Team's planning and preconstruction submittal process which may include contractor design of specific features of the work.

5.1 General Requirements

The Team's design process is based on sound engineering and scientific principles. It also recognizes that design requirements, inputs, processes, outputs, organizational interfaces, changes, and records must be controlled. The level of design control will be a graded approach based on the risk consequence of the design work performed. When deemed necessary, the program level QC manager shall provide recommendations to the program manager to establish procedures to ensure that the design process elements are defined and adhered to. In these situations, the QC staff shall verify that the design process is in accordance with the appropriate provisions of design control. Design control shall include the following elements as applicable:

(a) Design requirements shall be written, clearly defined, verified, and controlled.

(b) Design inputs shall be appropriately specified and correctly translated into final design documents, i.e., specifications, drawings, instructions and procedures.

(c) Design documents shall also include, as appropriate, acceptance criteria for inspections and tests.

(d) Design interfaces shall be identified and controlled and the design efforts shall be coordinated between groups in the Team's organization and between the Team and subcontractor organizations. Design information transmitted across interfaces shall be documented and controlled. Transmittals shall identify the status of the design or the document provided and where necessary, identify incomplete items. Where it is necessary to initially transmit design information orally or by other informal means, this transmittal shall be confirmed promptly by a controlled document (a document whose distribution, updating and use will be regulated).

(e) Measures may be taken to verify certain aspects of the design. Those aspects of design requiring verification shall be identified by the Team procedures and/or subcontractors. Verification methods may include one or more of the following: design reviews, comparison to other similar designs currently underway or previously completed, or use of calculations or analysis made by alternate means. Backup verification to validate computer programs if used shall be maintained on file.

(f) Verification may also include new concepts which are best tested by peer reviews.

(g) Changes to completed design documents, including field changes, and dispositions of nonconforming items or conditions which accept any item/condition in a configuration other than in its designed configuration, shall be documented, reviewed, and then approved. The review and approval shall be performed by the same organizations that performed the original design unless that organization is no longer responsible, in which case the review and approval shall be performed by the new responsible organization. See Procedure for As-Built Records in Appendix A.

5.2 Constructibility Reviews

[Constructability reviews if utilized will be described in Delivery Order QCPs.]

Constructibility reviews shall be performed by project personnel knowledgeable in the areas described by the design documents. This may be performed prior to issuance or subsequent to issuance with recommended changes incorporated into later revisions.

6.0 PROCUREMENT SYSTEM

[The extent to which these procurement system requirements will be utilized will be described in Delivery Order QCPs.]

6.1 General

The Team will establish a program for controlling the procurement of items, including measuring and test equipment, and subcontracted services. The Team will ensure that procured items and services meet established requirements and perform as specified in written procurement documents. Prospective suppliers will be evaluated and selected on the basis of the specified criteria. The Team shall ensure that approved suppliers can continue to provide acceptable items and services.

6.2 Control of Procurement Document Content

The procurement documents will include provisions for the following, as applicable to the scope of work or services:

(a) Scope of Work. A statement of the scope of work to be performed by the subcontractor will be in the procurement documents.

(b) Technical Requirements. Technical requirements will be specified. Where necessary, these requirements will be specified by reference to specifications, codes, regulations, procedures, quality assurance program documents, and statement of work requirements that describe the services to be furnished. The procurement documents will provide for identification of inspection, verification, and acceptance requirements for monitoring and evaluating the supplier's performance.

(c) Quality Assurance Program Requirements. Procurement documents will require that subcontractors have a documented quality system that implements portions or all of the requirements of this QCP, as applicable. The extent of the suppliers quality system will depend on the type and use of the service being procured.

(d) Right of Access. At each tier of procurement, the procurement documents will provide for access to supplier's facilities and records for inspection or audit by the Team or its authorized representative.

(e) Documentation Requirements. The procurement documents at each tier of procurement will identify the documentation required to be submitted to the Team for information, review, or approval and the time of submittal. The retention times and the disposition requirements for specific quality assurance records will be prescribed.

(f) Questionable or Unusable Data. The procurement documents will include the Team's requirements for reporting and approving disposition of questionable or unusable data.

6.3 Review of Procurement Documents

When required by the project specification/work plan, the Team QC staff will review the procurement documents and changes to assure that documents transmitted to the prospective supplier include adequate requirements, performance standards, and quality criteria.

The reviews of changes and their effects will be completed prior to transmittal to the prospective supplier. This review will include the considerations that the appropriate requirements are specified; any additional or modified performance criteria are determined; and, analysis of exceptions or changes requested or specified by the supplier and determination of the effects such changes may have on the intent of procurement documents or quality of the service to be furnished.

Reviews will be performed by personnel having access to pertinent information and having an adequate understanding of the requirements and the intent of the procurement documents. Procurement document changes will be subject to the same degree of control as utilized in the preparation of the original documents.

6.4 Source Evaluation and Selection

The selection of suppliers will be based on an evaluation of their capability to provide items and/or services in accordance with the specified procurement requirements. Measures for evaluating and selecting procurement sources will be documented and may include one or more of the following:

(a) Evaluation of the supplier's history of providing an identical or similar service which reflects the current capability

(b) Supplier's current quality assurance records supported by documented qualitative and quantitative information that can be objectively evaluated

(c) Supplier's technical and quality capability as determined by a direct evaluation of their facilities and personnel, an evaluation of the effectiveness of their implementation of their quality system, and, in the case of subcontracted analytical data acquisition services, the successful analysis of a set of performance evaluation samples

6.5 Performance Evaluation

Based on the status and importance of the site-specific activity and upon concurrence by the Navy, the Team QC staff will establish measures to periodically verify the performance of its suppliers through surveillance and/or audits of the activities at the source and technical verification of data produced to ensure that acceptable services continue to be supplied. The schedule and frequency will be commensurate with the complexity and the necessary quality in the service provided and will be documented in written procedures.

6.6 Acceptance of Services

The Team's procurement control program will include provisions for acceptance of services being furnished by its suppliers. The acceptance methods used (e.g., source verification, receipt inspection, technical verification of data produced) will be specified. Verification of specific characteristics will be performed at intervals and to a depth consistent with the service's complexity, quantity and frequency of procurement, and statement of work requirements.

6.7 Receipt Inspection and Verification

The Team QC staff will develop and document controls for the receipt inspection and verification of purchased items. The controls will provide for the following, as applicable:

(a) Verification that the items received were the items ordered
(b) Inspection for evidence of breakage, damage, or otherwise being unfit for use

(c) Verification that documentation is received and is acceptable
(d) Verification that the items conform with the supplier's published requirements

OHM standard operating procedures (SOPs) QP-040 and QP-041 shall be utilized for the receipt inspection, and verification of purchased items. When necessary, these procedures will be supplemented by the site-specific instructions/procedures.

6.8 Control of Measuring and Test Equipment

6.8.1 General

The procurement documents for measuring and test equipment will identify the supplier's published product description; the specifications of the service agreement, if applicable; the appropriate spare and replacement parts; supporting documentation required; and the inspection, test, and acceptance requirements upon delivery of the equipment, as discussed below.

6.8.2 Receipt Inspection and Verification of Measuring and Test Equipment

Controls will be developed to inspect and verify conformance of the measuring and test equipment with the manufacturer's specifications by fully exercising the range of capabilities and features of the equipment. The controls will be based on criteria derived from the manufacturer's published specifications and the required data quality that is specified contractually. The controls will include the number of quality control samples to be run, the number of data points to be collected, the initial calibration, and the necessary adjustments to be made to allow correct operation in the intended environment. The necessary controls and the results will be documented and retained for each procured piece of measuring and test equipment.

6.9 Control of Subcontracted Services

The Team may subcontract some of their services. Examples of such subcontracted services include calibration, data validation, computer related services, consultants, and analytical data acquisition. In general, the requirements of SOP QP-030, "Supplier Relationships," as applicable to subcontractors, shall be utilized to ensure use of qualified subcontractors.

6.10 Handling, Storage, Packaging and Shipping

The handling, storage, cleaning, preservation, packaging and shipping of items shall be controlled to prevent damage or deterioration.

Procurement documents shall include the following:

(a) Requirements for sellers to establish special procedures, when necessary, to ensure cleanliness, identification. and proper handling;

(b) Requirements for the preparation of items for shipment, as necessary, to prevent damage or deterioration of the supplied items; and

(c) Requirements for material and equipment storage instructions, when specified, to be available at the site well in advance of the arrival of material/equipment.

6.11 Laboratory Services

6.11.1 Testing Laboratory Requirements

When a proposed testing laboratory is not accredited by an acceptable accreditation program as described by the paragraph entitled, "Accredited Laboratories," it shall submit to the Contracting Officer, for approval, certified statements signed by an official of the testing laboratory attesting that the laboratory meets or conforms to the following requirements:

(a) Sampling and testing shall be under the technical direction of a registered professional engineer (P.E) with at least five years of experience in sampling and testing.

(b) Laboratories engaged in testing of concrete and concrete aggregates shall meet the requirements of ASTM C 1077, 1990.

(c) Laboratories engaged in testing of bituminous paving materials shall meet the requirements of ASTM D 3666, 1990 (Rev. A).

(d) Laboratories engaged in testing of soil and rock, as used in engineering design and construction, shall meet the requirements of ASTM D 3740, 1988.

(e) Laboratories engaged in testing of steel, stainless steel, and related alloys shall meet the requirements of ASTM A 880, 1989.

(f) Laboratories engaged in nondestructive testing (NDT) shall meet the requirements of ASTM E 543, 1989 (Rev. A).

(g) Unless otherwise directed by the Navy, laboratories performing work in connection with specific sampling and chemical analysis of contaminated media according to the delivery order specifications must be U.S. Navy approved, according to NEESA 20.2-047, current version, and subsequent versions, prior to performing any analysis. Sampling and analysis will be performed using current EPA procedures and quality control.

6.11.2 Accredited Laboratories - Performing Other Than Chemical Analysis

Acceptable accreditation programs are the National Institute of Standards and Technology (NIST) National Voluntary Laboratory Accreditation Program (NVLAP), the American Association of State Highway and Transportation Officials (AASHTO) program and the American Association for Laboratory Accreditation (AALA) program. The following documents shall be furnished to the Contracting Office: a copy of the Certificate of Accreditation, a Scope of Accreditation, and the latest directory of the accrediting organization for accredited laboratories. The scope of the laboratory's accreditation shall include the test methods required by the contract.

Labs doing sampling and chemical analysis shall conform to NEESA 20.2-047 as detailed in 6.11.1(g) above.

6.11.3 Inspection of Testing Laboratories

Prior to approval of non-accredited laboratories, the proposed testing laboratory facilities and records may be subject to inspection by the Contracting Officer. Records subject to inspection include equipment inventory, equipment calibration dates and procedures, library of test procedures, audit and inspection reports by agencies conducting laboratory evaluations and certifications, testing and management personnel qualifications, test report forms, and the internal QC procedures.

7.0 DATA ACQUISITION

7.1 General

The acquisition of reliable environmental data is of critical importance throughout the remedial process, including the assessment, design, remedial action, O&M, and project close out stages. Data includes that acquired both in the field and in the laboratory. Data acquisition activities will comply with NEESA 20.2-047B latest issue entitled, "Sampling and Chemical Analysis Quality Assurance Requirements for the Navy Installation Restoration Program." Additional reference materials may be utilized based on regulatory involvement with the project. For instance, QAMS-005/80 may be used if EPA review is involved.

The project specific Sampling and Analysis Plan (SAP) or Chemical Data Acquisition Plan (CDAP) will identify specific procedures to be used in the data acquisition process. This section of the program level Quality Control Plan, and the Quality Control Plan to be prepared for each Delivery Order, presents how the Quality Control Organization will relate to the activities described in the SAP.

7.2 Implementation

The acquisition of environmental data goes through several distinct phases, each with separate QC requirements. These phases and requirements are discussed in the following sections.

7.2.1 Planning

The planning phase is documented in the SAP. Key features which must be addressed include:

- Data Quality Objectives
- Field and Laboratory Procedures
- Sample Identification and Tracking Procedures
- Data Validation Procedures
- Chain of Custody
- Acceptance Criteria
- Reporting Procedures and Formats

The QC staff is responsible for reviewing the SAP to assure that pre-approved standardized procedures have been utilized where feasible and that appropriate additional procedures have been prepared where necessary. A key aspect of this review is to assure that procedures are clear and detailed so as to minimize field interpretations.

7.2.2 Field Activities

Field activities, as described in the project work plans, may include:

- Geophysical or soil gas surveys
- Boring and monitoring well installation
- Sampling of soils, sediments, and water
- Aquifer testing
- Field screening

The QC staff is responsible to assure that approved procedures are followed. This is accomplished by continuous inspection of field activities. Inspection activities are documented by completion of a daily quality control report. Deviations from approved procedures may be required in response to field

conditions. Deviations must be approved by the same individuals or organizations that approved the original procedure unless specifically designated otherwise.

7.2.3 Laboratory Analysis

Laboratory analysis is typically carried out using accepted USEPA, ASTM, NIOSH or other applicable method. Under rigorous QC conditions, the laboratory analysis is carried out by utilizing QC staff independent of the direct analytical staff. Under these conditions, a separate inspection of the day-to-day activities are not required. The QC staff performs programmatic audits to the functioning and documentation of the QC process. The audits are performed at frequencies established by agreement between the QC Manager and the Contracting Officer.

7.2.4 Data Validation and Reporting

7.2.4.1 Data Reduction and Tabulation

Data generated from the site activities can be grouped into two broad categories:

- Field data, such as data collected during VOC screening
- Chemical data for environmental samples generated by the project laboratory and accompanying QA/QC data package deliverables as required for DQO Level II and Level III

These data will be compiled and managed using a central project filing system. The field and laboratory data filing system will be a manual storage system established at the Contractor's field office at the Site. Field and laboratory data will be filed chronologically. Field log books, sample logs, sample data sheets, chain-of-custody records, laboratory log books, and laboratory calculation sheets shall be labeled with a task number and date.

Chemical data can be stored in a spread-sheet based system (e.g., LOTUS 123, EXCEL), with separate files maintained according to sample medium and validation status. The project laboratory shall provide the Project Coordinator and Contractor with computer diskette files containing the analytical data, if required.

7.2.4.2 General Procedures for Data Review/Validation

7.2.4.3 Level I Data

Level I data (e.g., screening for VOCs) will be validated by reviewing calibration and maintenance records for field instruments and field logbook information associated with individual data sets to ensure that appropriate SOPs were followed. Data validation, therefore, will be qualitative, and will focus on whether field screening data are of acceptable quality based upon supporting documentation. Acceptance or rejection of data will be determined by the judgement of experienced field personnel familiar with the SOPs.

7.2.4.3 Level II Data

Level II data will undergo qualitative and semi-quantitative review based on the standards or performance of the equipment in use. Acceptance or rejection of Level II data will be based on the judgement of qualified personnel. Level II review would include activities similar to Level I, i.e., review of instrument calibration concentrations.

7.2.4.4 Level III Data

Generation of the Level III data will include the analysis of QA/QC samples, including blanks, calibration and reference standards, and possibly spiked samples in some instances; however, a complete CLP QA/QC analysis program will not be performed for these samples. Items that will be reviewed to validate the data include:

(1) Integrity and completeness of the data package
(2) Holding times from sample receipt at the laboratory to sample extraction and analysis or holding times from sample receipt to analysis, as appropriate
(3) Trip blank and laboratory method blank sample results
(4) Matrix spike, matrix spike duplicate, and replicate analyses
(5) Surrogate recoveries
(6) Field blank sample results
(7) Field duplicate results

Data validation will be a qualitative process. Review of precision, accuracy, representativeness, completeness and comparability criteria will be included whenever measurement data are reviewed. The analytical laboratory will provide numerical precision and accuracy data that will be compared to the acceptance criteria. Precision and accuracy values for project data sets that are within the ranges for the type of sample and analytical method used will be considered acceptable. In some cases, data of apparently poor precision and/or accuracy may be somewhat useful. The judgement to accept such data, with appropriate qualifications, will be made by a data validator with appropriate technical expertise.

8.0 FIELD OPERATIONS AND REMEDIATION

8.1 Introduction

A graded approach to quality control and quality assurance will be implemented. Each subcontractor will be held responsible to establish a quality plan and perform all first line acceptance inspections. Placing this responsibility with line management is a key element in a cost-effective QA/QC program. Construction management personnel will have the responsibility for acceptance of completed work from the subcontractors. The QC organization has final acceptance of the quality of all remedial action work.

The Team will also implement a three-phase quality control framework for all definable features of work which will establish a preparatory, initial and follow-up phase. We will also coordinate with the Contracting Officer to define under what circumstances additional preparatory and initial phase monitoring will be warranted.

The Team's testing and inspection guidelines will be in accordance with accepted and required industry methods and practices. We will establish hold points at critical junctures of the work to assure that the work is performed properly the first time. Documentation for all inspection and hold points will be maintained by the QC staff and forwarded to the Navy for their recordkeeping purposes.

The Team will provide quality program orientation and training programs as required. This training will be provided to new employees at the time of assignment and other project personnel, as required, based on their job assignment experience. The program will be developed from site specific job descriptions and needs analysis to establish the initial and ongoing training requirements of project personnel. All training will be coordinated through the Quality Control Manager.

8.2 Organization

The QC organization will consist of not less than one full-time QC person who will be on the job site while work is in progress to verify compliance with the contract requirements. The QC organization will be supplemented by additional QC personnel as may be necessary. The QC person on site may have other duties if allowed by the Delivery Order or the Contracting Officer.

8.3 Quality Control Staff Duties and Responsibilities

The responsibilities of the QC Manager and QC Staff will include:

- Conducting coordination and mutual understanding meetings, and QC meetings.
- Perform, or cause to be performed, daily inspections and tests of the scope and character necessary to achieve the quality of construction outlined in the plans and specifications for work under the contract.
- Maintain the latest applicable drawings and specifications with amendments and/or approved modifications at the job site and assure that they are used for shop drawings, fabrication, construction, inspections, and testing.
- Maintain marked-up drawings at the site depicting as-built conditions, as required by the "As-Built Records" procedure in Appendix A. The drawings will be available for review by the Navy at all times.

- Prepare and maintain the submittal register for the duration of the contract. A review of the register will be performed at least every 14 days in conjunction with the scheduled dates on the register and in relation to the actual work status. Appropriate actions will be undertaken should slippages or other changes so necessitate. The submittal register may be furnished by the Navy.

- Review shop drawings and/or other submittals for compliance with the contract requirements prior to their transmission to the Contracting Officer.

- Maintain a listing of required operation and maintenance (O&M) manuals and instructional requirements with inspection/action dates.

- Authorization to temporarily shut down a portion of work if work practices or procedures are determined to be incorrect or out of compliance with the specifications.

- Authorization to stop a work task or series of tasks after consultation with the Site Supervisor and Contracting Officer in the event that severe weather conditions interfere with quality of work.

- Responsible for testing construction materials for compliance with specifications and authorized to reject materials to be used if they are not in compliance.

- Responsible for QC of Chemical Analysis activities.

- Establish and maintain a Nonconformance and Corrective Action program and a tracking and/or suspense system to monitor and assure inspection and testing activities and frequencies are in accordance with the contract requirements.

- Identify qualified, discipline reviewers to review and certify submittals.

8.4 Methods of Inspection

A structured control system will be implemented for each major work task and will include preparatory, initial, follow up, and safety inspections. The QC staff will assure that no work proceeds until the appropriate inspection phase has been performed. In addition to, and independent of the QC staff, other inspection personnel will implement this same control system as part of their normal duties/responsibilities. The inspection phases are discussed in Section 9.

8.5 Inspections

In addition to QC staff directed inspections, standard inspections will be performed during the course of remediation to verify the quality of the final constructed work. They will be visual inspections performed by the Site Supervisor, a qualified general foreman, or other appropriate personnel. These inspections are supplemental to the QC inspections and are intended to enhance the QC inspections by identifying problem areas that may require more stringent QC inspection. In the event of a discrepancy between one of these visual inspections and the field verification test performed, the field verification test result will take precedence.

Inspections will be performed in accordance with this plan and checklists developed for the remediation. Inspections performed to a guide procedure will be documented in the daily field log while inspections performed to a checklist will be documented on the checklist.

8.6 Nonconformances

It is the Team's responsibility to identify and correct deficiencies in the work. To ensure that defective work is corrected and not built upon, a Nonconformance System will be implemented. Deficiencies identified in the work during any of the inspections or testing programs by any party will be corrected as soon as practicable. The nonconformance and corrective action system is described in Section 12.

8.7 Performance Documentation

To provide evidence of satisfactory work performance verification of test data, and results of field inspections will be completely documented. Whenever possible, information will be recorded on a standardized form or in a bound field logbook. Documentation will include a daily log of construction activities; the appropriate field test, laboratory test, and survey data forms; and photographs.

Construction inspection personnel (e.g., Site Supervisor and General Foreman) will keep a daily log of project activities. Copies of the daily logs will be sent to the Site Supervisor on a daily basis. After review of the logs, they will be routed to other members of the project Team as needed.

As part of the remediation control activities, a photographic record is to be prepared. Photographs will be in color. As examples, photographs could be taken of field testing, sampling locations, remediation processes, and final constructed features.

Photographs are to be identified with the project number, date taken, and a brief description. This may be done individually on the back of the photographs or in an album in which the photographs are mounted. Album photographs must be provided with individual descriptions and dates taken.

Appropriate remediation control test, survey, and material installation data forms will also be prepared. They will include, as appropriate, the activity location (e.g., station, elevation, and field coordinates). All requested information will be addressed. If not applicable, requested information will be designated as such. Results of field and laboratory testing will be sent to the Contracting Officer, the Project Manager, Site Supervisor, the QC System Manager and Project Engineer, as appropriate, as soon as they become available.

Field construction verification records will be collected and maintained by the Site Supervisor until they are submitted to the project central file.

8.8 Review of Construction Control Data

The QC staff will review the construction control data to verify that remediation specifications are being met, to determine when defective material or work may require removal and/or reconstruction, and to determine when additional testing may be required to confirm the quality of the material or work. The results of field tests, field inspections, receiving inspections, and surveys will be reviewed by the QC staff. The review will be made on a daily basis to prevent the construction of new work over material or work which is later found to be defective.

8.9 As-Built Documentation

All appropriate documentation will be retained in the project records system to provide documentation of how the remedial action activities were actually performed. Final as-built drawings and specifications will be prepared utilizing this information and retained as a permanent record of the final location, dimensions, and orientation of the work.

At contract closeout, record documents will be delivered to the Contracting Officer. A transmittal letter in duplicate accompanying the submittal will contain:

- Date
- Contract name and number
- Contractor's name, address, and telephone number
- Number and title of each record document
- Signature of contractor or his authorized representative

8.10 Production and Inspection and Testing Documentation

Daily records of production activities and inspections and tests performed for each shift or subcontractor operation will be prepared using forms provided in Appendix B and the original and one copy provided to the Contracting Officer no later than the next working day.

9.0 INSPECTION AND TESTING

9.1 Introduction

Inspections and tests are performed in accordance with written procedures which identify the item characteristics and processes to be inspected and tested, inspection techniques (where applicable) acceptance criteria, hold points (where applicable) and the inspecting and testing organization. Inspection and test results are documented and, when acceptance criteria are not met, deficiencies are identified and resolved and reinspection performed (if required). Where appropriate, procedures shall be established and maintained for identifying adequate statistical techniques required for verifying the acceptability of process capability and item characteristics.

The inspection and test program described below will be administered by the site Quality Control System Manager/Representative and the QC staff.

9.2 Inspection Phases

The inspection program consists of three phases of inspections prior to and during the performance period. This inspection approach ensures quality control in the field through multiple inspections during all phases of job performance for each definable feature of work specified in each delivery order. A definable feature of work is a distinct task with separate control requirements. The three phases are as follows:

- Preparatory Inspections - Inspections performed prior to beginning each feature of work on any on-site activity. These inspections include: review of submittal/contract requirements with supervisory personnel; verification of provisions required for field control testing; examination of the work area to ascertain completion status of preliminary work; verification of field dimensions; and physical examination of materials and equipment. The Contracting Officer will be notified a minimum of 48 hours prior to the beginning of the preparatory inspections.

- Initial Inspection - Inspections performed when work begins on a representative portion of a particular feature of the work and includes an examination of the quality of workmanship, resolution of conflicts, a verification of contract document compliance, including the Health and Safety Plan and any applicable activity hazard analysis, and a review of control testing. The Contracting Officer will be notified a minimum of 48 hours prior to the beginning of the initial inspections.

- Follow-Up Inspections - Inspections performed continuously as any particular feature of work progresses to verify and document: work is in compliance with contract requirements; that the quality of workmanship is being maintained; that required testing is being performed; and that rework items are being corrected. The inspections continue until the completion of that feature of the work.

Also daily safety inspections of the site and the work in progress to ensure compliance with occupational health and safety requirements of the contract will be performed by the Site Safety Officer or designee. Final follow-up checks are conducted and all deficiencies corrected prior to the start of additional features of work which may be affected by the deficient work.

9.3 Notification of Three Phases of Control for Off-Site Work

The QC Manager will notify the Contracting Officer at least two weeks prior to the start of the preparatory and initial phases.

9.4 Inspection Activities

The QC plan for each delivery order will identify which of the following activities that will be performed.

- Field Inspections - Primarily visual examinations, but also may include measurements of materials and equipment being used, techniques employed, and the final products. These inspections confirm that a specific guideline, specification, or procedure for the activity is successfully completed. They are performed either during remediation or construction, or shortly after completion of the work with the results of visual inspections documented in the CQC daily report or on a checklist.

- Field Tests - Tests or analyses made at or in the vicinity of the job site in connection with the remedial action. They are performed primarily on samples or in situ portions of the as-built structure to determine whether construction performance meets the project requirements. Field tests are performed as soon as possible after material receipt or completion of the portion of the constructed work which is to be tested to provide prompt confirmation or rejection of the material or constructed work and minimize the potential of having to remove satisfactory work which has been added to defective material or work.

- Laboratory Tests - Testing performed by on-site or off-site laboratories on samples of materials used to characterize materials and confirm performance. These tests are performed as soon as possible after samples are obtained to provide prompt confirmation or rejection of material or the constructed work.

- Receiving Inspections - Inspections which include a visual examination and measurement of materials obtained from suppliers when they arrive at the site. They are performed to verify that the materials received meet design specifications, are free of defects, and have not been damaged in transit.

- Surveys - Surveying includes the establishment of horizontal and/or vertical grade control for construction, establishment of elevation benchmark, reference/location surveys for structures in the vicinity of the job site and topography, as appropriate. Volume/quantity surveys and in-place volumes are also included.

- Review of Manufacturers Certificates - Certificates obtained from suppliers for selected shipments of materials received are reviewed by the QC staff. They include a statement of the requirement which the material must meet, verification that the materials meet the requirements, supporting test results, and the quantity supplied.

- Compilation of Checklists - Checklists required for critical inspections and filled out during the course of the inspection to document inspection results. These checklists are continuously maintained by the site QC Manager.

9.5 Inspection and Test Status

- Inspection and Test Status - The status of inspection and test activities shall be identified either on the items or on documents traceable to the items where it is necessary to assure that the tests and inspections have been performed. Status will be maintained through the use of indicators, such as physical location and tags, markings, stamps, inspection records or other suitable means. The authority for application and removal of these status indicators will be the QC Manager and QC staff unless identified otherwise.

- Rework Items List - The Site QC Manager/Representative shall maintain a list of work that does not comply with the contract, identifying what items need to be reworked, the date the item was originally discovered, and the date the item was corrected. There is no requirement to report a rework item that is corrected the same day it is discovered. Rework Items List will be attached to the last daily Contractor Quality Control Report of each month. The Contractor shall be responsible for including on this list items needing rework including those identified by the Contracting Officer.

9.6 Test Results

Laboratories preparing test results shall: cite applicable contract requirements, tests or analytical procedures used; provide actual results and include a statement that the item tested or analyzed conforms or fails to conform to specified requirements; and conspicuously stamp the cover sheet for each report in large red letters "CONFORMS" or "DOES NOT CONFORM" to the specification requirements, whichever is applicable. Test results shall be signed by a testing laboratory representative authorized to sign certified test reports. The laboratory shall furnish the signed reports, certifications, and other documentation to the Contracting Officer via the QC Manager.

The QC Manager will furnish a summary report of field tests at the end of each month, and attach a copy of the summary report to the last daily Contractor Quality Control Report of each month.

10.0 CONTROL OF MEASURING AND TEST EQUIPMENT

10.1 Requirements

When tools, gauges, instruments, and measuring and test equipment (M&TE) are used for activities affecting quality, both in the laboratory and in the field, the calibration and use of such equipment shall be controlled. The control program shall:

- Identify, calibrate and adjust all inspection, measuring and test equipment and devices that can affect quality at prescribed intervals, or prior to use, against certified equipment having a known relationship to nationally recognized standards. Where no such standards exist, the basis used for calibration shall be documented;

- Establish, document and maintain calibration procedures, including details of equipment type, identification number, location, frequency of checks, check method, acceptance criteria and the action to be taken when results are unsatisfactory;

- Ensure that inspection, measuring and test equipment is capable of the accuracy and precision necessary;

- Identify inspection, measuring and test equipment with a suitable indicator or approved identification record to show the calibration status;

- Maintain calibration records for inspection, measuring and test equipment;

- Assess and document the validity of previous inspection and test results when inspection, measuring and test equipment is found to be out of calibration;

- Ensure that the environmental conditions are suitable for the calibrations, inspections, measurements, and tests being carried out;

- Ensure that the handling, preservation and storage of inspection, measuring and test equipment is such that the accuracy and fitness for use is maintained;

- Safeguard inspection, measuring and test facilities, including both test hardware and test software, from adjustments which would invalidate the calibration setting.

Where test hardware (e.g., jigs, fixtures, templates, patterns) is used as a means of inspection, it shall be checked to ascertain that it is capable of verifying the requisite level of quality prior to release for use during production and installation and it shall be rechecked at prescribed intervals. The program shall establish the extent and frequency of such checks and shall maintain records as evidence of control.

A systematic program of preventive maintenance shall be in place to minimize M&TE downtime, and document the preventive and remedial measures taken on each piece of M&TE. Preventive maintenance shall be in accordance with the M&TE manufacturers' written instructions.

10.2 Responsibilities

The respective Team members are responsible to establish procedures for the control and calibration of measuring and test equipment which is used in engineering activities (e.g., field sampling, equipment, and

system testing, etc.) and site activities. See Appendix A for the program-specific procedure on the control and calibration of measuring and test equipment.

Subcontractors are responsible for establishing, maintaining, and implementing the calibration control program for measuring and test equipment used to demonstrate the conformance of items within their respective contracts.

The Team QC staff is responsible to verify that only calibrated inspection, measuring, and test equipment is used at the site, and that inspection and test records identify the M&TE used.

11.0 DOCUMENTS AND RECORDS

11.1 Program Administration

Documents and Records for each Delivery order will be administered by the project manager or designee at the headquarters office and by the site supervisor/superintendent or designee at the site office. The Project Manager has overall responsibility for project documents and records.

11.2 Document Control

11.2.1 General

The Team will apply controls to the preparation, review, approval, issuance, use, and revision of documents that establish policies, specify quality requirements or prescribe activities affecting quality. Examples of documents to be controlled include, but are not limited to, this QCP and implementing procedures, Delivery Order QCPs, Standard Operating Procedures (SOPs), data files, calculations, computer codes, purchase orders and related documents, vendor-supplied documents, and calibration schedules and records. The methods for document generation and control will take into consideration the risk consequence associated with the work to which the document applies.

11.2.2 Document Preparation, Review, Approval, and Issuance

Written procedures will provide for (a) through (d) below:

(a) Assignment of responsibility for preparing, reviewing, approving, and issuing documents
(b) Review of documents for adequacy, completeness, and correctness prior to approval and issuance
(c) Timeliness guidelines for distribution of new or revised controlled documents.
(d) Final disposition of superseded documents via a documented change control process to ensure that only current documents are in use

11.2.3 Document Changes

Minor errors in documents, such as inconsequential editorial corrections, will not require that the revised documents receive the same review and approval as the original documents. These may be issued on "errata" sheets. To avoid a possible omission of a required review, the type of minor errors and persons who can authorize issue of such an errata sheet will be clearly delineated.

Other than those defined as minor changes, changes or revisions to documents will be reviewed and approved by the organization that originally reviewed and approved the documents or by a designated qualified organization.

11.3 Quality Records

11.3.1 General

Quality records as defined in the Project Manual and the Delivery Orders will be effectively controlled, protected, and retrievable throughout their designated lifetimes.

A records system will be established at the earliest practical time consistent with the schedule for accomplishing work activities. The records system will be defined, implemented, and enforced in

accordance with written procedures, instructions, or other documentation. Documents that are designated to become records will be identifiable, legible, accurate, complete, and appropriate to the work accomplished.

A submittal register will be developed of quality records to be maintained. This list may include, but is not limited to, results of performance and systems audits, procurement records, reports of unsatisfactory items or questionable data, qualification and training records, quality control procedures, field sampling notebooks, calibration records, data reports, this QCP and Delivery Order QCPs, standard operating procedures, data files, calculations, computer codes, computer verification documents, purchase orders and related documents and subcontractor supplied documents.

The job title of the individual having responsibility for archiving records will be identified. Access to completed records will be limited to authorized personnel. Mode of access and authorization criteria will be defined in the written project procedures.

11.3.2 Records Identification, Indexing, and Distribution

The records will be indexed. The indexing systems will include record retention times and the location of the record within the records system. Records and/or indexing systems will provide sufficient information to permit identification between the record and the item(s) or activities to which it applies.

The records will be distributed, handled, and controlled in accordance with written project procedures. (See Appendix A for list of Standard Operating Procedures.)

11.3.3 Corrected Information in Records

Records may be corrected in accordance with procedures that provide for appropriate review or approval by the originating organization. Corrections will include the date and the identification of the person authorized to issue such correction, and will not obliterate the corrected data. The corrected record will then be distributed, handled and controlled in the same manner as the original record. A program-specific procedure for the approval and issuance of as-built records has been developed and included in Appendix A.

11.3.4 Records Retention

Quality assurance records will be controlled, stored, and protected by the Team while in their possession and turned over to the Navy after a period of time that will be contractually determined. The Team will retain records in accordance with legal requirements and requirements invoked in the contract documents.

11.3.5 Storage of Records

Prior to records storage, a written storage procedure will be prepared, and responsibility assigned for implementing the requirements of that procedure. (See Appendix A for list of Standard Operting Procedures.) As a minimum, this procedure will include:

(a) A description of the storage facility
(b) The filing system to be used
(c) A method for verifying that the records received are legible and are in agreement with the transmittal document
(d) A method for verifying that the records are those designated
(e) The rules governing access to and control of the files

(f) A method for maintaining control of and accountability for records removed from the storage facility

(g) A method for filing supplemental information and disposing of superseded records

Storage methods will provide for the preservation of records including:

(a) Provisions in the storage arrangement to prevent damage from moisture, temperature, and pressure

(b) Provisions for records to be firmly attached in binders, or placed in folders or envelopes, for storage in steel file cabinets or on shelving in containers

(c) Provisions for special processed records (e.g., photographs, negatives, microfilm, magnetic material, etc.) to prevent damage from excessive light, stacking, electromagnetic fields, temperature, and humidity

11.3.6 Disposition of Records

Records accumulated by Team will be made accessible and transferred to the Navy under terms described in the contractual agreement.

11.4 Release of Documents and Records to Outside Parties

Documents and records shall not be released to parties not directly involved with the affected activities without prior written approval of the Team members through the Program Manager and the Contracting Officer.

11.5 Submittals

The QC Manager shall have responsibility for certifying that all submittals are in compliance with contract requirements. This responsibility extends to assuring that certifications provided by others (e.g. equipment and material vendors or suppliers) are accurate and in compliance with contract requirements also. A program-specific submittal review procedure has been developed and included in Appendix A.

A submittal register (i.e., a listing of all submittals including details of schedule, approving authority, etc.) shall be prepared for each delivery order and shall be included as an attachment to the delivery order QC plan. The submittal register shall be maintained current by the site QC manager in accordance with the specification requirements.

12.0 NONCONFORMANCE AND CORRECTIVE ACTION

12.1 Introduction

Items that do not conform to specified requirements are controlled to prevent inadvertent installation or use. The controls include identification, sampling, documentation, evaluation, segregation, disposition, and notification. Nonconformances may be identified by any project individual by initiating a Nonconformance Report.

12.2 Processing of Nonconformances

Each nonconformance shall be documented on a uniquely identified nonconformance report and initially reviewed, and evaluated by the Quality Control Manager and Project Manager. The evaluation will be augmented by personnel having demonstrated competence in the specific areas they are evaluating and adequate understanding of the requirements and where possible by the group or organization which established the original requirements. If possible, resolution shall be obtained at the project level with notification communicated to the program level. If resolution cannot be obtained, it shall be elevated to the program level for further resolution. The disposition, such as use-as-is, reject, repair, or rework of nonconforming items will be identified and documented. Non-conformances will be logged on the Rework Item List in accordance with Section 9.5.

12.3 Identification

Nonconforming items will be identified by marking, tagging, or other methods which do not adversely effect the end use of the items. The identification shall be legible and easily recognized. If identification of each nonconforming item is not practical, the container, the package, or segregated area, as appropriate, will be identified.

12.4 Segregation

Nonconforming items will be segregated, when practical, by placing them in a clearly identified and designated hold area until properly dispositioned. When segregation is impractical or impossible due to physical conditions, such as size, weight, or access limitation, other precautions (such as tagging) will be taken to prevent inadvertent use of nonconforming item.

12.5 Corrective Action

Controls are established to assure that items and conditions adverse to quality will be promptly and effectively corrected. The underlying causes and the full extent of the potential impacts of unsatisfactory items and conditions will be determined and corrected in order to prevent their recurrence. The adverse conditions, their cause, and the corrective action taken shall be documented and reported to responsible management. The area of concern shall be evaluated, assessed, or audited in a timely manner to assure that the corrective action has been accomplished.

Measures shall be taken to keep appropriate personnel informed of potential problems by a feedback system of reports on significant and recurring problems encountered on other projects and by review of selected government and industry documents.

12.6 Trend Analysis

[Trend analysis if utilized will be identified in Delivery Order QCPs.]

When sufficient data is available from such sources as audit reports, surveillance reports, quality deficiency reports, and related documents, it will be analyzed to identify significant quality trends. Trend analysis will be performed in a manner and at a frequency that assures significant quality trends are identified and evaluated for appropriate corrective and preventive action.

12.7 Responsibilities

The Quality Control Manager shall administer the nonconformance and corrective action systems and shall verify that all nonconformances have been closed and applicable corrective action has been taken.

13.0 AUDITS

13.1 Requirements

A comprehensive system of planned and documented quality audits shall be carried out to verify whether quality activities comply with this QCP and to provide information to assess the effectiveness of this quality system.

Audits are scheduled on the basis of the status and importance of the activity and shall address both performance and compliance issues. Quality assurance audits will be scheduled in a manner to provide coverage and coordination with ongoing activities. Regularly scheduled audits will be supplemented by additional audits of specific subjects when necessary to provide adequate coverage.

Both system and performance audits shall be undertaken:

- System audits evaluate the components of the total quality system, evaluating such items as: procedure preparation and adequacy; audit schedules and plans; tracking of systems for corrective action; and responsibilities of personnel. System audits will generally be performed at least annually with concurrence of the Navy.

- Performance audits evaluate the performance of a quality activity such as onsite data gathering, inspection, M&TE calibration and control, etc. Performance audits will be scheduled as deemed necessary by the program level QC manager. The Navy will be notified of all performance audits and will also receive copies of the audit reports. In general, performance audits will be performed on all projects unless determined impractical as a result of project size, duration, or location.

Audits are performed in accordance with written procedures or checklists by appropriately trained personnel who have no direct responsibility in the activity being looked at. The audit will be performed by one or more auditors and will have an individual appointed to lead the Team who organizes and directs the audit, coordinates the preparation and issuance of the audit report, and evaluates responses.

Objective evidence will be examined to the depth necessary to determine if these elements are being implemented effectively. Audit results will be documented by auditing personnel and will be reviewed by management having responsibility for the area audited, including unsatisfactory and nonconforming conditions for any necessary corrective action. Unsatisfactory areas are reaudited or rereviewed to assure completion of satisfactory corrective action.

Records shall be maintained of all audits and these shall be considered QA Records and controlled accordingly.

13.2 Health and Safety Program

An audit shall be performed annually or once during the life of a project by the OHM program health and safety officer for compliance with the Program Health and Safety Plan.

14.0 PERSONNEL QUALIFICATION AND TRAINING

[Applicable personnel qualification and training requirements will be described in each Delivery Order QCP.]

14.1 Qualification of Personnel

The Team will assure that personnel performing tasks affecting quality have the education, training, and experience commensurate with their job responsibilities. For certain activities personnel may be required to demonstrate proficiency in performance of their assigned work initially and periodically thereafter. Results of performance evaluations will be documented.

Each Department/Division within each Team member organization is responsible for qualification and training of their personnel.

14.2 Training

Training activities will be conducted as required to qualify those personnel performing tasks affecting quality. The extent of the training will be commensurate with the following:

(a) scope, complexity, and nature of the activity
(b) education, experience, and proficiency of the person assigned

Training will include both education in principles and enhancement of skills and practices and will be presented by qualified instructors. Training will include an understanding of the extent and sources of variability in the tools and processes used in the activity. Training will emphasize correct completion of work and provide understanding of the basis of quality requirements. On-the-job training will be included with emphasis on first-hand experience gained through actual performance of duties. Training will be subject to ongoing review to determine program and instruction effectiveness and will be upgraded when needed improvements or other enhancements are identified.

14.3 Indoctrination

Personnel will be indoctrinated in the following subjects as they relate to a particular function:

(a) General criteria, including technical objectives, requirements of the applicable codes and standards, and company procedures
(b) Applicable quality requirements
(c) Job responsibilities and authority

14.4 Maintenance of Job Proficiency

The Team will identify and document the criteria for maintaining and improving job proficiency. Periodic demonstration of proficiency will be included to assure the maintenance of skills. The criteria will be commensurate with job responsibilities and will be derived from or include the following:

(a) Review and study of methods, codes, standards, procedures, and other documents related to the scope of work
(b) Periodic reevaluations of job performance as discussed below
(c) Continuing education or professional certification requirements

Reevaluations will be by evidence of continued satisfactory performance and/or redetermination of capability by evaluation of the employee's education, experience, training, and either test results or capability demonstration. If at any time the capabilities of an employee are not in accordance with the qualifications specified for an activity, that employee will be restricted from that activity until such time as the required capability has been demonstrated.

14.5 Qualification and Training Records

Records of personnel qualification and training will be established and maintained by the Team. These records will include the following information:

(a) Resumes and other evidence of qualifications
(b) Indoctrination and training records
(c) Records of attendance at professionally related classes and seminars, or other continuing education
(d) Evaluations of job performance

14.6 Subcontractors

Subcontractors shall document their programs for qualification and training of their personnel. Adequate documentation shall be maintained to substantiate qualification and training and it shall be fully auditable.

14.7 Delivery Order Training

The Quality Control System Manager and the Project Manager shall determine specific training requirements for each Delivery Order. The QC Manager shall coordinate the presentation of training material and maintain training records, unless previously established under another program (i.e., Health and Safety training records by the Health and Safety Officer).

As a minimum project personnel shall receive training, as applicable, on:

- The Program and Delivery Order Quality Control Plans
- The Project Sampling and Analysis Plan
- The Site Health and Safety Plan

APPENDIX A

A list of Standard Operating Procedures (SOPs) is attached. As applicable, these procedures are utilized in the work activities performed by OHM. For example, QP-010 series procedures provide instructions for document control.

Additionally, several program-specific procedures (listed below) have been prepared to provide program-specific instructions. These procedures may be used as written, or may be modified to incorporate delivery order-specific instructions as needed.

LIST OF PROGRAM-SPECIFIC PROCEDURES

LANTDIV PP-01	Submittal Review
LANTDIV PP-02	As-Built Records
LANTDIV PP-03	Calibration

Title: OHM Standard Operating Procedures Table of Contents

Document #:

Date Issued: April 4, 1995

Rev: 0 **Date:** April 4, 1995

Corporate SOPs

Policy Number	Procedure Number	Title
QP-000		The Framework for Quality
QP-010		Documentation Control
	QP-011	Documentation of Drawings & Specifications
	QP-012	Documenting Policies, Procedures, & Instructions
QP-020		Quality Preplanning
QP-030		Supplier Relationships
QP-040		Receiving Inspection
	QP-041	Receiving Inspection
QP-050		Production Readiness
	QP-051	Production Readiness
QP-060		Continuous Improvement
	QP-062	Statistical Process Control
QP-070		Outgoing Product Control
	QP-071	Final Inspection
QP-080		Material Control
	QP-081	Material Control

Policy Number	Procedure Number	Title
	QP-082	Material Traceability
QP-090		Non-Conforming Material Control
	QP-091	Non-Conforming Material Control
QP-100		Measurement Control
	QP-101	Equipment Calibration
	QP-102	Measurement Variability
QP-110		Quality Auditing
	QP-111	System Audits
	QP-112	Process Audits
	QP-113	Product Audits
	QP-114	Corrective Action Audits
	QP-115	Outside Agency Prep Audits
	QP-116	Client Satisfaction Survey
QP-120		Material Protection
	QP-121	Material Protection
QP-130		Preventive and Corrective Action
	QP-131	Preventive and Corrective Action
	QP-132	Stop Shipment and client Notification
QP-140		Reliability and Qualification
	QP-140	Reliability and Qualification
QP-150		Quality Planning
	QP-151	Quality Planning

Policy Number	Procedure Number	Title
QP-160		Cost of Quality
QP-170		Client Relationships
QP-180		Optimizing Designs and Process
	QP-181	Design Project Responsibilities, Planning and Control
QP-190		Administrative Quality
QP-200		Quality Skills Training and Education
	QP-201	Operator Certification
QP-210		Preventative Maintenance
QP-220		Safety and Quality
Analytical SOPs		
	QP-601	Soil Sampling With Hollow Stem Augers
	QP-602	Decontamination Procedures
	QP-603	Shelby Tube Sampler
	QP-604	Groundwater Sampling
	QP-605	Documentation
	QP-606	Sample Packaging and Shipping
	QP-607	Tank Sampling
	QP-608	Drum Sampling
	QP-609	Surface Soil Sampling
	QP-610	Sample Preservation and Holding Times

Policy Number	Procedure Number	Title
	QP-611	Soil Gas Survey
	QP-612	Photovac IOS 50/55 Operating Procedures
	QP-612.1	Photovac 1OS 50/55 Sample Preparation
	QP-612.2	Photovac 1OS 50/55 Instrument Setup
	QP-612.3	Photovac 1OS 50/55 Calibration Standards
	QP-613	Pile Sampling
	QP-614	Sludge Judge
	QP-615	Bacon Bomb Sampler
	QP-616	Pit and Sump Sampler
	QP-617	Split Spoon Sampler
	QP-618	Bailers
	QP-619	Pond and Lagoon Sampling
	QP-620	PVC Pipe Sampler
	QP-621	Leachate Sampling
	QP-622	Chip Sampling
	QP-623	Ponar Grab Sampler
	QP-624	Gravity Corer
	QP-625	Trier Sampler
	QP-626	Pond/Tank Sampler
	QP-627	Portable Organic Vapor Analyzer

Policy Number	Procedure Number	Title
	QP-628	Augers
	QP-629	Photoionization Detector
	QP-630	Coliwasa Sampler
	QP-631	Concrete Core Sampling
	QP-632	Wipe Sampling
	QP-633	Sludge Scoop Sampler
	QP-634	Steam Sampling
	QP-635	Compur 4100 Monitox
	QP-636	Hand Corer
Engineering SOPs		
	QP-800	Clearing and Grubbing
	QP-805	Pressure Vessels
	QP-810	Drum Disposal
	QP-815	Piping Material
	QP-820	Structural Excavation, Backfill, and Compaction
	QP-825	Fabrication of Process and Utility Piping
	QP-830	Piping Insulation
	QP-835	Cabinets and Enclosures
	QP-840	Power Transformer
	QP-845	Filter Press
	QP-850	Progressing Cavity Pumps

Policy Number	Procedure Number	Title
	QP-855	Thermal Oxidizer Unit
	QP-860	Structural Steel
	QP-865	General Purpose Reciprocating Pumps
	QP-870	Piping Expansion Compensation
	QP-880	Plastic Piping Material and Fabrication
	QP-900	Supports and Anchors
	QP-910	Atmospheric Storage Tanks
	QP-920	Fan/Blower
	QP-930	Controls and Instrumentation
	QP-935	Induction Motors
	QP-940	Electrical Heat Tracing
	QP-942	Emergency Shower and Eyewash Equipment
	QP-955	Excavation, Bedding, and Backfilling
	QP-960	Chain Link Fences and Gates
	QP-962	Signs
	QP-965	Asphalt Concrete Paving
	QP-982	Cast-In-Place Concrete
	QP-986	Painting - Interior
	QP-987	Painting - Exterior
	QP-993	Piping Insulation

Policy Number	Procedure Number	Title
	QP-1000	Transportation and Disposal

APPROVED gram QC Manager Program Manager	OHM REMEDIATION SERVICES CORPORATION a Subsidiary of OHM Corporation LANTDIV - RAC CONTRACT	Effective Date Dec 18, 1995	Number LANTDIV PP-01
		Page 1 of 3	Rev. 0

UBJECT: **PROGRAM PROCEDURE - SUBMITTAL REVIEW**

0 PURPOSE

This procedure defines the requirements and responsibilities during the review of submittals for delivery order specific documents.

.0 SCOPE

This procedure covers the types of submittals and their review, certification, approval and transmittal requirements. Additionally, approving authorities are defined and use of submittal register to track the progress of submittals is described.

.0 DEFINITIONS

Shop drawings: Drawings, schedules, diagrams etc. prepared by the contractor or through the contractor by way of a subcontractor, manufacturer, supplier or distributor to illustrate a portion of the work.

Product Data: Preprinted material such as illustrations, standard schedules, performance charts, instructions, brochures, diagrams, catalog data and other descriptive literature from the manufacturer to illustrate a portion of the work, but not exclusively prepared for this contract.

Samples: Physical examples of products, materials, equipment, assemblies or workmanship that are physically identical to a portion of work or to be used as a model for a piece of work.

Administrative submittals: Data presented for reviews and approval to ensure that the administrative requirements of the project are adequately met. (Does not relate to technical/contractual requirements of the project)

Approved/Approved as Submitted: Submittals marked thus authorize the contractor to proceed with the work covered by the submittals.

Approved as Noted: Submittals marked thus authorize the contractor to proceed with the work as noted provided the contractor takes no exceptions to the notations.

Revise and Resubmit/Disapproved: submittals marked thus indicate that the submittals are incomplete or does not comply with the design concept or the requirements of the contract documents and shall be resubmitted with appropriate changes.

REFERENCE DOCUMENTS

4.1 Program QC plan for LANTDIV RAC Contract N62470-93-D-3032.

4.2 General Requirements of NAVFAC Specifications Division 01, Section 01300 - "Submittals"

4.3 OHM - Standard Operating Procedure (SOP) No. QP-010 - Documentation Control

4.4 OHM - Standard Operating Procedure (SOP) No. QP-011 - Documentation of Drawings and Specifications

.0 PROCEDURE

5.1 Identify the type of submittal

Each of the submittals required for the project is identified and listed in the submittal register of the delivery order specific QC Plan.

The site supervisor, Project Manager or their designee shall identify the type of submittal (e.g. shop drawings, product data, samples, or administrative submittals) and ensure that each submittal is assigned a submittal description (SD) number. Each submittal shall be marked with the project title and location, construction contract number, the corresponding specification section number, and the name, address, and telephone number of the subcontractor/supplier of the submittal. A resubmission shall be identified with an alphabetic suffix (e.g. SD-10A) to indicate the resubmission, and subsequent resubmissions shall continue identification by the next available alphabet suffix.

5.2 Format/Quantity for Submittals

The format for submittals will be based on the type of submittals, and will be appropriate for its intended purpose. For example - shop drawings shall be not less than 8 1/2" x 11" nor more than 30" x 42" or sample panel shall be 4' x 4 '. Multiple types of submittals shall be provided as parts of bound volumes with appropriate identification using table of contents. Applicable specification section number and paragraph number shall be used. The quantity for submittals will be in accordance with the contractual requirements.

5.3 The Schedule for Submittals

The schedule for submittals, as described in the submittal register for the project shall be adhered to, unless otherwise agreed upon between the contractor and the Navy.

5.4 Review/Approval

Prior to the transmittal of submittals to the Navy a review of the submittals shall be performed by the site QC Manager or his designee, except that submittals prior to the mobilization at the site (e.g. preconstruction submittals) shall be approved by the project Manager with concurrence of the Program QC Manager.

When approval of COTR-Navy is required (as indicated on the submittal register), the site QC Manager shall forward the submittal to the Navy and track completion of the process. Submittals requiring revisions shall be returned to the originator and logged and tracked until final approval.

5.5 Certification

The site QC Manager shall certify that submittals are in compliance with contract requirements. This responsibility extends to assuring that certifications provided by others (e.g. equipment and material vendors or suppliers) are accurate and in compliance with contract requirements.

6.0 RESPONSIBILITIES

The Project Manager, Site Supervisor or Technical Designee shall be responsible for the preparation of submittal documents required of the contractor. He shall also coordinate the receipt of subcontractor/supplier generated documents, and shall be responsible for initial screening of documents to determine as to who should review/approve the documents.

The site QC Manager shall coordinate the review of submittals for compliance with contractual requirements. He will forward to the Navy, the submittals requiring COTR-Navy approval and log and track the final approval. For submittals requiring QC approval, he (or his designee) shall perform the review in accordance with the codes/standards and requirements of the specification for the project. He shall also be responsible for the transmittal of these submittals to the Navy as identified in the Submittal Register. He will also provide certification, as required.

The Project Manager shall be responsible for overall coordination of the submittal review process including timely submittal/review/approval of documents. He will also be responsible for identifying any conflicts of contractual nature to the Program Manager to determine the course of settlement.

.0 RECORDS AND PROJECT FILES

Records of receipt/review/approval of submittals shall be kept in project files along with the final approved versions of submittals.

APPROVED Program QC Manager Program Manager	OHM REMEDIATION SERVICES CORPORATION a Subsidiary of OHM Corporation LANTDIV - RAC CONTRACT	Effective Date Dec 18, 1995	Number LANTDIV PP-02
		Page 1 of 3	Rev. 0

SUBJECT: **PROGRAM PROCEDURE - AS-BUILT RECORDS**

1.0 PURPOSE

This procedure provides the necessary direction for the maintenance, approval, and issuance of As-built records for a project.

2.0 SCOPE

This procedure covers As-built records/documents that should be prepared, maintained, approved and issued to the Navy and other parties, as applicable. This procedure is applicable to the project Management Team responsible for these records.

3.0 DEFINITIONS

Document/Record: A written, electronic, and/or photographic form of information about the project being used to communicate the project related details.

Preliminary: An incomplete document, or portion of it, that is still undergoing initial preparation.

Draft/Draft-Final: A complete document that is used only for substantive review of contents.

Final/Contract: The reviewed/completed document that is used for implementation or documentation.

As-built: The ultimate document that reflects the actual constructed configuration of the final document.

Non-conformances: Items not in conformance with the specification requirements. These items require disposition with respect to their acceptability for use by classifying them under "Accept-as-is", "rework or "repair" categories.

Accept-as-is: A non-conforming item that is accepted without any modification.

Rework/Repair: A non-conforming item needing alterations to bring about the item within acceptable range.

4.0 REFERENCE DOCUMENTS

4.1 Program QC plan for LANTDIV RAC contract N62470-93-D-3032.

4.2 General Requirements of NAVFAC Specifications Division 01, Section 01010, Paragraph 1.16 - "As-Built Records."

4.3 OHM - Standard Operating Procedure (SOP) No. QP-011 - Documentation of Drawings and Specifications

4.4 OHM - Standard Operating Procedures (SOPs) Nos. QP-090 - & QP-091 - Non-Conforming Material Control

5.0 PROCEDURE

5.1 Maintain Final/Contract Documents at the Site

The site QC Manager or other project designee shall maintain two sets of full-size contract/final drawings and other documents that will likely be affected by site activities. Preliminary documents shall only be on site until draft or final documents are issued. Draft-Final documents may be kept at the site until final/contract documents are issued. When changes to the planned activities/items/configurations are observed at the site, the site QC Manager or his designee shall record the changes on the final/contract document. Changes recorded on the final/contract documents will bear the date and the identification of the person who recorded them.

In the event when nonconformances are identified, the site supervisor or designee shall process nonconforming materials or documents in accordance with OHM-SOP QP-090 & QP-091 and will revise the necessary documents for accept-as-is condition or to reflect corrective actions such as rework/repair. As-built documents shall be reviewed for completeness by the site QC Manager or designee prior to submittal to the Navy.

5.2 Distribution of As-Built Records

The corrected (As-Built) Records shall be distributed, handled and controlled in the same manner as the original record.

Final As-Built will be distributed after the project completion inspection.

5.3 As-Built Record of Materials

A record of materials used shall be furnished prior to completion of the contract. Where several manufacturers' brands, types or classes of the items have been listed by the specification, a list of items by manufacturers' designation, specification section, type of material and where used shall be prepared, reviewed, approved and distributed, as described above.

6.0 RESPONSIBILITIES

The site supervisor shall be responsible for screening review of changes and for assignment of a verifier for the changes.

The site QC Manager shall be responsible for the maintenance, review, approval and distribution of As-Built records. He will coordinate the distribution to the Navy as required by the submittal register.

The Project Manager shall be responsible for overall coordination of the As-Built Records' maintenance and distribution. Should there be any conflict arising out of this process, the Project Manager will resolve them to the satisfaction of the Navy.

7.0 RECORDS AND PROJECT FILES

Once the distribution is made, copies of transmittal along with As-Built Records shall be kept in project files.

APPROVED gram QC Manager Program Manager	OHM REMEDIATION SERVICES CORPORATION a Subsidiary of OHM Corporation LANTDIV - RAC CONTRACT	Effective Date Dec 18, 1995	Number LANTDIV PP-03
		Page 1 of 2	Rev. 0

SUBJECT: **PROGRAM PROCEDURE - CALIBRATION**

1.0 PURPOSE

This procedure provides instruction for calibration system for the materials and testing equipment (M&TE) being used in engineering, testing and construction activities at the site.

2.0 SCOPE

This procedure establishes the requirements for the control and calibration of the M&TE used in engineering and construction activities at the site. Subcontractors also either are expected to follow this program or have their program (approved by the contractor) implemented as required, to satisfy the National Institute of Standards and Technology (NIST) criteria.

3.0 DEFINITIONS

See OHM SOP QP-100, Measurement Control for definitions.

4.0 REFERENCE DOCUMENTS

4.1 Program QC Plan for LANTDIV RAC Contract N62470-93-D-3032.

4.2 OHM Standard Operating Procedures (SOPs) - Quality Policy QP-100, Measurement Control

4.3 OHM Standard Operating Procedures (SOPs) - Quality Policy QP-101, Equipment Calibration

4.4 OHM Standard Operating Procedures (SOPs) - Quality Policy QP - 102, Measurement Variability

5.0 PROCEDURE

When tools. gauges, instruments and M&TE are used in engineering and construction activities (including all laboratory and field activities) the calibration of such equipment shall be controlled, as follows:

- M&TE and devices that can affect Quality shall be calibrated at prescribed intervals (or prior to use, as applicable) utilizing nationally recognized standards, and applicable procedures.
- Calibration methods, frequency of calibration,acceptance criteria etc., for each equipment to be calibrated, shall be documented and maintained on files.
- In the event that M&TE, is found to be out of calibration, the validity of previous inspection and test results shall be reassessed.

- To minimize M&TE downtime, a systematic program of preventive maintenance shall be in place with preventive and remedial measures recorded and documented, as applicable, in accordance with M&TE manufacturers' written instructions.

6.0 RESPONSIBILITIES

The site supervisor or his designee is responsible for the implementation of this procedure: to determine the applicability of the nationally recognized standards for each M&TE, to determine the method, frequency, and acceptance criteria for each M&TE used at the site and to ensure that the subcontractors also comply with this procedure.

The site QC Manager or his designee is responsible to verify that only calibrated M&TE is used at the site, and that the contractor and subcontractors have documented calibration activities and the test results identify the M&TE being used at the job site.

The Project Manager is responsible for the overall management of the calibration program and will ensure enforcement of the program on subcontractors/subsuppliers, as necessary. In the event that M&TE is found to be out of calibration, the Project Manager shall authorize the reassessment of the validity of previous inspection and test results. He will also initiate the necessary preventative measures for the efficient operation of the M&TE.

7.0 RECORDS AND PROJECT FILES

Records of calibration of various M&TE shall be kept on project files along with Inspection and Test Reports. The Calibration Results Report Form (Ref. Exhibit 2) shall be used to document the results of the calibration of the M&TE.

8.0 ATTACHMENTS

Exhibit 1 - Calibration Label

Exhibit 2 - Calibration Results Report Form

Exhibit #1

CALIBRATION LABEL

Equipment control #

Cal. date by

Due Date Location

Exhibit #2

CALIBRATION RESULTS REPORT

Instrument Control #_____ Description_____

Make_____ Model_____

Calibrated By_____ Date_____

Ref. #	Description of Measurement	Std. Value	Before Adj.	After Adj.	Disp.	Eng. Init.

page___of___

form # qp101-2 rev a

APPENDIX B

This appendix contains a listing and samples of QC forms that should be used for documenting QC activities on a delivery order. If changes are required to these forms, the site QC manager may revise the forms to address site-specific requirements and obtain the concurrence of the program QC manager. While use of these specific forms is not mandatory, any other format used shall, as a minimum, contain the same information.

The following is a listing of typical QC forms to be used on delivery orders:

No.	Title of QC form
1.	Contractor Production Report
2.	Contractor Quality Control Report
3.	Testing Plan and Log
4.	Rework Items List

CONTRACTOR PRODUCTION REPORT

(ATTACH ADDITIONAL SHEETS IF NECESSARY)

DATE

CONTRACT NO. | TITLE AND LOCATION | REPORT NO.

TRACTOR | SUPERINTENDENT

AM WEATHER / PM WEATHER | MAX TEMP: °F / MIN TEMP: °F

WORK PERFORMED TODAY

WORK LOCATION AND DESCRIPTION	EMPLOYER	NUMBER	TRADE	HRS

JOB SAFETY

WAS A JOB SAFETY MEETING HELD THIS DATE? ☐ YES ☐ NO
(IF YES attach copy of the meeting minutes)

WERE THERE ANY LOST TIME ACCIDENTS THIS DATE? ☐ YES ☐ NO
(IF YES attach copy of completed OSHA report)

WAS TRENCHING/SCAFFOLD/HV ELECTRICAL/HIGH WORK DONE? ☐ YES ☐ NO
(IF YES attach statement of checklist shoring inspection performed)

WAS HAZARDOUS MATERIAL/WASTE RELEASED INTO THE ENVIRONMENT? ☐ YES ☐ NO
(IF YES attach description of incident and proposed action)

TOTAL WORK HOURS ON JOB SITE THIS DATE

CUMULATIVE TOTAL OF WORK HOURS FROM PREVIOUS REPORT

TOTAL WORK HOURS FROM START OF CONSTRUCTION

LIST SAFETY ACTIONS TAKEN TODAY/SAFETY INSPECTIONS CONDUCTED

SAFETY REQUIREMENTS HAVE BEEN MET.

EQUIPMENT/MATERIAL RECEIVED TODAY TO BE INCORPORATED IN JOB

CONSTRUCTION AND PLANT EQUIPMENT ON JOB SITE TODAY. INCLUDE NUMBER OF HOURS USED TODAY

REMARKS

CONTRACTOR/SUPERINTENDENT

DATE

FORM 01400-1 6/81

Sheet of

TESTING PLAN AND LOG

TRACT NUMBER	PROJECT TITLE AND LOCATION	CONTRACTOR

CIFICATION SECTION AND RAGRAPH NUMBER	ITEM OF WORK	TEST REQUIRED	ACCREDITED/ APPROVED LAB		SAMPLED BY	TESTED BY	LOCATION OF TEST		FREQUENCY	DATE COMPLETE	DATE FORWARDED TO CONTR. OFF.	REMARKS
			YES	NO			ON SITE	OFF SITE				

REWORK ITEMS LIST

D.O.

ITEM NO.	DATE IDENTIFIED	DESCRIPTION	SPECIFICATION REQUIREMENT	ACTION TAKEN	DATE COMPLETED

OHM/ CONTRACTOR QUALITY CONTROL REPORT D.(Report Page of

No.	QA/QC Inspection Attribute		Phase			Y - Yes N - No (DRE Remarks) blanks not applicable							
			Preparatory	Plans and specs have been reviewed		Submittals approved		Material compliance		Storage satisfactory		Other - Prelim reqt details below	
			Initial	Preliminary work was done correctly		Samples prep. and approved		Workmanship satisfactory		Testing detail below		List test personnel in remarks section	
			Follow-up	Work in compliance with contract		Testing - details below		Testing personnel					

Details of Activity/Remarks

Rework Items Identified today (not corrected by close of business)					Rework Items corrected today (from rework items list)							
		Preparatory	Plans and specs have been reviewed		Submittals approved		Material compliance		Storage satisfactory		Other - Prelim reqt details below	
		Initial	Preliminary work was done correctly		Samples prep. and approved		Workmanship satisfactory		Testing detail below		List test personnel in remarks section	
		Follow-up	Work in compliance with contract		Testing - details below		Testing personnel					

Details of Activity/Remarks

Rework Items Identified today (not corrected by close of business)					Rework Items corrected today (from rework items list)							
		Preparatory	Plans and specs have been reviewed		Submittals approved		Material compliance		Storage satisfactory		Other - Prelim reqt details below	
		Initial	Preliminary work was done correctly		Samples prep. and approved		Workmanship satisfactory		Testing detail below		List test personnel in remarks section	
		Follow-up	Work in compliance with contract		Testing - details below		Testing personnel					

Details of Activity/Remarks

OHM Remediatio. ervices Corporation

Delivery Order 0137
NTC - Bainbridge

Quality Control Plan Review

By signing this document, I am stating that I have read and understand the site Quality Control Plan for this Delivery Order/Project. Any questions or comments should be addressed to either the Program or site QC Manager.

Name (Print)	*Signature*	*Title*	*Company*	*Date*
		QC MANAGER		
		PROJECT MANAGER		
		PROJECT SUPERINTENDENT		
		PROJECT ENGINEER		
		PROJECT GENERAL FOREMAN		
		PROJECT FOREMAN		
		SITE SAFETY OFFICER		

L:\19568\QC\REVIEW.TBL

OHM Remediation Services Corporation

Delivery Order No. 0137

QC Organizational Chart

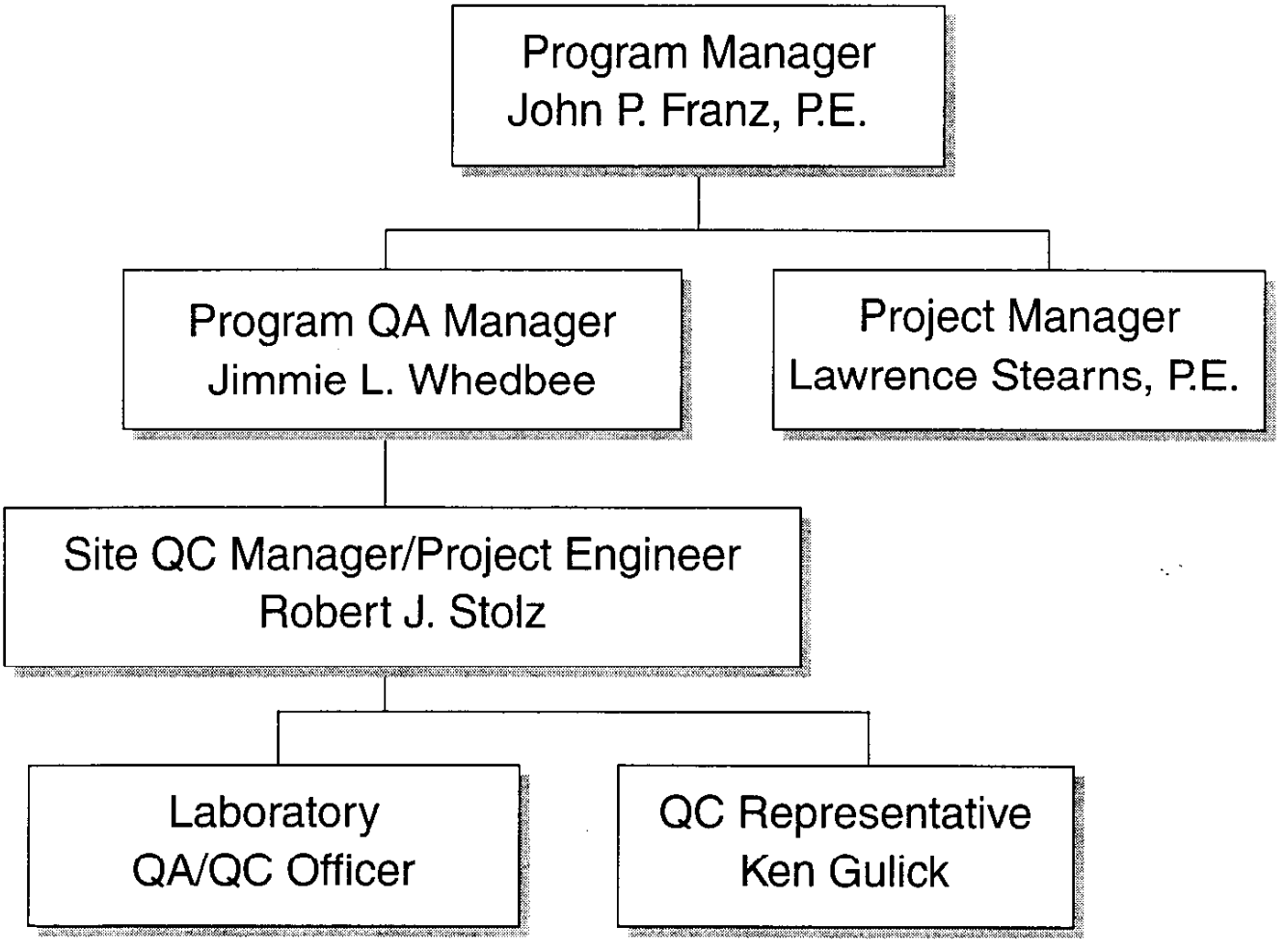

ROBERT J. STOLZ, P.G., E.I.T.

Mr. Stolz joined OHM in 1990 with over 11 years experience in the disciplines of civil engineering and hydrogeology. With his multi-disciplinary background, he has held positions as Project Manager, Project Engineer, and Project Hydrogeologist. He has conducted hydrogeological investigations and site remediation activities for environmental projects throughout the United States. In addition, he has extensive experience in site engineering and geotechnical investigations for numerous public and private sector development projects in New Jersey and New York. He has worked closely with USEPA, USACE, U.S. Navy, U.S. Army, as well as state environmental agencies in New York, New Jersey, Pennsylvania, Connecticut, Massachusetts, and Maryland.

Experience:

Mr. Stolz's environmental experience includes USCOE, DOD, USEPA, ERCS, NJDEP as well as private sector projects in the following areas:

- Site investigations
- Installation of remediation systems
- Solidification/stabilization
- Geotechnical engineering
- Emergency response
- Remediation QA/QC
- UST and AST assessment and closure
- Landfill closures
- Wetland mitigation
- Contaminant removal actions
- Facility assessment, decontamination, and demolition

Mr. Stolz has been directly involved in the following environmental projects:

- Project engineer for the remediation and geosynthetic capping of a dioxin and pentachlorophenol contaminated NPL site in Havertown, Pennsylvania. The project was performed for the USEPA under a USACE Rapid Response delivery order. Provided quality control for road construction, building demolition, utilities installation, waste loadout, UST closure, site grading, and geosynthetic cap construction.

- Project engineer for solidification/stabilization pilot study for oil sludges at a New Jersey oil refinery. Flyash and Portland cement were added to oil sludges using specific ratios determined by OHM Treatability Laboratory. Directed chemical and physical testing of pre-and post-mix sludge samples.

- Project engineer for 50,000 cubic yards of waste consolidation, geosynthetic capping of a 14 acre landfill, and three acres of wetland mitigation at the Naval Training Center in Bainbridge, Maryland. This project was performed under OHM's contract with the U.S. Navy's LANTDIV Division. Mr. Stolz's on-site responsibilities included procurement, technical support, compliance with design specifications, subcontractor supervision, and project documentation.

- Managed a multi-disciplinary ERCS site assessment team performing a detailed evaluation of a five-story process facility at a Virginia NPL site with USEPA oversight. An inventory of the type, condition, and number of process equipment components was required prior to salvage and demolition operations at the site. Assessment required documentation of chemical and physical hazards associated with the facility dismantling.

- Prepared guidance documents for the decontamination, demolition, and disposal of all equipment and infrastructure associated with chemical weapon production facilities located in the United States and in other countries for a contract originating with the U.S. Army Chemical Research, Development and Engineering Center.

Information herein is proprietary and confidential and to be used or released to others only with explicit written permission of OHM Remediation Services Corp

- Managed an Elizabeth, New Jersey ISRA investigation and cleanup with NJDEP oversight involving the following tasks: preparation of remedial investigation reports; closure plans for five USTs; supervision of UST closure operations; oversight of feasibility studies involving use of DVE, bioventing, and air sparging; a geophysical investigation; development of a product recovery system; and the design of a groundwater treatment system (contaminants include No. 2 fuel oil and chlorinated solvents).

- Project engineer for an emergency response at a Massachusetts train derailment where approximately 6,000 gallons of diesel fuel discharged into soils overlying a public water supply recharge area. Over 2,000 cubic yards of diesel fuel-contaminated soil were excavated, with disposal at an asphalt batching plant.

- Project QA/QC engineer for the construction of five acre geosynthetic cap over a RCRA landfill containing F006 hazardous plating waste at a large industrial site in Connecticut. Coordinated geotechnical laboratory testing and borrow pit operations, and directly supervised elements of the earthwork construction while conducting QA/QC testing.

- Managed UST and AST closure projects, prepared Closure Plans and Site Assessment Reports, and conducted complete client and agency liaison for sites throughout the United States. Mr. Stolz is certified to conduct subsurface assessment and operational closure of UST systems in the State of New Jersey.

- Coordinated Hoboken, New Jersey ECRA investigation and remediation activities involving integrity testing of eight USTs, and development of a system for the recovery of No. 6 fuel oil, toluene, naphtha, and No. 4 fuel oil.

- Managed a drilling program for USACE to characterize three landfill areas at a former U.S. Air Force Station in Fortuna, North Dakota. Inspected the closure of approximately 50 USTs and ASTs, including five 50,000 gallon USTs.

- Managed assessment of low permeability soil liners at a diesel fuel tank farm at a major rail yard in East Syracuse, New York. Managed the implementation of secondary containment improvements to the soil liners by means of bentonite mixing for three one-million gallon ASTs.

- Managed a site investigation for the NYSDEC in Staten Island, New York to determine the location of a fuel oil pipeline discharge which resulted in a significant discharge of No. 2 fuel oil into the Kill Van Kull. Installed a floating product recovery system, and conducted a 72-hour pump test.

- Supervised a well installation and groundwater monitoring program to assess the extent of groundwater contamination due to road salt storage at a municipal facility in Morris County, New Jersey.

- Coordinated a preliminary environmental investigation of a contaminated municipal landfill in Passaic County, New Jersey. Excavated test pits, obtained soil and groundwater samples, and directed analytical testing.

- Compiled reports for 15 landfill sites targeted for closure, as part of the New Jersey Turnpike expansion project. Researched engineering and hydrogeological studies, as well as USEPA and NJDEP reports, in preparing detailed case histories, which were submitted to the NJDEP to initiate closure of the landfills.

Mr. Stolz's site and geotechnical engineering experience consists of geotechnical subsurface investigations; inspection and testing for controlled fill placement; foundation design calculations and recommendations; site grading; drainage and sanitary design; utilities; storm routing and hydraulics; roadway design; and computer analyses and modeling. Specific examples of his experience include:

- Trained and supervised a team of engineers for a large-scale geotechnical field investigation during the New Jersey Turnpike expansion project. Project consisted of several hundred soil borings with rock cores and piezometers.

Information herein is proprietary and confidential and to be used or released to others only with explicit written permission of OHM Remediation Services Corp.

- Managed a geotechnical field investigation for a large-scale New Jersey Transit rail terminal/commercial complex in the Secaucus Meadowlands; performed field supervision, report preparation, and pile foundation calculations.
- Designed 120-foot sanitary sewer siphon installed under a river in Union, New Jersey; obtained Sanitary Sewer Extension and Treatment Works Permits from NJDEP.
- Prepared an environmental impact statement for a proposed New York corporate headquarters for a major international insurance company.
- Prepared a third party hydrological evaluation of site plans for a Putnam County, New York municipality to address stormwater management and well production issues for a proposed 300-unit residential development.
- Assisted with a retention basin recharge and groundwater mounding study for a Montville, New Jersey, 300+ unit residential development.
- Supervised geotechnical subsurface investigation for Route 24 extension in Morris County, New Jersey.
- Managed geotechnical and geophysical subsurface investigations throughout New Jersey for JCP&L; provided earthwork and foundation recommendations for proposed substations and substation expansions.
- Managed site engineering projects for Roman Catholic Archdiocese's administration buildings, cemeteries, mausoleums, and roadways.
- Managed site engineering consisting of parking and roadway improvements at corporate offices in Parsippany, New Jersey for an international chemical manufacturer.
- Performed site engineering for 15-acre, 500,000 square foot retail/office complex in Bedminster, New Jersey.
- Performed a retention basin sedimentation study for a large-scale corporate complexto determine source of sediment accumulating in the retention basin.

Academic Background

M.S. 1997, Civil Engineering Candidate, Drexel University, Philadelphia, PA
M.S. 1996, Engineering Geology Candidate, Drexel University, Philadelphia, PA
B.A. 1984, Geological Sciences, Rutgers College, Emphasis: Geophysics/Geochemistry/Civil Engineering

Specialized Training

OSHA Forty-Hour Health and Safety Training, 5/18/90
OSHA Eight-Hour Refresher Training, Annually
OSHA Eight-Hour Supervisory Training, 8/30/91
Geosynthetics Research Institute Design Seminar, 1995
New Jersey Soil Erosion Control Course
NJDEP Underground Storage Tank Closure Seminars
USEPA Seminar: Design and Construction of RCRA/CERCLA Final Landfill Covers
New Jersey Regulatory Compliance Seminar
AMA Forty-Hour Project Management Training Seminar

Information herein is proprietary and confidential and to be used or released to others only with explicit written permission of OHM Remediation Services Corp.

Professional Registrations & Licenses

Engineer-in-Training, New Jersey
Professional Geologist, Pennsylvania
NJDEP Underground Storage Tank Subsurface Investigation License
NJDEP Underground Storage Tank Closure License

Professional Certifications & Affiliations

Troxler Nuclear Test Instrument Certification

References

Frank Zepka
Remediation Manager
U.S. Navy LANTDIV
202 685 3279

Gregory Ham
Remedial Project Manager
USEPA Region III
215-566-3194

Greg Wagner
Wally Shaheen
USACE - Omaha District
402-293-2517

Redding Thompson
Olin Corporation
203-356-2732

Information herein is proprietary and confidential and to be used or released to others only with explicit written permission of OHM Remediation Services Corp.

Exhibit 2.4

February 4, 1997

Robert J. Stolz
OHM Remediation Services Corporation
200 Horizon Center Blvd.
Trenton, NJ 08691

RE: Site QC Manager
Facility Cleanup, NTC-Bainbridge, Port Deposit, MD
Contract N62470-93-D-3032
Delivery Order 0137

Dear Mr. Stolz:

This letter will serve as your appointment as the Site Quality Control Manager on the referenced project and will also clarify your duties and authority in this position. In this position, you will be authorized to use available resources to satisfy all applicable requirements of the Program and Delivery Order Quality Control Plans.

This authorization specifically gives you the authority to direct removal and replacement or correction of nonconforming materials or work and stop work authority when continuation would be unsafe to personnel, harmful to the environment, or result in a significant degradation of quality.

You will be expected to work closely with the Project Manager, Site Supervisor and other project personnel, but you will not be directly responsible to anyone but myself for resolution of quality issues when working in the capacity of Quality Control Manager.

If you have any question in this matter, please call me at (617) 589-2306

Sincerely,

Jimmie L.Whedbee
Program QC Manager
LANTDIV RAC Program

SUBMITTAL DESCRIPTIONS

SD-01, Data

Submittals that provide calculations, descriptions, descriptions, or other documentation regarding the work.

SD-02, Manufacturer's Catalog Data

Data composed of catalog cuts, brochures, circulars, specifications and product data, printed information in sufficient detail and scope to verify compliance with requirements of the contract documents. A type of product data.

SD-03, Manufacturer's Standard Color Charts

Preprinted illustrations displaying choices of color and finish for a material or product. A type of product data.

SD-04, Drawings

Submittals that graphically show relationship of various components of the work, schematic diagrams of systems detail of fabrications, layout of particular elements, connections, and other relational aspects of the work. A type so shop drawing.

SD-05, Design Data

Design calculations, mix design, analyses, or other data written in nature and pertaining to a part of the work. A type of shop drawings.

SD-06, Instructions

Preprinted material describing installation of a product, system, or material, including special notices and Material Safety Data Sheets, if any, concerning impedances, hazards, and safety precautions. A type of product data.

SD-07, Schedules

A tabular list of data or tabular list including location, features, or other pertinent information regarding products, materials, equipment, or components to be used in the work. A type of shop drawing

SD-08, Statements

A document, required of the Contractor, or through the Contractor by way of a supplier, installer, manufacturer, or other lower tier contractor, the purpose of which is to further the quality or orderly progression of a portion of the work by documenting procedures, acceptability of method or personnel, qualifications, or other verification of quality. A type of shop drawing.

SD-09, Reports

Reports of inspection and laboratory test, including analysis and interpretation of test results. Each report shall be properly identified. Test method used and compliance with recognized test standards shall be described.

SD-10, Test Reports

A report signed by an authorized official of a testing laboratory that a material, product, or system identical to the material, product or system to be provided has been tested in accordance with requirements specified by naming the test method and material. The test report must state the test was performed in accordance with the test requirements; state the test results; and indicate whether the material, product, or system has passed or failed the test. Testing must have been within three years of the date of Contract award. A type of product data.

SD-11, Factory Test Reports

A written report that includes the findings of a test required to be performed by the Contractor on an actual portion of the work or prototype prepared for this project before it is shipped to the job site. The report must be signed by an authorized official of a testing laboratory and must state the test was performed in accordance with the test requirements; state the test results; and indicate whether the material, product, or system has passed or failed the test. A type of shop drawing.

SD-12, Field Test Reports

A written report that includes the findings of a test made at the job site, in the vicinity of the job site, or on a sample taken from the job site, on a portion of the work, during or after installation. The report must be signed by an authorized official of a testing laboratory or agency and must state the test was performed in accordance with the test requirements; state the test results; and indicate whether the material, product, or system has passed or failed the test. A type of shop drawing.

SD-13, Certificates

Statements signed by responsible officials of a manufacturer of a product, system, or material attesting that the product, system, or material meet specified requirements. The statements must be dated after the award of this contract, name the project, and list the specific requirements that it is intended to address. A type of shop drawing.

SD-14, Samples

Samples, including both fabricated and unfabricated physical examples of materials, products, and units of work as complete units or as portions of units of work. A type of sample.

SD-15, Color Selection Samples

Samples of the available choice of colors, textures, and finishes of a product or material, presented over substrates identical in texture to that proposed for the work. A type of sample.

SD-16, Sample Panels

An assembly constructed at the product site in a location acceptable to the Contracting Officer and using materials and methods to be employed in the work; completely finished; maintained during construction; and removed at the conclusion of the work or when authorized by the Contracting Officer. A type of sample.

SD-17, Sample Installations

A portion of an assembly or material constructed where directed and, if approved, retained as a part of the work. A type of sample.

SD-18, Records

Documentation to ensure compliance with an administrative requirement or to establish and administrative mechanism. A type of administrative and close-out submittal,

SD-19, Operation and Maintenance Manuals

Data intended to be incorporated in an operations and maintenance manual. A type of administrative and close-out submittal.

Exhibit 3.2

List of Personnel Authorized to Review and Certify Submittals

Specification Section:	Submittal Type:	Authorizes Personnel:

Exhibit 5.1

TESTING PLAN AND LOG

Contract Number			Project Title and Location							Contractor	
Specification Section and Paragraph Number	Item of Work	Test Required	Accredited/ Approved Lab		Sampled By	Tested By	Location of Test		Date Completed	Date Forwarded to Contr. Off.	Remarks
			Yes	No			On Site	Off Site			

Exhibit 6.1

REWORK ITEMS LIST

Contract No. and Title: _____

Contractor: _____

Number	Date Identified	Description	Contract Requirement (Spec. Section and Par. No., Drawing No. And Detail No., etc.)	Action Taken by QC Manager	Resolution	Date Completed

SAMPLE DOCUMENT

COORDINATION AND MUTUAL UNDERSTANDING MEETING AGENDA
FOR
DELIVERY ORDER No. _____
_____ AT THE
U.S. NAVAL STATION,

_____
____ __, 1996

The purpose of this meeting is to develop a mutual understanding of the QC details, including forms to be used; administration of on-site and off-site work, and coordination of the Contractor's management, production and the QC Manager's duties with the Contracting Officer.

The QC program consists of a QC Organization, QC Manager, a QC Plan for this Delivery Order, this Coordination and Mutual Understanding Meeting, QC meetings, three phases of control, submittal review, submittal approval except for submittals designated for Contracting Officer approval, testing, and QC certifications and documentation necessary to provide materials, equipment, workmanship, fabrication, construction and operations which comply with requirements of this contract.

Project QC Manager duties (contract para. 6.6.1)

- Attend this meeting
- Conduct the QC Meetings
- Perform the three phases of control
- Perform submittal review
- Perform submittal approval
- Ensure testing is performed
- Prepare QC certifications and documentation
- Perform other activities when approved by the Contracting Officer

SAMPLE DOCUMENT

Submittal Reviewers Duties and Qualifications (contract para. 6.7)

- Provide submittal reviewers qualified in the disciplines being reviewed other than the QC Manager, to review and certify that the submittals meet the requirements of the contract.

QC Plan (contract para. 6.8)

- (as specified therein)

Coordination and Mutual Understanding Meeting (contract para. 6.9)

- (see purpose above)

QC meetings (contract para. 6.10)

- The QC Manager shall conduct QC meetings once every two weeks or as otherwise directed by the Contracting Officer.
- Meeting minutes to be prepared by the QC Manager in accordance with the contract outline and a copy provided to the Contracting Officer within two working days of the meeting.
- A copy will be distributed to the Program QC Manager.

Three phases of control (contract para. 6.11)

- Preparatory Phase Meeting
- Initial Phase Meeting
- Follow-Up Phase Inspection

Submittal review and approval (contract para. 6.12 and Part 7.0, "Submittals")

- Review
- Approval
- Certification
- Submittal Register

SAMPLE DOCUMENT

Testing (contract para. 6.13)

- Testing Laboratory Requirements
- Accredited Laboratories
- Inspection and Testing Laboratories
- Capability Checks
- Test Results

QC certifications (contract para. 6.14)

- Contractor Quality Control Report Certification
- Invoice Certification
- Completion certification

Documentation (contract para. 6.15)

- Contractor Production Report
- Contractor Quality Control Report
- Testing Plan and Log
- Rework Items List
- As-Built Records
- Report Forms

    1. Contractor Production Report
    2. Contractor Quality Control Report
    3. Testing Plan and Log
    4. Rework Items List

Exhibit 9.1

Definable Features of Work

WBS No.:	Definable Feature of Work:
0100100	Mobilization
0100400	Site Setup
1000000	Bldg. Drum Removal
1000200	Bldg. 760 Waste Removal
1000300	Transformer Removals
1000100	Waste and Debris Removal
0200420	Well Abandonments
1900200	Transportation and Disposal
2100100	Removal of Temporary Facilities
2100400	Demobilization
9900100	Supervision and Management
9900400	Engineering (Search/Documentation)

APPENDIX E
HEALTH AND SAFETY PLAN

HEALTH AND SAFETY PLAN
FOR
SITE CLEANUP ACTIVITIES
NAVAL TRAINING CENTER (NTC)
BAINBRIDGE, MARYLAND

Prepared for:

DEPARTMENT OF THE NAVY
Contract No. N62470-93-D-3032
Delivery Order 0137

Prepared by:

OHM Remediation Services Corp.
Trenton, New Jersey

Paul A. Lawless, CIH
Regional Industrial Hygienist

Robert A. Brooks, CSP
Health and Safety Manager

Reviewed by:

Lawrence J. Stearns, P.E.
Senior Project Manager

Kevin J. McMahon, M.S., CIH
Health and Safety
Director/Program CIH

John P. Franz, P.E.
Program Manager

February 12, 1997
OHM Project 19568HS

OHM Remediation Services Corp.
A Subsidiary of OHM Corporation

TABLE OF CONTENTS

1.0 INTRODUCTION 1-1

1.1 SITE HISTORY 1-1
1.2 SCOPE OF WORK 1-1

FIGURE 1.1 SITE MAP 1-2

2.0 KEY PERSONNEL AND MANAGEMENT 2-1

2.1 PROJECT MANAGER (PM) 2-1
2.2 SITE SUPERVISOR (SS) 2-1
2.3 SITE SAFETY OFFICER (SSO) 2-1
2.4 HEALTH AND SAFETY MANAGER (HSM) 2-2
2.5 PROGRAM CERTIFIED INDUSTRIAL HYGIENIST (CIH) 2-2
2.6 EMPLOYEE SAFETY RESPONSIBILITY 2-2
2.7 KEY SAFETY PERSONNEL 2-3

FIGURE 2.1 HEALTH AND SAFETY ORGANIZATION 2-4

3.0 JOB HAZARD ANALYSIS 3-1

3.1 CHEMICAL HAZARDS 3-1
3.2 PHYSICAL HAZARDS 3-2
3.3 ENVIRONMENTAL HAZARDS 3-2

FIGURE 3.1 POISONOUS PLANTS 3-5

3.4 TASK-SPECIFIC AND HEALTH RISK ANALYSIS 3-7
3.5 ACCIDENT PREVENTION 3-21

4.0 WORK AND SUPPORT AREAS 4-1

4.1 EXCLUSION ZONE 4-1
4.2 CONTAMINATION-REDUCTION ZONE 4-1
4.3 SUPPORT ZONE 4-1
4.4 SITE CONTROL LOG 4-1
4.5 GENERAL 4-1

5.0 PROTECTIVE EQUIPMENT 5-1

5.1 ANTICIPATED PROTECTION LEVELS 5-1
5.2 PROTECTION LEVEL DESCRIPTIONS 5-1
5.3 SUPPLIED-AIR RESPIRATORS 5-2
5.4 BREATHING-AIR QUALITY 5-2
5.5 AIR-PURIFYING RESPIRATORS 5-2
5.6 RESPIRATOR CARTRIDGES 5-3
5.7 CARTRIDGE CHANGES 5-3
5.8 INSPECTION AND CLEANING 5-3
5.9 FIT TESTING 5-3
5.10 FACIAL HAIR 5-3
5.11 CORRECTIVE LENSES 5-3
5.12 CONTACT LENSES 5-3
5.13 MEDICAL CERTIFICATION 5-3
5.14 SITE-SPECIFIC PERSONAL PROTECTIVE EQUIPMENT (PPE) PROGRAM 5-4

TABLE OF CONTENTS (CONTINUATION)

6.0 DECONTAMINATION PROCEDURES 6-1

6.1 PERSONNEL DECONTAMINATION 6-1
6.2 EQUIPMENT DECONTAMINATION 6-2
6.3 DISPOSAL 6-2

7.0 AIR MONITORING 7-1

7.1 LOWER EXPLOSIVE LIMIT/OXYGEN (LEL/O_2) METER 7-1
7.2 PHOTOIONIZATION DETECTOR (PID) 7-2
7.3 AIR MONITORING LOG 7-3
7.4 CALIBRATION REQUIREMENTS 7-4
7.5 AIR MONITORING RESULTS 7-4

8.0 EMERGENCY RESPONSE 8-1

8.1 PRE-EMERGENCY PLANNING 8-1
8.2 EMERGENCY RECOGNITION AND PREVENTION 8-2

TABLE 8.1 EMERGENCY TELEPHONE NUMBERS 8-3

8.3 PERSONNEL, ROLES, LINES OF AUTHORITY, AND COMMUNICATIONS 8-3
8.4 SAFE DISTANCES AND PLACES OF REFUGE 8-5
8.5 EVACUATION ROUTES AND PROCEDURES 8-6
8.6 EMERGENCY SPILL AND RESPONSE PROCEDURES AND EQUIPMENT 8-7
8.7 EMERGENCY CONTINGENCY PLANS 8-10
8.8 MEDICAL EMERGENCY PROCEDURES 8-10
8.9 FIRE CONTINGENCY MEASURES 8-12
8.10 HAZARDOUS WEATHER CONTINGENCY MEASURES 8-13
8.11 SPILL/RELEASE CONTINGENCY MEASURES 8-13

9.0 TRAINING REQUIREMENTS 9-1

9.1 SITE ORIENTATION 9-1

10.0 MEDICAL SURVEILLANCE PROGRAM 10-1

TABLE 10.1 WORKER MEDICAL PROFILES 10-1

10.1 EXAMINATION SCHEDULE 10-1

APPENDICES
APPENDIX A HEALTH AND SAFETY PLAN CERTIFICATION
APPENDIX B OHM HAZARD COMMUNICATION PROGRAM
APPENDIX C MATERIAL SAFETY DATA SHEETS
APPENDIX D SITE-SPECIFIC PERSONAL PROTECTIVE EQUIPMENT (PPE) PROGRAM

1.0 INTRODUCTION

This Health and Safety Plan (HASP) has been developed for United States Navy, LANTDIV, Delivery Order entitled, Site Cleanup Activities, Naval Training Center (NTC), Bainbridge, Maryland. The Delivery Order will be executed per the requirements stated in the Final Statement of Work (SOW) for Service Delivery Order per Contract No. N62470-93-D-3032, Delivery Order 137, in cooperation with the Navy. This Delivery Order will also be executed in accordance with Naval Facilities Engineering Command (NAVFAC).

This HASP documents the policies and procedures which protect workers and the public from potential hazards posed by work at this site and is a key component in the ***OHM Safety Improvement Process***. OHM considers safety the highest priority during work at a site containing potentially hazardous materials and has established a goal of **zero accidents** for all projects. All projects will be conducted in a manner which minimizes the probability of injury, accident, or incident occurrence. This HASP is a key element in the proper planning of project work which is necessary to assure the goal of **zero accidents** is achieved. The HASP Acknowledgment (Appendix A) will be signed by all who actively participate at this project.

Although the plan focuses on the specific work activities planned for this site, it must remain flexible because of the nature of this work. Conditions may change and unforeseen situations may arise that require deviations from the original plan. This flexibility allows modification by the OHM supervisors and health and safety officials with approval from the project CIH.

1.1 SITE HISTORY

The Naval Training Center, Bainbridge, Maryland (NTC-B) ceased Naval training operations in 1976. During the late 1980s, part of the installation was used as a federal Job Corps Site. During 1994-95, the RAC Contractor conducted environmental remedial actions at two sites on the installation: capping the old landfill, and restoration of the Fire Training Area. At this time, the NTC-B property is vacant and idle, awaiting transfer to the State of Maryland. An Environmental Baseline Survey (EBS), is being conducted to facilitate the transfer process. As part of the EBS process, containers from various industrial/housekeeping products have been identified as improperly discarded or abandoned at NTC-B. This Remedial activity is intended to remove these items for proper identification, sampling, as required, and off-site disposal.

1.2 SCOPE OF WORK

The principal tasks to be conducted are listed below.

- Mobilization, site setup
- Locate, confirm ID, of discarded, abandoned items
- Sampling of containers, as required
- Staging, segregating items for disposal
- Off-site Transportation and Disposal
- Demobilization

These activities have been analyzed for potential hazards for which control measures are provided in Section 3.4 Job Safety Analysis.

This HASP has been prepared for the above scope of work. Any changes to the scope of work will require amendment of the plan to remain approved.

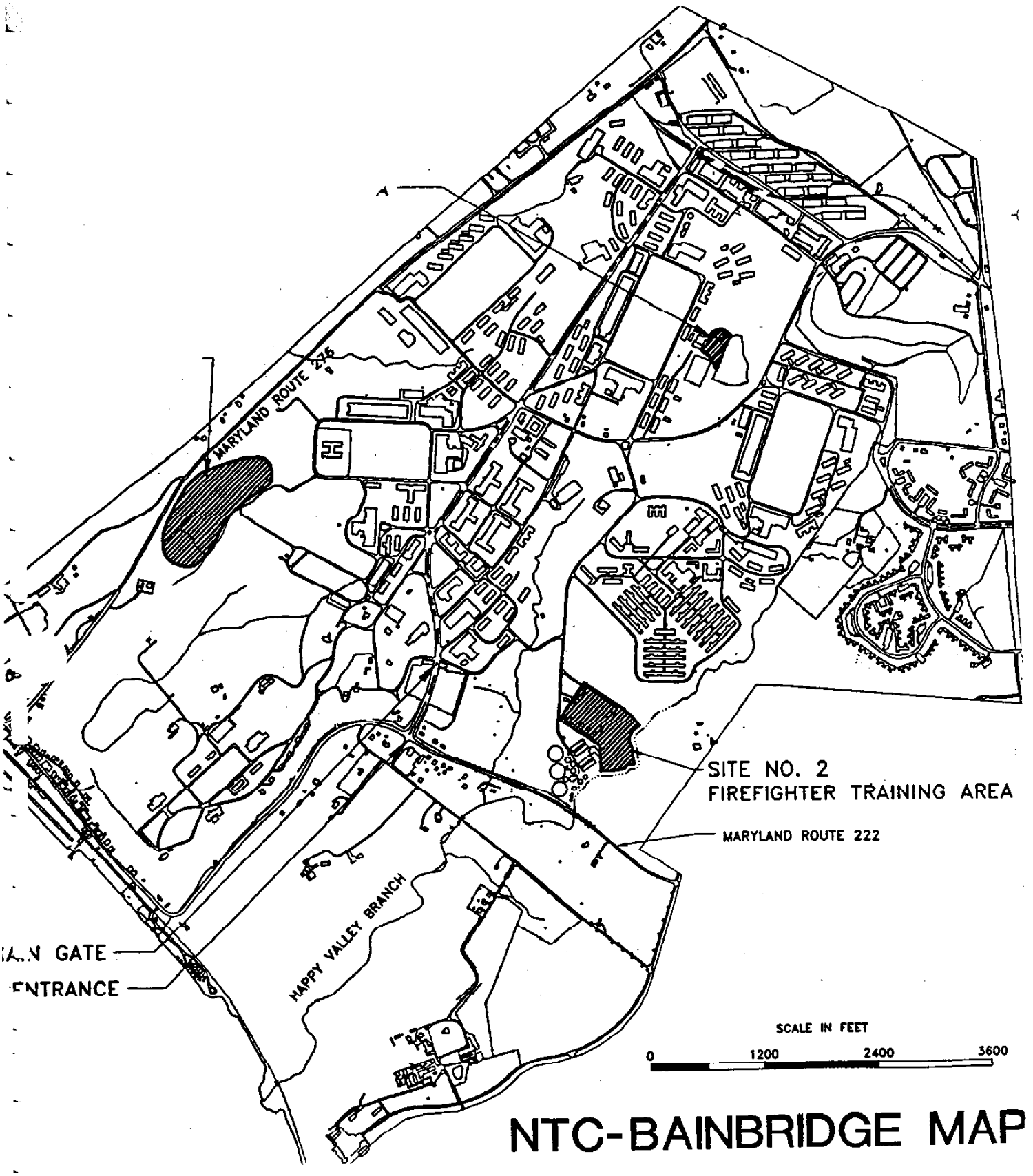

NTC-BAINBRIDGE MAP

2.0 KEY PERSONNEL AND MANAGEMENT

The Project Manager (PM), Site Supervisor (SS), Certified Industrial Hygienist (CIH) Health and Safety Manager (HSM) and Site Safety Officer (SSO) are responsible for formulating and enforcing health and safety requirements, and implementing the HASP. Reporting relationships are shown in Figure 2.1

2.1 PROJECT MANAGER (PM)

The PM has the overall responsibility for the project and to assure that the goals of the construction remedial action are attained in a manner consistent with the HASP requirements. The PM will coordinate with the SS and the SSO to assure that the remedial action goals are completed in a manner consistent with the HASP. The PM will conduct a monthly health and safety audit of the project using the Management Safety Improvement Report Form. Specific Key Requirement Areas (KRAs) for safety performance include:

- Implement Site Specific Safety Awareness/ Recognition program
- Conduct periodic site audits of project (Management Safety Improvement Report; 1 report within 30 days of mobilization; 1 report within 60 of mobilization)
- Implement Safety Improvement Team
- Investigate and report findings for any OSHA recordable cases; assure corrective actions are taken

2.2 SITE SUPERVISOR (SS)

The SS is responsible for field implementation of the HASP. The SS will be the main contact in any on-site emergency situation and will insure off-site emergency agencies have been contacted prior to the start of work. The SS will act as the SSO when the assigned SSO is not on the project site. The SS will conduct periodic inspections (at least weekly) of the work site to confirm compliance with all health and safety requirements. The Project Safety Improvement Checklist shall be used to document inspections. The SS is also responsible for coordinating remedial actions for all deficiencies and for enforcing the OHM "Cardinal Safety Rules." Specific KRAs for safety performance include:

- Complete Site-Specific Job Safety Analyses for all principle tasks
- Implement Site Specific Safety Awareness/ Recognition program
- Conduct weekly safety inspections of the job site
- Implement Safety Improvement Team
- Correct all deficiencies as noted on Management Safety Improvement Reports and safety department audits, within recommended time frames
- Investigate and report findings for OSHA recordable cases; assure corrective actions are taken

2.3 SITE SAFETY OFFICER (SSO)

The SSO has responsibility for administering the HASP relative to site activities, and will be in the field full-time while site activities are in progress. The SSO's primary operational responsibilities include personal and environmental monitoring, coordination of job safety analyses, selection and care of personal protective equipment, assignment of protection levels and review of work permits. The SSO will monitor all field activities involved with safety and is authorized to stop work when an imminent health or safety risk exists. The SSO is responsible for informing all on-site personnel of essential safety requirements and facilitating the daily safety meetings. Specific KRAs for SSO performance include:

- Monitor workers for signs of stress, such as cold exposure, heat stress, and fatigue
- Reevaluate site conditions on an on-going basis. Coordinate protective measures including engineering controls, work practices and personal protective equipment
- Assist the SS in the preparation, presentation and documentation of daily safety meetings
- Conduct and prepare reports of daily safety inspections of work processes, site conditions, equipment conditions and submit to SS. Discuss any necessary corrective actions with the SS and review new procedures
- Initiate revisions of the HASP as necessary for new tasks or modifications of existing operations and submit to the Program CIH for approval
- Perform air monitoring as required
- Assist the PM and SS in accident investigations
- Prepare permits for special operations, e.g., hot work, confined spaces, line breaking, etc.
- Maintain site safety records
- Conduct weekly inspections of all fire extinguishers, supplied air respirators, first-aid kits, and eye washes/emergency showers
- Inform subcontractors of the elements of the HASP/contractor pre-job checklist
- Coordinate the preparation of Site Specific Job Safety Analyses with the SS, team leader, and work crew
- Coordinate the daily Safety Observer Program
- Coordinate the Site Specific Safety and Health Awareness and Recognition Program (SHARP) with Project Manager and Supervisor

2.4 HEALTH AND SAFETY MANAGER (HSM)

The HSM is responsible for staffing health and safety personnel and monitoring projects for compliance with regulatory and OHM health and safety policies and procedures. This position reports to the Region Health and Safety Director and will visit the site periodically to ensure compliance with this HASP.

2.5 PROGRAM CERTIFIED INDUSTRIAL HYGIENIST (CIH)

The Program CIH is responsible for overseeing development of the HASP and ensures that the HASP complies with all federal, state and local health and safety requirements. The Program CIH provides technical and administrative support for the LANTDIV Health and Safety Program. If necessary, the CIH can modify specific aspects of the HASP to adjust for on-site changes that affect safety. The CIH will coordinate with the HSM and SSO on all modifications to the HASP and will be available for consultation when required. The CIH will not necessarily be on site during OHM activities but may make periodic site visits to determine compliance. The CIH reports to the Regional Vice President/General Manager.

2.6 EMPLOYEE SAFETY RESPONSIBILITY

Each employee is responsible for personal safety as well as the safety of others in the area. The employee will use all equipment provided in a safe and responsible manner as directed by the SS. All OHM personnel will follow the policies set forth in the OHM Health and Safety Procedures Manual, with particular emphasis on the OHM "Cardinal Safety Rules." Employees that knowingly disregard safety policies/procedures may be subject to disciplinary actions.

2.7 KEY SAFETY PERSONNEL

The following individuals share responsibility for health and safety at the site:

Project Manager	Lawrence J. Stearns, P.E. 412-963-2300 ext 3229 (office)
POC/ Engineer in Charge	Frank Zepka 202-685-3279
Site Supervisor	Fred Poulin TBD (Site phone)
Site Safety Officer	Darryl Mike, ASP 800-503-0524 (pager) TBD (Site phone)
Deputy Program Manager for LANTDIV	David Leadenham 609-588-6370 (office)
Program Manager for LANTDIV	John P. Franz, P.E. 609-588-6477 (office)
Health and Safety Manager	Robert A. Brooks, CSP 609-588-6423 (office) 800-818-2185 (pager)
Northeast Region Health and Safety Director/Program CIH	Kevin McMahon, M.S., CIH 609-588-6375 (office) 609-421-7523 (pager)
Vice President, Health and Safety	Fred Halvorsen, Ph.D., PE, CIH 800-231-7031

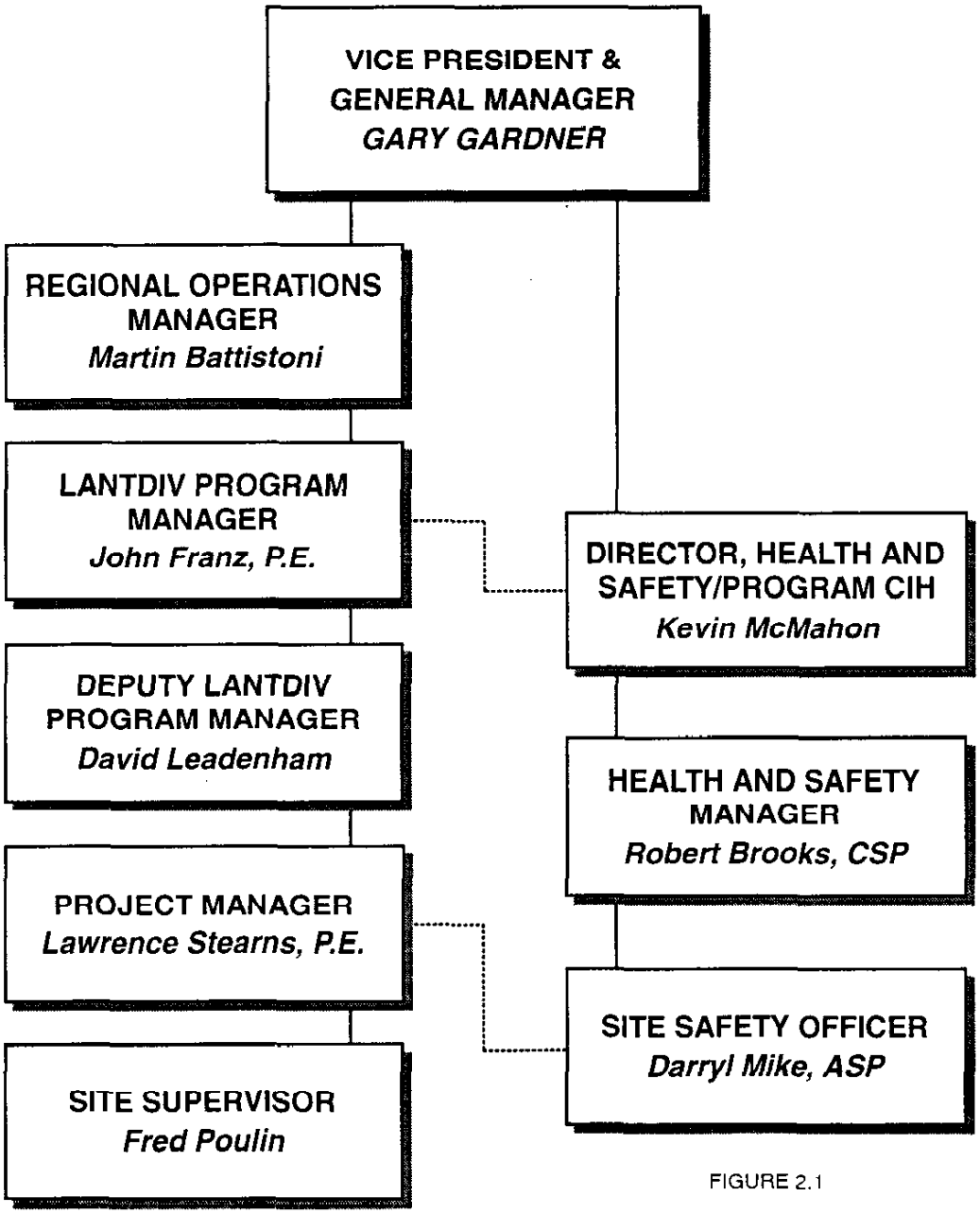

FIGURE 2.1

HEALTH & SAFETY ORGANIZATION
Remedial Action
Site Cleanup Activities
Naval Training Center
Bainbridge, Maryland
Delivery Order 0014
OHM Project 19568

Prepared for

DEPARTMENT OF THE NAVY
ATLANTIC DIVISION
NAVAL FACILITIES ENGINEERING COMMAND
NORFOLK, VIRGINIA

3.0 JOB SAFETY ANALYSIS

This section outlines the potential chemical and physical hazards which workers may be exposed to during work on this project. Table 3.1 lists significant contaminants identified at the site. An MSDS list is included in Appendix C.

3.1 CHEMICAL HAZARDS

The primary routes of exposure for petroleum hydrocarbons, sodium hypochlorite and toluene is inhalation and skin contact. The primary route of exposure for PCB liquids is skin contact. Inhalation of ammonium phosphate can irritate the respiratory system and eyes. HALON 1211 is an inert chloro-floro carbon gas. Its build-up in poorly ventilated areas can contribute to oxygen deficiency and possible asphyxiation.

Exposure to PCBs is likely during the handling, sampling and transfer of transformer fluids. Toluene exposure is likely during the handling, sampling and transfer of paint containers that contain liquids. Exposure to sodium hypochlorite is likely during the drum pump and transfer activities. Exposure to HALON 1211 and ammonium phosphate is likely during the handling and staging of fire extinguishers. Exposure to petroleum hydrocarbons is likely during the excavation and staging of contaminated soils.

CHEMICAL	EXPOSURE ROUTES	PEL/TLV	HEALTH HAZARDS/ PHYSICAL HAZARDS
Ammonium Phosphate	Skin, eye, inhalation, ingestion	N/A	A skin, eye, respiratory tract irritant
			Reacts with sodium perchlorate; thermal decomposition emits toxic fumes, PO-, NO-, NH3
HALON 1211	Skin, eye, inhalation, ingestion	N/A	A non-flammable gas (chloro-floro carbon); a simple asphixant; dizziness, unconsciousness, cardiac arrhythmia, cardic arrest
			Reacts with chemically-reactive metals metals, sodium, potassium, aluminum, zinc, calcium, magnesium; thermal decomposition emits highly toxic gases Br, Cl, F
Petroleum Hydrocarbons	Skin, eye, inhalation, ingestion	5 mg/m^3 (mineral oil mist)	Irritating to skin, eyes, respiratory tract; headache, dizziness, nausea, vomiting and loss of coordination; an acne like rash, pimples around hair follicles; some petroleum hydrocarbons may be carcinogens
			Incompatible with strong oxidizing agents; thermal decomposition releases, toxic gases
Polychlorinated Biphenyls	Skin, eye, inhalation, ingestion	0.5 mg/m^3	Irritation of eyes, skin; acne-form dermatitis; potential carcinogen; liver damage
			Reacts with strong oxidizers

CHEMICAL	EXPOSURE ROUTES	PEL/TLV	HEALTH HAZARDS/ PHYSICAL HAZARDS
Sodium Hypochlorite	Skin, eye, inhalation, ingestion	N/E	A corrosive irritant, to skin, eyes, respiratory tract
			A bleaching agent, forms explosive compounds in reaction with amines, formic acid and phenylazcetonitrile; decomposition emits Cl-, and Na2O
Toluene	Skin, eye, inhalation, ingestion	50 ppm SKIN	Fatigue, weakness, confusion, euphoria, dizziness, headache, dilated pupils, insomnia, numbness/tingling in hands, feet, dermatitis
			Reacts with strong oxidizers; flammable liquid; releases toxic gases during combustion

The following general symptoms may indicate exposure to a hazardous material. Personnel will be removed from the work site and provided proper medical attention immediately if the following symptoms occur:

- Dizziness or stupor
- Nausea, headaches, or cramps
- Irritation of the eyes, nose, or throat
- Euphoria
- Chest pains and coughing
- Rashes or burns

3.2 PHYSICAL HAZARDS

To minimize physical hazards, OHM has developed standard safety protocols which will be followed at all times. Failure to follow safety protocols will result in expulsion of an employee from the site and appropriate disciplinary actions.

The SS and SSO will observe the general work practices of each crew member and equipment operator, and enforce safe procedures to minimize physical hazards. Hard hats, safety glasses, and steel-toe safety boots are required in all areas of the site. Site-specific hazards and all necessary precautions will be discussed at the daily safety meetings. The Health and Safety Procedures Manual for LANTDIV will be maintained at the project site as a reference document.

3.3 ENVIRONMENTAL HAZARDS

Environmental factors such as weather, wild animals, insects, and irritant plants pose a hazard when performing outdoor work. The SSO and SS will take all necessary measures to alleviate these hazards should they arise.

3.3.1 Heat Stress

The combination of warm ambient temperature and protective clothing result in the potential for heat stress. Heat stress disorders include:

- Heat rash
- Heat cramps

- Heat exhaustion
- Heat stroke

Heat stress prevention is outlined in procedure No. 22 of the OHM Corp. LANTDIV Health and Safety Procedures manual. This information will be reviewed during safety meetings. Workers will be encouraged to increase consumption of water and electrolyte-containing beverages (e.g., Gatorade).

It is recommended that workers break approximately every 2 hours for 10 to 15 minute rest periods when temperatures rise above 72.5 degrees F. and protective clothing is worn. In addition, workers are encouraged to take rests whenever they feel any adverse effects that may be heat-related. The frequency of breaks may need to be increased upon worker recommendation to the SSO and SS. Heat stress can be prevented by assuring an adequate work/rest schedule; guidelines are printed below.

AMBIENT TEMPERATURE	NO CHEMICAL PROTECTIVE CLOTHING (LEVEL D PPE)	CHEMICAL PROTECTIVE CLOTHING (D+/C/B/A)
90° F or above	After 45 minutes of work	After 15 minutes of work
87.5 F-90 F	After 60 minutes of work	After 30 minutes of work
82.5-87.5 F	After 90 minutes of work	After 60 minutes of work
77.5-82.5 F	After 120 minutes of work	After 90 minutes of work
72.5-77.5 F	After 150 minutes of work	After 120 minutes of work

The work/rest schedule can be calculated based on heat stress monitoring results. Monitoring consists of taking the radial pulse of a worker for 30 seconds immediately after exiting the work area. The frequency of monitoring is provided herein.

If the heart rate exceeds 110 beats per minute at the beginning of the rest period, shorten the next work cycle by ⅓ and keep the rest period the same. If the heart rate still exceeds 110 beats per minute at the next rest period, increase the following rest period by ⅓. The initial rest period should be at least 10 minutes.

Body temperature measured orally or through the ear canal may also be monitored to assess heat stress. Workers should not be permitted to continue work when their body temperature exceeds 100.4 F (38C). Monitoring should be conducted at the intervals given above.

Monitoring for heat stress will begin when the ambient temperature reaches or exceeds 70 degrees Fahrenheit when wearing chemical protective clothing, or 80 degrees Fahrenheit for site activities performed with no chemical protective clothing (Level D). Monitoring will include pulse rate, weight loss, oral temperature and signs and symptoms of heat stress. See Procedure 22 LANTDIV Health and Safety Procedures Manual.

3.3.2 Biological Hazards

- <u>POISON IVY *(Rhus Radicans)*</u>

  Poison Ivy may be found at the site. It is highly recommended that all personnel entering into an area with poison ivy wear a minimum of a tyvek coverall, to avoid skin contact.

  The majority of skin reactions following contact with offending plants are allergic in nature and characterized by:

- General symptoms of headache and fever
- Itching
- Redness
- A rash

Some of the most common and most severe allergic reactions result from contact with plants of the poison ivy group, including poison oak and poison sumac. Such plants produce severe rash characterized by redness, blisters, swelling, and intense burning and itching. The victim may develop a high fever and feel very ill. Ordinarily, the rash begins within a few hours after exposure, but may be delayed 24 to 48 hours.

Distinguishing Features of Poison Ivy Group Plants

The most distinctive features of poison ivy and poison oak are their leaves, which are composed of three leaflets each. Both plants have greenish-white flowers and berries that grow in clusters (see Figure 3.1).

First Aid

a. Remove contaminated clothing; wash all exposed areas thoroughly with soap and water, followed by rubbing alcohol. 1% hydrocortisone cream (over-the-counter) will aid in healing and reducing itch.

b. Apply calamine or other soothing lotion if rash is mild.

c. Seek medical advice if a severe reaction occurs, or if there is a known history of previous sensitivity.

- TICKS

Heavily vegetated areas of a site may have ticks. It is highly recommended that all personnel walking through such areas wear a tyvek coverall and latex boot covers taped at all joints. The ticks will stand out against the light colors. A tick or insect repellent containing DEET is recommended.

Ticks can transmit several diseases, including Rocky Mountain spotted fever, a disease that occurs in the eastern portion of the United States as well as the western portion, and Lyme disease. Ticks adhere tenaciously to the skin or scalp. There is some evidence that the longer an infected tick remains attached, the greater is the chance that it will transmit disease.

First Aid

a. Carefully (slowly and gently) remove the tick with tweezers, taking care that all parts are removed.

b. With soap and water, thoroughly, but gently, scrub the area from which the tick has been removed, because disease germs may be present on the skin; also wipe the bite area with an antiseptic.

FIGURE 3.1
POISONOUS PLANTS

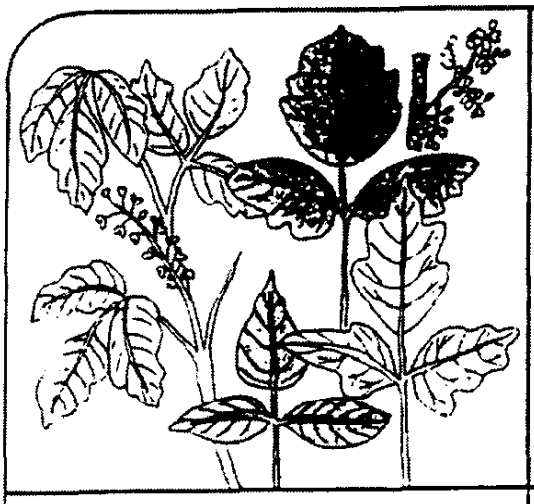

COMMON POISON IVY
(RHUS RADICANS)

- Grows as a small plant, a vine, and a shrub.
- Grows everywhere in the United States except California and parts of adjacent states. Eastern oak leaf poison ivy is one of its varieties.
- Leaves always consist of three glossy leaflets.
- Also known as three-leaf ivy, poison creeper, climbing sumac, poison oak, markweed, picry, and mercury.

WESTERN POISON OAK
(RHUS DIVERSILOBA)

- Grows in shrub and sometimes vine form.
- Grows in California and parts of adjacent states.
- Sometimes called poison ivy, or yeara.
- Leaves always consist of three leaflets.

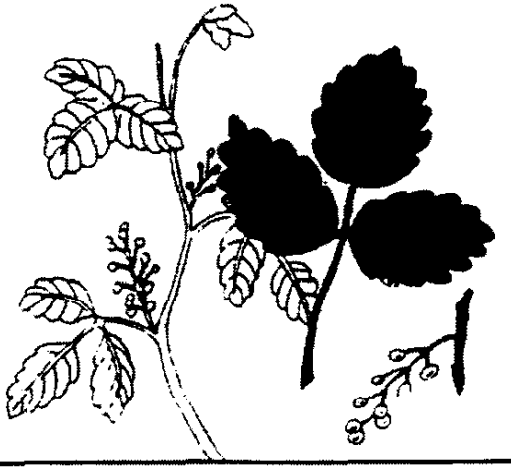

POISON SUMAC
(RHUS VERNIX)

- Grows as a woody shrub or small tree from 5 to 25 feet tall.
- Grows in most of eastern third of United States.
- Also known as swamp sumac, poison elder, poison ash, poison dogwood, and thunderwood.

c. If you have been bitten, place the tick in a jar labeled with the date, location of the bite, and the location acquired. If any symptom appears, such as an expanding red rash, contact a physician immediately.

- LYME DISEASE

Lyme disease may cause a number of medical conditions, including arthritis, that can be treated if you recognize the symptoms early and see your doctor. Early signs may include a flu-like illness, an expanding skin rash and joint pain. If left untreated, Lyme disease can cause serious nerve and heart problems as well as a disabling type of arthritis.

You are more likely to spot early signs of Lyme disease rather than see the tick or its bite. This is because the tick is so small (about the size of the head of a common pin or a period on this page and a little larger after they fill with blood), you may miss it or signs of a bite. However, it is also easy to miss the early symptoms of Lyme disease.

In its early stage, Lyme disease may be a mild illness with symptoms like the flu. It can include a stiff neck, chills, fever, sore throat, headache, fatigue, and joint pain. But this flu-like illness is usually out of season, commonly happening between May and October when ticks bite.

Most people develop a large, expanding skin rash around the area of the bite. Some people may get more than one rash. The rash may feel hot to the touch and may be painful. Rashes vary in size, shape, and color, but often look like a red ring with a clear center. The outer edges expand in size. Its easy to miss the rash and the connection between the rash and the tick bite. The rash develops from three days to as long as a month after the tick bite. Almost one third of those with Lyme disease never get the rash.

Joint or muscle pain may be another early sign of Lime disease. These aches and pains may be easy to confuse with the pain that comes from other types of arthritis. However, unlike many other types of arthritis, this pain seems to move or travel from joint to joint.

In later stages, Lyme disease may be confused with other medical problems. These problems can develop months to years after the first tick bite.

Early treatment of Lyme disease symptoms with antibiotics can prevent the more serious medical problems of later stages. If you suspect that you have symptoms of Lime disease, contact your doctor.

Lyme disease can cause problems with the nervous system that look like other diseases. These include symptoms of stiff neck, severe headache, and fatigue usually linked to meningitis. They may also include pain and drooping of the muscles on the face, called Bell's Palsy. Lyme disease can also mimic symptoms of multiple sclerosis or other types of paralysis.

Lyme disease can also cause serious but reversible heart problems, such as irregular heart beat. Finally, Lyme disease can result in a disabling, chronic type of arthritis that most often affects the knees. Treatment is more difficult and less successful in later stages. Researchers think these more serious problems may be linked to how the body's defense or immune system responds to the infection.

3.3.3 Noise

Hearing protection is required for workers operating or working near heavy equipment, where the noise level is greater than 85 dbA (TWA) as well as personnel working around heavy equipment. The SSO will determine the need for and appropriate testing procedures, i.e., sound level meter and/or dosimeter for noise measurement.

3.4 TASK-SPECIFIC JOB SAFETY ANALYSES

This section of the Site-Specific HASP provides a breakdown of the hazards and control measures for each principal task. These Job Safety Analyses are general in nature and must be made project specific by the Site Supervisor prior to each task. The Job Safety Analyses will be field checked by the supervisor on an ongoing basis and revised as necessary. All revisions will be communicated to the work crew.

3.4.1	JOB SAFETY ANALYSIS FOR SITE PREPARATION			
AIR MONITORING: "ACTION LEVELS" **PID: <1 PPM, LEVEL D; ≥1 PPM <5 PPM, LEVEL C; >5 PPM LEVEL B** **LEL/O_2: ≥10% LEL, STOP WORK, EVACUATE; <20.9% O_2, LEVEL B; <19.5% O_2, MECHANICAL VENTILATION, CONSTANT MONITORING**				
Task Breakdown	**Potential Hazards**	**Hazard Control Measures**	**Personal Protective Equipment**	**Air Monitoring Devices**
Equipment/ Facility Set-up	Slips, Trips, Falls	• Clear walkways work areas of equipment, tools, vegetation, excavated material and debris • Mark, identify, or barricade other obstructions		
	Electrical Shock	• De-energize or shut off utility lines at their source before work begins • Use double insulated or properly grounded electric power-operated tools • Maintain tools in a safe condition • Provide an equipment-grounding conductor program or employ ground-fault circuit interrupters • Use qualified electricians to hook up electrical circuits • Inspect all extension cords daily for structural integrity, ground continuity, and damaged insulation • Cover or elevate electric wire or flexible cord passing through work areas to protect from damage • Keep all plugs and receptacles out of water • Use approved water-proof, weather-proof type if exposure to moisture is likely • Inspect all electrical power circuits prior to commencing work • Follow Lockout-Tagout procedures in accordance with OHM Health and Safety Procedures # 6-4		
	Handling Heavy Objects	• Observe proper lifting techniques • Obey sensible lifting limits (60 lb. maximum per person manual lifting) • Use mechanical lifting equipment (hand carts, trucks) to move large, awkward loads		
	Sharp Objects	• Wear cut resistant work gloves when the possibility of lacerations or other injury may be caused by sharp edges or objects • Maintain all hand and power tools in a safe condition • Keep guards in place during use	Leather gloves, re-enforced palm	

3.4.1	JOB SAFETY ANALYSIS FOR SITE PREPARATION			
AIR MONITORING: "ACTION LEVELS" **PID: <1 PPM, LEVEL D; ≥1 PPM <5 PPM, LEVEL C; >5 PPM LEVEL B** **LEL/O_2: ≥10% LEL, STOP WORK, EVACUATE; <20.9% O_2, LEVEL B; <19.5% O_2, MECHANICAL VENTILATION, CONSTANT MONITORING**				
Task Breakdown	**Potential Hazards**	**Hazard Control Measures**	**Personal Protective Equipment**	**Air Monitoring Devices**
Equipment/ Facility Set-up (Continued)	High Noise Levels	• Use hearing protection when exposed to excessive noise levels (greater than 85 dBA over an 8-hour work period)	Ear plugs	
	Low Ambient Temperature	• Monitor for Cold stress in accordance with OHM Health and Safety Procedures # 3-5 • Provide fluids to prevent worker dehydration		

3.4.2	JOB SAFETY ANALYSIS FOR CLEARING AND GRUBBING, TREE FELLING			
AIR MONITORING: "ACTION LEVELS" **PID: <1 PPM, LEVEL D; ≥1 PPM <5 PPM, LEVEL C; >5 PPM LEVEL B** **LEL/O_2: ≥10% LEL, STOP WORK, EVACUATE; <20.9% O_2, LEVEL B; <19.5% O_2, MECHANICAL VENTILATION, CONSTANT MONITORING**				
Task Breakdown	**Potential Hazards**	**Hazard Control Measures**	**Personal Protective Equipment**	**Air Monitoring Devices**
Clearing, Grubbing	Struck By/ Against Heavy Equipment	• Use reflective warning vests worn when exposed to vehicular traffic • Isolate equipment swing areas • Make eye contact with operators before approaching equipment • Understand and review hand signals	Warning vests, Hard hat, safety glasses	
	Slips, Trips, Falls	• Clear walkways, work areas of equipment, tools, vegetation, excavated material, and debris • Mark, identify, or barricade other obstructions		
	Handling Heavy Objects	• Observe proper lifting techniques • Obey sensible lifting limits (60 lb. maximum per person manual lifting) • Use mechanical lifting equipment (hand carts, tracks) to move large, awkward loads		
	Eye Injuries	• Wear face shield, goggles when operating powered clearing / grubbing equipment	Face shield, goggles, Leather gloves, reinforced palms	
	Sharp Objects	• Wear cut resistant work gloves when the possibility of lacerations or other injury may be caused by sharp edges or objects • Maintain all hand and power tools in a safe condition • Keep guards in place during use • Close doors, windows on heavy equipment to prevent injuries from tree branches and other vegetation	Leather gloves, re-enforced palms	

3.4.2	JOB SAFETY ANALYSIS FOR CLEARING AND GRUBBING, TREE FELLING			
AIR MONITORING: "ACTION LEVELS" **PID: <1 PPM, LEVEL D; ≥1 PPM <5 PPM, LEVEL C; >5 PPM LEVEL B** **LEL/O_2: ≥10% LEL, STOP WORK, EVACUATE; <20.9% O_2, LEVEL B; <19.5% O_2, MECHANICAL VENTILATION, CONSTANT MONITORING**				
Task Breakdown	**Potential Hazards**	**Hazard Control Measures**	**Personal Protective Equipment**	**Air Monitoring Devices**
Clearing, Grubbing (Continued)	Insect/ Snake Bites	• Review injury potential and types of snakes with workers • Avoid insect nests areas, likely habitats of snakes outside work areas • Emphasize The Buddy System where such injury potential exists • Use insect repellant, wear PPE to protect against sting/bite injuries	Tyvek coveralls, duct tape bottom of coveralls to boots or latex boot covers	
	Contact Dermatitis	• Wear PPE to avoid skin contact with contaminated soil, plants, or other skin irritants • Identify and review poisonous plants with workers	Tyvek coveralls, duct tape bottom of coveralls to boots or latex boot covers (See Section 5.0 HASP)	
	Operations of power clearing tools (brush saws, weed wackers...)	• Wear eye, face, hand & hearing protection when operating power clearing equipment • Shut-off / idle power tools walking between work areas • Store flammable liquids in well ventilated areas, away from work areas • Shut off equipment during re-fueling • Prohibit smoking while operating clearing equipment • Provide ABC (or equivalent) fire extinguishers for all work	Face shield, goggles, cloth gloves, ear plugs,	
	Operation of chippers	• Lockout/target/de-energize any electrical circuits on chippers before clearing/maintenance • Identify staging area for debris • Keep chipper approach free of ground debris • Follow all precautions for operation of power cleaning tools		
	High Noise Levels	• Use hearing protection when exposed to excessive noise levels (greater than 85 dBA over an 8-hour work period)	Ear plugs	
	Low Ambient Temperature	• Monitor for Cold stress in accordance with OHM Health and Safety Procedures # 3-5 • Provide fluids to prevent worker dehydration		

3.4.2	JOB SAFETY ANALYSIS FOR CLEARING AND GRUBBING, TREE FELLING			
AIR MONITORING: "ACTION LEVELS" **PID: <1 PPM, LEVEL D; ≥1 PPM <5 PPM, LEVEL C; >5 PPM LEVEL B** **LEL/O_2: ≥10% LEL, STOP WORK, EVACUATE; <20.9% O_2, LEVEL B; <19.5% O_2, MECHANICAL VENTILATION, CONSTANT MONITORING**				
Task Breakdown	**Potential Hazards**	**Hazard Control Measures**	**Personal Protective Equipment**	**Air Monitoring Devices**
Tree Felling; Chippers, Chainsaws	Fires	• Eliminate sources of ignition from the work area • Prohibit Smoking • Provide ABC (or equivalent) fire extinguishers for all flammable storage areas, powered cutting equipment re-fueling areas, fuel powered generators and compressors • Store flammable liquids in well ventilated areas • Prohibit storage, transfer of flammable liquids in plastic containers • Enforce use of approved flammable liquid safety cans • Post "NO SMOKING" signs • Store combustible materials away from flammables • Allow chainsaw to cool off before re-fueling • Prohibit chainsaw startup in re-fueling areas		
	Slips, Trips, Falls	• Clear walkways, work areas of equipment, tools vegetation, excavated material, and debris • Mark, identify, or barricade other obstructions • Ensure safe footing before starting chainsaws		
	Sharp Objects	• Wear cut resistant work gloves when the possibility of lacerations or other injury may be caused by sharp edges or objects • Prohibit handling, touching chain blade while chainsaw is operating • Maintain all hand and power tools in a safe condition • Keep guards in place during use	Leather gloves, re-enforced palms	
	Kickback	• Maintain both hands on chainsaw while cutting • Avoid cutting actions that may pinch the chain blade • Idle or shut down chainsaw when walking any distance • Operate chainsaws only at 'full' power when cutting • Prohibit use of defective chainsaws		

3.4.2	JOB SAFETY ANALYSIS FOR CLEARING AND GRUBBING, TREE FELLING			
AIR MONITORING: "ACTION LEVELS" **PID: <1 PPM, LEVEL D; ≥1 PPM <5 PPM, LEVEL C; >5 PPM LEVEL B** **LEL/O_2: ≥10% LEL, STOP WORK, EVACUATE; <20.9% O_2, LEVEL B; <19.5% O_2, MECHANICAL VENTILATION, CONSTANT MONITORING**				
Task Breakdown	**Potential Hazards**	**Hazard Control Measures**	**Personal Protective Equipment**	**Air Monitoring Devices**
Tree Felling; Chippers Chainsaws (Continued)	Struck By/ Against Heavy Equipment, Falling Objects, Flying Debris	• Use reflective warning vests worn when exposed to vehicular traffic • Wear face protection to avoid facial injury from flying chain debris • Isolate equipment operation, tree felling areas (2 ½ tree lengths) • Make eye contact with (chainsaw) operators before approaching • Inspect tree for dead, broken limbs before cutting • Prohibit cutting overhead, above shoulder height • Understand and review hand signals	Warning vests, Hard hat, safety goggles and face shield	
	Burns	• Wear proper PPE for protection from hot motor parts, muffler	Leather gloves, re-enforced palms	
	Caught by/between	• Prohibit standing on, straddling logs while ground cutting • Stand uphill while ground cutting • Start relieving cuts on compression side of log first, then make bucking cut on tension side • Prohibit workers from holding logs while being cut • Stop saw motor to remove saw if pinched		
	Handling Heavy Objects	• Observe proper lifting techniques • Obey sensible lifting limits (60 lb. maximum per person manual lifting) • Use mechanical lifting equipment (hand carts, trucks) to move large, awkward loads		
	Insect Bites	• Review injury potential with workers • Avoid insect nests areas, likely habitats outside work areas • Emphasize The Buddy System where such injury potential exists • Use insect repellant, wear PPE to protect against sting/bite injuries.	Tyvek coveralls, duct tape bottom of coveralls to boots or latex boot covers	

3.4.2	JOB SAFETY ANALYSIS FOR CLEARING AND GRUBBING, TREE FELLING			
AIR MONITORING: "ACTION LEVELS" **PID: <1 PPM, LEVEL D; ≥1 PPM <5 PPM, LEVEL C; >5 PPM LEVEL B** **LEL/O_2: ≥10% LEL, STOP WORK, EVACUATE; <20.9% O_2, LEVEL B; <19.5% O_2, MECHANICAL VENTILATION, CONSTANT MONITORING**				
Task Breakdown	**Potential Hazards**	**Hazard Control Measures**	**Personal Protective Equipment**	**Air Monitoring Devices**
Tree Felling; Chippers, Chainsaws (Continued)	Contact Dermatitis	• Wear PPE to avoid skin contact with contaminated soil, plants, or other skin irritants • Identify and review poisonous plants with workers	Tyvek coveralls, duct tape bottom of coveralls to boots or latex boot covers (See Section 5.0 HASP)	
	High Noise Levels	• Use hearing protection when exposed to excessive noise levels (greater than 85 dBA over an 8-hour work period)	Ear plugs	
	Low Ambient Temperature	• Monitor for Cold stress in accordance with OHM Health and Safety Procedures # 3-5 • Provide fluids to prevent worker dehydration		

3.4.3	JOB SAFETY ANALYSIS FOR SITE SURVEY / IDENTIFICATION ACTIVITIES			
AIR MONITORING: "ACTION LEVELS" **PID: <1 PPM, LEVEL D; ≥1 PPM <5 PPM, LEVEL C; >5 PPM LEVEL B** **LEL/O_2: ≥10% LEL, STOP WORK, EVACUATE; <20.9% O_2, LEVEL B; <19.5% O_2, MECHANICAL VENTILATION, CONSTANT MONITORING**				
Task Breakdown	**Potential Hazards**	**Hazard Control Measures**	**Personal Protective Equipment**	**Air Monitoring Devices**
Site Survey / Identification Activities	Inhalation and Contact with Hazardous Substances	• Provide workers proper skin, eye and respiratory protection based on the exposure hazards present • Review hazardous properties of site contaminants before beginning work	Tyvek coveralls, nitrile gloves, latex or neoprene boots	LEL/O_2, PID
	Struck By/ Against Heavy Equipment, Falling Objects, Flying Debris	• Use reflective warning vests worn when exposed to vehicular traffic • Appoint a competent person with structural engineering experience to perform building inspections • Inspect buildings, structures, stairs for structural stability before completing interior inspection, recovery activities • Prohibit, barricade entry into buildings with questionable stability • Implement structure re-enforcement where work activities require building entry • Use 'buddy system' for work activities inside buildings with questionable stability • Conduct daily inspections of buildings in repeated use when weather or other factors may compromise structure stability	Warning vests, Hard hat, safety goggles and face shield	
	Slips, Trips, Falls	• Clear walkways, work areas of equipment and tools • Mark, identify, or barricade other obstructions		
	Sharp Objects	• Wear cut resistant work gloves when the possibility of lacerations or other injury may be caused by sharp edges or objects • Maintain all hand and power tools in a safe condition • Keep guards in place during use • Close doors, windows on heavy equipment to prevent injuries from tree branches and other vegetation	Leather gloves, re-inforced palms	

3.4.3	JOB SAFETY ANALYSIS FOR SITE SURVEY / IDENTIFICATION ACTIVITIES			
AIR MONITORING: "ACTION LEVELS" **PID: <1 PPM, LEVEL D; ≥1 PPM <5 PPM, LEVEL C; >5 PPM LEVEL B** **LEL/O_2: ≥10% LEL, STOP WORK, EVACUATE; <20.9% O_2, LEVEL B; <19.5% O_2, MECHANICAL VENTILATION, CONSTANT MONITORING**				
Task Breakdown	**Potential Hazards**	**Hazard Control Measures**	**Personal Protective Equipment**	**Air Monitoring Devices**
Site Survey / Identification Activities (Continued)	Contact Dermatitis	• Wear long sleeveshirts / trousers to avoid skin contact with plants or other skin irritants • Identify and review poisonous plants with workers • Avoid unnecessary clearing of plant/vegetation areas • Cover vegetation with plastic(visqueen) where survey position raises exposure potential	Tyvek coveralls, duct tape bottom of coveralls to work boots or latex boots	
	Low Ambient Temperature	• Monitor for Cold stress in accordance with OHM Health and Safety Procedures # 3-5 • Provide fluids to prevent worker dehydration		

3.4.4	JOB SAFETY ANALYSIS FOR DRUM, TRANSFORMER AND CONTAINER HANDLING/OVERPACKING			
AIR MONITORING: "ACTION LEVELS" **PID: <1 PPM, LEVEL D; ≥1 PPM <5 PPM, LEVEL C; >5 PPM LEVEL B** **LEL/O_2: ≥10% LEL, STOP WORK, EVACUATE; <20.9% O_2, LEVEL B; <19.5% O_2, MECHANICAL VENTILATION, CONSTANT MONITORING**				
Task Breakdown	**Potential Hazards**	**Hazard Control Measures**	**Personal Protective Equipment**	**Air Monitoring Devices**
Staging Drums, Transformers and Containers	Handling Heavy Objects	• Observe proper lifting techniques • Obey sensible lifting limits (60 lb. maximum per person manual lifting) • Use mechanical lifting equipment (hand carts, trucks) to move large, awkward loads		
	Caught In/ Between Moving Parts	• Identify and understand parts of equipment which may cause crushing, pinching, rotating or similar motions • Assure guards are in place to protect from these parts of equipment during operation • Provide and use proper work gloves when the possibility of pinching, or other injury may be caused by moving/ handling large or heavy objects • Maintain all equipment in a safe condition • Keep all guards in place during use • De-energize and locked-out machinery before maintenance or service		
	Slips, Trips, Falls	• Clear walkways, work areas of equipment, vegetation, excavated material, tools, and debris • Mark, identify, or barricade other obstructions		
	Fire/ Explosion	• Eliminate sources of ignition from the work area • Prohibit smoking in work areas • Provide ABC (or equivalent) fire extinguishers for all work, flammable storage areas; fuel powered generators and compressors • Store flammable liquids in well ventilated areas • Prohibit storage, transfer of flammable liquids in plastic containers • Post "NO SMOKING" signs • Store combustible materials away from flammables • Store, all compressed gas cylinders upright, caps in place when not in use • Separate Flammables and Oxidizers by 20 feet minimum		

3.4.4	JOB SAFETY ANALYSIS FOR DRUM, TRANSFORMER AND CONTAINER HANDLING/OVERPACKING			
AIR MONITORING: "ACTION LEVELS" **PID: <1 PPM, LEVEL D; ≥1 PPM <5 PPM, LEVEL C; >5 PPM LEVEL B** **LEL/O_2: ≥10% LEL, STOP WORK, EVACUATE; <20.9% O_2, LEVEL B; <19.5% O_2, MECHANICAL VENTILATION, CONSTANT MONITORING**				
Task Breakdown	**Potential Hazards**	**Hazard Control Measures**	**Personal Protective Equipment**	**Air Monitoring Devices**
Staging Drums, Transformers and Containers (Continued)	Sharp Objects	• Wear cut resistant work gloves when the possibility of lacerations or other injury may be caused by sharp edges or objects • Maintain all hand and power tools in a safe condition • Keep guards in place during use	Leather gloves re-enforced palms	
	Struck by, Against Heavy Equipment, Protruding Objects	• Use reflective warning vests worn when exposed to vehicular traffic • Isolate equipment swing areas • Make eye contact with operators before approaching equipment • Understand and review hand signals	Warning vests, Hard hat. Safety glasses	
	Inhalation and Contact with Hazardous Substances	• Provide workers proper skin, eye and respiratory protection based on the exposure hazards present • Review hazardous properties of site contaminants with workers before operations begin	Tyvek coveralls, nitrile gloves, latex boots (see Section 5.0 HASP)	LEL/O_2, PID
	Low Ambient Temperature	• Monitor for Cold stress in accordance with OHM Health and Safety Procedures # 3-5 • Provide fluids to prevent worker dehydration		

3.4.5	JOB SAFETY ANALYSIS FOR CONTAMINATED PUMP AND TRANSFER OF SODIUM HYPOCHLORITE			
AIR MONITORING: "ACTION LEVELS" **PID: <1 PPM, LEVEL D; ≥1 PPM <5 PPM, LEVEL C; >5 PPM LEVEL B** **LEL/O_2: ≥10% LEL, STOP WORK, EVACUATE; <20.9% O_2, LEVEL B; <19.5% O_2, MECHANICAL VENTILATION, CONSTANT MONITORING**				
Task Breakdown	**Potential Hazards**	**Hazard Control Measures**	**Personal Protective Equipment**	**Air Monitoring Devices**
Sodium Hypochlorite Pump and Transfer	Inhalation and Contact with Hazardous Substances	• Provide workers proper skin, eye and respiratory protection based on the exposure hazards present • Review hazardous properties of site contaminants with workers before operations begin	Poly ethylene-coated tyvek coveralls latex or neoprene boots (See Section 5.0 HASP)	LEL/O_2, PID
	Handling Heavy Objects	• Observe proper lifting techniques • Obey sensible lifting limits (60 lb. maximum per person manual lifting) • Use mechanical lifting equipment (hand carts, trucks) to move large, awkward loads		
	Slips, Trips, Falls	• Clear walkways, work areas, of equipment, vegetation, excavated material, tools and debris • Mark, identify, or barricade other obstructions		
	Struck by/ Against Heavy Equipment, Protruding Objects, Splash, Spill and Pressurized Lines and Discharge	• Use reflective warning vests when exposed to vehicular traffic • Isolate equipment swing areas • Make eye contact with operators before approaching equipment • Wire tie hose connections closed • Release head pressure before opening hose connections • Barricade or enclose work areas • Restrict entry to the work area to authorized personnel • Wear hard hats, safety glasses with side shields, and steel-toe safety boots	Warning vests, hard hat, goggles and face shield	

3.4.6	JOB SAFETY ANALYSIS FOR SOIL AND CONTAINER SAMPLING			
AIR MONITORING: "ACTION LEVELS" **PID: <1 PPM, LEVEL D; ≥1 PPM <5 PPM, LEVEL C; >5 PPM LEVEL B** **LEL/O_2: ≥10% LEL, STOP WORK, EVACUATE; <20.9% O_2, LEVEL B; <19.5% O_2, MECHANICAL VENTILATION, CONSTANT MONITORING**				
Task Breakdown	**Potential Hazards**	**Hazard Control Measures**	**Personal Protective Equipment**	**Air Monitoring Devices**
Soil and Container Sampling	Sharp Objects	• Wear cut resistant work gloves when the possibility of lacerations or other injury may be caused by sharp edges or objects • Maintain all hand and power tools in a safe condition • Keep guards in place during use	Wizard gloves or equivalent	
	Handling Heavy Objects	• Observe proper lifting techniques • Obey sensible lifting limits (60 lb. maximum per person manual lifting) • Use mechanical lifting equipment (hand carts, trucks) to move large, awkward loads		
	Slips, Trips, Falls	• Clear walkways, work areas of equipment, tools, vegetation, excavated material, and debris • Mark, identify, or barricade other obstructions		
	Inhalation and Contact with Hazardous Substances	• Provide workers proper skin, eye and respiratory protection based on the exposure hazards present • Review hazardous properties of site contaminants with workers before operations begin	Tyvek coveralls, latex or neoprene boots, nitrile gloves (see Section 5.0 HASP)	LEL/O_2, PID
	Low Ambient Temperature	• Monitor for Cold stress in accordance with OHM Health and Safety Procedures # 3-5 • Provide fluids to prevent worker dehydration		

3.5 ACCIDENT PREVENTION

This Site Specific Health and Safety Plan has been developed with accident prevention as the primary goal. Details are discussed throughout this HASP. This section will outline the Accident Prevention Plan established for this project.

3.5.1 Administrative Responsibilities

The Project Manager is ultimately responsible for the safety and health of site personnel. The PM is to provide the materials and maintenance of equipment necessary to enhance and maintain safe site and work conditions.

The SS has the responsibility and the authority to control the day to day remediation activities in the field with respect to safety. The SS reports directly to the Project Manager. The SS monitors employees for signs of heat stress, excessive fatigue, and obvious outward signs of chemical exposure. In addition, the SS ensures that equipment brought to the site is in proper working condition and inspected regularly. These responsibilities will be shared by the Site Foremen.

The Site Safety Officer reports to the Project Manager and the Health and Safety Manager and is responsible to point out unsafe conditions that may pose a hazard to personnel or the public. The SSO is required to conduct regular safety inspections. Accident investigation will be performed by the SS with the assistance of the SSO.

3.5.2 Phase Safety Plans (Job Safety Analyses)

Site-Specific Phase Safety Plans (Job Safety Analyses) will be developed for each contract activity and operation occurring in each major phase of work. The Phase Safety Plan for a specific task will be developed utilizing the job safety analyses presented in Section 3.4. The following areas will be addressed:

- Identify activity being performed; Sequence of work
- Hazards to be controlled in each activity
- Hazard control measures

The analysis will be discussed with all site personnel performing the task and will be documented in a site log. Prior to work on site, all site personnel will undergo a safety and health orientation including discussion of the HASP and site conditions. Prior to each shift, a daily safety meeting will be held discussing the previous day's and the current days's health and safety issues.

3.5.3 Subcontractors

All subcontractor employees are subject to the same training and medical surveillance requirements as OHM personnel depending on job activity. All subcontractor personnel will be required to sign in daily and be required to attend a daily meeting discussing operations and safety issues. All subcontractors involved in construction/remedial activities will be required to submit a Subcontractor Safety Prequalification Questionnaire prior to the award of a contract. Subcontractors will submit Job Safety analyses for their work activities to the OHM SS. The subcontractor reports directly to the OHM Project Manager. All incidents involving subcontractor employees shall be reported to the OHM Site Supervisor and a copy of the subcontractor's injury/illness report shall be submitted to the OHM SS within 24 hours.

3.5.4 Local Requirements

OHM will comply with any applicable local requirements such as noise control and traffic rules at the site. Traffic control will be developed as is needed for specific tasks.

3.5.5 Housekeeping

The project site will be kept in a neat and orderly fashion to prevent common injuries due to slips, trips, and falls, accumulation of trash to keep insects away, and to maintain a professional work site. Personnel shall not leave a work area in a disorderly condition. The SS responsible for housekeeping.

3.5.6 Emergency and Contingency Plan

OHM has developed an emergency contingency plan provided in section 8.0 of this HASP.

3.5.7 Safety Inspections

The Site Supervisor will perform regular safety inspections. A report, including results of the inspection and any corrective actions taken, will be kept in the project files. A copy will be provided to the client representative. Identified safety deficiencies and corrective measures will also be recorded in the "Contractors QC Report."

4.0 WORK AND SUPPORT AREAS

To prevent migration of contamination from personnel and equipment work areas will be clearly specified prior to beginning operations. OHM has designated work areas or zones as suggested by the NIOSH/OSHA/USCG/EPA'S document, titled "Occupational Safety and Health Guidance Manual for Hazardous Waste Site Activities." Each work area will be divided into three zones as follows:

- An Exclusion or "hot" Zone (EZ)
- A Contamination Reduction Zone (CRZ)
- A Support Zone (SZ)

4.1 EXCLUSION ZONE

The EZ is the area suspected of contamination and presents the greatest potential for worker exposure. Personnel entering the area must wear the mandated level of protection for that area. In certain instances, different levels of protection will be required depending on the tasks and monitoring performed within that zone. The EZ for this project will be the locations of specific items during recovery activities and storage and staging areas of those items.

4.2 CONTAMINATION REDUCTION ZONE

The CRZ or transition zone will be established between the EZ and SZ. In this area, personnel will begin the sequential decontamination process required to exit the EZ. To prevent off-site migration of contamination and for personnel accountability, all personnel will enter and exit the EZ through the CRZ. The CRZ for this project will be the access/egress routes to/from the EZ and the personnel and equipment decontamination stations.

4.3 SUPPORT ZONE

The SZ serves as a clean, control area. Operational support facilities are located within the SZ. Normal work clothing and support equipment are appropriate in this zone. Contaminated equipment; or clothing will not be allowed in the SZ. The support facilities should be located upwind of site activities. There will be a clearly marked controlled access point from the SZ into the CRZ and EZ that is monitored closely by the SSO and the SS to ensure proper safety protocols are followed. The SZ will be the office and crew trailers and the site access roads and parking areas.

4.4 SITE CONTROL LOG

A log of all personnel visiting, entering or working on the site shall be maintained in the main office trailer location. The log will record the date, name, company or agency, and time entering or exiting the site.

No visitor will be allowed in the EZ without showing proof of training and medical certification, per 29 CFR 1910.120(e), (f). Visitors will supply their own boots and respiratory equipment, if required. Visitors will attend a site orientation given by the SSO and sign the HASP.

4.5 GENERAL

The following items are requirements to protect the health and safety of workers and will be discussed in the safety briefing prior to initiating work on the site:

- Eating, drinking, chewing gum or tobacco, smoking, or any practice that increases the probability of hand to mouth transfer and ingestion of contamination is prohibited in the EZ and CRZs.
- Hands and face must be washed upon leaving the EZ and before eating, drinking, chewing gum or tobacco and smoking or other activities which may result in ingestion of contamination.
- A buddy system will be used. Hand signals will be established to maintain communication.
- During site operations, each worker will consider himself as a safety backup to his partner. Off-site personnel provide emergency assistance. All personnel will be aware of dangerous situations that may develop.
- Visual contact will be maintained between buddies on site when performing hazardous duties.
- No personnel will be admitted to the site without the proper safety equipment, training, and medical surveillance certification.
- All personnel must comply with established safety procedures. Any staff member who does not comply with safety policy, as established by the SSO or the SS, will be immediately dismissed from the site.
- Proper decontamination procedures must be followed before leaving the site.
- All employees and visitors must sign in and out of the site.

5.0 PROTECTIVE EQUIPMENT

This section addresses the various levels of personal protective equipment (PPE) which are or may be required at this job site. OHM personnel are trained in the use of all PPE utilized.

5.1 ANTICIPATED PROTECTION LEVELS

TASK	PROTECTION LEVEL	COMMENTS/MODIFICATIONS
Site Setup, Survey, Identification and segregation	Level D	Hardhat, steel-toe work boots, safety eye wear (safety glasses with side shields or goggles and face shield if splash or flying particles are likely) and hearing protection >85 dBA
Known Container Sampling, Staging	Level D+/C	Polyethylene-coated (liquids) or regular Tyvek coveralls; nitrile or latex gloves; latex or neoprene boots; up-grade to Level C if 'action levels' are exceeded (see Section 7.0 HASP)
Transformer Sampling	Level D	Tyvek coveralls; sample gloves
Sampling of Unknowns	Level B	Polyethylene-coated (liquids) or regular Tyvek coveralls; nitrile or latex gloves; latex or neoprene boots
Pump and Transfer of Sodium Hypochlorite Drums	Level C	Polyethylene-coated Tyvek coveralls; nitrile or latex gloves; latex or neoprene boots
CRZ Workers	Level D	Hardhat, steel-toe work boots, safety eye wear (safety glasses with side shields or goggles and face shield if splash or flying particles are likely) and hearing protection >85 dBA
SZ Workers	Level D	

5.2 PROTECTION LEVEL DESCRIPTIONS

This sections lists the minimum requirements for each protection level. Modification to these requirements will be noted above.

5.2.1 Level D

Level D consists of the following:

- Safety glasses with side shields
- Hard hat
- Steel-toed work boots
- Work clothing as prescribed by weather

5.2.2 Modified Level D

Modified Level D consists of the following:

- Safety glasses with side shields
- Hard hat
- Steel-toed work boots
- Nitrile, neoprene, latex or PVC overboots
- Outer nitrile, neoprene, or PVC gloves over latex sample gloves
- Face shield (when projectiles or splashes pose a hazard)
- Tyvek coverall [Polyethylene-coated Tyveks required when workers have a potential to be exposed to contaminated liquids or sludges.]

5.2.3 Level C

Level C consists of the following:

- Full-face, air-purifying respirator with appropriate cartridges
- Hooded Tyvek Coveralls [Polyethylene-coated Tyveks required when workers have a potential to be exposed to contaminated liquids or sludges].
- Hard hat
- Steel-toed work boots
- Nitrile, neoprene, latex or PVC overboots
- Nitrile, neoprene, or PVC gloves over latex sample gloves
- Face shield (when projectiles or splashes pose a hazard)

5.2.4 Level B

Level B protection consists of the items required for Level C protection with the exception that an air-supplied respirator is used in place of the air-purifying respirator. Level B equipment will be on site for emergency response only.

5.3 SUPPLIED-AIR RESPIRATORS

If air monitoring shows that Level B protection is needed, OHM personnel will wear Survivair 9881-02 Hippack Airline respirators with 5-minute egress bottles. Personnel requiring Level "B" protection and high mobility will wear Survivair Mark 2 SCBA units.

5.4 BREATHING-AIR QUALITY

Code of Federal Regulations 29 CFR 1910.134 states breathing air will meet the requirement of the specification for Grade D breathing air as described in the ANSI/CGA Specification G-7.1-1989. OHM requires a certificate of analysis from vendors of breathing air in order to show that the air meets this standard. Breathing air will be obtained in cylinders exclusively and will be stationed in the exclusion zone (EZ).

5.5 AIR-PURIFYING RESPIRATORS

A NIOSH approved full face respirator with appropriate air purifying cartridges will be used for level C work.

5.6 RESPIRATOR CARTRIDGES

The crew members working in Level C will wear respirators equipped with air-purifying cartridges approved for the following contaminants.

- Organic vapors <1,000 ppm
- Chlorine gas <10 ppm
- Hydrogen chloride <50 ppm
- Sulfur dioxide <50 ppm
- Dusts, fumes and mists with a TWA <0.05 mg/m^3
- Asbestos-containing dusts and mists
- Radionuclides

5.7 CARTRIDGE CHANGES

All cartridges will be changed a minimum of once daily, or more frequently if personnel begin to experience increased inhalation resistance or breakthrough of a chemical warning property.

5.8 INSPECTION AND CLEANING

Respirators are checked periodically by a qualified individual and inspected before each use by the wearer. All respirators and associated equipment will be decontaminated and hygienically cleaned after each use.

5.9 FIT TESTING

Annual respirator fit tests are required of all personnel wearing negative-pressure respirators. The test will use isoamyl acetate or irritant smoke. The fit test must be for the style and size of the respirator to be used.

5.10 FACIAL HAIR

No personnel who have facial hair which interferes with the respirator's sealing surface will be permitted to wear a respirator and will not be permitted to work in areas requiring respirator use.

5.11 CORRECTIVE LENSES

Normal eyeglasses cannot be worn under full-face respirators because the temple bars interfere with the respirator's sealing surfaces. For workers requiring corrective lenses, special spectacles designed for use with respirators will be provided.

5.12 CONTACT LENSES

Contact lenses will not be worn with any type of respirator.

5.13 MEDICAL CERTIFICATION

Only workers who have been certified by a physician as being physically capable of respirator usage will be issued a respirator. Personnel unable to pass a respiratory fit test or without medical clearance for respirator use will not be permitted to enter or work in areas on site that require respiratory protection. Employees receive a written physicians opinion that they are fit for general hazardous waste operations as per 29 CFR 1910.120(f)(7).

5.14 SITE SPECIFIC PERSONAL PROTECTIVE EQUIPMENT (PPE) PROGRAM

The primary objective of the PPE program is to ensure employee protection and to prevent employee exposure to site contaminants during site operations. Engineering controls are not feasible for many tasks and, therefore, require the use of PPE.

The SS will be responsible for implementing all aspects of the PPE program. This includes donning and doffing, temperature related stress monitoring, inspection, and decontamination (see Section 6.0). PPE selection is identified in Table 5.1 for each specified task. The SS in consultation with the SSO, if assigned, Health and Safety Manager, project CIH and the ROICC will direct changes in PPE based on changing conditions. The site specific HASP will serve as written certification that the workplace was evaluated concerning PPE requirements. OHM Corporation's comprehensive PPE Program is described in Appendix D.

5.14.1 Site-Specific Respiratory Protection Program

The primary objective of respiratory protection is to prevent employee exposure to atmospheric contamination. When engineering measures to control contamination are not feasible, or while they are being implemented, personal respiratory protective devices will be used.

The criteria for determining respirator need have been evaluated based on the site contaminants; expected levels of protection are outlined in Section 5.1. Air monitoring will be conducted to confirm that respiratory protection levels are adequate (Section 7.0). All respirator users are OSHA trained in proper respirator use and maintenance. The SS and SSO will observe workers during respirator use for signs of stress. The SS, CIH, HSM, and SSO will also evaluate this HASP periodically to determine its continued effectiveness with regard to respiratory protection. All persons assigned to use respirators will have medical clearance to do so.

6.0 DECONTAMINATION PROCEDURES

This section describes the procedures necessary to ensure that both personnel and equipment are free from contamination when they leave the work site.

6.1 PERSONNEL DECONTAMINATION

Decontamination procedures will ensure that material which workers may have contacted in the EZ does not result in personal exposure and is not spread to clean areas of the site. These sequences describe the general decontamination procedures for Level D (Modified) and Level C . The specific stages will vary depending on the site, the task, the protection level, etc.

Level D Decontamination

1. Go to end of EZ
2. Remove and discard latex booties
3. Remove outer gloves and discard
4. Cross into CRZ (dirty side of respirator wash area)
5. Remove outer gloves and discard
6. Remove protective suit (polycoated/regular tyvek)
10. Remove inner sample gloves and discard
11. Wash face and hands

Level C Decontamination

1. Go to end of EZ
2. a. Wash outer boots (Tingley or Robars) and stage to let dry; or
   b. Remove and discard latex booties
3. Remove outer gloves and discard
4. Remove outer suit (Saranex/polycoated/regular tyvek)
5. Remove outer sample gloves and discard
6. Cross into CRZ (dirty side of respirator wash area)
7. Remove inner suit and discard, (if applicable)
8. Remove and wash respirator (4 stages)
   a. Soap and water solution
   b. First rinse
   c. Disinfect respirator (1 cap full of bleach to 1 gallon of water)
   d. Final rinse
9. Hang respirator to dry
10. Remove inner sample gloves and discard
11. Wash face and hands

6.1.1 Suspected Contamination

Any employee suspected of sustaining skin contact with chemical materials will first use the emergency shower. Following a thorough drenching, the worker will proceed to the decontamination facility. Here the worker will remove clothing, shower, don clean clothing, and immediately be taken to the first-aid station. Medical attention will be provided at determined by the degree of injury.

6.1.2 Personal Hygiene

Before any eating, smoking, or drinking, personnel will wash hands, arms, neck and face.

6.2 EQUIPMENT DECONTAMINATION

All contaminated equipment will be decontaminated before leaving the site. Decontamination procedures will vary depending upon the contaminant involved, but may include sweeping, wiping, scraping, hosing, or steaming the exterior of the equipment. Personnel performing this task will wear the proper PPE as prescribed by the SSO.

6.3 DISPOSAL

All decontamination liquids and disposable clothing will be treated as contaminated waste unless determined otherwise by accepted testing methods. Wastes will be disposed of according to state and federal regulations.

7.0 AIR MONITORING

Air monitoring will be conducted in order to determine airborne contamination levels. This ensures that respiratory protection is adequate to protect personnel against the chemicals that are encountered. The following air monitoring efforts will be used at this site. Additional air monitoring may be conducted at the discretion of the SSO.

The following chart describes the air monitoring required and appropriate action levels.

Monitoring Device	Action Level	Action
LEL/O_2	>10% LEL <20.8% O_2	Evacuate area, ventilate, upgrade to Level B if necessary, continue to monitor
PID	1-5 ppm unknowns 5-500 ppm unknowns >500 ppm unknowns	Level C Level B Level A

7.1 LOWER EXPLOSIVE LIMIT/OXYGEN (LEL/O_2) METER

Prior to entering a confined-space area or hot work involving welding, cutting, or other high heat-producing operations where flammable or combustible vapors may be present, LEL/O_2 measurements will be taken.

7.1.1 Type and Operational Aspects

- MSA Combustible Gas/Oxygen Meter Model 260
  - Principle of Operation
    - Oxygen detector uses an electrochemical sensor; produces a minute electric current proportional to the oxygen content.
    - Combustible gas indicators use a combustion chamber containing a filament that ignites flammable vapors; filament is heated or coated with a catalyst (platinum) to facilitate combustion.
    - Filament is part of a balanced resistor circuit; combustion in the chamber causes the filament temperature to increase; results in increased filament resistance.
    - Change in the filament's resistance causes an imbalance in the circuit proportional to the percent of the lower explosive limit (% LEL).
    - Concentrations greater than the LEL and lower than the upper explosive limit (UEL) will read 100% LEL; combustible atmosphere present.
    - Concentrations greater than the UEL will read above 100% LEL then return to zero. (NOTE: Some devices have catchment mechanisms which will cause the needle to remain at 100% until the meter is reset.) This type of response indicates the gas mixture

is too rich to burn and is not combustible. The danger is that the addition of air to the gas mixture could bring it into the flammable range (less than the UEL).

- Oxygen meter set at the factory to alarm at 19.5% (oxygen deficient atmosphere) combustible gas meter set by the user to alarm at 10% LEL.

7.1.2 Calibration Methods/Frequencies

Before the calibration of the combustible gas indicator can be checked, the Model 260 must be in operating condition. The Model 260 combustible gas indicator is normally calibrated on pentane as being representative of the flammability characteristics of most commonly encountered combustible gases. The meter scale is calibrated from zero to 100% LEL, which corresponds in actual volume concentrations of 0 to approximately 14% pentane in air. A booklet of response curves is supplied with the Model 260. These curves may be used to interpret meter readings when sampling combustible gases other than pentane.

It is recommended that calibration be checked before and after using each time. The SSO will record and log such calibration information into an air monitoring notebook. The O_2 meter is calibrated by adjusting the O_2 control knob to 20.8% while the meter is operated in a fresh air atmosphere.

7.1.3 Preventative Maintenance

The primary maintenance of the Model 260 is the rechargeable 2.4 volt nickel cadmium battery. Recommended charging time is 16 hours. It may be left on charge for longer periods without damaging the battery. The battery sometimes will not supply full power capacity after repeated partial use between charging. Therefore, it is recommended that the battery be exercised at least once a month by running for eight to 10 hours and recharged. If the instrument has not been used for 30 days, the battery should be charged prior to use.

7.2 PHOTOIONIZATION DETECTOR (PID)

A PID will be used to monitor total ionizable organic content of the ambient air. A PID will prove useful as a direct reading instrument to aid in determining if respiratory protection needs to be upgraded and to define the EZ. (Note: PID readings do not always indicate the actual air concentration of a compound. Consult the manual, HNU, or the CIH for clarification.)

The SSO will take measurements before operations begin in an area to determine the amount of organic compounds naturally occurring in the air. This is referred to as a background level.

Levels of volatile organic compounds will be measured in the air at active work sites once every hour and at the support zone once every hour when levels are detected above background in the exclusion zone. If levels exceed background at any time in the support zone, work in the exclusion zone will cease and corrective actions will be taken, e.g., cover soil with polyethylene sheeting. Work will not resume until levels reach background in the support zone.

7.2.1 Type and Operational Aspects

- PID Model PI 101
  - Principle of Operation
    - Ionization potential (IP) - The energy required to remove the outermost electron from a molecule; measured in electron volts (eV); characteristic property of a specific chemical.
    - Photoionization - Using ultraviolet (UV) light to remove the outermost electron from a molecule.
    - Energy of UV light (10.2, 9.5, 11.7 eV) must be equal to or greater than the IP to photoionize the molecule.
    - Fan or pump is used to draw air into the detector where the contaminants are exposed to a UV light source (lamp).
    - Ions are collected on a charged plate and produce a current directly proportional to the number of ionized molecules; current is amplified and displayed on the meter.

7.2.2 Calibration Method/Frequencies

The PID Model PI 101 is designed for trace gas analysis in ambient air and is calibrated at HNU with certified standards of benzene, vinyl chloride, and isobutylene. Other optional calibrations are available (e.g., ammonia, ethylene oxide, H_2S, etc.).

OHM will use a PID with a 10.2 eV lamp. This lamp has been determined to be most responsive to the contaminants on site. Optional probes containing lamps of 9.5 and 11.7 eV are interchangeable in use within individual read-out assemblies for different applications.

The approximate span settings for the probe that would give different readings of the amounts of trace gas of a particular species in a sample are based upon the relative photoionization sensitivities of various gases twice daily (beginning and end of shift).

It is recommended that calibration be checked twice each day (beginning and end of shift). The SSO will record and log such calibration information into an air monitoring notebook.

7.2.3 Preventative Maintenance

Maintenance of the PID Model PI 101 consists of cleaning the lamp and ion chamber, and replacement of the lamp or other component parts or sub-assemblies.

7.3 AIR MONITORING LOG

The SSO will ensure that all air-monitoring data is logged into a monitoring notebook. Data will include instrument used, wind direction, work process, etc. The Program CIH or his designated representative will periodically review this data.

7.4 CALIBRATION REQUIREMENTS

The PID, LEL/O_2 meter and sampling pumps required with fixed-media air sampling will be calibrated daily before and after use. A separate log will be kept detailing date, time, span gas, or other standard, and name of person performing the calibration.

7.5 AIR MONITORING RESULTS

Air monitoring results will be posted for personnel inspection, and will be discussed during morning safety meetings.

8.0 EMERGENCY RESPONSE

8.1 PRE-EMERGENCY PLANNING

Prior to engaging in construction/remediation activities at the site, OHM will plan for possible emergency situations and have available adequate supplies and manpower to respond. In addition site personnel will receive training during the site orientation concerning proper emergency response procedures.

The following situations would warrant implementation of the Emergency Response and Contingency Plan (ERCP):

Fire/Explosion	• The potential for human injury exists. • Toxic fumes or vapors are released. • The fire could spread on site or off site and possibly ignite other flammable materials or cause heat-induced explosions. • The use of water and/or chemical fire suppressants could result in contaminated run-off. • An imminent danger of explosion exists.
Spill or Release of Hazardous Materials	• The spill could result in the release of flammable liquids or vapors, thus causing a fire or gas explosion hazard. • The spill could cause the release of toxic liquids or fumes in sufficient quantities or in a manner that is hazardous to or could endanger human health.
Natural Disaster	• A rain storm exceeds the flash flood level. • The facility is in a projected tornado path or a tornado has damaged facility property. • Severe wind gusts are forecasted or have occurred and have caused damage to the facility.
Medical Emergency	• Overexposure to hazardous materials. • Trauma injuries (broken bones, severe lacerations/bleeding, burns). • Eye/skin contact with hazardous materials. • Loss of consciousness. • Heat stress (Heat stroke). • Cold stress (Hypothermia). • Heart attack. • Respiratory failure. • Allergic reaction.

The following measures will be taken to assure the availability of adequate equipment and manpower resources:

- Sufficient equipment and materials will be kept on site and dedicated for emergencies only. The inventory will be replenished after each use.

- On-site emergency responders will be current in regards to training and medical surveillance programs. Copies of all applicable certificates will be kept on file for on-site personnel required to respond.

- It will be the responsibility of the emergency coordinator to brief the on-site response team on anticipated hazards at the site. The emergency coordinator shall also be responsible for anticipating and requesting equipment that will be needed for response activities.

- Emergency response activities will be coordinated with the Local Emergency Management Agency (EMA) in compliance with SARA Title III requirements.

Communications will be established prior to commencement of any activities at the remediation site. Communication will be established so that all responders on site have availability to all pertinent information to allow them to conduct their activities in a safe and healthful manner. The primary communication device will be two-way radios. Air horns may be used to alert personnel of emergency conditions. A telephone will be located at the command post to summon assistance in an emergency.

Primary communication with local responders in the event of an emergency will be accomplished using commercial telephone lines.

8.2 EMERGENCY RECOGNITION AND PREVENTION

Because unrecognized hazards may result in emergency incidents, it will be the responsibility of the Site Supervisor and Site Safety Officer (SSO), through daily site inspections and employee feedback (Safety Observation Program, daily safety meetings, and job safety analyses) to recognize and identify all hazards that are found at the site. These may include:

Chemical Hazards	• Materials at the site • Materials brought to the site
Physical Hazards	• Fire/explosion • Slip/trip/fall • Electrocution • Confined space • IDLH atmospheres • Excessive noise
Mechanical Hazards	• Heavy equipment • Stored energy system • Pinch points • Electrical equipment • Vehicle traffic
Environmental Hazards	• Electrical Storms • High winds • Heavy Rain/Snow • Temperature Extremes (Heat/Cold Stress) • Poisonous Plants/Animals

Once a hazard has been recognized, the Site Supervisor and/or the SSO will take immediate action to prevent the hazard from becoming an emergency. This may be accomplished by the following:

- Daily safety meeting
- Task-specific training prior to commencement of activity
- Lock-out/tag-out
- Personal Protective Equipment (PPE) selection/use
- Written and approved permits for hot work, confined space

- Trenching/shoring procedure
- Air monitoring
- Following all OHM standard operating procedures
- Practice drills for fire, medical emergency, and hazardous substances spills

TABLE 8.1
EMERGENCY TELEPHONE NUMBERS

Local Agencies -- Bainbridge, MD	9-1-1
Fire Department	non-emergency - 410-378-4133
Police	non-emergency - 410-378-2129
Sheriff's Office	410-398-3344
Hartford Memorial Hospital, 510 South Union Avenue, Havre de Grace, MD *Directions:* From Bainbridge proceed to US Rt 40 South; cross the bridge into Havre de Grace; at first light turn LEFT, at bottom of hill stop light, turn RIGHT on Juliana St; proceed to next light, turn LEFT on Revolution Avenue; Hospital is at next light; intersection of Revolution and Union Aves. See Hospital Map (next page)	410-939-2400
Regional Poison Control Center	800-552-6337
State Agencies	
Maryland Dept of the Environment	800-633-6101
Federal Agencies	
EPA Region Branch Response Center	215-597-9800
Agency for Toxic Substances and Disease Registry	404-639-0615 (24 HR)
POC/Engineer in Charge	
Frank Zepka	202-685-3279
U.S. Coast Guard	804-484-8192
National Response Center	800-424-8802
OHM Personnel	
Project Manager - Larry Stearns	412-963-2300
Director, Health and Safety - Kevin McMahon	609-588-6375
District Health & Safety Manger - Bob Brooks	609-588-6423
OHM Corporation (24 hour)	800-537-9540
Additional Phone #'s in Section 2 this HASP	

8.3 PERSONNEL ROLES, LINES OF AUTHORITY, AND COMMUNICATIONS

This section of the ERCP describes the various roles, responsibilities, and communication procedures that will be followed by personnel involved in emergency responses.

The primary emergency coordinator for this site is the Site Supervisor. In the event an emergency occurs and the emergency coordinator is not on site, the Site Safety Officer or the highest ranking employee on site will serve as the emergency coordinator until he arrives. The emergency coordinator will determine the nature of the emergency and take appropriate action as defined by this ERCP.

The emergency coordinator will implement the ERCP immediately as required. The decision to implement the plan will depend upon whether the actual incident threatens human health or the environment.

LEGEND

- State Route
- Geo Feature
- Town, Small City
- Interstate, Turnpike
- US Highway
- unty Boundary
- Population Center
- Street, Road
- Hwy Ramp
- Major Street/Road
- Interstate Highway
- State Route
- US Highway
- Railroad
- River
- Land Mass
- Open Water

Scale 1:62,500 (at center)

1 Miles

2 KM

Hospital Route Map
Mag 13.00
Wed Feb 12 11:26:53 1997

Immediately after being notified of an emergency incident, the emergency coordinator or his designee will evaluate the situation to determine the appropriate action.

8.3.1 Responsibilities and Duties

This section describes the responsibilities and duties assigned to the emergency coordinator.

It is recognized that the structure of the "Incident Command System" will change as additional response organizations are added. OHM will follow procedures as directed by the fire department, LEPC, State and Federal Agencies as required. OHM will defer to the local Fire Department chief to assume the role of Incident Commander upon arriving on site. Additional on-site personnel may be added to the Site Emergency Response Team as required to respond effectively.

8.3.2 On-Site Emergency Coordinator Duties

The on-site emergency coordinator is responsible for implementing and directing the emergency procedures. All emergency personnel and their communications will be coordinated through the emergency coordinator. Specific duties are as follows:

- Identify the source and character of the incident, type and quantity of any release. Assess possible hazards to human health or the environment that may result directly from the problem or its control.
- Discontinue operations in the vicinity of the incident if necessary to ensure that fires, explosions, or spills do not recur or spread to other parts of the site. While operations are dormant, monitor for leaks, pressure build-up, gas generation, or ruptures in valves, pipes, or other equipment, where appropriate.
- Notify local Emergency Response Teams if their help is necessary to control the incident. Table 8.1 provides telephone numbers for emergency assistance.
- Direct on-site personnel to control the incident until, if necessary, outside help arrives.
- Ensure that the building or area where the incident occurred and the surrounding area are evacuated and shut off possible ignition sources, if appropriate. The Emergency Response Team is responsible for directing site personnel such that they avoid the area of the incident and leave emergency control procedures unobstructed.
- If fire or explosion is involved, notify facility Fire Department.
- Notify NAVY ROICC
- Notify OHM Project Manager
- Have protected personnel, in appropriate PPE, on standby for rescue.

If the incident may threaten human health or the environment outside of the site, the emergency coordinator should immediately determine whether evacuation of area outside of the site may be necessary and, if so, notify the Police Department and the Office of Emergency Management.

When required, notify the National Response Center. The following information should be provided to the National Response Center:

- Name and telephone number
- Name and address of facility
- Time and type of incident
- Name and quantity of materials involved, if known
- Extent of injuries
- Possible hazards to human health or the environment outside of the facility.

The emergency telephone number for the National Response Center is 800-424-8802.

If hazardous waste has been released or produced through control of the incident, ensure that:

- Waste is collected and contained.
- Containers of waste are removed or isolated from the immediate site of the emergency.
- Treatment or storage of the recovered waste, contaminated soil or surface water, or any other material that results from the incident or its control is provided.
- Ensure that no waste that is incompatible with released material is treated or stored in the facility until cleanup procedures are completed.
- Ensure that all emergency equipment used is decontaminated, recharged, and fit for its intended use before operations are resumed.
- Notify the USEPA Regional Administrator that cleanup procedures have been completed and that all emergency equipment is fit for its intended use before resuming operations in the affected area of the facility. The USEPA Regional Administrator's telephone number is included in the Emergency Contacts.
- Record time, date, and details of the incident, and submit a written report to the USEPA Regional Administrator. Report is due to USEPA within 15 days of the incident.

8.4 SAFE DISTANCES AND PLACES OF REFUGE

The emergency coordinator for all activities will be the SS. No single recommendation can be made for evacuation or safe distances because of the wide variety of emergencies which could occur. Safe distances can only be determined at the time of an emergency based on a combination of site and incident-specific criteria. However, the following measures are established to serve as general guidelines.

In the event of minor hazardous materials releases (small spills of low toxicity), workers in the affected area will report initially to the contamination reduction zone. Small spills or leaks (generally less than 55 gallons) will require initial evacuation of at least 50 feet in all directions to allow for cleanup and to prevent exposure. After initial assessment of the extent of the release and potential hazards, the emergency coordinator or his designee will determine the specific boundaries for evacuation. Appropriate steps such as caution tape, rope, traffic cones, barricades, or personal monitors will be used to secure the boundaries.

In the event of a major hazardous material release (large spills of high toxicity/greater than 55 gallons), workers will be evacuated from the building/site. Workers will assemble at the entrance to the site for a head count by their foremen and to await further instruction.

If an incident may threaten the health or safety of the surrounding community, the public will be informed and, if necessary, evacuated from the area. The emergency coordinator, or his designee will inform the proper agencies in the event that this is necessary. Telephone numbers are listed in Table 8.1.

Places of refuge will be established prior to the commencement of activities. These areas must be identified for the following incidents:

- Chemical release
- Fire/explosion
- Power loss
- Medical emergency
- Hazardous weather

In general, evacuation will be made to the crew trailers, unless the emergency coordinator determines otherwise. It is the responsibility of the emergency coordinator to determine when it is necessary to evacuate personnel to off-site locations.

In the event of an emergency evacuation, all the employees will gather at the entrance to the site until a head count establishes that all are present and accounted for. No one is to leave the site without notifying the emergency coordinator.

8.5 EVACUATION ROUTES AND PROCEDURES

All emergencies require prompt and deliberate action. In the event of an emergency, it will be necessary to follow an established set of procedures. Such established procedures will be followed as closely as possible. However, in specific emergency situations, the emergency coordinator may deviate from the procedures to provide a more effective plan for bringing the situation under control. The emergency coordinator is responsible for determining which situations require site evacuation.

8.5.1 Evacuation Signals and Routes

Two-way radio communication and an air horn will be used to notify employees of the necessity to evacuate an area or building involved in a release/spill of a hazardous material. Each crew supervisor will have a two way radio. A base station will be installed in the OHM office trailer to monitor for emergencies. Total site evacuation will be initiated only by the emergency coordinator, however, in his absence, decision to preserve the health and safety of employees will take precedence. Evacuation routes will be posted in each outside work area. Signs inside buildings will be posted on walls or other structural element of a building. Periodic drills will be conducted to familiarize each employee with the proper routes and procedures.

8.5.2 Evacuation Procedures

In the event evacuation is necessary, the following actions will be taken:

- The emergency signal will be activated.

- No further entry of visitors, contractors, or trucks will be permitted. Vehicle traffic within the site will cease in order to allow safe exit of personnel and movement of emergency equipment.

- Shut off all machinery if safe to do so.
- ALL on-site personnel, visitors, and contractors in the support zone will assemble at the entrance to the site for a head count and await further instruction from the emergency coordinator.
- ALL persons in the exclusion zone and contamination reduction zone will be accounted for by their immediate crew leaders (e.g., foreman). Leaders will determine the safest exits for employees and will also choose an alternate exit if the first choice is inaccessible.
- During exit, the crew leader should try to keep the group together. Immediately upon exit, the crew leader will account for all employees in his crew.
- Upon completion of the head count, the crew leader will provide the information to the emergency coordinator.
- Contract personnel and visitors will also be accounted for.
- The names of emergency response team members involved will be reported to the emergency spill control coordinator.
- A final tally of persons will be made by the emergency coordinator or designee. No attempt to find persons not accounted for will involve endangering lives of OHM or other employees by re entry into emergency areas.
- In all questions of accountability, immediate crew leaders will be held responsible for those persons reporting to them. Visitors will be the responsibility of those employees they are seeing. Contractors and truck drivers are the responsibility of the Site Supervisor. The security guard will aid in accounting for visitors, contractors, and truckers by reference to sign-in sheets available from the guard shack.
- Personnel will be assigned by the emergency coordinator to be available at the main gate to direct and brief emergency responders.
- Re-entry into the site will be made only after clearance is given by the emergency coordinator. At his direction, a signal or other notification will be given for re-entry into the facility.
- Drills will be held periodically to practice all of these procedures and will be treated with the same seriousness as an actual emergency.

8.6 EMERGENCY SPILL RESPONSE PROCEDURES AND EQUIPMENT

In the event of an emergency involving a hazardous material spill or release, the following general procedures will be used for rapid and safe response and control of the situation. Emergency contacts found in Table 8.1 provide a quick reference guide to follow in the event of a major spill.

8.6.1 Notification Procedures

If an employee discovers a chemical spill or process upset resulting in a vapor or material release, he or she will immediately notify the on-site emergency coordinator.

On-site Emergency Coordinator will obtain information pertaining to the following:

- The material spilled or released.
- Location of the release or spillage of hazardous material.
- An estimate of quantity released and the rate at which it is being released.
- The direction in which the spill, vapor or smoke release is heading.
- Any injuries involved.
- Fire and/or explosion or possibility of these events.
- The area and materials involved and the intensity of the fire or explosion.

This information will help the on-site emergency coordinator to assess the magnitude and potential seriousness of the spill or release.

8.6.2 Procedure for Containing/Collecting Spills

The initial response to any spill or discharge will be to protect human health and safety, and then the environment. Identification, containment, treatment, and disposal assessment will be the secondary response.

If for some reason a chemical spill is not contained within a dike or sump area, an area of isolation will be established around the spill. The size of the area will generally depend on the size of the spill and the materials involved. If the spill is large (greater than 55 gallons) and involves a tank or a pipeline rupture, an initial isolation of at least 100 ft. in all directions will be used. Small spills (less than or equal to 55 gallons) or leaks from a tank or pipe will require evacuation of at least 50 ft. in all directions to allow cleanup and repair and to prevent exposure. When any spill occurs, only those persons involved in overseeing or performing emergency operations will be allowed within the designated hazard area. If possible the area will be roped or otherwise blocked off.

If the spill results in the formation of a toxic vapor cloud (by reaction with surrounding materials or by outbreak of fire) and its release (due to high vapor pressures under ambient conditions), further evacuation will be enforced. In general an area at least 500 feet wide and 1,000 feet long will be evacuated downwind if volatile materials are spilled. (Consult the DOT Emergency Response Guide for isolation distances for listed hazardous materials.)

If an incident may threaten the health or safety of the surrounding community, the public will be informed and possibly evacuated from the area. The on-site emergency coordinator will inform the proper agencies in the event this is necessary. (Refer to Table 8.1)

As called for in regulations developed under the Comprehensive Environmental Response Compensation Liability Act of 1980 (Superfund), OHM's practice is to report a spill of a pound or more of any hazardous material for which a reportable quantity has not been established and which is listed under the Solid Waste Disposal Act, Clean Air Act, Clean Water Act, or TSCA. OHM also follows the same practice for any substances not listed in the Acts noted above but which can be classified as a hazardous waste under RCRA.

Clean up personnel will take the following measures:

- Make sure all unnecessary persons are removed from the hazard area.
- Put on protective clothing and equipment.
- If a flammable material is involved, remove all ignition sources, and use spark and explosion proof equipment for recovery of material.

- Remove all surrounding materials that could be especially reactive with materials in the waste. Determine the major components in the waste at the time of the spill.

- If wastes reach a storm sewer, try to dam the outfall by using sand, earth, sandbags, etc. If this is done, pump this material out into a temporary holding tank or drums as soon as possible.

- Place all small quantities of recovered liquid wastes (55 gallons or less) and contaminated soil into drums for incineration or removal to an approved disposal site.

- Spray the spill area with foam, if available, if volatile emissions may occur.

- Apply appropriate spill control media (e.g. clay, sand, lime, etc.) to absorb discharged liquids.

- For large spills, establish diking around leading edge of spill using booms, sand, clay or other appropriate material. If possible, use diaphragm pump to transfer discharged liquid to drums or holding tank.

8.6.3 Emergency Response Equipment

The following equipment will be staged in the support zone and throughout the site, as needed, to provide for safety and first aid during emergency responses. (Emergency eyewash equipment meets ANSI Standard;

- ABC-type fire extinguisher
- First-aid kit, industrial size
- Eyewash/safety shower
- Emergency signal horn
- Self contained breathing apparatus (two)
- Stretcher/backboard

In addition to the equipment listed above, OHM maintains direct reading instrumentation that may be used in emergency situations to assess the degree of environmental hazard. This equipment will only be used by the Site Safety Officer or other specially trained personnel. This equipment will be stored, charged and ready for immediate use in evaluating hazardous chemical concentrations. The equipment will be located at the OHM office trailer.

EQUIPMENT NAME	APPLICATION
Portable H-NU Photoionization Meter	Measures selected inorganic and organic chemical concentrations
MSA Oxygen and Combustible Gas Meter	Measures oxygen and combustible gas levels

8.6.4 Personal Protective Equipment

A supply of two (minimum) SCBAs will be located in the support zone for use in emergency response to hazardous materials releases. They will be inspected at least monthly, according to OSHA requirements. In addition, all emergency response personnel will have respirators available for use with cartridge selection determined by the Site Safety Officer based on the results of direct reading instruments. Emergency response personnel will also be provided with protective clothing as warranted by the nature of the hazardous material and as directed by the Site Safety Officer.

8.6.5 Emergency Spill Response Clean-Up Materials and Equipment

A sufficient supply of appropriate emergency response clean-up and personal protective equipment will be inventoried and inspected, visually, on a weekly basis.

The materials listed below may be kept on site for spill control, depending on the types of hazardous materials present on site. The majority of this material will be located in the support zone, in a supply trailer or storage area. Small amounts will be placed on pallets and located in the active work areas.

- Sand or clay to solidify/absorb liquid spills.
- Activated charcoal (carbon) to adsorb organic solvents (hydrocarbons) and to reduce flammable vapors.

The following equipment will be kept on site and dedicated for spill cleanup:

- Plastic shovels for recovering corrosive and flammable materials.
- Sausage-shaped absorbent booms for diking liquid spills, drains, or sewers.
- Sorbent sheets (diapers) for absorbing liquid spills.
- Overpack drums for containerizing leaking drums.
- 55-gallon open-top drums for containerization of waste materials.

*NOTE: All contaminated soils, absorbent materials, solvents and other materials resulting from the clean-up of spilled or discharged substances shall be properly stored, labeled, and disposed of off-site.

8.7 EMERGENCY CONTINGENCY PLAN

This section of the ERCP details the contingency measures OHM will take to prepare for and respond to fires, explosions, spills and releases of hazardous materials, hazardous weather, and medical emergencies.

8.8 MEDICAL EMERGENCY CONTINGENCY MEASURES

The procedures listed below will be used to respond to medical emergencies. The SSO will contact the local hospital and inform them of the site hazards and potential emergency situations. A minimum of two First-Aid/CPR trained personnel will be maintained on site.

8.8.1 Response

The nearest workers will immediately assist a person who shows signs of medical distress or who is involved in an accident. The work crew supervisor will be summoned.

The work crew supervisor will immediately make radio contact with the on-site emergency coordinator to alert him of a medical emergency situation. The supervisor will advise the following information:

- Location of the victim at the work site
- Nature of the emergency
- Whether the victim is conscious
- Specific conditions contributing to the emergency, if known

The Emergency Coordinator will notify the Site Safety Officer. The following actions will then be taken depending on the severity of the incident:

- Life-Threatening Incident — If an apparent life-threatening condition exists, the crew supervisor will inform the emergency coordinator by radio, and the local Emergency Response Services (EMS) will be immediately called. An on-site person will be appointed who will meet the EMS and have him/her quickly taken to the victim. Any injury within the EZ will be evacuated by OHM personnel to a clean area for treatment by (EMS) personnel. No one will be able to enter the EZ without showing proof of training, medical surveillance and site orientation.

- Non Life-Threatening Incident — If it is determined that no threat to life is present, the Site Safety Officer will direct the injured person through decontamination procedures (see below) appropriate to the nature of the illness or accident. Appropriate first aid or medical attention will then be administered.

*NOTE: The area surrounding an accident site must not be disturbed until the scene has been cleared by the Site Safety Officer.

Any personnel requiring emergency medical attention will be evacuated from exclusion and contamination reduction zones if doing so would not endanger the life of the injured person or otherwise aggravate the injury. Personnel will not enter the area to attempt a rescue if their own lives would be threatened. The decision whether or not to decontaminate a victim prior to evacuation is based on the type and severity of the illness or injury and the nature of the contaminant. For some emergency victims, immediate decontamination may be an essential part of life-saving first aid. For others, decontamination may aggravate the injury or delay life-saving first aid. Decontamination will be performed if it does not interfere with essential treatment.

If decontamination can be performed, observe the following procedures:

- Wash external clothing and cut it away.

If decontamination cannot be performed, observe the following procedures:

- Wrap the victim in blankets or plastic to reduce contamination of other personnel.

- Alert emergency and off-site medical personnel to potential contamination, instruct them about specific decontamination procedures.

- Send site personnel familiar with the incident and chemical safety information, e.g. MSDS, with the affected person.

All injuries, no matter how small, will be reported to the SSO or the Site Supervisor. An accident/injury/illness report will be completely and properly filled out and submitted to the Regional Health and Safety Director/Project CIH, in accordance with OHM's reporting procedures.

A list of emergency telephone numbers is given in Table 8.1.

8.8.2 Notification

The following personnel/agencies will be notified in the event of a medical emergency:

- Local Fire Department or EMS
- On-site Emergency Coordinator
- Workers in the affected areas
- Navy POC/Engineer in Charge

8.9 FIRE CONTINGENCY MEASURES

OHM personnel and subcontractors are not trained professional firefighters. Therefore, if there is any doubt that a fire can be quickly contained and extinguished, personnel will notify the emergency coordinator by radio and vacate the structure or area. The emergency coordinator will immediately notify the local Fire Department.

The following procedures will be used to prevent the possibility of fires and resulting injuries:

- Sources of ignition will be kept away from where flammable materials are handled or stored.
- The air will be monitored for explosivity before and during hot work and periodically where flammable materials are present. Hot work permits will be required for all such work.
- "No smoking" signs will be conspicuously posted in areas where flammable materials are present.
- Fire extinguishers will be placed in all areas where a fire hazard may exist.
- Before workers begin operations in an area the foreman will give instruction on egress procedures and assembly points. Egress routes will be posted in work areas and exit points clearly marked.

8.9.1 Response

The following procedures will be used in the event of a fire:

- Anyone who sees a fire will notify their supervisor who will then contact the Emergency Coordinator by radio. The emergency coordinator will activate the emergency air horns and contact the local Fire Department.
- When the emergency siren sounds, workers will disconnect electrical equipment in use (if possible) and proceed to the nearest fire exit.
- Work crews will be comprised of pairs of workers (buddy system) who join each other immediately after hearing the fire alarm and remain together throughout the emergency. Workers will assemble at a predetermined rally point for a head count.
- When a small fire has been extinguished by a worker, the emergency coordinator will be notified.

8.10 HAZARDOUS WEATHER CONTINGENCY MEASURES

Operations will not be started or continued when the following hazardous weather conditions are present:

- Lightning
- Heavy Rains/Snow
- High Winds

8.10.1 Response

- Excavation/soil stock piles will be covered with plastic liner.
- All equipment will be shut down and secured to prevent damage.
- Personnel will be moved to safe refuge, initially crew trailers. The emergency coordinator will determine when it is necessary to evacuate personnel to off-site locations and will coordinate efforts with fire, police and other agencies.

8.10.2 Notification

The emergency coordinator will be responsible for assessing hazardous weather conditions and notifying personnel of specific contingency measures. Notifications will include:

- OHM employees and subcontractors
- Navy POC/Engineer in Charge
- Local Emergency Management Agency

8.11 SPILL/RELEASE CONTINGENCY MEASURES

In the event of release or spill of a hazardous material the following measures will be taken:

8.11.1 Response

Any person observing a spill or release will act to remove and/or protect injured/contaminated persons from any life-threatening situation. First aid and/or decontamination procedures will be implemented as appropriate.

First aid will be administered to injured/contaminated personnel. Unsuspecting persons/vehicles will be warned of the hazard. All personnel will act to prevent any unsuspecting persons from coming in contact with spilled materials by alerting other nearby persons. Attempt to stop the spill at the source, if possible. Without taking unnecessary risks, personnel will attempt to stop the spill at the source. This may involve activities such as uprighting a drum, closing a valve or temporarily sealing a hole with a plug.

Utilizing radio communications, the emergency coordinator will be notified of the spill/release, including information on material spilled, quantity, personnel injuries and immediate life threatening hazards. Air monitoring will be implemented by the emergency coordinator and SSO to determine the potential impact on the surrounding community. Notification procedures will be followed to inform on-site personnel and off-site agencies. The emergency coordinator will make a rapid assessment of the spill/release and direct confinement, containment and control measures. Depending upon the nature of the spill, measures may include:

- Construction of a temporary containment berm utilizing on-site clay absorbent earth
- Digging a sump, installing a polyethylene liner and
- Diverting the spill material into the sump placing drums under the leak to collect the spilling material before it flows over the ground
- Transferring the material from its original container to another container

The emergency coordinator will notify the POC/Engineer in Charge of the spill and steps taken to institute clean-up. Emergency response personnel will clean-up all spills following the spill clean-up plan developed by the emergency coordinator. Supplies necessary to clean up a spill will be immediately available on-site. Such items may include, but are not limited to:

- Shovel, rake
- Clay absorbent
- Polyethylene liner
- Personal safety equipment
- Steel drums
- Pumps and miscellaneous hand tools

The major supply of material and equipment will be located in the Support Zone. Smaller supplies will kept at active work locations. The emergency coordinator will inspect the spill site to determine that the spill has been cleaned up to the satisfaction of the POC/Engineer in Charge. If necessary, soil, water or air samples may be taken and analyzed to demonstrate the effectiveness of the spill clean-up effort. The emergency coordinator will determine the cause of the spill and determine remedial steps to ensure that recurrence is prevented. The emergency coordinator will review the cause with the POC/Engineer in Charge and obtain his concurrence with the remedial action plan.

9.0 TRAINING REQUIREMENTS

As a requirement for work at this site, in any hazardous waste work area, all field personnel will be required to take a 40-hour training class. This training must cover the requirements in 29 CFR 1910.120: personal protective equipment, toxicological effects of various chemicals, hazard communication, bloodborne pathogens, handling of unknown tanks and drums, confined-space entry procedures, electrical safety, etc. In addition, all personnel must receive annual 8-hour refresher training and three day on-site training under a trained, experienced supervisor. Supervisory personnel shall have received an additional 8-hour training in handling hazardous waste operations.

All personnel entering the exclusion zone will be trained in the provisions of this site safety plan and be required to sign the Site Safety Plan Acknowledgment in Appendix A.

Site-specific training for the Naval Training Center, Bainbridge, Maryland site, which will include potential site contaminants, Hazard Communication as per 29 CFR 1910.1200, site physical and environmental hazards, emergency response and evacuation procedures, and emergency telephone numbers will be held at the site location by the SS and SSO before any site work activities begin.

Outlines of the orientation for OHM / OHM sub-contract personnel and visitors are presented below:

9.1 SITE ORIENTATION

OHM/SUBCONTRACTORS

a. HASP sign off
b. Sign in/out procedures
c. Site background
d. Chain of command
e. Rules and regulations
f. Hours of work
g. Absences
h. Equipment
I. Emergency Information
   - Emergency signal
   - Gathering point
   - Responsibilities/roles
   - Emergency phone numbers
j. Contaminants and Material Safety Data Sheets (MSDS) [Hazard Communication Program]
k. JSAs (Phase Safety Plans)
l. Forms, site-specific

VISITOR ORIENTATION

a. Sign in/out procedures
b. Observation platform safety
c. Review of Site map
d. Work Zones in progress
e. Hazard Communication
f. Emergency plan/signals
g. Training/medical requirements
h. Zones/areas open to visitors

10.0 MEDICAL SURVEILLANCE PROGRAM

All OHM personnel participate in a medical and health monitoring program. This program is initiated when the employee starts work with a complete physical and medical history and is continued on a regular basis. A listing of OHM's worker medical profile is shown below. This program was developed in conjunction with a consultant toxicologist and OHM's occupational health physician. Other medical consultants are retained when additional expertise is required.

The medical surveillance program meets the requirements of the OSHA Standard 29 CFR 1910.120 (f).

TABLE 10.1
WORKER MEDICAL PROFILE

Item	Initial	Annual
Medical History	X	X
Work History	X	X
Visual Acuity and Tonometry	X	X
Pulmonary Function Tests	X	X
Physical Examination	X	X
Audiometry Tests	X	X
Chest X-Ray	X	X
Complete Blood Counts	X	X
Blood Chem. (SSAC-23 or equivalent)	X	X
Urinalysis	X	X
Dermatology Examination	X	X
Electrocardiogram/Stress Test	X	X (based on age)

No specific tests are required for this project.

10.1 EXAMINATION SCHEDULE

Employees are examined initially upon start of employment, annually thereafter, and may be examined upon termination of employment. Unscheduled medical examinations are conducted:

- At employee request after known or suspected exposure to toxic or hazardous materials
- At the discretion of the client, the CIH, SSO, or OHM occupational physician after known or suspected exposure to toxic or hazardous materials
- At the discretion of the OHM occupational physician

All nonscheduled medical examinations will include, as a minimum, all items specified above for periodic surveillance examination, with the exception of the chest X-ray, which will be conducted at the discretion of the occupational physician performing the examination.

APPENDIX A
HEALTH AND SAFETY PLAN CERTIFICATION

EA

By signing this document, I a
Remediation Services Corp. per ne

REPRESENTING	NA E (
OAM Corp.	LA

APPENDIX A
HEALTH AND SAFETY PLAN CERTIFICA

APPENDIX B
OHM HAZARD COMMUNICATION PROGRAM

APPENDIX B
OHM HAZARD COMMUNICATION PROGRAM

1. OBJECTIVE

A Site Specific Hazard Communication (Employee Right-To-Know) Program will be instituted at the Naval Training Center (NTC), Bainbridge, Maryland.

2. PURPOSE

The purpose of Hazard Communication (Employee Right-to-Know) is to ensure that the hazards of all chemicals located at field project sites, shops, and facilities are transmitted (communicated), according to 29 CFR 1910.1200 and 29 CFR 1926.59 to all OHM personnel and OHM subcontractors.

3. GENERAL REQUIREMENTS

3.1 It is the responsibility of site supervisors, shop supervisors, and facilities managers to ensure that the Hazard Communication Program for the area under their supervision is updated as necessary.

3.2 Container Labeling — OHM personnel will ensure that all drums and containers are labeled according to contents. These drums and containers will include those from manufacturers and those produced by on site operations. All incoming and outgoing labels shall be checked for identity, hazard warning, and name and address of responsible party.

3.3 Material Safety Data Sheets (MSDSs) — There will be an MSDS located on site for each hazardous chemical known to exist or which is being used on site. All MSDSs will be located in the site health and safety plan which can be found in the office trailer. MSDS's for products in use may be stored in a separate binder.

3.4 Employee Information and Site Specific Training — Training employees on chemical hazards is accomplished through an ongoing corporate and regional training program. Additionally, chemical hazards will be communicated to employees through daily safety meetings held at the project and by an initial site orientation program.

3.5 OHM employees will be instructed on the following:

- Chemicals and their hazards in the work area
- How to prevent exposure to these hazardous chemicals
- What the company has done to prevent workers' exposure to these chemicals
- Procedures to follow if they are exposed to these chemicals
- How to read and interpret labels and MSDSs for hazardous substances
- Emergency spill procedures
- Proper storage and labeling

3.6 Before any new hazardous chemical is introduced on site, each employee will be given information in the same manner as during the initial safety class. The site supervisor will be responsible for seeing that the MSDS on the new chemical is available. During the mandatory morning safety briefing, information on each new chemical will be presented.

Should any new chemical be brought on site, the appropriate MSDSs will be added and reviewed with the employees.

1. GENERAL

The following written Hazard Communication Program has been established for OHM Remediation Services Corp. (OHM). The purpose of this program is to transmit information to the workers about the chemical hazards in the work place using various media. The transmittal of information will be accomplished by means of a comprehensive Hazard Communication Program, which will include container labeling and other forms of warning, material safety data sheets (MSDSs), and employee training in accordance with 29 CFR 1910.1200 and 29 CFR 1926.59.

Upon mobilization at the job site the Hazard Communication Program will be reviewed with all employees. Upon reading the Hazard Communication Program employees will be asked to sign the "Worker Hazard Communication Acknowledgment Form". The Hazard Communication Program will also be reviewed with new employees and visitors as they arrive on site. These persons will also be asked to sign the acknowledgment form. The Hazard Communication Program shall be available for review by anyone on site any time during normal work hours. OHM will accomplish the hazard communication requirements through formal safety training, departmental safety meetings, and job-site safety meetings.

The Health and Safety Department shall update the Hazard Communication Program when personnel responsibilities change, a new non-routine task is introduced, or an extremely hazardous material needs particular attention. This new program will then be distributed throughout the company.

2. RESPONSIBILITIES

Overall responsibility for compliance with the Site Specific Hazard Communication Program rests with the site supervisor. A brief outline of responsibilities for those persons directly involved with the program will follow. These responsibilities are not all inclusive, but are designed to give guidance in initial and long-term program development. Since each area is different, these responsibilities may vary.

This program is intended to cover those employees who are directly involved with the handling of hazardous chemicals or supervision of activities that involve the use of hazardous chemicals.

2.1 Health and Safety Department Responsibilities

- Review operations with site supervisors to determine what tasks require hazard communication training.
- Advise supervisory people as to which materials may need to be considered hazardous initially and eventually to ensure that hazard task determination is being done according to the written policy.
- Follow up through safety meetings and safety audits to ensure that supervisors are carrying out prescribed company policy.
- Notify supervisors immediately of any operating changes affecting the hazardous chemicals being used.

2.2 Training Department Responsibilities

- Ensure that up-to-date records are maintained on training of all employees required to handle hazardous chemicals. The supervisor should keep copies of these records and should also send copies of the initial training to the corporate training secretary for the training file.
- Educate personnel upon initial 40-hour OSHA training to the requirements of the Hazard Communication Standard.

2.3 Site Supervisors' Responsibilities

- Identify jobs requiring the use of hazardous chemicals and develop a list of those jobs and chemicals.
- Provide the training required by the Hazard Communication Standard and document training of employees in the safe handling of hazardous chemicals.
- Ensure inspection of engineering controls and personal protective equipment before each use. The health and safety department shall help determine a suitable inspection plan for each application as needed.
- Make daily surveys of the work area to ensure that safe practices are being followed. Advise employees of and document unsafe work practices on the first occasion and consider further unsafe work practices as disciplinary violations. Use documentation as topics of safety meetings.
- Ensure required labeling practices are being followed. Labels should be affixed to the container when it arrives. If the contents are transferred to another container, then all label information (manufacturer, manufacturer's telephone number, product name, target organ(s) and product number) must also be affixed to the new container, so that all containers of the material, regardless of size, are labeled. Contact the health and safety department for proper labels.
- Enforce all applicable safety and health standards through periodic documented audits.
- Before ordering a material, determine if a MSDS exists on file. Request a MSDS from the manufacturer for all new products.

2.4 Employee Responsibilities

- Read and understand entire Site Specific Hazard Communication Program.
- Obey established safety rules and regulations.
- Use all safety procedures and personal protective equipment as required by company procedures.
- Notify supervisor of the following:
  - Any symptoms or unusual effects that may be related to the use of hazardous chemicals.
  - Any missing, incomplete, or unreadable labels on containers.
  - Missing, damaged, or malfunctioning safety equipment.
- Use approved labels on containers; do not remove labels (labels are available from the health and safety department).
- Use only approved containers for hazardous chemicals. (Is chemical and container compatible and appropriate?)
- Know where emergency equipment and first-aid supplies are located.
- Know location of MSDSs. These will be located in the break/decon area and the job-site office trailer.
- Know what you are expected to do in case of an emergency. Before the commencement of any task, emergency considerations shall be made.

2.5 Shipping/Receiving Personnel Responsibilities

- The Project Accountant (PA) or other persons assigned by the site supervisor shall ensure MSDSs are received with initial shipment of a hazardous chemical; if not, contact purchasing to request the appropriate MSDS and also call the health and safety department to determine if there is a MSDS available until the requested MSDS arrives.
- Ensure labels with required information are affixed to all containers.
- Store hazardous materials in designated locations.
- Use proper personal protective equipment when handling hazardous chemicals.
- Report damaged containers or spills to the site supervisor and the site safety officer immediately.

3. HAZARD DETERMINATION

OHM will rely on MSDSs from chemical suppliers and manufacturers to meet hazard determination requirements. Other relevant data from laboratory analyses, chemical reference materials, and chemical manufacturers' written evaluation procedures will be utilized when warranted. No other method shall be used to determine a chemicals' hazards unless approved by the health and safety department.

4. LABELING

The site supervisor will be responsible for seeing that all containers arriving at OHM job sites are properly and clearly labeled. Site supervisors shall also check all labels for chemical identity and appropriate hazard warnings. If the hazardous chemical is regulated by OSHA in a substance specific health standard (29 CFR 1910), the site supervisor shall ensure that the labels or other forms of warning used are in accordance with the requirements of that standard. Any container that is not labeled shall be immediately labeled after initial discovery with the required information.

The site supervisor or Team Leader shall be responsible for seeing that all portable containers used in their work area are properly labeled with chemical identity and hazard warning. (Refer to MSDS for required labeling information.)

The site supervisor or Team Leader shall also ensure that labels on hazardous chemical containers are not removed or defaced unless the container is immediately marked with the required information and that all labels are legible in English and prominently displayed on the container or readily available in the work area throughout each shift.

If any container is found and the contents cannot be identified, the site supervisor shall be contacted immediately. When proper identification is made, a label shall be affixed to the container immediately. If it is discovered that no MSDS is available, the manufacturer and the health and safety department shall be contacted to assist in locating the proper MSDS. If there is no means of identifying the material in the container, the container shall be taken out of service, away from all personnel until it can be tested by the health and safety department or laboratory personnel. The site supervisor shall communicate their findings or awareness of such containers to all personnel working in the area and to the district health and safety manager.

5. MATERIAL SAFETY DATA SHEETS (MSDS)

The site supervisor at the job site will be responsible for maintaining a current MSDS relevant to the hazardous chemicals used on their job sites. The health and safety department will be responsible for compiling the initial MSDS file for the job site and aiding all job sites with the completion and maintenance of their respective MSDS files.

All MSDSs shall be readily available for review by all employees during each work shift. Each job site will designate a clearly marked "Employee Right-to-Know" station where employees can immediately obtain a MSDS and the required information in an emergency. MSDSs shall also be made available, upon request, to designated OHM representatives, other employer's employees, and to any OSHA inspector in accordance with the requirements of 29 CFR 1910.1200(e).

Although manufacturers are required to provide employers with MSDSs on an initial chemical shipment, OHM purchasing agents (and site supervisors purchasing their own material) shall request MSDSs and updates to MSDSs on all purchase orders. Site supervisors that are without proper MSDSs shall be responsible for requesting this information from chemical manufacturers. The site supervisor shall maintain a file of follow-up letters for all hazardous chemical shipments they receive without MSDSs.

6. EMPLOYEE INFORMATION AND TRAINING

It is the responsibility of the supervisor in charge of each employee to ensure that the employee is properly trained. Training employees on chemical hazards and chemical handling is accomplished at the time of initial employment at OHM, whenever a new chemical (or physical) hazard is introduced into the work area, and through ongoing formal and informal training programs. Additionally, chemical hazards are communicated to employees through weekly and morning, job- site safety meetings, which shall be documented according to topic, major points discussed, and names of those attending (attendance is mandatory). Records of all formal training conducted at OHM are coordinated and maintained by the Training Department secretary.

At a minimum, OHM will inform employees on the following:

- The requirements of 29 CFR 1910.1200--Hazard Communication--Evaluating the potential hazards of chemicals and communicating information concerning hazards and appropriate protective measures to employees. OHM shall accomplish employee training in several different ways including, but not limited, to 40-hour OSHA Hazardous Waste Worker Training (29 CFR 1910.120), shop safety meetings, job-site safety meetings, Health and Safety Department safety meetings, and formal and informal training about specific chemical hazards.

- The location and availability of the written Hazard Communication Program, list of hazardous chemicals, and MSDSs will be periodically posted on the employee bulletin boards providing the location of the above material.

- Any operations in their work area where hazardous chemicals are present.

- How to work safety with chemicals present in the workplace and minimize potential exposure.

Employee training shall include the following:

- Methods and observations that may be used to detect the presence or release of a hazardous chemical in the work area (monitoring instruments, visual appearance or odor, and acute and chronic health effects).

- The physical, chemical, and health hazards of the chemicals in the work area.

- The methods of preventing exposure to hazardous chemicals including the measures OHM has taken to protect the employees.

- Procedures to follow if OHM employees are exposed to hazardous chemicals (location of the nearest phone, emergency eyewash, and shower will be included). These discussions shall include proper operating procedures for all emergency equipment.

- The details of the OHM written Hazard Communication Program, including an explanation of the labeling system and the MSDSs, and how employees can obtain and use the appropriate hazard information.

- Procedures for workers involved in non-routine tasks.

Each site supervisor shall ensure that the above training is emphasized to OHM employees. The health and safety department will ensure that each job site is properly informing and training all employees through group meetings and individual discussions. Whenever a new hazardous chemical is placed into use, the site supervisor shall inform the employees of the hazards said chemical may pose. The site supervisor shall also be responsible for obtaining and making available a MSDS for the new chemical.

7. HAZARDOUS NON-ROUTINE TASKS

Occasionally, employees at OHM are required to perform tasks which are considered to be non-routine. All tasks OHM considers non-routine shall be carefully discussed among the supervisor and those performing the task. This safety briefing shall include all possible hazards an employee may encounter while completing the task, including:

- Hazard recognition
- Chemicals involved and their hazardous properties
- Physical hazards
- Methods of avoiding hazards (monitoring instruments, proper personal protective equipment, etc.)

The following is a list of some of the non-routine tasks which may occur at OHM job sites. These tasks are all covered in detail in various OHM standard operating Procedures.

7.1 Confined Space Entry
7.2 Excavation, Trenching, and Shoring
7.3 Decontamination of Equipment
7.4 Laboratory Spills
7.5 High-Pressure Washer (Laser) Operation
7.6 Line Entry Procedure
7.7 Hot Work

8. INFORMING CONTRACTORS

It shall be the responsibility of the OHM site supervisor/SSO to provide subcontractors with the following information:

- Hazardous chemicals to which they may be exposed while performing a task including the following:

  - Chemical properties
  - Physical properties
  - Acute/Chronic health effects

- Location of "Employee Right-to Know" station which includes the following:

  - MSDS for work area
  - Hazard Communication Program
  - Other relevant safety material such as Project Health and Safety Plan (HASP)

- Precautionary measures to be taken to protect employees from chemical and physical hazards.

- Location of nearest emergency equipment (fire extinguisher, eyewash, shower, phone, first-aid kit, etc.)

- Procedures to follow in the event of employee exposure.

- Steps OHM has taken to reduce the risk of exposure to physical and chemical hazards including the following:

  - Safety meetings
  - Hazard Communication Program
  - Proper storage and labeling of hazardous chemicals
  - Health and safety department shop audits

- The methods used to label all hazardous chemicals.

- Emergency evacuation signals and evacuation rally locations.

The health and safety department shall offer assistance in providing the above information to subcontractors working at OHM job sites. On initial visit by a subcontractor to OHM job sites, a "Contractor Right-to-Know" release form shall be completed. This form will state that the above information has been communicated to the perspective contractor.

Conversely, the site supervisor shall obtain the above information from subcontractors for hazardous materials they have brought to our projects.

8.1 Contractor Right-to-Know Acknowledgment

By signing this sheet, the signee is stating that an OHM employee or representative has briefed said signee on the essentials of OHM's Hazard Communication Program, including hazardous chemical(s) to which one may be exposed, location of program and MSDS, precautionary measures taken to protect contractors from chemical and physical hazards, location of nearest emergency equipment, procedures to follow in the event of employer's employee chemical exposure, and method used to label all hazardous chemicals.

Name	Date	Company

9. LIST OF HAZARDOUS CHEMICALS

The following is a list of hazardous chemicals used on this OHM job site. Further information on each hazardous chemical listed below can be found in the MSDS which are included in the site specific health and safety plan.

- Typical OHM Job-Site Hazardous Chemical Inventory List

Available On Site	Chemicals
_____	Acetone
_____	Acetylene
_____	Activated Charcoal, Powder
_____	Alum (Aluminum Sulfate)

_____ Anti-fog Bausch & Lomb
_____ Argon/Methan (95%/5%)
_____ Brake Fluid
_____ Calcium Hydroxide (Hydrated Lime)
_____ Calibration Check Gas
_____ Carbon
_____ Caustic Soda (Sodium Hydroxide)
_____ Citrikleen
_____ Coal Fly Ash
_____ Compressed Air
_____ Diatomaceous Earth
_____ Diesel Fuel
_____ Dry Ice (Solid Carbon Dioxide)
_____ Ethylene Glycol
_____ Ferric Chloride
_____ Freon
_____ Gear Grease - Delta
_____ Helium
_____ Hexane
_____ Hydraulic Fluid
_____ Hydrochloric Acid
_____ Hydrogen
_____ Isobutylene
_____ Kiln Dust
_____ Methanol
_____ Nitrogen
_____ Nitrous Oxide
_____ Oxygen
_____ Penetone
_____ Pentane
_____ Polymers (Flocculants)
_____ Premium Unleaded Gasoline
_____ PVC Solvent Cleaner
_____ PVC Cement
_____ Regular Leaded Gasoline
_____ Starting Fluid
_____ Stoddard Solvent
_____ Sulfuric Acid
_____ *10W-40 Motor Oil - Shell*
_____ Tube Grease - Kendall
_____ TU Type 555 Thread Sealing Compound
_____ 2-Cycle Oil - Wolf's Head

- <u>Site-Specific Hazardous Chemical Inventory</u>

_____

_____

_____

_____

_____

APPENDIX C
MATERIAL SAFETY DATA SHEETS

Genium Publishing Corporation
1145 Catalyn Street
Schenectady, NY 12303-1836 USA
(518) 377-8854

Material Safety Data Sheets Collection:

Sheet No. 292
Ammonium Phosphate, Monobasic

Issued: 4/90

Section 1. Material Identification

31

Ammonium Phosphate, Monobasic, Description: Obtained by interacting properly proportioned ammonia and phosphoric acid. Used as baking powder with sodium bicarbonate, a fertilizer, a flameproofing agent, a food additive; in manufacturing of bread improvers, yeast, and vinegar; in plant nutrient solutions, analytical chemistry; and to prevent afterglow in matches.
Other Designations: CAS No. 7722-76-1; $NH_4H_2PO_4$; ammonium acid phosphate; ammonium biphosphate; ammonium dihydrogen phosphate; ammonium phosphate, primary.
Manufacturer: Contact your supplier or distributor. Consult the latest *Chemicalweek Buyers' Guide*(73) for a suppliers list.

R 1
I -
S 2
K 0

Genium

HMIS
H 1
F 0
R 0
PPG*
* Sec. 8

Section 2. Ingredients and Occupational Exposure Limits

Ammonium phosphate, monobasic, ca 100%

OSHA PEL	ACGIH TLV, 1989-90	NIOSH REL, 1987	Toxicity Data*
None established	None established	None established	None listed

* Monitor NIOSH, *RTECS*, for future toxicity data.

Section 3. Physical Data

Melting Point: 374 °F/190 °C
Molecular Weight: 115.03 g/mol
Specific Gravity (H_2O = 1 at 39 °F/4 °C): 1.8703 at 66 °F/19 °C
Water Solubility: Moderately soluble (1 g dissolves in about 2.5 ml water)

Appearance and Odor: Brilliant white powder or crystals; may have weak ammonia odor.

Section 4. Fire and Explosion Data

Flash Point: None reported	Autoignition Temperature: None reported	LEL: None reported	UEL: None reported

Extinguishing Media: Use water spray, CO_2, dry chemical powder, alcohol, or polymer foam.
Unusual Fire or Explosion Hazards: Ammonium phosphate, monobasic, is noncombustible.
Special Fire-fighting Procedures: Since fire may produce toxic fumes, wear a self-contained breathing apparatus (SCBA) with a full facepiece operated in the pressure-demand or positive-pressure mode. Protect against skin and eye contact. Be aware of runoff from fire control methods. Do not release to sewers or waterways.

Section 5. Reactivity Data

Stability/Polymerization: Ammonium phosphate, monobasic, is stable at room temperature in closed containers under normal storage and handling conditions. Hazardous polymerization cannot occur.
Chemical Incompatibilities: This material is incompatible with sodium hypochlorite (NaOCl).
Hazardous Products of Decomposition: Thermal oxidative decomposition of ammonium phosphate, monobasic, can produce toxic fumes of oxides of phosphorus, oxides of nitrogen, and ammonia.

Copyright © 1990 Genium Publishing Corporation.
Any commercial use or reproduction without the publisher's permission is prohibited.

ection 6. Health Hazard Data

Carcinogenicity: Neither the NTP, IARC, nor OSHA lists ammonium phosphate, monobasic, as a carcinogen.

Summary of Risks: Ammonium phosphate, monobasic, is a skin, eye, and respiratory tract irritant. Although no human cases are reported, ingestion or parenteral (outside the intestines) injections of large quantities may cause systemic ammonia poisoning. The thermal decomposition products (Sec. 5) cause more serious respiratory tract irritation.

M al Conditions Aggravated by Long-Term Exposure: None reported.

Organs: Skin, eyes, respiratory tract.

y Entry Routes: Inhalation, ingestion, skin and eye contact.

cute Effects: After vapor inhalation, respiratory tract irritation (mucosa irritation of the nose and throat), nausea, and vomiting may occur. Diarrhea, nausea, and vomiting may follow ingestion. Mild dermal irritation may occur with direct exposure to concentrated solutions.

hronic Effects: None reported.

IRST AID

Eyes: Flush immediately, including under the eyelids, gently but thoroughly with flooding amounts of running water for at least 15 min.

Skin: *Quickly* remove contaminated clothing. After rinsing affected skin with flooding amounts of water, wash it with soap and water.

nhalation: Remove exposed person to fresh air and support breathing as needed.

ngestion: Never give anything by mouth to an unconscious or convulsing person. If ingested, immediately dilute with 4 to 8 oz of milk or water. Avoid inducing vomiting.

After first aid, get appropriate in-plant, paramedic, or community medical support.

hysician's Note: If a large amount of ammonium phosphate, monobasic, is ingested, consider gastric lavage followed by administration of *ctivated charcoal; a cathartic is preferable. If vomiting or diarrhea is severe, it may be necessary to replace fluid and electrolyte losses.* Serum ammonia levels are not clinically indicated without ingestion or inhalation of large amounts of ammonium phosphate. Patients with severe respiratory tract irritation should have chest x-rays and baseline arterial blood gases with observation for development of pulmonary edema.

ection 7. Spill, Leak, and Disposal Procedures

Spill/Leak: Notify safety personnel. Cleanup personnel should protect against skin and eye contact and vapor inhalation. Scoop spilled material to appropriate disposal containers. Do not release to sewers or waterways. A 155-ppm concentration of ammonium phosphate, monobasic, during a 96-hr test period is the median lethal concentration (LC_{50}) at which 50% of fathead minnows die. Follow applicable OSHA regulations (29 CFR 1910.120).

Disposal: Contact your supplier or a licensed contractor for detailed recommendations. Follow applicable Federal, state, and local regulations.

PA Designations

CRA Hazardous Waste (40 CFR 261.33): Not listed

CERCLA Hazardous Substance (40 CFR 302.4): Not listed

SA A Extremely Hazardous Substance (40 CFR 355): Not listed

Toxic Chemical (40 CFR 372.65): Not listed

Designations

Air Contaminant (29 CFR 1910.1000, Subpart Z): Not listed

ection 8. Special Protection Data

oggles: Wear protective eyeglasses or chemical safety goggles, per OSHA eye- and face-protection regulations (29 CFR 1910.133).

Respirator: Follow OSHA respirator regulations (29 CFR 1910.134) and, if necessary, wear a NIOSH-approved respirator. For emergency or nonroutine operations (cleaning spills, reactor vessels, or storage tanks), wear an SCBA.

arning: Air-purifying respirators do *not* protect workers in oxygen-deficient atmospheres.

Other: Wear impervious gloves, boots, aprons, and gauntlets to prevent skin contact.

Ventilation: Provide general and local explosion-proof ventilation systems to control airborne concentrations. Local exhaust ventilation is preferred since it prevents contaminant dispersion into the work area by controlling it at its source.[103]

afety Stations: Make available in the work area emergency eyewash stations, safety/quick-drench showers, and washing facilities.

Contaminated Equipment: *Never wear contact lenses in the work area: soft lenses may absorb, and all lenses concentrate, irritants. Remove this* material from your shoes and equipment. Launder contaminated clothing before wearing.

omments: Never eat, drink, or smoke in work areas. Practice good personal hygiene after using this material, especially before eating, drinking, smoking, using the toilet, or applying cosmetics.

ection 9. Special Precautions and Comments

orage Requirements: Store in closed containers in a cool, dry, well-ventilated area away from sodium hypochlorite.

Engineering Controls: Prevent skin contact and inhalation of vapors. Use personal protective gear and adequate ventilation when handling is material.

ransportation Data (49 CFR 172.101, .102): Not listed

SDS Collection **References:** 1, 7, 73, 84, 103, 124, 126, 136

Prepared by: MJ Allison, BS; **Industrial Hygiene Review:** DJ Wilson, CIH; **Medical Review:** MJ Hardies, MD M3

Copyright © 1990 by Genium Publishing Corporation. Any commercial use or reproduction without the publisher's permission is prohibited. Judgments as to the suitability of information herein for the purchaser's purposes are necessarily the purchaser's responsibility. Although reasonable care has been taken in the preparation of such information, Genium Publishing Corporation extends no warranties, makes no representations, and assumes no responsibility as to the accuracy or suitability of such information for application to the purchaser's intended purpose or for consequences of its use.

Genium Publishing Corporation
One Genium Plaza
Schenectady, NY 12304-4690 USA
(518) 377-8854

Material Safety Data Sheets Collection:

Sheet No. 308
Dichlorodifluoromethane

Issued: 11/77 Revision: D, 9/92

Section 1. Material Identification

Dichlorodifluoromethane (CCl_2F_2) Description: Derived by reacting carbon tetrachloride and hydrogen fluoride in the presence of an antimony halide catalyst, or by high temperature chlorination of vinylidene fluoride. Formerly used as an aerosol propellant but due to it's role in ozone depletion, this use was banned by the USEPA on 12/15/78. Still used as a refrigerant, leak detection agent, blowing agent for polymeric foams, a foaming agent in fire extinguishers, a solvent or diluent in fumigants for food and medical equipment sterilization; in the manufacture of glass bottles, preparing frozen tissue sections, in paint and varnish removers, water purification, and in thermal expansion valves.

Other Designations: CAS No. 75-71-8, Algofrene type 2, Arcton, difluorodichloromethane, Eskimon-12, FC-12, fluorocarbon-12, Freon-12, Genetron-12, Halon, Isotron-12, propellant-12, refrigerant-12, Ucon-12.

Manufacturer: Contact your supplier or distributor. Consult latest *Chemical Week Buyers' Guide*[73] for a suppliers list.

R	1
I	1
S	1
K	1

Genium

HMIS
H 1
F 0
R 0
PPE*
* Sec. 8

Cautions: Dichlorodifluoromethane is considered low in toxicity but is a simple asphyxiant and produces weak irritative and narcotic effects in high concentrations. It may also induce serious cardiac arrythmias at high concentrations and in susceptible individuals. Contact with the liquid can cause frostbite.

Section 2. Ingredients and Occupational Exposure Limits

Dichlorodifluoromethane, ca 99.9%

1991 OSHA PEL
8-hr TWA: 1000 ppm (4950 mg/m^3)

1990 IDLH Level
50,000 ppm

1990 NIOSH REL
10-hr TWA: 1000 ppm (4950 mg/m^3)

1992-93 ACGIH TLV
TWA: 1000 ppm (4950 mg/m^3)

1990 DFG (Germany) MAK
TWA: 1000 ppm (5000 mg/m^3)
Category IV: Substances eliciting very weak effects.
Peak Exposure Limit: 2000 ppm, 60 min momentary value,* 3/shift

1985-86 Toxicity Data†
Human, inhalation, TC_{Lo}: 200,000 ppm/30 min caused conjunctival irritation, fibrosing aveolitis, and changes in the liver.
Rat, inhalation, LC_{50}: 80 pph/30 min; toxic effects not yet reviewed
Rabbit, inhalation, LC_{Lo}: 80 pph/30 min; toxic effects not yet reviewed

* The momentary value is the level which should never be exceeded.
† See NIOSH, *RTECS* (PA8200000), for additional toxicity data.

Section 3. Physical Data

Boiling Point: -22 °F (-29.8 °C)
Freezing Point: -252 °F (-158 °C)
Vapor Pressure: 5.7 atm at 68 °F (20 °C)
Vapor Density (Air = 1): 4.16
Surface Tension: 9 dyne/cm
Viscosity: 0.262 cP at 70 °F (21 °C)
Ionization Potential: *11.75 eV*

Molecular Weight: 120.9
Density (liquid): 1.486 at -22 °F (-29.8 °C)
Water Solubility: Nearly insoluble, 0.03% at 77 °F (25 °C)
Other Solubilities: Soluble in most organic solvents, such as alcohol, ether, benzene, amyl chloride, bromobenzene, bromoform, *n*-butyl alcohol, butyl butyrate, carbon tetrachloride, and chloroform.
Critical Temperature: 232.7 °F (111.5 °C)
Critical Pressure: *43.2 atm*

Appearance and Odor: Colorless, practically odorless (smells like ether at 20% in air) gas.

Section 4. Fire and Explosion Data

Flash Point: Nonflammable	Autoignition Temperature: Nonflammable	LEL: None reported	UEL: None reported

Extinguishing Media: Use extinguishing media suitable for surrounding fire.
Unusual Fire or Explosion Hazards: Cylinder may explode in heat of fire.
Special Fire-fighting Procedures: Because fire may produce toxic thermal decomposition products, wear a self-contained breathing apparatus (SCBA) with a full facepiece operated in pressure-demand or positive-pressure mode. Structural firefighter's protective clothing provides only limited protection. If possible without risk, move container from fire area. Apply cooling water to sides of containers until well after fire is out. Stay away from ends of tanks. Withdraw immediately if you hear a rising sound from venting safety device or notice any tank discoloration due to fire. Do not release runoff from fire control methods to sewers or waterways.

Section 5. Reactivity Data

Stability/Polymerization: Dichlorodifluoromethane is stable until 1022 °F (550 °C) above which it begins to decompose. Hazardous polymerization cannot occur.
Chemical Incompatibilities: Chemically active metals such as sodium, potassium, calcium and powdered aluminum, zinc, or magnesium.
Conditions to Avoid: Exposure to excessive heat and contact with incompatibles.
Hazardous Products of Decomposition: Thermal oxidative decomposition of dichlorodifluoromethane can produce carbon dioxide (CO_2), and toxic phosgene, chlorine, hydrogen chloride, hydrogen fluoride, and fluorine gases.

Section 6. Health Hazard Data

Carcinogenicity: The IARC,[164] NTP,[169] and OSHA[164] do not list dichlorodifluoromethane as a carcinogen.
Summary of Risks: Dichlorodifluoromethane is relatively low in toxicity but is a simple asphyxiant when oxygen levels decline to 15 to 16%, and produces unconsciousness at 6 to 8% oxygen. It also produces weak narcotic-like effects (when 10% mixture is inhaled) and eye irritation at high concentrations. Bursts of compressed gas or liquid can cause frostbite.
Medical Conditions Aggravated by Long-Term Exposure: Pre-existing ventricular ectopy.
Target Organs: Cardiovascular system and the central and peripheral nervous systems.

Continue on next page

Copyright © 1992 Genium Publishing Corporation.
Any commercial use or reproduction without the publisher's permission is prohibited.

ection 6. Health Hazard Data, *continued*

Primary Entry Routes: Inhalation. **Acute Effects:** Signs of asphyxia include 'air hunger', rapid-irregular breathing, headache, fatigue, mental nfusion, nausea & vomiting, giddiness & poor judgement, exhaustion, numbness of extremities, unconsciousness, convulsions, and death. uman volunteers exposed to varying concentrations experienced the following symptoms: 10,000 ppm for 2.5 hours--caused a 7% reduction in andard psychometer scores; 27,000 ppm for 15 or 60 seconds--caused an increase in airway resistance and electrocardiographic changes; 40,000 pr 80 minutes--generalized paresthesia, ringing in ears, apprehension, and slurred speech; 110,000 ppm for 11 minutes--marked decrease in sness, amnesia, and cardiac arrythmias; 200,000 ppm for a few moments--eye irritation and CNS effects. **Chronic Effects:** Possible xic effects.

IRST AID

Eyes: *Do not* allow victim to rub or keep eyes tightly shut. Gently lift eyelids and flush immediately and continuously with flooding amounts of ater until transported to an emergency medical facility. Consult a physician immediately. **Skin:** For frostbite, rapidly rewarm in 107.6 °F (42) water until a flush returns. *Do not use dry heat!* **Inhalation:** Remove exposed person to fresh air and support breathing as needed. gestion: *Unlikely!* Dichlorodifluoromethane is only a liquid below -22 °F (-29.8 °C).

After first aid, get appropriate in-plant, paramedic, or community medical support.

Note to Physicians: Monitor closely for ventricular ectopy and treat according to ACLS guidelines of the American Heart Association.

ection 7. Spill, Leak, and Disposal Procedures

Spill/Leak: Notify safety personnel, isolate and ventilate area, deny entry, and stay upwind. If possible without risk, stop leak. Leaks may be visible as a vapor cloud. If leak cannot be repaired, empty into a combustion chamber with a combustible fuel and burn (insure complete mbustion to prevent phosgene formation). Consult local/state air pollution control authority before incineration. Use an acid scrubber to remove olved halo-acids. Do not release leaking cylinder gas to the atmosphere because of CF-12's role in ozone depletion. Follow applicable OSHA regulations (29 CFR 1910.120). **Environmental Degradation:** CF-12 volatilizes rapidly and is broken down in the stratosphere by absorption of higher energy with shorter wavelength UV light. **Soil Absorption/Mobility:** CF-12 may absorb to soil particles as it has a log octanol/water rtition coefficient of 2.16. **Disposal:** CF-12 is a potential candidate for rotary kiln incineration at 1508 to 2912 °F (820 to 1600 °C) & for idized bed incineration at 842 to 1796 °F (450 to 980 °C). Contact your supplier or a licensed contractor for detailed recommendations. Follow applicable Federal, state, and local regulations.

EPA Designations

sted as a RCRA Hazardous Waste (40 CFR 261.33): No. U075

sted as a CERCLA Hazardous Substance* (40 CFR 302.4): Final Reportable Quantity (RQ), 5000 lb (2270 kg) [* per RCRA, Sec. 3001]

SARA Extremely Hazardous Substance (40 CFR 355): Not listed

Listed as a SARA Toxic Chemical (40 CFR 372.65)

SHA Designations

sted as an Air Contaminant (29 CFR 1910.1000, Table Z-1-A)

ection 8. Special Protection Data

s: Wear protective eyeglasses or chemical safety goggles, per OSHA eye- and face-protection regulations (29 CFR 1910.133). Because ens use in industry is controversial, establish your own policy.

ator: Seek professional advice prior to respirator selection and use. Follow OSHA respirator regulations (29 CFR 1910.134) and, if ecessary, wear a MSHA/NIOSH-approved respirator. For <10,000 ppm, use a supplied-air respirator (SAR) or SCBA. For <25,000 ppm use a AR operated in continuous-flow mode. For <50,000 ppm, use a SAR or SCBA with a full facepiece. For emergency or nonroutine operations leaning spills, reactor vessels, or storage tanks), wear an SCBA. *Warning! Air-purifying respirators do not protect workers in oxygen-deficient mospheres.* If respirators are used, OSHA requires a written respiratory protection program that includes at least: medical certification, training, -testing, periodic environmental monitoring, maintenance, inspection, cleaning, and convenient, sanitary storage areas.

her: Wear chemically protective gloves, boots, aprons, and gauntlets made from Neoprene rubber (recommended by ACGIH) to prevent skin ntact.

ntilation: Provide general and local exhaust ventilation systems to maintain airborne concentrations below the OSHA PEL (Sec. 2). Local haust ventilation is preferred because it prevents contaminant dispersion into the work area by controlling it at its source.[103]

ety Stations: Make available in the work area emergency eyewash stations, safety/quick-drench showers, and washing facilities.

ntaminated Equipment: Separate contaminated work clothes from street clothes and launder before reuse. Remove this material from your es and clean personal protective equipment.

nments: Never eat, drink, or smoke in work areas. Practice good personal hygiene after using this material, especially before eating, drinking, king, using the toilet, or applying cosmetics.

tion 9. Special Precautions and Comments

age Requirements: Prevent physical damage to containers. Store in a cool [below 125 °F (51.5 °C)], dry, well-ventilated area away from npatibles (Sec. 5). Shipped as a liquefied compressed gas under it's own vapor pressure. **Engineering Controls:** To reduce potential health ds, use sufficient dilution or local exhaust ventilation to control airborne contaminants and to maintain concentrations at the lowest practical Never use arc-producing, open flame, or other high-temperature equipment in halogenated hydrocarbon atmospheres. Levels well below the can damage direct fired space heaters & water heaters when drawn into the combustion chamber. Heaters should have an independent air y. Before entering a confined space that may contain CF-12, ensure that there is adequate oxygen (19%). Consult 29 CFR 1910.146 for dures on confined space entry. **Administrative Controls:** Consider preplacement and periodic medical exams of exposed workers.

Transportation Data (49 CFR 172.101)

Shipping Name: Dichlorodifluoromethane (R-12)
Hazard Class: 2.2
: UN1028
Packing group: –
abel: Nonflammable Gas
ackaging Requirements (172.102): –

Packaging Authorizations
a) Exceptions: 173.306
b) Nonbulk Packaging: 173.304
c) Bulk Packaging: 173.314 & 173.315

Quantity limitations
a) Passenger Aircraft or Railcar: 75 kg
b) Cargo Aircraft Only: 150 kg

Vessel Stowage Requirements
a) Vessel Stowage: A
Other: –

ollection References: 73, 101, 103, 124, 126, 127, 132, 133, 136, 140, 148, 153, 159, 163, 164, 167, 168, 176, 178, 180
d by: M Gannon, BA; **Industrial Hygiene Review:** P Roy, CIH, MPH; **Medical Review:** AC Darlington, MD, MPH

1992 by Genium Publishing Corporation. Any commercial use or reproduction without the publisher's permission is prohibited. Judgments as to the suitability of information herein for the purchaser's nurpo ly the purchaser's responsibility. Although reasonable care has been taken in the preparation of such information, Genium Publishing Corporation extends no warranties ility as to the accuracy or suitability of such information for application to the purchaser's intended purpose or fre

Genium Publishing Corporation
1145 Catalyn Street
Schenectady, NY 12303-1836 USA
(518) 377-8854

Material Safety Data Sheets Collection:

Sheet No. 474
Fuel Oil No. 6

Issued: 10/81 Revision: A, 11/90

Section 1. Material Identification

33

Fuel Oil No. 6 Description: A high-viscosity residual oil. Used to power heavy units such as ships, trucks, and trains. A thick paste, fuel oil No. 6 is not usually used unless preheated to decrease its viscosity.
Other Designations: CAS No. 68553-00-4, bunker C.
Manufacturer: Contact your supplier or distributor. Consult the latest *Chemicalweek Buyers' Guide*[73] for a suppliers list.

R	1
I	-
S	2
K	2

NFPA

HMIS
H 0
F 2
R 0
PPG*
* Sec. 8

Cautions: Fuel oil No. 6 is a respiratory irritant and central nervous system (CNS) depressant. It is a moderate fire hazard when exposed to heat or flame.

Section 2. Ingredients and Occupational Exposure Limits

Fuel oil No. 6*

1989 OSHA PEL	1990-91 ACGIH TLV	1988 NIOSH REL	1985-86 Toxicity Data†
None established	None established	None established	Rat, oral, LD_{50}: 9 g/kg

* A complex mixture of paraffinic, olefinic, naphthenic, and aromatic hydrocarbons, including polycyclic aromatic hydrocarbons. Sulfur content is <2.8%. A fuel oil No. 6 with low sulfur (0.2 and 1.2%) is commercially available.
† Monitor NIOSH, *RTECS* (HZ1800000), for future toxicity data.

Section 3. Physical Data

Boiling Point: 500 °F (>260 °C)
Vapor Pressure: 0.2 mm Hg at 70 °F (21 °C)
Viscosity: 36,000 centistoke at 100 °F (37.8 °C)
Specific Gravity: ~0.966
Water Solubility: Insoluble
Appearance and Odor: Black liquid to heavy paste with a petroleum odor.

Section 4. Fire and Explosion Data

Flash Point: 150 to 270 °F (66 to 132 °C)	Autoignition Temperature: 765 °F (407 °C)	LEL: 3.9% v/v	UEL: 20.1% v/v

Extinguishing Media: Use dry chemical, carbon dioxide, foam, water fog, or spray. Do not use a forced water spray directly on burning oil since this scatters the fire. Use a smothering technique to extinguish fire. Cool fire-exposed containers with water spray.
Unusual Fire or Explosion Hazards: Fuel oil No. 6 is an OSHA Class IIIA combustible liquid that exhibits "boil-over" characteristics.
Special Fire-fighting Procedures: Isolate hazard area and deny entry. Since fire may produce toxic fumes, wear a self-contained breathing apparatus (SCBA) with a full facepiece operated in pressure-demand or positive-pressure mode and full protective clothing. If feasible, remove containers from fire hazard area. Be aware of runoff from fire control methods. Do not release to sewers or waterways.

Section 5. Reactivity Data

Stability/Polymerization: Fuel oil No. 6 is stable at room temperature in closed containers under normal storage and handling conditions. Hazardous polymerization cannot occur.
Chemical Incompatibilities: Incompatible with strong oxidizing agents; heating greatly increases fire hazard.
Conditions to Avoid: Avoid heat and ignition sources.
Hazardous Products of Decomposition: Thermal oxidative decomposition of fuel oil No. 6 can produce various hydrocarbons and hydrocarbon derivatives and partial oxidation products including carbon dioxide, carbon monoxide, and sulfur dioxide.

Copyright © 1990 Genium Publishing Corporation.
Any commercial use or reproduction without the publisher's permission is prohibited.

Section 6. Health Hazard Data

Carcinogenicity: The IARC lists fuel oils, residual (heavy) as possible human carcinogen (Group 2B); animal evidence-limited.
Summary of Risks: Residual oils are generally more viscous and less toxic than kerosene due to their low volatility and limited absorption through the intestinal tract. *Inhalation of heated or misted fuel oil No. 6 can cause the same systemic and local pulmonary effects seen with lighter* grade fuel oils, respiratory tract irritation, headache, dizziness, nausea, stupor, convulsions, or unconsciousness, depending on concentration and time of exposure. When removed from exposure area, affected persons usually experience complete recovery. The residual (heavy) oils have a aspiration hazard since heavy oils are more viscous. Aspiration is limited to inhalation from vomiting after ingestion and dilution with contents. Significant ingestion is unlikely. In addition, intestinal absorption of long-chain hydrocarbons is low. Its primary toxicities, then, laxative effect, mild gastrointestinal (GI) irritation, and skin irritation. After prolonged skin contact, changes in rabbit bladder linings are reported. Prolonged or repeated skin contact may cause irritation and block the sebaceous glands, with a rash of acne-like pimples and spots, usually on the arms and legs. *Repeated prolonged dermal contact may also have systemic effects. Heavy repeated application of fuel oil No. 6 to* rabbit skin gave severe skin changes and systemic toxicity including an increased incidence of hyperplasia of the urinary bladder epithelium.*
Medical Conditions Aggravated by Long-Term Exposure: None reported.
Target Organs: Central nervous system (CNS), skin, and mucous membranes.
Primary Entry Routes: Inhalation, ingestion.
Acute Effects: Systemic effects from ingestion include gastrointestinal (GI) irritation, vomiting, diarrhea, and in severe cases, CNS depression, progressing to coma and death. Inhalation of aerosol or mists may result in increased rate of respiration, tachycardia (excessively rapid heart beat), and cyanosis (dark purplish coloration of the skin and mucous membranes caused by deficient oxygentation of the blood).
Chronic Effects: Repeated skin contact causes dermatitis and possible systemic toxicity.
FIRST AID
Eyes: Gently lift the eyelids and flush immediately and continuously with flooding amounts of water until transported to an emergency medical facility. Consult a physician immediately.
Skin: *Quickly* remove contaminated clothing. Rinse with flooding amounts of water for at least 15 min. For reddened or blistered skin, consult a physician. Wash affected area with soap and water.
Inhalation: Remove exposed person to fresh air and support breathing as needed.
Ingestion: Never give anything by mouth to an unconscious or convulsing person. If ingested, *do not induce vomiting*. Consulting a physician immediately.
After first aid, get appropriate in-plant, paramedic, or community medical support.
Note to Physicians: Gastric lavage is contraindicated due to aspiration hazard. Preferred antidotes are charcoal and milk.

* EPA (TOSCA) document 8EHQ-0181-0377, December, 1980.

Section 7. Spill, Leak, and Disposal Procedures

Spill/Leak: Notify safety personnel, evacuate area for large spills, remove all heat and ignition sources, and provide maximum explosion-proof ventilation. Cleanup personnel should protect against vapor inhalation and liquid contact. Clean up spills promptly to reduce fire or vapor hazards. Use a noncombustible absorbent material to pick up small spills or residues. For large spills, dike far ahead to contain. Pick up liquid for reclaim or disposal. Do not release to sewers or waterways due to health and fire and/or explosion hazard. Follow applicable OSHA regulations (29 CFR 1910.120). Report large oil spills.
Disposal: Contact your supplier or a licensed contractor for detailed recommendations. Follow applicable Federal, state, and local regulations.
EPA Designations
RCRA Hazardous Waste (40 CFR 261.33): Not listed
CERCLA Hazardous Substance (40 CFR 302.4): Not listed
Extremely Hazardous Substance (40 CFR 355): Not listed
SARA Toxic Chemical (40 CFR 372.65): Not listed
OSHA Designations
Air Contaminant (29 CFR 1910.1000, Subpart Z): Not listed

Section 8. Special Protection Data

Goggles: Wear protective eyeglasses or chemical safety goggles, per OSHA eye- and face-protection regulations (29 CFR 1910.133).
Respirator: Seek professional advice prior to respirator selection and use. Follow OSHA respirator regulations (29 CFR 1910.134) and, if necessary, use a NIOSH-approved respirator with mist filter and organic vapor cartridge. For emergency or nonroutine operations (cleaning spills, reactor vessels, or storage tanks), wear an SCBA. *Warning! Air-purifying respirators do not protect workers in oxygen-deficient atmospheres.*
Other: Wear impervious gloves, boots, aprons, and gauntlets to prevent skin contact.
Ventilation: Provide general and local explosion-proof ventilation systems to maintain airborne concentrations that promote worker safety and productivity. Local exhaust ventilation is preferred since it prevents contaminant dispersion into the work area by controlling it at its source.[103]
Safety Stations: Make available in the work area emergency eyewash stations, safety/quick-drench showers, and washing facilities.
Contaminated Equipment: Never wear contact lenses in the work area: soft lenses may absorb, and all lenses concentrate, irritants. Remove this material from your shoes and equipment. Launder contaminated clothing before wearing.
Comments: Never eat, drink, or smoke in work areas. Practice good personal hygiene after using this material, especially before eating, drinking, smoking, using the toilet, or applying cosmetics.

Section 9. Special Precautions and Comments

Storage Requirements: Use and storage conditions should be suitable for an OSHA Class IIIA combustible liquid. Store in closed containers in a well-ventilated area away from heat and ignition sources and strong oxidizing agents. Protect containers from physical damage. To prevent static sparks, electrically ground and bond all containers and equipment used in shipping, receiving, or transferring operations. Use nonsparking tools and explosion-proof electrical equipment. No smoking in area of storage or use.
Engineering Controls: Avoid prolonged skin contact and vapor or mist inhalation. Use only in a well-ventilated area with personal protective gear. Institute a respiratory protection program that includes regular training, maintenance, inspection, and evaluation. Practice good personal hygiene and housekeeping procedures. Do not wear oil-contaminated clothing. Do not put oily rags in pockets. When working with this material, wear gloves or use barrier cream.

Transportation Data (49 CFR 172.101)
DOT Shipping Name: Fuel oil
DOT Hazard Class: Combustible liquid
ID No.: NA1993
DOT Label: None
Packaging Exceptions: 173.118a
Packaging Requirements: None

MSDS Collection **References:** 1, 6, 7, 12, 73, 84, 103, 126, 131, 132, 133, 136, 143
Prepared by: MJ Allison, BS; **Industrial Hygiene Review:** DJ Wilson, CIH; **Medical Review:** W Silverman, MD; **Edited by:** JR Stuart, MS 98

Copyright © 1990 by Genium Publishing Corporation. Any commercial use or reproduction without the publisher's permission is prohibited. Judgments as to the suitability of information herein for the purchaser's purposes are necessarily the purchaser's responsibility. Although reasonable care has been taken in the preparation of such information, Genium Publishing Corporation extends no warranties, makes no representations, and assumes no responsibility as to the accuracy or suitability of such information for application to the purchaser's intended purpose or for consequences of its use.

Genium Publishing Corporation
One Genium Plaza
Schenectady, NY 12304-4690 USA
(518) 377-8854

Material Safety Data Sheets Collection:

Sheet No. 683
Polychlorinated Biphenyls (PCBs)

Issued: 11/88 Revision: A, 9/92

Section 1. Material Identification

Polychlorinated Biphenyls [$C_{12}H_{10-n}Cl_n$ (n=3, 4, 5)] Description: A class of nonpolar chlorinated hydrocarbons with a biphenyl nucleus (two benzene nuclei connected by a single C-C bond) in which any or all of the hydrogen atoms have been replaced by chlorine. Commercial PCBs are mixtures of chlorinated biphenyl isomers with varying degrees of chlorination. Prepared industrially by the chlorination of biphenyl with anhydrous chlorine in the presence of a catalyst such as ferric chloride or iron filings. Except for limited research and development applications, PCBs have not been produced in the US since 1977. When large quantities of PCBs were manufactured in the US, they were marketed under the tradename Aroclor (Monsanto) and were characterized by four digit numbers. The first two digits indicating biphenyls (12), triphenyls (54), or both (25, 44); the last two digits indicating the weight percent of chlorine. PCBs' thermal stability, nonflammability, and high dielectric capability made them very useful in electrical equipment. Formerly used as additives in hydraulic fluids, heat transfer systems, lubricants, cutting oils, printer's ink, fire retardants, asphalt, brake linings, automobile body sealants, plasticizers, adhesives, synthetic rubber, floor tile, wax extenders, dedusting agents, pesticide extenders, and carbonless reproducing paper. PCBs are still used in certain existing electrical capacitors and transformers that require enhanced electrical protection to avoid heating from sustained electric faults.

Other Designations: CAS No. 1336-36-3, Aroclor, Clophen, Chlorextol, chlorinated biphenyls, chlorinated diphenyl, chlorinated diphenylene, chloro biphenyl, chloro-1,1-biphenyl, Dykanol, Fenclor, Inerteen, Kaneclor, Montar, Noflamol, Phenoclor, Pyralene, Pyranol, Santotherm, Sovol, Therminol FR-1

R 1
I 4
S 3*
K 1
* Skin absorption

NFPA

HMIS
H 2‡
F 1
R 0
PPE†
† Sec. 8
‡ Chronic Effects

Cautions: PCBs are potent liver toxins that may be absorbed through skin. Potentially, chronic or delayed toxicity is significant because PCBs accumulate in fatty tissue and may reasonably be anticipated to be carcinogens. PCBs are a bioaccumulative environmental hazard. When burned, decomposition products may be more hazardous than the PCBs.

Section 2. Ingredients and Occupational Exposure Limits

PCBs, contain various levels of polychlorinated dibenzofurans and chlorinated naphthalenes as contaminants

1991 OSHA PELs, Skin
8-hr TWA (Chlorodiphenyl, 42% chlorine): 1 mg/m^3
8-hr TWA (Chlorodiphenyl, 54% chlorine): 0.5 mg/m^3

1990 DFG (Germany) MAK, Danger of Cutaneous Absorption
TWA (Chlorodiphenyl, 42% chlorine): 0.1 ppm (1 mg/m^3)
Category III: Substances with systemic effects, onset of effect > 2 hr., half-life > shift length (strongly cumulative)
Short-term Level.: 1 ppm, 30 min., average value, 1 per shift

TWA (Chlorodiphenyl, 54% chlorine): 0.05 ppm (0.5 mg/m^3)
Category III: (see above)
Short-term Level. 0.5 ppm, 30 min., average value, 1 per shift

1985-86 Toxicity Data*
Rat, oral, TD: 1250 mg/kg administered intermittently for 25 weeks produced liver tumors.
Mammal, oral, TD_{Lo}: 325 mg/kg administered to female for 30 days prior to mating and from the 1st to the 36th day of gestation produced effects on newborn (stillbirth; live birth index; viability index).

1990 NIOSH REL
TWA (Chlorodiphenyl, 42% chlorine): 0.001 mg/m^3
TWA (Chlorodiphenyl, 54% chlorine): 0.001 mg/m^3

1992-93 ACGIH TLVs, Skin *
TWA (Chlorodiphenyl, 42% chlorine): 1 mg/m^3
TWA (Chlorodiphenyl, 54% chlorine): 0.5 mg/m^3

* These guidelines offer reasonably good protection against systemic intoxication, but may not guarantee that chloroacne won't occur.
† See NIOSH, *RTECS* (TQ1350000), for additional reproductive, tumorigenic, and toxicity data.

Section 3. Physical Data*

Boiling Point: 644-707 °F (340-375 °C)
Melting Point: 42%: -2.2 °F (-19°C); 54%: 14 °F (-10 °C)
Vapor Pressure: 1 mm Hg at 100 °F (38 °C); 10^{-6} to 10^{-3} mm at 20 °C
Molecular Weight: 188.7 to 398.5

Specific Gravity: 1.3 to 1.8 at 20 °C
Water Solubility: Low solubility (0.007 to 5.9 mg/L)
Other Solubilities: Most common organic solvents, oils, and fats; slightly soluble in glycerol and glycols.

Appearance and Odor: PCBs vary from mobile oily liquids to white crystalline solids and hard non-crystalline resins, depending upon chlorine content.

* Physical and chemical properties vary widely according to degree and to the position of chlorination.

Section 4. Fire and Explosion Data

Flash Point: 286-385 °F (141-196 °C) OC*	Autoignition Temperature: 464 °F (240 °C)	LEL: None reported	UEL: None reported

Extinguishing Media: Use extinguishing media suitable to the surrounding fire. Use dry chemical, foam, carbon dioxide (CO_2), or water spray. Water spray may be ineffective. Use water spray to cool fire-exposed containers or transformers. Do not scatter PCBs with high-pressure water streams. **Unusual Fire or Explosion Hazards:** Combustion products (hydrogen chloride, phosgene, polychlorinated dibenzofurans, and furans) are more hazardous than the PCBs themselves. **Special Fire-fighting Procedures:** Because fire may produce toxic thermal decomposition products, wear a self-contained breathing apparatus (SCBA) with a full facepiece operated in pressure-demand or positive-pressure mode. Approach fire from upwind to avoid highly toxic decomposition products. Structural firefighter's protective clothing will provide *limited* protection. Do not release runoff from fire control methods to sewers or waterways. Dike for later disposal.

* Flash points shown are a range for various PCBs. Some forms do not have flash points.

Section 5. Reactivity Data

Stability/Polymerization: PCBs are very stable materials but are subject to photodechlorination when exposed to sunlight or UV (spectral region above 290 nanometers). Hazardous polymerization cannot occur. **Chemical Incompatibilities:** PCBs are chemically inert and resistant to oxidation. acids, and bases. **Conditions to Avoid:** Avoid heat and ignition sources.
Hazardous Products of Decomposition: Thermal oxidative decomposition [1112-1202 °F (600-650 °C)] of PCBs can produce highly toxic derivatives, including polychlorinated dibenzo-para-dioxins (PCDDs), polychlorinated dibenzofurans (PCDFs), hydrogen chloride, phosgene and other irritants.

Copyright © 1992 Genium Publishing Corporation. Any commercial use or reproduction without the publisher's permission is prohibited.

ection 6. Health Hazard Data

arcinogenicity: The IARC,[166] and NTP[169] list PCBs as an IARC probable carcinogen (overall evaluation is 2A; limited human data; sufficient animal data) and NTP anticipated carcinogen, respectively. **Summary of Risks:** PCBs are potent liver toxins that can be absorbed through unbroken skin in toxic amounts without immediate pain or irritation. PCBs have low acute toxicity, but can accumulate in fatty tissue and severe alth effects may develop later. Generally, toxicity increases with a higher chlorine content; PCB oxides are more toxic. The toxic action on the ver also increases with simultaneous exposure to other liver toxins, e.g. chlorinated solvents, alcohol, and certain drugs. Pathological pregnancies (abnormal pigmentations, abortions, stillbirths, and underweight births) have been associated with increased PCB serum levels in mothers; PCBs c assed in breast milk. PCBs can affect the reproductive system of adults. **Medical Conditions Aggravated by Long-Term Exposure:** r, and respiratory disease. **Target Organs:** Skin, liver, eyes, mucous membranes, and respiratory tract. **Primary Entry Routes:** on, dermal contact, ingestion. **Acute Effects:** Exposure to PCB vapor or mist is severely irritating to the skin, eyes, nose, throat, and upper spiratory tract. Intense acute exposure to high concentrations may result in eye, lung, and liver injury. Systemic effects include nausea, vomiting, increased blood pressure, fatigue, weight loss, jaundice, edema and abdominal pain. Cognitive, neurobehavior and psychomotor impairment and memory loss have also been seen after acute exposure. **Chronic Effects:** Repeated exposure to PCBs can cause chloroacne; redness, swelling, yness, thickening and darkening of the skin and nails; swelling and burning of the eyes, and excessive eye discharge; distinctive hair follicles; strointestinal disturbances; neurological symptoms including headache, dizziness, depression, nervousness, numbness of the extremities, and joint and muscle pain; liver enlargement; menstrual changes in women; and chronic bronchitis. Cancer, primarily liver, is also a possible result of exposure, but data is inconclusive.

RST AID **Eyes:** *Do not* allow victim to rub or keep eyes tightly shut. Rinsing eyes with medical oil (olive, mineral) initially may remove PCB d halt irritation better than water rinsing alone. Gently lift eyelids and flush immediately and continuously with flooding amounts of water until nsported to an emergency medical facility. Consult a physician immediately. **Skin:** *Quickly* remove contaminated clothing. Rinse with flooding amounts of water for at least 15 min. Wash exposed area with soap and water. *Multiple soap and water washings are necessary.* Avoid the use of organic solvents to clean the skin. For reddened or blistered skin, consult a physician. **Inhalation:** Remove exposed person to fresh air and support eathing as needed. **Ingestion:** In most cases, accidental PCB ingestion will not be recognized until long after vomiting would be of any value. ver give anything by mouth to an unconscious or convulsing person. Vomiting of the pure substance may cause aspiration. Consult a physician. **Note to Physicians:** Monitor patients for increased hepatic enzymes, chloroacne, and eye, gastrointestinal, and neurologic symptoms listed above. Diagnostic tests include blood levels of PCBs and altered liver enzymes.

ection 7. Spill, Leak, and Disposal Procedures

ill/Leak: Notify safety personnel, evacuate all unnecessary personnel, provide adequate ventilation, and isolate hazard area. Cleanup personnel should protect against vapor inhalation and skin or eye contact. For small spills, take up with sand or other noncombustible material and place into containers for later disposal. For larger spills, dike far ahead of spill to contain for later disposal. Follow applicable OSHA regulations (29 CFR 10.120). **Environmental Transport:** PCBs have been shown to bio-concentrate significantly in aquatic organisms. **Ecotoxicity:** Bluegill, TLm: 78 ppm/96 hr. Mallard Duck, LD_{50}: 2000 ppm. **Environmental Degradation:** In general, the persistence of PCBs increases with an increase degree of chlorination. **Soil Absorption/Mobility:** PCBs are tightly absorbed in soil and generally do not leach significantly in most aqueous soil systems. However, in the presence of organic solvents, PCBs may leach rapidly through the soil. Volatilization of PCBs from soil may be slow, but er time may be significant. **Disposal:** Approved PCB disposal methods include: incineration with scrubbing, high-efficiency boilers, landfills, and A-approved alternative disposal methods. Each disposal method has various criteria. Contact your supplier or a licensed contractor for detailed commendations. Follow applicable Federal, state, and local regulations.

EPA Designations
CRA Hazardous Waste (40 CFR 261.33): Not listed
xtremely Hazardous Substance (40 CFR 355): Not listed
a SARA Toxic Chemical (40 CFR 372.65)
s a CERCLA Hazardous Substance* (40 CFR 302.4): Final Reportable Quantity (RQ), 1 lb (0.454 kg) [* per CWA, Sec. 311(b)(4) and 307(a)]

OSHA Designations
Listed as an Air Contaminant (29 CFR 1910.1000, Table Z-1-A)

ection 8. Special Protection Data

oggles: Wear protective eyeglasses or chemical safety goggles, per OSHA eye- and face-protection regulations (29 CFR 1910.133). Because ntact lens use in industry is controversial, establish your own policy. **Respirator:** Seek professional advice prior to respirator selection and use. llow OSHA respirator regulations (29 CFR 1910.134) and, if necessary, wear a MSHA/NIOSH-approved respirator. Select respirator based on its itability to provide adequate worker protection for given working conditions, level of airborne contamination, and presence of sufficient oxygen. inimum respiratory protection should include a combination dust-fume-mist and organic vapor cartridge or canister or air-supplied, depending on the situation. For emergency or nonroutine operations (cleaning spills, reactor vessels, or storage tanks), wear an SCBA. *Warning! Air-rifying respirators do not protect workers in oxygen-deficient atmospheres.* If respirators are used, OSHA requires a written respiratory protec-n program that includes at least: medical certification, training, fit-testing, periodic environmental monitoring, maintenance, inspection, cleaning, t convenient, sanitary storage areas. **Other:** Wear chemically protective gloves, boots, aprons, and gauntlets to prevent all skin contact. Butyl ber, neoprene, Teflon, and fluorocarbon rubber have break through times greater than 8 hrs. **Ventilation:** Provide general and local exhaust itilation systems to maintain airborne concentrations below the OSHA PEL (Sec. 2). Local exhaust ventilation is preferred because it prevents taminant dispersion into the work area by controlling it at its source.[103] **Safety Stations:** Make available in the work area emergency eyewash ions, safety/quick-drench showers, and washing facilities. **Contaminated Equipment:** Separate contaminated work clothes from street clothes launder before reuse. Segregate contaminated clothing in such a manner so that there is no direct contact by laundry personnel. Implement lity assurance to ascertain the completeness of the cleaning procedures. Remove this material from your shoes and clean PPE. **Comments:** er eat, drink, or smoke in work areas. Practice good personal hygiene after using this material, especially before eating, drinking, smoking, g the toilet, or applying cosmetics.

tion 9. Special Precautions and Comments

age Requirements: Store in a closed, labelled, container in a ventilated area with appropriate air pollution control equipment. **Engineering trols:** To reduce potential health hazards, use sufficient dilution or local exhaust ventilation to control airborne contaminants and to maintain entrations at the lowest practical level. **Administrative Controls:** Inform employees of the adverse health effects associated with PCBs. Limit s to PCB work areas to authorized personnel. Consider preplacement and periodic medical examinations with emphasis on the skin, liver, and reproductive system. Monitor PCB blood levels. Consider possible effects on the fetus. Keep medical records for the entire length of oyment and for the following 30 yrs.

Transportation Data (49 CFR 172.101)

Shipping Name: Polychlorinated biphenyls
Hazard Class: 9
.: UN2315
acking Group: II
bel: CLASS 9
Provisions (172.102): 9, N81

Packaging Authorizations
a) **Exceptions:** 173.155
b) **Non-bulk Packaging:** 173.202
c) **Bulk Packaging:** 173.241

Quantity Limitations
a) **Passenger Aircraft or Railcar:** 100 L
b) **Cargo Aircraft Only:** 220 L

Vessel Stowage Requirements
a) **Vessel Stowage:** A
b) **Other:** 34

Collection References: 26, 73, 89, 100, 101, 103, 124, 126, 127, 132, 133, 136, 163, 164, 168, 169, 174, 175, 180
ed by: MJ Wurth, BS; **Industrial Hygiene Review:** PA Roy MPH, CIH; **Medical Review:** AC Darlington, MD

© 1992 by Genium Publishing Corporation. Any commercial use or reproduction without the publisher's permission is prohibited. Judgments as to the suitability of information herein for the purchaser's purposes arily the purchaser's responsibility. Although reasonable care has been taken in the preparation of such information, Genium Publishing Corporation extends no warranties, makes no representations, and assumes no lity as to the accuracy or suitability of such information for application to the purchaser's intended purpose or for consequences of its use.

Genium Publishing Corporation
1145 Catalyn Street
Schenectady, NY 12303-1836 USA
(518) 377-8854

Material Safety Data Sheets Collection:

Sheet No. 115
Sodium Hypochlorite Aqueous Solution

Issued: 2/83 Revision: A, 11/90

Section 1. Material Identification 33

Sodium Hypochlorite (NaOCl) Aqueous Solution Description: Sodium hypochlorite is derived by addition of chlorine to cold dilute solution of sodium hydroxide. Used as a swimming pool disinfectant; as an intermediate and a reagent; in bleaching paper pulp and textiles; in organic chemicals; in medicine, fungicides, germicides; and in laundering.
Other Designations: CAS No. 7681-52-9; Antiformin;® B-K Liquid;® bleach; Chloros;® chlorox; Clorox;® Dakin's Solution;® Hychlorite;® hypochlorite solution; hypochlorous acid, sodium salt; Milton;® soda bleach liquor.
Manufacturer: Contact your supplier or distributor. Consult the latest *Chemicalweek Buyers' Guide*[73] for a suppliers list.

R	1
I	-
S	3
K	0

Genium: 0, 3, 0, oxy

HMIS
H 3
F 0
R 0
PPG*
* Sec. 8

Cautions: Sodium hypochlorite is a strong eye, skin, and mucous membrane irritant. The extent of irritation depends on concentration of sodium hypochlorite and the duration of exposure. Although nonflammable, sodium hypochlorite presents a *dangerous fire and explosion hazard* since it may cause ignition when in contact with organic materials such as paper, wood, or oil.

Section 2. Ingredients and Occupational Exposure Limits

Sodium hypochlorite aqueous solution*

1989 OSHA PEL	1990-91 ACGIH TLV	1988 NIOSH REL	1985-86 Toxicity Data†
None established	None established	None established	Human, cytogenetic analysis, lymphocyte:100 ppm/24 hr Rabbit, eye: 10 mg produces moderate irritation Rat, oral (12% solution), LD_{50}: ca 12 mg/kg

* The usual composition of an industrial sodium hypochlorite solution is 10.5% sodium hypochlorite and 0.8 to 2.4% sodium hydroxide. The available chlorine is ~10.0%. Solutions containing excess sodium hydroxide (NaOH) pose an increased alkalinity hazard.
† See NIOSH, *RTECS* (NH3486300), for additional mutative data.

Section 3. Physical Data

Boiling Point: Decomposes
Melting Point: Decomposes
Vapor Pressure: 17.5 mm Hg at 20 °C
pH: 9 to 10*
Molecular Weight: 75.45

Specific Gravity (20 °C/4 °C): 5.25%NaOCl (household bleach): 1.09
8.0%NaOCl: 1.15
12.0%NaOCl: 1.21
Water Solubility: Complete solubility

Appearance and Odor: Sodium hypochlorite is a white, crystalline solid. The aqueous solution is a clear, pale yellow or greenish liquid with a chlorine odor.

* This is the pH of a neutral solution. Some products may contain an excess of NaOH and have a higher pH.

Section 4. Fire and Explosion Data

Flash Point: None reported	Autoignition Temperature: None reported	LEL: None reported	UEL: None reported

Extinguishing Media: Use dry chemical, CO_2, halon, water spray, or standard foam. Use water spray from a safe distance to cool fire-exposed containers, dilute liquid, and control vapors.
Unusual Fire or Explosion Hazards: Sodium hypochlorite is an oxidizing agent and vigorous reactions can occur with oxidizable materials in a fire situation.
Special Fire-fighting Procedures: Since fire may produce toxic fumes, wear a self-contained breathing apparatus (SCBA) with a full facepiece operated in the pressure-demand or positive-pressure mode and full protective gear. If feasible, remove containers from fire area to prevent pressure rupture. Be aware of runoff from fire control methods. Do not release to sewers or waterways.

Section 5. Reactivity Data

Stability/Polymerization: Anhydrous material is unstable, but aqueous solutions can be satisfactorily stable for months under proper storage conditions. Rate of decomposition increases with concentration and temperature. A 12% sodium hypochlorite aqueous solution decomposes slowly at 104 °F (40 °C) to yield sodium chloride (NaCl) and sodium chlorate ($NaClO_3$). Hazardous polymerization cannot occur.
Chemical Incompatibilities: Sodium hypochlorite is incompatible with ammonia, urea, oxidizable materials, chlorine-liberating acids, and oxygen-liberating metals such as nickel, copper, tin, manganese and iron. Sodium hypochlorite has violent reactions with amines, ammonium nitrate, ammonium oxalate, ammonium phosphate, ammonium acetate, ammonium carbonate, cellulose, methanol, aziridine, phenyl acetonitrile, and ethylene imine. Sodium hypochlorite has hazardous reactions with soaps, and may be hazardous during mixing operations or if ignited. It is also incompatible with toilet bowl cleaners containing bisulfates.
Conditions to Avoid: Do not mix ammonia and bleach; chloramine gas may evolve.
Hazardous Products of Decomposition: Thermal oxidative decomposition of sodium hypochlorite can produce toxic fumes of sodium oxide (Na_2O) and chlorine (Cl^-).

Copyright © 1990 Genium Publishing Corporation.
Any commercial use or reproduction without the publisher's permission is prohibited.

Section 6. Health Hazard Data

Carcinogenicity: The NTP, IARC, and OSHA do not list sodium hypochlorite aqueous solution as a carcinogen.
Summary of Risks: Sodium hypochlorite aqueous solution is toxic primarily by its corrosive and irritant properties, which derive from its alkalinity, its potential as a chlorine generator, and salt's oxidating potential. The solution's concentration and the exposure's duration affect the degree of toxicity. Inhalation injury may occur by exposure to the mist the solution forms, by exposure to chlorine gas, or from the heated solution's thermal degradation products. Skin contact is corrosive and irritating. Exposure through skin contact or ingestion may cause tissue destruction with permanent damage.
Medical Conditions Aggravated by Long-Term Exposure: Individuals with chronic respiratory disorder should minimize inhalation contact.
Target Organs: Skin, eyes, mucous membranes, and respiratory tract.
Primary Entry Routes: Inhalation, ingestion.
Acute Effects: Inhalation of mist or fumes can cause bronchial irritation, cough, difficulty breathing, stomatitis (inflammation of the mouth's mucous membrane), nausea, and pulmonary edema. Additional effects have included circulatory collapse and delirium. Ingestion of a few ounces (1% concentration) can cause corrosion of the mucous membranes, perforation of the esophagus and stomach, and laryngeal edema; may lead to convulsion, coma, or death. At smaller concentrations (5%), the effects are much less damaging. Liquid contact can produce irritation of the eyes or skin with blistering and eczema (especially at 12%).
Chronic Effects: Sodium hypochlorite is a constant irritant to eyes and throat.
FIRST AID
Eye: Gently lift the eyelids and flush immediately and continuously with flooding amounts of water until transported to an emergency medical facility. Consult a physician immediately.
Skin: Quickly remove contaminated clothing. Rinse with flooding amounts of water for at least 15 min. For reddened or blistered skin, consult a physician. Wash affected area with soap and water.
Inhalation: Remove exposed person to fresh air and administer 100% humidified supplemental oxygen with assisted ventilation as required to patients with respiratory tract irritation.
Ingestion: Never give anything by mouth to an unconscious or convulsing person. If ingested, have that conscious person drink 1 to 2 glasses of water or milk. Consult a physician immediately. Avoid inducing vomiting and perform gastric lavage cautiously.
After first aid, get appropriate in-plant, paramedic, or community medical support.
Note to Physicians: Consider oral administration of sodium thiosulfate solutions if sodium hypochlorite is ingested. Do not administer neutralizing substances since the resultant exothermic reaction could further damage tissue. Endotracheal intubation could be needed if glottic edema compromises the airway. For individuals with significant inhalation exposure, monitor arterial blood gases and chest x-ray.

Section 7. Spill, Leak, and Disposal Procedures

Spill/Leak: Notify safety personnel and provide adequate ventilation. Cleanup personnel should protect against inhalation of mists and fumes and contact with liquid. Use noncombustible absorbents to pick up spills for disposal. Do not use combustible absorbents such as sawdust. For large spills, dike far ahead of spill to contain. Consider neutralizing with reducing agents. Keep on alkaline side and dilute with copious quantities of water. Do not flush to sewers or waterways since sodium hypochlorite can harm aquatic life in very low concentrations. Follow applicable OSHA regulations (29 CFR 1910.120).
Disposal: Contact your supplier or a licensed contractor for detailed recommendations. Follow applicable Federal, state, and local regulations.
EPA Designations
RCRA Hazardous Waste (40 CFR 261.33): Not listed
List CERCLA Hazardous Substance* (40 CFR 302.4), Reportable Quantity (RQ): 100 lb (45.4 kg) [* per Clean Water Act, Sec. 311(b)4]
SARA Extremely Hazardous Substance (40 CFR 355): Not listed
SARA Toxic Chemical (40 CFR 372.65): Not listed
OSHA Designations
Air Contaminant (29 CFR 1910.1000, Subpart Z): Not listed

Section 8. Special Protection Data

Goggles: Wear protective eyeglasses or chemical safety goggles, per OSHA eye- and face-protection regulations (29 CFR 1910.133).
Respirator: Seek professional advice prior to respirator selection and use. Follow OSHA respirator regulations (29 CFR 1910.134) and, if necessary, wear a NIOSH-approved respirator. For emergency or nonroutine operations (cleaning spills, reactor vessels, or storage tanks), wear an SCBA. *Warning! Air-purifying respirators do not protect workers in oxygen-deficient atmospheres.*
Other: Wear rubber gloves, boots, aprons, and gauntlets to prevent skin contact.
Ventilation: Provide general and local ventilation systems to maintain airborne concentrations that promote worker safety and productivity. Workers should not have irritation effects from exposure. Local exhaust ventilation is preferred since it prevents contaminant dispersion into the work area by controlling it at its source.[103]
Safety Stations: Make available in the work area emergency eyewash stations, safety/quick-drench showers, and washing facilities.
Contaminated Equipment: Never wear contact lenses in the work area: soft lenses may absorb, and all lenses concentrate, irritants. Remove this material from your shoes and equipment. Launder contaminated clothing before wearing.
Comments: Never eat, drink, or smoke in work areas. Practice good personal hygiene after using this material, especially before eating, drinking, smoking, using the toilet, or applying cosmetics.

Section 9. Special Precautions and Comments

Storage Requirements: Store in closed, vented, noncorrodable containers in a cool [<85 °F (29.5 °C)], dry, well-ventilated area away from direct sunlight, heat, incompatible materials, acids, and organics (wood, paper, or oil). "Empty" containers can retain hazardous product residues. Solutions in water are storage hazards due to oxygen evolution. Avoid long storage periods since the product degrades with age. Protect containers from physical damage.
Engineering Controls: Avoid inhalation of vapors, dusts, or fume and contact with skin and eyes. Protect workers against irritation effects of airborne exposure. Use adequate ventilation and appropriate personal protective gear. Institute a respiratory protection program that includes regular training, maintenance, inspection, and evaluation. Practice good personal hygiene and housekeeping procedures.

Transportation Data (49 CFR 172.101, .102)

DOT Shipping Name: Hypochlorite solution *containing >7% available chlorine by weight*	**DOT Shipping Name:** Hypochlorite solution *containing not more than 7% available chlorine by weight*	**IMO Shipping Name:** Hypochlorite, solutions with >5% available chlorine
DOT Hazard Class: Corrosive material	**DOT Hazard Class:** ORM-B	**IMO Hazard Class:** 8
ID No.: UN1791	**ID No.:** NA1791	**ID No.:** UN1791
DOT Label: Corrosive	**DOT Label:** None	**IMO Label:** Corrosive
DOT Packaging Exceptions: 173.244	**DOT Packaging Exceptions:** 173.505	**IMDG Packaging Group:** II/III
DOT Packaging Requirements: 173.277	**DOT Packaging Requirements:** 173.510	

MSDS Collection **References:** 1, 3-11, 14, 25, 34, 37, 48, 49, 73, 84, 100, 101, 103, 109, 124, 126, 127, 132, 136, 139, 140
Prepared by: MJ Allison, BS; **Industrial Hygiene Review:** DJ Wilson, CIH; **Medical Review:** W Silverman, MD; **Edited by:** JR Stuart, MS

Copyright © 1990 by Genium Publishing Corporation. Any commercial use or reproduction without the publisher's permission is prohibited. Judgments as to the suitability of information herein for the purchaser's purposes are necessarily the purchaser's responsibility. Although reasonable care has been taken in the preparation of such information, Genium Publishing Corporation extends no warranties, makes no representations, and assumes no responsibility as to the accuracy or suitability of such information for application to the purchaser's intended purpose or for consequences of its use.

Genium Publishing Corporation
One Genium Plaza
Schenectady, NY 12304-4690 USA
(518) 377-8854

Material Safety Data Sheets Collection:
Sheet No. 317
Toluene
Issued: 8/79 Revision: E, 9/92 Errata: 2/94

Section 1. Material Identification

Toluene ($C_6H_5CH_3$) Description: Derived from petroleum i.e., dehydrogenation of cycloparaffin fractions followed by the aromatization of saturated aromatic hydrocarbons or by fractional distillation of coal-tar light oil and purified by rectification. Used widely as a solvent (replacing benzene in many cases) for oils, resins, adhesives, natural rubber, coal tar, asphalt, pitch, acetyl celluloses, cellulose paints and varnishes; a diluent for photogravure inks, raw material for organic synthesis (benzoyl & benzilidene chlorides, saccharine, TNT, toluene diisocyanate, and many dyestuffs), in aviation and high octane automobile gasoline, as a nonclinical thermometer liquid and suspension solution for navigational instruments.
Other Designations: CAS No. 108-88-3, Methacide, methylbenzene, methylbenzol, phenylmethane, toluol, Tolu-sol.
Manufacturer: Contact your supplier or distributor. Consult latest *Chemical Week Buyers' Guide*[73] for a suppliers list.

Cautions: *Toluene is an eye, skin, and respiratory tract irritant becoming narcotic at high centrations. Liver and kidney damage* has occurred. Pregnant women chronically exposed to toluene have shown teratogenic effects. Toluene is highly flammable.

R	1	NFPA
I	3	
S	2*	
K	3	

* Skin absorption

NFPA: 3 / 2 / 0 / -

HMIS		
H	2-	Chronic effects
F	3	
R	0	
PPE-Sec. 8		

Section 2. Ingredients and Occupational Exposure Limits

Toluene, < 100%; may contain a small amount of benzene (~ 1%), xylene, and nonaromatic hydrocarbons.

1991 OSHA PELs
8-hr TWA: 100 ppm (375 mg/m³)
15-min STEL: 150 ppm (560 mg/m³)

1990 IDLH Level
2000 ppm

1990 NIOSH RELs
TWA: 100 ppm (375 mg/m³)
STEL: 150 ppm (560 mg/m³)

1992-93 ACGIH TLV (Skin)
TWA: 50 ppm (188 mg/m³)

1990 DFG (Germany) MAK*
TWA: 100 ppm (380 mg/m³)
Half-life: 2 hr to end of shift
Category II: Substances with systemic effects
Peak Exposure Limit: 500 ppm, 30 min average value, 2/shift

1985-86 Toxicity Data†
Man, inhalation, TC_{Lo}: 100 ppm caused hallucinations, and changes in motor activity and changes in psychophysiological tests.
Human, oral, LD_{Lo}: 50 mg/kg; toxic effects not yet reviewed
Human, eye: 300 ppm caused irritation.
Rat, oral, LD_{50}: 5000 mg/kg
Rat, liver: 30 µmol/L caused DNA damage.

* Available information suggests damage to the developing fetus is probable.
†See NIOSH, *RTECS* (XS5250000), for additional irritation, mutation, reproductive, and toxicity data.

Section 3. Physical Data

Boiling Point: 232 °F (110.6 °C)
Melting Point: -139 °F (-95 °C)
Molecular Weight: 92.15
Density: 0.866 at 68 °F (20/4 °C)
Surface Tension: 29 dyne/cm at 68 °F (20 °C)
Viscosity: 0.59 cP at 68 °F (20 °C)
Refraction Index: 1.4967 at 20 °C/D

Water Solubility: Very slightly soluble, 0.6 mg/L at 68 °F (20 °C)
Other Solubilities: Soluble in acetone, alcohol, ether, benzene, chloroform, glacial acetic acid, petroleum ether, and carbon disulfide.
Vapor Pressure: 22 mm Hg at 68 °F (20 °C); 36.7 mm Hg at 86 °F (30 °C)
Saturated Vapor Density (Air = 0.075 lb/ft³ or 1.2 kg/m³): 0.0797 lb/ft³ or 1.2755 kg/m³
Odor Threshold (range of all referenced values): 0.021 to 69 ppm

Appearance and Odor: Colorless liquid with a sickly sweet odor.

Section 4. Fire and Explosion Data

Flash Point: 40 °F (4.4 °C) CC	Autoignition Temperature: 896 °F (480 °C)	LEL: 1.27% v/v	UEL: 7.0% v/v

Extinguishing Media: Toluene is a Class 1B flammable liquid. To fight fire, use dry chemical carbon dioxide, or 'alcohol-resistant' foam. Water spray may be ineffective as toluene floats on water and may actually spread fire. ***Unusual Fire or Explosion Hazards:*** *Concentrated vapors are* heavier than air and may travel to an ignition source and flash back. Container may explode in heat of fire. Toluenes' burning rate = 5.7 mm/min and its flame speed = 37 cm/sec. Vapor poses an explosion hazard indoors, outdoors, and in sewers. May accumulate static electricity. **Special Fire-fighting Procedures:** Because fire may produce toxic thermal decomposition products, wear a self-contained breathing apparatus (SCBA) with a full facepiece operated in pressure-demand or positive-pressure mode. Structural firefighter's protective clothing provides only limited protection. Apply cooling water to sides of tanks until well after fire is out. Stay away from ends of tanks. For massive fire in cargo area, use monitor nozzles or unmanned hose holders; if impossible, withdraw from fire and let burn. Withdraw immediately if you hear a rising sound from venting safety device or notice any tank discoloration due to fire because a BLEVE (boiling liquid expanding vapor explosion) may be imminent. Do not release runoff from fire control methods to sewers or waterways.

Section 5. Reactivity Data

Stability/Polymerization: Toluene is stable at room temperature in closed containers under normal storage and handling conditions. Hazardous polymerization can't occur. **Chemical Incompatibilities:** Strong oxidizers, concentrated nitric acid, nitric acid + sulfuric acid, dinitrogen tetroxide, silver perchlorate, bromine trifluoride, tetranitromethane, and 1,3-dichloro-5,5-dimethyl-2,4-imidazolididione. **Conditions to Avoid:** Contact with heat, ignition sources, or incompatibles. **Hazardous Products of Decomposition:** Thermal oxidative decomposition of toluene can produce carbon dioxide, and acrid, irritating smoke.

Section 6. Health Hazard Data

Carcinogenicity: The IARC,[164] NTP,[169] and OSHA[164] do not list toluene as a carcinogen. **Summary of Risks:** Toluene is irritating to the eyes, nose, and respiratory tract. Inhalation of high concentrations produces a narcotic effect sometimes leading to coma as well as liver and kidney damage. 93% of inhaled toluene is retained in the body of which 80% is metabolized to benzoic acid, then to hippuric acid and excreted in urine. The remainder is metabolized to *o*-cresol and excreted or exhaled unchanged. Toluene metabolism is inhibited by alcohol ingestion and is synergistic with benzene, asphalt fumes, or chlorinated hydrocarbons (i.e. perchloroethylene). Toluene is readily absorbed through the skin at 14 to 23 mg/cm²/hr. Toluene is absorbed quicker during exercise than at rest and appears to be retained longer in obese versus thin victims; presumably due to its lipid solubility. There is inconsistent data on toluene's ability to damage bone marrow; chronic poisoning has resulted in anemia and leucopenia with biopsy showing bone marrow hypo-plasia. These reports are few and some authorities argue that the effects may have been due to benzene contaminants. Chronic inhalation during pregnancy has been associated with teratogenic effects on the fetus including microcephaly, CNS dysfunction, attentional deficits, developmental delay + language impairment, growth retardation, and physical defects including a small midface, short palpebral fissures, with deep-set eyes, low-set ears, flat nasal bridge with a small nose, micrognathia, and blunt fingertips. There is some evidence that toluene causes an autoimmune illness in which the body produces antibodies that cause inflammation of its own kidney.

Continue on next page

Copyright © 1992 Genium Publishing Corporation. Any commercial use or reproduction without the publisher's permission is prohibited.

ie ion 6. Health Hazard Data

Medical Conditions Aggravated by Long-Term Exposure: Alcoholism and CNS, kidney, skin, or liver disease. **Target Organs:** CNS, liver, idney, skin. **Primary Entry Routes:** Inhalation, skin contact/absorption. **Acute Effects:** Vapor inhalation causes respiratory tract irritation, fatigue, re ness, confusion, dizziness, headache, dilated pupils, watering eyes, nervousness, insomnia, parasthesis, and vertigo progressing to narcotic coma. le may result from cardiac arrest due to ventricular fibrillation with catecholamines loss. Liquid splashed in the eye causes conjunctival irritation, ar ent corneal damage and possible burns. Prolonged skin contact leads to drying and fissured dermatitis. Ingestion causes GI tract irritation and ymp associated with inhalation. **Chronic Effects:** Symptoms include mucous membrane irritation, headache, vertigo, nausea, appetite loss and lo erance. Repeated heavy exposure may result in encephalopathies (cerebellar ataxia and cognitive dysfunction), liver enlargement, and id ophy (wasting away). Symptoms usually appear at workdays end, worsen at weeks end and decrease or disappear over the weekend. **Th TAID Eyes:** *Do not* allow victim to rub or keep eyes tightly shut. Gently lift eyelids and flush immediately and continuously with flooding mounts of water until transported to an emergency medical facility. Consult an ophthalmologist immediately. **Skin:** *Quickly* remove contaminated lothing. Rinse with flooding amounts of water for at least 15 min. Wash exposed area with soap and water. **Inhalation:** Remove exposed person to re air and support breathing as needed. **Ingestion:** Never give anything by mouth to an unconscious or convulsing person. Contact a poison control en and unless otherwise advised, have that *conscious and alert* person drink 1 to 2 glasses of water to dilute. *Do not* induce vomiting because of anger of aspiration into the lungs. Gastric lavage may be indicated if large amounts are swallowed; potential toxicity needs to be weighed against spiration risk when deciding for or against gastric lavage. **Note to Physicians:** Monitor cardiac function. If indicated, use epinephrine and other at olamines carefully, because of the possibility of a lowered myocardial threshold to the arrhythmogenic effects of such substances. Obtain CBC, le olytes, and urinalysis. Monitor arterial blood gases. If toluene has > 0.02% (200 ppm) benzene, evaluate for potential benzene toxicity. BEI: ippuric acid in urine, sample at shift end (2.5 g/g creatinine); Toluene in venous blood, sample at shift end (1.0 mg/L).

ection 7. Spill, Leak, and Disposal Procedures

pl **Leak:** Notify safety personnel, isolate and ventilate area, deny entry, and stay upwind. Cleanup personnel protect against inhalation and skin/eye on t. Use water spray to cool and disperse vapors but it may not prevent ignition in closed spaces. Cellosolve, hycar absorbent materials, and luorocarbon water can also be used for vapor suppression/containment. Take up small spill with earth, sand, vermiculite, or other absorbent, oncombustible material. Dike far ahead of large spills for later reclamation or disposal. For water spills, (10 ppm or greater) apply activated carbon at 0X e spilled amount and remove trapped material with suction hoses or use mechanical dredges/lifts to remove immobilized masses of pollutants nd ecipitates. Toluene can undergo fluidized bed incineration at 842 to 1796 °F (450 to 980 °C), rotary kiln incineration at 1508 to 2912 °F (820 to 600 °C), or liquid injection incineration at 1202 to 2912 °F (650 to 1600 °C). Follow applicable OSHA regulations (29 CFR 1910.120). **Ecotoxicity 'alues:** Blue gill, LC_{50} = 17 mg/L/24 hr; shrimp (*Crangonfracis coron*), LC_{50} = 4.3 ppm/96 hr; fathead minnow (*Pimephales promelas*), LC_{50} = 36.2 ng 96 hr. **Environmental Degradation:** If released to land, toluene evaporates and undergoes microbial degradation. In water, toluene volatilizes nd odegrades with a half-life of days to several weeks. In air, toluene degrades by reaction with photochemically produced hydroxyl radicals. **Disposal:** Treat contaminated water by gravity separation of solids, followed by skimming of surface. Pass through dual media filtration and carbon *bsorption units (carbon ratio 1 kg to 10 kg soluble material). Return waste water from backwash to gravity separator. Contact your supplier or a* ce ed contractor for detailed recommendations. Follow applicable Federal, state, and local regulations.

:P. Designations

is as a RCRA Hazardous Waste (40 CFR 261.33): No. U220

ARA Extremely Hazardous Substance (40 CFR 355), TPQ: Not listed

isted as a CERCLA Hazardous Substance* (40 CFR 302.4): Final Reportable Quantity (RQ), 1000 lb (454 kg)

[* RA, Sec. 3001; CWA, Sec. 311 (b)(4); CWA, Sec. 307 (a)]

is ARA Toxic Chemical (40 CFR 372.65): Not listed

OSHA Designations

Listed as an Air Contaminant (29 CFR 1910.1000, Table Z-1-A)

ection 8. Special Protection Data

Eo es: Wear protective eyeglasses with shatter-resistant glass and side-shields or chemical safety goggles, per OSHA eye- and face-protection eg tions (29 CFR 1910.133). Because contact lens use in industry is controversial, establish your own policy. **Respirator:** Seek professional dvice prior to respirator selection and use. Follow OSHA respirator regulations (29 CFR 1910.134) and, if necessary, wear a MSHA/NIOSH-pproved respirator. For < 1000 ppm, use any chemical cartridge respirator with appropriate organic vapor cartridges, any supplied-air respirator SA), or SCBA. For < 2000 ppm, use any SAR operated in continuous-flow mode, any SAR or SCBA with a full facepiece, or any air-purifying esp ator with a full facepiece having a chin-style, front or back mounted organic vapor canister. For emergency or nonroutine operations (cleaning pil, reactor vessels, or storage tanks), wear an SCBA. *Warning! Air-purifying respirators do not protect workers in oxygen-deficient atmospheres.* f respirators are used, OSHA requires a written respiratory protection program that includes at least: medical certification, training, fit-testing, eriodic environmental monitoring, maintenance, inspection, cleaning, and convenient, sanitary storage areas. **Other:** Wear chemically protective lo , boots, aprons, and gauntlets to prevent skin contact. Polyvinyl alcohol with a breakthrough time of > 8 hr, Teflon and Viton are recom-ner d as suitable materials for PPE. **Ventilation:** Provide general and local exhaust ventilation systems to maintain airborne concentrations below e OSHA PELs (Sec. 2). Local exhaust ventilation is preferred because it prevents contaminant dispersion into the work area by controlling it at its ource.[103] **Safety Stations:** Make available in the work area emergency eyewash stations, safety/quick-drench showers, and washing facilities. **Co minated Equipment:** Separate contaminated work clothes from street clothes and launder before reuse. Remove toluene from your shoes and lea PPE. **Comments:** Never eat, drink, or smoke in work areas. Practice good personal hygiene after using this material, especially before eating, rinking, smoking, using the toilet, or applying cosmetics.

ection 9. Special Precautions and Comments

to e **Requirements:** Prevent physical damage to containers. Store in a cool, dry, well-ventilated area away from ignition sources and incom-ati s. Outside or detached storage is preferred. If stored inside, use a standard flammable liquids warehouse, room, or cabinet. To prevent static parks, electrically ground and bond all equipment used with toluene. Do not use open lights in toluene areas. Install Class 1, Group D electrical quipment. Check that toluene is free of or contains < 1% benzene before use. **Engineering Controls:** To reduce potential health hazards, use uff ent dilution or local exhaust ventilation to control airborne contaminants and to maintain concentrations at the lowest practical level. **Adminis-rat e Controls:** Adopt controls for confined spaces (29 CFR 1910.146) if entering areas of unknown toluene levels (holes, wells, storage tanks). Consider preplacement and periodic medical exams of exposed workers that emphasize the CNS, liver, kidney, and skin. Include hemocytometric nd thrombocyte count in cases where benzene is a contaminant of toluene. Monitor air at regular intervals to ensure effective ventilation.

Transportation Data (49 CFR 172.101)

O Shipping Name: Toluene	**Packaging Authorizations**	**Quantity Limitations**	**Vessel Stowage Requirements**
OT Hazard Class: 3	**a) Exceptions:** 150	**a) Passenger Aircraft or Railcar:** 5L	**Vessel Stowage:** B
D N 1294	**b) Non-bulk Packaging:** 202	**b) Cargo Aircraft Only:** 60L	**Other:** --
O ng Group: II	**c) Bulk Packaging:** 242		
O *: Flammable Liquid*			
pe al Provisions (172.102): T1			

ISDS Collection **References:** 26, 73, 100, 101, 103, 124, 126, 127, 132, 140, 148, 153, 159, 163, 164, 167, 169, 171, 174, 175, 176, 180.
rep ed by: M Gannon, BA; **Industrial Hygiene Review:** PA Roy, CIH, MPH; **Medical Review:** AC Darlington, MD, MPH

py : © 1992 by Genium Publishing Corporation. Any commercial use or reproduction without the publisher's permission is prohibited. Judgments as to the suitability of information herein for the purchaser's purposes are ces y the purchaser's responsibility. Although reasonable care has been taken in the preparation of such information, Genium Publishing Corporation extends no warranties, makes no representations, and assumes no sponsibility as to the accuracy or suitability of such information for application to the purchaser's intended purpose or for consequences of its use.

APPENDIX D
SITE-SPECIFIC PERSONAL PROTECTIVE EQUIPMENT (PPE) PROGRAM

4. PROGRAM ELEMENTS

Program elements define the regulatory requirements of a PPE program.

4.1 Hazard assessment - All tasks undertaken by OHM personnel will be assessed for chemical, physical, and environmental hazards present or likely to be present which necessitate the use of PPE to ensure adequate protection. This assessment shall take place prior to commencement of work.

4.2 Hazard Reassessment - The level of protection or type of personal protective equipment shall be increased when additional information on site conditions indicates that increased protection is necessary to reduce employee exposures below permissible exposure limits, published exposure levels for hazardous substances and health hazards, or other physical and environmental hazards.

4.3 PPE Selection - The regional health and safety director/manager or designee will initially select the level and types of PPE that will protect the affected employee from the hazards identified in the initial hazard assessment.

4.4 Written Certification - The site specific Health and Safety Plan (HASP) will serve as the written certification that identifies the workplace was evaluated. The HASP shall be dated. The signature line shall designate the person certifying that the evaluation has been performed.

4.5 Communication of Selection - Employees will be informed of the PPE selection decisions through reading or verbally reviewing the HASP, attending pre-project safety briefings, job safety analysis (JSA) review, or attending safety meetings.

4.6 PPE Use and Fit - The supervisor will be responsible for the proper use and fit of PPE by workers under their direction and will monitor the effectiveness of these items. Heath and safety personnel will advise and assist the supervisor in these areas.

4.7 Work Mission Duration - The supervisor will be responsible for the establishment of the duration of specific work missions. The duration will be determined by the complexity of the assignment, PPE involved, physical factors, temperature, humidity, weather conditions, elevation of work, and acclimation of the worker to the demands of the task assigned. The supervisor will consider the recommendations of the health and safety personnel.

A sufficient amount of rest breaks will be allowed in order to avoid overexertion or thermal stress by the employees while maintaining productive work practices. Further guidance is offered in OHM Health and Safety Procedures entitled Heat Stress and Cold Stress.

4.8 PPE Maintenance and Storage - Each employee is responsible for the proper maintenance and storage of the standard issue equipment (e.g., hard hat, full-face piece negative pressure respirator, safety glasses). The supervisor will assure that proper maintenance is carried out.

4.9 PPE Decontamination - Each employee is responsible for daily cleaning and decontamination of reusable PPE such as outer gloves, outer boots, reusable chemically resistant clothing, and standard issue PPE such as hard hats and respirators.

OHM will provide an area/s for decontamination operations, necessary cleaning agents, cleaning tools, such as brushes and wash basins, and a method to dispose of materials generated during decontamination activities.

OHM will attempt to reduce decontamination requirements through the use of disposable protective clothing and gloves as feasible.

4.10 PPE Training - All employees will receive training in the proper use of PPE prior to wearing the equipment in a work situation. This training will be administered upon commencement of employment during HAZWOPER training. PPE refresher training will be reviewed annually during the HAZWOPER refresher training. Project specific training will be provided as required.

4.11 PPE Donning and Doffing Procedures - All employees will receive training upon commencement of employment and during annual refresher training concerning the donning and doffing of PPE. Periodic training will be provided as required.

4.12 PPE Inspection - Each employee shall inspect PPE for defects and proper function prior to each use. Defective or damaged PPE shall not be used. Any PPE found to be defective or have missing parts will be replaced prior to use.

4.13 PPE In Use Monitoring - The supervisor is responsible for monitoring the effectiveness of selected PPE. If at any time level of PPE is to be downgraded, it is mandatory that the change be approved by the regional health and safety director/manager or designee.

4.14 Evaluation of PPE Program - Health and safety personnel will compile data on PPE in the field to determine that the PPE performs to OHM needs. Periodically, this information should be reviewed cognizant health and safety professional to ensure that PPE is providing the necessary level of protection, quality, and is appropriate for the work performed.

If at any time the failure of PPE causes injury to an employee or fails to perform as expected, the supervisor will take the unit or item out of service and investigate the incident. The incident shall be immediately reported to the regional health and safety director/manager. If after scrutiny, the unit or item is determined to have a manufacturing defect, all identical units will be removed from use until corrective actions are taken.

4.15 Limitations During Temperature Extremes - Extreme temperatures exert stress on personnel and may alter the performance characteristics of PPE. During periods of extreme temperature, work assignments will be adjusted to protect the employee from overexertion or exposure. The supervisor will evaluate if temperature extremes are effecting performance characteristics of PPE and report these findings to the regional health and safety director/manager.

4.16 Unserviceable PPE - Any PPE which is no longer functioning properly or is no longer serviceable shall be removed from use and either repaired or destroyed.

5. SAFETY EQUIPMENT POLICY

OHM will provide, maintain, and replace personal protective equipment as detailed below.

5.1 Standard issue safety equipment - Standard issue safety equipment will be provided at no cost to field employees. These items consist of:

- Hard hat
- Safety glasses with clear and shaded lenses
- Full-face respirator with nose cup

5.2 Company provided equipment - OHM will provide at no cost to the employee the following items on a task specific or project specific basis:

- Chemical protective equipment such as gloves, boots, and clothing
- Specialty glasses or goggles

- Face shields
- Flame resistant clothing
- Hearing protection
- Fall protection

5.3 Employee provided equipment - The employee shall provide the following equipment:

- ANSI approved steel toed and shank boots/shoes (Note: Further guidance is provided in Section 7 Safety footwear)
- Outerwear for cold weather

5.4 Equipment replacement - OHM will replace worn-out or work-damaged equipment detailed in 5.1 and 5.2. OHM reserves the right to charge employees for the replacement cost of equipment which is lost or damaged though neglect or abuse.

5.5 Additional PPE - The regional health and safety director/manager or the supervisor may require additional company provided PPE on a task specific basis.

6. WORK CLOTHES

OHM employees, subcontractors, and visitors will observe the requirements for proper work clothing when on OHM project sites, facilities, and shops.

6.1 Pants - Long pants are required at all times. These pants must be in good repair.

6.2 Shirts - Shirts will be worn on the job. Shirts will be buttoned up the front and at the cuff unless rolled up. Shirt tails must be kept in the trousers. Sleeveless shirts are prohibited at all work locations. Supervisory personnel are expected to wear a shirt with a collar. T-shirts are permitted for personnel who wear protective clothing most of the day.

6.3 Clothing - Loose or ragged clothing will not be worn.

6.4 Modifications - Regional health and safety director/manager may modify work clothing requirements on a project specific basis.

6.5 Contaminated Clothing - Clothing (including shoes) saturated with petroleum products or chemicals will be removed immediately to prevent irritation and possible dermal exposure.

6.6 Jewelry - Rings and other jewelry (except watches) must be removed when working in areas where they could catch on moving objects, sharp protrusions, come in contact with electrical circuits or chemical agents, or compromise PPE ie. rings capable of cutting gloves. Additionally, the supervisor may deem other types of jewelry inappropriate for the work task.

6.7 Hair Length - Hair long enough to constitute a hazard while working around moving machinery or rotating tools and equipment must be secured by a net or tied back. Hair styles must not interfere with the ability to properly wear safety headgear, safety spectacles, and respiratory protection.

7. EYE/FACE PROTECTION

All OHM employees, subcontractors, and visitors shall wear eye and face protection meeting the requirements of ANSI document Z87.1 - 1989 titled "Practice of Occupational and Educational Eye and Face Protection" during the tasks posing exposure to eye or face injury.

7.1 Requirements - To protect the face and eyes against injuries from flying objects, splashing liquids, and harmful rays, safety spectacles with side shields, goggles, face shields, cutting goggles, and welding helmets will be used as appropriate. The supervisor will be responsible to identify the need for eye/face protection and specify the eye/face protection required for each operation. A selection guide is attached in Table 1.

7.2 Safety spectacles - Safety spectacles are protective devices intended to shield the wearer's eyes from a variety of hazards. While they are primary protectors and may be used alone, they may also be used in conjunction with other protective devices such as goggles and face shields.

7.3 Goggles - Goggles are protective devices intended to fit the face immediately surrounding the eyes in order to shield the eyes from a variety of hazards. While they are primary protectors and may be used alone, they also may be used in conjunction with other protectors.

7.4 Face shields - Face shields are protective devices intended to shield the wearer's face, or portions thereof, in addition to the eyes, from certain hazards. Face shields are secondary protectors and shall be used with primary protectors.

7.5 Cutting goggles - Cutting goggles are protective devices designed to protect the eyes from radiation and impact. Goggles are primary protectors and in some situations must be supplemented with face shields. See Table 2 for selection guidelines.

7.6 Welding helmets - Welding helmets are protective devices intended to shield the eyes and face from optical radiation and impact. Welding helmets are secondary protectors and shall be used only in conjunction with primary protectors such as safety spectacles or goggles. See Table 3 for selection guidelines.

7.7 Prescription Spectacles - For personnel that wear prescription spectacles, OHM provides prescription safety spectacles with side shields. It is mandatory that prescription safety spectacles not be altered by the employee and be worn at all times when safety spectacles are required.

7.8 Contact lenses - Contact lenses are not permitted to be worn where accidental eye contact with chemical agents or physical materials is possible. OHM provides prescription spectacles and other protective devices for use in these situations.

7.9 Shaded lenses - Shaded lenses are not to be worn indoors or under low light conditions.

8. SAFETY HEADGEAR

All OHM employees, subcontractors, and visitors shall wear safety headgear meeting the requirements of ANSI document Z89.1-1986 titled "Protective Headwear for Industrial Workers - Requirements" when exposed to overhead hazards.

8.1 Requirement - Safety headgear shall be worn by all personnel while engaged in work where there is a hazard of falling objects, low overhead restrictions, and other overhead hazards exist. Safety headgear may also be required to be worn by contractual requirements.

8.2 Use - Safety headgear must be worn as prescribed by the manufacturer in the bill front position unless the headgear was approved to be worn in another position.

8.3 Modifications - Safety headgear shall not be painted, drilled or modified in any manner. Use of safety related headgear stickers are permitted.

8.4 Life Expectancy - No maximum mandatory service life is specified by regulation for safety headgear. However, a hard hat should be removed from service if chemical corrosion, cracks, deformities, worn suspension, or discoloration is noted with the unit.

9. SAFETY FOOTWEAR

All OHM employees, subcontractors, and visitors that enter OHM project sites and are exposed to foot hazards shall wear footwear meeting the ANSI document Z41 - 1991 titled "Protective Footwear" during operations posing foot injury.

9.1 Project Sites - Steel toe and shank leather work boots shall be worn on all OHM project sites. High top or low top sneakers, western style boots, or other footwear even though ANSI approved are not appropriate for the activities encountered at hazardous waste and emergency response sites and shall not be worn.

9.2 OHM Facilities and Shops - Personnel working at OHM shops and facilities have the option of wearing other types of ANSI approved safety work shoes and boots provided they are appropriate for the tasks being performed. The supervisor of the work area is responsible to decide what type footwear is appropriate.

10. HAND PROTECTION/GLOVES

OHM employees, subcontractors, and visitors will don appropriate gloves when engaged in any operation that presents a hazard to the hands.

10.1 Use - Appropriate work gloves shall be available for hand protection against heat and flame, cold, chemicals, petroleum products, corrosive materials, moisture, mechanical abrasion, electricity, and sharp and rough surfaces.

10.2 Selection - Glove selection of the appropriate hand protection shall be based on an evaluation of the performance characteristic of the hand protection relative to the task(s) to be performed, chemical concentration and properties, physical conditions present, duration of use, and the hazards and potential hazards identified. The type of work gloves used must be approved by the regional health and safety director/manager and designee as specified in the HASP for the particular task.

10.3 Electrical - When working on high voltage (480 volts and above) electrical equipment, electrically tested high voltage gloves will be worn. Leather protection will be worn over these gloves. (NOTE: Only authorized personnel are permitted to work on High Voltage electrical equipment).

11. PROTECTIVE CLOTHING

OHM employees, subcontractors, and visitors will don appropriate protective clothing when engaged in any operation that presents a hazard to the body.

11.1 Use - Appropriate clothing shall be available for body protection against heat and flame, cold, chemicals, petroleum products, corrosive materials, moisture, mechanical abrasion, electricity, and sharp and rough surfaces.

11.2 Selection - Clothing selection of the appropriate body protection shall be based on an evaluation of the performance characteristic of the body protection relative to the task(s) to be performed, chemical concentration and properties, physical conditions present, duration of use, and the hazards and potential hazards identified. The type of protective clothing used must be approved by the regional health and safety director/manager and designee and specified in the HASP for the particular task.

12. TOTALLY-ENCAPSULATING CHEMICAL PROTECTIVE SUITS

Totally-encapsulating chemical protective suits (Level A) shall be used in conditions where skin absorption of a hazardous substance may result in a substantial possibility of immediate death, immediate serious illness or injury, or impair the ability to escape.

12.1 Use - OHM will only use Level A protection when all other reasonable efforts of controlling employee exposure through engineering or administrative means are not possible.

12.2 Authorization - Level A protection may only be used after authorization of the regional health and safety director/manager has been granted.

12.3 Health and Safety Personnel - An appropriately experienced health and safety employee must be assigned to the project site where Level A is to be used. They must evaluate that the following items are ready:

- Communications
- Decontamination
- Emergency rescue procedures and personnel
- Emergency medical attention

12.4 OHM will discard and properly dispose of any Level A suit which has come in contact with chemical contaminants or sustained physical damage at least at the end of the project.

13. LOANING PERSONAL PROTECTIVE EQUIPMENT

OHM personnel should not loan OHM personal protective equipment to any client, subcontractor, or visitor personnel. If there are urgent circumstances, such as an emergency response where the equipment cannot be obtained elsewhere and chemical exposure is possible, OHM personnel can loan personal protective equipment such as respirators, protective clothing and other safety equipment to client personnel or personnel from other organizations. However because of the potential liability involved, approval of senior OHM management is required as well as the requirement that a representative of the company and the individual using the equipment execute an OHM Indemnification and Release Agreement. A copy of this agreement is attached in Appendix A.

13.1 Execution of Indemnification and Release Agreement - In general, the following will be required BEFORE the personal protective equipment may be loaned:

- The OHM Regional Vice President (or designee) must specifically authorize the loaning of personal protective equipment on the particular project.
- An authorized representative of the company whose personnel will use the equipment must sign the Indemnification and Release Agreement.
- The individual who will use the equipment must also sign the Indemnification and Release Agreement attesting to the fact that the individual is either experienced in the use of the equipment or has been given instruction on the safe use of the equipment and is medically qualified to wear the equipment.
- An OHM representative must also sign the form as a witness to the above.

13.2 Contractual Requirement - An indemnification and release agreement is not required if providing personal protective equipment to clients or regulatory personnel is a contractual requirement.

13.3 Exemptions - Hard hats, safety glasses, hearing protection, and protective clothing provided for cleanliness is exempted for the indemnification requirement. Instruction should be provided to the individual prior to wearing.

OHM Remediation
Services Corp.
A Subsidiary of OHM Corporation

APPENDIX A
OHM REMEDIATION SERVICES CORP.
INDEMNIFICATION AND RELEASE AGREEMENT
FOR PERSONAL PROTECTION CLOTHING

FOR AND IN CONSIDERATION OF the use by the undersigned of property belonging to OHM Remediation Services Corp. (hereinafter referred to as "OHM") and which may include full-face mask respirators, self-contained breathing apparatus, and other equipment and supplies, and other good and valuable consideration, the undersigned , for himself and his successors, and assigns, does hereby release and discharge OHM, its officers, employees, agents, and subcontractors from any and all claims, actions, demands, damages, costs, loss of services, expenses, compensation, third-party actions, or suits, including attorneys fees, arising and resulting from the aforementioned use of property, equipment, or supplies belonging to OHM.

In addition, the undersigned, on behalf of his employer, principal, himself, and his successors, and assigns, agrees to release, save, and hold harmless, protect, indemnify, and defend OHM, and its officers, employees, agents, and subcontractors against any and all claims, actions, and expenses as above described, whether for bodily injury, property damage or destruction, or both, arising or resulting in any way from the use by the undersigned of property of OHM and agrees to save, hold harmless, protect, indemnify, and defend OHM against any such claims, actions, or expenses, referenced above, that might be brought against OHM by any third persons or the heirs, successors, executors or assigns of the undersigned.

The undersigned acknowledges by signing that he has carefully read this Agreement, understands the contents thereof, and has freely and voluntarily signed the same.

EXECUTED on _____, 19___.

1. OHM Regional Vice President (or designee) authorizing use of equipment:

   _____

2. CLIENT OR SUBCONTRACTOR REPRESENTATIVE AUTHORIZING EQUIPMENT USE:

   I authorize the individual(s) in 3. below to use OHM provided personal protective equipment

   Company Name_____

   Sign Name_____

   Print Name_____

   Title_____

3. INDIVIDUAL USING EQUIPMENT: I certify that I am familiar with the equipment and medically qualified to wear the equipment

   Company Name_____

   Sign Name_____

   Print Name_____

   NOTE: A continuation sheet can be used if more than one individual is to be certified to use equipment

4. OHM Representative Acknowledging Signatures:

   Sign Name_____

OHM Remediation Services Corp.
A Subsidiary of OHM Corporation

TABLE 1
FACE PROTECTION SELECTION GUIDELINES

Hazard	Protection
Flying fragments, objects, large chips, particles, sand, and dirt from chipping, grinding, machining, masonry work, riveting, and sanding	Safety spectacles or goggles Supplement with face shield for severe exposure
Chemical splash from corrosive and chemical handling, pressure washing operations shield for severe exposure	Goggles Supplement with face
Nuisance dust from woodworking, buffing, and general dusty conditions	Safety spectacles or goggles
Hot sparks from grinding operations	Safety spectacles or goggles Supplement with face shield for severe exposure
Molten metal from torch cutting operations	Shaded cutting goggles (see Table 3) and face shield
Welding operations	Safety spectacles and shaded welding hood (see Tables 2)

TABLE 2

GUIDE FOR CUTTING SHADE NUMBERS

Operation	Plate Thickness	Minimum Protective Shade
Gas Welding		
Light	Under 1/8	4 or 5
Medium	1/8 to 1/2	5 or 6
Heavy	over 1/2	6 or 8
Oxygen Cutting		
Light	Under 1	3 or 4
Medium	1 to 6	4 or 5
Heavy	Over 6	5 or 6

TABLE 3

GUIDE FOR WELDING SHADE NUMBERS

Operation	Electrode Size 1/32 inch	Arc Current (A)	Minimum Protective Shade	Suggested* Shade No. (Comfort)
Shielding metal arc welding	Less than 3	Less than 60	7	—
	3-5	60-160	8	10
	5-8	160-250	10	12
	More than 8	250-550	11	14
Gas metal arc welding and flux cored arc welding		Less than 60	7	—
		60-160	10	11
		160-250	10	12
		250-500	10	14
		150-500	10	14
Air carbon	(Light)	Less than 500	10	12
Air cutting	(Heavy)	500-1000	11	14
Plasma arc welding		Less than 20	6	6 to 8
		20-100	8	10
		100-400	10	12
		400-800	11	14
Plasma arc cutting	(Light)	Less than 300	8	9
	(Medium)	300-400	9	12
	(Heavy)	400-800	10	14
Torch brazing		—	—	3 or 4
Torch soldering		—	—	2
Carbon arc welding		—	—	14

*As a rule of thumb, start with a shade that is too dark to see the weld zone. Then go to a lighter shade which gives sufficient view of the weld zone without going below the minimum. In oxyfuel gas welding or cutting where the torch produces a high yellow light, it is desirable to use a filter lens that absorbs the yellow or sodium line in the visible light of the (spectrum) operation.

APPENDIX A
HEALTH AND SAFETY PROCEDURES

JOB SAFETY ANALYSIS FOR TANK REMOVAL AND CLEANING

AIR MONITORING: "ACTION LEVELS"
PID: <1 PPM, LEVEL D; ≥1 PPM <5 PPM, LEVEL C; >5 PPM LEVEL B
LEL/O_2: ≥10% LEL, STOP WORK, EVACUATE; <20.9% O_2, LEVEL B; <19.5% O_2, MECHANICAL VENTELATION, CONSTANT MONITORING

Task Breakdown	Potential Hazards	Hazard Control Measures	Personal Protective Clothing and Equipment	Air Monitoring Devices
Vac Truck Operations	Fire/ Explosion from Ignition of flammable vapors	• Test atmospheres with combustible gas meter in areas where flammable materials are handled • Eliminate sources of ignition from the work area • Prohibit smoking • Post "NO SMOKING" signs • Shut-off all fuel powered equipment during refueling • Use grounding and bonding during to eliminate static discharge during vac truck operations • Prohibit storage, transfer of flammable liquids in plastic containers • Vent vac-truck air discharge downwind, away from vehicle engine, work areas • Provide ABC (or equivalent) fire extinguishers in all work and flammable storage areas • Store combustible materials away from flammables		LEL/O_2
	High Noise Levels	• Use hearing protection when exposed to excessive noise levels (greater than 85 dBA over an 8-hour work period)	Ear plugs	
	Slips, Trips, Falls	• Clear walkways, work areas, of equipment, vegetation, excavated material, tools and debris • Mark, identify, or barricade other obstructions • Use fall protection working on Vac-truck catwalks (above 6 feet)		
	Low Ambient Temperature	• Monitor for Cold stress in accordance with OHM Health and Safety Procedures # 3-5 • Provide fluids to prevent worker dehydration		
Excavation of Tank	Underground Utilities	• Identify all utilities around the site before work commences • Cease work immediately if unknown utility markers are uncovered • Use manual excavation within 3 feet of known utilities		

JOB SAFETY ANALYSIS FOR TANK REMOVAL AND CLEANING				
AIR MONITORING: "ACTION LEVELS" **PID: <1 PPM, LEVEL D; ≥ 1 PPM <5 PPM, LEVEL C; >5 PPM LEVEL B** ***LEL/O_2: ≥ 10% LEL, STOP WORK, EVACUATE; <20.9% O_2, LEVEL B; <19.5% O_2, MECHANICAL VENTELATION, CONSTANT MONITORING***				
Task Breakdown	**Potential Hazards**	**Hazard Control Measures**	**Personal Protective Clothing and Equipment**	**Air Monitoring Devices**
Excavation of Tank (Continued	Struck By/ Against Heavy Equipment	• Use reflective warning vests worn when exposed to vehicular traffic • Isolate equipment swing areas • Make eye contact with operators before approaching equipment • Understand and review hand signals	Warning vest, Hard hat, Safety glasses	
	Sharp Objects	• Wear cut resistant work gloves when the possibility of lacerations or other injury may be caused by sharp edges or objects • Maintain all hand and power tools in a safe condition • Keep guards in place during use	Wizard® or similar cut resistant gloves	
	High Noise Levels	• Use hearing protection when exposed to excessive noise levels (greater than 85 dBA over an 8-hour work period)	Ear plugs	

JOB SAFETY ANALYSIS FOR TANK REMOVAL AND CLEANING				
AIR MONITORING: "ACTION LEVELS" **PID: <1 PPM, LEVEL D; ≥1 PPM <5 PPM, LEVEL C; >5 PPM LEVEL B** **LEL/O_2: ≥10% LEL, STOP WORK, EVACUATE; <20.9% O_2, LEVEL B; <19.5% O_2, MECHANICAL VENTELATION, CONSTANT MONITORING**				
Task Breakdown	**Potential Hazards**	**Hazard Control Measures**	**Personal Protective Clothing and Equipment**	**Air Monitoring Devices**
Excavation of Tank (Continued)	*Excavation Wall Collapse*	• *Construct diversion ditches or dikes to prevent surface water* from entering excavation • Provide good drainage of area adjacent to excavation • Collect ground water/rain water from excavation and dispose of properly • Store excavatec material at least 2 feet from the edge of the excavation; prevent excessive loading of the excavation face • Provide sufficient stairs, ladders, or ramps when workers enter excavatio ıs over 4 feet in depth • Place ladders no more than 25 feet apart laterally • Treat excavations over 4 feet deep as confined spaces • Complete confined space permit entry procedure • Monitor atmosphere for flammable/toxic vapors, and oxygen deficiency • Slope, bench, shore, or sheet excavations over 5 feet deep if worker entry is required • Assign a competent person to inspect, decide soil classification, proper sloping, the correct shoring, or sheeting • Inspect excavations (when personnel entry is required) daily, whenever conditions change • Provide at least two means of exit for personnel working in excavations.	*Hard hat, Safety glasses*	
	Slips, Trips, Falls	• Clear, walkways of equipment, vegetation, excavated material, tools and debris • Mark, identify, or barricade other obstructions		
	Handling Heavy Objects	• Observe proper lifting techniques • Obey sensible ifting limits (60 lb. maximum per person manual lifting) • Use mechanical lifting equipment (hand carts, trucks) to move large, awkward loads		

JOB SAFETY ANALYSIS FOR TANK REMOVAL AND CLEANING

AIR MONITORING: "ACTION LEVELS"
PID: <1 PPM, LEVEL D; ≥1 PPM <5 PPM, LEVEL C; >5 PPM LEVEL B
LEL/O_2: ≥10% LEL, STOP WORK, EVACUATE; <20.9% O_2, LEVEL B; <19.5% O_2, MECHANICAL VENTELATION, CONSTANT MONITORING

Task Breakdown	Potential Hazards	Hazard Control Measures	Personal Protective Clothing and Equipment	Air Monitoring Devices
Excavation of Tank (Continued)	Inhalation and Contact with Hazardous Substances	• Provide workers proper skin, eye and respiratory protection based on the exposure hazards present • Review hazardous properties of site contaminants with workers before operations begin	Tyvek coveralls, nitrile gloves, latex or neoprene boots (see Section 5.0 HASP)	LEL/O_2, PID
	Low Ambient Temperature	• Moritor for Cold stress in accordance with OHM Health and Safety Procedures # 3-5 • Provide fluids to prevent worker dehydration		
Tank Cleaning	Fire/ Explosion	• Eliminate sources of ignition from the work area • Prohibit smoking • Provide ABC (or equivalent) fire extinguishers in all work, flammable storage areas and with fuel powered generators and compressors • Store flammable liquids in well ventilated areas • Prohibit storage, transfer of flammable liquids in plastic containers • Post "NO SMOKING" signs • Store combustible materials away from flammables • Store all compressed gas cylinders upright, caps in place when not in use • Separate Flammables and Oxidizers by 20 feet minimum		

JOB SAFETY ANALYSIS FOR TANK REMOVAL AND CLEANING

AIR MONITORING: "ACTION LEVELS"
PID: <1 PPM, LEVEL D; ≥1 PPM <5 PPM, LEVEL C; >5 PPM LEVEL B
LEL/O_2: ≥10% LEL, STOP WORK, EVACUATE; <20.9% O_2, LEVEL B; <19.5% O_2, MECHANICAL VENTELATION, CONSTANT MONITORING

Task Breakdown	Potential Hazards	Hazard Control Measures	Personal Protective Clothing and Equipment	Air Monitoring Devices
Tank Cleaning (Continued)	Flammable, Toxic, Oxygen deficient Atmospheres	• Test vessel atmosphere for flammable/toxic vapors, and oxygen deficiency • Obtain Confined Space Entry Permit signed by Supervisor/Safety Officer • De-energize, lock-out and tag all energized equipment • Provide written rescue plan • Review hazardous properties of site contaminants with entrants and safety observer • Review emergency procedures before work commences • Provide safety observer outside vessel • Wear proper level of PPE for the type of atmospheric contaminants • Use body harness, safety belt with tripod winch for possible rescue		LEL/O_2
	Burns	• Use proper work gloves, face shield/safety goggles, and leather apron to protect workers from skin burns when welding, cutting, and burning	Face shield, Safety goggles	
	Inhalation and Contact with Hazardous Substances	• Provide workers proper skin, eye and respiratory protection based on the exposure hazards present • Review hazardous properties of site contaminants with workers before operations begin	Tyvek coveralls, nitrile gloves, latex or neoprene boots (see Section 5.0 HASP)	LEL/O_2, PID
	Sharp Objects	• Wear cut resistant work gloves when the possibility of lacerations or other injury may be caused by sharp edges or objects • Maintain all hand and power tools in a safe condition • Keep guards in place during use	Wizard or similar cut resistant gloves	

JOB SAFETY ANALYSIS FOR TANK REMOVAL AND CLEANING

AIR MONITORING: "ACTION LEVELS"
PID: <1 PPM, LEVEL D; ≥1 PPM <5 PPM, LEVEL C; >5 PPM LEVEL B
LEL/O_2: ≥10% LEL, STOP WORK, EVACUATE; <20.9% O_2, LEVEL B; <19.5% O_2, MECHANICAL VENTELATION, CONSTANT MONITORING

Task Breakdown	Potential Hazards	Hazard Control Measures	Personal Protective Clothing and Equipment	Air Monitoring Devices
Backfilling	Struck By/ Against Heavy Equipment	• Use reflective warning vests worn when exposed to vehicular traffic • Isolate equipment swing areas • Make eye contact with operators before approaching equipment • Understand and review posted hand signals	Warning vest, Hard har, Safety Glasses	
	Slips, Trips, Falls	• Clear walkways of equipment, vegetation, excavated material, tools and debris • Mark, identify, or barricade other obstructions		
	Sharp Objects	• Wear cut resistant work gloves when the possibility of lacerations or other injury may be caused by sharp edges or objects • Maintain all hand and power tools in a safe condition • Keep guards in place during use	Leather gloves	
	Low Ambient Temperature	• Monitor for Cold stress in accordance with OHM Health and Safety Procedures # 3-5 • Provide fluids to prevent worker dehydration		

5.0 PROTECTIVE EQUIPMENT

This section addresses the various levels of personal protective equipment (PPE) which are or may be required at this job site. OHM personnel are trained in the use of all PPE utilized.

5.1 ANTICIPATED PROTECTION LEVELS

TASK	PROTECTION LEVEL	COMMENTS/MODIFICATIONS
Site Setup	Level D	Hardhat, steel-toe work boots, safety eye wear (safety glasses with side shields or goggles and face shield if splash or flying particles are likely) and hearing protection >85 dBA
Dioxin Sampling	Level C	Saranex-coated Tyvek coveralls, nitrile gloves, neoprene boots
PCB Cleanup	Level D+/C	Saranex-coated Tyvek coveralls, nitrile gloves, neoprene boots upgrade to Level C in high concentration areas
Decontamination		
SZ Activities not otherwise Classified		

JOB SAFETY ANALYSIS FOR CONCRETE FLOOR DEMOLITION				
AIR MONITORING: "ACTION LEVELS" **MINI-RAM: <5.0 MG/M^3 LEVEL D; <5.0 MG/M^3, LEVEL C**				
Task Breakdown	**Potential Hazards**	**Hazard Control Measures**	**Personal Protective Clothing and Equipment**	**Air Monitoring Devices**
Concrete Floor Demolition; Jack Hammer, Concrete Saw Operations	Struck by/ Against Heavy Equipment, Flying Debris, Protruding Objects	• Use reflective warning vests when exposed to vehicular traffic • Isolate equipment swing areas • Make eye contact with operators before approaching equipment • Barricade or enclose the demolition area • Restrict entry to the work area to heavy equipment operator(s) and signaler(s) during demolition • Wear hard hats, safety glasses with side shields, and steel-toe safety boots • Understand and review hand signals • Cease operations for electrical storms, high winds	Warning vests, Hard hat, Safety glasses	
	Slips, Trips, Falls	• Clear, walkways of equipment, vegetation, excavated material, tools and debris • Mark, identify, or barricade other obstructions		
	Sharp Objects	• Wear cut resistant work gloves when the possibility of lacerations or other injury may be caused by sharp edges or objects • Maintain all hand and power tools in a safe condition • Keep guards in place during use	Leather gloves	
	Handling Heavy Objects	• Observe proper lifting techniques • Obey sensible lifting limits (60 lb. maximum per person manual lifting) • Use mechanical lifting equipment (hand carts, trucks) to move large, awkward loads		
	High Noise Levels	• Use hearing protection when exposed to excessive noise levels (greater than 85 dBA over an 8-hour work period)	Ear plugs	

JOB SAFETY ANALYSIS FOR CONCRETE FLOOR DEMOLITION				
AIR MONITORING: "ACTION LEVELS" **MINI-RAM: <5.0 MG/M³ LEVEL D; <5.0 MG/M³, LEVEL C**				
Task Breakdown	**Potential Hazards**	**Hazard Control Measures**	**Personal Protective Clothing and Equipment**	**Air Monitoring Devices**
Concrete Floor Demolition; Jack Hammer, Concrete Saw Operations (Continued)	Inhalation and Contact with Hazardous Substances	• Provide workers proper skin, eye and respiratory protection based on the exposure hazards present • Review hazardous properties of site contaminants with workers before operations begin	Tyvek coveralls, nitrile gloves, neoprene boots (see Section 5.0)	Mini-RAM
	Low Ambient Temperature	• Monitor for Cold stress in accordance with OHM Health and Safety Procedures # 3-5 • Provide fluids to prevent worker dehydration		

Genium Publishing Corp.
One Genium Plaza
Schenectady, NY 12304-4690
(518) 377-8854

Material Safety Data Sheet Collection

2, 3, 7, 8-Tetrachlorodibenzo-*p*-dioxin (TCDD)
MSDS No. 906 Date of Preparation: 6/94

Section 1 - Chemical Product and Company Identification 44

Product/Chemical Name: 2, 3, 7, 8-Tetrachlorodibenzo-*p*-dioxin (TCDD)
Chemical Formula: $C_{12}H_4Cl_4O_2$
CAS No.: 1746-01-6
Synonyms: dioxin; dioxine; NCI-C03714; tetrachlorodibenzodioxin; 2, 3, 7, 8-tetrachlorodibenzo(b, e)(1, 4)dioxin; 2, 3, 7, 8-tetrachlorodibenzo-1, 4-dioxin; TCDBD; TCDD; 2, 3, 7, 8-TCDD; tetradioxin
Derivation: TCDD is not manufactured, but is formed as a by-product of chlorobenzenes, chlorophenols, and the herbicides 2, 4, 5-trichlorophenoxyacetic acid (2, 4, 5-T) and 2-(2, 4, 5-trichlorophenoxy)propionic acid (Silvex) which are produced from 2, 4, 5-trichlorophenol (TCP). 2, 4, 5-T, commonly known as Agent Orange, was the defoliant used during the Vietnam War. TCP, 2, 4, 5-T and Silvex are no longer commercially produced in the U.S. As a chemical and toxicological standard, TCDD can be prepared by catalytic condensation of potassium 2, 4, 5-trichlorophenate. TCDD has been released to the environment during the incineration of chemical wastes including chlorinated benzenes, chlorophenols, and biphenyl ethers, from the improper disposal of certain chlorinated chemical wastes, in emissions from wood burning in the presence of chlorine, in accidental fires involving transformers containing PCBs, and from the use of the herbicides 2, 4, 5-T and Silvex.
General Use: TCDD is an extremely toxic, unwanted by-product and essentially has no beneficial uses. It may be used as a research chemical. **Vendors:** Consult the latest *Chemical Week Buyers' Guide*. (73)

Section 2 - Composition / Information on Ingredients

2, 3, 7, 8-Tetrachlorodibenzo-*p*-dioxin, ca 100 %wt. TCDD normally persists as a contaminant in TCP in variable amounts (0.07-6.2 mg/kg). Consequently, the concentrations of TCDD in different batches of Agent Orange varied greatly with an average concentration of about 2 ppm.

OSHA PEL*	NIOSH REL	DFG (Germany) MAK
None established	Carcinogen, lowest feasible concentration.	None established
ACGIH TLV		
None established		

* A preliminary occupational exposure limit of 0.2 ng/m^3 (200 pg/m^3) is recommended. It provides an ample margin of safety to prevent chloracne and takes into consideration the chronic effects of animal studies and accidental human exposure. [Leung HW et al; *American Industrial Hygiene Association Journal*, 49 (9): 466-74 b(1988)]

Section 3 - Hazards Identification

☆☆☆☆☆ Emergency Overview ☆☆☆☆☆

TCDD is a colorless, crystalline solid at room temperature. It is highly toxic and a potential human carcinogen. Exposure to TCDD-contaminated materials may cause a severe and disabling acne-like rash that may persist for years (chloracne), metabolic disorders, and nervous system and liver damage. In animals, TCDD causes teratogenesis, tumorigenesis, and immunological dysfunction. Findings in humans are inconclusive, but human toxicology is under continuing investigation. Workers may be exposed to TCDD from residues from prior production or use of 2, 4, 5-T or Silvex, waste materials contaminated by TCDD, or contamination resulting from transformer fires. Take every precaution to avoid any exposure to TCDD.

Wilson Risk Scale
R 1
I 4
S 4*
K 1
*Skin absorption

HMIS
H 4†
F 1
R 0
†Chronic Effects
PPE‡
‡Sec. 8

Potential Health Effects

Primary Entry Routes: Inhalation (dust),* skin contact, ingestion.
Target Organs: Skin, liver, and nervous system.
Acute Effects
Inhalation: Shortness of breath, headaches, fatigue, severe muscle pains, weakness, and digestive disturbance. Most symptoms develop slowly, over many days.
Eye: Conjunctivitis and chemical burns.
Skin: Chemical burns. In most cases, chloracne appears within 2 to 4 weeks after initial exposure. It consists of blackheads with small, pale-yellow cysts. In severe cases, there may be papules (red spots) or even pustules (pus-filled spots). This acne-like rash appears on the cheekbones under the eyes and behind the ears in very mild cases. With increasing severity, the rest of the face and neck are affected and the outer upper arms, chest, back, abdomen, outer thighs and genitalia may be involved in varying degrees in the worst cases. In the worst cases, lesions may be active 15 or more years after the contact has ceased. Chloracne may also appear after ingestion or inhalation. Skin fragility, hirsutism (excessive growth of hair of normal or abnormal distribution), and photosensitivity may also occur.
Ingestion: Nausea, vomiting, and possible pancreatitis.

Copyright © 1994 by Genium Publishing Corporation. Any commercial use or reproduction without the publisher's permission is prohibited. Judgments as to the suitability of information herein for the purchaser's purposes are necessarily the purchaser's responsibility. Although reasonable care has been taken in the preparation of such information, Genium Publishing Corporation extends no warranties, makes no representations, and assumes no responsibility as to the accuracy or suitability of such information for application to the purchaser's intended purpose or for consequences of its use.

Carcinogenicity: The IARC, NTP, MAK, and NIOSH list TCDD as an IARC-2B (possibly carcinogenic to humans: inadequate evidence of carcinogenicity in humans but there is sufficient evidence of carcinogenicity in experimental animals), an NTP-2 (reasonably anticipated to be a carcinogen: limited evidence from studies in humans or sufficient evidence from studies in experimental animals), an MAK-A2 (unmistakably carcinogenic in animal experimentation only), and a NIOSH-X (carcinogen defined with no further categorization). OSHA does not list TCDD as a carcinogen.

Medical Conditions Aggravated by Long-Term Exposure: Skin, liver, nervous and endocrine system disorders.

Chronic Effects: Lack of energy, loss of sex drive, personality and mood changes, numbness, weakness and pain in the legs, liver damage, chloracne, and elevated blood lipids. TCDD increased the incidence of a variety of tumors in animals, but human data is inconclusive. Little is known of the human health effects (if any) as a result of long-term exposures to low concentrations.

Comments: The observed health effects from clinical or epidemiological studies of populations who were occupationally and non-occupationally exposed cannot be solely attributed to TCDD because of the concurrent exposure to 2, 4, 5-T and TCP and to other herbicides as well. There is no report of human exposure to TCDD alone.

* Vapor inhalation is unlikely because TCDD has a low vapor pressure.

Section 4 - First Aid Measures

Inhalation: Remove exposed person to fresh air and support breathing as needed.

Eye Contact: *Do not* allow victim to rub or keep eyes tightly shut. Gently lift eyelids and flush immediately and continuously with flooding amounts of water until transported to an emergency medical facility. Consult a physician immediately.

Skin Contact: *Quickly* remove contaminated clothing. Flush with water to remove solid particles; follow with a soap and water wash of exposed areas. For reddened or blistered skin, consult a physician.

Ingestion: Never give anything by mouth to an unconscious or convulsing person. Contact a poison control center. Unless the poison control center advises otherwise, have the *conscious and alert* person drink 1 to 2 glasses of water, then induce vomiting.

After first aid, get appropriate in-plant, paramedic, or community medical support.

Note to Physicians: For an acute exposure, obtain liver function tests, CBC, prothrombin time, serum lipids, and uroporphyrins. EMG may be useful in detecting subclinical neuropathy. Current analytical techniques to detect dioxins in human tissue specimens involve gas chromatography and mass spectrometry. Chloracne may respond to topical retinoic acid, and oral tetracyclines may help secondary pustular follicles. Resistant cases may require dermabrasion or acne surgery. Isotretinoin may be tried.

Special Precautions/Procedures: Emergency personnel should protect against contamination.

Section 5 - Fire-Fighting Measures

Flash Point: None reported.

Autoignition Temperature: None reported.

LEL: None reported

UEL: None reported.

Extinguishing Media: Use dry chemical, carbon dioxide, water spray, or foam extinguisher.

Unusual Fire or Explosion Hazards: None reported.

Hazardous Combustion Products: Toxic fumes of chlorine.

Fire-Fighting Instructions: Do not release runoff from fire control methods to sewers or waterways.

Fire-Fighting Equipment: Because fire may produce toxic thermal decomposition products, wear a self-contained breathing apparatus (SCBA) with a full facepiece operated in pressure-demand or positive-pressure mode.

Genium

Section 6 - Accidental Release Measures

Spill /Leak Procedures: Notify safety personnel of spill, evacuate all unnecessary personnel, remove heat and ignition sources, and provide adequate ventilation. Cleanup personnel should protect against skin and eye contact and dust inhalation.

Small Spills: Carefully collect and place in sealed containers for disposal.

Large Spills

Containment: For large spills, dike far ahead of liquid spill for later disposal. Do not release into sewers or waterways.

Cleanup: Avoid generating dust. *Do not* sweep! Provide an organized procedure of containment, collection, and disposal of contaminated solutions and residues generated during cleanup. Provide separate facilities for decontamination of large equipment. Conduct repetitive wash/rinse cycles separately, either by using different locations or by spacing in time.

Regulatory Requirements: Follow applicable OSHA regulations (29 CFR 1910.120). For specific recommendations, contact your Department of Environmental Protection or your regional EPA office.

Section 7 - Handling and Storage

Handling Precautions: Handle with extreme caution. Take all the necessary precautions to avoid any exposure.

Storage Requirements: Store in tightly closed and properly labeled containers in a cool, well-ventilated area.

Section 8 - Exposure Controls / Personal Protection

Engineering Controls: Isolate work areas involving TCDD or TCDD-contaminated materials.

Copyright © 1994 Genium Publishing Corporation. Any commercial use or reproduction without the publisher's permission is prohibited.

Ventilation: Provide general or local exhaust ventilation systems to maintain airborne concentrations as low as possible. Local exhaust ventilation is preferred because it prevents contaminant dispersion into the work area by controlling it at its source. (103) **Administrative Controls:** Consider preplacement and periodic medical examinations with emphasis on the skin, liver, nervous and endocrine systems. Regularly monitor glassware, bench tops, instruments, and tools with wipe tests (wipe with filter paper and measure amount of TCDD). **Respiratory Protection:** Seek professional advice prior to respirator selection and use. Follow OSHA respirator regulations (29 CFR 1910.134) and, if necessary, wear a MSHA/NIOSH-approved respirator. Select respirator based on its suitability to provide adequate worker protection for given working conditions, level of airborne contamination, and presence of sufficient oxygen. For situations where TCDD contamination is low (e.g., exposure to dust contaminated with low levels of TCDD), wear an air-purifying respirator until the extent and characterization of the exposure can be determined. For materials highly contaminated with TCDD, wear respirators that consist of self-contained breathing apparatus with a full facepiece operated in a pressure-demand or other positive pressure mode. An alternate method utilizes a combination Type C supplied-air respirator, with full facepiece, operated in a pressure-demand mode and equipped with auxiliary positive pressure self-contained air supply. For emergency or nonroutine operations (cleaning spills, reactor vessels, or storage tanks), wear an SCBA. *Warning! Air-purifying respirators do not protect workers in oxygen-deficient atmospheres.* If respirators are used, OSHA requires a written respiratory protection program that includes at least: medical certification, training, fit-testing, periodic environmental monitoring, maintenance, inspection, cleaning, and convenient, sanitary storage areas. **Protective Clothing/Equipment:** Consider disposable clothing due to the uncertainty of adequate decontamination. Wear protective clothing consisting of both outer (zippered coverall with attached hood and draw string or elastic sleeves, gloves and closure boots) and inner (cotton overalls, undershirts, undershorts, gloves, and socks) garments. For dust or particulate exposure, wear coveralls of a non-woven fabric such as Tyvek or spun bonded polyethylene. For exposure to liquids, wear coveralls, gloves, and boots made of chemically resistant materials such as Saranax coated Tyvek or butyl, nitrile, or neoprene rubber. Wear protective eyeglasses or chemical safety goggles, per OSHA eye- and face-protection regulations (29 CFR 1910.133). Contact lenses are not eye protective devices. Appropriate eye protection must be worn instead of, or in conjunction with contact lenses. **Safety Stations:** Make emergency eyewash stations, safety/quick-drench showers, and washing facilities available in work area. **Contaminated Equipment:** Shower and change clothes after potential exposures or at the end of the work day. Separate contaminated work clothes from street clothes. Launder before reuse. Place disposable clothing in marked and approved containers for disposal. Remove this material from your shoes and clean personal protective equipment. To prevent cross-contact, provide segregated decontamination locations with separate, controlled, and well-marked entry/exit routes and locations. **Comments:** Never eat, drink, or smoke in work areas. Practice good personal hygiene after using this material, especially before eating, drinking, smoking, using the toilet, or applying cosmetics.

Section 9 - Physical and Chemical Properties

Physical State: Solid
Appearance and Odor: Colorless needles
Water Solubility: 19.3 ng/L
Other Solubilities: *o*-dichlorobenzene (1.4 g/L); chlorobenzene (0.72 g/L); benzene (0.57 g/L); chloroform (0.37 g/L); acetone (0.11 g/L); *n*-octanol (0.05 g/L); methanol (0.01 g/L); lard oil (0.04 g/L)

Vapor Pressure: 7.4×10^{-10} mm Hg at 77 °F (25 °C)
Formula Weight: 322
Melting Point: 581-583 °F (305-306 °C)
Octanol/Water Partition Coefficient: log Kow= 7.02
Henry's Law Constant: 1.62×10^{-5} atm m^3/mole at 25 °C (estimated)

Section 10 - Stability and Reactivity

Stability: TCDD is relatively stable toward heat, acids, and alkalis. It is changed chemically when exposed in isooctane or *n*-octanol to UV light. **Polymerization:** Hazardous polymerization cannot occur. **Chemical Incompatibilities:** None reported. **Conditions to Avoid:** Avoid heat and ignition sources. **Hazardous Decomposition Products:** Thermal oxidative decomposition of TCDD can produce toxic fumes of chlorine. Decomposition begins at 932 °F (500 °C) and complete decomposition occurs within 21 sec at 1472 °F (800 °C).

Section 11- Toxicological Information

Toxicity Data:*

Eye Effects:
Rabbit, eye: 2 mg caused moderate irritation.
Acute Effects:
Human, skin, TD_{Lo}: 107 µg/kg produced dermatitis and allergic reaction.
Mammal, oral, LD_{50}: 4200 ng/kg produced changes of the liver, kidney, ureter, bladder, and spleen.
Rat, oral, LD_{50}: 20 µg/kg
Reproductive Effects:
Monkey, oral, TD_{Lo}: 92 ng/kg (46 weeks prior to mating, on each day during gestation, and for 17 weeks following birth) caused effects on the newborn (behavioral; delayed effects).
Genetic Effects:
Human cell: 100 pmol/L caused unscheduled DNA synthesis.

Copyright © 1994 Genium Publishing Corporation. Any commercial use or reproduction without the publisher's permission is prohibited.

Genetic Effects *(continued)*:
Human cell: 10 nmol/L caused DNA inhibition.
Tumorigenic Effects:
Rat, oral: 52 µg/kg/2 yr (intermittent) caused liver and thyroid tumors.
Rat, oral: 27 µg/kg/65 weeks (continuous) caused liver and kidney tumors.
Multiple Dose:
Rat, oral: 6500 ng/kg/13 weeks (intermittent) caused changes in liver and thymus weight and pigmented or nucleated red blood cells.
Mouse, skin: 97 µg/kg/13 weeks (intermittent) caused diffuse hepatitis (hepatocellular necrosis); changes in spleen; and death.
* See NIOSH, *RTECS* (HP3500000), for additional toxicity data.

Section 12 - Ecological Information

Environmental Transport: Bioconcentration will occur in aquatic organisms. Due to TCDD's low solubility in water and lipids as well as its low partition coefficient in lipids, TCDD is not likely to accumulate in as many biological systems as DDT.
Environmental Degradation: When released to the atmosphere, gas-phase TCDD is degraded by reaction with hydroxyl radicals and direct photolysis (half-life =8.3 days). Particulate-phase TCDD may be physically removed from air by wet and dry deposition. TCDD may be transported long distances through the atmosphere with surface water sediments being an ultimate environmental sink of airborne particulates. TCDD will absorb to sediment and limit the overall rate by which TCDD is removed from water. TCDD near the water's surface may experience significant photodegradation. 1.5 yr is the persistence half-life of TCDD in lakes. TCDD is generally resistant to biodegradation. Photodegradation on terrestrial surfaces may be an important transformation process. During warm conditions, volatilization from soil surfaces may be a major removal mechanism. Volatilization of TCDD from dry soil surfaces is likely to be faster than from wet soil surfaces. TCDD that has been mixed into soil depths beneath the upper surface boundary will volatilize extremely slowly. On soil surfaces, persistence half-life of TCDD on soil surfaces varies from less than 1 yr to 3 yr. Half-lives in soil interiors may be as long as 12 yr.
Soil Absorption/Mobility: TCDD is immobile in soil and is not expected to leach. Lateral movement due to surface erosion may occur.

Section 13 - Disposal Considerations

Disposal: Contact your supplier or a licensed contractor for detailed recommendations. Follow applicable Federal, state, and local regulations.

Section 14 - Transport Information

DOT Transportation Data (49 CFR 172.101):

Shipping Name: Environmentally hazardous substances, solid, n.o.s.*
Shipping Symbols: —
Hazard Class: 9
ID No.: UN3077
Packing Group: III
Label: Class 9
Special Provisions (172.102): 8, B54, N50

Packaging Authorizations
a) Exceptions: 173.155
b) Non-bulk Packaging: 173.213
c) Bulk Packaging: 173.240

Quantity Limitations
a) Passenger, Aircraft, or Railcar: None
b) Cargo Aircraft Only: None

Vessel Stowage Requirements
a) Vessel Stowage: A
b) Other: —

* If it is in a quantity, in one package which equals or exceeds the RQ of 1 lb (0.454 kg).

Section 15 - Regulatory Information

EPA Regulations: RCRA Hazardous Waste (40 CFR 261.33): Not listed
Listed as a CERCLA Hazardous Substance (40 CFR 302.4) specific per CWA, Sec. 307(a)
CERCLA Reportable Quantity (RQ), 1 lb (0.454 kg)
SARA Toxic Chemical (40 CFR 372.65): Not listed
SARA EHS (Extremely Hazardous Substance) (40 CFR 355): Not listed

OSHA Regulations: Air Contaminant (29 CFR 1910.1000, Table Z-1, Z-1-A): Not listed

Section 16 - Other Information

References: 73, 103, 124, 132, 136, 139, 184, 187, 189, 190, 193
Prepared By MJ Wurth, BS **Industrial Hygiene Review** PA Roy, MPH, CIH **Medical Review** T Thoburn, MD, MPH
Disclaimer: Judgments as to the suitability of information herein for the purchaser's purposes are necessarily the purchaser's responsibility. Although reasonable care has been taken in the preparation of such information, Genium Publishing Corporation extends no warranties, makes no representations, and assumes no responsibility as to the accuracy or suitability of such information for application to the purchaser's intended purpose or for consequences of its use.

Copyright © 1994 Genium Publishing Corporation. Any commercial use or reproduction without the publisher's permission is prohibited.

OHM Remediation Services Corp.
A Subsidiary of OHM Corporation

WORK PLAN ADDENDUM
PCB REMOVAL ACTION
FORMER NAVAL TRAINING CENTER BAINBRIDGE
PORT DEPOSIT, MARYLAND

Prepared for:

DEPARTMENT OF THE NAVY
Atlantic Division
Contract No. N62470-93-D-3032/137
EFA Chesapeake - NAVFACENGCOM
901 M Street, S.E., Building 212
Washington, DC 20374-5018

Prepared by:

OHM Remediation Services Corp.
Pittsburgh, Pennsylvania
A Subsidiary of OHM Corporation

Reviewed by:

Daniel Pringle
Senior Project Engineer

Lawrence J. Stearns, P.E.
Senior Project Manager

December 1, 1997
Delivery Order #137
OHM Project No. 19568

OHM Remediation Services Corp.
A Subsidiary of OHM Corporation

December 1, 1997

Mr. Frank Zepka
EFA Chesapeake Division - NAVFACENGCOM
Building 212 - Code 1812
901 M Street SE
Washington, DC 20374-5018

RE: FINAL WORK PLAN ADDENDUM - PCB REMOVAL ACTION
NTC - BAINBRIDGE, MARYLAND
LANTDIV CONTRACT NO. N62470-93-D-3032/DO #137
OHM PROJECT NO. 19568

Dear Mr. Zepka:

Enclosed are four copies of the final Work Plan Addendum for the above-referenced project. This is for the scope of work in contract Modification #3 issued 29 September 1997. OHM has incorporated all revisions requested by the Navy, MDE, and USEPA. Two copies each have been forwarded to Mr. Kim Lemaster at MDE and Mr. Robert Lausch at USEPA.

If you have any questions or comments, please contact me at 800/284-6462 at your convenience.

Very truly yours,
OHM Remediation Services Corp.

by Lawrence J. Stearns, P.E.
Senior Project Manager

LJS:pjc
Enclosures

cc: K. Lemaster, MDE (2 copies)
R. Lausch, USEPA (2 copies)
J. Haste, LANTDIV (w/enclosures)
J. Franz, OHM (w/o enclosures)
D. Leadenham, OHM (w/enclosures)
Project File 19568

1000 RIDC Plaza, Suite 600 ■ Pittsburgh, Pennsylvania 15238-2928 ■ 412-963-2300

TABLE OF CONTENTS

1.0 INTRODUCTION 1-1

2.0 SCOPE OF WORK 2-1
2.1 INVESTIGATIVE SAMPLING AND ANALYTICAL WORK 2-1
2.2 REMEDIATION OF IMPACTED MATERIALS 2-1
2.3 CONFIRMATION SAMPLING AND ANALYTICAL WORK 2-1
2.4 GEOPHYSICAL INVESTIGATION 2-2
2.5 DISPOSAL OF IMPACTED MATERIALS 2-2
2.6 ACTION LEVELS 2-2
2.7 TARGET SCHEDULE 2-2

3.0 SITE WORK ACTIVITIES 3-1
3.1 MOBILIZATION AND SITE SETUP 3-1
3.2 SAMPLING AND ANALYSIS 3-1
3.2.1 Investigative Sample Locations 3-2
3.2.1.1 Building 628 and Switch Yard 3-3
3.2.1.2 Building 693 - Lower Mechanical Room 3-4
3.2.1.3 Building 117 - UST 3-4
3.2.2 Confirmation Sample Locations 3-5
3.2.2.1 Building 628 and Switch Yard 3-5
3.2.2.2 Building 693 3-6
3.2.2.3 Building 117 UST 3-6
3.2.3 Sample Collection 3-6
3.2.2.1 Soil, Detritus, and Sediment Samples 3-6
3.2.2.2 Concrete Samples 3-7
3.2.2.3 Dioxin Samples 3-7
3.2.2.4 Quality Assurance/Quality Control Samples 3-7
3.2.2.5 Sample Numbering 3-7
3.2.4 Analytical Methods 3-8
3.2.4.1 Field Analysis 3-8
3.2.4.2 Laboratory Analysis 3-8
3.2.5 Data Deliverables 3-9
3.3 UNDERGROUND STORAGE TANK REMOVAL 3-9
3.4 DRUM REMOVAL 3-10
3.5 GEOPHYSICAL STUDY 3-10
3.6 PCB-CONTAMINATED MATERIAL REMOVAL 3-10
3.6.1 Building 628 Switch Yard 3-10
3.6.2 Building 693 3-11
4.0 SITE HEALTH AND SAFETY 4-1

SHOP DRAWINGS
APPENDIX A - HEALTH AND SAFETY PROCEDURES

1.0 INTRODUCTION

OHM Remediation Services Corp. (OHM) has been contracted by the Navy to perform a PCB removal action and additional site cleanup work at the former Naval Training Center at Bainbridge, Maryland (NTCB). This additional work is being performed under Contract No. N62470-93-D-3032, Delivery Order No. 137, as Modification No. 3 issued September 29, 1997.

The scope of this additional work is discussed in the subsequent sections of this document. Many of the work activities are similar to work previously conducted at NTCB by OHM under the original delivery order and several of the procedures developed for the original work will apply. These detailed procedures can be found in the OHM Work Plan (issued 18-Apr-97), Quality Control Plan, and Health and Safety Plan.

2.0 SCOPE OF WORK

The scope of work for this additional cleanup action was prepared by the Navy (EFACHES - NAVFACENGCOM) and is entitled "Chemical Cleanup at NTC-Bainbridge: PCB Removal Action" dated 2-Sep-97. In broad terms, the work involves the following items at Building 628 (Main Substation and Switch Yard), Building 693 (Water Treatment Plant), and other minor locations. The work areas are shown on Sheets SD-02 through SD-04. Other activities, such as mobilization, site setup, site restoration, and demobilization, are briefly discussed in Section 3.0.

The target analytes for this removal action includes polychlorinated biphenyls (PCBs), di-and trichlorobenzenes (DCB and TCB, respectively), polychlorinated dibenzo-*p*-dioxins and polychlorinated dibenzofurans (dioxins) and gasoline and diesel range total petroleum hydrocarbons (TPH).

2.1 INVESTIGATIVE SAMPLING AND ANALYTICAL WORK

Investigative samples will be collected to determine the presence and extent of impacted materials. These samples will be tested with both field and laboratory analytical techniques.

- Building 628 Switch Yard - presence and extent of PCB in detritus from within stone layer
- Building 628 Switch Yard - presence and extent of PCB on concrete transformer pads
- Building 628 Switch Yard - presence of dioxin in ash and soil at selected locations
- Building 628 Switch Yard - presence of TCB and DCB in detritus layer at selected locations
- Building 628 Bus Bank Room - presence of dioxin in ash material from Main Bus cabinet
- Building 693 Lower Mechanical Room and Pit - presence and extent of PCB in floor
- Building 693 Lower Mechanical Room and Pit - presence and extent of PCB in sediments
- Building 693 Lower Mechanical Room and Pit - presence and extent of PCB on vertical surfaces.

2.2 REMEDIATION OF IMPACTED MATERIALS

Impacted materials will be collected and removed for off-base disposal.

- Building 628 Switch Yard - PCB impacted soil, stone, and concrete
- Building 693 Lower Mechanical Room - PCB impacted concrete and sediments
- Building 117 - remove an underground storage tank (UST) and impacted soil (if present)
- Building 7 and 714 - drum removals
- Buildings 102 and 103 - removal of USTs (if any are found) and impacted soils (if present)

2.3 CONFIRMATION SAMPLING AND ANALYTICAL WORK

Confirmation samples will be collected to verify that the project action levels have been achieved. These samples will be tested with both field and laboratory analytical techniques.

- Building 628 Switch Yard - floors and sides of excavation areas

- Building 693 Lower Mechanical Room - concrete removal areas

2.4 GEOPHYSICAL INVESTIGATION

A geophysical investigation will be performed to locate USTs if they are present.

- Buildings 102 and 103 - perimeter investigation for possible USTs

2.5 DISPOSAL OF IMPACTED MATERIALS

Impacted materials collected for disposal will be transported and disposed of at approved off-base facilities.

- Provide transportation and disposal of impacted materials.
- Perform analytics on impacted materials as necessary to obtain disposal facility acceptance.

2.6 ACTION LEVELS

The following action levels, or cleanup criteria, have been prepared by the Navy in conjunction with the USEPA - Region 3 and the Maryland Department of the Environment.

MATRIX/AREA	ACTION LEVEL/CLEANUP CRITERIA
• PCB impacted soil	less than or equal to 10 mg/kg (ppm)
• PCB impacted concrete	less than or equal to 10 mg/kg (ppm)
• PCB impacted surfaces	less than or equal to 10 $\mu g/100\ cm^2$
• PCB encapsulated areas	less than or equal to 50 mg/kg (ppm)
• Dioxin impacted material	(to be determined on case-by-case basis)
• Petroleum impacted soil	less than or equal to 100 mg/kg (ppm) as TPH

2.7 TARGET SCHEDULE

The target milestone dates for the work are given below. These dates may change as the field work progresses and the scope of remediation becomes better known.

• 01-Dec-97	Mobilize
• 02-Dec-97	Begin initial investigative sampling and analytical
• 04-Dec-97	Drum removal at Buildings 7 and 714
• 08-Dec-97	Begin remediation at Building 628
• 08-Dec-97	Complete initial investigative sampling and analytical
• 10-Dec-97	Begin geophysical investigation at Buildings 102/103
• 12-Dec-97	Complete geophysical investigation at Buildings 102/103
• 12-Dec-97	Complete remediation at Building 628
• 12-Dec-97	Begin remediation at Building 693
• 15-Dec-97	Begin restoration of Building 628

- 16-Dec-97 Remove UST at Building 116
- 16-Dec-97 Complete restoration of Building 628
- 18-Dec-97 Complete remediation of Building 693
- 18-Dec-97 Begin disposal of impacted materials
- 19-Dec-97 Complete disposal of impacted materials
- 19-Dec-97 Begin restoration of Building 693
- 22-Dec-97 Complete restoration of Building 693
- 22-Dec-97 Begin site tear-down
- 23-Dec-97 Complete site tear-down
- 23-Dec-97 Demobilize
- 29-Dec-97 Begin draft close-out report
- 26-Jan-98 Submit draft close-out report
- 24-Feb-98 Comments due on draft close-out report
- 10-Mar-98 Submit final, merged close-out report.

3.0 SITE WORK ACTIVITIES

The following sections discuss the specific work activities discussed in Section 2.0. Additional procedures are included in the original Work Plan for activities similar to those conducted previously.

3.1 MOBILIZATION AND SITE SETUP

OHM will mobilize personnel and equipment from the New Jersey and Pennsylvania facilities. The command center, consisting of a field trailer and an assortment of vehicles and equipment, will be established at the same location used during previous work activities. The setup of facilities and structures will follow the procedures discussed in the original Work Plan.

3.2 SAMPLING AND ANALYSIS

The original Field Sampling and Quality Assurance Plan (FSQAP) is modified with the following information prepared for the PCB Removal Action. The known contaminants of concern vary between different work areas and media, but include the following:

- PCBs (Aroclor 1254, but possibly 1260 also)
  - Building 628 - Switch Yard - detritus layer, native soil, concrete pads
  - Building 693 - Lower Mechanical Room and adjacent pit - concrete floor and walls, sump, traps, pads, sediments

- dioxin (as Total Toxic Equivalent of 2, 3, 7, 8-TCDD)
  - Building 628 - Switch Yard - surface ash, detritus layer, native soil
  - Building 628 - Bus Bank Room - interior ash and debris in Main Bus cabinet

- trichlorobenzene (1, 3, 5-TCB and 1, 2, 4-TCB)
  - Building 628 - Switch Yard - native soil along fence line and concrete pads
  - (These samples are co-located with PCB samples, but at a different depth)

- dichlorobenzene (1, 2-DCB, 1, 3-DCB and 1, 4-DCB)
  - Building 628 - Switch Yard - native soil along fence line and concrete pads
  - (These samples are co-located with PCB samples, but at a different depth)

Samples will be of three distinct types: investigative, confirmation or disposal.

Investigative samples will be used to determine the presence and extent of contaminants of concern either before or during remediation work. Confirmation samples will be used to determine if the remediation work has achieved the action levels provided in Section 2.6. Disposal samples will be used to arrange for waste disposal services.

Investigative and confirmation samples will consist of both field and laboratory analyses as follows:

- Investigative Samples

Dioxin	100 % Laboratory	0 % Field Tests
TCB and DCB	100 % Laboratory	0 % Field Tests
PCB	10 % Laboratory	100 % Field Tests

- Confirmation Samples

Dioxin	100 % Laboratory	0 % Field Tests
TCB and DCB	100 % Laboratory	0 % Field Tests
PCB	50 % Laboratory	50 % Field Tests

At least one of the concrete samples from the investigative samples at Building 628 will be sent to the laboratory for analysis. In addition to the above samples, other sampling and analytical activities may be required. This could include drum and adjacent soil sampling if the drums contain residual materials or have leaked, UST sampling if other tanks are found during the geophysical study, or petroleum hydrocarbon analysis of soil samples if the Building 117 UST indicates leakage upon removal. All investigative or confirmation samples for these activities will be performed in the laboratory. Disposal analyses will also be performed by the laboratory.

3.2.1 Investigative Sample Locations

This section is provided to guide the investigative sampling and analyses for the PCB Removal Action work. In general, the procedures of Section 8 ("Field Sampling and Quality Assurance Plan") of the original Work Plan dated April 18, 1997, will be followed but will include the modifications in this addendum. Refer to the attached shop drawing (Sheets SD-03 and 04) for sample location details and notes. The goal of the investigative sampling work is to define the boundaries for remediation.

Most of the investigative work at Building 628 - Switch Yard will be for PCB delineation in the Switch Yard. The dioxin, TCB and DCB analytical results at Building 628 will need Navy and regulatory evaluation to determine if any additional sampling or remediation will be required.

During the investigative sampling at the Building 628, initial samples will be grab samples collected at the approximate center of the grids shown on SD-03. There are also several specifically located PCB samples not associated with the grid system. DCB/TCB samples will be co-located for collection at specified PCB sample locations, but will be collected in the native soil at a depth of 6 to 12 inches. The dioxin samples will be collected at some locations which are also PCB sampling locations and at some locations which are independent of PCB samples. The collection and immunoassay testing of all initial investigative PCB samples shown on SD-03 will be completed before the collection of any follow-up PCB samples is begun to define the limits of contamination.

At Building 693 - Lower Mechanical Room and adjacent pit, all of the investigative work is for PCB delineation. This will entail the collection and analysis of samples collected from concrete floors and walls, metal column and conduit piping, and sediment from various areas inside the building and the pit outside Building 693. The initial investigative samples will be collected based in a grid system, accompanied by other samples from selected locations, as shown on SD-04. The collection and testing of

all initial investigative PCB samples shown on SD-04 will be completed before the collection of any follow-up PCB samples is begun to define the limits of contamination.

3.2.1.1 Building 628 and Switch Yard

Initial investigative samples will be collected in the Switching Yard adjacent to Building 628 (Area 7 - Camp Barney: Grid D-7) at the locations shown on Sheet SD-03 along with notes regarding each sample. These locations include the following:

- Six dioxin samples (ash, detritus) at pre-established locations including four from the Switch Yard (B628-100 to B628-103), one from outside the fence towards Quarters R (B628-104), and one from inside the Main Bus cabinet within Building 628 (B628-105).
- Five TCB/DCB samples (B628-106 to B628-110) at pre-established locations in the Switch Yard (native soil). These samples are co-located with PCB samples, but are collected in the native soil at 6 to 12 inches deep.
- Six PCB samples (detritus) from pre-established locations in the Switch Yard (B628-111 to B628-114, and B628-138) and from below the former transformer platform just north of Building 628 (B628-139).
- Seven concrete samples for PCB analysis including one from the small pad (B628-115), three from the large west pad (B628-116 to B628-118), and three from the large east pad (B628-119 to B628-121). All of these samples will be collected on the pad top between the rails after all surface soil and grit has been removed by sweeping.
- Sixteen PCB samples (detritus) from the approximated centers of the grids.

No pre-established PCB samples have been specified for initial investigative sampling of the native soil underlying the stone layer of the Switch Yard. Soil samples for PCB or dioxin will be collected in the upper 4 inches of soil in the event there is insufficient detritus available for testing at a sample location. Any soil or grit present on the concrete pads will be removed prior to collection of the samples and disposed of in the >50 ppm PCB waste stream. The need for such samples will be established after reviewing the initial investigative sample results.

In the event that one or more of the initial investigative PCB soil samples exceeds the action levels noted in Section 2.6 (i.e., it is a "hot spot"), the following *general* procedure will be used to "chase" the boundaries of contamination (see SD-05 for an example). Best professional judgment will be used in the implementation of this general procedure. All of the initial grid and specifically located samples shown on SD-03 will be completed before chasing any hot spots. A careful review of this test data may result in field adjustments to the following general procedure.

- From the hot spot, collect and analyze 4 more samples taken 5 feet away to the north, south, east, and west.

- If all 4 of these samples are below the action level (i.e., it is a "clean" sample), then define the remediation area as 2.5 feet (half the distance) between the hot spot and the 4 clean samples. The depth of remediation will be determined during excavation.

- If one or more of these 4 samples is also a hot spot, then additional samples will be collected 5 feet from the new hot spot. These samples will be located: (1) in a straight line from the two most recent grid hot spots, (2) at a 45° angle to the right or above the straight line and (3) at a 45° angle to the left or below the straight line. This sample locating system will be continued until samples are found that test below the action levels. The remediation area will be defined as half the distance between the outermost hot spot and these samples below the action levels. The depth of remediation will be determined during excavation.

Each of the 28 PCB samples (concrete, soil or detritus) will be analyzed in the field using an immunoassay test kit (EnSys or equivalent). Ten percent of these samples (3 samples - one soil, one concrete, and one detritus) will be split for laboratory analysis. The three laboratory samples will be selected from "critical" locations from the point of view of residual exposure risk (i.e., where an immunoassay test had previously resulted in a "less than 10 ppm PCB" result and no remediation or further action would be forthcoming).

3.2.1.2 Building 693 - Lower Mechanical Room

Initial investigative samples will be collected for PCB analyses from sediments and concrete located in the lower mechanical room of the water treatment plant [Building 693 (Area 7 - Camp Barney: Grid D-9)]. Refer to Sheet SD-04 for sample locations and related information. These samples include the following based on a grid system and several selected sample locations:

- Concrete floor samples at 23 locations (B693-200 to B693-222). These samples will be biased to visibly stained areas.

- Nine wipe samples including: three samples from steel columns (B693-223 to B693-225), four samples from pad mounted machinery (B693-226 to B693-229), and two samples from wall mounted conduits and piping (B693-230 and B693-231).

- Concrete wall samples at 36 locations (B693-232 to B693-267) taken approximately 6 to 12 inches from the floor.

- Four sediment samples (B693-268 to B693-271) including one from the interior building floor, one from the floor of the exterior pit, and two from the sump and trench located in exterior pit.

Each of the 72 PCB samples will be analyzed in the field using an immunoassay test kit (EnSys or equivalent). Ten percent of these samples (7) will also have sufficient sample material collected for laboratory analysis. The seven laboratory samples will be selected from "critical" locations from the point of view of residual exposure risk (i.e., where an immunoassay test had previously resulted in a "less than 10 ppm PCB" result and no remediation or further action would be forthcoming).

3.2.1.3 Building 117 - Underground Storage Tank

Liquid samples of the tank's contents will be collected and analyzed for characterization and necessary disposal parameters prior to removal. Samples will be collected and analyzed for each distinct

layer of liquid in the tank. Previous information indicated that the UST contains heating oil. The sampling procedures will follow the SOP for drum and tank sampling presented in the original Work Plan for this delivery order. The MDE has provided written approval of the UST removal plan dated 17-Nov-97 in a letter from Mr. Herbert Meade to Mr. Frank Zepka.

The MDE will be given approximately 30 calendar days written notice (via MDE's "Underground Storage System Closure Thirty [30] Day Written Notification" form) prior to the tank removal and 2 days verbal further notice immediately before the tank removal once the actual date has been finalized. Notice will be provided to Mr. Gunner Roe, Oil Control Program at Maryland Department of the Environment, 2500 Broening Highway, Baltimore, Maryland, 21224 (410-631-3442 voice, -3092 fax).

3.2.2 Confirmation Sample Locations

Confirmation samples will be collected to verify that the remediation has achieved the Section 2.6 action levels for this project. This will involve a different grid and sampling frequency criteria than for the investigative sampling work. Both immunoassay field tests and laboratory analytical will be involved with the confirmation testing.

No PCB sample will be sent for laboratory analysis until the field analysis for that sample has been performed and found to be below the site action level of 10 mg/kg. If a sample is found to contain greater than 10 mg/kg PCBs, the site supervisor will be notified so additional excavation/removal may be performed.

3.2.2.1 Building 628 and Switch Yard

At the small concrete pad, 4 wall samples and 4 floor samples of soil will be collected within the excavation. One sample will be collected per wall and one floor sample will be collected on each side of the pad. All samples will be screened in the field with the immunoassay test kits and half the samples will also be analyzed for PCBs in the laboratory.

At each of the larger concrete pads (east and west), 8 wall samples and 8 floor samples of soil will be collected within the excavation. Two samples will be collected per wall and two floor samples will be collected on each side of the pad. All samples will be screened in the field with the immunoassay test kits and half the samples will also be analyzed for PCBs in the laboratory. The confirmation samples that receive laboratory analysis will include at least one concrete sample if the concrete is remediated.

At other excavations with less than or equal to 400 square feet of floor area, 1 sample will be collected per 20 linear feet of wall and 1 floor sample will be collected per 100 square feet of floor. If the walls of the excavation total less than 40 linear feet, wall samples will be collected from opposite walls and the floor will be divided into quadrants. All samples will be screened in the field with the immunoassay test kits and half the samples will also be analyzed for PCBs in the laboratory.

At other excavations with greater than 400 square feet of floor area, 1 wall sample will be collected per 40 linear feet of wall and 1 floor sample will be collected per 400 square feet of floor. However, a minimum of 4 wall samples and 4 floor samples will be collected, the floor being divided into quadrants. All samples will be screened in the field with the immunoassay test kits and half the samples will also be analyzed for PCBs in the laboratory.

3.2.2.2 Building 693

Once the contaminated concrete has been removed, confirmation samples will be collected in the same manner as the investigatory samples were. Each of the areas to be sampled will be swept prior to sample collection to ensure no cross contamination occurs from the just removed concrete. Confirmation samples will be collected from the remediated areas on the following frequency:

- Wall and vertical surfaces — 1 sample per 50 square feet
- Floor and horizontal surfaces — 1 sample per 100 square feet.

Confirmation samples will be biased towards the "hottest" pre-remediation location for investigative samples.

3.2.2.3 Building 117 - Underground Storage Tank

Once the tank has been removed, verification soil samples will be obtained from the bottom and walls of the excavation according to the State of Maryland Department of the Environment procedures for tank removal. One soil sample will be obtained from the floor of the excavation and one soil sample from each of the four sidewalls. These 5 samples will be obtained using the excavator bucket if the excavation is such that personnel are not permitted to enter the excavation.

The samples will be analyzed for Total Petroleum Hydrocarbons (TPH) in both the gasoline and diesel range. If the analytical results are above the Section 2.6 action level of 100 ppm for TPH (both gasoline and diesel range), the excavation will continue and additional samples will be collected until the results are below the action level for TPH.

3.2.3 Sample Collection

The following sections discuss the procedures to be followed in obtaining the samples discussed previously. These procedures will be supplemented with the documentation and shipping procedures discussed in Section 8.0 of the original Work Plan.

3.2.3.1 Soil, Detritus, and Sediment Samples

Soil, detritus, and sediment samples will be collected using chemically-inert, disposable sample scoops, following OHM's Surface Soil Sample Collection SOP. Briefly, sediment samples will be collected from the top inch of sediment and placed in a 250 milliliter (mL) glass sample container, complete with a Teflon®-lined lid. The container will be gently tapped as it is filled, to minimize headspace.

Detritus must first be screened from the stone using a No. 4 or 8 sieve. The material passing the sieve will be collected on clean paper, sampled with a chemically-inert, disposable sample scoop, and placed in a 250 mL glass sample container complete with a Teflon®-lined lid. The container will be gently tapped as it is filled, to minimize headspace.

Soil samples will be collected from 0 to 4 inches below grade using chemically-inert, disposable scoops and placed in a 250 milliliter (mL) glass sample container, complete with a Teflon®-lined lid. For volatile samples (e.g., TCB and DCB), the samples will be placed in a 125 mL sample container. The containers will be gently tapped as filled, to minimize headspace.

3.2.3.2 Concrete Samples

Concrete samples will be collected using a ½-inch-diameter concrete bit to drill the concrete to a depth of ½ inch. Four drill holes will be needed to generate sufficient dust for each immunoassay analysis (approximately 4 cc or 10 grams). If a sample will be sent for off-site analysis, an additional 10 grams will be collected.

The drilling dust of wall samples (or vertical surfaces) will be collected on clean paper as shown on Shop Drawing SD-04. The drilling dust of floor samples (or horizontal surfaces) will be retained inside an aluminum or plastic bowl shroud, and dust will be collected by brushing the drill dust by hand on transfer (weighing) paper for placement in the sample jar. The sampler will change sample gloves and the drill bits will be decontaminated with solvents and detergent washes for PCB removal between samples.

3.2.3.3 Dioxin Samples

Samples for dioxin analysis will be placed in 250-milliliter amber glass jars. Soil samples will be obtained from the dioxin sample locations outside the building. These samples will be obtained between the depths of 3 and 9 inches below the ground surface and will be placed in separate 250 mL amber glass jars to protect the sample from the sunlight.

3.2.3.4 Quality Assurance/Quality Control Samples

Project-specific quality assurance/quality control (QA/QC) samples which will be collected for this sampling event include duplicate samples and matrix spike/spike duplicate (MS/SD) samples as follows:

- Soil duplicate sample containers will be filled alternately with the initial sample container. Soil MS/SD samples will be obtained from the initial sample container.

- Duplicate concrete samples will require an additional 10 grams of sample, as will concrete matrix spike and matrix spike duplicate samples (20 additional grams total). All concrete QA/QC samples will be co-located, as opposed to actual splits of sample materials.

3.2.3.5 Sample Numbering

Samples numbered 01 through 76 were previously collected for the Site Clean-Up Action portion of this project, and are described in Part 1 of the Contractor Close-Out Report for this project titled "Site Clean-Up and PCB Removal Actions" dated 10-Oct-97.

For the PCB Removal Action portion of this project, samples will be numbered following the format described below:

BXXX-NNN

- BXXX - building number closest to the work (e.g., 628, 693, 117, 007, 714, 102, 103, etc.)
- NNN - denotes the consecutive sample number for each area as follows:
    - 100 series - all Building 628 samples (i.e., 100 to 199)
    - 200 series - all Building 693 samples (i.e., 200 to 299)
    - 300 series - all other samples for this work (i.e., 300 and beyond).

3.2.4 Analytical Methods

The following sections discuss the analysis to be conducted by the laboratory and in the field. The QC protocols for analysis will follow those established in the original Work Plan. The following SW-846 analytical methods will be used:

- Method 8290 Laboratory all dioxin samples
- Method 8260 Laboratory all TCB and DCB samples
- Method 8081 Laboratory PCB samples
- Method 4020 Field PCB samples by immunoassay test kits
- Method 8020 Laboratory all BTEX only samples
- Method 8015 Laboratory all TPH samples (modified GRO, DRO/LRO)

3.2.4.1 Field Analysis

Samples will be analyzed for PCB on site using immunoassay test kits. The samples are extracted following the manufacturer's instructions provided with the test kits and are then compared with the two reference standards supplied by the manufacturer. The two reference standards provide a QC check on the sample preparation and must be within the control limits of ± 0.20 instrument response on the photometer.

The reference standard is placed in the left path and the sample is then placed in the right path of the photometer. If a response is zero or negative, the sample contains equal to or greater than the standard's concentration. If the response is positive, the sample concentration is less than the standard concentration. The two reference standards that will be used for the PCB Removal Action work will be:

- 10 ppm PCB
- 50 ppm PCB

These standards will allow determination of whether a sample contains less than 10 ppm PCB, or greater than or equal to 10 ppm PCB. This allows evaluation relative to the site action levels (Section 2.6). If the sample contains greater than or equal to 10 ppm PCB, then the sample will be also run against the 50 ppm PCB standard to evaluate disposal options.

3.2.4.2 Laboratory Analysis and Turn Around Time

All samples for PCB analysis will be prepared using SW-846 Method 3550, Ultrasonic Extraction, and will be analyzed by Method 8081. The sample extract will be cleaned, if necessary, using the method(s) determined most appropriate by the laboratory.

All laboratory PCB samples will be analyzed on a 24-hour turnaround time (TAT).

All dioxin samples will be analyzed on the quickest TAT available from the laboratory, but no longer than 7 business days.

All other laboratory samples (e.g., TCB, DCB, TPH, BTEX) will be on a 7 business day TAT.

The laboratory samples for TPH, PCB, and TCB/DCB analysis will be tested by:

OHM Analytical Division
16406 US Route 224 East
Findlay, OH 45840
(419) 424-4981
Contact: Joe Hnatow

The samples for dioxin analysis will be tested by:

Triangle Laboratories, Inc.
801 Capitola Drive
Durham, NC 27713
(919) 544-5729
Contact: Mary McDonald ext. 269

3.2.5 Data Deliverables

All off-site laboratory analyses for PCB, dioxin, TCB and DCB will require independent data validation at the M2 level (reference: "Innovative Approaches for Validation of Organics Data," USEPA Region 3, June 1995). Laboratory data packages will be sufficient to permit the planned M2 data validation, and M3 data validation if so required at a later date. On-site analyses will have sample numbers, sample weights, standard preparation QC results, and analytical results tabulated and included in the analytical report.

3.3 UNDERGROUND STORAGE TANK REMOVAL

The UST previously discovered near former Building 117 will be sampled, emptied, removed, and disposed of according to the State of Maryland Department of Environment procedures. The previous work at the site involved the removal of USTs, and this new work will follow those procedures already established. To summarize, the following will be conducted:

- Remove overburden soil to expose sampling and access ports
- Obtain samples of tank contents and document liquids layering if more than one discrete layer exists
- Remove and containerize contents of UST following the procedures in OHM's Standard Operation Procedure (SOP) for UST removal
- Remove UST from the ground and purge tank with non-explosive gas
- Clean inside of tank and shear into manageable pieces for off-site salvage or disposal
- Excavate visually contaminated soils from tank excavation and stockpile soil for off-site disposal (if contamination exists)

- *Conduct verification sampling and analysis*
- Backfill excavation when analytical results are below action levels.

The containerized contents of the UST will be removed off site once the analysis is complete and arrangements are made with a disposal or recycling facility, depending on the tank's contents.

3.4 DRUM REMOVAL

There are several drums located at or near Buildings 7 and 714. These drums are believed to be empty and will only require handling and off-site disposal (possibly included with the UST scrap metal). During the handling and removal activity, the drums will be inspected to determine if material is present within any of the drums. If so, a sample of the drum's contents will be collected and analyzed for wastestream characterization. This sampling procedure will follow OHM's established SOP for drum sampling and handling.

3.5 GEOPHYSICAL STUDY

A magnetics survey will be conducted around the perimeter of Buildings 102 and 103 to determine if the fuel tanks still exist. Several USTs have been discovered in other areas, which leads to the possibility that these USTs still exist.

The survey will be conducted using a Schonstedt 52C or 72CV gradiometer. This instrument was used in previous magnetic surveys in which a UST was discovered within the former Base. The perimeter of the buildings will be scanned with this instrument out to a distance of 20 to 30 feet beyond each building wall. Any subsurface magnetic disturbance will be marked with pin flags and further scanned to estimate size, depth, and orientation. Subsurface disturbances which display the characteristics of a UST will be marked and labeled, and a figure will be made showing the possible UST locations. This information will then be submitted to the Navy for their review and further direction.

3.6 PCB-CONTAMINATED MATERIAL REMOVAL

Two areas are known to require PCB removal as previously discussed—the Building 628 Switch Yard and the Lower Mechanical Room in Building 693. The removal activities for each area are discussed below.

3.6.1 Building 628 Switch Yard

The removal of PCB impacted material will be based on the area delineation's developed from the investigative analytical work. Depth delineation will be determined during the removal work. The removal of contaminated material will be accomplished using an excavator.

Concrete that exceeds the Section 2.6 action levels will be broken into manageable pieces and direct loaded with the excavator into the transportation vehicles or a rolloff box.

Soil removal will be accomplished by first removing and stockpiling the aggregate on site (if the Navy requires the aggregate to remain on site), then removing approximately 12 inches of soil within the

20-foot by 20-foot grid. This soil will also be direct loaded for off-site disposal. Once all designated material has been excavated, confirmation sampling and analysis will be conducted in each excavated area. If results are still above the action levels, additional excavation will be performed until the confirmation analytics satisfy the action levels.

Once the confirmation sample results are below the action levels, the excavation areas will be backfilled with soil from an on-site borrow source identified by the Navy. This soil will be spread with the excavator after direct tailgating. The excavator will then track over the spread material or tamp it with the knuckled bucket to provide a compactive effort suitable for the area. The area will be seeded and mulched.

3.6.2 Building 693

The removal of PCB impacted concrete from walls, floors, or other areas will be based on the delineation developed by the investigative sampling and analytical work.

Concrete removal from horizontal surfaces will be accomplished using jack hammers or concrete saws down to a depth of 2 to 3 inches in the areas to be remediated. The concrete chips will be shoveled into wheel barrows and hauled to a dumpster positioned in an accessible area outside the building. This removal will follow the procedures outlined in the original HASP and OHM's SOP for concrete demolition.

Once the concrete floor has been removed in the designated areas, confirmation samples will be collected and analyzed. At this point, a new action level of less than or equal to 50 ppm PCB will be used at the Navy's discretion which allows encapsulation of any remaining PCB material. Additional removal will be performed until the confirmation samples indicated the action levels have been achieved. OHM will repair the damaged floor areas using pumpable concrete to approximately the original floor grade.

Concrete walls and vertical surfaces will be remediated by high pressure wash (3,000 psi) with detergent. If the contamination is deeper than the surface (1/8 th inch or more), a blasting abrasive grit will be added to the wash solution and the pressure increased to 5,000 psi or more to etch the surface. Heavily stained areas will be pre-soaked with a 30 to 50 % industrial detergent solution and pressure washed. Overspray will be controlled with polyethylene mist curtains and wash waters will be collected from polyethylene floor tarps.

Once the concrete wall or horizontal surface has been removed in the designated areas, confirmation samples will be collected and analyzed. Additional removal will be performed until the confirmation samples indicated the action levels have been achieved. OHM will repair the damaged wall areas using a hand troweled mortar patch mix to the approximate original surface.

Subfloor piping connecting floor drains and traps will be flushed with an aqueous detergent solution and grouted closed. Sediments in the flush solution will be collected in bag filters and the solution stored in a pool until disposal analytics are performed. The collected sediment will be tested for disposal purposes and periodically tested with immunoassay kits to observe the status of the flushing operation.

4.0 SITE HEALTH AND SAFETY

The field procedures discussed in this Work Plan Addendum will follow the safety procedures outlined in the original project Site-Specific Health and Safety Plan. There are, however, a few activities which are unique to this new work. These activities include concrete demolition and sampling for dioxin. Job safety analysis procedures have been included for these activities, as well as the UST removal, and are included in Appendix A. In addition, the Material Safety Data Sheet (MSDS) for dioxin has been included.

SHOP DRAWINGS: SD-02 THROUGH SD-05

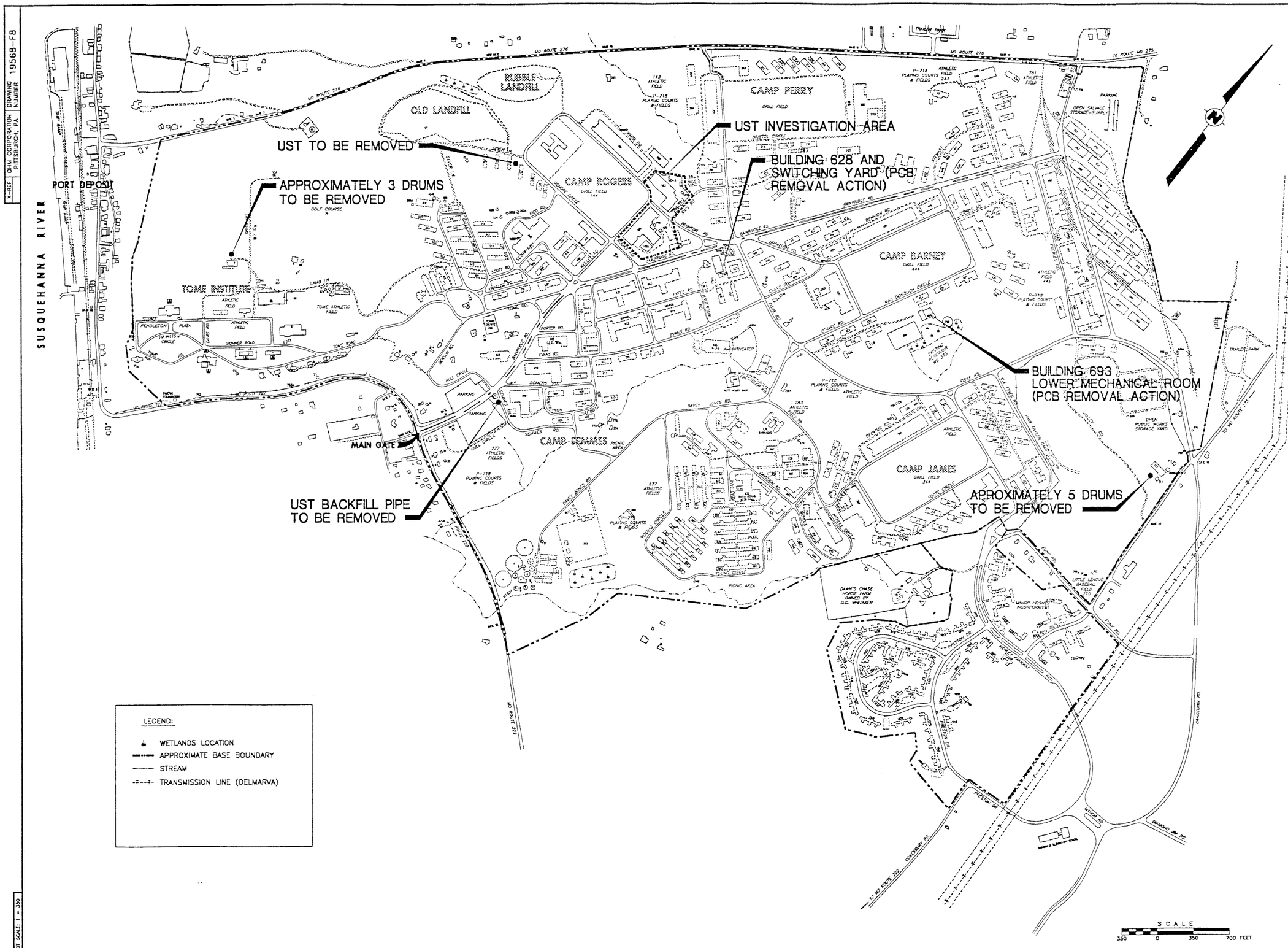

X-REF	OHM CORPORATION PITTSBURGH, PA	DRAWING NUMBER 19568-FB

PLOT SCALE: 1 = 350

REVISIONS			
NUMBER	DESCRIPTION	DATE	APPROVED BY

DOCUMENT TRACKING

VERSION	
ISSUED	
DRAWING DATE	
CONTROLLED COPY	
RECEIPT	
TRANSMITTAL DATE	

OHM Remediation Services Corp.
OHM PROJECT NO. 19568

DRAWN BY	CHECKED BY	APPROVED BY	DATE
A. Smith	D. Pringle	L. Stevens	10/26/97

FILE: 19568-FB-SD-SITE-WORK.DWG

DEPARTMENT OF THE NAVY
NAVAL STATION
NAVAL TRAINING CENTER - BAINBRIDGE

NAVAL FACILITIES ENGINEERING COMMAND
WASHINGTON, D.C.

EFA — CHESAPEAKE

PORT DEPOSIT, MARYLAND

SITE CLEAN-UP AND PCB REMOVAL ACTIONS
DELIVERY ORDER #137

PCB REMOVAL ACTION AND OTHER WORK AREA LOCATIONS

SEAL AREA

CODE IDENT. NO. 80091	SIZE: F
SCALE:	AS SHOWN
EFD NO.	
STA. PROJECT NO.	
SPEC NO.	
CONTR. CONTRACT NO.	N62470-93-D-3032
NAVFAC DRAWING NO.	

SHEET I.D.
SD-02

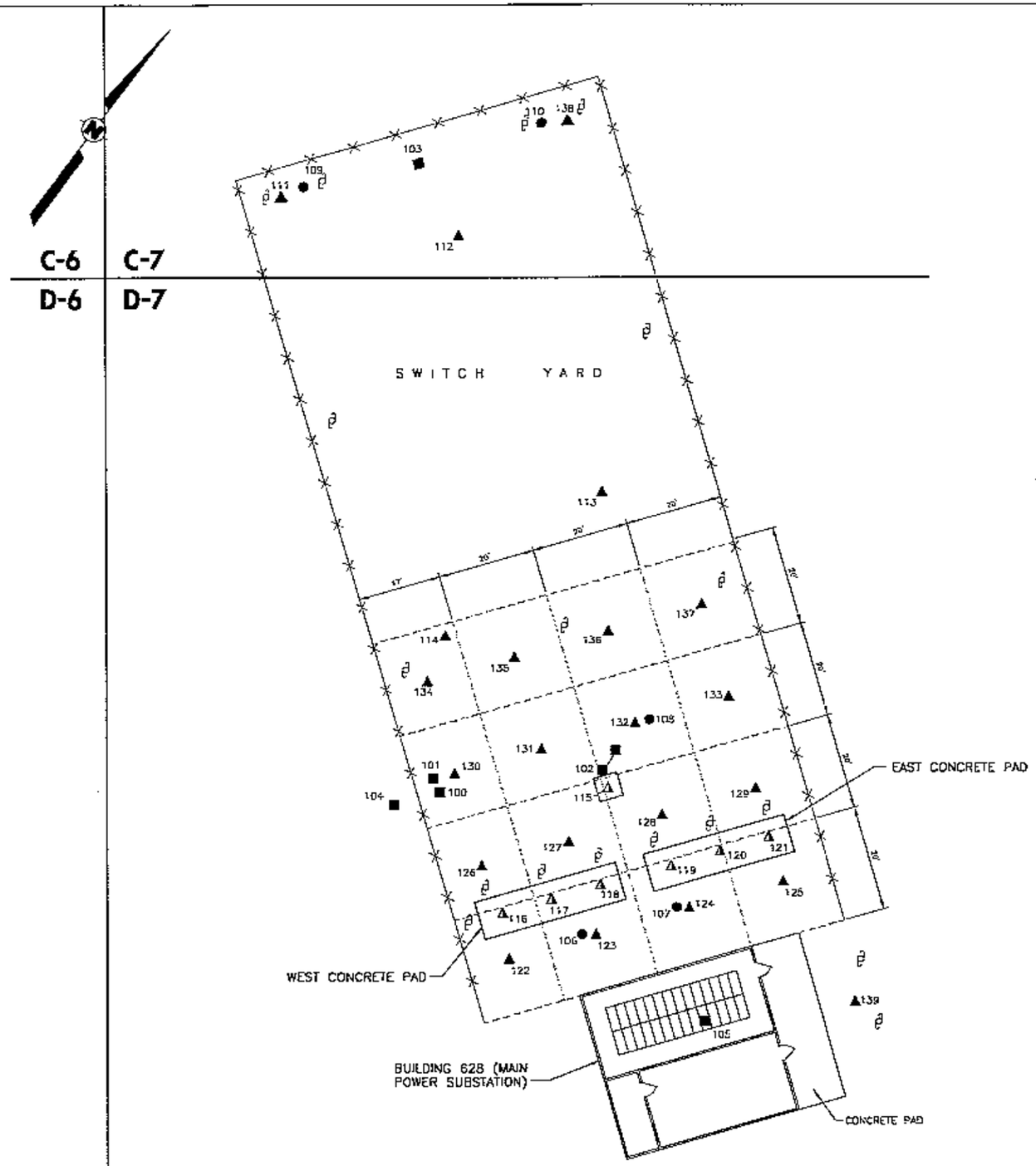

BUILDING 628 AND SWITCH YARD – INVESTIGATIVE SAMPLING LOCATIONS

SCALE

10 0 10 20 FEET

INITIAL INVESTIGATIVE SAMPLES

SAMPLE NO.	ANALYSIS	NOTES
100	DIOXIN	ASH; CO-LOCATE W/ #101
101	DIOXIN	DETRITUS OR 0" TO 4" SOIL; CO-LOCATE W/#100
102	DIOXIN	COMPOSITE – ASH AND MELTED METAL AREA
103	DIOXIN	APPROXIMATELY 5 FEET FROM FENCE
104	DIOXIN	OUTSIDE SWITCH YARD
105	DIOXIN	ASH AND DEBRIS IN "MAIN BUS" CABINET
106	TCB/DCB	CO-LOCATE W/#123; 6 TO 12 INCH NATIVE SOIL
107	TCB/DCB	CO-LOCATE W/#124; 6 TO 12 INCH NATIVE SOIL
108	TCB/DCB	CO-LOCATE W/#132; 6 TO 12 INCH NATIVE SOIL
109	TCB/DCB	6 TO 12" NATIVE SOIL; CO-LOCATE W/#111
110	TCB/DCB	6 TO 12" NATIVE SOIL; CO-LOCATE W/#138
111	PCB	DETRITUS OR 0" TO 4" SOIL
112	PCB	DETRITUS OR 0" TO 4" SOIL
113	PCB	DETRITUS OR 0" TO 4" SOIL
114	PCB	AT OIL STAIN
115	PCB	SMALL PAD – CONCRETE
116	PCB	WEST PAD – CONCRETE BETWEEN RAILS
117	PCB	WEST PAD – CONCRETE BETWEEN RAILS
118	PCB	WEST PAD – CONCRETE BETWEEN RAILS
119	PCB	EAST PAD – CONCRETE BETWEEN RAILS
120	PCB	EAST PAD – CONCRETE BETWEEN RAILS
121	PCB	EAST PAD – CONCRETE BETWEEN RAILS
122 – 138	PCB	DETRITUS OR 0" TO 4" SOIL
139	PCB	BELOW PLATFORM – 0" TO 4" SOIL

LEGEND:

- UTILITY POLE
- 118 PCB SAMPLE (DRILLED CONCRETE)
- 132 PCB SAMPLE (DETRITUS LAYER)
- 101 DIOXIN SAMPLE
- 107 TCB/DCB SAMPLE

DOCUMENT TRACKING

REVISIONS

OHM Remediation Services Corp.

DEPARTMENT OF THE NAVY
NAVAL STATION
NAVAL FACILITIES ENGINEERING COMMAND
WASHINGTON, D.C.
EFA – CHESAPEAKE
NAVAL TRAINING CENTER – HARRISON
PORT DEPOSIT, MARYLAND
SITE CLEAN-UP AND PCB REMOVAL ACTIONS
DELIVERY ORDER #137

BUILDING 628 – INVESTIGATIVE SAMPLING LOCATIONS

CONTRACT NO. N62470-93-D-3032

SHEET NO. SD-03

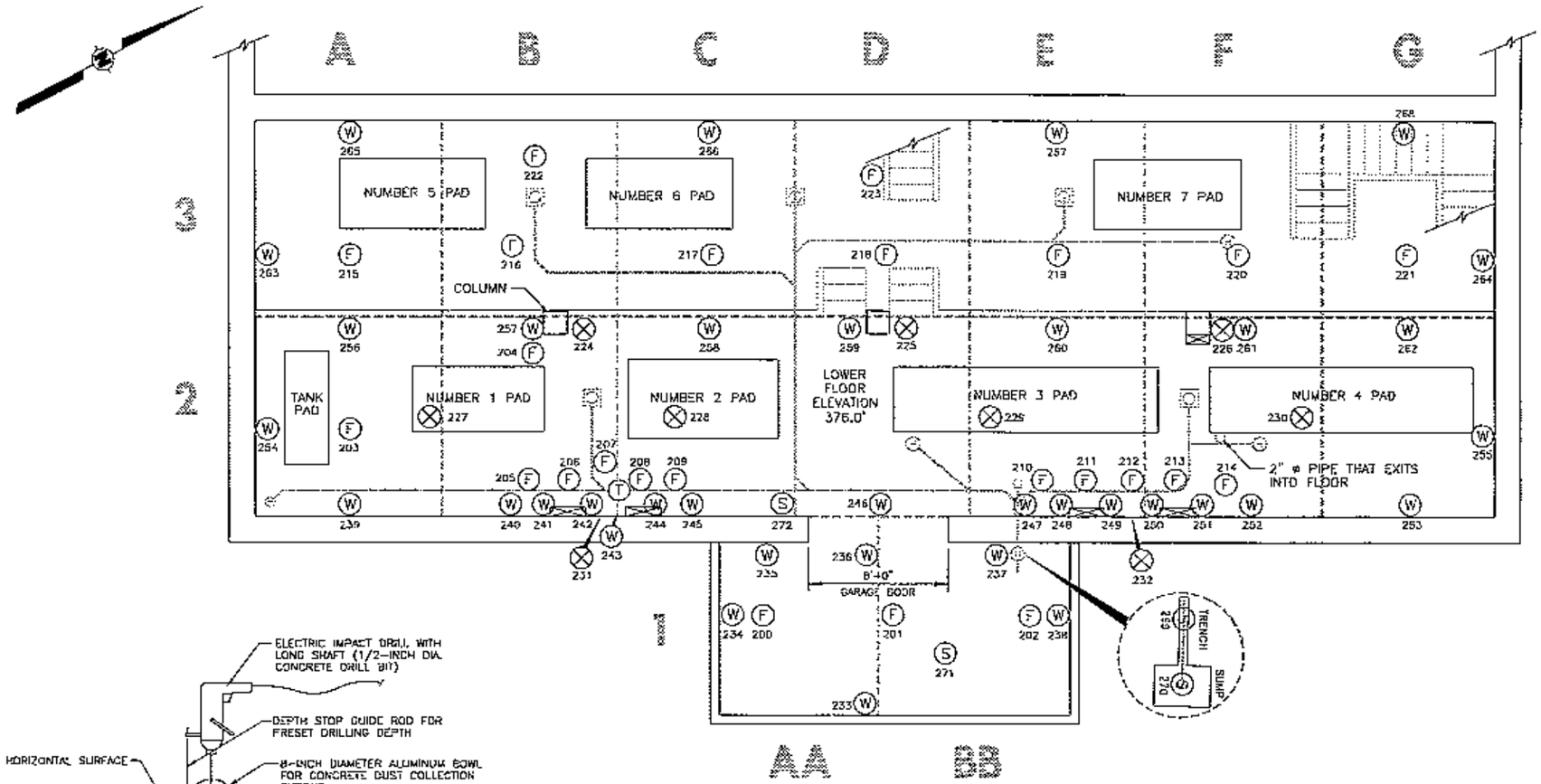

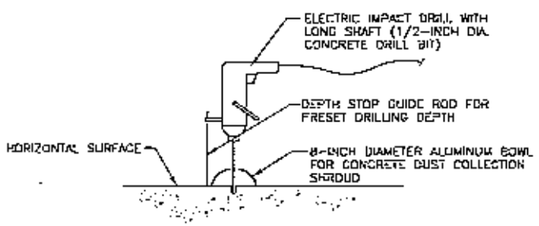

DETAIL 1
CONCRETE SAMPLE COLLECTION TECHNIQUE FOR HORIZONTAL SURFACES
N.T.S.

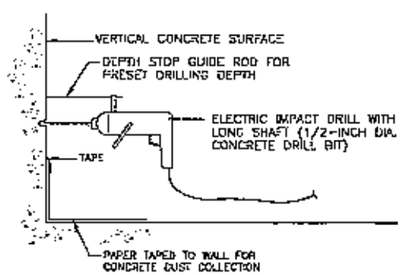

DETAIL 2
CONCRETE SAMPLE COLLECTION TECHNIQUE FOR VERTICAL SURFACES
N.T.S.

BUILDING 693 – LOWER MECHANICAL ROOM
PCB SAMPLING LOCATIONS

SCALE

LOCATION	SAMPLE NO.
FLOOR	200 TO 223
WIPE	224 TO 232
WALL	233 TO 268
SEDIMENT	269 TO 272

LEGEND:

- (W) 265 — WALL SAMPLE (CONCRETE DRILL NEAR FLOOR)
- (F) 215 — FLOOR SAMPLE (FLOOR SAMPLE (CONCRETE DRILL)
- (⊗) 231 — WIPE SAMPLE (COLUMNS AND MACHINERY)
- (S) 271 — SEDIMENT SAMPLE

DEPARTMENT OF THE NAVY
NAVAL STATION
NAVAL TRAINING CENTER – BARRACKS
NAVAL FACILITIES ENGINEERING COMMAND
EFA – CHESAPEAKE
WASHINGTON, D.C.
PORT DEPOSIT, MARYLAND
SITE CLEAN-UP AND PCB REMOVAL ACTIONS
DELIVERY ORDER #137
BUILDING 693 – PCB INVESTIGATIVE SAMPLING LOCATIONS

REVISIONS

DOCUMENT TRACKING

OHM Remediation Services Corp.
OHM PROJECT NO.19240

SHEET NO.
SD-04

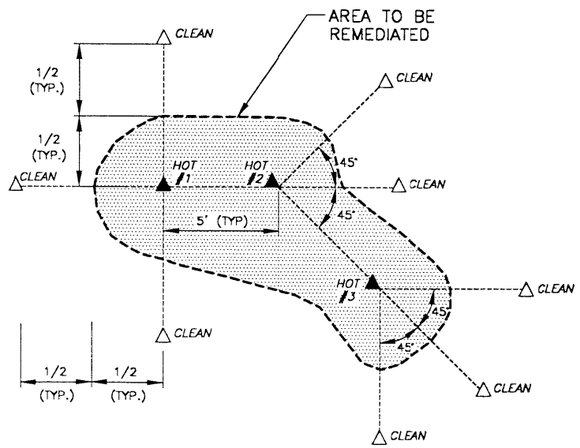

EXAMPLE – BUILDING 628 SWITCH YARD
INVESTIGATIVE SAMPLING

SCALE
0 2 5 FEET

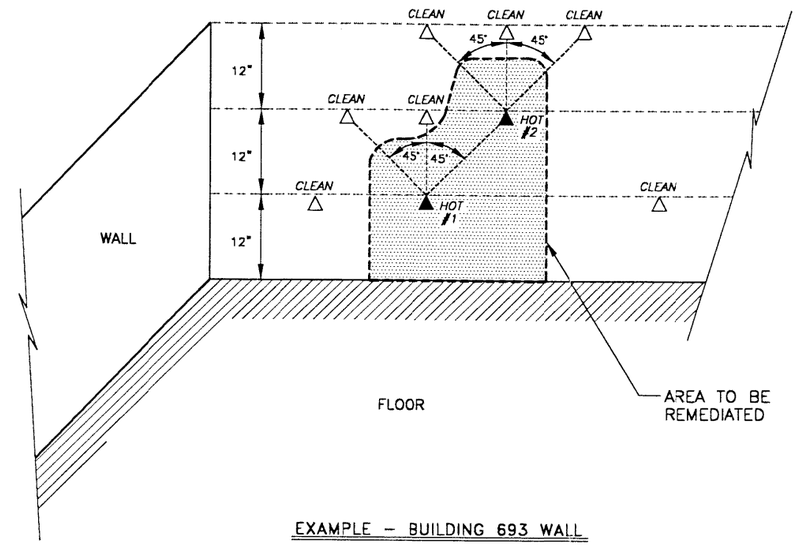

EXAMPLE – BUILDING 693 WALL
INVESTIGATIVE SAMPLING

SCALE
0 1.5 3 FEET

X-REF | OHM CORPORATION PITTSBURGH, PA | DRAWING NUMBER 19568-F10

PLOT SCALE: 1 = 1

REVISIONS

DOCUMENT TRACKING

OHM Remediation Services Corp.
OHM PROJECT NO. 19568

DEPARTMENT OF THE NAVY
NAVAL FACILITIES ENGINEERING COMMAND
NAVAL STATION EFA – CHESAPEAKE WASHINGTON, D.C.
NAVAL TRAINING CENTER – BAINBRIDGE PORT DEPOSIT, MARYLAND
SITE CLEAN-UP AND PCB REMOVAL ACTIONS
DELIVERY ORDER #137
EXAMPLE – CHASING INVESTIGATIVE SAMPLES

CODE ID. NO. 80091 SIZE: F
SCALE: AS SHOWN
EFD NO.
STA. PROJECT NO.
SPEC NO.
CONSTR. CONTRACT NO. N62470-93-D-3032
NAVFAC DRAWING NO.

SHEET I.D.
SD-05

OHM Corporation

QUALITY POLICY AND PROCEDURE APPROVAL AND REVISION RECORD

Document # QP-605	Title Documentation

APPROVAL

Name	Title	Signature	Date
Willis Moody	Super. QA/QC	Willis R. Moody	12/17/93
G. J. Herzig	Mngr. Field Tech.	G. J. Herzig	12/17/93
Terry Sole	Dir. Tech. Svcs.	Terry Sole	12/17/93

REVISION RECORD

Ltr.	Date	Change Description	Initials						
1		issue	-	-	-	-	-	-	-
2									
3									
4									
5									
6									
7									
8									
9									
10									
11									
12									
13									
14									
15									

STANDARD OPERATING PROCEDURE

Title: Documentation Procedures **Document #:** QP-605

Date Issued: October 12, 1993 **Rev:** 0 **Date:** October 12, 1993

1.0 PROCEDURE

1.1 To describe documentation procedures for sample collection, transportation and analysis.

1.2 To demonstrate step by step documentation procedures to be followed from the beginning to the end of a project.

2.0 SCOPE

2.1 This procedure provides information on the proper documentation procedures to be carried out in all sampling activities.

3.0 RELATED DOCUMENTS

3.1 OHM Corporation, Field Sampling Manual, 1993.

4.0 GENERAL INFORMATION

4.1 This SOP is a general overview and some projects may require documentation beyond what is described in section 6.0.

5.0 DEFINITIONS

None

© Copyright 1993 OHM Remediation Services Corp.

6.0 RESPONSIBILITIES

6.1 All OHM employees are responsible for filling out dispatches for equipment, vehicles, and themselves.

6.2 Sample Technicians are responsible for recording the sampler's daily notes and sample log books. They are also responsible for properly filling out sample labels, chain-of-custody forms, and any additional forms, such as drum logs and any photo documentation which may be required.

7.0 PROCEDURES

7.1 This section describes the procedures to be followed to document samples collected, transported, and analyzed. This section will demonstrate, step by step, documentation procedures to be followed from the beginning to the end of a project. This is a general overview and some projects may require documentation beyond what is described in this section. The following is a list of topics that will be covered in this section:

7.1.1 Development of a Site Sampling Plan

7.1.2 Dispatching of equipment

7.1.3 Sampler's daily notes

7.1.4 Sample labels

7.1.5 Sample log books

7.1.6 Site maps

7.1.7 Photo documentation

7.1.8 Chain-of-custody forms

7.1.9 Additional forms

7.2 Sample Plan Development

7.2.1 A sample plan is necessary for all project sites that require sampling. This includes:

© Copyright 1993 OHM Remediation Services Corp.

7.2.1.1 Emergency response situations (After 72 hours)

7.2.1.2 Long term project sites

7.2.1.3 Small scale one day sampling events

7.2.2 The sample plan is a document which describes the "how, when, why, and where" of the environmental sampling portion of a project. The sample plan is designed to give:

7.2.2.1 Detailed background information of the project site

7.2.2.2 The concerns and/or goals of the project

7.2.2.3 A step by step instruction of how samples are to be obtained, documented, and handled

7.2.3 The information provided in the sampling plan will serve as direction for the personnel obtaining the samples as well as to inform supervisory personnel of the manner in which samples will be collected. The information necessary to begin a sampling plan will be obtained from the Project Manager. This information should include the following:

7.2.3.1 Site history,

7.2.3.2 What needs to be sampled

7.2.3.3 What analyses are needed

7.2.3.4 What circumstances led to the need for sampling

7.2.3.5 What is needed to be accomplished from sampling

7.2.4 In addition, a site operational history and a review of previous study data, conclusions and recommendations (if available) are helpful in familiarizing the sampling crew with the investigations taking place on a particular project site.

7.2.5 The introduction section of a sampling plan will include the following:

7.2.5.1 Project name

© Copyright 1993 OHM Remediation Services Corp.

7.2.5.2 Project number (or proposal number)

7.2.5.3 Project location

7.2.5.4 Site history

7.2.5.5 This information should familiarize the reader with where the project is, whom the project is being completed for, who is authorizing the work (i.e. OHM may be subcontracted by ITEP for instance, but the work is being performed for or authorized by the USEPA.) and what circumstances led to the need for the project. This section should also contain an overview or summary of what the sampling plan includes.

7.2.6 Scope of Work

7.2.6.1 The scope of work should include the information gathered from the project manager on the work to be performed (what tasks are to be accomplished?). This should detail every aspect of the sampling portion of the project. In addition this should include numbers (or approximations) of each type of sample to be taken for each matrix.

7.2.7 This section should include the objectives of sampling (i.e. why are the samples being taken, what needs to be accomplished with the data generated). More specifically, the reason, or purpose, for sampling. There are many different objectives for sampling and each client has their own objectives and all sampling efforts are directed towards accomplishing those objectives. Listed below are some questions that this section should include but not be limited to:

7.2.7.1 Are samples being obtained to determine the extent of contamination?

7.2.7.2 Are samples being obtained for the purpose of generating data for disposal requirements?

7.2.7.3 Are samples being obtained for the purpose of completing treatability studies?

7.2.7.4 Are samples being obtained for a statistical evaluation of the site?

© Copyright 1993 OHM Remediation Services Corp.

7.2.8 This section should include the technical approach (i.e. How are the samples going to be obtained? In what way can the objectives be accomplished?). This section is going to address the approach of the sampling efforts. The sampling strategy necessary to fulfill the objectives will need to be addressed. Below are some types of sampling strategies commonly used:

7.2.8.1 Random Sampling

7.2.8.2 Systematic Sampling

7.2.8.3 Stratified Random Sampling

7.2.8.4 Judgment Sampling

7.2.8.5 This section will also describe whether the samples will be:

7.2.8.5.1 Grab or composite samples

7.2.8.5.2 Surface or subsurface samples

7.2.8.5.3 Upgradient or downgradient

7.2.8.5.4 Influent or effluent

7.2.8.5.5 Every aspect of the "how" and "why" to attaining the project objectives are discussed in this section.

7.2.9 Sampling Methodologies

7.2.9.1 This section should describe in great detail the step-by-step procedures of how each type of sample will be obtained (reference will be made to SOP's for specific sampling methods). This should be a chronological order of events from set up of equipment, to physically placing the samples into the jars, and changing sample gloves. In addition, the usage of each specific sampling device will be discussed. Every task that personnel are required to perform should be described fully in this section.

© Copyright 1993 OHM Remediation Services Corp.

7.2.10 The decontamination section should include all the decontamination procedures for every type of sampling which is to be performed. If only disposable sampling equipment is being utilized (i.e. tongue depressors) then this section should reflect that.

7.2.11 Quality Assurance/Quality Control (QA/QC)

7.2.11.1 This section should describe the types of the QA/QC samples to be taken (blanks, duplicates, etc.), the frequency for QA/QC sample collection, how the QA/QC samples are to be obtained and also answer questions on the matrices of QA/QC samples. For example: equipment blanks are being taken for project Z. Which of the following types of equipment blanks will be required.

7.2.11.1.1 A sample of rinsate collected from the sampling device

7.2.11.1.2 A sample of a solid material (such as play sand) taken in the same manner as the investigation samples.

7.2.12 The sample documentation section should include a description of all of the different types of required documentation to be completed on the project. This should include step-by-step instructions on how to properly complete the necessary forms. Any job specific or specialized forms that will be used should be included in this section.

7.2.13 Sample Packaging, Handling & Shipment

7.2.13.1 This section needs to give specific details on the packaging, handling, and shipment of samples. Detailed step-by-step instructions must be given on sample packaging procedures. The designated laboratory or other location where the samples will be shipped should be listed in this section, along with the point of contact, the street address, city, state, zip code and telephone number.

© Copyright 1993 OHM Remediation Services Corp.

7.2.14 Analytical

7.2.14.1 This section should include a listing of each type of analysis for each matrix and sampling task. This could range from one analysis for many types of samples and matrices to several different types of analyses for a limited number of samples. The designated laboratory (or laboratories) must be listed in this section.

7.3 Dispatching Equipment

7.3.1 The second step in preparation for the project is the dispatching of equipment. A good practice is to make a listing of equipment on a separate sheet of paper. After completing this, review it. Also, check the equipment section of any applicable SOP's. Think about the task to be completed, then think about the list you have generated. Can you complete the task with this equipment? The dispatch is the single most important piece of documentation you can have. The reason for this is simple: If you don't have the proper equipment to complete the task, then how can the task be completed properly? The following is a listing of the steps necessary to complete a dispatch properly (remember, these steps are only the "how" of completing a dispatch, it is up to you as to "what" is put on the dispatch). For an example of a completed dispatch form, please refer to Figure 7.3-1, OHM dispatch form.

7.3.2 Instructions for filling out OHM's Dispatch Form

7.3.2.1 Original or Corrective - Check box which applies. Is dispatch an original or corrective?

7.3.2.2 To Job No. /Division - Billable job or division/shop number. The job/division number shall be the project accepting the expenses.

7.3.2.3 Destination - Commonly known city and state of the OHM site/OHM division/OHM region.

7.3.2.4 Client - Common site name and/or client name if there is a difference.

7.3.2.5 Date - Month, day, and year of departure.

7.3.2.6 Time - Time of the departure in military format (i.e. 0800hrs.)

© Copyright 1993 OHM Remediation Services Corp.

7.3.2.7 Assigned Driver - Driver's signature and employee number.

7.3.2.8 Transporter - Company transporting personnel, equipment, and/or inventory. (May be OHM or other company name.)

7.3.2.9 Transferred Forms - Originating project or shop number. If transferred from a project include project number.

7.3.2.10 Transferred By - Signature and employee number of the dispatch preparer.

7.3.2.11 Accepted By - Signature, employee number, and date of the receiving party.

7.3.2.12 Data Entered By - Signature of data entry employee and employee number.

7.3.2.13 Entry Data & Time - Data and time of computer entry. (Completed by data entry personnel.)

7.3.2.14 Entry Location - City/state or Division/Region of data entry. (Completed by data entry personnel.)

7.3.2.15 Quantity & Type of Container - Total number and specific type of containers (i.e. cylinder, drum).

7.3.2.16 Hazardous Materials - Check if load contains hazardous materials.

7.3.2.17 Proper D.O.T. Shipping Name - Proper name as specified in Title 49 CFR, Section 172.101.

7.3.2.18 Hazard Class - Proper class as specified in Title 49 CFR. (172.101)

7.3.2.19 UN/NA Number - Proper UN/NA number of shipping material. (i.e. Gasoline is UN 1203)(from 49 CFR.172.101

7.3.2.20 Packing Group - Prescribed for materials in Column 5 of 49 CFR, Section 172.101 Table preceded by the letter "PG". (i.e. PG I, PG II, OR PG III)

© Copyright 1993 OHM Remediation Services Corp.

7.5.4.3.3 Make sure that the person receiving the sample signs for the "Received by" entry, or enter the name of the carrier (e.g., UPS, Federal Express) under "Received by. Receiving laboratory will sign "Received for Laboratory by" on the lower line and enter the date and time.

7.5.4.3.4 Enter the bill-of-lading or Federal Express airbill number under "Remarks or Reason for Change of Custody", if appropriate.

7.5.4.3.5 Place the original (top, signed copy) of the Chain-of-Custody Recorded Form in the appropriate sample shipping package. Retain a copy with field records.

7.5.4.3.6 Shipping containers should be secured to ensure samples have not been disturbed during transport by using nylon strapping tape and EPA custody seals. The custody seals should be placed on the containers so that they cannot be opened without breaking the seal.

7.5.4.3.7 Complete other carrier-required shipping papers. The custody record is completed using black waterproof ink. Any corrections are made by drawing a line through and initialing and dating the change, then entering the correct in formations. Erasures are not permitted.

7.5.4.3.8 Common carriers will usually not accept responsibility for handling Chain-of-Custody Record Forms; this necessitates packing the record in the sample container (enclosed with the other documentation is a plastic zip-lock bag). As long as custody forms are sealed inside the sample container and the custody seals are intact, commercial carriers are not required to sign off on the custody form.

7.5.4.3.9 The laboratory representative who accepts the incoming sample shipment signs and dates the Chain-of-Custody Record, completing the sample transfer process. It is then the laboratory's responsibility to maintain internal log books and custody records throughout sample preparation and analysis.

© Copyright 1993 OHM Remediation Services Corp.

7.5.4.4 Receipt for Samples Form

7.5.4.4.1 Whenever samples are split with a private party or government agency, a separate Receipt for Samples Record Form (see Attachment 9.6) is prepared for those samples and marked to indicate with whom the samples are being split. The person relinquishing the samples to the party of agency will require the signature of a representative of the appropriate party acknowledging receipt of the samples. If a representative is unavailable or refuses to sign, this is noted in the "Received by space. When appropriate, as in the case where the representative is unavailable, the custody record should contain a statement that the samples were delivered to the designated location at the designated time. This form must be completed and a copy given to the owner, operator, or agent-in-charge even if the offer for split samples is declined. The original is retained by the Field Operations Leader.

8.0 EQUIPMENT

* Teflon and Nylon Strapping Tape
* C.O.C
* Vermiculite or Styrofoam Packaging Materials
* Sampling Gloves
* Reclosable Plastic Bags
* Permanent Felt Tip Marker
* Pen, Black Permanent Ink
* Shipping Coolers
* Ice or Blue Ice
* Label
* Placard

© Copyright 1993 OHM Remediation Services Corp.

Project	Work Assignment Number
Sample Number	The unique sample number identifying this sample
Date	A six-digit number indicating the month, day, and year of sample collection; e.g., 02/21/93
Time	A four digit number indication the 24-hour time of collection (for example: 0954 is 9:54 a.m., and 1629 is 4:29 pm)
Medium	Water, Soil, Sediment, Sludge, Leachate, etc.
Sample Type	Grab or Composite
Preservation	Type, quantity, and concentration of preservative added
Analysis	Same as in sample plan
Sampled by	Name of the sampler
Lab #	The receiving laboratory assigns the lab # to the sample label (this number is not to be used for on-site analyses)
Remarks	If for Contract Lab analysis, include the Contract Lab case of SAS number, and Contract Lab sample number from the traffic report. Also, pertinent observations of the sampler (e.g., sequence number for sequential samples).

7.5.3.2 Blank, duplicate, or field spike samples will not be identified as such on the label as this may compromise the quality control function.

7.5.4 Chain-of-Custody Procedures

7.5.4.1 After collection, separation, identification, and preservation, the sample is maintained under chain-of-custody procedures until it is in the custody of the analytical laboratory and has been stored or disposed.

© Copyright 1993 OHM Remediation Services Corp.

7.5.4.2 Field Custody Procedures

7.5.4.2.1 Samples are collected as described in the Project Work Plan. Care must be taken to record precisely the sample location and to ensure that the sample number on the label exactly matches those numbers on the sample log sheet and the Chain-of-Custody Record (Attachment 9.5).

7.5.4.2.2 The person undertaking the actual sampling in the field is responsible for the care and custody of the samples collected until they are properly transferred or dispatched.

7.5.4.2.3 When photographs are taken of the sampling as part of the documentation procedure, the name of the photographer, date, time, site location, and site description are entered sequentially in the site logbook as photos are taken. Once developed, the photographic prints shall be serially numbered, corresponding to the logbook descriptions.

7.5.4.2.4 Sample labels will be completed for each sample, using waterproof ink unless prohibited by weather conditions, e.g., a logbook notation would explain that a pencil was used to fill out the sample label because a ballpoint pen would not function in freezing weather.

7.5.4.3 Samples are accompanied by a Chain-of-Custody Record Form (Attachment 9.5). When transferring the possession of samples, the individuals relinquishing and receiving will sign, date, and note the time on the Record. This Record documents sample custody transfer from the sampler, often through another person, to the analyst in the laboratory. The Chain-of Custody Record is filled out as follows:

7.5.4.3.1 Enter header information (project number and name, Contract Lab case No. or SAS No.). For each station number, enter date, time, composite/grab, station location, number of containers, analytical parameters, Shipment Record, and Sample Identification Tag Number

7.5.4.3.2 Sign, date, and enter the time under "Relinquished by" entry.

© Copyright 1993 OHM Remediation Services Corp.

inconvenience of transportation and disposal which are disproportionately expensive for small volumes. If such a solution is approved, materials should be properly bagged, drummed, covered, or otherwise contained at the end of each day.

7.4.1.2 Those materials which must be transported for treatment, storage, or disposal should be packaged, labeled and marked in accordance with applicable regulations.

7.4.1.3 Many wastes generated during site investigation and remediation activities will probably be adequately handled under the classification "ORM-E" (i.e., Other Regulated Materials, Type E, Sec. 6.3.12) . Types of wastes which would normally fall under this classification are contaminated disposable protective clothing and sampling equipment, spent soapy decontamination solutions and rinses, contaminated drilling cuttings or fluids and contaminated soils excavated during site investigations or remediations.

7.4.1.4 Spent solvents used for decontamination of sampling equipment (e.g., acetone or methanol) should be referenced by the actual product name. Liquids from drums or tanks should be specified as accurately as possible based on results of lab analysis or reliable records. If the liquid is known to be a solvent, organic liquid, or spent distillation bottoms, it should be referenced by its actual or generic name from the Hazardous Materials Table. In cases requiring emergency actions where the identity of a substance is not accurately know, place the substance in one of the general hazard classes in 49 CFR 173.2. The choice of class should be conservative; that is, use the highest priority class based on available information as described in Section 9.1.

7.5 Chain-of-Custody Guidelines

7.5.1 The term "chain-of-custody" refers to procedures which ensure that evidence presented in a court of law is what it is represented to be. The chain-of-custody procedures track the evidence from the time and place it is first obtained to the courtroom. These procedures also provide an auditable trail for the evidence as it is moved and/or passes from the custody of one individual to another. In addition, procedures for consistent and detailed records facilitate the admission of evidence under Rule 803(b) of the Federal Rules of Evidence (P.L. 93-575).

© Copyright 1993 OHM Remediation Services Corp.

7.5.1.1 Chain-of-custody procedures, record keeping, and documentation are an important part of the management control of samples in the HAZWRAP program. Regulatory agencies must be able to provide the chain of possession and custody of any samples that are offered for evidence, or that form the basis of analytical test results introduced as evidence. Written procedures must be available and followed whenever evidence samples are collected, transferred, stored, analyzed, or destroyed.

7.5.2 Sample Identification

7.5.2.1 The following information will be written in the sample log book when in-situ measurements or samples for laboratory analysis are collected:

- project code;
- station number;
- location of Station;
- date and time of measurement;
- samples used (if any);
- field observations (include date and time);
- level of personnel protection (if required);
- equipment used to make physical measurements and collect samples; and
- calibration data for equipment used.

7.5.2.2 Measurements and observations shall be recorded using black, waterproof ink.

7.5.3 Sample Label

7.5.3.1 Samples, other than in-situ measurements, are removed and transported from the sample location to a laboratory or other location for analysis. Before removal, however, a sample is often divided into portions, depending upon the analyses to be performed. Each portion is preserved in accordance with the Sampling Plan. Each sample container is identified by a sample label. The sampler fills out the following information on the sample label:

© Copyright 1993 OHM Remediation Services Corp.

"ORM-B, n.o.s. NA 1760"
"ORM-A, n.o.s. NA 1693"
"ORM-E, n.o.s. NA 9188"

Not otherwise specified (n.o.s.) is not used if the ORM's liquid (or solid) is identified. Then the name of the specific material is listed before the category (for example, Acetone, Flammable Liquid), followed by its appropriate UN number found in the DOT hazardous materials table (49 CFR 172.101).

7.3.12.2.2 The outside of the cooler should be labeled in the following manner:

"ORM-B, n.o.s. NA 1760"
"ORM-A, n.o.s. NA 1693"
"ORM-E, n.o.s. NA 9188"

Shippers and Laboratory, name and address.

DOT placard "MISCELLANEOUS" on outside container

"Environmental Sample"

"Inside Packages Comply With Prescribed Specifications"

"THIS SIDE UP" on top of container and upward-pointing arrows on all four sides

7.3.12.3 Shipping Papers

7.3.12.3.1 Use abbreviations only as specified. Complete carrier-provided bill of lading and sign certification statement (if carrier does not provide, use standard industry form, see Attachment 9.4). Provide the following information in the order listed. One form may be used for more than one exterior container.)

"ORM-B, n.o.s. NA 1760"
"ORM-A, n.o.s. NA 1693"
"ORM-E, n.o.s. NA 9188"

"Limited Quantity (or Ltd. Qty.).

© Copyright 1993 OHM Remediation Services Corp.

Net weight (wt) or net volume (vol), just before of after "ORM, n.o.s., of each container, if more than one is inside the outer container.

7.3.12.3.2 Include a Chain-of-Custody Record, properly executed, in container or with samples (Attachment 9.5).

7.3.12.3.3 Accompany shipping container to carrier and, if required, open outside container(s) for inspection.

7.3.12.4 Transport of ORM's hazardous substance samples do not need to be classified on exterior labels.

7.3.12.4.1 Transport ORM's hazardous substance samples as environmental samples by rented or common carrier truck, railroad, or express overnight package services. Do not transport by any passenger carrying air transport system, even if they have cargo-only aircraft. DOT regulations permit passenger airline company cargo only aircraft, but difficulties with most suggest avoiding them. Instead, ship by airline carriers that only carry cargo.

7.3.12.4.2 For transport by government-owned vehicle, including aircraft, DOT regulations do not apply. However, procedures described above, with the exception of execution of the bill of lading with certification, should still be used.

7.4 Transport of Investigation and Remediation Wastes

7.4.1 The packaging, marking, labeling, and other shipping requirements will depend on the particular waste to be transported. Examples of wastes which may be generated during the site investigations are decontamination or cleaning solutions, contaminated disposable items, test pit spoils, drilling cuttings or fluids and contaminated monitoring well discharges. Waste materials from remediation include excavation spoils, overpacked drums and discharges from drained lagoons or tanks.

7.4.1.1 In many cases, wastes generated during site investigations will be disposed of on site. These relatively small volumes of waste will be dealt with as part of the waste to be cleaned up or isolated during remediation. This avenue should be pursued, if feasible, to avoid the

© Copyright 1993 OHM Remediation Services Corp.

"Combustible, NA 1993 or "Combustible, n.o.s. NA 1993)".

Shippers and Laboratory, name and address.

DOT placard "Combustible" on outside container

No label is required for containers under 110 gallons unless it contains hazardous combustibles

"Environmental Sample"

"Inside Packages Comply With Prescribed Specifications"

"THIS SIDE UP" on top of container and upward-pointing arrows on all four sides

7.3.11.3 Shipping Papers

7.3.11.3.1 Use abbreviations only as specified. Complete carrier-provided bill of lading and sign certification statement (if carrier does not provide, use standard industry form, see Attachment 9.4). Provide the following information in the order listed. One form may be used for more than one exterior container.)

"Combustible, n.o.s. NA 1993."

"Limited Quantity (or Ltd. Qty.).

Net weight (wt) or net volume (vol), just before of after "Combustible, n.o.s., of each container, if more than one is inside the outer container.

7.3.11.3.2 Include a Chain-of-Custody Record, properly executed, in container or with samples (Attachment 9.5).

7.3.11.3.3 Accompany shipping container to carrier and, if required, open outside container(s) for inspection.

7.3.11.4 Transport combustible hazardous substance samples classified as "Combustible".

© Copyright 1993 OHM Remediation Services Corp.

7.3.11.4.1 Transport combustible hazardous substance samples classified as "Combustible" by rented or common carrier truck, railroad, or express overnight package services. Do not transport by any passenger-carrying air transport system, even if they have cargoonly aircraft. DOT regulations permit passenger airline company cargo only aircraft, but difficulties with most suggest avoiding them. Instead, ship by airline carriers that only carry cargo.

7.3.11.4.2 For transport by government-owned vehicle, including aircraft, DOT regulations do not apply. However, procedures described above, with the exception of execution of the bill of lading with certification, should still be used.

7.3.12 Packaging and Shipping of Samples Classified as ORM's

7.3.12.1 ORM's are materials not covered by any of the other categories in table 172.101. They are a catch all category. A material that falls under these other category it should be packaged as such. These are not unknowns.

7.3.12.1.1 Place sample container, properly identified and with a sealed lid, in a polyethylene bag and seal the bag.

7.3.12.1.2 Place sample in a cooler which has been lined with a large polyethylene bag.

7.3.12.1.3 Pack with enough ice, non combustible, absorbent, cushioning materials to preserve samples and minimize the possibility of the container breaking.

7.3.12.1.4 Seal large bag.

7.3.12.1.5 Securely close cooler and add security seals (Attachment 9.8).

7.3.12.2 Marking/Labeling

7.3.12.2.1 Use abbreviations only where specified. Place the following information, either hand-printed or in label form, on the outside of the container.

© Copyright 1993 OHM Remediation Services Corp.

7.3.10.3 Shipping Papers

7.3.10.3.1 Use abbreviations only as specified. Complete carrier-provided bill of lading and sign certification statement (if carrier does not provide, use standard industry form, see Attachment 9.4). Provide the following information in the order listed. One form may be used for more than one exterior container.)

"Irritant, n.o.s. NA 1693."

"Limited Quantity (or Ltd. Qty.).

Net weight (wt) or net volume (vol), just before of after "Irritant, n.o.s.,"of each container, if more than one is inside the outer container.

7.3.10.3.2 Include a Chain-of-Custody Record, properly executed, in container or with samples (Attachment 9.5).

7.3.10.3.3 Accompany shipping container to carrier and, if required, open outside container(s) for inspection.

7.3.10.4 Transport irritant hazardous substance samples classified as "Irritant".

7.3.10.4.1 Transport irritant hazardous substance samples classified as "Irritant" by rented or common carrier truck, railroad, or express overnight package services. Do not transport by any passenger-carrying air transport system, even if they have cargo-only aircraft. DOT regulations permit passenger airline company cargo only aircraft, but difficulties with most suggest avoiding them. Instead, ship by airline carriers that only carry cargo.

7.3.10.4.2 For transport by government-owned vehicle, including aircraft, DOT regulations do not apply. However, procedures described above, with the exception of execution of the bill of lading with certification, should still be used.

© Copyright 1993 OHM Remediation Services Corp.

7.3.11 Packaging and Shipping of Samples Classified as Combustible Liquids

7.3.11.1 Applying the word "Combustible" to a sample does not imply that it is in fact combustible. The word prescribes the class of packaging according to DOT regulations.

7.3.11.1.1 Place sample container, properly identified and with a sealed lid, in a polyethylene bag and seal the bag.

7.3.11.1.2 Place sample in a cooler which has been lined with a large polyethylene bag.

7.3.11.1.3 Pack with enough ice, non combustible, absorbent, cushioning materials to preserve samples and minimize the possibility of the container breaking.

7.3.11.1.4 Seal large bag.

7.3.11.1.5 Securely close cooler and add security seals (Attachment 9.8).

7.3.11.2 Marking/Labeling

7.3.11.2.1 Use abbreviations only where specified. Place the following information, either hand-printed or in label form, on the outside of the container.

"Combustible, NA 1993"or "Combustible, n.o.s. NA 1993".

Shippers and Laboratory, name and address.

Not otherwise specified (n.o.s.) is not used if the combustible liquid (or solid) is identified. Then the name of the specific material is listed before the category (for example, Acetone, Flammable Liquid), followed by its appropriate UN number found in the DOT hazardous materials table (49 CFR 172.101).

7.3.11.2.2 The outside of the cooler should be labeled in the following manner:

© Copyright 1993 OHM Remediation Services Corp.

Net weight (wt) or net volume (vol), just before of after "Poison, n.o.s.", of each container, if more than one is inside the outer container.

7.3.10.3.2 Include a Chain-of-Custody Record, properly executed, in container or with samples (Attachment 9.5).

7.3.10.3.3 Accompany shipping container to carrier and, if required, open outside container(s) for inspection.

7.3.10.4 Transport Poison B hazardous substance samples classified as "Poison".

7.3.10.4.1 Transport Poison B hazardous substance samples classified as "Poison" by rented or common carrier truck, railroad, or express overnight package services. Do not transport by any passenger-carrying air transport system, even if they have cargo only aircraft. DOT regulations permit passenger airline company cargo only aircraft, but difficulties with most suggest avoiding them. Instead, ship by airline carriers that only carry cargo.

7.3.10.4.2 For transport by government-owned vehicle, including aircraft, DOT regulations do not apply. However, procedures described above, with the exception of execution of the bill of lading with certification, should still be used.

7.3.10.1 Packaging and Shipping of Samples Classified as Irritant

7.3.10.1.1 Applying the word "Irritant" to a sample does not imply that it is in fact an irritant . The word prescribes the class of packaging according to DOT regulations.

7.3.10.1.2 Place sample container, properly identified and with a sealed lid, in a polyethylene bag and seal the bag.

7.3.10.1.3 Place sample in a cooler which has been lined with a large polyethylene bag.

© Copyright 1993 OHM Remediation Services Corp.

7.3.10.1.4 Pack with enough ice, non combustible, absorbent, cushioning materials to preserve samples and minimize the possibility of the container breaking.

7.3.10.1.5 Seal large bag.

7.3.10.1.6 Securely close cooler and add security seals (Attachment 9.8).

7.3.10.2 Marking/Labeling

7.3.10.2.1 Use abbreviations only where specified. Place the following information, either hand-printed or in label form, on the outside of the container.

"Irritant, NA 1693" or "Irritant, n.o.s. NA 1693".

Not otherwise specified (n.o.s.) is not used if the Irritant is identified. Then the name of the specific material is listed before the category (for example, Chloro-acetophene, Irritant), followed by its appropriate UN number found in the DOT hazardous materials table (49 CFR 172.101).

7.3.10.2.2 The outside of the cooler should be labeled in the following manner:

"Irritant, NA 1693"or "Irritant, n.o.s. NA 1693".

Shippers and Laboratory, name and address.

DOT placard "Irritant" on outside container

"Environmental Sample"

"Inside Packages Comply With Prescribed Specifications"

"THIS SIDE UP" on top of container and upward-pointing arrows on all four sides

© Copyright 1993 OHM Remediation Services Corp.

air transport system, even if they have cargo only aircraft. DOT regulations permit passenger airline company cargo only aircraft, but difficulties with most suggest avoiding them. Instead, ship by airline carriers that only carry cargo.

7.3.9.4.1 For transport by government-owned vehicle, including aircraft,OT regulations do not apply. However, procedures described above, with the exception of execution of the bill of lading with certification, should still be used.

7.3.10 Packaging and Shipping of Samples Classified as POISON B (Liquid and Solid)

7.3.10.1 Applying the word "Poison" to a sample does not imply that it is in fact a poison. The word prescribes the class of packaging according to DOT regulations.

7.3.10.1.1 Place sample container, properly identified and with a sealed lid, in a polyethylene bag and seal the bag.

7.3.10.1.2 Place sample in a cooler which has been lined with a large polyethylene bag.

7.3.10.1.3 Pack with enough ice, non combustible, absorbent, cushioning materials to preserve samples and minimize the possibility of the contain breaking.

7.3.10.1.4 Seal large bag.

7.3.10.1.5 Securely close cooler and add security seals (Attachment 9.8).

7.3.10.2 Marking/Labeling

7.3.10.2.1 Use abbreviations only where specified. Place the following information, either hand-printed or in label form, on the outside of the container.

Liquid- "Poison, UN 2810"or Poison, n.o.s. UN 2810"

Solid- "Poison, UN 2811"or Poison, n.o.s. UN 2811"

© Copyright 1993 OHM Remediation Services Corp.

Not otherwise specified (n.o.s.) is not used if the Poison B liquid (or solid) is identified. Then the name of the specific material is listed before the category (for example, Phenol, Poison), followed by its appropriate UN number found in the DOT hazardous materials table (49 CFR 172.101).

7.3.10.2.2 The outside of the cooler should be labeled in the following manner:

Liquid- "Poison, UN 2810 or Poison, n.o.s. UN 2810"

Solid- "Poison, UN 2811 or Poison, n.o.s. UN 2811"

Shippers and Laboratory, name and address.

DOT placard "Poison" on outside container

"Environmental Sample"

"Inside Packages Comply With Prescribed Specifications"

"THIS SIDE UP" on top of container and upward-pointing arrows on all four sides

7.3.10.3 Shipping Papers

7.3.10.3.1 Use abbreviations only as specified. Complete carrier-provided bill of lading and sign certification statement (if carrier does not provide, use standard industry form, see Attachment 9.4). Provide the following information in the order listed. One form may be used for more than one exterior container.)

Liquid - "Poison, n.o.s. UN 2810"

Solid - "Poison, n.o.s. UN 2811"

"Limited Quantity (or Ltd. Qty.)".

© Copyright 1993 OHM Remediation Services Corp.

7.3.9.1.2 Place sample in a cooler which has been lined with a large polyethylene bag.

Liquids must be packed in metal cans and labeled before being placed in outer container

7.3.9.1.3 Pack with enough ice, non combustible, absorbent, cushioning materials to preserve samples and minimize the possibility of the container breaking.

7.3.9.1.4 Seal large bag.

7.3.9.1.5 Securely close cooler and add security seals (See Attachment 9.8).

7.3.9.2 Marking/Labeling

7.3.9.2.1 Use abbreviations only where specified. Place the following information, either hand-printed or in label form, on the outside of the container.

Liquid- "CORROSIVE, UN 1760"or "CORROSIVE n.o.s. UN 1760"

Solid- "CORROSIVE, UN 1759"or "CORROSIVE n.o.s. UN 1759"

Shippers and Laboratory, name and address.

Not otherwise specified (n.o.s.) is not used if the Corrosive liquid (or solid) is identified. Then the name of the specific material is listed before the category (for example, Nitric acid, Corrosive), followed by its appropriate UN number found in the DOT hazardous materials table (49 CFR 172.101).

7.3.9.2.2 The outside of the cooler should be labeled in the following manner:

"Corrosive, UN 1759 or "Corrosive, n.o.s. UN 1759".

© Copyright 1993 OHM Remediation Services Corp.

Shippers and Laboratory, name and address.

DOT placard "CORROSIVE" on outside container

"Environmental Sample"

"Inside Packages Comply With Prescribed Specifications"

"THIS SIDE UP" on top of container and upward-pointing arrows on all four sides

7.3.9.3 *Shipping Papers*

7.3.9.3.1 Use abbreviations only as specified. Complete carrier provided bill of lading and sign certification statement (if carrier does not provide, use standard industry form, see Attachment 9.4). Provide the following information in the order listed. One form may be used for more than one exterior container.)

Liquid- "Corrosive, n.o.s. UN 1760"

Solid- "Corrosive, n.o.s. UN 1759"

"Limited Quantity (or Ltd. Qty.".

Net weight (wt) or net volume (vol). just before of after "Corrosive, n.o.s.", of each container, if more than one is inside the outer container.

7.3.9.3.2 Include a Chain-of-Custody Record, properly executed, in container or with samples (Attachment 9.5).

7.3.9.3.3 Accompany shipping container to carrier and, if required, open outside container(s) for inspection.

7.3.9.4 Transport corrosive hazardous substance samples classified as "Corrosive" by rented or common carrier truck, railroad, or express overnight package services. Do not transport by any passenger-carrying

© Copyright 1993 OHM Remediation Services Corp.

7.3.8.2 Marking/Labeling

7.3.8.2.1 Use abbreviations only where specified. Place the following information, either hand-printed or in label form, on the outside of the can.

"Oxidizer, UN 1479" or "Oxidizer, n.o.s. UN 1479".

Shippers and Laboratory, name and address.

Not otherwise specified (n.o.s.) is not used if the oxidizing liquid (or solid) is identified. Then the name of the specific material is listed before the category (for example, Acetone, Flammable Liquid), followed by its appropriate UN number found in the DOT hazardous materials table (49 CFR 172.101).

7.3.8.2.2 The outside of the cooler should be labeled in the following manner:

"Oxidizer, UN 1479" or "Oxidizer, n.o.s. UN 1479".

Shippers and Laboratory, name and address.

DOT placard "Oxidizer" on outside container

"Environmental Sample"

"Inside Packages Comply With Prescribed Specifications"

"THIS SIDE UP" on top of container and upward-pointing arrows on all four sides

7.3.8.3 Shipping Papers

7.3.8.3.1 Use abbreviations only as specified. Complete carrier-provided bill of lading and sign certification statement (if carrier does not provide, use standard industry form, see Attachment 9.4). Provide the following information in the order listed. One form may be used for more than one exterior container.)

© Copyright 1993 OHM Remediation Services Corp.

"Oxidizer, n.o.s. UN 1479".

"Limited Quantity"(or Ltd. Qty.).

Net weight (wt) or net volume (vol), just before of after "Oxidizer, n.o.s." of each container, if more than one is inside the outer container.

- Include a Chain-of-Custody Record, properly executed, in container or with samples (Attachment 9.5).

7.3.8.3.2 Accompany shipping container to carrier and, if required, open outside container(s) for inspection.

7.3.8.4 Transport oxidizing hazardous substance samples classified as "Oxidizer".

7.3.8.4.1 Transport oxidizing hazardous substance samples classified as "Oxidizer" by rented or common carrier truck, railroad, or express overnight package services. Do not transport by any passenger-carrying air transport system, even if they have cargo only aircraft. DOT regulations permit passenger airline company cargo only aircraft, but difficulties with most suggest avoiding them. Instead, ship by airline carriers that only carry cargo.

7.3.8.4.2 For transport by government-owned vehicle, including aircraft, DOT regulations do not apply. However, procedures described above, with the exception of execution of the bill of lading with certification, should still be used.

7.3.9 Packaging and Shipping of Samples Classified as CORROSIVE, (Liquid and Solid)

7.3.9.1 Applying the word "Corrosive" to a sample does not imply that it is in fact a corrosive. The word prescribes the class of packaging according to DOT regulations.

7.3.9.1.1 Place sample container, properly identified and with a sealed lid, in a polyethylene bag and seal the bag.

© Copyright 1993 OHM Remediation Services Corp.

DOT placard "Flammable Liquid" or "Flammable solid" on outside container

"Environmental Sample"

"Inside Packages Comply With Prescribed Specifications"

"THIS SIDE UP" on top of container and upward-pointing arrows on all four sides

7.3.7.4 Shipping Papers

7.3.7.4.1 Use abbreviations only where specified. Complete the carrier provided bill of lading and sign certification statement (if carrier does not provide, use standard industry form, see Attachment 9.4). Provide the following information in the order listed (one form may be used for more than one exterior container).

"Flammable Liquid, n.o.s. UN 1993" or "Flammable Solid, n.o.s. UN 1325".

"Limited Quantity" (or "Ltd. Qty.).

"Cargo Aircraft Only" .

Net weight (wt) or net volume (vol), just before or just after "Flammable Liquid n.o.s." or "Flammable Solid, n.o.s., by item, if more than one metal can is inside an exterior container.

"Environmental Samples" (if applicable).

7.3.7.4.2 Include Chain-of-Custody Record, properly executed in outside container (Attachment 9.5).

7.3.7.4.3 "Limited Quantity" of "Flammable Liquid, n.o.s." is limited to one pint per inner container. For "Flammable Solid n.o.s.", net weight of inner container plus sample should not exceed one pound; total package weight should not exceed 25 pounds.

© Copyright 1993 OHM Remediation Services Corp.

7.3.7.5 Transport Unknown hazardous substance samples classified as flammable liquids by rented or common carrier truck, railroad, or express overnight package services. Do not transport by any passenger-carrying air transport system, even if they have cargo only aircraft. DOT regulations permit passenger airline company cargo only aircraft, but difficulties with most suggest avoiding them. Instead, ship by airline carriers that only carry cargo.

7.3.7.5.1 For transport by government-owned vehicle, including aircraft, DOT regulations do not apply. However, procedures described above, with the exception of execution of the bill of lading with certification, should still be used.

7.3.8 Packaging and Shipping of Samples Classified as an OXIDIZER

7.3.8.1 Packaging: Applying the word "Oxidizer" to a sample does not imply that it is in fact an oxidizer. The word prescribes the class of packaging according to DOT regulations.

7.3.8.1.1 Place sealed container inside metal can and cushion it with enough noncombustible, absorbent material (for example vermiculite or diatomaceous earth) between the can and container to prevent breakage. Pack one container per can. Use clips, tape, or other positive means to hold can lid securely, tightly and permanently. Mark can as indicated in Paragraph 1 of section 7.3.8.2, below.

7.3.8.1.2 Place one or more metal cans into a strong outside container, such as picnic cooler or a DOT-approved fiberboard box.

7.3.8.1.3 Pack with enough ice, non combustible, absorbent, cushioning materials to preserve samples and minimize the possibility of the container breaking.

7.3.8.1.4 Seal large bag.

7.3.8.1.5 Securely close cooler and add security seals (Attachment 9.8).

© Copyright 1993 OHM Remediation Services Corp.

7.3.7.2.3 Place sealed bag inside metal can and cushion it with enough noncombustible, absorbent material (for example vermiculite or diatomaceous earth) between the bottom and sides of the can and bag to prevent breakage and absorb leakage. Pack one bag per can. Use clips, tape, or other positive means to hold can lid securely, tightly and permanently. Mark can as indicated in Paragraph 1 of section 7.3.6.2, below.

7.3.7.2.4 Place one or more metal cans (or single 1-gallon bottle) into a strong outside container, such as a metal picnic cooler or a DOT-approved fiberboard box. Surround cans with noncombustible, absorbent cushioning material for stability during transport. Mark containers as indicated in 2 of section 6.3.6.2.

7.3.7.3 Marking/Labeling

7.3.7.3.1 Use abbreviations only where specified. Place the following information, either-hand printed or in label form, on the metal can (or 1-gallon bottle):

Laboratory name and address.

"Flammable Liquid, n.o.s. UN 1993", or "Flammable Solid, n.o.s. UN 1325"

Not otherwise specified (n.o.s.) is not used if the flammable liquid (or solid) is identified. Then the name of the specific material is listed before the category (for example, Acetone, Flammable Liquid), followed by its appropriate UN number found in the DOT hazardous materials table (49 CFR 172.101).

7.3.7.3.2 The outside of the cooler should be labeled in the following manner:

"Flammable Liquid, n.o.s. UN 1993", or "Flammable Solid, n.o.s. UN 1325"

Shippers and Laboratory, name and address.

© Copyright 1993 OHM Remediation Services Corp.

7.4.6.3.3 Accompany shipping container to carrier and, if required, open outside container(s) for inspection.

7.3.6.4 Transport of nonflammable and flammable gases samples are shipped as compressed gas and classified as either "NONFLAMMABLE or "FLAMMABLE GAS".

7.3.6.4.1 Transport compressed gas hazardous substance samples classified as "NONFLAMMABLE"or"FLAMMABLE GAS" by rented or common carrier truck, railroad, or express overnight package services. Do not transport by any passenger-carrying air transport system, even if they have cargo-only aircraft. DOT regulations permit passenger airline company cargo only aircraft, but difficulties with most suggest avoiding them. Instead, ship by airline carriers that only carry cargo.

7.3.6.4.2 For transport by government-owned vehicle, including aircraft, DOT regulations do not apply. However, procedures described above, with the exception of execution of the bill of lading with certification, should still be used.

7.3.7 Packaging and Shipping of Samples Classified as FLAMMABLE LIQUID (or Solid)

7.3.7.1 Applying the word "flammable" to a sample does not imply that it is in fact flammable. The word prescribes the class of packaging according to DOT regulations.

7.3.7.2 Collect sample in the prescribed container with nonmetallic, Teflon-lined screw cap. To prevent leakage, fill container no more than 90% full. If an air space in the sample container would affect sample integrity, place that container within a second container to meet the 90% requirement.

7.3.7.2.1 Complete sample label and identification tag and attach securely to sample container.

7.3.7.2.2 Seal container and place in a 2-ml thick (or thicker) polyethylene bag, one sample per bag. Position identification tag so that it can be read through bag. Seal bag.

© Copyright 1993 OHM Remediation Services Corp.

7.3.6.2.2 The outside of the cooler should be labeled in the following manner:

"NONFLAMMABLE GAS, UN 1956"or NONFLAMMABLE GAS, n.o.s. UN 1956"

"FLAMMABLE GAS, UN 1954"or "FLAMMABLE GAS, n.o.s. UN 1954"

Shippers and Laboratory, name and address.

DOT placard "NONFLAMMABLE,"or"FLAMMABLE GAS" on outside container

"Environmental Sample"

"Inside Packages Comply With Prescribed Specifications"

"THIS SIDE UP" on top of container and upward-pointing arrows on all four sides

7.3.6.3 Shipping Papers

7.4.6.3.1 Use abbreviations only as specified. Complete carrier-provided bill of lading and sign certification statement (if carrier does not provide, use standard industry form, see Attachment 9.4). Provide the following information in the order listed. One form may be used for more than one exterior container.)

"NONFLAMMABLE GAS, n.o.s. UN 1956"or "FLAMMABLE GAS, n.o.s. UN 1954"

"Limited Quantity (or Ltd. Qty.).

Net volume (vol), just before of after "NONFLAMMABLE or"FLAMMABLE GAS, n.o.s.", of each container, if more than one is inside the outer container.

7.4.6.3.2 Include a Chain-of-Custody Record, properly executed, in container or with samples (Attachment 9.5).

© Copyright 1993 OHM Remediation Services Corp.

7.3.6.1.3 Place in a 2-ml thick (or thicker) polyethylene bag, one sample per bag. Position identification tag so that it can be read through bag. Seal bag.

7.3.6.1.4 Place sealed bag inside metal can and cushion it with enough noncombustible, absorbent material (for example vermiculite or diatomaceous earth) between the bottom and sides of the can and bag to prevent puncture. Pack one bag per can. Use clips, tape, or other positive means to hold can lid securely, tightly and permanently. Mark can as indicated in Paragraph 1 of section 7.3.6.2, below.

7.3.6.1.5 Place one or more metal cans into a strong outside container, such as a picnic cooler or a DOT-approved fiberboard box. Surround cans with noncombustible, absorbent cushioning material and ice for stability and preservation during transport.

7.3.6.1.6 Securely close cooler and add security seals (See Attachment.)

7.3.6.2 Marking/Labeling

7.3.6.2.1 Use abbreviations only where specified. Place the following information, either hand-printed or in label form, on the outside of the can.

"NONFLAMMABLE GAS, UN 1956"or "NONFLAMMABLE GAS, n.o.s. UN 1956"

"FLAMMABLE GAS, UN 1954" or FLAMMABLE GAS, n.o.s. UN 1954"

Shippers and Laboratory, name and address.

Not otherwise specified (n.o.s.) is not used if the compressed gas is identified. Then the name of the specific material is listed before the category (for example, Acetylene, Flammable Gas), followed by its appropriate UN number found in the DOT hazardous materials table (49 CFR 172.101).

© Copyright 1993 OHM Remediation Services Corp.

7.3.5.3 Shipping Papers

7.3.5.3.1 Use abbreviations only as specified. Complete carrier-provided bill of lading and sign certification statement (if carrier does not provide, use standard industry form, see Attachment 9.4). Provide the following information in the order listed. One form may be used for more than one exterior container.)

"Poisonous Liquid, n.o.s. NA1955".

"Limited Quantity (or Ltd. Qty.).

Net weight (wt) or net volume (vol), just before of after "Poisonous Liquid, n.o.s." of each cylinder, if more than one is inside the outer container.

7.3.5.3.2 Include a Chain-of-Custody Record, properly executed, in container or with cylinder (Attachment 9.5).

7.3.5.3.3 Accompany shipping container to carrier and, if required, open outside container(s) for inspection.

7.3.5.4 Transport unknown hazardous substance samples classified as Poison A only by ground transport or Government-owned aircraft. Do not use air cargo, other common-carrier aircraft or rented aircraft.

7.3.6 Packaging and Shipping of Samples Classified as a NONFLAMMABLE or FLAMMABLE GAS

7.3.6.1 Applying the word "NONFLAMMABLE or FLAMMABLE GAS" to a sample does not imply that it is in fact a nonflammable or flammable gases. The word prescribes the class of packaging according to DOT regulations.

7.3.6.1.1 Collect sample in the Tedlar bag

7.3.6.1.2 The Tedlar bag should be labeled with a tag on a string to reduce the potential for contamination from adhesives on the back of sample labels. The sample tags should include all of the information normally placed on the sample label.

© Copyright 1993 OHM Remediation Services Corp.

7.3.5.1.8 Mark and label outside container and complete shipping papers as described below.

7.3.5.2 Marking/Labeling

7.3.5.2.1 Use abbreviations only where specified. Place the following information, either hand-printed or in label form, on the side of the cylinder or on a tag wired to the cylinder valve protector.

"Poisonous Liquid, n.o.s." or "Poisonous Gas, n.o.s. NA1955".

Laboratory name and address.

Not otherwise specified (n.o.s.) is not used if the poisonous liquid (or gas) is identified. Then the name of the specific material is listed before the category (for example, Arsine, Poisonous), followed by its appropriate UN number found in the DOT hazardous materials table (49 CFR 172.101).

7.3.5.2.2 The outside of the cooler should be labeled in the following manner:

"Poisonous Liquid, n.o.s." or "Poisonous Gas, n.o.s. NA 1955".

Laboratory name and address.

DOT placard "Poisonous Gas" (even if sample is liquid) on cylinder.

"Environmental Sample"

"Inside Packages Comply With Prescribed Specifications"

"THIS SIDE UP" on top of container and upward-pointing arrows on all four sides.

© Copyright 1993 OHM Remediation Services Corp.

7.3.5 Packaging and Shipping of Samples Classified as POISON "A"

7.3.5.1 This packaging, marking, labeling, and shipping method provides a worst-case procedure for materials classed as Poison A (49 CFR 173.328). In the absence of reliable data that exclude the possibility of the presence of Poison A chemicals or compounds (see Attachment 9.2), these procedures must be followed.

7.3.5.1.1 Applying the word "poisonous" to a sample does not imply that it is, in fact, poisonous, or how poisonous. It describes the class of packaging according to DOT regulations.

7.3.5.1.2 Collect samples in a polyethylene or glass container with an outer diameter narrower than the valve hole on a DOT specification #3A1800 or #3AA1800 metal cylinder. To prevent leakage, fill container no more than 90% full. Seal sample container.

7.3.5.1.3 Complete sample label and identification tag and attach securely to sample container.

7.3.5.1.4 Attach string or flexible wire to neck of the sample container; lower it into metal cylinder partially filled with noncombustible, absorbent cushioning material (for example, diatomaceous earth or vermiculite). Place only one container in metal cylinder. Pack with enough absorbing material between the bottom and sides of the sample container and the metal cylinder to prevent breakage and absorb leakage. After the cushioning material is in place, drop the end of the string into the cylinder valve hole.

7.3.5.1.5 Replace valve, torque to 250 ft-lb (for 1-inch opening), and replace valve protector on metal cylinder, using Teflon tape.

7.3.5.1.6 Mark and label cylinder as described in Paragraph 1 of Section 7.3.4.2.

7.3.5.1.7 Place one or more cylinders in DOT-approved outside container.

© Copyright 1993 OHM Remediation Services Corp.

"Limited Quantity" (or "Ltd. Qty.).

"Cargo Aircraft Only" .

Net weight (wt) or net volume (vol), just before or just after "Radioactive n.o.s." by item, if more than one container is inside an exterior container.

"Environmental Samples" (if applicable).

7.3.4.4.2 Include Chain-of-Custody Record, properly executed and taped to inside lid of outside container (Attachment 9.5).

7.3.4.4.3 Excepted radioactive materials prepared for shipment must be certified as being acceptable for transportation by having a notice enclosed in or on the package, included with the packing list, or otherwise forwarded with the package. This notice must include the name of the consigner or consignee and the statement

"This package conforms to the conditions and limitations specified in 49 CFR 173.421 for excepted radioactive material, limited quantity, n.o.s. UN2910"

7.3.4.4.4 Accompany shipping container to carrier and, if required, open outside container(s) for inspection.

7.3.4.5 Transport Unknown hazardous substance samples classified as radioactive by rented or common carrier truck, railroad, or express overnight package services. Do not transport by any passenger-carrying air transport system, even if they have cargo-only aircraft. DOT regulations permit passenger airline company cargo only aircraft, but difficulties with most suggest avoiding them. Instead, ship by airline carriers that only carry cargo.

7.3.4.5.1 For transport by government-owned vehicle, including aircraft, DOT regulations do not apply. However, procedures described above, with the exception of execution of the bill of lading with certification, should still be used.

© Copyright 1993 OHM Remediation Services Corp.

7.3.4.2.5 Seal cooler for transport. Attachment 9.8 Sample Check List and Packing List can be used to determine if the sample is properly shipped.

7.3.4.3 Marking/Labeling

7.3.4.3.1 Use abbreviations only where specified."Radioactive, n.o.s. UN 2910" Not otherwise specified (n.o.s.) is not used if the radioactive liquid (or solid) is identified. Then the name of the specific material is listed before the category (for example, Uranium, RADIOACTIVE), followed by its appropriate UN number found in the DOT hazardous materials table (49 CFR 172.101).

The outside of the cooler should be labeled in the following manner:

"Radioactive, UN 2910" or "Radioactive, n.o.s. UN 2910"

Shippers and Laboratory, name and address.

No DOT placard is required on the outside container if it is an Excepted package

"Environmental Sample"

"Inside Packages Comply With Prescribed Specifications"

"THIS SIDE UP" on top of container and upwardpointing arrows on all four sides

7.3.4.4 Shipping Papers

7.3.4.4.1 Use abbreviations only where specified. Complete the carrier provided bill of lading and sign certification statement (if carrier does not provide, use standard industry form, see Attachment 9.4). Provide the following information in the order listed (one form may be used for more than one exterior container).

"Radioactive, n.o.s. UN 2910".

© Copyright 1993 OHM Remediation Services Corp.

7.3.4.1.4 Excepted packages are **not** subject to the provisions relating to categorization of packages, packing, labeling, marking and other shipper's responsibilities, operator's responsibilities and packaging nomenclature, marking, requirements and tests **except** for the provisions relating to marking of gross mass, documentation completion, inspection and decontamination requirements, the reporting of dangerous goods accidents, incidents and other occurrences, general packaging requirements and any other special provisions. Excepted packages of radioactive materials are packaged just like an environmental sample unless, they posses any other dangerous characteristics, then they are subject to the regulations of that other dangerous characteristic.

7.3.4.1.5 These guidelines are for "Excepted packages" of radioactive materials. If a sample is higher than Excepted values will be subcontracted out, if on site call Tech. Support Findlay 1-800-537-9540 (Bill Thomas or Jack Herzig)

7.3.4.2 Applying the word "radioactive" to a sample does not imply that it is in fact radioactive. The word prescribes the class of packaging according to DOT regulations.

7.3.4.2.1 Complete sample label and identification tag and attach securely to sample container.

7.3.4.2.2 Seal container and place in a 2-ml thick (or thicker) polyethylene bag, one sample per bag. Position identification tag so that it can be read through bag. Seal bag.

7.3.4.2.3 Place one or more sample containers into a strong outside container, such as a cooler or a DOT-approved fiberboard box. Surround cans with non-combustible, absorbent cushioning material for stability during transport.

7.3.4.2.4 A label must be placed inside the container so that upon opening it a person is made aware that there is radioactive material present. Mark containers as indicated in Paragraph 2 of section

© Copyright 1993 OHM Remediation Services Corp.

samples taken from closed drums do not have to be shipped as Poison A, which provides for a "worst case" situation. Based upon information available, a judgement must be made whether a sample from a closed container is a Poison A (Sec. 7.3.4).

7.3.3.4 If Poison A is eliminated as a shipment category, the next two classifications are "flammable" or "nonflammable" gases (Sec. 7.3.5). Since very few gas samples are collected, "flammable liquid" would be the next applicable category. With the elimination of radioactive material, Poison A, flammable gas, and nonflammable gas, the sample can be classified as flammable liquid (or solid) and shipped accordingly (Sec.7.3.6). *These procedures would also suffice for shipping any other samples classified below flammable liquids in the DOT classification table (Attachment 9.1).* For samples containing unknown material, categories listed below flammable liquids/solids in (Attachment 9.1) are generally not used because showing that these materials are not flammable liquids (or solids) requires flash point testing, which may be impractical and possibly dangerous at a site. Thus, unless the sample is known to consist of material listed as *less* hazardous than flammable liquid (or solid) in (Attachment 9.1) it is considered a flammable liquid (or solid) and shipped as such. For any hazardous material shipment, utilize the shipping checklist (Attachment 9.3) as a guideline to ensure that all sample-handling requirements are satisfied.

7.3.4 Packaging and Shipping of Samples Classified as RADIOACTIVE

7.3.4.1 Shipping of limited quantities of low level Radioactive materials as "Excepted" packages provided:

7.3.4.1.1 The radiation level at any point on the external surface of the package does not exceed 5uSv/h (0.5 mrem/h)

7.3.4.1.2 The non-fixed radioactive contamination on any external surface to the excepted package does not exceed the limits in Table 2.

7.3.4.1.3 Radioactive material whose activities do not exceed the relative exception limits may be transported as excepted packages (Table 3)(A_1 and A_2 values for most common radionuclides are found in IATA Table 7.1B)

© Copyright 1993 OHM Remediation Services Corp.

7.3.2.2.2 Look for the chemical family name. For example, pentyl alcohol is not listed, but the chemical family name is alcohol N.O.S. (not otherwise specified). If the chemical family name is not listed, then....

7.3.2.2.3 Look for a generic name based on end use. For example, Paint, n.o.s. or Fireworks, n.o.s. If a generic name based on end use is not listed, then....

7.3.2.2.4 Look for a generic family name based on end use. For example, Drugs, n.o.s. or Cosmetics, n.o.s. Finally if your material is not listed by a generic family name but you suspect or know the material is hazardous because it meets the definition of one or more hazard classes, then....

7.3.2.2.5 You will have to go to the general hazard class for a proper shipping name. For example, Flammable Liquid, n.o.s., or Oxidizer, n.o.s.

7.3.3 Unknown Substances

7.3.3.1 For samples of hazardous substances of unknown content, select the appropriate transportation category according to the DOT Hazardous Materials Classification (Attachment 9.1), a priority system of transportation categories. When shipping *unknowns* by Airborne (Federal Express) be sure to use correct markings, labeling and paperwork (Attachment 9.7).

7.3.3.2 The correct shipping classification for an unknown sample is selected through a process of elimination, utilizing (Attachment 9.1). Unless known or demonstrated otherwise (through the use of radiation survey instruments), the sample is considered radioactive and appropriate shipping regulations for "radioactive material" followed (Sec. 7.3.3).

7.3.3.3 If radioactive material is eliminated, the sample is considered to contain "Poison A" materials, the next classification on the list. DOT defines "Poison A" as extremely dangerous poisonous gases or liquids of such a nature that a very small amount of gas, or vapor of the liquid, mixed with air is dangerous to life. Most Poison A materials are gases or compressed gases and would not be found in drum-type containers. Liquid Poison A would be found only in closed containers; however, all

© Copyright 1993 OHM Remediation Services Corp.

7.2.2.1.3 "Inside Packages Comply With Prescribed Specifications"

7.2.2.1.4 "THIS SIDE UP" on top of container and upward-pointing arrows on all four sides

7.2.3 Shipping Papers

7.2.3.1 No DOT shipping papers are required. However, the appropriate chain-of-custody forms must be included with the shipment.

7.2.4 There are no DOT restrictions on mode of transportation.

7.3 Determination of Shipping Classification for Hazardous Material Samples

7.3.1 Samples determined to be environmental samples will be shipped as such but, samples known or expected to contain hazardous materials, must be considered hazardous material samples and transported according to the requirements listed below.

7.3.2 Known Substances

7.3.2.1 If the substance in the sample is "known" it can be identified, packaged, labeled, and shipped according to the specific instructions for that material (if it is listed) in the DOT Hazardous Materials Table, 49 CFR 172.101.

7.3.2.2 Unz and Company have published the following steps to help in locating a proper shipping name from the Hazardous Materials Table, 48 CFR 172.101.

7.3.2.2.1 Look first for the chemical or technical name of the material, for example, ethyl alcohol. Note that many chemicals have more than one technical name; for example, perchloroethylene (not listed in 172.101) is also called tetrachloroethylene (listed in 172.101). It may be useful to consult a chemist for all possible technical names a material can have.

© Copyright 1993 OHM Remediation Services Corp.

7.1.1.1.1 Determine appropriate procedures for transportation of samples. If there is any doubt, a sample should be considered hazardous and shipped accordingly.

7.1.1.1.2 Protect the health and safety of laboratory personnel receiving the samples. Special precautions are used at laboratories when samples other than environmental samples are received.

7.2 Packaging and Shipping of Environmental Samples

7.2.1 Environmental samples may be packaged following the procedures outlined in Section 7.3.6 for samples classified as "flammable liquids" or "flammable solids. Requirements for marking, labeling, and shipping papers do not apply.

7.2.1.1 Environmental samples may also be packaged without being placed inside metal cans as required for flammable liquids or solids:

7.2.1.1.1 Place sample container, properly identified and with a sealed lid, in a polyethylene bag and seal the bag.

7.2.1.1.2 Place sample in cooler which has been lined with a large polyethylene bag.

7.2.1.1.3 Pack with enough ice, non combustible, absorbent, cushioning materials to preserve samples and minimize the possibility of the container breaking.

7.2.1.1.4 Seal large bag.

7.2.1.1.5 Seal or close outside container.

7.2.2 Marking/Labeling

7.2.2.1 Sample containers must have a completed sample identification label on outside container and must be marked in the following manner:

7.2.2.1.1 ORM-E NA 9188

7.2.2.1.2 No DOT placard is required

© Copyright 1993 OHM Remediation Services Corp.

spill of that amount or more of the substance occurs during transit or storage, a report must be filed with DOT according to 171.15-17 concerning hazardous materials incidents reports. If the material spilled is a hazardous waste, a report must always be filed, regardless of the amount, and must include a copy of the manifest. If the RQ notation appears, it must be shown either immediately before or after the proper shipping name on the shipping paper (or manifest). Most shipping papers and manifests will have a column designated "HM" which my be used for this purpose.

5.13 Sample - A sample is physical evidence collected from a facility or the environment, which is representative of conditions at the point and time that it was collected.

6.0 RESPONSIBILITIES

6.1 Field Operations Leader - Responsible for defining whether samples planned for collection are environmental or hazardous. Responsible for determining that samples are properly packaged and shipped, and for determining that the chain-of-custody procedures are implemented from the time the samples are collected to their release to the shippers.

6.2 Field Samplers - Responsible for implementing the packaging and shipping requirements and for initiating the chain-of-custody records until they are relinquished to another custodian, to the shipper, or to the carrier.

7.0 PROCEDURE

7.1 Proper packaging and shipping procedures are followed in order to insure that all samples received are undamaged and free from cross contamination.

7.1.1 Sample Type Determination

7.1.1.1 Samples collected for shipment from a site should be classified as either environmental or hazardous material (or waste) samples. In general, environmental samples are collected off-site (for example, from streams, ponds, or wells) and are not expected to be grossly contaminated with high levels of hazardous materials. On-site samples (for example, soil, water, and materials from drums or bulk storage tanks, obviously contaminated ponds, lagoons, pools, and leachates from hazardous waste sites) are considered hazardous. A distinction must be made between the two types of samples in order to:

© Copyright 1993 OHM Remediation Services Corp.

5.4 Environmental Sample - low concentration sample typically collected off site and not requiring DOT hazardous waste labelling as a high hazard sample.

5.5 Hazardous Waste Sample - medium to high concentration sample (e.g., source material sludge, leach ate) requiring DOT placarding and Contract Lab handling as a high hazard sample.

5.6 Hazardous Material - A substance or material in a quantity and form which may pose an unreasonable risk to health and safety or property when transported in commerce ("commerce" here to include any traffic or transportation). Defined and regulated by DOT (49 CFR 173.2) and listed in (Attachment 9.1).

5.7 Hazardous Waste - Any substance listed in 40 CFR Subpart D (261.30 et seq) or 40 CFR otherwise characterized as ignitable, corrosive, reactive, or EP toxic as specified under Subpart C (261.20 et seq) that would be subject to manifest requirements specified in 40 CFR 262. Defined and regulated by EPA.

5.8 Marking - Applying the descriptive name, instructions, cautions, weight, or specification marks or combination thereof required to be placed outside containers of hazardous materials.

n.o.i. - Not otherwise indicated.
n.o.s. - Not otherwise specified.
ORM - Other regulated material.

5.9 Packaging - The assembly of one or more containers and any other components necessary to assure compliance with the minimum packaging requirements of 49 CFR 172, including Containers (other than freight containers or over packs), portable tanks, cargo tanks, tank cars, and multi-unit tank car tanks.

5.10 Placard - Color-coded, pictorial sign depicting the hazard class symbol and name to be placed on all four sides of a vehicle transporting certain hazardous materials.

5.11 Radioactive - materials which spontaneously and continuously emit ionizing radiation which can be harmful to the health of humans and animals having a specific activity greater than 70k Bq/kg (0.002 uCi/g)

5.12 Reportable Quantity (RQ) - A parenthetical note of the form "(RQ-1000/454)" following an entry in the DOT Hazardous materials table (49 CFR 172.101). Indicates the reportable quantity of the substance in pounds and kilograms. If a

© Copyright 1993 OHM Remediation Services Corp.

3.2 HAZWRAP, July 1988. Requirements for Quality Assurance of Analytical Data, DOE/HWP-65, Rev. 0, July 1988.

3.3 U.S. Department of Transportation, 1983. Hazardous Materials Regulations, 49 CFR 171-177.

3.4 United States Environmental Protection Agency, 1984. User's Guide to the Contract Laboratory Program, Office of Emergency and Remedial Response, Washington, D.C.

3.5 DANGEROUS GOODS REGULATIONS 34 Edition, Effective 1 Jan. 93, International Air Transport Association (IATA)

4.0 GENERAL INFORMATION

None

5.0 DEFINITIONS

5.1 Carrier - A person or firm engaged in the transportation of passengers or property.

5.2 Chain-of-Custody Record Form - A Chain-of-Custody Record Form is a printed form that accompanies a sample or group of samples as custody of the sample(s) is transferred from one custodian to the subsequent custodian. Attachment 9.5 shows a typical Chain-of-Custody Record. The Chain-of-Custody Record Form is a controlled document. One copy of the form must be retained in the project file.

5.3 Custodian - The person responsible for the custody of samples at a particular time, until custody is transferred to another person (and so documented), who then becomes custodian. A sample is under your custody if:

5.3.1 You possess the sample.

5.3.2 It is in your view, after being in your physical possession.

5.3.3 It was in your physical possession and then you locked it up to prevent tampering.

5.3.4 You have designated and identified a secure area to store the sample.

© Copyright 1993 OHM Remediation Services Corp.

STANDARD OPERATING PROCEDURE

Title: Sample Packaging and Shipping **Document #:** QP-606

Date Issued: August 20, 1993 **Rev:** 0 **Date:** August 20, 1993

1.0 PURPOSE

1.1 The purpose of this procedure is to define the requirements necessary for sample packaging and information on chain-of-custody records used in sample transfer.

2.0 SCOPE

2.1 This procedure applies to the packaging, shipping and documentation of samples being transferred from the field to the laboratory for analysis. Specifically, this document outlines shipping and sample documentation procedures that are in accord with the U.S. Department of Transportation (DOT) and Hazardous Waste Remedial Actions Program (HAZRAP). This procedure is applicable to all samples taken from uncontrolled hazardous substance sites for analysis at laboratories away from the site; however, this procedure does not take precedence over region-specific or site-specific requirements for chain-of-custody.

2.2 If you are not absolutely positive if a sample is shipped correctly or if can be shipped by a particular mode, call Tech. Services, Findlay or the shipper beforehand.

3.0 RELATED DOCUMENTS

3.1 HAZWRAP, July 1990. Quality Control Requirements for Field Methods DOE/HWP69/R1.

© Copyright 1993 OHM Remediation Services Corp.

OHM Corporation

QUALITY POLICY AND PROCEDURE APPROVAL AND REVISION RECORD

Document # QP-606	Title Sample Packaging and Shipping

APPROVAL

Name	Title	Signature	Date
Willis Moody	Super. QA/QC	Willis R. Moody	8/20/93
G. J. Herzig	Mngr. Field Tech.	G. J. Herzig	8/20/93
Terry Sole	Dir. Tech. Svcs.	Terry Sole	8/20/93

REVISION RECORD

Ltr.	Date	Change Description	Initials						
1		issue	-	-	-	-	-	-	-
2									
3									
4									
5									
6									
7									
8									
9									
10									
11									
12									
13									
14									
15									

7.12 A Job Summary (or Project Summary) is a brief outline of the entire project. This outline should be limited to a few paragraphs and include information such as total number of samples obtained, total number of days on site, and total costs.

7.13 OHM uses several different types of forms for several different types of projects. On the following pages are copies of the most commonly used forms. However, there may be specialized forms generated for specific project sites, which are not included among these.

8.0 EQUIPMENT

8.1 Contractor's Sampling and Analysis Plan (CSAP)

8.2 Sampler's Log Book

8.3 Sample Labels

8.4 Site Maps associated with the project

8.5 Camera

8.6 Chain-of-Custody forms

8.7 Any additional forms related to the project (i.e. Drum Logs, Well Logs, etc.)

8.8 Black ink pen

9.0 ATTACHMENTS

None

© Copyright 1993 OHM Remediation Services Corp.

FIGURE 7.10-2 Sample Shipment Checklist

OHM Corporation

GUIDANCE FOR SAMPLE PACKAGING,

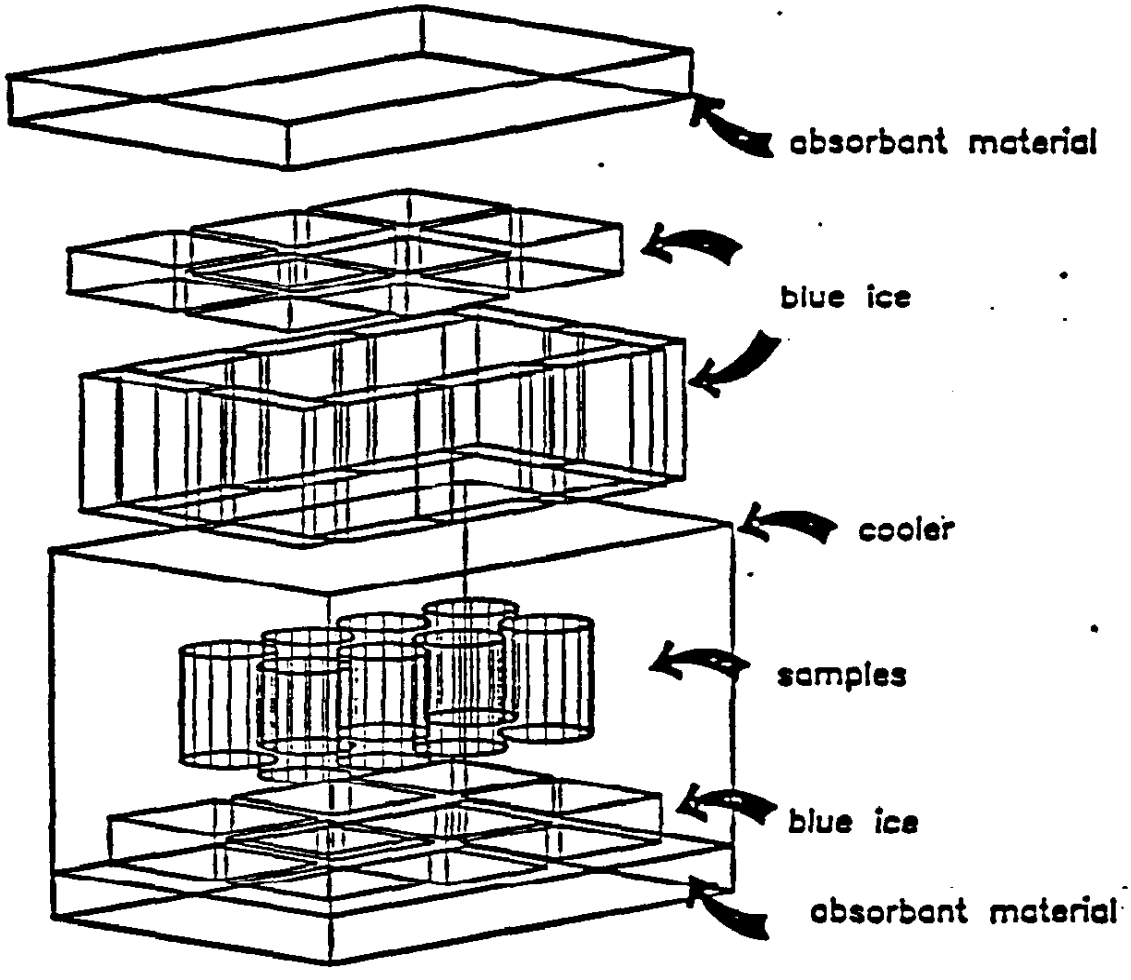

INSTRUCTIONS

Line the bottom of the cooler with absorbant material such as Sorbant Pads.
Place enough blue ice packs on the absorbant material to cover the bottom
Line all four side of the cooler with blue ice.
Place no more than eight 1—liter samples in the center of the blue ice.
Place sorbant material around the samples to avoid breakage.
Place enough blue ice packs to cover the top of the samples.
Fill the head space of the cooler with absorbant material.
Complete the OHM SHIPMENT CHECK LIST FORM *prior to sealing cooler.*
ICE MAY TO SUBSTITUTED FOR THE BLUE ICE BUT PRECAUTIONS MUST BE TAKEN TO ASSURE THAT THE SAMPLE LABELS REMAIN INTACT AND LEGIBLE.

FIGURE 7.10-2

OHM Corporation

SHIPMENT CHECK LIST

PROJECT NAME Allen Rubber Corp

PROJECT No.: 11111

TREET ADDRESS 1331 Kosar Rd

DATE: 7/05/92 TIME: 1147

/STATE/ZIP Cleveland, OHIO 29810

PHONE NUMBER (30) 333-0019

FAX NUMBER: (N/A

SAMPLE CHECK LIST

	YES	NO	COMMENTS
SAMPLE LIDS ARE TIGHT AND CUSTODY SEALS IN PLACE?	☒	☐	
ARE ALL SAMPLE NUMBERS, DATES, TIMES AND OTHER LABEL INFORMATION LEGIBLE AND COMPLETE?	☒	☐	
HAS ALL SAMPLE NUMBERS, DATES, TIMES AND OTHER SAMPLING DATA BEEN LOGGED INTO THE SAMPLE LOG BOOK?	☒	☐	
DO SAMPLE NUMBERS AND SAMPLE DESCRIPTION ON THE LABELS MATCH WITH THOSE ON THE COC?	☒	☐	
HAVE THE SAMPLES BEEN PROPERLY PRESERVED?	☒	☐	
HAVE THE CHAIN OF CUSTODIES BEEN FILLED OUT COMPLETELY AND CORRECTLY?	☒	☐	
DOES THE ANALYTICAL SPECIFIED ON THE COC MATCH THE ANALYTICAL SPECIFIED IN THE SCOPE OF WORK?	☒	☐	
HAVE THE COC'S BEEN PROPERLY SIGNED IN THE TRANSFER SECTION?	☒	☐	

PACKAGING CHECK LIST

	YES	NO	COMMENTS
EACH SAMPLE BEEN PLACED INTO AN INDIVIDUAL TIC BAG?	☒	☐	
HAS THE DRAIN PLUG OF THE COOLER BEEN TAPED CLOSED WITH WATER PROOF TAPE FROM THE INSIDE?	☒	☐	
HAS THE BOTTOM OF THE COOLER BEEN LINED WITH AT LEAST THREE INCHES OF CUSHIONING ABSORBANT PADS?	☒	☐	
HAVE ALL SAMPLES BEEN PLACED INTO THE COOLER IN AN UPRIGHT POSITION?	☒	☐	
IS THERE ADEQUATE SPACING OF SAMPLES SO THAT THEY WILL NOT TOUCH DURING SHIPMENT?	☒	☐	
HAVE AN ADEQUATE NUMBER OF BLUE ICE PACKS BEEN PLACED AROUND AND ON TOP OF THE SAMPLES?	☒	☐	
HAS FRESH BLUE ICE BEEN ADDED TO THE COOLER THE DAY OF SHIPMENT?	☒	☐	
HAS THE COOLER BEEN FILLED WITH ADDITIONAL CUSHIONING MATERIAL?	☒	☐	
HAS THE COC BEEN PLACED IN A ZIPLOCK BAG AND TAPED TO THE INSIDE OF THE LID OF THE COOLER?	☒	☐	
HAVE CUSTODY SEALS BEEN PLACED ONTO THE LID?	☒	☐	
HAS THE COOLER BEEN LABLED "THIS SIDE UP"?	☒	☐	
HAS THE COOLER BEEN LABELED WITH THE DOT PROPER SHIPPING NAME, UN/NA NUMBER AND PLACARD?	☒	☐	Low Level Contaminated Soil
HAS THE LABORATORY PERFORMING THE ANALYSES BEEN NOTIFIED OF THE SHIPMENT OF SAMPLES?	☒	☐	

PROBLEMS/RESOLUTIONS:

PREPARED BY: John Tausch

SIGNATURE: John M. Tausch

7.10.4.2.21 Remarks

Enter general instruction or requests, such as, send additional report to: _____

7.10.4.2.22 Sampler's Signature

The signature of the individual performing, or having immediate oversight of the sampling should appear in this section.

7.10.5 The sample shipment checklist is primarily used as a double check of the contents of the shipping container vs. the Chain-Of-Custody form(s). In addition, it is also useful as a double check for the packaging procedures (i.e. "Did I remember to put fresh ice in the cooler?"). The sample shipment checklist is completed for each shipping container. Refer to Figure 7.10-2 for a copy of the Sample Shipment Checklist. Always remember to contact the laboratory prior to shipment of samples.

7.11 The final report is a document that is developed upon the completion of work on a project site. The final report details specific occurrences of the project from beginning to the end. This document is similar in structure to the sampling plan. However, instead of telling a story of how the project will be completed, the final report tells a story of how the project was actually completed. The final report details any deviations from the original scope of work and why those deviations occurred. This also includes any problems or complications that may have arisen on site, what was done to correct those problems, and why.

7.11.1 The standard format to follow in completion of the final report is the same format used for generation of the sampling plan (section 7.1 Sample Plan Development). However, some sections need to be added due to changes in the scope of work. These changes will be site specific and should be approached on a case by case basis. Also refer to Section 7.11, Forms, for an example of a fill-in-the-blank type of form for weekly reports.

© Copyright 1993 OHM Remediation Services Corp.

7.10.4.2.15 Remarks

Enter sample specific instructions, cautions, or priorities (i.e., do cyanide test first on this sample or caution may contain hydrofluoric acid); also indicate preservation of sample (i.e., sulfuric acid added). Enter a sample specific comment (i.e., sample lost in shipping).

7.10.4.2.16 Item Number

Each sample number is considered a separate item. Use sequential number (1,2,3...). Item numbers begin with No. 1 on each form. Do not carry item numbers from one form to another. List items 1,2,3... that you accepted.

7.10.4.2.17 Transfers Relinquished By

Name of person and affiliation transferring or surrendering the sample to another person, (do not use only the name of the organization).

7.10.4.2.18 Transfers/Accepted By

Person signing this part is responsible for the sample(s). In addition to the person's name, he should include his company name or agency(s) initial. Person accepting sample(s) is also responsible for making sure that all samples are accounted for when he signs an acceptance. If a common carrier is used, include the carrier name and bill-of-lading number.

7.10.4.2.19 Date

Date on which sample is released to next person.

7.10.4.2.20 Time

Time at which sample is released to next person.

© Copyright 1993 OHM Remediation Services Corp.

7.10.4.2.8 Sample Number

Number assigned (project number-sequential number) in the field during collection of samples. Continue numbering in sequence from last sample obtained; refer to project field sample log.

7.10.4.2.9 Date

Date on which sample is collected.

7.10.4.2.10 Time

Time at which sample is collected (24-hour time).

7.10.4.2.11 Composite/Grab

Check mark (/) in the appropriate column to indicate whether the sample is a composite or grab.

7.10.4.2.12 Sample Description (Include Matrix and Point of Sample)

Indicate whether it is soil, liquid, air, oil, etc., along with any useful description, such as appearance (color, density, odor, etc.) Includes the location, designation, such as monitoring well number, soil sample coordinates, or EPA description number. This information must be the same as the sample label information.

7.10.4.2.13 Number of Containers

Number, size (capacity), and types of containers that are sealed and labeled for transfer to another location.

7.10.4.2.14 Analysis Desired (Indicate Separate Containers)

The name of the test (i.e., PCBs) or series of tests (VOAs) is to be entered on the diagonal lines. For each sample container designated in the number of containers, a check mark (/) should appear in the column for the desired analysis.

© Copyright 1993 OHM Remediation Services Corp.

7.10.4.2.1 Project Name

Name assigned by OHM (generally the clients company's name or the facility at which the work is being performed).

7.10.4.2.2 Project Location

City and state in which the project is located. Use street address if possible.

7.10.4.2.3 Project Number

Number assigned by OHM.

7.10.4.2.4 Project Contact

Usually an OHM employee who is responsible for over-seeing the sampling operation. This person should be the individual to whom questions are to be directed or verbal results given (i.e., senior sampling technician or project chemist).

7.10.4.2.5 Project Telephone Number

Telephone number of OHM on-site office trailer or number where person responsible for samples (project contact) can be contacted. On a short term project, write none or put in the project manager's number.

7.10.4.2.6 Client Representative

The individual employed by our client to oversee and coordinate work performed by OHM on-site (i.e., contract coordinator, OSC).

7.10.4.2.7 Project Manager/Supervisor

The name of the OHM designated project manager should be entered here. If the project does not have a project manager, such as an ERCS job, then the name of the site supervisor or response manager should be entered.

© Copyright 1993 OHM Remediation Services Corp.

OHM Corporation

CHAIN-OF-CUSTODY RECORD

FIGURE 7.10-1

Form 0019
Field Technical Services
Rev. 08/89

№ 125567

O.H. MATERIALS CORP. • P.O. BOX 551 • FINDLAY, OH 45839-0551 • 419-423-3526

PROJECT NAME		PROJECT LOCATION
PROJ. NO.	PROJECT CONTACT	PROJECT TELEPHONE NO.
CLIENT'S REPRESENTATIVE		PROJECT MANAGER/SUPERVISOR

ITEM NO.	SAMPLE NUMBER	DATE	TIME	COMP	GRAB	SAMPLE DESCRIPTION (INCLUDE MATRIX AND POINT OF SAMPLE)	NUMBER OF CONTAINERS	ANALYSIS DESIRED (INDICATE SEPARATE CONTAINERS)								REMARKS
1																
2																
3																
4																
5																
6																
7																
8																
9																
10																

TRANSFER NUMBER	ITEM NUMBER	TRANSFERS RELINQUISHED BY	TRANSFERS ACCEPTED BY	DATE	TIME	REMARKS
1						
2						
3						
4						SAMPLER'S SIGNATURE

LAB COPY

7.10.3 Transfer of Custody and Shipment

7.10.3.1 Samples are accompanied by a chain-of-custody record. When transferring the possession of samples, the individual relinquishing and receiving will sign, date, and note the time on the record. This record documents transfer of custody of samples from the sampler to another person, a mobile laboratory, or an analytical laboratory.

7.10.3.2 Samples will be properly packaged for shipment and dispatched to the appropriate laboratory for analysis with a separate record prepared for each laboratory and each shipping container. Shipping containers will be sealed for shipment to the laboratory. Custody seals should be used on the shipping container to verify the absence of tampering.

7.10.3.3 Whenever samples are split with a facility or government agency, a separate chain-of-custody record is prepared for those samples and marked to indicate with whom the samples are being split.

7.10.3.4 All packages will be accompanied by the chain-of-custody record showing identification of the contents. The original record will accompany the shipment, and a copy will be retained for the project files.

7.10.3.5 If sent by mail, the package will be registered with return receipt requested. If sent by common carrier, the carrier should be indicated on the chain-of-custody record as receiving the samples and, if possible, the bill of lading number should be recorded on the chain-of-custody. Receipts from post offices and bills-of-lading will be retained as part of the permanent documentation.

7.10.4 Chain-Of-Custody Record Instructions

7.10.4.1 The following is a set of instructions detailing the proper manner in which to complete the chain-of-custody form. See Figure 7.10-1 for a copy of the Chain-of-Custody Form.

7.10.4.2 INSTRUCTIONS FOR FILLING OUT CHAIN-OF-CUSTODY RECORD

© Copyright 1993 OHM Remediation Services Corp.

7.9.3.1 Project Name

7.9.3.2 Project Number

7.9.3.3 Project Location

7.9.3.4 Video Cassette number*

7.9.4 The video cassette number can be a number starting with "Tape #1" and increasing sequentially. Since the final number of tapes will not be known until the last tape has been taken, it is not feasible that tapes be numbered tape 1 of ___, tape 2 of ___, etc.. However, at the end of the last tape made a notation can be made that "this tape is the last of 3 tapes (for example) for project #_____". This will make the viewer aware that there are no more tapes for this project.

7.10 Chain-of-Custody Procedures

7.10.1 Because of the evidentiary nature of samples collected during investigation and remediation activities, the possession of samples must be traceable from the time the samples are collected until they are analyzed or used up by the laboratory. To maintain and document sample possession, chain-of-custody procedures are followed as described below.

7.10.2 A sample is under your custody if:

7.10.2.1 It is in your actual possession, or

7.10.2.2 It is in your view, after being in your physical possession, or

7.10.2.3 It was in your physical possession and then you locked it up to prevent tampering, or

7.10.2.4 It is in a designated secure area.

© Copyright 1993 OHM Remediation Services Corp.

FIGURE 7 Map

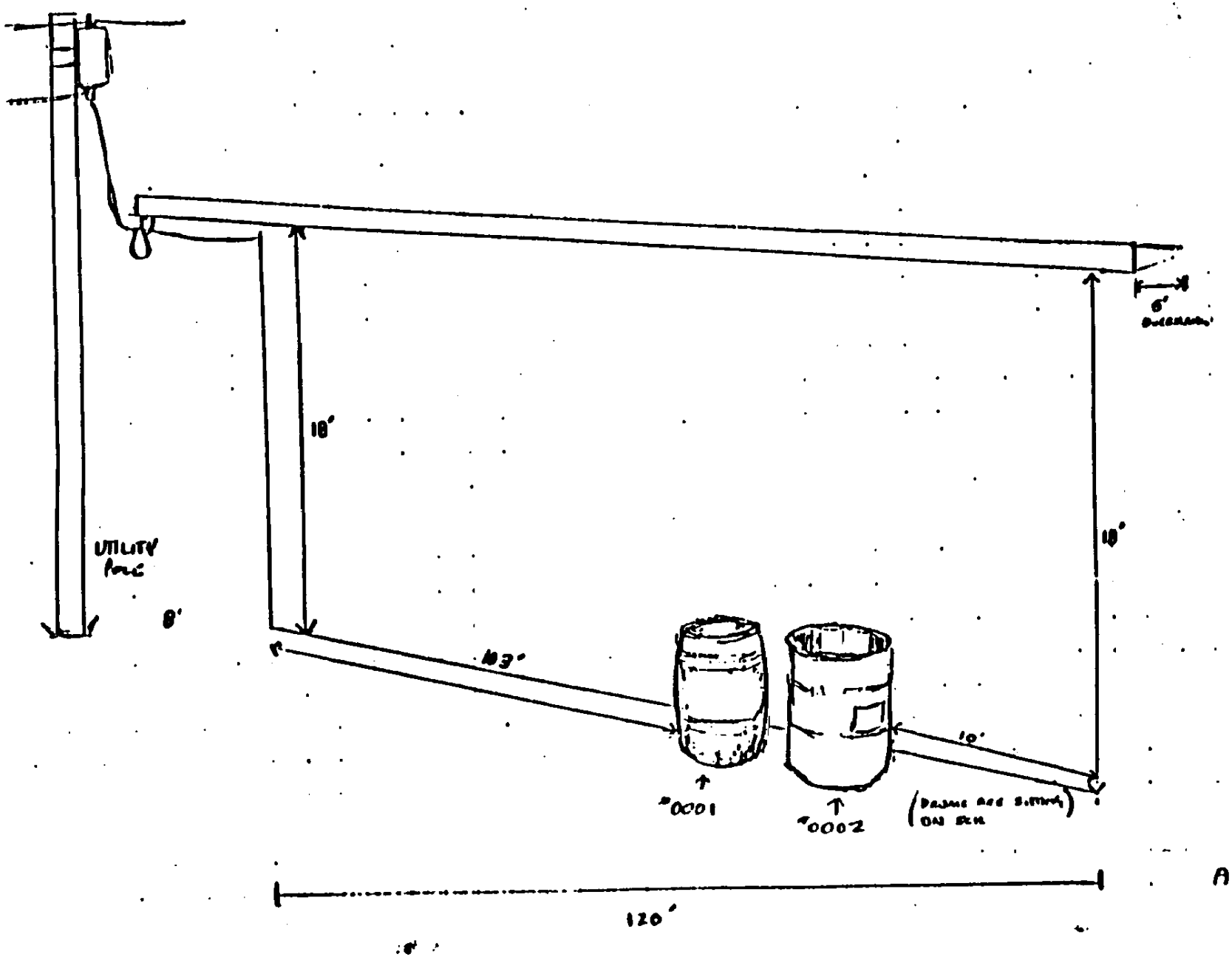

ALLEN RUBBER Co.
WAREHOUSE #3
NORTH WALL
7-6-92

* DRAWING NOT TO SCALE

FIGURE 7.8-1

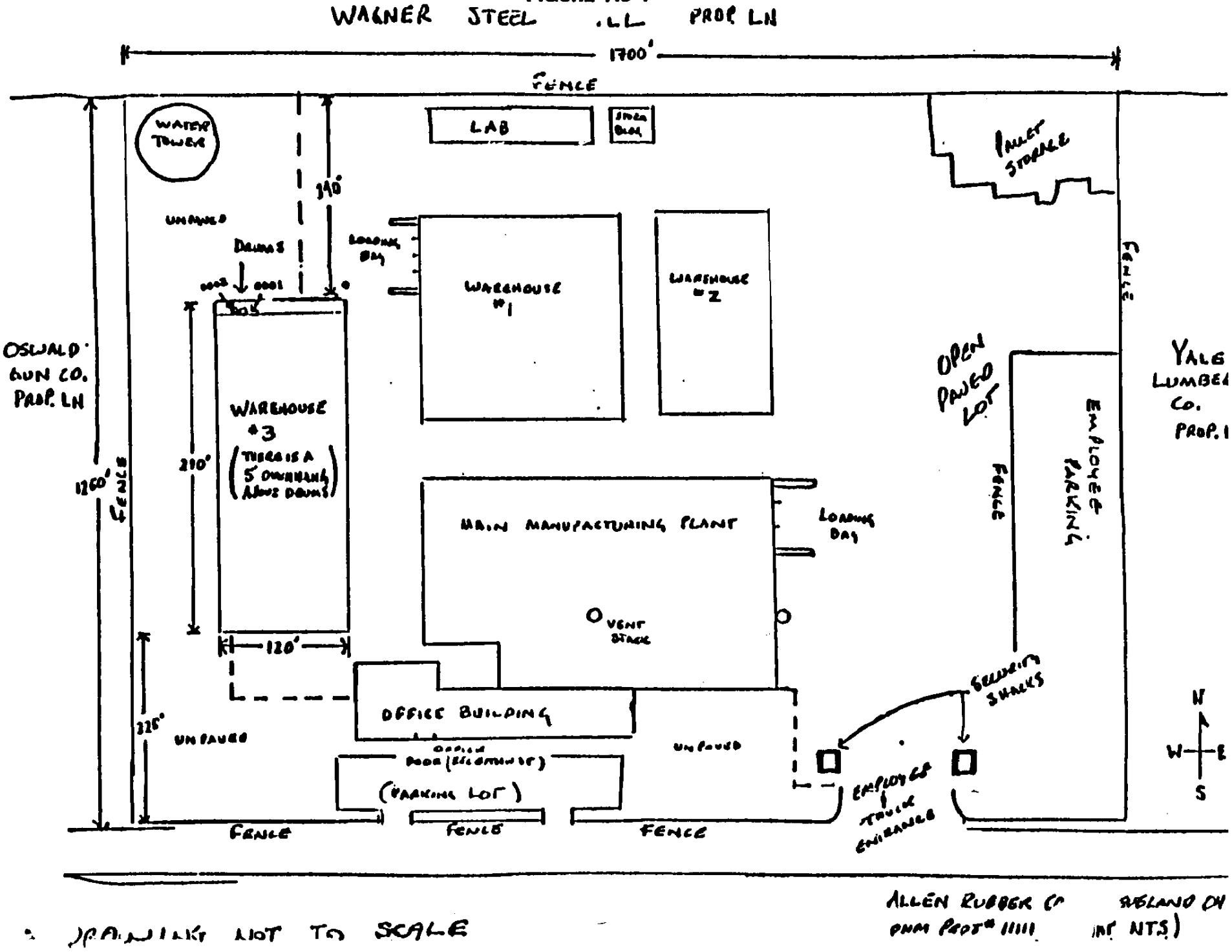

ALLEN RUBBER CO SUBLAND OH
PNM PROJ# 11111 NTS)

DRAWING NOT TO SCALE

7.8.9 Maps are useful for communication with the client and project management to describe the site and show progress. This same map can be used to plot chemical contours, equipment locations, soil borings, and piezometric levels. The site map should be revised whenever changes are made on the job. A copy of all maps and revisions can be sent to Findlay for formalization, or added to the job file. Refer to Figure 7.8-1 for examples of site maps.

7.8.10 Smaller jobs should at least have a site sketch prepared. If this sketch is not to scale, then the words "Not To Scale" should appear on it.

7.9 Photo Documentation

7.9.1 Site video and/or site photographs aid in presenting a clear description of the actual site activities. In addition they can be used as an enhancement to the sampler's notes, the sampler's log, and the site maps. As a good practice, photo documentation should be done for every project site.

7.9.2 When photographs are taken the name of the photographer, date, time, the direction the photograph is taken (i.e. looking North across the soil pile), site location, and site description are entered sequentially in a photograph logbook as photos are taken. Once the film is developed, information should be written on the photograph that corresponds to the logbook descriptions. Disposable cameras can be utilized for obtaining site photographs.

7.9.3 When site video footage is taken, the same information that is necessary on site photographs is also necessary. However, the information can be relayed in one of two ways. The first of these methods is to verbally relay the information during filming. The second of these methods is to use cardboard "cue cards". This method may be the method of choice when obtaining footage in situations where the verbally relayed information may be impaired (i.e. when working around heavy equipment, or when wearing personal protective equipment - such as a respirator). It is always a good idea to have an agenda, whenever possible, prior to taking video footage (this can help in providing a clearer picture for the viewer). Since several video tapes may be generated, it is a good idea to develop a "cue card" for the beginning of each video. This information should include the following:

© Copyright 1993 OHM Remediation Services Corp.

7.8 All sites require some type of map describing the location of the project and what changes take place during a project. A project which involves sampling or air-monitoring activities must have maps drawn up describing locations of sample points, landmarks, treatment equipment, buildings and other reference points. All site maps generated should have the minimum of the following information:

7.8.1 DATE - The date on which the map was generated (Very important).

7.8.2 PROJECT NAME - Name assigned by OHM.

7.8.3 PROJECT LOCATION - City and state where the project is located.

7.8.4 PROJECT NUMBER - Number assigned by OHM.

7.8.5 MAP LOCATION - The area which is being mapped (i.e. Drum Staging Area, Building Z)

7.8.6 BASIC MEASUREMENTS - Any measurements obtained (i.e. Triangulation to a fixed point).

7.8.7 One master map should contain the following information:

7.8.7.1 Survey points and/or survey line (if available).

7.8.7.2 Local landmarks.

7.8.7.3 Locations of OHM trailers, buildings, and equipment.

7.8.7.4 Original data obtained from other maps.

7.8.7.5 Measurements from fixed reference points to sample points.

7.8.7.6 A legend, title, and North arrow.

7.8.8 An easy way to assemble a site map is to set up a survey line along a border of the site (a street or railroad can usually serve this purpose). Take measurements of all items from this line and then transfer to a map.

© Copyright 1993 OHM Remediation Services Corp.

FIGURE 7.7-1 Sample Log Book

SAMPLERS INITIALS

JD - John Dough
DH - DANA HALL

PROJECT MANAGER
AB - Allen BUNDY

Client Representative

SM - SCOTT MAN

NOTE: INFORMATION FOUND IN THIS LOG IS ALSO AVAILABLE ON DRUM INVENTORY LOG SHEETS.

ABBREVIATIONS USED

C.A.C. # = CHAIN OF CUSTODY RECORD (or FORM) NUMBER

FIGURE 7.7-1 Sample Log Book

Sample #	Date	Time	Sample Description	Amount	Samplers Initials	Analysis	Results	C.O.C. #	Comments
0001	7-05-92	1030	GRAY AND WHITE, OPAQUE SOLID (GRANULES).	1 x 32 oz	JD/DH	DISPOSAL		109715	See Also Drum Log # 0001
0002	7-05-92	1005	Colorless, Clear Liquid over Brown, Opaque Liquid.	1 x 32 oz	JD/DH	DISPOSAL		109715	See Also Drum Log # 0002

FIGURE 7.7-1 Sample Log Book

OHM Corporation

800-537-9540

Project # 11111

Daily Log Sample Log

Book # 1 of 1

Allen Rubber Corp

Cleveland, OHIO

7.7.1.4 DESCRIPTION OF SAMPLE - Physical description of sample (e.g., clear red, organic/cloudy, aqueous/brown sludge, or light sandy soil).

7.7.1.5 LOCATION - Description of area sampled (abbreviated form if sampled twice or more--log explaining locations and abbreviations should be attached to or written in front of the logbook).

7.7.1.6 SAMPLER'S INITIALS - Persons obtaining sample (usually two, at least one witnessing if not involved in actual sampling task).

7.7.1.7 VOLUME - Size of sample (8oz, 32oz, etc.).

7.7.1.8 ANALYSIS REQUIRED - The analysis required (or requested) for each sample.

7.7.1.9 RESULTS - Will vary according to project requirements; should be stated in consistent units (ppm, ppb, etc.,) when possible

7.7.1.10 C.O.C. NUMBER - Chain-Of-Custody number for the Chain-Of-Custody that relinquishes custody of a particular sample.

7.7.1.11 ADDITIONAL COMMENTS - Space reserved for any other information concerning a particular sample or special procedure or analysis.

7.7.2 For specific projects, columns may need to be added for different types of analysis. An additional book for sample logging may be needed if different types of samples are being taken which have very different requirements for logging.

7.7.3 All abbreviations of sample points and types of analysis are inserted on the front page of the log book. In addition, the names of all personnel and the initials used by those personnel must also be written on the front page of the log book. Writing in the log book should be neat and in black ink. If a mistake is made, one line should be drawn through it and initialed by the person correcting the mistake. White-out must never be used in a logbook. See Figure 7.7-1 for an example of a sample log book.

© Copyright 1993 OHM Remediation Services Corp.

7.5.1.8 WITNESS - Initials of person witnessing or assisting in taking sample

7.5.2 The sample label is a very important piece of documentation. It is the only method by which the laboratory will be able to identify the sample. The information on the label will be the only way the laboratory will be able to identify the sample from the information on the Chain-of-Custody form. It is imperative that the label information match the information in the sampler's log and on the Chain-Of-Custody form (as well as any other specialized documentation). If there are any discrepancies in this paperwork chain, the samples and data generated could possibly be deemed invalid.

7.5.3 The sample label is completed during or immediately following collection of the sample. All information should be printed neatly and legibly. The sample label is attached to the sample container and the sample information is entered into the sample log (see section 7.5 Sample Logbooks).

7.6 Custody seals are narrow strips of adhesive paper used to demonstrate that tampering has not occurred. They may be used on sampling equipment, sample transport containers, or individual sample jars. Custody seals are required by state or federal regulatory agencies and are to be used for any sampling event. The custody seal, at a minimum, should be signed and dated by the sampler. When actual custody seals are not available, it is acceptable to use an additional sample label as a replacement.

7.7 Sample Logbooks

7.7.1 The logbooks are set up according to project type (drum job, underground recovery, facility decontamination, etc.). ALL samples are logged in these books (including soil, air, water, sludge, etc.). The following columns are standard for all projects:

7.7.1.1 SAMPLE NUMBER - Consecutive series of numbers in which every sample is assigned.

7.7.1.2 DATE - Date sample was obtained.

7.7.1.3 TIME - Military time sampled.

© Copyright 1993 OHM Remediation Services Corp.

7.5 Sample Labels

Figure 7.5-1 below shows an example of an OHM sample label.

Figure 7.5-1

Sample Label

JOB #: 417 Sample #: 001
DATE: 6-20-01 TIME: 1631
SAMPLE: Water from treatment pool #2
H_2SO_4 Added - TPHC
TAKEN BY: BS
WITNESS: EB

7.5.1 The following information is recorded on the label at a minimum:

7.5.1.1 JOB NUMBER

7.5.1.2 SAMPLE NUMBER - Number assigned (i.e. job number - sequential number) in the field during collection of samples. Note: Continue numbering in sequence from the last sample obtained; refer to field sample log.

7.5.1.3 DATE - Month, day, year

7.5.1.4 TIME - Military time (1000, 1400, 2320)

7.5.1.5 SAMPLE - Description of sample (include matrix, point of sample, and preservatives used - if any).

7.5.1.6 ANALYTE - Analysis which will be performed (if more than one analysis is being done on samples from that job).

7.5.1.7 TAKEN BY - Initials of person taking sample

© Copyright 1993 OHM Remediation Services Corp.

FIGURE 7.4-1 Samplers Daily Notes

Corporation

DAILY PROJECT NOTES

Form C
Field Accoun
Rev. 0

2 of 2 Job No. 11111

FRIDAY Date 7-03-92 Client Allen Rubber Corp.

Site Cleveland, OH Weather Cloudy, RAIN, 70°F

ME		ITEM ON D.R
45	JD Develops THE SITE SAMPLING PLAN, DH GENERATES ON AN EQUIPMENT LIST AND GATHERS SUPPLIES.	
10	JD Completes THE SITE SAMPLING PLANS AND SUBMITS IT TO MANUAL LABOR (TECHNICAL SUPERVISOR) FOR REVIEW.	
25	JD MAKES NECESSARY REVISIONS TO THE SAMPLING PLAN AND THEN HELPS DH GATHER EQUIPMENT.	
50	All EQUIPMENT HAS BEEN GATHERED, DISPATCHED AND LOADED INTO VAN #4242. THE PROJECT IS READY TO GO FOR A 0600 MOBILIZATION ON 7-05-92. THE DISPATCH IS TURNED ~~INTO~~ OVER TO THE SECURITY GAURDS. THE ON SITE WORK WILL NOT BE PERFORMED ON 7-04-92 DUE TO THE HOLIDAY.	
00	JD AND DH FINISH WORK FOR THE DAY.	

John Dough 7-03-92

[signature] 7-10-92

FIGURE 7.4-1 Samplers Daily Notes

Corporation

DAILY PROJECT NOTES

Form 004
Field Accountir
Rev. 08/9

Job No. 11111

-RDAH Date 7-03-92 | Client Allen Rubber Corp.

Site Cleveland, OH | Weather Clear, Rain, 70°F

E.	ITEMS ON D.R.
00	John Dough receives a call from Allen Bundy OHM Project Manager. Allen Bundy (AB) Describes the project to John Dough (JD). Work will begin on 7-05-92 at the Allen Rubber Corp. 1331 Kosar Rd. Cleveland, Ohio 23810 Phone (312) 333-0019. AB received a phone call from Scott May of Allen Rubber Corp. concerning the drums at the facility. According to Mr. May (the client representative) the drums exist behind warehouse building number 3. One drum is a poly closed top one half full of brown liquid. The other drum is a steel open top approximately 1/3 full of gray granules. Mr May also noted the the poly drum has a missing bung and that the steel drum has no lid. According to Mr. May the drums have been at that location for approximately one full year. The poly drum most likely contains waste oil from a press once used at the facility. The steel drum possibly contains a floor cleaning agent once used at the facility. AB informs JD that the sampling event will occur on 7-05-92.
7	JD begins writing the sampling plan
	JD breaks for lunch.
30	JD informs Dana Hall of the project and discuss the equipment needed.

John Dough 7-03-92

RECORDKEEPING. If the information is already included on a standard form or field data sheet it does not need to be in the sampling notebook.

7.4.6 Notes must be dated and signed on each page for validity in a court of law. When a consultant is used for making decisions, his remarks must also appear in these notes. Any consultant used should submit a written report including his opinions and conclusions. A copy of this report should be placed in the project file and one copy kept in the sampling file for easy reference.

7.4.7 The person in charge of the sampling program must review these notes daily and initial them at the bottom of each page. This person is also responsible for sending a copy of these notes to the appropriate person in Findlay, Ohio, on a weekly basis. These notes will be reviewed for troubleshooting, quality control, and putting together information for progress reports. See Figure 7.4-1 for an example of sampler's daily notes.

© Copyright 1993 OHM Remediation Services Corp.

7.4.2 Descriptions of special projects such as soil borings, test well installation, and air monitoring must be very detailed. The person taking notes must be knowledgeable enough about these activities to know which details are important.

7.4.3 On the first few pages of the sampler's notes, the names and initials used of site personnel, any abbreviations used, any special notations concerning the scope of work, and a table of contents (if necessary) should be included. Leave enough room for entry of this information prior to beginning the sampler's daily notes.

7.4.4 Enough information should be recorded to present a clear and accurate picture of on-site technical activities. This information should be detailed enough so that another person could retrace your exact steps from your notes. At a later date, should a question arise concerning a specific event or a procedure used, it will be answered from these notes. Some items that would be considered noteworthy are as follows:

7.4.4.1 Termination of a sample point, reasons for termination.

7.4.4.2 Unusual appearance of a sample.

7.4.4.3 Additional samples, reasons for additional sampling.

7.4.4.4 Weather conditions.

7.4.4.5 Levels of protection used (with justification).

7.4.4.6 Meetings and telephone conversations held with clients, regulatory agencies, citizens, or other personnel.

7.4.4.7 Details concerning any samples split with another party.

7.4.4.8 Basic rough measurements.

7.4.4.9 General observations.

7.4.5 There are many other noteworthy occurrences not listed here. A good practice is to try to tell a story of what is happening on the project site. How well you tell the story will determine how well someone else will be able to understand those notes (make your notes and the details in them so that a child could understand). DO NOT DOUBLE-UP ON

© Copyright 1993 OHM Remediation Services Corp.

OHM Corporation

FIGURE 7.3-1
DISPATCH FORM

Form 0018A
Resource Management
Rev. 07/91

ORIGINAL ☒ CORRECTIVE ☐

CONTROL NO. 45080

2. JOB NO./DIV. 11111

3. DESTINATION Cleveland OH

4. CLIENT Allen Rubber Corp.

5. DATE 8/12/93 6. TIME 0800

7. ASSIGNED DRIVER John Dough # 9135

8. TRANSPORTER OHM

9. TRANSFERRED FROM Findlay

10. TRANSFERRED BY Shop Keeper

11. ACCEPTED BY

12. DATA ENTRY BY

13. ENTRY DATE & TIME

14. ENTRY LOCATION

Qty & Type 15. of Container	Hazardous 16. Material	17. Proper D.O.T. Shipping Name	18. Hazard Class	UN/NA 19. Number	Packing 20. Group	Total 21. Weight

IN CASE OF EMERGENCY CALL (800) 537-9540 (24-HOURS/DAY)

Qty & Unit 22. of Measure	23. I.D. Number	24. Personnel, Equipment and Inventory Description	Equip. Mileage 25. or Hours
2 ea		paper towels	
200 ea		sample gloves	
4 ea		wizard gloves	
3 ea		5-gallon buckets	
1 ea		Field Notebook	
1 bottle		dish soap	
1 bottle		bleach	
1 bottle		anti-fog	
2 ea		small respirator brushes	
1 ea		utility Knife	
1 ea		55 gal drum 17HE	

DESTINATION

OHM Corporation

FIGURE 7.3-1
DISPATCH FORM

Form 0018A
Resource Management
Rev. 07/91

1. ORIGINAL ☒ CORRECTIVE ☐ CONTROL NO. 45081
2. TO JOB NO./DIV. 11111
3. DESTINATION Cleveland, OH
4. CLIENT Allen Rubber Corp.
5. DATE 8/12/93 6. TIME CECC
7. ASSIGNED DRIVER John Dough # 9135
8. TRANSPORTER OHM
9. TRANSFERRED FROM Findlay
10. TRANSFERRED BY Shop Keeper
11. ACCEPTED BY
12. DATA ENTRY BY
13. ENTRY DATE & TIME
14. ENTRY LOCATION

Qty & Type 15. of Container	Hazardous 16. Material	17. Proper D.O.T. Shipping Name	18. Hazard Class	UN/NA 19. Number	Packing 20. Group	Total 21. Weight

IN CASE OF EMERGENCY CALL (800) 537-9540 (24-HOURS/DAY)

Qty & Unit 22. of Measure	23. I.D. Number	24. Personnel, Equipment and Inventory Description	Equip. Mileage 25. or Hours
	4242	Van	
	LEL-04	LEL	
	9135	John Dough	
	8013	Dana Hall	
	2PD-13	PID	
	CN-03	CN monotex	
1 rl		garbage bags	
1 bx		tongue depressors	
1	1935	SCBA	
1	5792	SCBA	
1	1534	SCBA	
4	1713	SCBA air bottles	
1 rl		duct tape	
1		sample cooler	
1 rl		sample lables	
1 bd		diapers	
10 ea		32 oz sample jars (EPA)	
2 ea		Mean Streaks	
6 ea		XL tyveks	
6 ea		XL saranes	
6 ea		tyvek hoods	
8 pr		vinyl booties	
10 ea		drum pipettes	

DESTINATION

7.3.2.21 Total Weight - Combined weight of material and container.

7.3.2.22 Qty. & Unit of Measure - Proper number of each item and unit of measure (i.e. each, pair, box)

7.3.2.23 I.D. Number - Employee number, unit number, or inventory number which ever is applicable.

7.3.2.24 Personnel, Equipment, and Inventory Description - Name of listed items in respective order. (Include the driver's name and vehicle number.)

7.3.2.25 Equipment Mileage or Hours - Applicable information for vehicles/equipment.

7.4 Sampling Notes

7.4.1 Because of legalities involved in cleanup activities, it has become necessary for the sampling crew to maintain a set of daily field sampler's notes. Items that must be included are:

7.4.1.1 The reasons samples are taken.

7.4.1.2 Any changes from standard protocol.

7.4.1.3 Safety precautions.

7.4.1.4 Level of personnel protection.

7.4.1.5 Personnel on site.

7.4.1.6 Date

7.4.1.7 Weather

7.4.1.8 The time that a particular entry is made.

7.4.1.9 Descriptions of the work being performed.

7.4.1.10 Communications with the client, site supervisor, or other personnel on site.

© Copyright 1993 OHM Remediation Services Corp.

ATTACHMENT 9.1

ORDER OF DOT HAZARDOUS MATERIAL CLASSIFICATION (49 CFR 173.2)

1. Radioactive material-	demonstrated to be radioactive through the use if radiation survey instruments, having a specific activity greater than 0.002 microcuries per gram (uCi/g). SEC. 6.3.3
2. Poison A-	gasses or liquids of such a nature that a very small amount of the gas, or vapor of the liquid, mixed with air is dangerous to life. SEC. 6.3.4
3. Flammable gas-	meets lower paragraph requirements, plus 13% or less by volume with air forms a flammable mixture. SEC. 6.3.5
4. Nonflammable gas-	material or mixture having in the container an absolute pressure exceeding 40 p.s.i. at 70° F, or regardless of the pressure at 70° F, having an absolute pressure exceeding 104 p.s.i. at 130° F. SEC. 6.3.5
5. Flammable liquid-	any liquid having a flash point below 100° F. SEC. 6.3.6
6. Oxidizer-	substance which readily yields oxygen to stimulate the combustion of organic matter. SEC. 6.3.7
7. Flammable solid-	any solid material, other than explosives, which under normal conditions of transportation are liable to cause fires through friction, retained heat, or can be ignited readily and when ignited burns so vigorously as to create a serious transportation hazard, including water reactive and spontaneous combustibles. SEC. 6.3.6
8. Corrosive material- (liquid)	a material that causes visible destruction or irreversible alterations in human skin tissue at the site of contact or has a sever corrosion rate on steel. SEC. 6.3.8
9. Poison B-	materials which are know to be so toxic to man as to afford a hazard to health during transportation. SEC. 6.3.9
10. Corrosive material- (solid)	a material that causes visible destruction or irreversible alterations in human skin tissue at the site of contact or has a sever corrosion rate on steel. SEC. 6.3.8
11. Irritating material-	a liquid or solid substance which upon contact with fire or when exposed to air gives off dangerous or intensely irritating fumes. SEC. 6.3.10

* Absorbent Pads

* Metal Cans

9.0 ATTACHMENTS

9.1 DOT Hazardous Materials Classification (49 CFR 173.2)

9.2 DOT List of Class -A- Poison (49 CFR 172.101)

9.3 Hazardous Material Shipping Checklist

9.4 Standard Industry Certification Form

9.5 Chain-of-Custody Record Form

9.6 Receipt For Samples Form

9.7 Federal Express Sample Shipment Example

9.8 Sample Check List & Packing

© Copyright 1993 OHM Remediation Services Corp.

ATTACHMENT 9.2

DOT LIST OF CLASS "A" POISON (49 CFR 172.101)

Arsine
Bromoacetone
Chloropicrin and methyl chloride mixture
Chloropicrin and nonflammable, nonliquified compressed gas mixture Cyanogen chloride
Cyanogen gas
Gelatin dynamite (H. E. Germaine)
Grenade (with Poison "A" gas charge)
Hexaethyl tetraphosphate/compressed gas mixture
Hydrocyanic (Prussic) acid solution
Hydrocyanic acid, liquefied Liquid
Insecticide (liquefied) gas containing (Poison "A" or Poison"B" material)
Methyldichloroarsine
Nitric oxide
nitrogen peroxide
nitrogen tetroxide
Nitrogen dioxide, liquid
Parathion/compressed gas mixture
Phosgene (diphosgene)

ATTACHMENT 9.1 cont.

12.Combustible liquid-	any liquid that has a flash point at or above 100° F - no labeling is required for volumes of 110 gal. or less. SEC. 6.3.11
13. ORM-	Other Regulated Material SEC. 6.3.12 a) may pose an unreasonable risk to health, safety or property when transported b) does not meet any of the definitions of the other hazard classes specified
14. ORM-B	material (including a solid wet with water) capable of causing sing significant damage to a transport vehicle from leakage during transport
14. ORM-A	material which has an anesthetic, irritating, noxious, toxic, or other similar property and which can cause extreme annoyance during transportation
15. ORM-E	materials not covered in any other hazard class, but is subject to the requirements of C.F.R., like hazardous waste

ATTACHMENT 9.3 (CONTINUED)

TABLE 1			
MATERIAL	I.D. NUMBER	LABELING	FED. REG. # (49 CFR)
RADIOACTIVE MATERIAL	UN 2982	RADIOACTIVE	173.415-173.416
POISON A	NA 1955	POISONS GAS	173.328
FLAMMABLE GAS	UN 1954	FLAMMABLE GAS	173.302-173.305
NON-FLAMMABLE GAS	UN 1956	NON-FLAMMABLE GAS	173.302-173.305
FLAMMABLE LIQUID	UN 1993	FLAMMABLE LIQUID	173.119
OXIDIZER	UN 1479	OXIDIZER	173.154
FLAMMABLE SOLID	UN 1325	FLAMMABLE SOLID	173.154
CORROSIVE LIQUID	UN 1760	CORROSIVE	173.245a
POISON B	LIQUID UN 2810 SOLID UN 2811	POISON	173.344 LIQUID 173.365 SOLID
CORROSIVE SOLID	UN 1759	CORROSIVE	173.245b
IRRITANT	NA 1693	IRRITANT	173.382
COMBUSTIBLE LIQUIDS	NA 1993	COMBUSTIBLE *	173.118a
ORM-B	NA 1760	NONE	173.505
ORM-A	NA 1693	NONE	173.505
ORM-E	NA 9188	NONE	173.1300

* NO LABEL REQUIRED FOR VOLUMES OF 110 GAL. OR LESS

ATTACHMENT 9.3

HAZARDOUS MATERIALS SHIPPING CHECKLIST

Packaging

1. Check DOT 172.500 table for appropriate type of package for hazardous substance.
2. Check for container integrity, especially the closure.
3. Check for sufficient absorbent material in package.
4. Check for sample tags and log sheets for each sample, and chain-of-custody record.

Shipping Papers

1. Check that entries contain only approved DOT abbreviations.
2. Check that entries are in English.
3. Check that hazardous material entries are specially marked to differentiate them from any nonhazardous materials being set using same shipping paper.
4. Be careful that all hazardous classes are shown for multi class materials.
5. Check total amounts by weight, quantity, or other measures used.
6. Check that any limited-quantity exemptions are so designated on the shipping paper.
7. Offer driver proper placards for transporting vehicle.
8. Check that certification is signed by shipper.
9. Make certain that driver signs for shipment.

RCRA Manifest

1. Check that approved state/federal manifests are prepared.
2. Check that transporter has the following: valid EPA identification number, valid driver's license, valid vehicle registration, insurance protection, and proper DOT labels for materials being shipped.
3. Check that destination address is correct.
4. Check that driver knows where shipment is going.
5. Check that the driver is aware of emergency procedures for spills and accidents.
6. Make certain driver signs for shipment.
7. Make certain one copy of executed manifest and shipping document is retained by shipper.
8. Check that the authorized Base point-of-contact (2750 ABW/EMC) has signed the manifest.

TABLE 3	
ACTIVITY LIMITS FOR EXCEPTED PACKAGES	
NATURE OF CONTENTS	MATERIALS
	PACKAGE LIMITS
SOLIDS	
Special Form	$10^{-3}A_1$
Other Forms	$10^{-3}A_2$
LIQUIDS	$10^{-4}A_2$
GASSES	
Tritium	$2X10^{-2}A_2$
Special Form	$10^{-3}A_1$
Other Forms	$10^{-3}A_2$

TABLE 2				
LIMITS OF NON-FIXED CONTAMINATION ON SURFACES				
Type of Surface	Applicable limit of beta and gamma emitters and low toxicity alpha emitters		Applicable limit of all other alpha emitters	
	Bq/cm²	nCi/cm²	Bq/cm²	nCi/cm²
External Surfaces of:				
- excepted packages	0.4	0.01	0.04	0.001
- other than excepted packages	4	0.1	0.4	0.01
External and Internal surfaces of overpacks and freight containers when used in the carriage of or when being prepared to carry:				
- loads including excepted packages and/or non-radioactive consignments	0.4	0.01	0.04	0.001
- loads consisting only of radioactive material in packages other than excepted packages	4	0.1	0.4	0.01

NOTE: The level of non-fixed radioactive contamination may be determined by wiping an area of 300 cm² (46 in²) of the surface concerned by hand with a dry filter paper, a wad of dry cotton wool or ant other material of this nature. The above limits are applicable when averaged over any area of 300 cm² (46 in²) of any part of the surface.

OHM Corporation

CHAIN-OF-C ODY RECORD

ATTACHMENT 9.5

Form 0019
Technical Services
Rev. 08/89

№ 125067

O.H. MATERIALS CORP. • P.O. BOX 551 • FINDLAY, OH 45839-0551 • 419-423-3526

PROJECT NAME	PROJECT LOCATION
PROJ. NO. / PROJECT CONTACT	PROJECT TELEPHONE NO.
CLIENT'S REPRESENTATIVE	PROJECT MANAGER/SUPERVISOR

ITEM NO.	SAMPLE NUMBER	DATE	TIME	COMP	GRAB	SAMPLE DESCRIPTION (INCLUDE MATRIX AND POINT OF SAMPLE)	NUMBER OF CONTAINERS	ANALYSIS DESIRED (INDICATE SEPARATE CONTAINERS)								REMARKS
1																
2																
3																
4																
5																
6																
7																
8																
9																
10																

TRANSFER NUMBER	ITEM NUMBER	TRANSFERS RELINQUISHED BY	TRANSFERS ACCEPTED BY	DATE	TIME
1					
2					
3					
4					

REMARKS

SAMPLER'S SIGNATURE

LAB COPY

ATTACHMENT 9.4

PRINTED ON RECYCLED PAPER USING SOYBEAN INK — PRINTED WITH SOY INK

ATTENTION SHIPPERS! FREIGHT CHARGES ARE PREPAID ON THIS BILL OF LADING UNLESS MARKED COLLECT.

STRAIGHT BILL OF LADING

ORIGINAL—NOT NEGOTIABLE

Shipper No. 000153

Carrier No. _____

Page ____ of ____ _____ (Name of carrier) (SCAC) Date _____

On Collect on Delivery shipments, the letters "COD" must appear before consignee's name or its otherwise provided in Item 430, Sec. 1

TO:
Consignee _____
Street _____
City _____ State _____ Zip Code _____

FROM:
Shipper _____
Street _____
City _____ State _____ Zip Code _____
24 hr. Emergency Contact Tel. No. _____

Route _____ Vehicle Number _____

No. of Units & Container Type	HM	BASIC DESCRIPTION Proper Shipping Name, Hazard Class, Identification Number (UN or NA), Packing Group, per 172.101, 172.202, 172.203	TOTAL QUANTITY (Weight, Volume, Gallons, etc.)	WEIGHT (Subject to Correction)	RATE	CHARGES (For Carrier Use Only)

PLACARDS TENDERED: YES ☐ NO ☐

REMIT C.O.D. TO: ADDRESS

Note — Where the rate is dependent on value, shippers are required to state specifically in writing the agreed or declared value of the property.
The agreed or declared value of the property is hereby specifically stated by the shipper to be not exceeding

$ _____ per _____

I hereby declare that the contents of this consignment are fully and accurately described above by proper shipping name and are classified, packed, marked and labeled, and are in all respects in proper condition for transport by ☒ Bill ☒ Highway ☒ Water (DELETE NON-APPLICABLE MODE OF TRANSPORT) according to applicable international and national governmental regulations.

_____ Signature

COD Amt: $

Subject to Section 7 of the conditions, if this shipment is to be delivered to the consignee without recourse on the consignor, the consignor shall sign the following statement:
The carrier shall not make delivery of this shipment without payment of freight and all other lawful charges.

_____ Signature of Consignor

C.O.D. FEE: PREPAID ☐ COLLECT ☐ $

TOTAL CHARGES: $

FREIGHT CHARGES
FREIGHT PREPAID except when due at right is checked ☐ Check box if charges are to be prepaid

RECEIVED, subject to the classifications and tariffs in effect on the date of the issue of this Bill of Lading, the property described above in apparent good order, except as noted (contents and condition of contents of packages unknown), marked, consigned, and destined as indicated above which said carrier (the word carrier being understood throughout this contract) as meaning any person or corporation in possession of the property under the contract) agrees to carry to its usual place of delivery at said destination, if on its route, otherwise to deliver to another carrier on the route to said destination. It is mutually agreed as to each carrier of all or any of said property over all or any portion of said route to destination and as to each party at any time interested in all or any said property, that every service to be performed hereunder shall be subject to all the bill of lading terms and conditions in the governing classification on the date of shipment.
Shipper hereby certifies that he is familiar with all the bill of lading terms and conditions in the governing classification and the said terms and conditions are hereby agreed to by the shipper and accepted for himself and his assigns.

SHIPPER _____ CARRIER _____

PER _____ PER _____

DATE _____

1

Permanent post-office address of shipper.

STYLE P60 LABELMASTER, An American Labelmark Co., Chicago, IL 60646 800

PRINTED ON RECYCLED PAPER USING SOYBEAN INK — PRINTED WITH SOY INK

FEDERAL EXPRESS

USE THIS AIRBILL FOR SHIPMENTS WITHIN THE CONTINENTAL U.S.A. AND HAWAII.
USE THE INTERNATIONAL AIR WAYBILL FOR SHIPMENTS TO PUERTO RICO AND ALL NON U.S. LOCATIONS
QUESTIONS? CALL 800-238-5355 TOLL FREE.

AIRBILL PACKAGE TRACKING NUMBER 02656929

4188M 0265692943

2334 8882

3 5 5

FEDEX COPY

1 SENDER'S FEDERAL EXPRESS ACCOUNT NUMBER: 0436-0721-9

Date:

From (Your Name) Please Print:

Your Phone Number (Very Important): 419-423-3526

Company: OHM REMEDIATION SERVICES CORP

Department/Floor No.:

Street Address: 16406 STATE RT 224 EAST

City: FINDLAY State: OH ZIP Required: 45840

2 To (Recipient's Name) Please Print:

Recipient's Phone Number (Very Important): ( )

Company:

Department/Floor No.:

Exact Street Address (We Cannot Deliver to P.O. Boxes or P.O. Zip Codes.):

City: State: ZIP Required:

YOUR INTERNAL BILLING REFERENCE INFORMATION (optional) (First 24 characters will appear on invoice.)

H IF HOLD AT FEDEX LOCATION, Print FEDEX Address Here
Street Address:
City: State: ZIP Required:

3 PAYMENT
1 ☐ Bill Sender Acct. No. Req'd
2 ☐ Bill Recipient's FedEx Acct. No. Fill In Account Number below
3 ☐ Bill 3rd Party FedEx Acct. No. Fill in Account Number below (req'd.)
4 ☐ Bill Credit Card Fill in Credit Card No. below (req'd.)
5 ☐ Cash/Check
Acct./Credit Card No.:
Exp. Date: /

4 SERVICES (Check only one box)

Priority Overnight (Delivery by next business morning)
11 ☐ OTHER PACKAGING
16 ☐ FEDEX LETTER*
12 ☐ FEDEX PAK*
13 ☐ FEDEX BOX
14 ☐ FEDEX TUBE

Standard Overnight (Delivery by next business afternoon; No Saturday delivery)
51 ☐ OTHER PACKAGING
56 ☐ FEDEX LETTER*
52 ☐ FEDEX PAK*
53 ☐ FEDEX BOX
54 ☐ FEDEX TUBE

Economy Two-Day (Delivery by second business day.)
30 ☐ ECONOMY*
* Economy Letter Rate not available. Minimum charge: One pound Economy rate.

Government Overnight (Restricted for authorized users only)
46 ☐ GOVT LETTER
41 ☐ GOVT PACKAGE

Freight Service (for packages over 150 lbs.)
70 ☐ OVERNIGHT FREIGHT** (Centered reservation required)
80 ☐ TWO-DAY FREIGHT**
† Delivery commitment may be later in some areas.
*Declared Value Limit $500
**Call for delivery schedule

5 DELIVERY AND SPECIAL HANDLING (Check services required)

Weekday Service
1 ☐ HOLD AT FEDEX LOCATION WEEKDAY (Fill in Section H)
2 ☐ DELIVER WEEKDAY

Saturday Service
31 ☐ HOLD AT FEDEX LOCATION SATURDAY (Fill in Section H)
3 ☐ DELIVER SATURDAY (Extra charge) (Not available to all locations)
9 ☐ SATURDAY PICK-UP (Extra charge)

Special Handling
4 ☐ DANGEROUS GOODS (Extra charge)
6 ☐ DRY ICE (Dangerous Goods Shipper's Declaration not required)
by lbs. (UN 1845) _____ x _____ kg. 904 ☐
☐ DESCRIPTION
12 ☐ HOLIDAY DELIVERY (If offered) (Extra charge)

6

PACKAGES	WEIGHT In Pounds Only	YOUR DECLARED VALUE (See right)
Total	Total	Total

DIM SHIPMENT (Chargeable Weight)
☐ _____ lbs.
L x W x H

Received At
1 ☐ Regular Stop
2 ☐ On-Call Stop
3 ☐ Drop Box
4 ☐ B S C
5 ☐ Station

SERVICE CONDITIONS, DECLARED VALUE AND LIMIT OF LIABILITY

Use of this airbill constitutes your agreement to the service conditions in our current Service Guide, available upon request. See back of sender's copy of this airbill for information. Service conditions may vary for Government Overnight Service. See U.S. Government Service Guide for details.

We will not be responsible for any claim in excess of $100 per package, whether the result of loss, damage, delay, non-delivery, misdelivery, or misinformation, unless you declare a higher value, pay an additional charge, and document your actual loss for a timely claim. Limitations found in the current Federal Express Service Guide apply. Your right to recover from Federal Express for any loss, including intrinsic value of the package, loss of sales, income interest, profit, attorney's fees, costs, and other forms of damage whether direct, incidental, consequential, or special is limited to the greater of $100 or the declared value specified to the left. Recovery cannot exceed actual documented loss. The maximum Declared Value for FedEx Letter and FedEx Pak packages is $500.

In the event of untimely delivery, Federal Express will at your request and with some limitations refund all transportation charges paid. See Service Guide for further information.

7 Sender authorizes Federal Express to deliver this shipment without obtaining a delivery signature and shall indemnify and hold harmless Federal Express from any claims resulting therefrom.

Release Signature:

Federal Express Use
Base Charges
Declared Value Charge
Other 1
Other 2
Total Charges

REVISION DATE 3/94
PART #137204 FXEM 6/94
FORMAT #158
158
© 1992-93 FEDEX
PRINTED IN U.S.A.

ATTACHMENT 9.7

OHM REMEDIATION SERVICES CORP
MIDWEST DIVISION - TECHNICAL SERVICES
LABORATORY SAMPLE RECEPTION CONFIRMATION

Telephone #: 800/537-9540, Ex 4198 or 4266 FAX #: 419/425-6085

Send to the Attention of: **Chet Scheibel**

TO BE COMPLETED BY THE LABORATORY
NOTE: A Copy of the COCs must be Enclosed with this Form

DATE: _____

LABORATORY NAME: _____

LABORATORY LOCATION: _____

PREPARED BY: _____
(PRINT LEGIBLY)

PROJECT NUMBER: _____

DATE SAMPLES RECEIVED: _____

NUMBER OF SAMPLES: _____

SOIL: _____

WATERS: _____

SOLIDS: _____

TURN-AROUND-TIME REQ: _____

TO BE COMPLETED BY OHM TECH SERV LAB PROCUREMENT DEPARTMENT:

DATE RESULTS RECEIVED BY OHM: _____

METHOD OF RECEPTION: ____ Fax ____ Fed X ____ Mail

ACTUAL TURN-AROUND-TIME: _____

VALUE OF SAMPLE ANALYSIS: $_____

ATTACHMENT 9.6

ATTACHMENT 9.7

FEDERAL EXPRESS

USE THIS AIRBILL FOR DANGEROUS GOODS SHIPMENTS ONLY WITHIN THE CONTINENTAL U.S.A., ALASKA AND HAWAII
USE THE INTERNATIONAL AIR WAYBILL FOR SHIPMENTS TO PUERTO RICO AND ALL NON U.S. LOCATIONS
QUESTIONS? CALL 800-238-5355 TOLL FREE.

AIRBILL - PACKAGE TRACKING NUMBER 2401803972

2401803972

42298 FEDERAL EXPRESS ACCOUNT NUMBER | Date

36-0721-9
Our Name (Please Print)

Your Phone Number (very important): 419-423-3526

Department/Floor No.

Company: DHM REMEDIATION SERVICES CORP

Street Address: 16406 STATE RT 224 EAST

City: FINDLAY State: OH ZIP Required: 45840

YOUR INTERNAL BILLING REFERENCE INFORMATION (optional) (First 24 characters will appear on invoice.)

2 To (Recipient's Name) Please Print | Recipient's Phone Number (very important) ( )

Company | Department/Floor No.

Exact Street Address (We cannot Deliver to P.O. Boxes or P.O. Zip Codes.)

City | State | ZIP Required

3 PAYMENT 1 ☐ Bill Sender Acct. No. Req'd. 2 ☐ Bill Recipient's FedEx Acct. No. Fill in Account Number below 3 ☐ Bill 3rd Party FedEx Acct. No. Fill in Account Number below (Req'd.) 4 ☐ Bill Credit Card Fill in Credit Card No. below (Req'd.) Exp. Date
5 ☐ Cash/Check Acct./Credit Card No.

H IF HOLD AT FEDEX LOCATION, Print FEDEX Address here (Not available at all locations)
Street Address | City | State | ZIP Required

4 SERVICES (Check only one box)

Priority Overnight 11 ☐ | Standard Overnight 51 ☐
Economy Two-Day 30 ☐ | Government Overnight 41 ☐

Freight Service (for packages over 150 lbs.)
70 ☐ OVERNIGHT FREIGHT** (Commitment information required) | 60 ☐ TWO-DAY FREIGHT**
† Delivery commitment may be set later in same period. **Call for delivery schedule.

INSTRUCTIONS (Mark appropriate boxes)
- Dangerous Goods as per attached Shipper's Declaration ☐
- Dangerous Goods Shipper's Declaration not required ☐
- Cargo Aircraft only ☐

5 DELIVERY AND SPECIAL HANDLING (Check services required)

Weekday Service
1 ☐ HOLD AT FEDEX LOCATION WEEKDAY (Fill in Section H)
2 ☐ DELIVER WEEKDAY

Saturday Service
31 ☐ HOLD AT FEDEX LOCATION SATURDAY (Fill in Section H)
3 ☐ DELIVER SATURDAY (Extra charge.) (Not available in all locations)
9 ☐ SATURDAY PICK-UP (Extra charge)

Special Handling
4 ☒ DANGEROUS GOODS (Extra charge)
6 ☐ DRY ICE (Dangerous Goods Shipper's Declaration not required)
☐ DESTINATION
12 ☐ HOLIDAY DELIVERY (Extra charge)

6 | PACKAGES | WEIGHT (In Pounds Only) | YOUR DECLARED VALUE (Enter right)
Total | Total | Total

DIM SHIPMENT (Chargeable Weight) ☐ _____ lbs.
L x W x H

Received At: 1 ☐ Regular Stop 2 ☐ On-Call Stop 3 ☐ Drop Box 4 ☐ B.S.C. 5 ☐ Station

SERVICE CONDITIONS, DECLARED VALUE AND LIMIT OF LIABILITY

Use of this airbill constitutes your agreement to the service conditions in our current Service Guide, available upon request. See back of sender's copy of this airbill for Promission. Service conditions may vary for Government Overnight Service. See U.S. Government Service Guide for details.

We will not be responsible for any claim in excess of $100 per package, whether the result of loss, damage, delay, non-delivery, misdelivery, or misinformation, unless you declare a higher value, pay an additional charge, and document your actual loss for a timely claim. Limitations found in the current Federal Express Service Guide apply. Your right to recover from Federal Express for any loss, including intrinsic value of the package, loss of sales, income interest, profit, attorney's fees, costs, and other forms of damage whether direct, incidental, consequential, or special is limited to the greater of $100 or the declared value specified in the left. Recovery cannot exceed actual documented loss.

In the event of untimely delivery, Federal Express will at your request and with some limitations refund all transportation charges paid. See Service Guide for further information.

SIGNATURE RELEASE UNAVAILABLE

Federal Express Use
Base Charges
Declared Value Charge
Other 1
Other 2
Total Charges

REVISION DATE 4/94
PART#145691 GBFE 7/94
FORMAT #157
157
© 1992-93 FDX
PRINTED IN U.S.A.

FEDEX COPY

2401803972

Two completed and signed copies of this Declaration must be handed to the operator.

WARNING

Failure to comply in all respects with the applicable Dangerous Goods Regulations may be in breach of the applicable law, subject to legal penalties. This Declaration must not, in any circumstances, be completed and/or signed by a consolidator, a forwarder or an IATA cargo agent.

TRANSPORT DETAILS

This shipment is within the limitations prescribed for: (delete non applicable)

PASSENGER AND CARGO AIRCRAFT	CARGO AIRCRAFT ONLY

Airport of Departure:

Airport of Destination:

Shipment type: (delete non-applicable)

NON-RADIOACTIVE	RADIOACTIVE

NATURE AND QUANTITY OF DANGEROUS GOODS

Dangerous Goods Identification				Quantity and type of packing	Packing Inst.	Authorization
Proper Shipping Name	Class or Division	UN or ID No.	Subsidiary Risk			

Additional Handling Information

I hereby declare that the contents of this consignment are fully and accurately described above by proper shipping name and are classified, packed, marked, and labeled, and are in all respects in the proper condition for transport by air according to the applicable International and National Government Regulations.

Name/Title of Signatory

Place and Date

Signature (see warning above)

Emergency Telephone Number (Required for US Origin or Destination Shipments)

IF ACCEPTABLE FOR PASSENGER AIRCRAFT, THIS SHIPMENT CONTAINS RADIOACTIVE MATERIAL INTENDED FOR USE IN, OR INCIDENT TO, RESEARCH, MEDICAL DIAGNOSIS, OR TREATMENT.

ATTACHMENT 9.8

OHM Corporation

SHIPMENT CHECK LIST

PROJECT NAME: Allen Rubber Corp
PROJECT No.: 11111
STREET ADDRESS: 1331 Kosar Rd
DATE: 7/05/92 TIME: 1141
CITY/STATE/ZIP: Cleveland, OH 10 29810
PHONE NUMBER: (30) 333-0019
FAX NUMBER: (N/A

SAMPLE CHECK LIST

	YES	NO	COMMENTS
SAMPLE LIDS ARE TIGHT AND CUSTODY SEALS IN PLACE?	☒	☐	
ARE ALL SAMPLE NUMBERS, DATES, TIMES AND OTHER LABEL INFORMATION LECIBLE AND COMPLETE?	☒	☐	
HAS ALL SAMPLE NUMBERS, DATES, TIMES AND OTHER SAMPLING DATA BEEN LOGGED INTO THE SAMPLE LOG BOOK?	☒	☐	
DO SAMPLE NUMBERS AND SAMPLE DESCRIPTION ON THE LABELS MATCH WITH THOSE ON THE COC?	☒	☐	
HAVE THE SAMPLES BEEN PROPERLY PRESERVED?	☒	☐	
HAVE THE CHAIN OF CUSTODIES BEEN FILLED OUT COMPLETELY AND CORRECTLY?	☒	☐	
DOES THE ANALYLICAL SPECIFIED ON THE COC MATCH THE ANALYTICAL SPECIFIED IN THE SCOPE OF WORK?	☒	☐	
HAVE THE COC'S BEEN PROPERLY SIGNED IN THE TRANSFER SECTION?	☒	☐	

PACKAGING CHECK LIST

	YES	NO	COMMENTS
HAS EACH SAMPLE BEEN PLACED INTO AN INDIVIDUAL PLASTIC BAG?	☒	☐	
HAS THE DRAIN PLUG OF THE COOLER BEEN TAPED CLOSED WITH WATER PROOF TAPE FROM THE INSIDE?	☒	☐	
HAS THE BOTTOM OF THE COOLER BEEN LINED WITH AT LEAST THREE INCHES OF CUSHIONING ABSORBANT PADS?	☒	☐	
HAVE ALL SAMPLES BEEN PLACED INTO THE COOLER IN AN UPRIGHT POSITION?	☒	☐	
IS THERE ADEQUATE SPACING OF SAMPLES SO THAT THEY WILL NOT TOUCH DURING SHIPMENT?	☒	☐	
HAVE AN ADEQUATE NUMBER OF BLUE ICE PACKS BEEN PLACED AROUND AND ON TOP OF THE SAMPLES?	☒	☐	
HAS FRESH BLUE ICE BEEN ADDED TO THE COOLER THE DAY OF SHIPMENT?	☒	☐	
HAS THE COOLER BEEN FILLED WITH ADDITIONAL CUSHIONING MATERIAL?	☒	☐	
HAS THE COC BEEN PLACED IN A ZIPLOCK BAG AND TAPED TO THE INSIDE OF THE LID OF THE COOLER?	☒	☐	
HAVE CUSTODY SEALS BEEN PLACED ONTO THE LID?	☒	☐	
HAS THE COOLER BEEN LABLED "THIS SIDE UP"?	☒	☐	
HAS THE COOLER BEEN LABELED WITH THE DOT PROPER SHIPPING NAME, UN/NA NUMBER AND PLACARD?	☒	☐	Low Level Contaminated Soil
HAS THE LABORATORY PERFORMING THE ANALYSES BEEN NOTIFIED OF THE SHIPMENT OF SAMPLES?	☒	☐	

PROBLEMS/RESOLUTIONS:

PREPARED BY: John Tausch SIGNATURE: John M. Tausch

OHM Corporation

QUALITY POLICY AND PROCEDURE APPROVAL AND REVISION RECORD

Document # QP-607	Title **Tank Sampling**

APPROVAL

Name	Title	Signature	Date
Willis Moody	Super. QA/QC		8/2/94
G. J. Herzig	Mngr. Field Tech.		8/2/94
Terry Sole	Dir. Tech. Svcs.		8/2/94

REVISION RECORD

Ltr.	Date	Change Description	Initials						
1		issue	-	-	-	-	-	-	-
2									
3									
4									
5									
6									
7									
8									
9									
10									
11									
12									
13									
14									
15									

form # qp607-rev 00

OHM Corporation

STANDARD OPERATING PROCEDURE

Title: Tank Sampling **Document #:** QP-607

Date Issued: August 2, 1994 **Rev:** 0 **Date:** July 27, 1994

1.0 PURPOSE

1.1 To describe the procedures to be used for sampling tanks and vessels.

2.0 SCOPE

2.1 This procedure is applicable to tank samples which are described as follows: A tank sample is an aliquot of a material(s) (Liquid,Sludge,Solids) from any type of vessel or tank with a capacity of over 120 gallons. These vessels can be underground storage tanks, vats, process vessels, tank cars and other types of containers.

3.0 RELATED DOCUMENTS

3.1 See SOP Documentation QP-605

3.2 See SOP Packaging and Shipping QP-606

3.3 See SOP PID units QP-629

4.0 GENERAL INFORMATION

None

5.0 DEFINITIONS

None

© Copyright 1994 - OHM Remediation Services Corp.

6.0 RESPONSIBILITIES

6.1 Sample technicians have the responsibility to maintain correct documentation, maps with sample point locations and tank locations, Chain-of-Custody forms, sample logbooks and applicable field data sheets.

7.0 PROCEDURE

7.1 On many projects performed by OHM Remediation Services Corporation there is some type of vessel or tank which will need to be sampled at one time or another. These can range from an underground storage tank to a vat inside a building. In addition, there are also other projects which contain a large number of tanks and vessels to be sampled. The following section describes specific details associated with tank sampling.

7.1.1 Difficulties and Dangers

7.1.1.1 The sampling of tanks, vats, process vessels, tank cars, and other types of containers presents unique problems. Generally, containers of this type are closed except for small access ports, manways, or hatches on the larger vessels, or taps and bungs on smaller vessels. The physical size, shape, materials of construction, and locations of access will limit the types of equipment and methods of collection.

7.1.2 Toxic or Flammable Gas Hazards

7.1.2.1 When liquids are contained in sealed vessels, gas vapor pressures build up, sludge settles out, and density layering develops. When containers are opened, the potential for explosive reactions or the release of noxious gases requires considerable safeguards. The vessels should be opened with extreme caution; preliminary sampling of any headspace gases is always warranted and Level B protection is standard until the dangers are well understood.

© Copyright 1994 - OHM Remediation Services Corp.

7.1.3 Tank Physical Hazards

7.1.3.1 Another source of danger is climbing on old rusty tanks, some of which may be over 30 feet tall. Old and rusty metal ladders should not be trusted; neither should tank tops which are almost rusted through. Always use OSHA approved ladders if ladders are needed.

7.1.4 PPE Associated Hazards

7.1.4.1 Even when the tank is in good condition, climbing on it with protective clothing which restricts one's movements, and an SCBA on one's back is dangerous. There are many situations where a manlift should be used. Slip, trip, and fall hazards become magnified when in levels A through C.

7.2 Tank Inspection

7.2.1 Proper tank inspection is necessary for safety and efficiency in sampling or working on the tank, and because the information generated may be input to a proposal. It is important that accurate tank dimensions and tank orientation be recorded on a tank inspection sheet (see Figure 7.1-1 & Table 7.1). The location, size, type, and condition of valves is important. Tank condition should be detailed. The height and size of the dike surrounding the tank should be noted. Manways, vents, vacuum breakers, and pressure relief valves should be noted. TABLE 7.1

7.2.2 Tracing pipes connected to a tank will indicate whether it is connected to another reservoir of liquid. After all, one must bear in mind that any valve in the line may be open or broken. It is important to note whether tank jacketing or pipe insulation is asbestos. Tank liners, especially glass, should also be noted.

7.2.3 During the inspection, each tank should be assigned a unique number. This number should be painted on two or more sides of the tank. To aid visibility, the characters should be at least 1 inch or more tall.

© Copyright 1994 - OHM Remediation Services Corp.

OHM Corporation

TANK SAMPLING DATA SHEET

PROJECT NUMBER _____
PROJECT NAME _____
TANK NO. _____

ORIENTATION: ☐ VERTICAL ☐ HORIZONTAL
LOCATION: ☐ ABOVE GROUND ☐ UNDERGROUND
CONDITION: ☐ EXCELLENT ☐ POOR ☐ GOOD ☐ LEAKING ☐ FAIR
CONSTRUCTION: ☐ METAL ☐ FIBERGLASS ☐ LINED

SHAPE: ☐ SPHERICAL ☐ CYLINDRICAL ☐ RECTANGULAR
TYPE COVER: ☐ CONCRETE ☐ ASPHALT
CONTROL DIKE: ☐ EXCELLENT ☐ POOR ☐ GOOD ☐ LEAKING ☐ FAIR ☐ NONE
SPECIALTIES: ☐ HEATED ☐ PRESSURIZED ☐ INSULATED JACKET

LAYERS	PHYSICAL STATE				COLOR	CLARITY			LAYER THK. (IN)	ESTIMATED VOLUME (GALLONS)
	LIQUID	SOLID	GEL	SLUDGE	USE STD. COLORS	CLEAR	CLOUDY	OPAQUE		
TOP										
MIDDLE										
BOTTOM										

CAPACITY: _____
HEIGHT: _____
LENGTH: _____
DIAMETER: _____
WIDTH: _____

DOT HAZ: _____
UN/NA: _____
HFPA: ◇
Ph: _____
PID: _____
DOSIMETER: _____ MREM/H

CHEMICAL NAME:

LABORATORY COMPATIBILITY DATA

☐ MARK IF PHYSICAL STATE AND COLOR MATCHES THE ABOVE INFORMATION. IF NOT, STOP ANALYSIS AND NOTIFY PROJECT CONTACT. FURTHER WORK WILL NOT BE PAID FOR.

COMPATIBILITY CAT: _____
ANALYSTS: _____
DATE PERFORMED: _____

RADIATION: POS ☐ NEG ☐ ____ MREM/HR

LAYERS	PHYS. STATE: LIQUID	SOLID	GEL	SLUDGE	COLOR	CLARITY: CLEAR	CLOUDY	OPAQUE	WATER SOL	REACT	pH	HEX. SOL	PER	OXID	CN	SUL	BIEL-STEIN	FLASH POINT	PCBs (>25ppm)	PCB TEST NUMBER
					USE STD COLORS				SOLUBILITY SPSI DENSITY H OR L	A=AIR W=WATER	STD. UNIT	S OR 1	+ OR −	+ OR −	+ OR −	+ OR −	+ OR −	<60°C + OR −	+ OR −	
T																				
M																				
B																				

COMMENTS: _____

PCB CONC. _____ PPM FLASH POINT _____ °C COMPATIBILITY COMP. BULK # _____
DATA REVIEWER: _____ DATA REVIEW DATE: _____
FIELD REVIEWER: _____ FIELD REVIEW DATE: _____

TRANSFER NUMBER	TRANSFERS RELINQUISHED BY	TRANSFERS ACCEPTED BY	DATE	TIME
1				
2				
3				
4				
5				

F-219 06-25-92

Figure 7-1 Tank Sampling Data Sheet

HM Corporation

TANK SAMPLING DATA SHEET

PROJECT NUMBER _____
PROJECT NAME _____
TANK NO. _____

ECT LOCATION _____ LOGGER _____ DATE _____
ECT CONTACT _____ SAMPLER _____ TIME _____
PHONE _____ WEATHER _____

2	Ft		23	11	Ft		710	20	Ft		2050
2	Ft	6 in	36	11	Ft	6 in	776	20	Ft	6 in	2469
3	Ft		52	12	Ft		846	21	Ft		2591
3	Ft	6 in	71	12	Ft	6 in	918	22	Ft	6 in	2974
4	Ft		94	13	Ft		922	23	Ft		3108
4	Ft	6 in	118	13	Ft	6 in	1070	23	Ft	6 in	3244
5	Ft		146	14	Ft		1151	24	Ft		3384
5	Ft	6 in	177	14	Ft	6 in	1235	24	Ft	6 in	2526
6	Ft		211	15	Ft		1321	25	Ft		3672
6	Ft	6 in	248	15	Ft	6 in	1411	25	Ft	6 in	3820
7	Ft		287	16	Ft		1504	26	Ft		3971
7	Ft	6 in	330	16	Ft	6 in	1599	27	Ft		4283
8	Ft		376	17	Ft		1697	28	Ft		4606
8	Ft	6 in	424	17	Ft	6 in	1799	29	Ft		4941
9	Ft		475	18	Ft		1903	30	Ft		5287
9	Ft	6 in	530	18	Ft	6 in	2010	31	Ft		5646
10	Ft		587	19	Ft		2120	32	Ft		6016
10	Ft	6 in	640	19	Ft	6 in	2234				

RECOMMENDATIONS _____

ESS: _____

COMMENTS _____

DIAGRAM OF TANK:
(INCLUDE RAW MEASUREMENTS)

VERTICAL TANKS
United States Gallons in Round Tanks
Inside Diameter for 1-Foot Depth

Tank Diameter	U.S. Gals.	Tank Diameter	U.S. Gals.	Tank Diameter	U.S. Gals.
2 ft	23	11 ft,6 in	776	20 ft,6 in	2,469
2 ft,6 in	36	12 ft	846	21 ft	2,591
3 ft	52	12 ft,6 in	918	21 ft,6 in	2,715
3 ft,6 in	71	13 ft	922	22 ft	2,843
4 ft	94	13 ft,6 in	1070	22 ft,6 in	2,974
4 ft,6 in	118	14 ft	1151	23 ft	3,108
5 ft	146	14 ft,6 in	1235	23 ft,6 in	3,244
5 ft,6 in	177	15 ft	1321	24 ft	3,384
6 ft	211	15 ft,6 in	1411	24 ft,6 in	2,526
6 ft,6 in	248	16 ft	1504	25 ft	3,672
7 ft	287	16 ft,6 in	1599	25 ft,6 in	3,820
7 ft,6 in	330	17 ft	1697	26 ft	3,971
8 ft	376	17 ft,6 in	1799	27 ft	4,283
8 ft,6 in	424	18 ft	1903	28 ft	4,606
9 ft	475	18 ft,6 in	2010	29 ft	4,941
9 ft,6 in	530	19 ft	2120	30 ft	5,287
10 ft	587	19 ft,6 in	2234	31 ft	5,646
10 ft,6 in	640	20 ft	2350	32 ft	6,016
11 ft	710				

© Copyright 1994 - OHM Remediation Services Corp.

7.3 Headspace Gases

7.3.1 Headspace gases are the accumulated gaseous components found above solid or liquid layers in closed vessels. These gases may be the result of volatilization, degradation, or chemical reaction. Poorly ventilated or partially sealed areas can also act to concentrate gas vapors.

7.3.2 Component concentrations normally exceed those found in ambient measurements. Therefore, techniques used to monitor low-level hazardous gases must be modified for handling these higher concentrations and for the remote sensing of tank contents. The anticipated higher concentrations can be dealt with by altering the instrument detector range, reducing the sample gas flow rate into the instrument, or utilizing a sample dilution system. These techniques are necessary for the prevention of saturation, poisoning, and/or gross deterioration of the detector element. When lengthy extensions are used, one must also take into account increased time-lags for instrument response.

7.3.3 Most ambient measurement devices have sample intakes which are highly directional and localized. The use of an extension will allow the operator to maintain a safe position while obtaining samples from varying depths and distances within containers.

7.3.4 Poorly ventilated vessels can usually be sampled for headspace gases through small hatches or openings. Fully sealed vessels must be approached more cautiously since breaching may result in the uncontrolled release of pressurized gases or the potential for violent reactions with the ambient atmosphere. Any decision to open a sealed vessel should be based on sound need. For on-site work both the supervisor and the health and safety officer (HSO) need to be informed of this type of situation . Depending on specific circumstances, special permission to open sealed vessels may be required. The investigator must be cognizant of the inherent dangers, and take appropriate safety precautions.

7.3.5 The parameters which must be checked are oxygen content, explosiveness, and toxicity. Oxygen content and explosiveness must be checked first, since the PID, which is used to measure organic vapors, is not intrinsically safe. Toxicity may be assessed from PID or OVA readings and/or Drager tube readings. Because vapors with various densities will stratify, readings must be taken at the top, middle and bottom of the tank. These readings should be recorded on the tank inspection sheet and in the field log note book.

© Copyright 1994 - OHM Remediation Services Corp.

7.3.6 Flame ionization detectors, such as OVA and LEL, that utilize the sample gas stream as their combustion air may have insufficient oxygen for combustion and will likely require use of a dilution probe. The introduction of entrained droplets from the container contents should also be avoided. Careful handling of the extension tube to avoid close contact with the materials surface (and in some instances the use of a glass wool filter plug) will prevent material build-up in the probe and detector.

Note: When a pressurized vessel is encountered, notify the site supervisor and/or the HSO. This vessel will require special handling.

7.4 Determination and Measurement of Layering

7.4.1 Determination and measurement of layering in tanks is essential to quantify each type of material in the tanks. There are a variety of methods to accomplish this, such as:

7.4.1.1 Tank gauging tape/ORS interface probe - These probes are able to distinguish between liquids which conduct electricity and those which do not. This allows one to distinguish an aqueous layer from a light or heavy immiscible organic layer. The probe is lowered on a measuring tape. Consult the ORS manual for operating instructions. The standard probe must not be used with chlorinated organics. However, the units can be ordered with probes which are compatible with all solvents.

7.4.1.2 Sludge Judge - The Sludge Judge is an acrylic tube, in 5 foot sections, which is marked off in feet and has a check valve at the bottom. While it is too difficult to decontaminate to make it useful for sampling, it can be used to observe layering. However, it is degraded quickly by exposure to most organic solvents.

7.4.1.3 Stick with waterfinder paste - If one is certain that there is only a light organic layer, an aqueous layer, and sludge in the tank, then the tank may be "stuck." The stick is coated on one side with water finder paste. Then it is lowered slowly into the tank. When the liquid surface is reached, the stick is marked at hatch level. When resistance is felt, indicating the top of the dense sludge, the stick is again marked. When the bottom of the tank is reached the stick is marked again. One must

© Copyright 1994 - OHM Remediation Services Corp.

be careful because a dense immiscible solvent layer can cause a false bottom of sludge to be formed between it and the aqueous layer. This results from solids whose density is between that of water and of the dense solvent.

7.4.1.4 Depth Composite - A sample which reflects layering with depth. An accurate depth composite can give a good indication of layering. Measurements of layers in the sample can be scaled up to give rough measurements of the layers in the tank.

7.4.1.5 Frost Line - The band which separates the organic liquids from the water. Organic liquids generally have lower heat capacities than does water. As a result, on cool mornings of temperatures below 32^0F one can sometimes see frost on a tank with a band that is frost-free that corresponds to the location of an aqueous layer.

7.4.2 After measurements are taken, volumes can be calculated. This is straight forward in every case except that of a cylindrical tank on its side or a spherical tank. For horizontal cylindrical tanks, use the nomograph on the following page. For spherical tanks call Field Analytical Services for guidance.

7.4.2.1 Vertical Tanks

7.4.2.1.1 To find the volume of a vertical tank, find the diameter of the tank on Table 7.1 and multiply it by the height of the material in feet. This will give you the volume of material in gallons.

7.4.2.1.2 Another method to calculate the volume is to use the equation below. This will give you the volume of material in gallons. (1 cubic foot = 7.48. gallons)

$$V=(Pi(r)^2h)7.48$$

Where:

V	=	Volume of the tank in gallons
Pi	=	7/22 or 3.14
r	=	The radius from table in feet
h	=	The height of material in feet

© Copyright 1994 - OHM Remediation Services Corp.

VOLUMES FOR Cylindrical TANKS

h = segment height; D = sphere diameter

h/D	Segment vol. / D^3	Segment vol. / Sphere vol.	h/D	Segment vol. / D^3	Segment vol. / Sphere vol.	h/D	Segment vol. / D^3	Segment vol. / Sphere vol.	h/D	Segment vol. / D^3	Segment vol. / Sphere vol.
0.01	0.000156	0.000298	0.16	0.035923	0.064608	0.31	0.119756	0.228718	0.41	0.191677	0.346458
.02	.000619	.001184	.17	.040251	.074674	.32	.126534	.241664	.42	.199503	.361024
.03	.001385	.002646	.18	.044787	.085536	.33	.133426	.254826	.43	.207188	.375686
.04	.002446	.004672	.19	.049522	.094582	.34	.140425	.268192	.44	.214801	.410432
.05	.003796	.007250	.20	.054454	.104000	.35	.147524	.281750	.45	.222340	.425250
.06	.005429	.010368	.21	.059573	.113778	.36	.154717	.295488	.46	.230450	.440128
.07	.007338	.014014	.22	.064875	.123904	.37	.161998	.309394	.47	.238265	.455054
.08	.009517	.018176	.23	.070355	.134366	.38	.169361	.323456	.48	.246099	.470016
.09	.011960	.022842	.24	.076001	.145152	.39	.176799	.337662	.49	.253946	.485002
.10	.014661	.028000	.25	.081812	.156250	.40	.184306	.352000	.50	.261799	.500000
.11	.017613	.033636	.26	.087780	.167648						
.12	.020809	.039744	.27	.093900	.179334						
.13	.024246	.046306	.28	.100160	.191296						
.14	.027914	.053312	.29	.106560	.203522						
.15	.031809	.060750	.30	.113097	.216000						

*Given the segment height h and the sphere diameter D, first form the ratio h/D, and find from the table the value of (segment volume/D^3); then multiply this latter value by D^3, that is: (segment volume/D^3) $\times$ D^3 = segment volume.

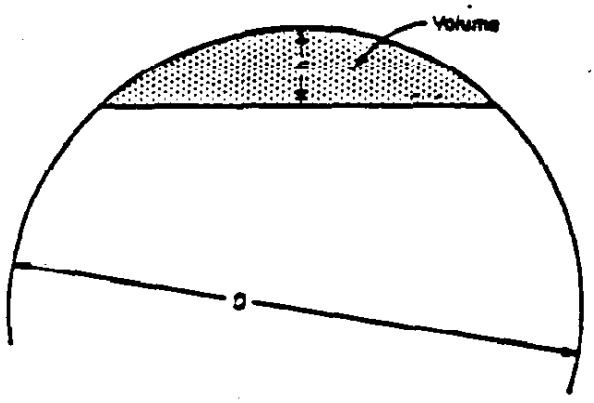

Nomograph

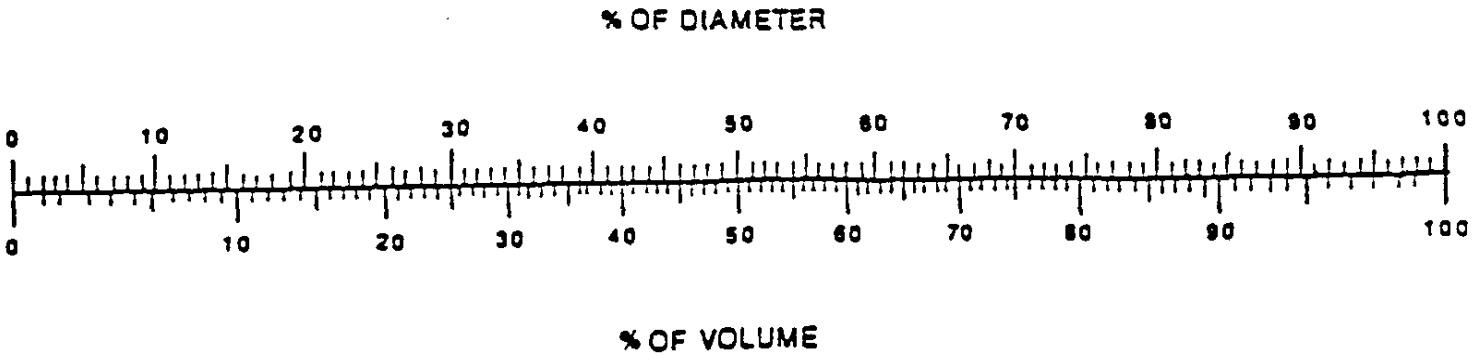

7.4.2.2 Horizontal Tanks

7.4.2.2.1 After the total capacity of a tank is known, the next step is to determine its contents when partially full, (see Table 7.1). The depth of material is determined as a percentage of the tank diameter and the corresponding percentage of the total tank volume is read from the scale.

EXAMPLE HORIZONTAL TANKS

7.4.2.2.2 To find the capacity of a tank, find the diameter of the tank on Table 7.1 and multiply it by the length of the tank in feet. This will give you the capacity in gallons

$$\frac{\text{Layer Measurement (Inches)}}{\text{Tank Diameter (Inches)}} \times 100 = \text{Percent Diameter}$$

Note: When more than one layer is present, the percent diameter is calculated by determining the difference.

7.4.2.2.3 When 2 layers are present the layer measurement in inches is the total measurement of the two layers (layer 1 plus layer 2). The calculated volume (in gal.) will reflect the combination of layer 1 and layer 2. Subtract the total gallons previously calculated for layer 1 from the total gallons calculated from the combination of layer 1 and layer 2. This will leave the gallons for layer 2 as the remainder.

Percent of Volume x Tank Capacity = gallons

7.5 Sampling Methods

7.5.1 There are several sampling devices for sampling liquids in tanks: bacon bomb, pond sampler, PVC pipe sampler, sludge judge, and dip tube. All of the above mentioned sampling devices will provide a depth based composite of the liquid with the exception of the pond sampling device. This device is utilized when there is minimal liquid at the bottom of a tank and a sample needs to be collected (remember that one inch of material in the bottom of a tank can be a substantial amount - depending on the size of the tank).

© Copyright 1994 - OHM Remediation Services Corp.

7.5.2 There are also several types of sludge/solids sampling devices for use in tanks: PVC pipe sampler, sludge judge, pond sampler, floor scraper, and a shovel. The PVC pipe sampler and the sludge judge can provide a depth based composite. However the sludge judge is only useful for lighter sludge. The pond sampler or a shovel are useful when minimal solid material is at the bottom of a tank. The floor scraper is useful when it is necessary to scrape scale from an otherwise empty tank, in order to collect a sample. The determination of "empty" in regards to tanks needs to be made prior to collection of tank samples. This determination can vary from project to project depending on what the goals of the project are. For example: A tank is empty except for rust scale on the insides of the tank. It may be necessary to scrape the rust scale for a sample if one of the concerns is to pressure wash the tanks. The information gathered from the rust scale sample may determine what waste stream the rust scale goes into when the tank is scraped out and what waste stream the rinsate (from pressure washing) goes into. Consult the site supervisor and/or the project manager prior to sample collection.

8.0 EQUIPMENT

8.1 Generally, the materials required to perform tank sampling include:

* Sample gloves
* Sample containers
* 100 ft. tape measure
* PID unit, LEL Meter, Drager tube set-up
* Sample labels
* Materials for decontamination of sampling equipment.
* Field log book
* Marking pens
* Tank sampling data sheets

© Copyright 1994 - OHM Remediation Services Corp.

* Sampling device - Several types are usable (See CSAP for specific project)

8.2 The preceding list is general, specific requirements will be discussed in the site-specific sampling and analytical plan.

9.0 ATTACHMENTS

None

© Copyright 1994 - OHM Remediation Services Corp.

OHM Corporation

QUALITY POLICY AND PROCEDURE APPROVAL AND REVISION RECORD

Document # QP-608	Title Drum Sampling

APPROVAL

Name	Title	Signature	Date
Willis Moody	Super. QA/QC		12/17/93
G. J. Herzig	Mngr. Field Tech.		12/17/93
Terry Sole	Dir. Tech. Svcs.		12/17/93

REVISION RECORD

Ltr.	Date	Change Description	Initials						
1		issue	-	-	-	-	-	-	-
2									
3									
4									
5									
6									
7									
8									
9									
10									
11									
12									
13									
14									
15									

STANDARD OPERATING PROCEDURES

Title: Drum Sampling **Document #:** QP-608

Date Issued: January 17, 1994 **Rev:** 00 **Date:** December 17, 1993

1.0 PURPOSE

1.1 To provide general reference information for use in planning and implementing sampling programs that involve the moving, opening and sampling of closed containers (drums) at OHM project sites.

1.2 To provide guidelines for primary and secondary staging of drums.

1.3 To provide OHM standard procedures for opening containers.

1.4 To provide guidelines for the sampling of containerized materials.

1.5 To discuss site organization and assigned responsibilities.

1.6 To provide information on protective clothing, worker protection and other safety related issues.

2.0 SCOPE

2.1 This guideline is applicable to opening and sampling of closed containers (120 gallon or less) on OHM project sites. Bulk tanks such as railroad tank cars, large above- and below-ground tanks (with a capacity of more than 120 gallons), and tank trailers are not considered in this procedure.

© Copyright 1993 OHM Remediation Services Corp.

3.0 RELATED DOCUMENTS

3.1 Cassis, Jo, et al., 1985. Guidance Document for Cleanup of Surface Tank and Drum Sites. Prepared for Office of Emergency and Remedial Response, USEPA, Washington, D.C. under Contract No. 68-01-6930.

3.2 Hazardous Waste Operations and Emergency Response, December 1988. IT Corporation, Knoxville, TN.

3.3 Martin, F.M., Lippitt, J.M., Prothero, T.G., 1987. Hazardous Waste Handbook for Health and Safety, Butterworth Publishers, p. 167-177.

3.4 NIOSH, OSHA, USCG, & USEPA, October 1985. Occupational Safety and Health Guidance Manual for Hazardous Waste Site Activities.

3.5 NUS Corporation, 1983. Operating Guidelines Manual.

3.6 OHM Compatibility Manual, 1992.

3.7 USEPA, 1986. Drum Handling Practices at Hazardous Waste Sites, EPA/60-0/2-86/013.

3.8 US Code of Federal Regulations 29 CFR 1910 and 1926 (OSHA)

3.9 US Code of Federal Regulations 49 CFR 265 (EPA)

4.0 GENERAL INFORMATION

4.1 Location of containers on a hazardous waste site

4.1.1 Typically, waste is shipped to sites in 55-gallon drums on trucks. About 60 to 80 drums are delivered from a given load, depending on the weight of the load. Usually there is some type of pattern to the method that the drums were staged on site. Markings on the drums may assist in determination of these patterns. Frequently, the only indication that a group of drums is related will be the color, size, or type of drum. During the initial site inspection, one should look for distinguishing features in an attempt to define the different lots or patterns of drums on the site. Often the trade name, chemical name, or empirical formula will be written on the drum. Another distinguishing feature would be drums of exotic metal such as aluminum, nickel, Monel, stainless steel, etc. A manufacturing facility will use a specified

© Copyright 1993 OHM Remediation Services Corp.

DOT coded drum, a strange drum size, or a drum with an unusual configuration or adaptation for a particular process line (center of drum head fill bung, double-sided fill/vent bungs, etc.).

4.1.2 At almost every site that has been receiving waste, there is an isolated group of containers. These containers were most likely segregated because of their reactive nature or containing highly hazardous materials. Approach these with care and try to determine why they were segregated.

4.1.3 In any lot of drums there is sometimes encountered an unusual or out-of-place container. This oddball container will not fit the pattern, color, size, etc., of those around it (e.g., it may be the only distended drum among undistended drums or a lined drum among unlined drums).

4.2 Strict adherence to safety precautions will occur during drum handling, opening and sampling. Site Health and Safety Plan procedures and requirements will supersede this document and will be adhered to during field activities on-site.

4.3 Risks

4.3.1 Four basic risks are involved in moving and opening closed containers:

4.3.1.1 Exposure of personnel to toxic materials

4.3.1.2 Fire
4.3.1.3 Explosion

4.3.1.4 Hazardous reactions (i.e. rapid polymerization reactions)

4.3.2 Exposure of personnel to toxic materials.

4.3.2.1 The first risk can be reasonably eliminated through the use of proper skin and respiratory protection equipment. The use of level B protection with splash guard (i.e. Tyvek and Saran suits with face shield) acceptably reduces the risk of a worker being injured by toxic vapors, mists, or splashes.

4.3.3 Fire

4.3.3.1 In the same way, standard fire prevention procedures can be used to reduce the fire hazard through the use of detector instruments

© Copyright 1993 OHM Remediation Services Corp.

and proper equipment. These include the use of non-sparking tools and intrinsically safe radios, pumps, and other equipments as well as the staging of fire fighting equipment and the elimination of any other possible ignition sources. Piles of sand and lime (for neutralization and suffocation) will be on hand at the site in case of a fire.

4.3.4 Explosion

4.3.4.1 The explosive risk however, is not as easily handled, and thus is the primary consideration in any container-opening operation. Even if no solid evidence of the presence of explosives is found during the preliminary data collection, one can never be certain that explosives have not been disposed of at the site. In order to provide the same reasonable level of protection against this risk as against toxic exposure and fire, a very cautious approach, such as the one recommended in this guideline, should be used (see section 7.6.2, Drums Containing Explosive or Shock Sensitive Waste).

4.3.5 Hazardous Reactions

4.3.5.1 The risk of a hazardous reaction is another primary consideration in any container opening operation. Since a reaction can be triggered by a wide range of possibilities, it is not something that is always preventable. In order to provide the same reasonable level of protection against this risk as against toxic exposure and hazardous reactions, a very cautious approach should be used. An example of a hazardous reaction would be the self-polymerization of nylon or styrene precursors. Both can generate heat, fumes and can explosively pressurize a drum.

4.4 Scenarios involving drums encountered in the field may include drums that are:

- Unmarked
- Mislabeled
- Bulging (pressurized)
- Buried
- Deteriorated (physically unsound)
- Leaking

4.4.1 Drum condition and contents will be the factors which will determine the general the drum handling and sampling procedures.

© Copyright 1993 OHM Remediation Services Corp.

4.5 Consult OSHA regulations (29 CFR Sections 1910 and 1926) for established general requirements and standards for storing, containing, and handling chemicals and containers, and for maintaining equipment used for handling materials.

4.6 Consult EPA regulations (49 CFR 265) for requirements pertaining to the types of containers, maintenance of containers and containment structures, and design and maintenance of storage areas.

5.0 DEFINITIONS

5.1 Air Reactive Wastes - Some chemicals, such as white phosphorus and some of the metallic hydrides, react with the oxygen in the air and can start burning or at least producing considerable amounts of heat and may possibly release toxic or flammable vapors.

5.2 Compatibility Testing - A series of tests performed on individual drum samples where the object of the testing is to find those drums which have similar and potentially compatible contents. After further testing the contents of these drums would be mixed together to form a larger single waste stream for disposal purposes.

5.3 Container - Defined as any drum, bottle, can, bag, etc., with a capacity of 120 gallons (450 liters) or less.

5.3 Dosimeter - A portable, transistorized survey meter that can be used for radiation monitoring purposes and/or contamination measurements.

5.4 Exotic Metal Drums - (i.e. aluminum, nickel, stainless steel, or other unusual metals). Very expensive drums that usually contain an extremely dangerous material.

5.5 Glass Thief - A glass tube 4 feet long and 3/4 inches in diameter, used for taking samples from drums. The tube is usually broken up and disposed of in the drum following sampling.

5.6 LEL - (Lower explosive limit) An air monitoring device can test the surrounding air for sufficient oxygen content for life support and/or the presence of combustible gases or vapors which may pose a potential flammability hazard. The lower explosive limit is defined as the minimum concentration of a particular combustible gas in the air which can be ignited. The upper explosive limit is defined as the maximum concentration that can be ignited.

© Copyright 1993 OHM Remediation Services Corp.

5.7 Laboratory Packs - Such drums are commonly used for disposal of expired chemicals and process samples from laboratories, hospitals and similar institutions. Bottles in the laboratory pack may contain incompatible materials and may not be packed in absorbent material. They may contain radioisotopes, shock sensitive, highly volatile, highly corrosive, or very toxic exotic chemicals. Laboratory packs have been the primary ignition sources for fires at some hazardous waste sites.

5.8 Monitox - A portable warning device used for detecting specific toxic gases found in the surrounding air (i.e. H_2S, HCl, Cl, HCN and $COCl_2$).

5.9 PID - (photoionization detector) A portable air-monitoring instrument used to detect organic vapors. The PID does not distinguish between different types of vapors or tell if more than one vapor is present.

5.10 Polyethylene or PVC-lined Drums - Often contains strong acids or bases. If the lining is punctured, the substance usually corrodes the steel, resulting in a significant leak or spill.

5.11 Shock Sensitives - A chemical which may undergo a very rapid chemical transformation, with the simultaneous production of large quantities of heat and gases, if introduced to shock (i.e. friction).

5.12 Single-Walled Drums Used as a Pressure Vessel - These drums have fittings for both product filling and placement of an inert gas, such as nitrogen. Such drums may contain reactive, flammable, or explosive substances.

5.13 Vapor Control - The use of an LEL, PID, Monitox, or any other air monitoring device to assure the quality of air meets all safety requirements.

5.14 Waste Blending Test - A waste blending test is done on sample materials from drums that were found to be similar and potentially compatible with each other. The sample materials are proportionally and sequentially blended with each other and observations and measurements are made during and after the blending process to determine if any potentially hazardous reactions are occurring (i.e., temperature rise, outgassing occurring or other reaction).

5.14 Water Reactive Wastes - Some chemicals will react violently with water on contact or through contact with moisture in the air while others may give off toxic or flammable gasses. Sodium or potassium metal react violently with water while calcium carbide reacts to produce a flammable gas (acetylene).

© Copyright 1993 OHM Remediation Services Corp.

6.0 RESPONSIBILITIES

6.1 Manager, Field Analytical Services

6.1.1 The manager of field analytical services will:

6.1.1.1 Act as project coordinator for field technical personnel

6.1.1.2 Review and update site sampling and analytical plans as required.

6.1.1.3 Determine which procedures and methods will be utilized on-site

6.2 Project Chemist

6.2.1 The project Chemist will:

6.2.1.1 Manage the mobile laboratory or the shift so that the data generated meets the required levels of certification

6.2.1.2 Implement sample acquisition numbering system

6.3 Chemists

6.3.1 The chemists will:

6.3.1.1 Carry out compatibility tests

6.3.1.2 Carry out approved analytical procedures and maintain sample analysis tracking forms

6.4 Sample Technicians

6.4.1 The sampling technicians will be responsible for:

6.4.1.1 Carrying out all drum sampling as per the site CSAP

6.4.1.2 Generate trip blanks, equipment blanks, and acquire replicate samples as per the CSAP

6.4.1.3 Record all field data in Log Books or on drum logs forms

© Copyright 1993 OHM Remediation Services Corp.

6.4.1.4 Fill out COC forms.

6.5 Procedure Modifications

6.5.1 The responsibility and authority for modifying this SOP (QP-608) lies with the Plans and Procedures Group and the management of the Midwest Region Tech. Svcs. Dept.

7.0 PROCEDURE

7.1 Introduction

7.1.1 The guidance presented is based on field experience in working with containers on uncontrolled hazardous substance sites and on information contained in USEPA and other government agency publications. It will be evident that in many cases hard and fast rules cannot be given, and professional judgement is required because uncontrolled variables are involved. For example, no one can be absolutely certain of any assessment of the potential contents of a container. Labels cannot be absolutely trusted; only educated guesses can be made by a thorough review of all available background data, such as potential sources of the wastes. The following topics will be covered in the paragraphs to follow:

7.1.1.1 Initial inspection of drums

7.1.1.2 Handling

7.1.1.3 Staging

7.1.1.4 Remote opening of drums

7.1.1.5 Second inspection of drums

7.1.1.6 Numbering and mapping of drums

7.1.1.7 Sampling of drums

7.1.1.8 Characterization and test blending

7.1.2 Figure 7.1-1 demonstrates a flow chart for drum handling on a typical hazardous waste project.

© Copyright 1993 OHM Remediation Services Corp.

7.1.3 During many drum projects, several phases will be in progress simultaneously. Air monitoring, dust control, and organic vapor control operations should be in progress throughout the course of the project.

7.2 Initial Inspection

7.2.1 Prior to physically handling a drum or other container, the following preliminary classifications checklist must be reviewed by a chemist and each response noted in a field notebook:

7.2.1.1 Are the drums radioactive?

7.2.1.2 Do the drums exhibit leakage or deterioration, i.e., is it unsound?

7.2.1.3 Do the drums exhibit apparent internal pressure?

7.2.1.4 Do the drums contain markings which would indicate that the contents are potentially explosive?

7.2.1.5 Are the drums of special construction (i.e. Nickel, Stainless Steel, or Corrugated drums)

7.2.2 Drums which are determined to be possible radioactive, shock sensitive, or reactive will be segregated to a special handling area. The results of the preliminary classification checklist will dictate what procedures are followed in the handling, opening, and sampling of a drum.

7.2.2.1 Overpacking Leakers

7.2.2.1.1 During the initial inspection, and beyond, personnel should watch for leaking drums. These must be overpacked promptly, and the spill should be cleaned up immediately.

7.2.3 Gas Cylinders

7.2.3.1 Gas cylinders, when encountered, should be stored and disposed of on a special case by case basis depending on the integrity of the cylinders and the type of substance they may contain.

© Copyright 1993 OHM Remediation Services Corp.

7.2.4 Air Monitoring

7.2.4.1 Preliminary surveys at project sites for organic vapors, explosivity, and radiation should be completed for all drum projects. This survey will aid in identifying site specific hazards and development of work zones. In addition, this is how many of the drums which require special handling are identified.

7.2.4.2 Radiological Survey

7.2.4.2.1 The personnel conducting radiological surveys will have a basic knowledge of the radiological survey meter used and of radiation types.

7.2.4.2.2 There are three types of radiation which might be encountered in the field:

Alpha (α), which is stopped by clothing or a sheet of paper. While alpha radiation is the least penetrating type, it can be very dangerous if alpha-emitting radionuclides are ingested, inhaled, or enter the body through a puncture wound.

Beta (β), which is stopped by the steel wall of a drum.

Gamma (γ) or X-ray, which is only stopped by lead shielding, thick concrete, or steel.

7.2.4.2.3 Ionizing Radiation Survey Meters

The survey meters OHM uses measure radiation in units of millirems per hour (mr/hr). The dose that one is exposed to is calculated by multiplying the hours of exposure by the average measured level of exposure as determined by a calibrated radiation meter. The specified survey meter as found in the equipment list in Section 8.0 has internally mounted twin detectors. The survey meter shall be checked for proper function by use of a low level non-regulated source before each day's usage of the meter. Record the results of the meter check in the sampler's daily notes.

© Copyright 1993 OHM Remediation Services Corp.

FIGURE 7-1

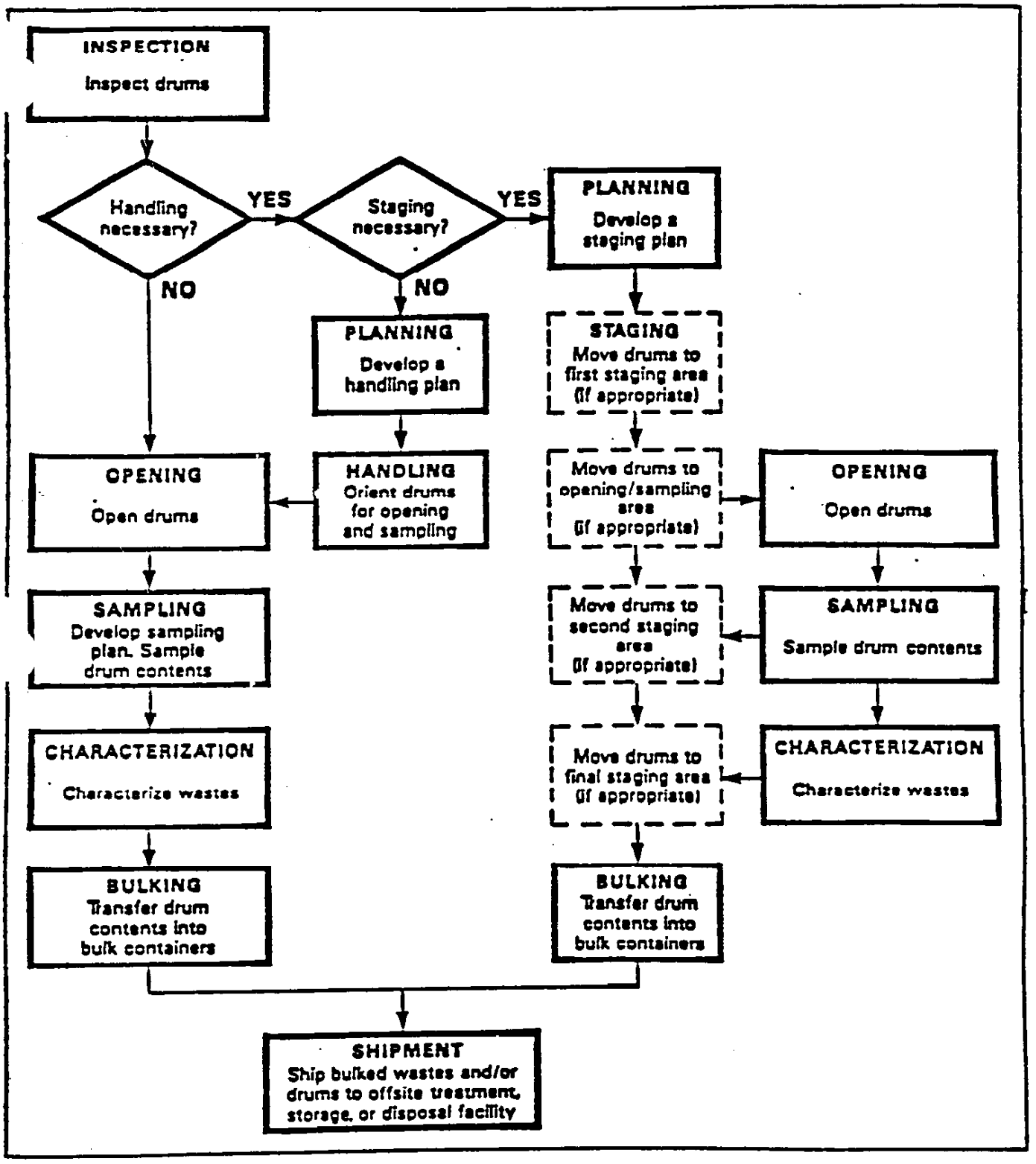

Flow Chart for Drum Handling. (Dashed boxes indicate optional steps. Number of staging areas necessary is site specific.)

7.2.4.2.4 Background Level for Gamma Radiation

The background level for gamma radiation is between 0.008 and 0.02 mr/hr. Occasionally, the needle will briefly jump above this level, but it should not stay there.

7.2.4.2.5 Radiation Areas Defined

The Nuclear Regulatory Commission defines a radiation area to be one in which the radiation levels are at 5 mr/hr or greater or an area where one can accumulate 100 millirems of exposure in 5 days of normal work in the area. A high-radiation area has radiation at levels greater than 100 mr/hr.

When abnormally high readings are obtained, ranging from 0.2 to 2.0 mr/hr, one must first ascertain that this is not caused by a malfunction in the unit. If the readings are not caused by a malfunction one should follow the guidelines in Tble 7.2-1 below.

Table 7.2-1
Dosimeter Readings

Reading	Action
< or = 2 mrem/hr	Radiation above background levels (0.01-0.02 mrem/hr) signifies the possible presence of radiation sources. Continue investigation with caution.
> 2 mrem/hr	Potential radiation hazard. Contact Site Health and Safety Officer and Site Supervisor immediately.

7.2.4.3 Other air monitoring includes scans with a Photoionization Detector (PID), Lower Explosion Limit (LEL) meter, and cyanide and sulfide monitoxes. Since the majority (if not all) of the drums should be unopened at the time of the initial survey, this scan is typically performed over the tops of the sealed drums. Special Handling drums are sometimes identified during this scan when PID or LEL readings are abnormally high or when cyanide and/or sulfide monitox alarms sound. Such drums will need to be segregated to a special handling area.

© Copyright 1993 OHM Remediation Services Corp.

7.3 The handling, movements and transport of drums and other containers should be by use of mechanical equipment only; no drums should be handled manually. Remote drum handling equipment may consist of a grappler equipped backhoe or front-end loader. Drum transportation should be with front-end loaders or fork lifts with modified carrying platforms. Portions of equipment that contact drums or canisters should be constructed of non-ferrous metals or contact portions should be coated or lined to preclude spark generation. Handling and transport equipment must be equipped with full frontal and side splash and explosion shields. Class ABC fire extinguishers will be fitted to the body of each piece of equipment.

7.3.1 Personnel involved in handling and transporting containerized waste will work in teams containing no fewer than two people. Visual contact will be maintained between members of the working team at all times. All team members will be able to communicate between themselves and with the Site Health and Safety Officer by intrinsically safe two-way radios at all times on the work site.

7.3.2 Whenever possible, drums or other containers to be sampled should be opened and sampled in place to minimize handling. However, when drums are stacked or are close together, they may have to be moved to prevent sympathetic detonation of, or chemical reaction with, other drums around the one being opened. The main criterion is distance to other drums--a reasonable distance should be maintained to keep the drum to be opened segregated from the others.

7.3.3 Leaking or Deteriorated Drums

7.3.3.1 The contents of drums that exhibit leakage or apparent deterioration such that movement will cause rupture (determined by the HSO) must immediately be transferred to a repack drum. Equipment, including transfer pumps used in the repack operation must be of explosion-proof construction.

7.3.3.2 Leaking drums containing sludges or semi-solids, drums that are structurally sound but which are open and contain liquid or solid waste, and drums which are deteriorated but can be moved without rupture must be placed in overpack containers. Make certain that representative samples are obtained from overpacked drums. Sample the actual drum, not material that has leaked from the drum into the overpack.

© Copyright 1993 OHM Remediation Services Corp.

7.3.4 Bulging Drums

7.3.4.1 Drums which potentially may be under internal pressure, as evidenced by bulging, must be sampled in place. Extreme care shall be exercised when working with and adjacent to potentially pressurized drums.

7.3.4.2 Should movement of a pressurized drum be unavoidable, handle only by a grappler unit constructed for explosive containment. The bulging drum should be moved only as far as necessary to allow seating on firm ground or it should be carefully overpacked.

7.4 Primary Staging of Drums

7.4.1 A staging configuration must allow the samplers reasonable access to each drum for inspection, sampling, and overpacking, if necessary, while economizing on space. Drums are staged in rows, two wide, with isle space between rows. According to the Occupational Safety and Health Guidance Manual for Hazardous Waste Site Activities, "In all staging areas, stage the drums two wide in two rows, per area, and space these rows 7 to 8 feet apart to enable movement of the drum handling equipment." Figure 7.4-1 demonstrates the possible staging areas at a hazardous waste site.

7.5 Drum Opening

7.5.1 Drum opening operations are completed by remote means prior to the collection of samples. This provides the sampler a means for collecting a sample in an otherwise sealed container.

7.5.2 Opening Area

7.5.2.1 The drum opening area should be physically separated from the drum removal and drum staging operations. However, when drums must be opened after they are already in a staging area, personnel should be a minimum of 50 feet from the drum opening area. When drum opening can be performed at an area other than the staging area, there should be adequate distance between the drum opening and the removal and staging operations to prevent a chain reaction or fire during the drum opening procedure.

© Copyright 1993 OHM Remediation Services Corp.

7.5.3 Caterpillar 215 Grappler

7.5.3.1 Drum opening is normally accomplished with a Caterpillar 215 grappler using a brass-tipped punch. A remote drum punching unit may also be used on smaller drum projects. At all times the staging area should be clear of personnel on the ground during punching operations. Extreme caution should always be taken when drum punching/opening is being performed. **AT NO TIME SHOULD DRUMS BE PUNCHED MANUALLY BY HAND USING HAND HELD TOOLS!** Drums that have been placed inside overpack drums upside down will need to be punched to obtain sample(s) of both liquids in them and any settled solids.

7.5.4 OHM procedures prohibit the opening of drums containing unknown materials by hand. Employees found to be opening drums by hand will face disciplinary action. The drums will be opened by using a remote air operated punch or by the method described above.

7.5.5 Small containers, like drums, are not to be opened by hand at any time. OHM has remote opening devices specifically designed for the opening of small containers. **USE THEM!**

7.5.6 Containers that are inside warehouses, basements, or other buildings should be moved outside before they are opened. Opening and sampling of containers inside a building should only be done when there are no areas outside of the building that could be safely or physically used for these purposes.

7.5.6.1 If it is determined that opening and sampling of containers must be done inside of a building, then the following minimum requirements must be met:

7.5.6.1.1 Adequate ventilation must be provided.

7.5.6.1.2 Containment must be in place around drum opening and sampling area.

7.5.6.1.3 A,B,C type fire extinguishers must be in place.

7.5.6.1.4 Sand and mechanized equipment for spreading the sand in case of a fire or reaction must be present when drum opening operations take place.

© Copyright 1993 OHM Remediation Services Corp.

FIGURE 7-2

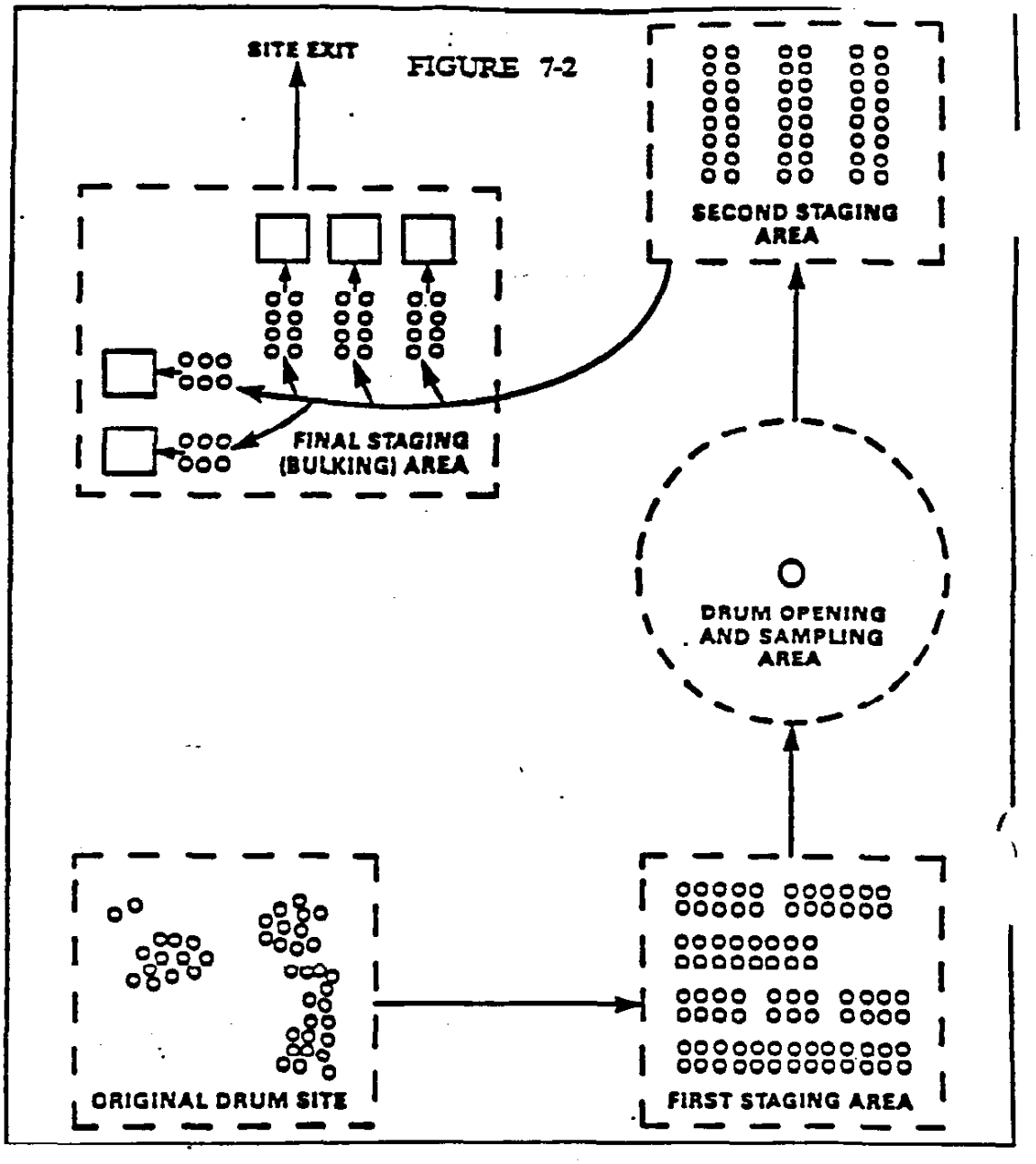

Possible Staging Areas at a Hazardous Waste Site.

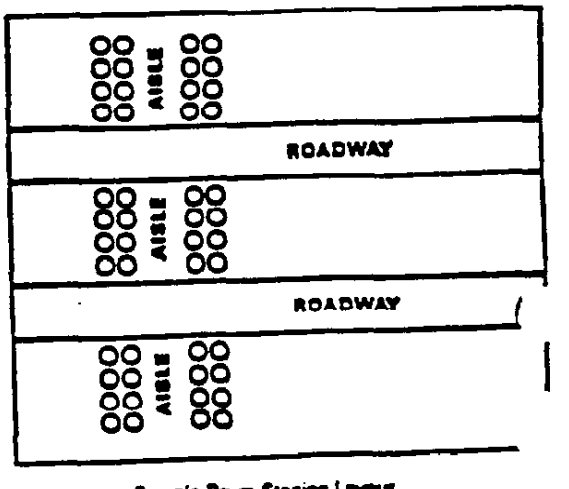

Sample Drum Staging Layout.
Source: References (1).

7.5.6.2 Consult the site specific Health and Safety Plan and with the regional Health and Safety Department. Additional information may be found in the site work plan.

7.6 Second Inspection

7.6.1 After the drums have been staged and opened, a second inspection of the drums is required. During the initial inspection, the drums would have been sealed and only inspection of the outside of the drums was possible. Since the drums are now open, visual observations of the drum contents will aid in locating drums that will require special handling.

7.6.2 Special handling techniques are required for containers which may expose personnel to particularly hazardous conditions. These techniques and techniques for recognition of special handling drums are described in general below, although site-specific conditions may require the development of specialized methods for handling of special handling drums. The following are considered to problem containers:

7.6.2.1 Drums Containing Biohazards

7.6.2.2 Drums Containing Explosive or Shock Sensitive Waste

7.6.2.3 Drums Containing Radioactive Waste

7.6.2.4 Packaged Laboratory Wastes (Laboratory Packs)

7.6.2.5 Air Reactive Wastes (in drums)

7.6.3 Drums Containing Biohazards

7.6.3.1 A biohazard is defined by the Biohazards Committee of the American Industrial Hygiene Association (AIHA), is "an agent that is biological in nature, capable of self-reproduction, and has the capacity to produce deleterious effects upon other biological organisms, particularly humans." Biological agents or substances which could be biohazardous substances, are but not limited to the following:

7.6.3.1.1 Infectious or parasitic agents

© Copyright 1993 OHM Remediation Services Corp.

7.6.3.1.2 Non-infectious microorganisms (such as some fungi, yeasts and algae)

7.6.3.1.3 Plants and plant products

7.6.3.1.4 Animals and animal products which can cause occupational disease

7.6.3.2 Recognition is the key to avoiding disease contaminated biological waste. Be aware that this may take the form of cultured animal cells, infected clinical specimens (tissues, fluids, etc.), or tissues from experimental animals (including animal dander). Open drums should be examined for evidence of biological material such as:

7.6.3.2.1 Gauze

7.6.3.2.2 Hypodermic syringes

7.6.3.2.3 Petri dishes

7.6.3.2.4 Cultures

7.6.3.2.5 Blood

7.6.3.2.6 Animal tissues

7.6.3.2.7 Waste from orthopedic casts (may be gray, crumbly solids resembling a type of insulation).

7.6.3.3 Biological waste that has been prepared for incineration or for autoclaving may be packaged in **red plastic bags** or may be contained in plastic bags that are marked with the universal biohazard symbol (one ring with three interlocking "C"-shaped rings on top). Biohazards such as research bacterial cultures may be sent through the mail if they are packaged in a mailing tube. It is conceivable that either type of packaging could be found on a hazardous waste project.

7.6.3.4 If a biohazard or possible biohazard is identified, seal the drum and immediately notify the Site Safety Officer and the Site Supervisor.

© Copyright 1993 OHM Remediation Services Corp.

7.6.4 Drums Containing Explosive or Shock Sensitive Waste

7.6.4.1 If drums containing wastes that have been identified by sampling, or are suspected by visual examination to be explosive in nature are found, the Project Manager and the HSO must be notified immediately, before the drums are handled in any way.

7.6.4.2 If the Project Manager and the HSO approve handling of these drums, they shall be handled with extreme caution. Initial handling shall be by a grappler unit constructed for explosive containment. Drums shall be palletized prior to transport to a high hazard interim storage and disposal area.

7.6.4.3 If at any time during remedial activities, an explosive, pursuant to provisions of Title 18, U.S. Code, Chapter 40 (Importation, Manufacturer, Distribution, and Storage of Explosive Materials, 1975 Explosives List) is identified, it should be secured and the appropriate state and federal agencies notified.

7.6.4.4 Identification of an explosive substance during the course of a remedial action is usually based on the experience of the on-site personnel. Potentially explosive material usually may be identified by their physical characteristics such as texture, color density, etc. as well as the way they are packaged. Most explosives are solids. In some cases they are packaged in water-tight containers to exclude water while in other cases they are packaged wet to preclude explosion.

7.6.4.5 Prior to handling or transporting drums containing explosive wastes, personnel working in the area shall be removed to a safe distance (as determined by the HSO). Continuous contact with the communication base shall be maintained until handling or transporting operations are complete. An audible siren signal system, shall be used to signify the commencement and completion of explosive waste handling or transporting activities.

7.6.5 Drums Containing Radioactive Waste

7.6.5.1 After the containers are opened, another radiological survey will be conducted.

7.6.5.2 Handling and Transporting Radioactive Waste Drums

© Copyright 1993 OHM Remediation Services Corp.

7.6.5.2.1 Drums containing radioactive wastes shall not be handled until radiation levels have been determined by a field survey which is recorded in a field notebook. The survey shall include background levels, direct gamma readings and laboratory analysis of drum surface wipe samples.

7.6.5.2.2 Depending on the level of radiation encountered, handling and transport may require special shielding devices to protect personnel. Following handling and transport, equipment used shall be surveyed by the HSO and decontaminated to background levels prior to recommencing work. Surveys shall also be made of the ground surface in the vicinity of original drum storage to identify potential soil contamination by spilled or leaked radioactive waste. Prior to recommencing work in the area, radioactive soil areas shall be isolated to prevent tracking of radioactive contaminants about the site, and workers who entered the area should have their gloves and boots surveyed for radiation.

7.6.6 Packaged Laboratory Wastes (Laboratory Packs)

7.6.6.1 If drums known or suspected of containing discarded laboratory chemicals, reagents or other potentially dangerous materials in small volume, or individual containers are found, the Project Manager is to be notified immediately, before the drums or containers are moved or opened.

7.6.6.2 Lab pack drums are easily identified by the presence of vermiculite or other absorbent type packaging material. If a drum contains such material, there is a good possibility that the drum is a lab pack drum. Further investigation may reveal that the drum also contains smaller containers inside such as:

7.6.6.2.1 Sample jars

7.6.6.2.2 Metal shipping containers

7.6.6.2.3 Specially sealed packages

7.6.6.2.4 Sealed 5 gallon buckets

© Copyright 1993 OHM Remediation Services Corp.

7.6.6.3 If the Project Manager and the HSO approve the handling of these containers, they shall be handled with extreme caution. Until otherwise categorized, they shall be considered to be explosive or shock-sensitive wastes. Initial handling shall be by a grappler unit constructed for explosive containment. Drums shall be palletized and overpacked, if required, prior to transport to a staging area where sorting, identification, repacking and/or stabilization can be done.

7.6.6.4 Prior to handling or transporting Laboratory Packs from the existing drum area, personnel working in the immediate area shall be removed to a safe distance. Continuous contact with the communication base shall be maintained until handling or transporting operations are complete. An audible siren signal system, similar to that employed in conventional blasting operations will be used to signify the commencement and cessation of Laboratory Pack handling or transporting activities.

7.6.7 Air Reactive Wastes

7.6.7.1 If the presence of air reactive substance is verified or even suspected, the material should be immediately segregated and transported to a separate high hazard interim storage and disposal area.

7.6.7.2 Air reactive wastes may be discovered during opening or sampling operations. Air reactive substances are routinely packaged in special containers or packages that keep the material from making contact with the air. They may be stored under kerosene or some other liquid to minimize air contact. They may also be found in sealed ampoules, corrugated drums, stainless steel canisters, sealed aluminum containers or specially lined drums.

7.7 Numbering and Mapping

7.7.1 Accurate numbering is critical. Mistakes in numbering, such as missing numbers or double numbering, are minimized by numbering after primary staging. (It is highly recommended that drums are not numbered prior to staging.) To avoid problems, empty containers (not removed from the staging area prior to sampling) should be numbered and recorded on drum inventory logs as empty. **DRUM NUMBERING SHOULD BE STRICTLY NUMERICAL.**

© Copyright 1993 OHM Remediation Services Corp.

7.7.2 Mistakes in numbering occur in most drum sampling projects. In large part mistakes made in numbering have very little consequence until samples have been submitted to the laboratory. It is for this reason that drum numbering and drum mapping must occur before samples are collected.

7.7.3 After the drums in the staging area have been numbered, a drum map is made. The drum map is reviewed for double numbers and missing numbers. Any double numbered drums or missing numbers are corrected in the staging area and on the drum map before any sampling is to be performed in the staging area.

7.8 Sampling

7.8.1 Collection of samples should occur only after the procedures of the previous subsections have been followed. Any container not meeting these requirements will not be sampled until these procedures have been followed.

For example: If a drum is discovered to not have access into it (not remotely opened) , the drum will not be sampled and the senior sampling technologist and the site supervisor will be notified. In this example, the procedures of the previous subsections were not met. Had those procedures been met, there would be access into the drum because the drum would have been remotely opened on a previous occasion. Until access can be made into the drum by remote means, the drum will not be sampled.

7.8.2 The following subsections describe collection of samples from drums which have been inspected, handled, staged, remotely opened, and inspected a second time prior to sampling.

7.8.3 Required Equipment (See also Section 8.0 for more detailed and specific data on the equipment and supplies required)

7.8.3.1 1 12-column book

7.8.3.2 2 OHM record books

7.8.3.3 1 knife, beryllium copper

7.8.3.4 1 bung wrench, Ampco metal

© Copyright 1993 OHM Remediation Services Corp.

7.8.3.5 1 screwdriver, beryllium copper

7.8.3.6 1 scraper, beryllium copper

7.8.3.7 2 pair Wizard cut-resistant glove liners

7.8.3.8 2 1/2 inch drive ratchets, BeCu alloy

7.8.3.9 2 15/16 sockets, BeCu alloy

7.8.3.10 2 polyethylene squirt bottles

7.8.3.11 U.S. EPA Level B personal protective equipment

7.8.3.12 1 radiation survey meter

7.8.3.13 1 H_2S monitox with gas generator

7.8.3.14 1 HCN monitox with gas generator

7.8.4 Expendables per Hundred Drums

7.8.4.1 120 drum log sheets

7.8.4.2 120* 8 oz. jars with Teflon liners

7.8.4.3 200 tongue depressors

7.8.4.4 120 11-mm dip tubes

7.8.4.5 400 pair sample gloves

7.8.4.6 5 mean streaks

7.8.4.7 4 rolls paper towels

7.8.4.8 2 trash bags

7.8.4.9 12 chain-of-custody forms

7.8.4.10 1 Liter of Isopropanol (Pesticide Grade)

© Copyright 1993 OHM Remediation Services Corp.

7.8.4.11 1 Liter of Hexane (Pesticide Grade)

* Varies according to sample volume requirements.

7.8.5 Sampling Procedures

(See sections 7.8.5.3 - 7.8.5.7 for additional information on sampling solids, semisolids and liquids)

7.8.5.1 All drums not in direct contact with ground surface and mechanical equipment should be grounded prior to the commencement of sampling. The reason for grounding of drums which are not in direct contact with ground surface is that a simple static electricity charge transferred to a drum which is not grounded, can cause an explosion or start a fire. A grounding rod driven into the grounds surface, which is attached to copper wire, which is attached to a metal or copper clip, which is clipped to the drum being sampled is an acceptable method of grounding a drum.

7.8.5.2 Once the drum has been grounded, sampling of the drum can begin. The steps to be followed in sampling are as follows:

7.8.5.2.1 Remove the lid of the overpack container or remove the polyethylene sheeting from the top of the drum.

7.8.5.2.2 Record any markings, special drum conditions, and type of opening on the Drum Inventory Log.

7.8.5.2.3 Record the identifying number from the drum onto the Drum Inventory Log. Have a copy (reduced size if necessary) of the drum staging area map and double-check the drum number and location.

7.8.5.2.4 Use a PID (if weather permits) and an L.E.L. meter to collect air monitoring readings from the drum. Record the results on the Drum Inventory Log.

7.8.5.2.5 Insert glass tubing almost to the bottom of the drum or until a solid layer is encountered. About one foot of tubing should extend above the drum.

© Copyright 1993 OHM Remediation Services Corp.

DRUM PRESHIPMENT INSPECTION FORM

OHM Corporation

Drum No.	FOUND	Drums Free of						Labels Present on Drum					Drum No.	FOUND	Drums Free of						Labels Present on Drum				
		Dents		Void Space		Liquids		Hazardous Waste	Non Regulated	DOT	ORM E	Product Code			Dents		Void Space		Liquids		Hazardous Waste	Non Regulated	DOT	ORM E	Product Code
		Y	N	Y	N	Y	N								Y	N	Y	N	Y	N					
Print Inspectors Name								Inspectors Signature					Date								Time				PAGE OF

ATTACHMENT 12

DRUM PRESHIPMENT INSPECTION FORM

DRUM PRESHIPMENT CERTIFICATION FORM

OHM Corporation

Project Name:	Project Location:	Project Number:	Site Phone Number:
Project Manager:	HWC:	HWM:	Site Supervisor:
Generator:	EPA ID Number:	Phone:	Contact:
Transporter:	EPA ID Number:	Phone Number:	Contact:
TSD Facility:		Phone Number:	Contact:
Wastestream to be Shipped:		Date Shipped:	Time Shipped:

	YES	NO	NA	Initials	
Correct manifest document number is in section 11? Manifest Document Number:					
Correct drum count recorded in section 12? Correct Drum Count:					
Correct estimated total volume or weight recorded section 13? Estimate Volume/Weight:					
Correct manifest number on Hazardous Waste Label?					
Are all Drum Numbers Recorded Properly?					
All Drums containing haz waste have Hazardous Waste labels on the upper 1/3 side of the Drum?					
All Drums containing non-haz waste have Non-Regulated Waste label on the upper 1/3 of the Drum?					
Do all Drums have their proper DOT label?					
Is ORM-E label next to the haz waste label or marked in the rectangle of the Haz Waste label?					
Is the Product Code marked on the top and sides of every drum? Product Code:					
Are all drums free of Void Spaces?					
Are all drums free of Liquids?					
Are the drums properly secured in the truck? TAKE PHOTOGRAPH OF LOAD!					

OHM'S HWC				
Please Print Name	Employee Number	Signature	Date	Time

ATTACHMENT 11

DRUM PRESHIPMENT CERTIFICATION FORM

PRESHIPMENT CERTIFICATION FORM

OHM Corporation

Project Name:	Project Location:	Project Number:	Site Phone Number:
Project Manager:	HWC:	HWM:	Site Supervisor:
Generator:	EPA ID Number:	Phone:	Contact:
Transporter:	EPA ID Number:	Phone Number:	Contact:
TSD Facility:		Phone Number:	Contact:
Wastestream to be Shipped:		Date Shipped:	Time Shipped:

CHECK LIST	YES	NO	NA	Initial	Comments
Tractor in acceptable condition? License No:					
Trailer in acceptable condition? License No: DOT ID No:					
Drivers Log up to date and correct? HOURS LEFT TO DRIVE:					
Do you have the right Manifest? [ ] Uniform [ ] State No:					
All sections of the Manifest completed with proper information?					
Transporter signed, printed name, and dated manifest in section 17?					
Generator signed, printed name, and dated manifest in section 16?					
Land Disposal Restriction Notification attached to manifest?					
Drum preshipment Check List Complete?					
Load Secured, Tarp and/or liner in place and good condition?					
Placards legible and in place? Placard Used:					
Bottom Copy Submitted to Generator?					

OHM's HWC				
Please Print Name	Employee Number	Signature	Date	Time

ATTACHMENT 10

PRESHIPMENT CERTIFICATION FORM

7.8.5.2.6 Allow the waste in the drum to reach its natural level in the tube. Cap the top of the sampling tube using a thumb or forefinger.

7.8.5.2.7 Carefully remove the capped tube from the drum and insert the uncapped end in the sample container. Release thumb or forefinger from tube and allow the glass thief to drain completely into the sample container.

7.8.5.2.8 Repeat steps 6 & 7 until the required sample volume has been collected.

7.8.5.2.9 Place the used sampling tube, along with paper towels or waste rags (used to wipe up any spills), into an empty metal barrel marked "sampling waste" for subsequent disposal.

7.8.5.2.10 Close the sample container cover tightly, wipe off with a paper towel and place a label on the sample container.

7.8.5.2.11 Replace the overpack lid or place a plastic cover over the drum/container.

7.8.5.2.12 Measure the sample for radioactivity and record results on the Drum Inventory Log.

7.8.5.2.13 Fill out Chain-of-Custody Record and carefully package samples (if applicable). The finished package will be padlocked or custody-sealed for shipment to the laboratory. The preferred procedure includes the use of a custody seal across filament tape that is wrapped around the package at least twice. The custody seal (paper, plastic, or metal) is folded over and stuck to itself so that the only access to the samples is by cutting the filament tape or breaking the seal to unwrap the tape. The seal is signed before the package is shipped.

7.8.5.2.14 Complete the appropriate shipping forms. Drum samples are always considered to be high-hazard samples.

7.8.5.3 Sampling Solids and Semisolids

7.8.5.3.1 Solids in drums are sampled by scooping the material up with the use of tongue depressors. All reasonable efforts

© Copyright 1993 OHM Remediation Services Corp.

shall be made to obtain sample to a depth of 12 inches or refusal. It is sometimes necessary to sample the material with the use of a trier. This sampling device is often not used however, due to the substantial increase in time necessary to obtain the samples and because of the time required to decontaminate the trier. Tongue depressors will be disposed after each use. Nonexpendable sampling tools must be decontaminated between drums. Sometimes, the material must first be broken up with a non-sparking hammer or hammer and chisel (NOTE: This is the **ONLY** time in which a sampler is allowed to have a hammer and chisel in their hands), or, for rubber-like solids, a piece may need to be cut off with a knife.

7.8.5.4 Sampling Solids Underneath Liquids

7.8.5.4.1 Sludges or solids underneath a liquid may be sampled by forcing the pipette into it. If the sludge does not run out into the jar, shaking the pipette or tapping it against the side of the bottle may loosen the sample. If this fails, one may break the pipette and put the pieces which have the solid in them in the bottle.

7.8.5.4.2 When pipettes are used for sampling, samplers must wear Whizard glove liners (stainless steel mesh glove liners designed to prevent cuts which could be caused by sharp objects such as broken glass tubing).

7.8.5.5 Materials between drum and overpack

7.8.5.5.1 In many drum sampling projects where drums have been overpacked, it is typical to find liquids or solids between the drum and the overpack it is contained in. Sometimes these materials have the same appearance and matrix as the material inside of the drum itself. Sometimes this material can be quite different than the material inside the drum itself.

7.8.5.5.2 Solids

Solids may appear in an overpack, between the drum and the overpack, which is different than the solids or liquids in the drum itself. If these solids appear to be soil, then a notation must be made on the Drum Inventory Log that

© Copyright 1993 OHM Remediation Services Corp.

the material exists between the drum and the overpack. This material does not need sampled. If these solids appear to be something other than soil, then this material must be sampled in accordance with Sampling Solids and Semisolids in section 7.8.3.1. In addition, a notation that the material exists between the drum and the overpack must be made on the Drum Inventory Log.

7.8.5.5.3 Liquids

Liquids may appear in an overpack, between the drum and the overpack, which is different than the solids or liquids in the drum itself. This material must be sampled in accordance with Sampling Procedures in section 7.8.3. In addition, a notation that the material exists between the drum and the overpack must be made on the Drum Inventory Log.

7.8.5.6 Sampling Frozen Drums

7.8.5.6.1 OHM is often faced with the need to collect samples in conditions where the temperature is below 32°F (0°C) and the material inside the drum is partially or completely frozen. In situations where the material in the drum is frozen, a Milwaukee wood bit with an air driven drill or hand drill can be used. An air driven drill or hand drill is used (with the Milwaukee wood bit) to drill, or auger through the frozen material. Every few inches of augering, the bit is removed and the shavings are placed into the appropriate sample container(s). This procedure is repeated until a sufficient volume of the material has been obtained. Care must be taken to ensure that a hole is not drilled through the bottom of the drum.

7.8.6 Post Sampling Procedures

7.8.6.1 After the sample has been taken, the outside of the bottle will be wiped off and labeled with the drum number. The drum number will also be written on the lid of the bottle. All sampling data and observations will be recorded on the drum inspection log.

7.8.6.2 After a group of drums have been sampled, the samples will be collected. The sampling trash, sample gloves, paper towels, etc., will be

© Copyright 1993 OHM Remediation Services Corp.

collected and placed into a drum marked "sampling waste" for disposal. The sampling pipettes will also be collected and packaged in the sampling waste drum for disposal.

7.8.6.3 All openings shall be plugged except during sampling operation. The reason for this is to prevent rainwater from entering the drum before or after sampling has been performed. For drums which are in overpack containers, this is simply having the lid on the overpack container. For drums which are not in overpack containers, this can be accomplished by placing polyethylene sheeting over the top of the drum in a manner that will keep rainwater from entering the drum.

7.8.7 Drum Inventory Log

7.8.7.1 The field data gathered during the drum sampling activities will be recorded on a Drum Inventory Log sheet (See Figure 7.8-1). The following is a list of the information needed for the form.

7.8.7.1 Drum Number--Numbers only; at least 3 digits in length (001).

7.8.7.2 Project Number--Assigned by OHM to each project.

7.8.7.3 Page of --If the drum log is accompanied by Material Safety Data Sheets (MSDS) or other information, then the total number of pages is required. Mostly, will be page 1 of 1.

7.8.7.4 Project Location--Name assigned by OHM (generally the client company's name and/or street address of the facility/site).

7.8.7.5 Project Contact--The OHM employee responsible for overseeing the sampling operation. This person should be the individual to whom questions are to be directed or verbal results given for review (i.e., project chemist, or site supervisor).

7.8.7.6 Phone--Site phone or number of the supporting OHM office.

7.8.7.7 Logger--Name of individual responsible for filling in the sampling portion of the Drum Inventory Log.

© Copyright 1993 OHM Remediation Services Corp.

7.8.7.8 Sampler--Name of individual(s) responsible for obtaining the sample.

7.8.7.9 Weather--Weather conditions during sampling (e.g., temperature and/or precipitation).

7.8.7.10 Date--Date when sample is collected.

7.8.7.11 Time--Time when sample is collected.

7.8.7.12 Drum Type--Place an "x" in the box or boxes which best describe the drum type and materials of construction.

7.8.7.13 Lid Type--An "x" should appear in the box that describes the type of closure on the container.

7.8.7.14 Drum Condition--Place an "x" in the box indicating the integrity of the drum. "Meets DOT specifications" means the drum can be shipped according to Department of Transportation (DOT) regulations.

7.8.7.15 Drum Size--Place an "x" in the box indicating the volume of drum when full. If the drum is overpacked, the inner drum volume should be indicated, not the size of the overpack.

7.8.7.16 Drum Contents--Place an "x" in the box indicating the volume of waste contained in the drum.

7.8.7.17 Overpacked--An "x" should appear in the "yes" box if the container was overpacked, along with an "x" in the box which states the type of overpack utilized.

7.8.7.18 Layers--This designates the layer as top, middle, or bottom for a multi-layered sample. If only one layer exists, complete only the line associated with the top layer, "T."

7.8.7.19 Physical State--Place an "x" in the box indicating the actual physical state of each layer.

7.8.7.20 Color--The standard color description for each layer of the sample should be written in. **The only acceptable color descriptions are as follows.**

© Copyright 1993 OHM Remediation Services Corp.

blue (blu)	white (wht)	black (blk)
red (red)	cream (crm)	orange (org)
pink (pnk)	yellow (yel)	gray (gry)
colorless (cls)	purple (pup)	tan (tan)
green (grn)	brown (brn)	green-blue (gbl)

7.8.7.21 Clarity--An "x" should appear in the box indicating the clarity of each layer of the sample.

7.8.7.22 Layer Thickness--Record the thickness of each layer in inches, an estimate of how deep the layer is.

7.8.7.23 pH--Record pH measurement in standard units (SU); 0 to 14 or the designation "N/A" if there was no measurement obtained.

7.8.7.24 PID--Record the results for vapor analysis by photoionization detector (PID) or the designation "N/A" if there was no measurement obtained. The PID scale reads in ppm (0 to 2,000).

7.8.7.25 Dosimeter--The results of the field radiation survey is recorded in this space or the designation "N/A" if there was no measurement obtained. The dosimeter's scale units are in millirems per hour (mr/hr or mrem/hr).

7.8.7.26 Other--This space is for additional analysis which may take place or the designation "N/A" if there were no other measurements. The information should include the equipment used, the parameter being measured, and its concentration. Example: Drager tube - HCN - 5 ppm

7.8.7.27 DOT Haz--Hazard category from placards or stencils on drum. Example: Corrosive Liquid

7.8.7.28 UN/NA--Space for any UN or NA numbers which are stenciled or written on the drum. These numbers are always prefixed by either UN or NA.

© Copyright 1993 OHM Remediation Services Corp.

7.8.7.29 MFG Name--Name, address, and telephone number of the company producing or distributing the chemical/product. If the space provided is inadequate, indicate that the information continues on the back of the log, and do so.

7.8.7.30 Chemical Name--Any chemical compound, key ingredient, trade name, and/or chemical name of the contents on the label or stenciled on the drum. Indicate whether the information was printed on a label or stenciled or handwritten on the drum. If the space provided is inadequate, indicate that the information continues on the back of the log, and do so.

7.8.7.31 Additional Information--This space is for additional information or comments for which no specific space is designated. It can include unusual comments or problems such as the contents are too hard to sample, drum color, or that colored crystals have formed on the drum. If the space provided is inadequate, indicate that the information continues on the back of the log.

7.8.8 Sample Preservation and Packing Procedures for Drummed Waste Samples

7.8.8.1 No preservatives shall be used.

7.8.8.2 Place sample in a zip lock plastic bag.

7.8.8.3 Place each bagged container in a covered metal can (such as a paint can - D.O.T. shippable) containing absorbent packing material. Place lid on can.

7.8.8.4 Mark the sample identification number on the outside of the can.

7.8.8.5 Arrange for the appropriate transportation mode consistent with the type of hazardous waste involved. Depending on mode of transportation and type of material being transported, additional packaging requirements may apply.

7.8.8.6 In general follow the procedures given in OHM Standard Operating Procedure QP-606 "Sample Packaging and Shipping".

© Copyright 1993 OHM Remediation Services Corp.

7.8.9 Decontamination Procedures

7.8.9.1 All sampling equipment used in obtaining samples from containers will be either dedicated (disposable) or pre-cleaned and decontaminated by the following procedures:

7.8.9.1.1 Thoroughly scrub with a brush using a detergent (Alconox) and hot water solution to remove large particles.

7.8.9.1.2 Thoroughly rinse the detergent solution off the equipment with tap water.

7.8.9.1.3 Rinse the equipment with deionized water.

7.8.9.1.4 Solvent rinse the equipment with pesticide grade isopropanol.

7.8.9.1.5 Solvent rinse the equipment with pesticide grade Hexane.

7.8.9.1.6 Air dry the equipment before use.

7.8.10 Resealing and Secondary Staging

7.8.10.1 All containers opened for sampling need to be resealed to prevent the escape of vapors and possible reactions from rainwater, air and so on. The resealing methods will depend on the opening methods used and include the following:

7.8.10.1.1 Replacing the lid and retaining ring.

7.8.10.1.2 Placing the drum in an overpack (larger drum) when it cannot be resealed by any other method.

7.8.10.1.3 Placing polyethylene sheeting over the drum in a manner that prevents rainwater from entering the drum.

7.8.10.2 It is important to note that these resealing methods are for the purpose of preventing leakage from the container while it is in storage on the site. If the container is to be moved off the site, DOT regulations regarding transportation and sealing of drums will apply.

© Copyright 1993 OHM Remediation Services Corp.

OHM Corporation

DRUM INVENTORY LOG

DRUM NO. _____
PROJECT NUMBER _____
PAGE _____ OF _____

PROJECT LOCATION _____ LOGGER _____ DATE _____
PROJECT CONTACT _____ SAMPLER _____ TIME _____
PHONE _____ WEATHER _____

DRUM TYPE: FIBER ☐ POLY-LINED ☐ STEEL ☐ POLY ☐ STAINLESS STEEL ☐ NICKEL ☐
LID TYPE: RINGTOP ☐ CLOSED TOP ☐
DRUM CONDITION: MEET DOT SPEC. ☐ GOOD ☐ FAIR ☐ POOR ☐
DRUM SIZE: 110 ☐ 85 ☐ 55 ☐ 42 ☐ 30 ☐ 16 ☐ 10 ☐ 5 ☐ OTHER ___
DRUM CONTENTS: VOLUME FULL ☐ 3/4 ☐ 1/2 ☐ 1/4 ☐ <1/4 ☐ MT ☐
OVERPACKED: NO ☐ YES ☐ Overpack Type: FIBER ☐ STEEL ☐ POLY ☐

	PHYS. STATE				COLOR	CLARITY			LAYER THICKNESS
LAYERS	LIQUID	SOLID	GEL	SLUDGE	USE STD COLORS	CLEAR	CLOUDY	OPAQUE	INCHES
T									
M									
B									

FIELD ANALYSIS

pH _____ SU PID _____ ppm
DOSIMETER _____
OTHER _____

DRUM LABELS/MARKINGS

DOT HAZ _____ UN/NA _____

MFG NAME _____
CHEMICAL NAME _____
ADDITIONAL INFORMATION _____

LABORATORY COMPATABILITY DATA

☐ MARK IF PHYSICAL STATE AND COLOR MATCHES THE ABOVE INFORMATION. IF NOT, STOP ANALYSIS AND NOTIFY PROJECT CONTACT. FURTHER WORK WILL NOT BE PAID FOR.

COMPATABILITY CAT: _____
ANALYSTS: _____
DATE PERFORMED: _____

RADIATION: POS ☐ NEG ☐ _____ MREM/HR

	PHYS. STATE				COLOR	CLARITY			WATER SOL.	REACT	pH	HEX. SOL	PER	OXID	CN	SUL	BIEL-STEIN	FLASH POINT	PCBs (25ppm)	LAYER CLASS
LAYERS	LIQUID	SOLID	GEL	SLUDGE	USE STD COLORS	CLEAR	CLOUDY	OPAQUE	SOLUBILITY SPSI DENSITY H OR L	A=AIR W=WATER	STD. UNIT	S OR I	+ OR −	+ OR −	+ OR −	+ OR −	+ OR −	<60°C + OR −	+ OR −	
T																				
M																				
B																				

COMMENTS: _____

PCB CONC. _____ PPM FLASH POINT _____ °C COMPATABILITY COMP. BULK # _____
DATA REVIEWER: _____ DATA REVIEW DATE: _____
FIELD REVIEWER: _____ FIELD REVIEW DATE: _____

TRANSFER NUMBER	TRANSFERS RELINQUISHED BY	TRANSFERS ACCEPTED BY	DATE	TI
1				
2				
3				

TEST 11-22-91

7.8.10.3 Once the drum is sampled and resealed, it should be left where it cannot react with other containers on the site. For a small number of drums, the storage areas may be the staging and opening area. In any event, the sampled drums should be placed in an area away from other groups of containers on the site. The reason is that slowly progressing chemical reactions can start when a container is opened and the contents exposed to air or the disturbance caused by handling the drum. Such a reaction could take hours or even days to occur. Another reason for the segregation and identification of drums for recovery is for use as evidence.

7.8.11 Sample Control

7.8.11.1 The Project Chemist or his/her representative on-site is responsible for the identification, preservation, packaging, handling, shipping, and storage of samples obtained from the site. All samples must be readily identifiable and retain the in-situ characteristics to be determined through testing. All samples collected from containers to be analyzed for compatibilities will be validated through the preparation of a drum log. At the conclusion of the daily sampling operations for containerized waste, it is the responsibility of the Technical Services Representative to review each sample with its respective drum log to assure the documentation is complete and accurate. His signature verifying the sample has been checked must appear in the "Field Reviewer" space prior to sending samples to the laboratory. In addition, these samples will be validated through the following steps:

7.8.11.1.1 Sample Containers--Samples taken from containers to be the analyzed for compatibilities will be placed into a clean 8-ounce glass bottle and secured with a Teflon-lined lid.

7.8.11.1.2 Sample Number--Each sample will be labeled and uniquely identified in accordance with the numbering system used for this job.

7.8.11.1.3 Sample Label--Each sample label will be legibly completed and affixed to the sample container. The label will include the name of the sampler, date and time of collection, place of collection, unique sample ID number, analysis required, preservatives added, and type of sample (grab or composite).

© Copyright 1993 OHM Remediation Services Corp.

7.8.11.1.4 Field Log--All sample collection data and field observations for each sample will be recorded on a drum inventory log (see section 7.9.4.1).

7.8.11.1.5 Chain-of-Custody Procedures--All samples taken on the site will be verified through chain-of-custody procedures. The procedures followed will be in accordance with USACE Sampling Handling Protocols and USEPA procedures.

7.8.11.1.6 Sample Preservation--Samples taken from containers to be analyzed for compatibility will not be preserved.

7.8.11.1.7 Sample Shipment--Samples taken from containers to be analyzed for compatibilities will be packaged in their original shipping container or the sample bottles and transported to the laboratory.

7.9 Characterization and Test Blending

7.9.1 A waste blending test is used to determine if the drums included in a wastestream are truly compatible. Whether the wastes are to be blended on site or to be sent in drums to a disposal facility, a waste blending test must be performed for waste profile purposes. Section 8.0 of the OHM Compatibility Manual outlines waste blending procedures used by OHM. Waste blending is most often performed by the on-site Chemist. However, situations arise when the Sample Technologist is asked to determine which compatibility groups can be blended. Refer to section 8.0, Waste Blending, in the Compatibility Manual prior to test blending any materials. A waste Blending Test chart is found in the Compatibility Manual.

7.9.2 When using the Waste Blending Test Chart, the first step is to locate the compatibility groups (which are to be test blended) on the chart. The next step is to move to the group which appears first on the chart and follow the row number down until the other compatibility group is reached. For example the supervisor of project (x) is planning to mix acid liquids with the water reactives on site. The supervisor wants to know if this will be a safe combination. The first step is to locate acids and water reactives on the chart. Once the two groups have been located, the next step is to determine which group is listed first on the chart. The acids groups is listed first. The next step is to follow column one down to the water reactive group. The chart lists the

© Copyright 1993 OHM Remediation Services Corp.

combination to be (I,V,E). The final step is to determine what the letter combination means (this can be found on the upper right portion of the chart). The I is for Incompatible, the V is for Violent Reaction, and the E is for Explosive Mixture. Therefore, it would <u>not</u> be a good idea to blend these compatibility categories.

7.9.3 Shipment of Blended Waste

7.9.3.1 Samples of the blended waste to be sent off-site for laboratory analysis for disposal parameters will be shipped by the following procedures and by the procedures listed in OHM Standard Operating Procedure QP-606 "Sample Packaging and Shipping".

7.9.3.1.1 The lids of the sample jars will be sealed with tape.

7.9.3.1.2 The sample container will be placed inside two 4-mil plastic, protective bags.

7.9.3.1.3 The sealed sample will be place in a metal paint can.

7.9.3.1.4 The samples will be placed into a cooler and packed with blue ice to maintain their temperature at 4 degrees Celsius.

7.9.3.1.5 Bubble pack or other insulating packing material will be placed into empty spaces in the cooler.

7.9.3.1.6 The cooler will be sealed, addressed, identified, and placarded according to the nature of the hazards associated with the materials being shipped.

8.0 EQUIPMENT

8.1 The equipment listed below will normally be required to accomplish drum sampling on a project site. Additional equipment or more specific equipment requirements may be found in both the CSAP and the Site Work Plan.

* Spill control kit
* Remote controlled drum opening equipment - pneumatic, hydraulic or other
* LEL/O_2 meter (MSA Model 260/360)

© Copyright 1993 OHM Remediation Services Corp.

* HNU portable organic vapor analyzer (Model HW-101)

* Fire extinguisher, Class A, B and C, size as per H&S Plan requirements

* Radiation survey meter, internal GM detectors (Ludlum Model 5, P/N 48-1607)
* Personal protective equipment.This may include: Robar or Tingley boots, Tyvek and/or Saran protective suit with hood, acid jacket and pants, vinyl booties, vinyl sample gloves, nitrile outer gloves, hard hat with splash shield and SCBA or airline units.

* Rolls of plastic sheeting (Visqueen)

* Sampling equipment

* Equipment and supplies needed for drum sampling (per 100 drums)

  - 120 drum log sheets (OHM Supplied)
  - 120 8oz jars with Teflon lined lids (Qoorpak Brand)
  - 200 tongue depressors (VWR P/N 62505-006)
  - 120 11mm dip tubs
  - 400 pair sample gloves
  - 5 mean streaks
  - 4 rolls of paper towels (Local Purchase)
  - 2 30 gal. polyethylene trash bags (Local Purchase)
  - 12 chain-of-custody forms (OHM Supplied)
  - 1 Liter of isopropanol (Pesticide Grade)(VWR P/N JT9334-3)
  - 1 Liter of hexane (Pesticide Grade)(VWR P/N JT9126-3)

* Equipment and supplies generally needed per drum job

  - 1 12-column book (Local Purchase or OHM Supplied)
  - 2 OHM record books (OHM Supplied)
  - 1 knife, beryllium copper (McMaster-Carr P/N 3925A1)
  - 1 bung wrench, Ampco metal (McMaster-Carr P/N 6496A1)
  - 1 screwdriver, beryllium copper (McMaster-Carr P/N 6525A3)
  - 1 scraper, beryllium copper (McMaster-Carr P/N 6473A1)
  - 1 hammer, claw, BeCu alloy (McMaster-Carr P/N 6484A2)
  - 1 chisel, Ampco metal, 1" wide (McMaster-Carr P/N 6458A94)
  - 2 pairs cut-proof glove liners (Lab Safety P/N WA-15128)
  - 2 15/16" sockets, BeCu alloy (McMaster-Carr P/N 6503A33)
  - 2 1/2" drive ratchets, BeCu alloy (McMaster-Carr P/N 6503A3)

© Copyright 1993 OHM Remediation Services Corp.

- o 1 11/4" X 18"L wood boring bit (McMaster-Carr P/N 2878A25)
- o 1 1/2" air powered drill, low RPM (Grainger P/N 4Z542)
- o 1 tool box, polyethylene with lock for above (Local Purchase)
- o 2 wash bottles, isopropanol (Lab Safety P/N WA-13831)
- o 2 wash bottles, hexane (Lab Safety P/N WA-23158)
- o 2 wash bottles, acetone (Lab Safety P/N WA-13828)
- o 1 H_2S monitox with gas generator (OHM Supplied)
- o 1 HCN monitox with gas generator (OHM Supplied)

* Source of pressurized air (100 psi and 8 CFM) and air hoses for air drill and remote pneumatic drum punch.

8.2 Deviations from the above list and substitutions for equipment listed above need to be approved by the Project Chemist or the Manager, Field Sampling Services.

9.0 ATTACHMENTS

None

© Copyright 1993 OHM Remediation Services Corp.

OHM Corporation

QUALITY POLICY AND PROCEDURE APPROVAL AND REVISION RECORD

Document # QP-610	Title Sample Preservation and Holding Times

APPROVAL

Name	Title	Signature	Date
Willis Moody	Super. QA/QC		12/17/93
G. J. Herzig	Mngr. Field Tech.		12/17/93
Terry Sole	Dir. Tech. Svcs.		12/17/93

REVISION RECORD

Ltr.	Date	Change Description	Initials						
1		issue	-	-	-	-	-	-	-
2									
3									
4									
5									
6									
8									
9									
10									
11									
12									
13									
14									
15									
16									

OHM Corporation

STANDARD OPERATING PROCEDURE

Title: Sample Preservation and Holding Times **Document #:** QP-610

Date Issued: January 17, 1994 **Rev:** 0 **Date:** December 17, 1993

1.0 PURPOSE

1.1 To describe the procedure for preserving samples including data on sample containers, sample volume, preservatives and holding times.

2.0 SCOPE

2.1 In preparation for a sampling event, information on the types of sample containers needed, the amount of sample volume needed, the preservatives required and the holding times for each medium under investigation needs to be known. Table 4-1 of this Standard Operating Procedure describes the sample volumes, sample containers, preservation necessary, and holding times for various organic and inorganic parameters.

3.0 RELATED DOCUMENTS

3.1 "Characterization of Hazardous Waste Sites, a Methods Manual, Volume two; Available Sampling Methods (2nd Edition)", EPA-600/4-84-076

4.0 GENERAL INFORMATION

4.1 Sample Containers

4.1.1 Polyethylene, polypropylene, Teflon, and glass with Teflon-lined lids are acceptable sample containers. OHM's sample containers are pre-cleaned to EPA Protocol A. When using precleaned containers, the certificate of analysis and/or any other documentation should be placed with the project files for reference if questions should arise at a later

© Copyright 1993 - OHM Remediation Services Corp.

time. Note: When sampling for parameters with the prefix "Bio" contact the designated laboratory to determine if the sample containers need to be sterile. If sterile containers are necessary, then special arrangements will have to be made (i.e. the laboratory will need to provide sample containers).

4.2 Sample Volumes

4.2.1 Table 4-1 describes the minimum volume necessary for analysis of specified parameters. This should not be confused with the recommended sample container. This information is pertinent because one should always plan on taking four times the minimum required volume. Although the required sample container often meets or exceeds that volume (4 x minimum volume) it is sometimes necessary to obtain additional sample to meet that volume. For example; a sample obtained for Volatile Organics would need to be 160ml but the required sample container is a 40ml VOA vial. Therefore, it would be necessary to obtain four 40ml VOA vials of the sample.

4.3 Preservation

4.3.1 Preservation requirements for water and wastewater samples are also provided in Table 4-1. More detail concerning these requirements may be found in the specific analytical procedures. Preservation of product, oils, and solids is usually cooling to 4°C (if required). Liquid samples of product (unknown materials) and oils should never have preservative liquids added to them. This could result in violent reactions of incompatible chemicals.

4.4 Holiding Times

4.4.1 The maximum holding times, for specified parameters, are detailed in Table 4-1. If the holding times are exceeded. the validity of the sample is diminished. Contact the designated laboratory to ensure that the samples can be analyzed within the holding time. Laboratories are often overloaded with samples and will not be able to meet some analytical requirements (i.e. 24- Hour holding times, 48-Hour holding times, etc.). **Always contact the laboratory prior to shipment of samples.**

© Copyright 1993 - OHM Remediation Services Corp.

TABLE 4-1

RAMETERS	MINIMUM SAMPLE VOLUME	HOLDING TIME	CONTAINER	CLEANED TO EPA PROTOCOL	PRESERVATIVE
Acidity	** 100ml	14 Days	**250ml HDPE	C	Cool to 4°C
Acrolein & Acrylonitrile	* 5 grams ** 40ml	14 Days	* 4oz. CWM ** 40ml VOA	* B ** B	.008%, $NA_2S_2O_3$, pH 4.5
Alkalinity	** 100ml	14 Days	**250ml HDPE	C	Cool to 4°C
Ammonia	** 500ml	28 Days	**1L HDPE	C	Cool to 4°C, $H_2SO_4 < 2$
Benzidines	* 10 grams ** 1L	7 Days to Extract 40 Days after extract	*8oz. CWM ** 2-1/2L A.J.	* A ** A	.008, $NA_2S_2O_3$, Cool to 4°C
Beta	* 100 grams ** 1L	6 Months	*8oz HDPE **2L HDPE	* A ** C	$HNO_3 < 2$
chemical Oxygen Demand (Carbonaceous)	** 1L	48 Hours	**2L HDPE	C	Cool to 4°C
Biochemical Oxygen Demand	** 1L	48 Hours	**2L HDPE	C	Cool to 4°C
Bromide	** 100ml	28 Days	**250ml HDPE	C	Cool to 4°C
Chemical Oxygen Demand	** 50ml	28 Days	**125ml HDPE	C	Cool to 4°C, $H_2SO_4 < 2$
Chloride	* 10grams ** 50ml	28 Days	*4oz. CWM **125ml HDPE	* A ** C	Cool to 4°C

© Copyright 1993 - OHM Remediation Services Corp.

PARAMETERS	MINIMUM SAMPLE VOLUME	HOLDING TIME	CONTAINER	CLEANED TO EPA PROTOCOL	PRESERVATIVE
Chlorinated Herbicides	* 10 grams ** 1L	7 Days to Extract 40 Days after extract	*8oz. CWM **2-1/2L A.J.	* A ** A	Cool to 4°C
Chlorinated Hydrocarbons	* 10 grams ** 1L	7 Days to Extract 40 Days after extract	*8oz. CWM **2-1/2L A.J.	* A ** A	Cool to 4°C
Chlorine (Total Residual)	** 200ml	Analyze Immediate	**500ml HDPE	C	Cool to 4°C
Chromium VI	* 10 grams ** 100ml	24 Hours	*8oz. CWM **250ml HDPE	* A ** C	Filter immediately Cool to 4°C
Coliform, Fecal & Total	* n/a ** 100ml	6 Hours	*4oz. CWM **250ml HDPE	* A ** C	.008%,$NA_2S_2O_3$, Cool to 4°C
Color	** 50ml	48 Hours	**125ml HDPE	C	Cool to 4°C
Cyanide (Total & Amenable)	* 10 grams ** 500ml	14 Days	*4oz. CWM **1L HDPE	* A ** C	NaOH to pH 12, .6g Asbc. Acid
Dioxins & Furans	* 10 grams ** 1L	7 Days to Extract 40 Days after extract	*8oz. CWM **2-1/2L A.J.	* A ** A	.008%,$NA_2S_2O_3$
Dissolved Metals	** 200ml	6 Months	**500ml HDPE	C	Filter Immediately $HNO_3 < 2$
Fecal Strepto-cocci	** 100ml	6 Hours	**250ml HDPE	C	.008%,$NA_2S_2O_3$, Cool to 4°C
Fluoride	** 300ml	28 Days	**500ml HDPE	C	Cool to 4°C

© Copyright 1993 - OHM Remediation Services Corp.

PARAMETERS	MINIMUM SAMPLE VOLUME	HOLDING TIME	CONTAINER	CLEANED TO EPA PROTOCOL.	PRESERVATIVE
..aloethers	* 10 grams ** 1L	7 Days to Extract 40 Days after extract	*8oz CWM **2-1/2L A.J.	* A ** A	.008%,$NA_2S_2O_3$, Cool to 4°C
Hardness	** 100ml	6 Months	**250ml HDPE	C	HNO_3 < 2, H_2SO_4 < 2
Hazardous Waste Characterization	* 200 grams	14 Days	*8oz CWM	A	Cool to 4^0C
Hydrogen Ion (pH)	* 100 grams ** 25ml	Analyze Immediate	*4oz. CWM **60ml HDPE	* A ** C	Cool to 4^0C
Kjeldahl and Organic Nitrogen	** 500ml	28 Days	**1L HDPE	C	Cool to 4°C, H_2SO_4 < 2
Mercury	* 10 grams ** 100ml	28 Days	*8oz. CWM **250ml HDPE	* A ** C	HNO_3 < 2
tals (Except Chromium VI & Mercury)	* 10 grams ** 200ml	6 Months	*8oz. CWM **500ml HDPE	* A ** C	HNO_3 < 2
Nitrate	* 10 grams ** 100ml	48 Hours	*8oz. CWM **250ml HDPE	* A ** C	Cool to 4°C
Nitrate-Nitrite	* 10 grams ** 100ml	28 Days	*8oz. CWM **250ml HDPE	* A ** C	Cool to 4°C, H_2SO_4 < 2
Nitrite	* 10 grams ** 50ml	48 Hours	**125ml HDPE	C	Cool to 4°C
Nitroaromatics & Isophorone	* 10 grams ** 1L	7 Days to Extract 40 Days after extract	*8oz CWM **2-1/2L A.J.	* A ** A	.008%,$NA_2S_2O_3$, Dark

© Copyright 1993 - OHM Remediation Services Corp.

PARAMETERS	MINIMUM SAMPLE VOLUME	HOLDING TIME	CONTAINER	CLEANED TO EPA PROTOCOL	PRESERVATIVE
Nitrosamines	* 10 grams ** 1L	7 Days to Extract 40 Days after extract	*8oz. CWM ** 2-1/2L A.J.	* A ** A	.008%, $NA_2S_2O_3$, Dark
Nonhalogenated Volatile Organics (8015)	* 5 grams ** 40 ml	14 Days	*4oz. CWM **40ml VOA	* B ** B	Cool to 4°C pH <2 H_2SO_4 or HCl
Oil & Grease TPHC	* 10 grams ** 1L	28 Days/14	*2L CWM **2L CWM	* A ** A	Cool to 4°C, HCl < 2
Organic Carbon	* 10 grams ** 25ml	28 Days	* 4oz. CWM **125ml HDPE	* A ** C	Cool to 4°C, HCL/H_2SO_4 < 2
Orthophosphate	** 50ml	48 Hours	**125ml HDPE	C	Filter Immediately Cool to 4°C
Oxygen, Dissolved Probe	** 300ml	Analyze Immediate	**300ml BOD	**300ml BOD btl.(wh.)	Cool to 4°C
PCB's	* 10 grams ** 1L	7 Days to Extract 40 Days after extract	*8oz. CWM **2-1/2L A.J.	* A ** A	Cool to 4°C
Pesticides, Chlorinated	* 10 grams ** 1L	7 Days to Extract 40 Days after extract	*8oz. CWM **2-1/2L A.J.	* A ** A	Cool to 4°C, pH 5-9
Phenolics	* 10 grams ** 100ml	28 Days	*8oz. CWM **1L B.R.	* A ** A	Cool 4°C, H_2SO_4 < 2
Phenols	* 10 grams ** 1L	7 Days to Extract 40 Days after extract	*8oz. CWM ** 2-1/2L A.J.	* A ** A	.008%, $NA_2S_2O_3$, Cool to 4°C
Phosphorus (Total)	** 50ml	28 Days	**125ml HDPE	C	Cool to 4°C

© Copyright 1993 - OHM Remediation Services Corp.

PARAMETERS	MINIMUM SAMPLE VOLUME	HOLDING TIME	CONTAINER	CLEANED TO EPA PROTOCOL.	PRESERVATIVE
osphorus (Elemental)	** 50ml	48 Hours	**1L B.R.	A	Cool to 4°C
Phthalate Esters	* 10 grams ** 1L	7 Days to Extract 40 Days after extract	*8oz. CWM ** 2-1/2L A.J.	* A ** A	Cool to 4°C
Polynuclear Aromatic Hydrocarbons	* 10 grams ** 1L	7 Days to Extract 40 Days after extract	*8oz. CWM **2-1/2L A.J.	* A ** A	.008%,$NA_2S_2O_3$, Dark
Purgeable Aromatic Hydrocarbons (BTEX)	* 5 grams ** 40ml	14 Days	* 4oz. CWM ** 40ml VOA	* B ** B	.008%, $NA_2S_2O_3$, HCL<2
Purgeable Halocarbons (8010)	* 5 grams ** 40ml	14 Days	* 4oz. CWM ** 40ml VOA	* B ** B	.008%, $NA_2S_2O_3$
diological t Gross Alpha	* 100 grams ** 1L	6 Months	*8oz HDPE **2L HDPE	* A ** C	HNO_3 < 2
Radium (Total)	* 100 grams ** 1L	6 Months	*8oz. HDPE **2L HDPE	* A ** C	HNO_3 < 2
Residue (Volatile)	** 100ml	7 Days	**250ml HDPE	C	Cool to 4°C
Residue (Non-Filterable)	** 100ml	7 Days	**250ml HDPE	C	Cool to 4°C
Residue (Filterable)	** 100ml	7 Days	**250ml HDPE	C	Cool to 4°C
Residue (Total)	** 100ml	7 Days	**250ml HDPE	C	Cool to 4°C

© Copyright 1993 - OHM Remediation Services Corp.

PARAMETERS	MINIMUM SAMPLE VOLUME	HOLDING TIME	CONTAINER	CLEANED TO EPA PROTOCOL	PRESERVATIVE
Residue (Settleable)	** 1L	48 Hours	**Imhoff Cone	C	Cool to 4°C
Semi-Volatile Organics (625/ 8270)	* 10 grams ** 1L	7 Days to Extract 40 Days after extract	*16oz. CWM **2-1/2L Jug	* A ** A	Cool to 4°C
Silica	** 50ml	28 Days	**125ml HDPE	C	Cool to 4°C
Specific Conductance	* 100 grams ** 100ml	28 Days	*8oz. CWM **250ml HDPE	* A ** C	Cool to 4°C
Sulfate	* 10 grams ** 50ml	28 Days	*4oz. CWM **125ml HDPE	* A ** C	Cool to 4°C
Sulfide	* 100 grams ** 500ml	7 Days	*8oz CWM **1L HDPE	* A ** C	ZnAc plus NaOH 9
Sulfite	** 50ml	Analyze Immediate	**125ml HDPE	C	Cool to 4°C
Surfactants	** 250ml	48 Hours	**500ml HDPE	C	Cool to 4°C
TCLP Extraction	* 100 grams	7 Days to Extract 40 Days after extract	*2.5L CWM	A	Cool to 4°C
TCLP Sample	* 100 grams	7 Days to Extract 40 Days after extract	*16oz. CWM	A	Cool to 4°C
Temperature	** 1L	Analyze Immediate	**2L HDPE	C	Cool to 4°C

© Copyright 1993 - OHM Remediation Services Corp.

PARAMETERS	MINIMUM SAMPLE VOLUME	HOLDING TIME	CONTAINER	CLEANED TO EPA PROTOCOL.	PRESERVATIVE
TOX Total Organic Halogens	* 10 grams ** 250ml	7 Days to Extract 40 Days after extract	*4oz. CWM **16oz. B.R.	* B ** A	H_2SO_4 < 2, Cool to 4°C
TPH by IR	** 2L	Amanlyze Immediate	** 1L CWM	C	Cool to 4°C 1:1 HCl < 2
Turbidity	** 100ml	48 Hours	**250ml HDPE	C	Cool to 4°C
Volatile Organics (624/ 8240)	* 5 grams ** 40ml	14 Days	*4oz. CWM **40ml VOA	* B ** B	Cool to 4°C
Winkler D.O.	** 300ml	8 Hours	**300ml BOD	**300ml BOD btl. (wh.)	Fix on site/store dark

HDPE = High-Density Polyethylene Bottles
B.R. = Boston Round
CWM = Clear Wide Mouth
A.J. = Amber Jug

* = Solid Waste Method (SW-846)
** = Water/Wastewater Method (EPA-600)

© Copyright 1993 - OHM Remediation Services Corp.

OHM Corporation

QUALITY POLICY AND PROCEDURE APPROVAL AND REVISION RECORD

Document # QP-613	Title Pile Sampling

APPROVAL

Name	Title	Signature	Date
Willis Moody	Super. QA/QC		8/2/94
G. J. Herzig	Mngr. Field Tech.		8/2/94
Terry Sole	Dir. Tech. Svcs.		8/2/94

REVISION RECORD

Ltr.	Date	Change Description	Initials						
1		issue	-	-	-	-	-	-	-
2									
3									
4									
5									
6									
7									
8									
9									
10									
11									
12									
13									
14									
15									

form # qp613-Rev 00

STANDARD OPERATING PROCEDURE

Title: Pile Sampling **Document #:** QP-613

Date Issued: August 2, 1994 **Rev.** 0 **Date:** August 2, 1994

1.0 PURPOSE

1.1 The purpose of this procedure is as follows:

1.1.1 Detail the procedures for collecting soil pile samples.

1.1.2 Define the methods for finding soil pile volumes.

1.1.3 Identify and quantify the equipment and supplies required for pile sampling

1.1.4 Identify unique safety problems associated with pile sampling

2.0 SCOPE

2.1 This procedure will apply to the following sampling activities.

2.1.1 Sampling of excavated soil that has been stockpiled.

2.1.2 Sampling of stockpiled soil that has undergone fixation treatment

2.1.3 Sampling of stockpiled waste materials.

2.1.4 Sampling of stockpiled raw materials that are not necessarily waste materials

© Copyright 1994 OHM Remediation Services Corp.

3.0 RELATED DOCUMENTS

3.1 Surface Soil Sampling SOP, OHM QP-609

3.2 ASTM E-300, Standard Practice for Sampling Industrial Chemicals

3.3 Preparation of Soil Sampling Protocol: Techniques and Strategies, (EPA 600/4-83-020), Dr. Benjamin J. Mason, Prepared under contract to the USEPA, Environmental Monitoring Systems Laboratory-Las Vegas, August 1983

3.4 Soil Sampling Quality Assurance User's Guide, (EPA 600/4-84-043), Dr. Delbert S. Barth and Dr. Benjamin J. Mason, Prepared by the Environmental Research Center, University of Nevada, Las Vegas under a cooperative agreement with the USEPA, May 1984

4.0 GENERAL INFORMATION

4.1 Soils are often non-homogeneous and distribution of contaminants in a soil is often non-uniform. To offset these during sampling the following are accomplished.

4.1.1 Collect samples with high volume-to-surface area ratios.

4.1.2 Use a systematic (grid pattern) approach to sample collection.

4.1.3 Maintain a detailed record during sampling operations, particularly noting location, depth, and characteristics such as grain size, color and odor, and/or readings obtained on field monitoring equipment.

4.2 Soil sampling equipment needs to meet the following general requirements.

4.2.1 Construction materials will be stainless steel or plastic. Chrome or nickel plated steel or brass should not be used. Brass sampling tools are usable if they are non-reactive/non-contaminating to the sample medium.

4.2.2 Materials of construction shall be compatible with and non-reactive to compounds of interest.

4.2.3 Materials of construction will not leave residues in samples that will interfere with analyses of samples.

© Copyright 1994 OHM Remediation Services Corp.

4.3 Soil bioactivity and problems with volatilization of organic compounds from the soil require that the following be accomplished for soil samples immediately after collection.

4.3.1 Tightly seal containers.

4.3.2 Refrigerate samples to ~4° C.

4.3.3 Remove samples from exposure to sunlight.

4.4 Pile Sampling QA/QC

4.4.1 Quality control samples will be taken at the discretion of the client and OHM management. Provisions for quality control sampling are usually included in the CSAP.

4.4.2 Types of Quality Control samples that might be taken during a pile sampling operation can include Matrix Spike/Matrix Spike Duplicates, Field Spikes, Duplicates, and/or Split Samples. The number and types of QA/QC samples will vary according to the required contract specific data quality objective level as illustrated in Table 4.1.

4.4.3 For most projects it is recommended that for every ten (10) samples one duplicate sample should be collected for analysis.

4.5 Pile Sampling Precautions

4.5.1 In order to collect samples that accurately represent levels of contamination found in the pile, a grid will usually need to be developed. This may require the use of mathematical formulas, a calculator, and various measurement techniques to determine the height, and length and width of the pile.

4.5.2 Other methods of sampling a pile are to divide the pile into sections and grid sample each section, or to take a set number of samples for every (x) number of cubic yards of soil (i.e. ten samples for every 500 yd^3 of soil in the pile).

© Copyright 1994 OHM Remediation Services Corp.

TABLE 4.1

Specific Data Quality Objectives

	SAMPLE TYPE	LEVEL C METALS	LEVEL C ORGANICS	LEVEL D METALS	LEVEL D ORGANICS	LEVEL E METALS	LEVEL E ORGANICS
FIELD QC	Trip Blank	NA	1/cooler	NA	1/cooler	NA	1/cooler
	Equipment Rinsate (1)	1/day	1/day	1/day	1/day	1/day	1/day
	Field Blank	*	*	*	*	*	*
	Field Duplicate (2)	10%	10%	10%	10%	5%	5%
LAB QC	Method Blank Spikes	1/batch	1/batch	CLP	CLP	1/batch	1/batch
	Matrix Spike	5%	5%	CLP	CLP	NA	NA
	Matrix Spike Duplicate	5%	5%	CLP	CLP	NA	NA
	Blanks	10%	10%	CLP	CLP	NA	NA
	Method Blank (3)	1/batch	1/batch	1/batch	1/batch	1/batch	1/batch
	Duplicate	5%	5%	10%	10%	5%	5%

(1) Samples are collected daily; however, only samples from every other day are analyzed. Other samples are held and analyzed only if evidence of contamination exists.

(2) The duplicate must be taken from the same sample which will become the laboratory matrix/spike duplicate of organics or for the sample used as a duplicate in organic analysis.

(3) Method blank taken through digestion

© Copyright 1994 OHM Remediation Services Corp.

* 1 per source/event for all levels and all analytes.

CLP - Follows current CLP method requirements. For methods not defined in the CLP, the blank, blank spike, matrix spike, and matrix spike duplicate shall be performed for every 20 samples (5%)

4.5.3 The problems associated with developing a grid to sample a pile can be eliminated by obtaining a sample from every (y) number of buckets that are placed onto the pile (i.e. one 8oz sample collected from every 3 Trackhoe buckets emptied into the pile). These samples can be stored on ice and composited daily. When excavation is completed there should be a good representation of the concentrations of soil in the pile. However, compositing of samples is **NOT** to be done if analyses for volatile organic compounds will be performed on the samples.

4.5.4 Soil piles may be physically unstable. Precautions may need to be taken so that sampling can be **safely** accomplished. This in effect may limit the ways in which a pile can be sampled.

4.6 Preparation for Sampling

4.6.1 Whenever a pile sampling project is performed, it is always necessary to obtain measurements of the pile(s) which are used for calculating the volume of the pile(s). Two methods are used for pile volume calculations. One method is for conical or pyramidal piles and the other is for elongated or prism shaped piles.

4.6.2 Volume of Conical or Pyramidal Pile

4.6.2.1 Measure height and base parameters (i.e. length/width for rectangle, radius of circle, etc.) of pile.

4.6.2.2 Determine area of base of pile. If base of pile is irregularly shaped divide into regularly shaped areas and figure separately. Add areas together to obtain total area of base.

Square/Rectangle:	$A = L - W$
Circle:	$A = \pi - r^2$
Ellipse:	$A = \pi - a - b$
Triangle:	$A = \frac{1}{2} B - h$

© Copyright 1994 OHM Remediation Services Corp.

Where:

A = Area of the base of the pile
L = Length of one side of a square or rectangle
W = Width of other side of rectangle
π = 22/7 or 3.14
r = radius of circle
a = ½ of semi-minor axis
b = ½ of semi-major axis
B = Base length of triangle
h = Distance from base to top of triangle perpendicular to base.

4.6.2.3 Determine volume of pile. For all base shapes use the following equation:

$$V = \frac{1}{3} A - H$$

Where:

V = Volume of pile
A = Area of the base of the pile
H = Height to apex of the pile

<u>NOTE</u>: If the top of the pile is not complete, estimate height to apex from top of pile. Determine volume of pile as if it were complete to estimated apex. Determine volume of missing top part in the same manner. Subtract missing top from estimated total pile volume to obtain actual pile volume.

4.6.3 Volume of an Elongated or Prism Shaped Pile

4.6.3.1 Divide pile into uniform shaped (along length) body and sides. Measure pile accordingly (length of body, height, dimensions of sides).

4.6.3.2 Determine the area of the face of the body by defining it's shape and then using the formula for that shape.

Triangular Area = $\frac{1}{2} B - h$
Semicircular Area = $\frac{1}{2} \pi - r^2$

© Copyright 1994 OHM Remediation Services Corp.

Where:

B = Base of triangle, width of pile
h = Height of triangle/pile
π = 22/7 or 3.14
r = Radius of circle, height of pile

4.6.3.3 Determine volume of the body of the pile. For all face shapes use:

$$V = A - L$$

Where:

V = The volume of the body of the pile
A = The area of the face of the body
L = The length of the body

4.6.3.4 Determine the volume of the sides of the pile.

The sides of the pile can be treated as conical shaped piles and their volumes determined as such. The volumes of the sides can then be added to the volume of the body of the pile to find the total volume of the pile.

$$TV = VB + VS1 + VS2$$

Where:

TV = Total volume of pile
VB = Volume of body of pile
VS1 = Volume of one side of pile
VS2 = Volume of other side of pile

4.6.4 Volume of Irregularly Shaped Piles

4.6.4.1 Many piles will not exhibit dimensions exactly the same as those described above. These piles should be divided into more regularly shaped sections and their volumes determined independently. These separated volumes can then be added to obtain the total volume of the pile.

© Copyright 1994 OHM Remediation Services Corp.

5.0 DEFINITIONS

5.1 Environmental Sample - low concentration sample typically collected off site and not requiring DOT hazardous waste labelling as a high hazard sample.

5.2 Hazardous Waste Sample - medium to high concentration sample (e.g., source material, sludge leachate) requiring DOT labelling and Contract Lab handling as a high hazard sample.

5.3 Ellipse - a closed symmetrical figure bounded by a curve like an elongated circle.

5.3.1 Semi-major axis - a line segment from the center of the ellipse to its boundary along the longest dimensions.

5.3.2 Semi-minor axis - a line segment from the center of the ellipse to the its boundary along the dimension perpendicular to the longest one.

5.4 Regularly shaped areas - all those areas which shape can be approximated by the following: rectangle, circle, triangle and ellipse.

6.0 RESPONSIBILITIES

6.1 Field Operations Leader

6.1.1 The Field Operations Leader is responsible for the overall safety of the sampling operation. This includes informing and obtaining help from local authorities if necessary, selection of sample points, and halt of operations if necessary.

6.2 Sampling Technicians

6.1.2 The Sampling Technicians are responsible for the following.

6.1.1 Reading and implementing project sampling plans.

6.1.2 Accumulating and dispatching appropriate supplies and equipment to accomplish the sampling objectives.

6.1.3 Locating and marking sampling points.

© Copyright 1994 OHM Remediation Services Corp.

6.1.4 Decontamination of field sampling gear in a correct and appropriate manner consistent with site requirements.

6.1.5 Collecting, preserving and packaging soil pile samples.

6.1.6 Maintaining sampling records, sampling logs, data sheets, and maps.

6.1.7 Filling-out Chain-of-Custody forms and appropriate log books.

6.1.8 Maintaining physical custody of samples until they are transferred off-site or to an on-site laboratory.

7.0 PROCEDURES

7.1 Sampling Procedures

7.1.1 As with soil sampling, soil or waste pile samples can be collected at the surface or at depth, and different equipment will be required in each instance. Surface samples can be collected most efficiently with a trowel or scoop. For samples at depth, a decontaminated bucket auger may be required to advance the hole, then another decontaminated auger used for sample collection. For a sample core, waste pile samplers or grain samplers may be used.

7.1.2 Surface Soil Samples

7.1.2.1 Locate the sample point and clear away surface debris. Mark the sampling point with a surveyor's stake if possible.

7.1.2.2 Collect an adequate volume of soil or waste material from a depth of 0-6 inches using a shovel to initially open up the pile surface and then using a trowel or scoop to obtain the actual sample material.

7.1.2.3 Immediately transfer the material to a sample container and seal the container.

© Copyright 1994 OHM Remediation Services Corp.

7.1.3 Surface Soil Core Samples

7.1.3.1 For a core sample from the surface proceed as in 1.0 and 2.0 above and then use a waste pile sampler, trier or tube corer to obtain a sample in place of using the trowel.

7.1.3.2 Transfer the sample directly into the sample container, or use a decontaminated trowel, tongue depressor or spatula for transfer if necessary. A wide mouth bottle is preferable for containing the sample, as it requires less disturbance of the sample being transferred into it.

7.1.4 At Depth Soil Samples

7.1.4.1 Locate the sample point and clear away surface debris.

7.1.4.2 Use a shovel to initially open up the pile surface and then use a decontaminated bucket auger to advance the hole to the desired sampling depth.

7.1.4.3 Use another decontaminated bucket auger or suitable sampling device to collect the sample, and, if necessary, a decontaminated spatula or trowel to transfer the sample into the sample bottle.

7.1.4.4 For samples at depths greater than three feet, a hand operated hammer and extension rod may be utilized with a split spoon sampler for sample collection. Upon retrieval the split spoon is opened, its contents logged, if necessary, and the sample materials immediately transferred into a sample bottle using a decontaminated spatula, spoon, tongue depressor or trowel.

7.1.5 Sample Homogenization

7.1.5.1 For some types of soil samples it is desirable to thoroughly homogenize the collected sample. This can be done by using a large stainless steel mixing bowl and spoon. The sample is stirred and mixed and then placed in a sample container. The project CSAP will usually detail whether this needs to be done or not. **DO NOT HOMOGENIZE SAMPLES THAT WILL BE ANALYZED FOR VOLATILE ORGANIC COMPOUNDS.**

© Copyright 1994 OHM Remediation Services Corp.

7.2 Sampling Equipment Decontamination

7.2.1 When disposable equipment is not used for sampling, the equipment must be cleaned prior to usage, after each usage, and before usage at another sample point.

7.2.2 Inorganic Constituents

7.2.2.1 If the constituents of interest are inorganic, the following steps will be followed:

7.2.2.1.1 Wash with Alconox and tapwater

7.2.2.1.2 Rinse with tapwater

7.2.2.1.3 Rinse with dilute (10%) hydrochloric acid or nitric acid.

7.2.2.1.4 Rinse with tapwater

7.2.2.1.5 Rinse with distilled water or deionized water

NOTE: Dilute hydrochloric acid is generally preferred to nitric acid when cleaning stainless steel because nitric acid may oxidize stainless steel.

7.2.3 Organic Constituents

7.2.3.1 If the constituents of interest are organic, the following steps will be followed:

7.2.3.1.1 Wash equipment with Alconox and tapwater

7.2.3.1.2 Rinse with tapwater

7.2.3.1.3 Rinse with distilled water

7.2.3.1.4 Rinse with pesticide free grade isopropanol

© Copyright 1994 OHM Remediation Services Corp.

8.0 EQUIPMENT

8.1 The materials required to perform soil pile sampling may include the following.

8.1.1 Soil sampling devices:

* Corer, tube type, 18" (Forestry Suppliers P/N 77019)
* Trier (See Attachment 9.1)
* Waste Pile Sampler (See Attachment 9.1)
* Split Spoon w/hammer + extension rods (See Attachment 9.2)
* Bucket auger, 3 1/4", with handle and ext. rods (AMS brand)
* Scoop, plastic (VWR P/N 56920-025 or 56920-036)
* Trowel, pointing, steel (Forestry Suppliers P/N 53717)
* Spoon/spatula, stainless steel (VWR P/N 57952-107)
* Tongue depressors, wood (VWR P/N 62505-006)
* Clean shovel, steel (Local Purchase)
* Sample Containers, Precleaned Glass or Plastic of appropriate size.
* Sample labels (OHM Supplied)
* Custody seals (If required for project)(OHM Supplied)
* Sample gloves, latex or nitrile (PVC may not be acceptable)
* Trash bags, 30 gallon, heavy duty (Local Purchase)

8.1.2 Contamination Supplies

* Nitric Acid, trace metal grade (VWR P/N JT9598-0)**
* Hydrochloric Acid, trace metal grade (VWR P/N JT9530-0)**

© Copyright 1994 OHM Remediation Services Corp.

* DI Water (Local Purchase)
* Isopropyl Alcohol (2-Propanol)(VWR P/N JT9334-3)
* Alconox Detergent (VWR P/N 21835-032)
* Scrub brushes and source of tap water (Local Purchase)
* Wash buckets or tubs/pans, ~5-gal. size (Local Purchase)
* Field logbooks (Sample Logbook and Field Sampler's Notebook)
* 200 ft. tape, Lufkin 1708D (Forestry Suppliers P/N 39961)
* Surveyors stakes (Forestry Suppliers P/N 39514)
* Marking pens, such as Sharpies and Mean Streaks
* Chain-of-custody Forms (OHM Supplied)
* Compass, Silva (Type 3, 7, 20) (Forestry Suppliers or Local Purchase)
* Other OHM or site specific forms as required per CSAP
* Calculator, pocket size (Local or Individual Purchase)
* Mechanical pencil and graph paper (Local or Individual Purchase)

8.3 Specific requirements of the site sampling and analytical plan may add to or delete from the above list.

9.0 ATTACHMENTS

Figure 9-1 Trier and Waste Pile Sampler

Figure 9-2 Split Spoon Sampler

Figure 9-3 Tube-type Corer and Bucket Auger

© Copyright 1994 OHM Remediation Services Corp.

FIGURE 9-1

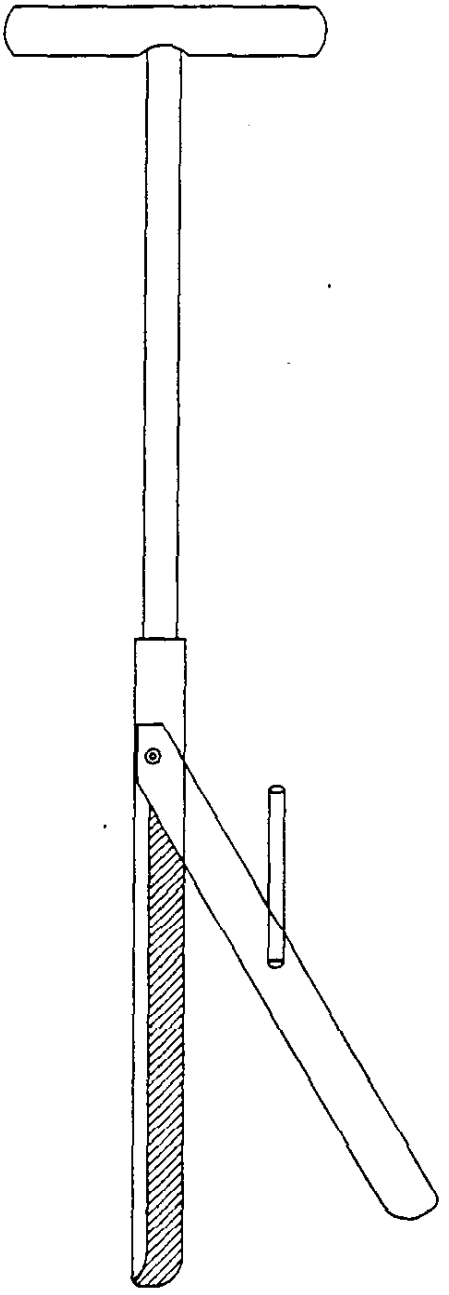

TRIER AND WASTE PILE SAMPLER

General Notes:

FIGURE NUMBER

DRAWING TITLE

PROJECT NAME
PROJECT LOCATION

PREPARED FOR

CLIENT NAME
CLIENT LOCATION

OHM Corporation
Findlay, Ohio

Drawn By: L DUHIGG	Checked By:
Date: 08/04/94	Approved By:
Scale: AS SHOWN	Drawing No: TUBE

FIGURE 9-2

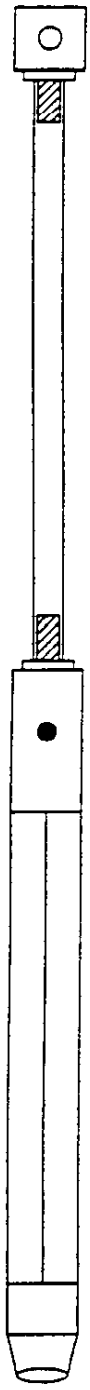

DRIVE HEAD

DRIVE ROD

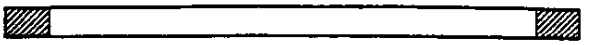

CONNECTOR

HEAD ASSEMBLY WITH WATER OUTLET

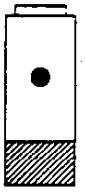

SPLIT TUBE

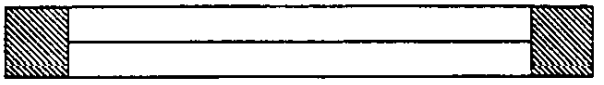

SHOE

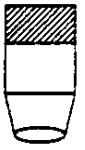

BASKET SCREEN

SPLIT SPOON SAMPLER

General Notes:

FIGURE NUMBER

DRAWING TITLE

PROJECT NAME
PROJECT LOCATION

PREPARED FOR

CLIENT NAME
CLIENT LOCATION

OHM Corporation
Findlay, Ohio

Drawn By: L DUHGG	Checked By:
Date: 10-22-92	Approved By:
Scale: AS SHOWN	Drawing No: 104040

FIGURE 9-3

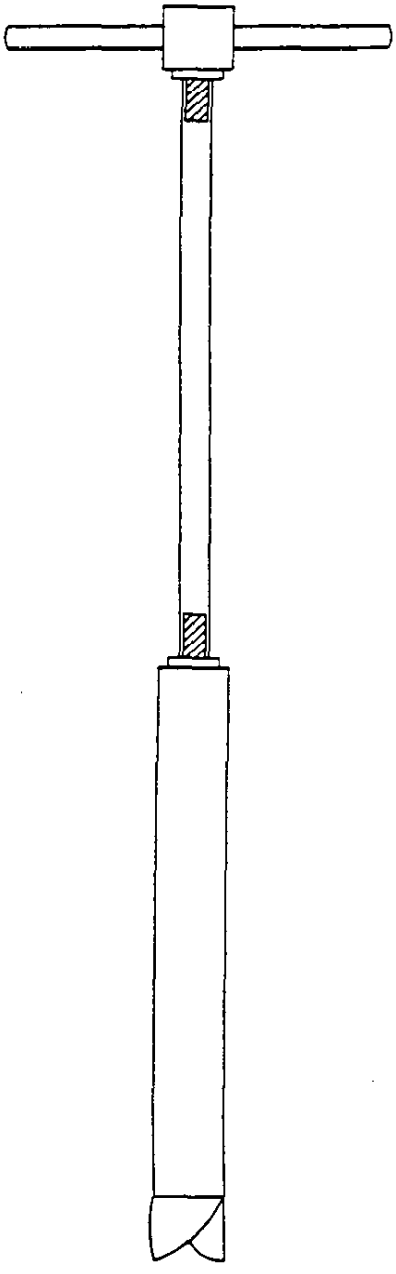

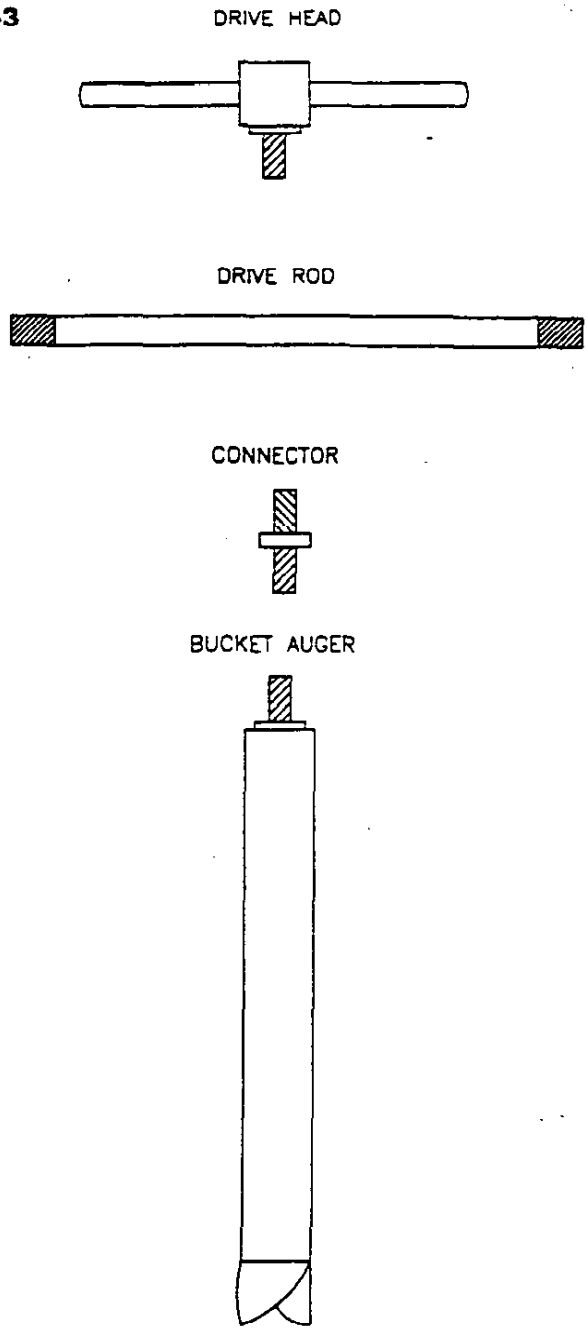

TUBE-TYPE CORER AND BUCKET AUGER

General Notes:

FIGURE NUMBER

DRAWING TITLE

PROJECT NAME
PROJECT LOCATION

PREPARED FOR

CLIENT NAME
CLIENT LOCATION

OHM Corporation
Findlay, Ohio

Drawn By: D. SCHILT	Checked By:
Date: 08-04-94	Approved By:
Scale: AS SHOWN	Drawing No: AUGER

OHM Corporation

QUALITY POLICY AND PROCEDURE APPROVAL AND REVISION RECORD

Document #	Title
QP-810	Drum Disposal

APPROVAL

Name	Title	Signature	Date
G. Jack Herzig	Mngr. Field Tech.		2/18/94
Terry L. Sole	Dir. Tech. Svcs.		2/18/94

REVISION RECORD

Ltr.	Date	Change Description	Initials						
1		Issue	-	-	-	-	-	-	-
2									
3									
4									
5									
6									
7									
8									
9									
10									
11									
12									
13									
14									
15									

hv = photon with an energy level equal to or greater than the ionization potential of RH.

4.2 The sensor consists of a sealed ultraviolet (UV) light source that emits photons with an energy level high enough to ionize many trace species, particularly organics, but not high enough to ionize the major components of air, O_2, N_2, CO, CO_2 or H_2O.

4.3 A chamber exposed to the light source contains a pair of electrodes, one a bias electrode and the second a collector electrode. When a positive potential is applied to the bias electrode a field is created in the chamber. Ions formed by the absorption of photons are driven to the collector electrode. The current produced is then measured and the corresponding concentration displayed on a meter directly in parts per million (ppm).

4.4 Ionization Potentials

4.4.1 Gases with ionization potentials near to or less than that of the lamp will be ionized. These gases will thus be detected and measured by the analyzer. Gases with ionization potentials higher than that of the lamp will not be detected.

4.4.2 The ionization potential of the major components of air, i.e., nitrogen, oxygen and carbon dioxide range from about 12.0 eV to about 15.6 eV and are not ionized by any of the three lamps.

4.4.3 Gases with ionization potentials near to or slightly higher than the lamp are partially ionized and will be detected, but only if high concentrations of the gas are present.

4.5 Ionization Sensitivity

4.5.1 The amount of ionization of a species of gas exposed to photons, its sensitivity, is a characteristic of that particular species. The species with the high values are more sensitive to the 10.2 eV lamp than are those with lower values. For example, an analyzer calibrated for benzene, when measuring a sample containing 10 ppm of benzene will read 10.0 and when measuring a sample containing 10 ppm of vinyl chloride will read 5.0. This shows the lower sensitivity of the vinyl chloride. Similar conditions are the case for the 9.5 and 11.7 eV lamps.

© Copyright 1993 OHM Remediation Services Corp.

OHM Corporation

STANDARD OPERATING PROCEDURE

Title: Drum Disposal **Document #:** QP-810

Date Issued: February 18, 1994 **Rev:** 0 **Date:** February 18, 1994

1.0 PURPOSE

1.1 To establish materials and construction requirements for removing, emptying, and/or crushing drums at the project site.

1.2 Ensure that all drums at the project site are disposed of in a safe and efficient manner.

2.0 SCOPE

2.1 This procedure is applicable to solid and liquid waste management and excavation, trenching, and backfilling.

3.0 RELATED DOCUMENTS

None

4.0 GENERAL INFORMATION

None

5.0 DEFINITIONS

5.1 Drummed Waste - Waste contained within the drum in either liquid or solid form.

5.2 Disposal Solid - All materials which are not in liquid form that are to be disposed.

© Copyright 1994 OHM Remediation Services Corp.

7.1.14 The analyzer is now operational.

7.1.15 Hold the probe so that the extension is at the point where the measurement is to be made. The instrument measures the concentration by drawing the gas at the end of the extension, through the ionization chamber, and out of the handle end of the probe.

WARNING

The instrument measures gases in the vicinity of the operator and a high reading when measuring toxic or explosive gases should be cause for action for operator safety.

7.1.16 Take reading or readings as desired taking into account that air currents or drafts in the vicinity of the probe tip may cause fluctuations in readings. Change the ranges as required.

7.1.17 Check battery condition as required. If the Low Battery Indicator comes on, turn analyzer off and recharge.

CAUTION

Use only in an emergency with a low battery when on battery charge.

7.1.18 After completion of use, check battery condition as described in paragraph 7.

7.1.19 Turn function switch to OFF position.

7.1.20 When not operating, leave analyzer in assembled condition, and connected to battery charger.

7.1.21 When transporting, disassemble probe and extension from readout assembly and return equipment to its stored condition.

7.1.22 In case of emergency, turn function switch to OFF position.

© Copyright 1993 OHM Remediation Services Corp.

6.0 RESPONSIBILITIES

6.1 The project manager shall submit, as part of the Work Plan, the manner and/or methods used to remove, handle, transport, and open drums.

7.0 PROCEDURES

7.1 Drums shall be properly handled by the following procedures to minimize the potential for personal injury or damage to the drums.

7.1.1 A visual inspection of every drum shall be performed prior to removing the drum for remediation. The drum shall be checked for leakage, bulging, corrosion, and structural integrity. If a drum displays any of the aforementioned symptoms, it shall be marked so that the appropriate precautions can be enacted before it is removed.

7.1.2 Prior to the movement of any drummed waste, employees involved in the drum transfer or movement shall be advised of the potential hazards associated with their contents. Levels of personal protection shall be based on the Health and Safety Plan.

7.1.3 Employees shall not stand upon or work from drums.

7.1.4 Employees not involved in drum disposal operations shall be kept a safe distance from the drums while they are being handled.

7.1.5 Monitoring equipment and fire suppression equipment shall be readily accessible while drums are being handled.

7.1.6 Included in the Work Plan shall be the location of spill containment devices (berms, etc.).

7.1.7 All work involving opening or crushing of drums shall be performed within the limits of the specified area designated for this activity.

8.0 EQUIPMENT

None

© Copyright 1994 OHM Remediation Services Corp.

OHM Corporation

STANDARD OPERATING PROCEDURE

Title: Structural Excavation, Backfill and Compaction

Document #: QP-820

Date Issued: 16 FEB 94

Rev: 0 **Date:** February 16, 1994

1.0 PURPOSE

1.1 To provide the general requirements for structural excavation, backfill and compaction required for the material and installation,as required,to complete the work.

2.0 SCOPE

2.1 This procedure is applicable to excavation projects.

3.0 RELATED DOCUMENTS

3.1 Codes, Specifications and Standards Codes, specifications and standards referred to by number or title will form a part of this specification to:

3.1.1 American Society for Testing and Material (ASTM):

3.1.1.1 ASTM C136 - Method for Sieve Analysis of Fine and Coarse Aggregates

3.1.1.2 ASTM D698 - Moisture-Density Relations of Soil and Soil Aggregate Mixtures Using SPound (2.27-kg) Rammer and 12-inch(505 mm) Drop.

3.1.1.3 ASTM D2487 - Classification of Soil for Engineering Purposes.

© Copyright 1994 OHM Remediation Services Corp.

OHM Corporation

QUALITY POLICY AND PROCEDURE APPROVAL AND REVISION RECORD

Document #	Title
QP-820	Structural Excavation, Backfill, and Compaction

APPROVAL

Name	Title	Signature	Date
G. Jack Herzig	Mngr. Field Tech.	G. Jack Herzig	2/16/94
Terry L. Sole	Dir. Tech. Svcs.	Terry Sole	2/16/94

REVISION RECORD

Ltr.	Date	Change Description	Initials						
1		Issue	-	-	-	-	-	-	-
2									
3									
4									
5									
6									
7									
8									
9									
10									
11									
12									
13									
14									
15									

3.1.1.4 ASTM D2922 - Density of Soil and Soil-Aggregate in Place by Nuclear Methods (Shallow Depth)

3.1.1.5 ASTM D3017 - Moisture Content of Soil and Soil Aggregate in Place by Nuclear Methods (Shallow Depth)

3.1.1.6 ASTM 4318 - Liquid Limit, Plastic Limit,and Plasticity Index of Soil

3.1.2 Code of Federal Register (CFR):

3.1.2.1 29 CFR Part 1926 - Occupational Safety and Health Standards - Excavation.

4.0 GENERAL INFORMATION

4.1 Work described in this section will not be performed when, in the opinion of the engineer, the weather conditions are inappropriate.

4.2 No backfill or compaction, in or with muddy or frozen material will be allowed.

5.0 DEFINITIONS

5.1 Unclassified Excavation - Unclassified excavation includes all material encountered on site, including, but not limited to, earth, gravel, and all such hard and compact materials as hardpan and bedrock.

5.2 Structural Backfill Material

5.2.1 Structural backfill material will be imported from an approved borrow source. Source will be developed and tested by the engineer. If material conditions of the borrow source change, the material will be retested and reapproved by the engineer, or a new borrow source will be developed, tested, and approved as was the first.

5.2.2 Structural backfill will be free from organics, wood, free of frozen material, large clods or stones over 3-inches in diameter, debris or other organic material.

© Copyright 1994 OHM Remediation Services Corp.

5.3 Base Course Material

5.3.1 Base course material will meet the following requirements when tested in accordance with ASTM C136:

Sieve Designation	% Passing By Weight
1½ Inch	100
¾ Inch	40-100
⅜ Inch	30-75
No. 4	25-60
No. 10	20-43
No. 40	8-26
No. 200	4-12

5.3.2 Base course material passing the No. 40 sieve will have a plasticity index not exceeding 6 and a liquid limit not exceeding 25 when tested in accordance with ASTM D4318.

5.4 Sand Material - Sand material will be crushed stone, crushed slag, crushed gravel, or natural sand having a maximum liquid limit of 35 and a maximum plasticity index of 6 when tested in accordance with ASTM D4318, and the following gradation:

Sieve Designation	% Passing By Weight
No. 8	100
No. 16	85-100
No. 50	15-100
No. 100	0-60
No. 200	0-2

© Copyright 1994 OHM Remediation Services Corp.

5.5 3/4" Gravel - 3/4" gravel material will be crushed stone, crushed slag, or crushed gravel having the following gradation:

Sieve Designation	% Passing By Weight
1 Inch	100
¾ Inch	0-40
½ Inch	0-20
No. 200	0-3

6.0 RESPONSIBILITIES

6.1 The engineer will prepare the drawing according to site activities. The project manager will submit, as part of the Work Plan, the manner and methods for this activity.

7.0 PROCEDURE

7.1 Preparation

7.1.1 Dewatering of excavations will be provided to prevent sloughing and destabilization of the excavation bottom.

7.1.2 The engineer will direct surface drainage away from excavations to prevent erosion and undermining. Diversion ditches, dikes, hay bales, silt fencing, and grading will be provided and maintained as necessary during construction.

7.2 Excavation

7.2.1 Excavations will be constructed in accordance with 29 CFR Part 1926.

7.2.2 Structural excavations will be constructed to the lines and grades required for the concrete foundations and structures, base course, and/or sand.

© Copyright 1994 OHM Remediation Services Corp.

7.2.3 Final grade will not be excavated until just before concrete is to be placed.

7.2.4 Unsatisfactory material in surfaces to receive fill or in excavated areas will be removed and replaced with base course.

7.3 Backfill

7.3.1 No backfill materials will be placed until the foundation has been suitably dewatered and prepared as specified herein.

7.3.2 The foundation subgrade will be moistened and compacted to the requirements of this Section. In-place moisture content of the subgrade will be as required to achieve the compaction required.

7.3.3 All structural backfill and base course will be placed and spread in uniform layers not exceeding 8 inch loose lifts.

7.3.4 Sand will be placed in a single layer.

7.4 Compaction

7.4.1 Moisture content of the structural backfill, base course and sand will be within 3 percent of optimum moisture content at the time of compaction. Moisture condition or dry as required.

7.4.2 Compact each layer of fill to 98 percent of maximum dry density when tested by ASTM D698.

7.5 Quality Control

7.5.1 Moisture content and compaction will be tested in accordance with ASTM D3017 and ASTM D2922, respectively, for every 50 cubic yards of fill placed and compacted.

8.0 EQUIPMENT

None

© Copyright 1994 OHM Remediation Services Corp.

9.0 ATTACHMENTS

None

© Copyright 1994 OHM Remediation Services Corp.

OHM Corporation

QUALITY POLICY AND PROCEDURE APPROVAL AND REVISION RECORD

Document #	Title
QP-1000	Transportation & Disposal

APPROVAL

Name	Title	Signature	Date
Julius Montgomery	T&D Manager		7/22/94
G. Jack Herzig	Mngr. Field Tech.		7/22/94
Terry L. Sole	Dir. Tech. Svcs.		7/22/94

REVISION RECORD

Ltr.	Date	Change Description	Initials						
1		Issue	-	-	-	-	-	-	-
2									
3									
4									
5									
6									
7									
8									
9									
10									
11									
12									
13									

STANDARD OPERATING PROCEDURES

Title: Transportation & Disposal **Document #:** QP-1000

Date Issued: July 22, 1994 **Rev:** 0 **Date:** July 22, 1994

1.0 OBJECTIVE

1.1 To establish guidelines and procedures for procurement of Transportation and Disposal services in the Midwest Region.

2.0 SCOPE

2.1 All employees at the Midwest Region offices, facilities, and operations.

2.2 All projects and proposals requiring transportation and disposal services and/or price quotations for such services.

3.0 POLICY

3.1 All projects and proposals requiring procurement of, or the price quotation of, transportation and disposal services will make their requests in the prescribed format.

3.2 All requests for transportation and disposal services or price quotation will be reviewed and approved by the Regional Transportation and Disposal Services Department prior to procurement or price quotation.

3.3 The Project/Proposal Manager will establish with the Regional Transportation and Disposal Services Group a procedure for the development of a site specific **Waste Management Plan prior to the commencement** of on-site disposal activities.

© Copyright 1994 OHM Remediation Services Corp.

3.4 Changes to transportation and disposal services must be made **in writing** with prior review and approval of the Regional Transportation and Disposal Services Department.

3.5 The Regional Transportation and Disposal Services Department will audit and approve transporters and TS&D facilities for use as approved subcontractors.

3.6 The Project Manager will establish with the Regional Transportation and Disposal Services Group to have a trained and authorized Hazardous Waste Coordinator or Manager present on site at the time of shipment.

3.7 After the date of issuance of this policy, purchase orders for transportation and disposal services will not be authorized unless the selected contractor has been provided with a letter of Notification of Award from the Transportation and Disposal Services Department.

4.0 GENERAL INFORMATION

4.1 Exceptions

4.1.1 Emergency Response - The project manager will fill out a Disposal Information Form and Submit it to the Regional Manager, Transportation and Disposal.

5.0 DEFINITIONS

None

6.0 RESPONSIBILITIES

None

7.0 PROCEDURE

7.1 The policies and procedures detailed in this document are to be followed by all OHM Remediation Services, Midwest Region employees. Failure to adhere to these Policies and Procedures will result in disciplinary action up to and including termination.

© Copyright 1994 OHM Remediation Services Corp.

7.2 This document details the policies and procedures to be followed for procuring transportation and disposal services for OHM Midwest projects. These procedures begin with the recognition of a project opportunity and continue through the project to the disposal report. The proper steps are illustrated in Figure #1:

7.3 Proposal Opportunity

7.3.1 Once the proposal group has recognized an opportunity which requires transportation and disposal tasks, the Proposal Manager will submit to the Midwest Transportation and Disposal Department a copy of the Request for Proposal (RFP) and a signed Work Request to the Transportation and Disposal Manager.

Opportunities for which transportation and disposal activities are to be performed by the client or by a third party must be verified and approved by the Regional Transportation and Disposal Manager (TDM).

7.3.2 The TDM reviews the Work Order Form for completeness, the RFP, and assigns the Hazardous Waste Manager (HWM). The HWM will be dedicated to the proposal team until the proposal activity concerning the transportation and disposal tasks are complete.

7.4 Proposal Activities

7.4.1 The assigned HWM will work with the proposal team to define all Transportation, Disposal, and Waste Management functions required to successfully complete the proposed project. The HWM will be responsible for assuring the proposal team has defined all of the required transportation and disposal activities for the project. The HWM will review the RFP and complete a T&D Summary Form (see Attachment 2). The T&D Summary Form will include:

7.4.1.1 All identified waste streams requiring transportation and disposal activities.

7.4.1.2 The disposal options available for each waste stream.

© Copyright 1994 OHM Remediation Services Corp.

7.4.1.3 Any specific regulatory or disposal firm requirements applicable to each identified waste stream.

7.4.1.4 The sampling and analytical requirements for each waste stream.

7.4.2 The T&D Summary Form will be submitted to the proposal manager for his/her review and approval. The proposal manager will assure all known or anticipated waste streams are included on the T&D Summary Form. The HWM and the proposal manager will discuss and eliminate disposal options which do not conform to the proposed project activities.

7.4.3 Once the transportation and disposal activities are identified, the TSD Summary Form will be reviewed and signed by the HWM and will complete both the TSD Request for Quotation (TSDRFQ) and the Transportation Request For Quotation (TRFQ) (see Attachments 3 & 4).

7.5 Procurement Activities ($2500.00 or less)

7.5.1 For procurement activities of $2500.00 dollars or less, the HWM will select the vendors to be utilized. The HWM will contact the selected vendors to discuss capabilities, scheduling, and regulatory requirements. The HWM will submit the TSDRFQ and TRFQ forms to the selected vendors for price quotation.

7.5.2 After the price quotations are received they will be reviewed by the HWM to assure the quotations are responsive and complete. The HWM will transfer the data to the TSD and Transportation Quotation Summary Forms (see Attachments 5 & 6) prior to release to the proposal manager.

7.6 Procurement Activities (over $2500.00)

7.6.1 For procurement activities over $2500.00 dollars, a procurement representative will select the vendors to be utilized. The procurement representative will contact the selected vendors to discuss capabilities,

© Copyright 1994 OHM Remediation Services Corp.

scheduling, and regulatory requirements. The procurement representative will submit the TSDRFQ and TRFQ forms to the selected vendors for price quotation.

7.6.2 After the price quotations are received they will be reviewed by the procurement representative to assure the quotations are responsive and complete. The procurement representative will transfer the data to the TSD and Transportation Quotation Summary Forms (see Attachments 5 & 6) prior to release to the proposal manager.

7.6.3 The HWM will generate an estimate for the writing of a Site Specific Waste Management Plan (WMP) for all proposed projects requiring transportation and disposal activities (see Attachment 7). The HWM will be responsible for the scoping, writing, and final approval of the technical approach of the project concerning all transportation and disposal activities. A Hazardous Waste Coordinator (HWC) will be included in every project estimate for which a waste stream is being shipped from site. **NO WASTE SHIPMENT WILL BE MADE WITHOUT AN HWM OR HWC PRESENT ON THE PROJECT SITE.** If a project requires extensive transportation and disposal activities or when the transportation and disposal is a critical activity to the success of the project, a full-time HWC will be assigned to the project.

7.7. Project Award

7.7.1 Once a project has been awarded to OHM, a Project Manager and a project number will be assigned. The Project Manager will submit to the Midwest Regional Transportation and Disposal Manager a Work Request and a copy of the proposal. **On Emergency Response jobs, a "Disposal Information Requirements Form" (see Attachment 8) will be completed by the Project Manager and submitted to the Manager.** The Transportation and Disposal Manager will assign an HWM. The HWM will be dedicated to the project management team until the project is completed.

7.7.3 The site specific WMP will be written by the HWM. **A WMP must be written and followed for every planned project transportation and disposal that is procured by OHM personnel. Under no**

© Copyright 1994 OHM Remediation Services Corp.

circumstances will OHM personnel perform transportation and disposal without an approved WMP. The WMP will be submitted for review and approved by the Manager of Transportation and Disposal prior to submittal to the Project Manager and client. **For government contracts the WMP must be reviewed by the Contract Regulatory Specialist (CRS).**

7.7.4 After the client approves the WMP, the HWM will coordinate with the Manager of Field Analytical to complete all the Analytical Requests Forms (ARFs) in accordance to Policy Number MWTS 001 for each of the disposal activities. A copy of these ARFs will be attached to the WMP.

7.7.5 Upon awarding the Transportation and Disposal contracts, the Midwest Purchasing Department will send to the TS&D Facility a LETTER OF INTENT (see attachment 9). The Purchase Order will be attached to the Notice of Award Form. All approved Transportation and TS&D subcontractors will be instructed to contact the Manager of Purchasing if a Purchase Order is received without a LETTER OF INTENT.

7.7.6 If an on site HWC has been included in the project estimate, the HWM and the Manager of Transportation and Disposal will select the HWC. The Project Manager and the HWM will conduct a kick-off meeting briefing the HWC of site-specific requirements related to transportation and disposal issues. The HWC will receive a copy of the WMP, Sampling and Analysis Plan (SAP), Quality Assurance Project Plan (QAPP), and copies of all ARF's related to disposal activities.

7.7.7 The HWC will assure that all labels, placards, and other packing materials required for disposal activities on the project are dispatched or has filled out a Purchase Requisition for their purchase to be drop shipped to the project location.

7.7.8 The HWM will generate the Preshipment Checklist, a Drum Preshipment Checklist, and a Drum Preshipment Inspection Form (see Attachments 10,11, and 12), manifest, and other documents. The forms will be forwarded to the client for review and approval, and then to the HWC on site. The HWC will be mobilized with the forms to the site to assure the shipment of the waste meets federal, state, and DOT

© Copyright 1994 OHM Remediation Services Corp.

requirements. **IF REGULATIONS CANNOT BE MET, THEN THE SHIPMENT WILL BE CANCELED UNTIL THE REQUIREMENTS CAN BE MET.**

7.7.9 A copy of the completed preshipment forms will be sent to the HWM and the original will be kept in the project file.

7.8 Project Activities

7.8.1 After mobilization of the project staff to the site, the HWM will coordinate the transportation and disposal activities with the HWC and/or the Site Supervisor. During the execution of a transportation and disposal event, the HWC is responsible to insure all activities are in accordance with the WMP. If a modification is required, the HWM must be immediately notified.

7.8.2 The HWC or Site Supervisor will generate the required modifications and submit them to the HWM for approval. The HWM will generate, in writing, the required modifications and submit them to the HWC, Project Manager, and Site Supervisor. These modifications will be attached to the original WMP as an addendum.

7.8.3 As a waste stream is generated, sampling and analysis will be required. The sampling will be collected in accordance to the SAP. If a HWC is on site, the sampling will be conducted under his/her supervision. A Chain-of-Custody (COC) will be completed and the samples packaged for shipment to the selected laboratory indicated on the ARF. The HWC, Project Chemist, or the Senior Sampling Technologist will review the COC and complete the Sampling Shipment Check List. THE FOLLOWING ITEMS MUST BE INCLUDED WITH THE SAMPLE SHIPMENT:

7.8.3.1 A properly completed COC Form

7.8.3.2 A sample log for every sample shipped

7.8.3.3 A copy of the ARF

7.8.3.4 A copy of the SAP and QAPP

© Copyright 1994 OHM Remediation Services Corp.

7.8.4 **If one or more of these forms are missing, the selected laboratory has been instructed to immediately notify the Technical Quality Assurance Officer (TQAO) and not to perform the requested analyses. If the Analyses are performed without notification of the TQAO, the laboratory will not be paid for those unauthorized services.**

7.8.5 If problems are encountered by the laboratory concerning the above documentation, or in performing the desired analyses, they will contact the TQAO. The TQAO will notify the HWM, Project Manager, Project Chemist, HWC, Senior Sampling Technologist, and Site Supervisor of the problem and the required resolutions. If additional sampling and/or analyses are required, TQAO will generate the ARFs.

7.8.6 If all of the proper documentation is received with the samples, the laboratory will be authorized to perform the analyses indicated on the ARF. At the completion of an analytical event, the laboratory will send the reports to the TQAO. The TQAO will review the reports in a manner consistent with the requested turn-around time, verify that the requested analytical was performed to the quality standards defined in the QAPP, generate a memo stating their findings, and forward copies of the memo and analytical report to the PM and HWM.

7.8.7 Once the analytical task is completed, the HWM will fill out the Waste Profiles and other appropriate documents. These documents will be forwarded to the Client or Client's representative for review and signature. **UNDER NO CIRCUMSTANCES WILL AN OHM EMPLOYEE SIGN A PROFILE OR MANIFEST FOR THE CLIENT AS THE GENERATOR.**

7.8.8 The documents, along with a sample, will be submitted to the selected disposal firms for final quotations. These quotations will be reviewed and approved by the HWM to assure the quotations are responsive and complete. The HWM will transfer the data to a TSD and Transportation Quotation Summary Form prior to submittal to the PM. **All Purchase Orders for Transportation and Disposal will be issued from the Regional Purchasing Department.** The Project Manager will present this data to the client for selection of the Transporter and the TS&D Facility.

© Copyright 1994 OHM Remediation Services Corp.

7.8.9 The HWC will provide a weekly Quality Assurance Package to the HWM, format to be determined by the project type, HWM, and HWC. The HWM will perform Site-Specific Quality Assurance Audits, as needed, to assure conformance to the protocols and procedures detailed in the WMP.

7.8.10 At the completion of the site activities, the HWM will compile all returned manifests and additional tracking information and generate a final Waste Management Report. The Waste Management Report will be reviewed by the Regional Transportation and Disposal Manager for approval. The Waste Management Report will be released to the Project Manager for inclusion of his/her Final Report to the client.

8.0 EQUIPMENT

None

9.0 ATTACHMENTS

* Transportation and Disposal Flow Chart (Figure #1)
* OHM Corporation Work Order (Attachment 1)
* Transportation and Disposal Summary Form (Attachment 2)
* TSD Request for Quotation (Attachment 3)
* Transportation Quotation (Attachment 4)
* TSD Quotation Summary Form (Attachment 5)
* Transportation Quotation Summary (Attachment 6)
* Site-Specific Waste Management Plan (Attachment 7)
* Disposal Information Requirements (Attachment 8)
* Letter of Intent (Attachment 9)

© Copyright 1994 OHM Remediation Services Corp.

* Preshipment Certification Form (Attachment 10)
* Drum Preshipment Certification Form (Attachment 11)
* Drum Preshipment Inspection Form (Attachment 12)

© Copyright 1994 OHM Remediation Services Corp.

RETURN TO: _____

RECORD ACTUAL HOURS WORKED IN SPACE PROVIDED.

OHM Corporation

WORK ORDER

TECHNICAL SERVICES

MIDWEST REGION

WORK ORDER NO:

REQUESTED BY: DATE REQUESTED:

TITLE: PHONE NUMBER:

TYPE OF REQUEST: PERSONNEL REQUESTED:

PROJECT NUMBER: TASK NUMBER:

CLIENT NAME: CONTACT: PHONE:

STREET: CITY: STATE: ZIP:

PROJECT LOCATION: PROJECT NAME:

TASK DESCRIPTION:

DESIRED COMPLETION DATE:

PERSONNEL ASSIGNED: DATE ASSIGNED:

ACTUAL DATE STARTED: ACTUAL COMPLETION DATE:

HOURS QUOTED: ACTUAL HOURS WORKED: DIFFERENCE:

PROBLEMS AND RESOLUTIONS:

MIDWEST TECH. SERVICES MANAGEMENT PROJ. ☐ PROP. ☐

SIGNATURE: SIGNATURE:

Transportation and Disposal Summary Form

OHM Corporation

Page _____ of _____

Revision No. _____

Project Name:	Project Location:	Proposal Number:	Date Received:
Generator:	Proposal Manager:	PM's Phone Number:	T & D Coordinator:
Project Start Date:	Date Due:	Date Completed:	Time Completed:
PM's Approval:	Date: Time:	TDC's Approval:	Date: Time:

Physical State	Waste Description (Process of Generation)	Waste Codes	Disposal Method	Volume	units	Shipping Containers[1]	Comments

1 D-Drums B-Bulk Liquids RO-Roll Offs DT-Dump Trucks RR-Rail Cars O-Other

TSD Request for Quotation

OHM Corporation

Page _____ of _____

Revision No:_____

Project Name:	**Project Location:**	**Proposal Number:**	**Date Received:**
Generator:	**Proposal Manager:**	**PM's Phone Number:**	**T & D Coordinator:**
Project Start Date:	**Date Due:**	**Date Completed:**	**Time Completed:**
PM's Approval:	**Date:** **Time:**	**TDC's Approval:**	**Date:** **Time:**

	TSD Facility #1	TSD Facility #2	TSD Facility #3
TSD Facility			
Street Address			
City, State			
Phone Number			
TSD Contact			
Submittal Date			
Date Received			
Disposal Cost (inc tax)			
Units (tons, yards, drums)			
Approval Fee			
Analytical Required (y/n)			
Bid Complete and Accurate			
TSD Facility Awarded			
Reason for Award			

ATTACHMENT 4

TRANSPORTATION QUOTATION

Transportation Quotation

OHM Corporation
Page _____ of _____
Revision No:_____

Project Name:	**Project Location:**	**Proposal Number:**	**Date Received:**
Generator:	**Proposal Manager:**	**PM's Phone Number:**	**T & D Coordinator:**
Project Start Date:	**Date Bid Due:**	**Date Completed:**	**Time Completed:**
PM's Approval:	**Date:** **Time:**	**TDC's Approval:**	**Date:** **Time:**

Load Description: | Wastestream: of

Origin City: | Destination Facility/City:

Equipment Required: [ ] Vans [ ] Liquid Tankers [ ] Roll Offs [ ] Dump Trucks [ ] Rail Cars [ ] Other:

Waste Volume: _____ [ ] Tons [ ] Cubic Yards
[ ] Gallons [ ] Drums

Frequency: per

Required Route:

Bid Requirements:

Transportation Quotation

OHM Corporation
Page _____ of _____
Revision No:_____

Project Name:	**Project Location:**	**Proposal Number:**	**Date Received:**
Generator:	**Proposal Manager:**	**PM's Phone Number:**	**T & D Coordinator:**
Project Start Date:	**Date Due:**	**Date Completed:**	**Time Completed:**
PM's Approval:	**Date:** **Time:**	**TDC's Approval:**	**Date:** **Time:**

	Transporter #1	Transporter #2	Transporter #3
Transporter			
Street Address			
City, State			
Phone Number			
Transporter Contact			
Submittal Date			
Date Received			
Transportation Cost(inc. tax)			
Units (per mile, per hour)			
Demurrage			
Permits Required (y/n)			
Transporter Awarded			

ATTACHMENT 5

TSD QUOTATION SUMMARY FORM

Transportation Quotation Summary

OHM Corporation
Page _____ of _____
Revision No:_____

Project Name:	**Project Location:**	**Proposal Number:**	**Date Received:**
Generator:	**Proposal Manager:**	**PM's Phone Number:**	**T & D Coordinator:**
Project Start Date:	**Date Due:**	**Date Completed:**	**Time Completed:**
PM's Approval:	**Date:** **Time:**	**TDC's Approval:**	**Date:** **Time:**

	Transporter #1	Transporter #2	Transporter #3
Transporter			
Street Address			
City, State			
Phone Number			
Transporter Contact			
Submittal Date			
Date Received			
Transportation Cost(inc. tax)			
Units (per mile, per hour)			
Demurrage			
Permits Required (y/n)			
Transporter Awarded			

ATTACHMENT 6

TRANSPORTATION QUOTATION SUMMARY

TSD Quotation Summary Form

OHM Corporation

Page _____ of _____

Revision No:_____

Project Name:	**Project Location:**	**Proposal Number:**	**Date Received:**
Generator:	**Proposal Manager:**	**PM's Phone Number:**	**T & D Coordinator:**
Project Start Date:	**Date Due:**	**Date Completed:**	**Time Completed:**
PM's Approval:	**Date:** **Time:**	**TDC's Approval:**	**Date:** **Time:**

	TSD Facility #1	TSD Facility #2	TSD Facility #3
TSD Facility			
Street Address			
City, State			
Phone Number			
TSD Contact			
Submittal Date			
Date Received			
Disposal Cost (inc tax)			
Units (tons, yards, drums)			
Approval Fee			
Analytical Required (y/n)			
Bid Complete and Accurate			
TSD Facility Awarded			
Reason for Award			

ATTACHMENT 7

SITE-SPECIFIC WASTE MANAGEMENT PLAN

SITE SPECIFIC WASTE MANAGEMENT PLAN INSTRUCTIONS

1.0 INTRODUCTION

This section will include a description of the work site and any unusual conditions. Anticipated project start and completion dates will be estimated. This section will also provide a summary of past and future work at the site including past chemical data of significance as well as a presentation of the multi-media sampling that was completed during the site visit or that is required for disposal purposes in the present work effort. Some specifics include:

- o Contract reference
- o Site Name and Location reference
- o Description and intention of the plan

Work activities will be related to waste management activities in chronological order and bulletized for ease of reference.

1.1 SITE HISTORY

This section will include a brief discussion of the site background and history relating to the proposed Work Plan, Sampling Plan, and Waste Management Plan.

It will include the Generator's name, Point-of-Contact, site address, mailing address, ~~site address~~ alt, EPA ID and State ID numbers, Project Number, and significant points of contact such as; Project Manager, Supervisor, Hazardous Waste Coordinator, Hazardous Waste Manager, Regulatory Contract Specialist, etc.

Details of processes performed at facility and/or generating the waste are important items to be covered as well.

1.2 WASTE ON SITE

Include here are the waste codes related to processes of generation, anticipated or actual volumes, disposal methodology, and packaging. Bullet items will be given in correlation with work activities described in section 1.0.

2.0 PROCUREMENT OF VENDORS

This will be mostly generic SOP wording on OHM's policies relating to procurement of TSD vendors, how they are solicited and selected. Auditing of facilities will be mentioned.

2.1 DISPOSAL FIRMS

The type of services required for completion of the project, bidding requirements, written bid requirements, and other procurement specifics for disposal firms. Also, the Notice of Violation reports and/or most recent audits of facilities considered for award.

2.2 TRANSPORTERS

This section will include the SOP for the process of selection of transporters. Receipt of current licenses, permits needed, and Notice of Violation reports are available. Quotes are to be in writing.

2.3 VERIFICATION OF PROPOSAL PRICING

This section will include OHM SOP's verifying that the price given in the proposal are still valid. Also, if the volume has increased due to more site information, or the waste codes have changed, re-quoting and negotiations for better pricing will be pursued.

3.0 SELECTED TSD FACILITIES

The TSD facilities discerned during the proposal phase will be included here. A brief description of their capabilities and scheduling situation will be included. Details such as EPA ID numbers, addresses, and points of contact will be clearly laid out. A table, including the TSD facility, Transporter, packaging, and frequency of shipment, would be helpful. Also, sample quantity requirements and where to send samples, profiles, etc. for quick approvals.

4.0 PACKAGING/HANDLING/CHARACTERIZATION

This section will include the detailed sampling and analytical requirements in both tabular and descriptive forms. It may simply refer to the appropriate section or SOP of the sampling plan, or copy it verbatim.

4.1 WASTE STREAM PACKAGING

This section will include as much detail as possible about the packaging of the waste. SOP's will be used if available. The size and type of containers (i.e. 20 yard rolloff

boxes, 2,000-pound nylon tote bags, 55-gallon 17C drums, etc.), and any restrictions as to contained volume or how the volume affects price (such as "rolloff boxes should never be loaded to more than 2/3 full) should be noted. The transporter(s) will be mentioned again and the anticipated or actual scheduling (trucks per day) and point of contact for the transporter for these arrangements.

Any special requirements contractually required such as clean shaven drivers, Michigan stickers on trailers, medical records inspection, and/or current logged hours will be noted. Staging, weighing, weigh tickets, and what-if-overloaded and what-if-turned-around scenarios will be included.

4.2 LABELING/PLACARDING REQUIREMENTS

A detailed explanation of how each container and vehicle will be marked for proper shipment.

4.3 DRUM/BULK STAGING AREA INSPECTIONS

Weekly inspection log completion, staging area requirements, primary and secondary staging protocols, etc., as they relate to waste management.

5.0 SCHEDULING/WASTE TRACKING

Time frame required for analytical, facility approval, and state, county, or city approvals and the paperwork required for each. Also, the quality control procedures utilized to ensure all loads of hazardous waste are properly tracked and are shipped utilizing the Preshipment Certification Forms.

5.1 TRACKING TO BE UTILIZED ON SITE

The forms and procedures required for this particular site to communicate the tracking and certification in a easily interpreted manner.

6.0 FINAL REPORT GENERATION

This section will include wording on the contents of the final waste management report. Totals will be given in tabular form.

6.1 GATHERING AND ORGANIZATION OF INFORMATION

This section will include the procedures, anticipated timing (with milestones), and efforts required to produce the document.

6.2 REPORT GENERATION

ATTACHMENT 8

DISPOSAL INFORMATION REQUIREMENTS

Disposal Information Requirements

OHM Corporation

Page _____ of _____
Revision No:_____

DATE:	PROJECT NO.:
PROJECT SUPERVISOR:	PROJECT MANAGER:
GENERATOR:	EPA ID NO.:
GENERATOR CONTACT:	TITLE:
PHONE:	24 HOUR ER NO.:
ADDRESS:	JOB SITE ADDRESS:
JOB SITE PHONE:	

WASTE GENERATED:

A. Description/Process Generating (include physical state:

Amt./How Containerized:

Sampled: [ ] YES [ ] NO Analyzed: [ ] YES [ ] NO Sample No.:

B. Description/Process Generating (include physical state)

Amt./How Containerized:

Sampled: [ ] YES [ ] NO Analyzed: [ ] YES [ ] NO Sample No.:

C. Description/Process Generating (include physical state)

Amt./How Containerized:

Sampled: [ ] YES [ ] NO Analyzed: [ ] YES [ ] NO Sample No.:

Any special price/time constraints or additional comments?

ATTACHMENT 9

LETTER OF INTENT

OHM Corporation

ABC Disposal Co.
123 West Landfill Hole
Aroma, MS 12345

RE: LETTER OF NOTIFICATION OF AWARD FOR WASTE DISPOSAL SERVICES.

Dear sir:

Based on your pricing dated 99/99/1993, OHM Remediation Services Corporation (OHM) is hereby issuing a Letter of Notification of Award for the disposal of an estimated _____ Tons/Yards of _____ at your facility in _____.

Enclosed you will find a copy of our Disposal Agreement which you are required to execute and return to OHM prior to your receipt of the waste. The Agreement constitutes the complete agreement between your firm and OHM. The quantities listed above and subsequently in our purchase order are only estimates, and OHM reserves the right to change such quantities as the scope of the project changes. Should there be an increase in the quantities, OHM will approach you to negotiate and adjust the pricing accordingly.

Should you have any questions regarding the letter or the Disposal Agreement, feel free to call me at (419) 424-4963.

Sincerely
Issa Toubbeh

Purchasing Manager

16406 U.S. Route 224 East ■ P.O. Box 551 ■ Findlay, Ohio 45839-0551 ■ 419-423-3526