89114

REAC

AREA 7 GEOPROBE CHARACTERIZATION REPORT
WASTE DISPOSAL, INC. SITE
SANTA FE SPRINGS, CA
DECEMBER 1999

Original document prepared under:

U.S. EPA Work Assignment No.: 3-304
Weston Work Order No.: 03347-143-001-3304-01
U.S. EPA Contract No.: 68-C4-0022

UNITED STATES ENVIRONMENTAL PROTECTION AGENCY
ENVIRONMENTAL RESPONSE TEAM
EPA

OFFICE OF EMERGENCY AND REMEDIAL RESPONSE

SFUND RECORDS CTR
89114

AREA 7 GEOPROBE CHARACTERIZATION REPORT
WASTE DISPOSAL, INC. SITE
SANTA FE SPRINGS, CA
DECEMBER 1999

Original document prepared under:

U.S. EPA Work Assignment No.: 3-304
Weston Work Order No.: 03347-143-001-3304-01
U.S. EPA Contract No.: 68-C4-0022

Document revised June 2000 under:

U.S. EPA Work Assignment No.: 0-085
Lockheed Martin Work Order No.: RIA00085
U.S. EPA Contract No. 68-C9-223

Prepared by:

Lockheed Martin./REAC

Ken Woodruff
REAC Senior Geologist

6/6/00
Date

Steven A. Clapp
REAC Program Manager

6/7/00
Date

Prepared for:

U.S. EPA/ERTC

William Coakley
Work Assignment Manager

1.0 INTRODUCTION

1.1 Background

1.1.1 Site Background

Work Assignment # 3-304, issued by the United States Environmental Protection Agency/ Environmental Response Team Center (U.S.EPA/ERTC), directed personnel of the Response Engineering and Analytical Contract (REAC) to provide assistance in characterizing the Waste Disposal Inc. (WDI) Site in Santa Fe Springs, California. The WDI Superfund site contains a buried 42-million gallon capacity reservoir originally constructed at grade for crude petroleum storage. The reservoir is approximately 600 feet in diameter and 17 feet deep. The upper portion of the reservoir was supported by above ground-level earthen berms, of which the interior walls and floor were lined with concrete. The reservoir was decommissioned for storage of crude petroleum in the late 1920s, but was used until 1959 for the disposal of a variety of liquids and solid wastes. Based on investigations at the site, the waste materials disposed of at WDI, many of which contain hazardous substances, include petroleum-related chemicals, solvents, acetylene sludge, drilling muds, and construction debris.

Historical aerial photographs indicate that liquids were also discharged into bermed areas surrounding the reservoir beginning in the late 1920s. These bermed areas were also at grade until the early 1950s, when the reservoir and the surrounding bermed disposal pits were covered with 5 to 10 feet of soil. Recent liquids extraction tests conducted in 1998, including investigative trenching, confirmed that free liquids are still present within the reservoir.

1.1.2 Area 7 Background

In addition to the areas directly adjacent to the reservoir, disposal of liquids and waste materials also occurred in other areas of the site, including Area 7 in the south-east corner of the site. Aerial photographs from the 1940s indicate a below ground surface disposal pit in Area 7, near the intersection of Greenleaf Avenue and Los Nietos Road (see Figure 1, Site Location Map). In August 1998, EPA's ERTC conducted a Geoprobe characterization of Area 7 to locate a possible perched liquids zone for application of the vacuum-enhanced extraction technology for removal of gases and liquids from the buried wastes. Liquids were observed when ERTC/REAC conducted a Gore-Sorber study in the fall of 1997. Based on this data and historical photographs, it was believed that sufficient liquids were captured in the buried waste to warrant testing of the enhanced-vacuum extraction technology. During August 1998, the Waste Disposal, Inc. Group (WDIG) performed a standard soil vapor extraction (SVE) test of the Area 7 waste mass to evaluate the effectiveness of SVE for removing subsurface gas. The intention of the ERTC was to compare the results of these two technologies for the purpose of extracting both liquids and gases.

1.2 Study Objectives

The objectives of the Area 7 study were:

- to characterize the buried wastes, including the characteristics and location of contaminated soils and liquids.
- to locate a perched liquids zone for application of the vacuum-enhanced extraction

technology for removal of gases and liquids from the buried wastes.

2.0 METHODS

A Geoprobe™, operated by TEG, Inc., under contract to REAC, was used to advance exploratory holes at 14 locations from 8-10 August 1998. However, because of buried debris, it was necessary to install offset holes at several locations in order to reach a maximum target depth of between 18 and 22 feet below ground surface (bgs). Some holes were terminated before the target depth if no odor and visible petroleum staining were noted on the core samples, or if buried concrete debris consistently prevented hole completion. Hole locations are indicated on Figure 2 (Location of Geologic Cross-Sections) and core descriptions are provided in Appendix A. In each boring, 1-inch diameter, 2-foot long continuous cores were taken to the total depth. Cores were collected in both acetate and stainless steel 6-inch long sleeves and described on site. The cores were later incorporated with other investigative-derived wastes and placed beneath the new interim cover installed over the reservoir by the WDIG in October 1998.

3.0 RESULTS

In general, the subsurface section (top to bottom) is mostly fill, approximately 16 to 20 feet deep, consisting of a silt to sandy silt matrix with concrete and other debris. The fill material appears to be underlain by a natural, undisturbed, fine, well-sorted sand or, in some places, possibly a silt. Thick, black, oily liquid was noted in cores from locations 7-2, 7-6, 7-10, and 7-11. Black, liquid impregnated or black-stained fill was observed in cores from locations 7-3 and 7-7. Slight to moderate staining occurred in cores from holes 7-1, 7-4, 7-8, 7-12, and 7-14. Cores from holes 7-5, 7-8, 7-9, and 7-13 showed no visible contamination. Perched groundwater was observed in Boring 7-4 from approximately 8 to 12 feet bgs and in Boring 7-6 from approximately 10 to 12 feet bgs.

Geologic cross-section locations for Area 7 are shown in Figure 2 and the cross-sections, developed from the Geoprobe data, are provided in Figures 3 through 11. The cross-sections are referenced to ground surface because no boring elevation data are available. However, there is little surface elevation change across the area of investigation. The term "clay" as used on the cross-sections refers in nearly all cases to what appears to be a drilling mud incorporated into the fill material. The extent of soil-staining and of apparent oily liquids are outlined on Figure 12. Based on existing information, it appears that the extent of soil staining extends somewhat outside the area of investigation and is on the order of 200,000 cubic feet (ft^3). The volume of soil containing liquids, as determined from the boring information is approximately 50,000 ft^3. Assuming a porosity of 5 percent (0.05), the apparent liquid volume is approximately 2,500 ft^3 (18,700 gallons). Perhaps 10 percent, or approximately 1,900 gallons, may be recoverable. These are order of magnitude estimates that can only be refined by actual field tests. Because of the presence of drilling mud within the fill, vacuum-enhanced extraction is deemed inappropriate for removal of the liquids.

4.0 REFERENCES

Ebasco Services Incorporated. 1989. Final groundwater characterization report, Waste Disposal Inc., Santa Fe Springs, CA. EPA Work Assignment Number 2089LC1. EPA Contract Number 68-01-7250.

Figures

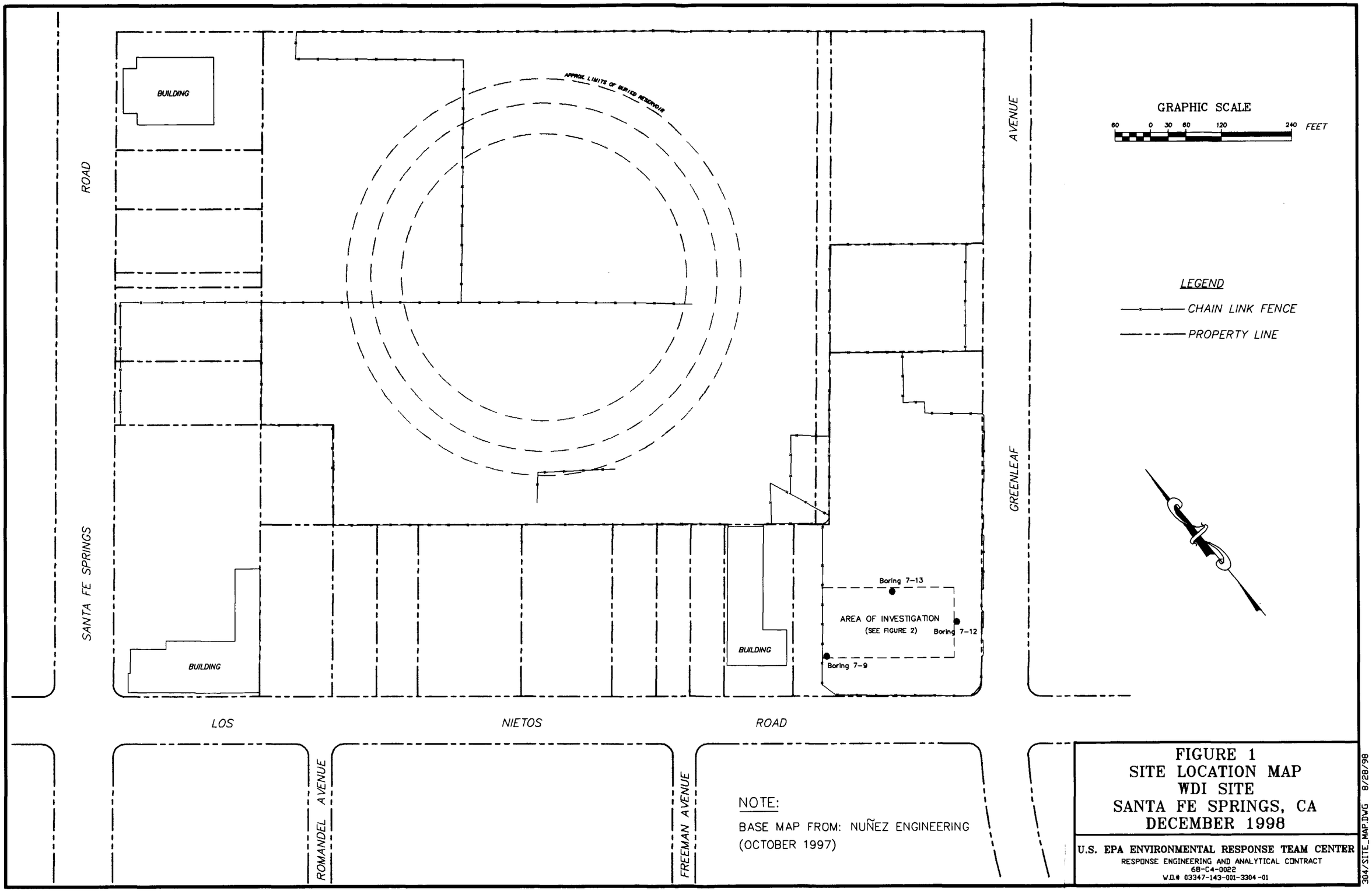
BUILDING
APPROX. LIMITS OF BURIED RESERVOIR
ROAD
SANTA FE SPRINGS
AVENUE
GREENLEAF
GRAPHIC SCALE
60 0 30 60 120 240 FEET
LEGEND
CHAIN LINK FENCE
PROPERTY LINE
Boring 7-13
AREA OF INVESTIGATION
(SEE FIGURE 2)
Boring 7-12
Boring 7-9
BUILDING
BUILDING
LOS
NIETOS
ROAD
ROMANDEL AVENUE
FREEMAN AVENUE
NOTE:
BASE MAP FROM: NUÑEZ ENGINEERING
(OCTOBER 1997)
FIGURE 1
SITE LOCATION MAP
WDI SITE
SANTA FE SPRINGS, CA
DECEMBER 1998
U.S. EPA ENVIRONMENTAL RESPONSE TEAM CENTER
RESPONSE ENGINEERING AND ANALYTICAL CONTRACT
68-C4-0022
W.O.# 03347-143-001-3304-01
304/SITE_MAP.DWG 8/28/98

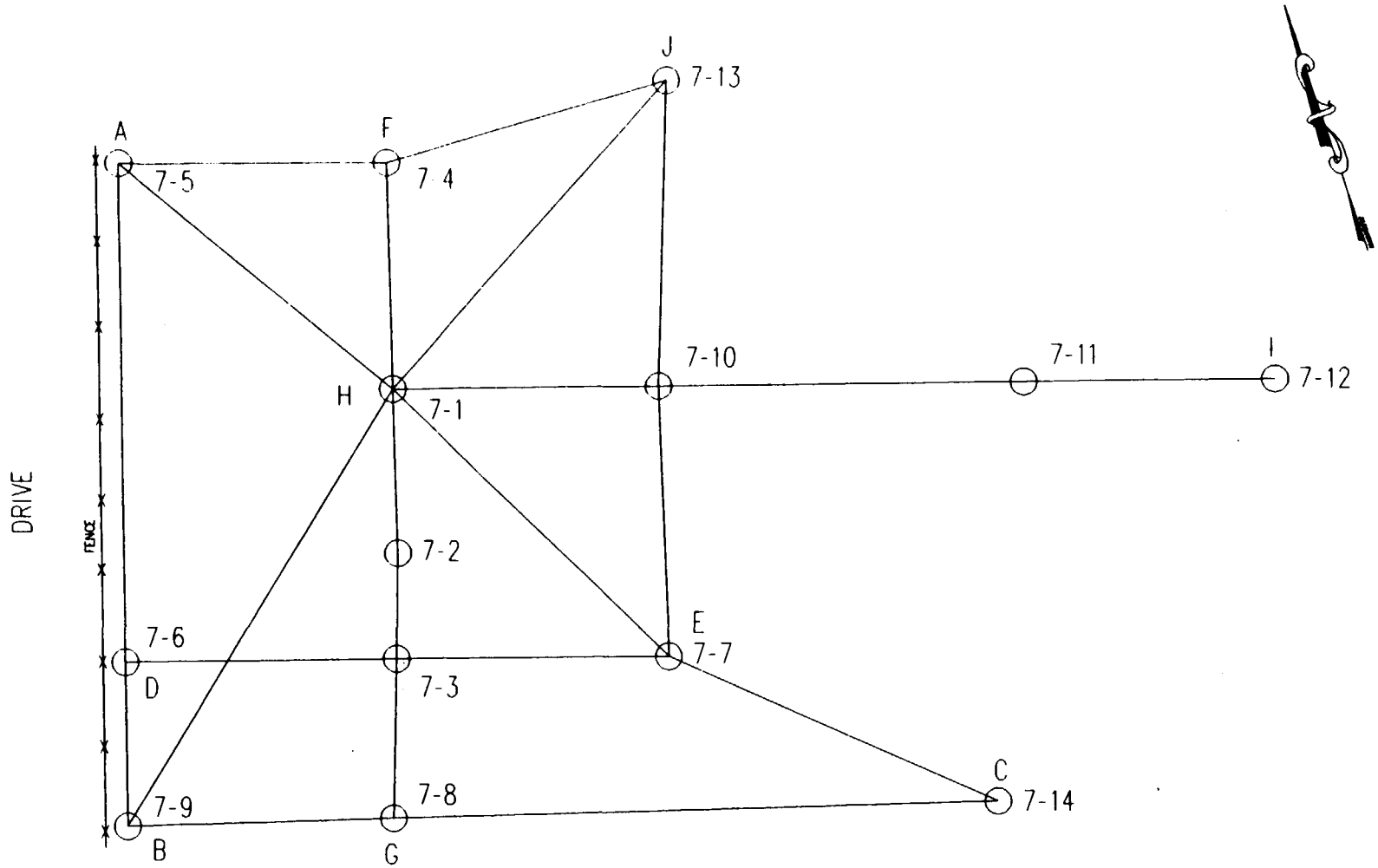

○ 7-3: BORING LOCATION

0 25 50 FEET
HOR. SCALE

U.S. EPA ENVIRONMENTAL RESPONSE TEAM CENTER
RESPONSE ENGINEERING AND ANALYTICAL CONTRACT
68-C4-0022
WO# 03347-143-001-3304-01

FIGURE 2
LOCATION OF GEOLOGIC CROSS-SECTIONS
WDI SITE - AREA 7
SANTA FE SPRINGS, CA
DECEMBER 1998

7/6/94
undefined

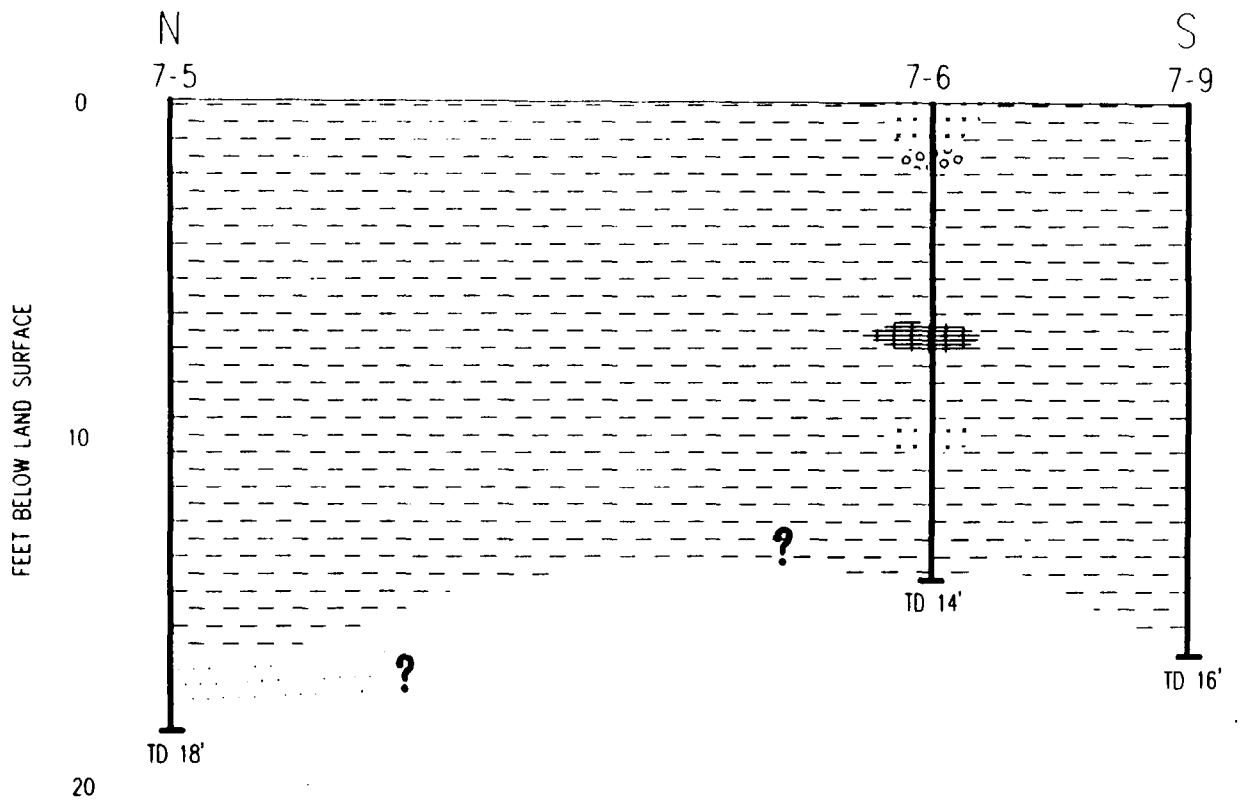

CLAY
OILY LIQUID
SAND
GRAVEL
WATER
ODOR OR STAINING
SILT
CONCRETE OR DEBRIS

0 25 50 FEET
HOR. SCALE

U.S. EPA ENVIRONMENTAL RESPONSE TEAM CENTER
RESPONSE ENGINEERING AND ANALYTICAL CONTRACT
68-C4-0022
W.O.# 03347-143-001-3304-01

FIGURE 3
CROSS-SECTION A-B
WDI SITE - AREA 7
SANTA FE SPRINGS, CA
DECEMBER 1998

7/6/94

undefined

GRAVEL
CONCRETE OR DEBRIS
U.S. EPA ENVIRONMENTAL RESPONSE TEAM CENTER
RESPONSE ENGINEERING AND ANALYTICAL CONTRACT
68-C4-0022
W.O.# 03347-143-001-3304-01
SANTA FE SPRINGS, CA
DECEMBER 1998
undefined

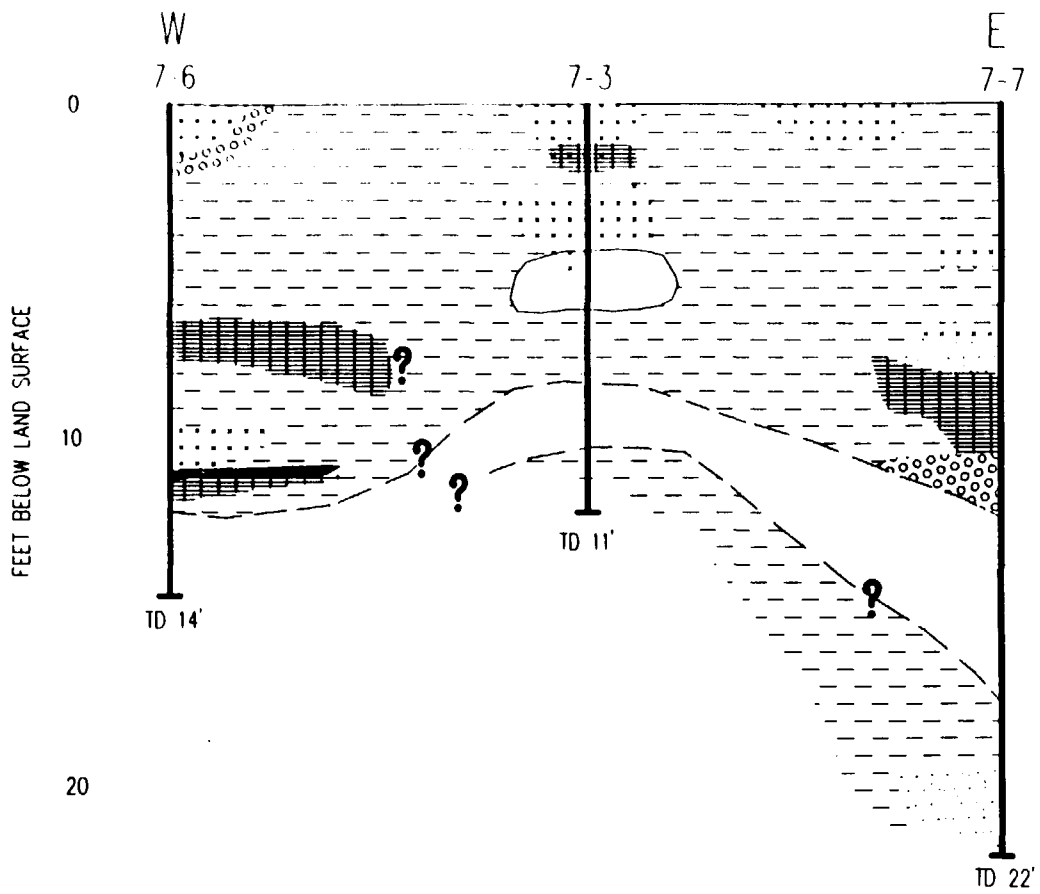

CLAY
OILY LIQUID
SAND
GRAVEL
WATER
ODOR OR STAINING
SILT
CONCRETE OR DEBRIS

0 25 50 FEET
HOR. SCALE

U.S. EPA ENVIRONMENTAL RESPONSE TEAM CENTER
RESPONSE ENGINEERING AND ANALYTICAL CONTRACT
68-C4-0022
WO# 03347-143-001-3304-01

FIGURE 5
CROSS-SECTION D-E
WDI SITE - AREA 7
SANTA FE SPRINGS, CA
DECEMBER 1998

7/6/94
undefined

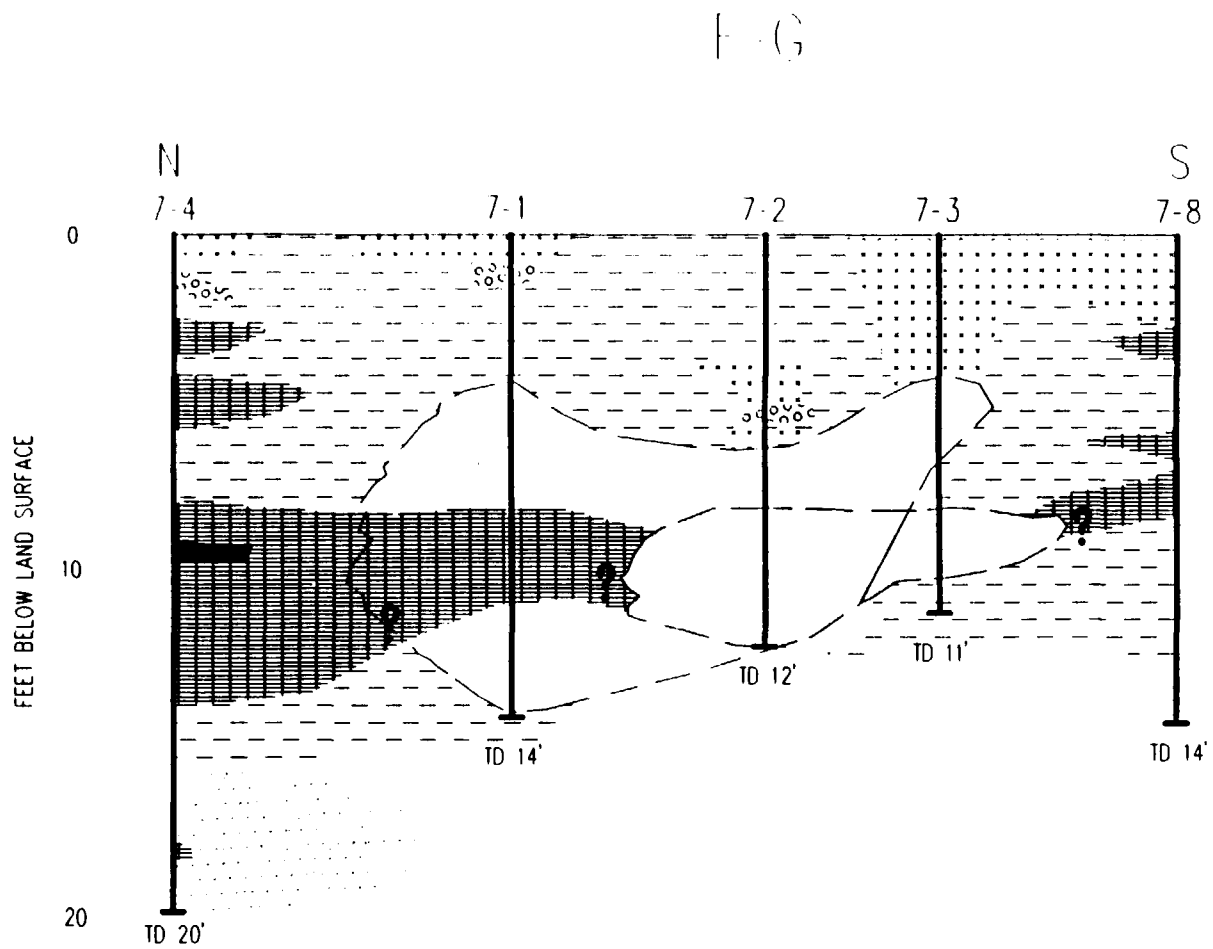

CLAY
OILY LIQUID
SAND
GRAVEL
WATER
ODOR OR STAINING
SILT
CONCRETE OR DEBRIS

0 25 50 FEET
HOR. SCALE

U.S. EPA ENVIRONMENTAL RESPONSE TEAM CENTER
RESPONSE ENGINEERING AND ANALYTICAL CONTRACT
68-C4-0022

FIGURE 6
CROSS-SECTION F-G
WDI SITE - AREA 7
SANTA FE SPRINGS, CA
DECEMBER 1998

7/6/94

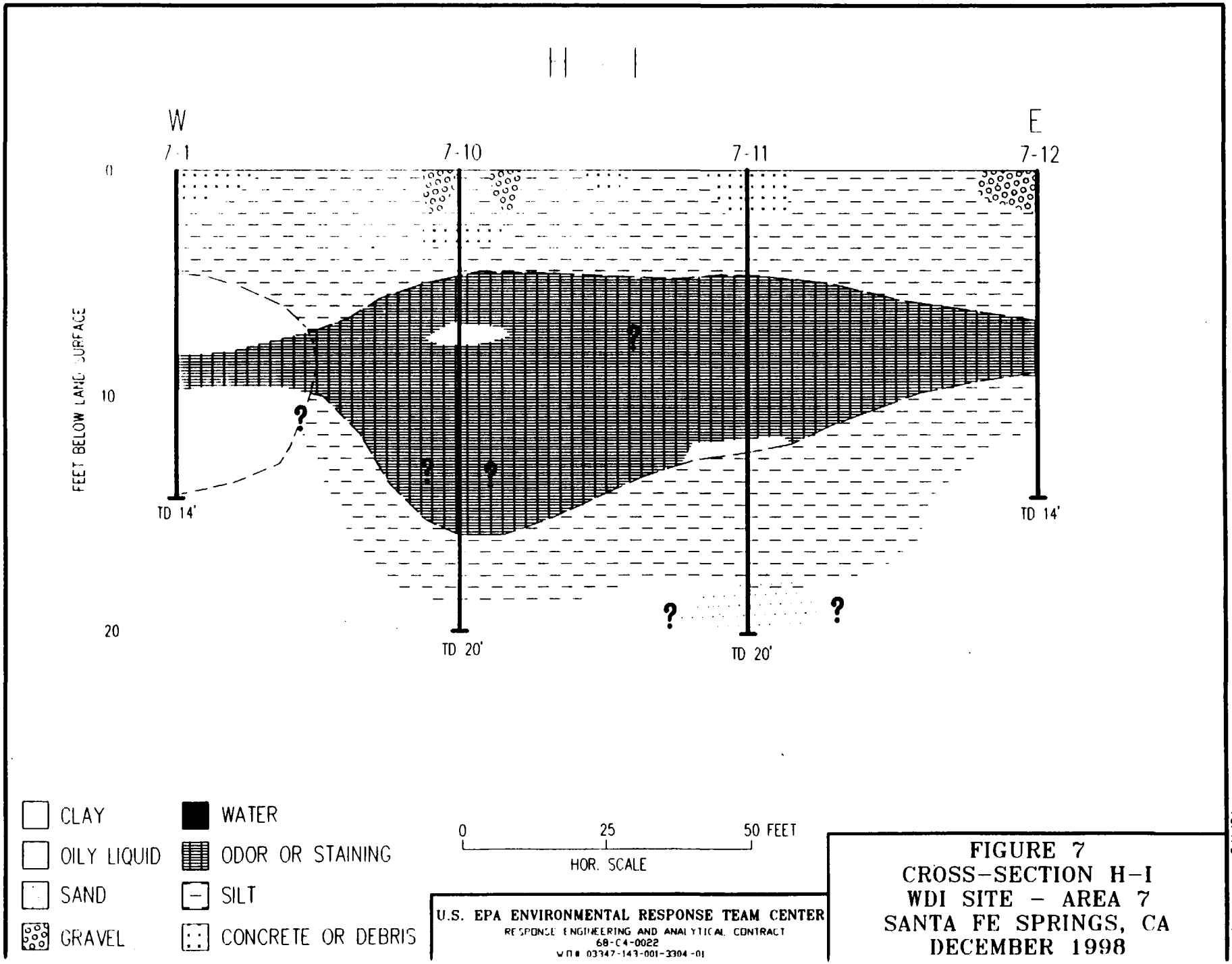
H - I
W
E
7-1
7-10
7-11
7-12
0
10
20
FEET BELOW LAND SURFACE
TD 14'
TD 14'
TD 20'
TD 20'
?
CLAY
OILY LIQUID
SAND
GRAVEL
WATER
ODOR OR STAINING
SILT
CONCRETE OR DEBRIS
0
25
50 FEET
HOR. SCALE
U.S. EPA ENVIRONMENTAL RESPONSE TEAM CENTER
RESPONSE ENGINEERING AND ANALYTICAL CONTRACT
68-C4-0022
WO# 03347-143-001-3304-01
FIGURE 7
CROSS-SECTION H-I
WDI SITE - AREA 7
SANTA FE SPRINGS, CA
DECEMBER 1998
7/6/94

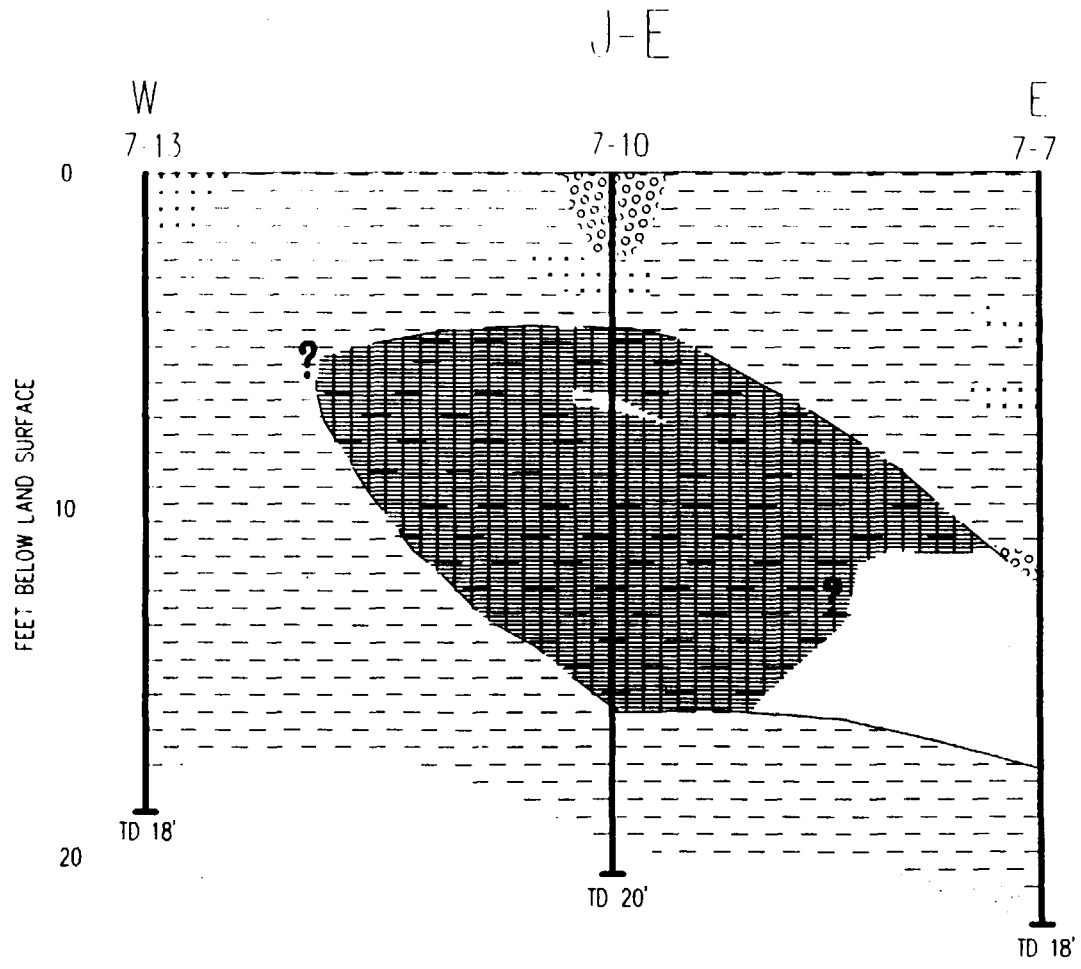

CLAY
OILY LIQUID
SAND
GRAVEL
WATER
ODOR OR STAINING
SILT
CONCRETE OR DEBRIS

0 25 50 FEET

U.S. EPA ENVIRONMENTAL RESPONSE TEAM CENTER
RESPONSE ENGINEERING AND ANALYTICAL CONTRACT
68-C4-0022
WO# 03347-143-001-3304-01

FIGURE 8
CROSS-SECTION J-E
WDI SITE - AREA 7
SANTA FE SPRINGS, CA
DECEMBER 1998

undefined 7/6/94

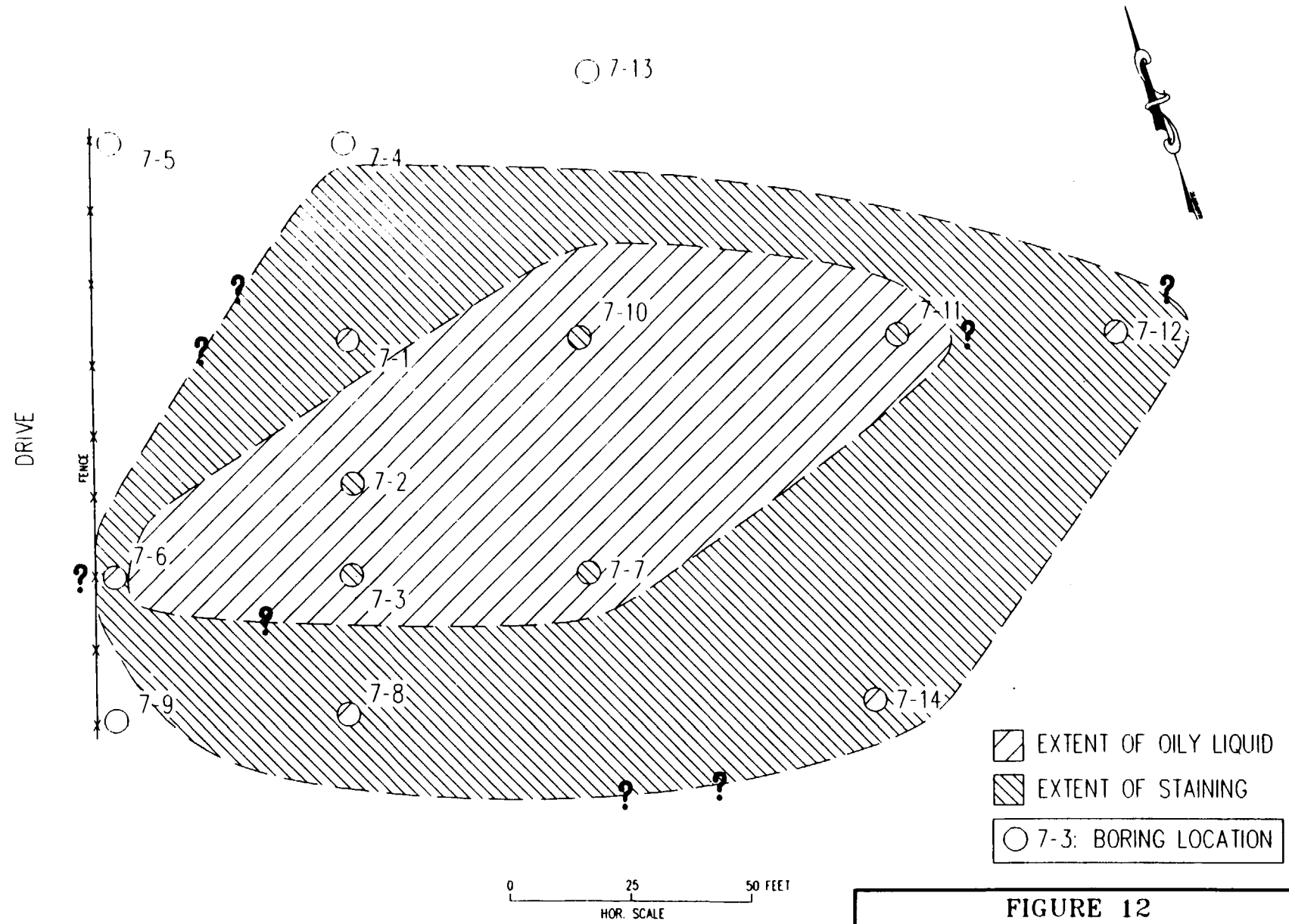

FIGURE 12
EXTENT OF PRODUCT AND STAINING
WDI SITE - AREA 7
SANTA FE SPRINGS, CA
DECEMBER 1998

U.S. EPA ENVIRONMENTAL RESPONSE TEAM CENTER
RESPONSE ENGINEERING AND ANALYTICAL CONTRACT
68-C4-0022
WO# 03347-143-001-3304-01

7/6/94
undefined

APPENDIX A

DESCRIPTIVE LOGS

AREA 7 GEOPROBE CHARACTERIZATION REPORT

WDI SITE

SANTA FE SPRINGS, CALIFORNIA

DECEMBER 1998

Boring 7-1
(Composite Log from Holes 7-1, 7-1a, 7-1b,)

Depth (feet)	Lithology
0-2	Silty sand to silt, dark brown, with angular to sub-angular gravel, and concrete debris, non-cohesive, dry. 40% recovery.
2-4	Silt, black-stained, petroleum-like odor, non-cohesive, micaceous, dry.
4-6	Clay, silty, black, cohesive, no odor, moist.
6-8	Clay, silty, black, moist, cohesive, rare gravel, some petroleum-like odor, wet at bottom of core. 100% recovery.
8-10	Same as 6-8 feet. Moist to slightly wet, petroleum-like odor. 100% recovery.
10-12	Same as 6-8 feet but slightly dryer.
12-14	Concrete piece in bottom of barrel. 40% recovery. Refusal at 14 feet.

Boring 7-2
(Composite Log from Holes 7-2, 7-2a)

Depth (feet)	Lithology
0-2	Silt, mottled, with some gravel, non-cohesive, dry.
2-4	Same as 0-2 feet but with concrete at 3 feet, no odor, dry. 40% recovery.
4-6	Silt, brown, and small gravel, very slightly cohesive, with concrete fragments, dry, no odor. 25% recovery.
6-8	Clay (probably drilling mud), black, cohesive, moist, slight petroleum-like odor. 25% recovery.
8-10	Only recovery is 1-2 inches of thick, black oily liquid in bottom of core barrel.
10-12	Silt to mud, black-impregnated, free oily liquid on top of solid core. 75% recovery. Refusal at 12 feet.

Boring 7-3

Depth (feet)	Lithology
0-2	Silt, brown with small gravel, non-cohesive, dry, slight petroleum-like odor. 60% recovery.
2-4	Broken concrete and rock fragments, dry.
4-6	Clay, gray to black, cohesive, soft, moist to wet. 50% recovery.
6-8	Concrete fragments and silt, dry, gray. 12% recovery.
8-10	Silty clay, impregnated with petroleum-related liquid, with broken concrete fragments in top 2-inches of core. 40% recovery.
10-12	No recovery. Refusal at 11 feet

Boring 7-4

Depth (feet)	Lithology
0-2	Concrete fragments and gravel in silt matrix, dry. 15 % recovery.
2-4	Top 1-inch: same as 0-2 feet. Remainder of core: clay, silty, black, petroleum-like odor, cohesive, micaceous, slightly moist. 55% recovery.
4-6	Clay, black, silty, cohesive, micaceous, moist, slight petroleum-like odor.
6-8	Same as 4-6 feet, moist to wet.
8-10	Same as 4-6 feet but stronger petroleum-like odor, very plastic, wet. 55% recovery.
10-12	Same as 8-10 feet.
12-14	Same as 8-10 feet, wet to moist.
14-16	Top 1-foot: silt, black, non-cohesive, micaceous, dry. Remainder of core: sand, very fine, to silt, well-sorted, dry. 60% recovery.
16-18	Sand, gray, very fine to fine, well-sorted, with interlayered black silt, dry, no odor.
18-20	Sand, gray, fine to coarse, sub-angular, with occasional gravel, top 6-inches is finer-grained and stained black, dry, no odor.

Boring 7-5

Depth (feet)	Lithology
0-2	Silt, brown, and gravel, dry.
2-4	Silt, brown to mottled, occasional gravel, non-cohesive, dry.
4-6	Same as 2-4 feet but no gravel.
6-8	Silt, brown, clayey, fairly dense, slightly cohesive, moist, no odor, appears clean.
8-10	Same as 6-8 feet but more cohesive, no odor, appears clean.
10-12	Silt, brown, clayey, fairly dense, cohesive, no odor, appears clean.
12-14	Same as 10-12 feet.
14-16	Silt to very fine sand, brown, well-sorted, non-cohesive, dry, no odor, appears clean.
16-18	Sand, gray to white, fine to coarse, poorly sorted, sub-angular, dry, clean, no odor, appears clean.

Boring 7-6
(Composite Log from Holes 7-6, 7-6a, 7-6b)

Depth (feet)	Lithology
0-2	Gravel and silt, brown, non-cohesive, dry.
2-4	Silt, brown, non-cohesive, micaceous, dry.
4-6	Same as 2-4 feet.
6-8	Same as 2-4 feet, black-stained silt in tip of core barrel, slight petroleum-like odor. 15% recovery.
8-10	Silt, brown, with concrete fragments in bottom 1-inch of core, dry, 10% recovery.
10-12	Silt and clay (drilling mud ?), impregnated with oily liquid, thick and tar-like. 50% recovery.
12-14	Silt to clay, impregnated with oily liquid, thick and tar-like. Bottom 1-inch of core: silt, gray to black. Water on top of core. Refusal at 14 feet.

Boring 7-7
(Composite Log from Holes 7-7, 7-7a)

Depth (feet)	Lithology
0-2	Silt, gray-brown, non-cohesive, micaceous, dry. 50% recovery.
2-4	Same as 0-2 feet. 50% recovery.
4-6	Silt, brown to mottled, non-cohesive, micaceous, dry. Gravel plug in tip of core barrel. 10% recovery.
6-8	Silt to coarse sand, bottom 2-3 inches is stained black, dry. 35%recovery.
8-10	Clayey silt to silty clay, black, cohesive, petroleum-like odor, moist. 50% recovery.
10-12	Same as 8-10 feet.
12-14	Same as 8-10 feet but with wood fragments. 50% recovery.
14-16	Silt, clayey with gravel, black, impregnated with oily liquid. Concrete fragments in top1-inch of core. 50% recovery.
16-18	Probable fill material impregnated with oily liquid grading downward to silt, brown, dry at bottom of core. 75% recovery.
18-20	Silt, brown to gray, very slightly cohesive, grading downward to very fine sand to silt, mottled, dry, no odor. 100% recovery.
20-22	Silt, gray-brown, to very fine sand, micaceous, dry, clean, no odor.

Boring 7-8

Depth (feet)	Lithology
0-2	Concrete fragments with 1-inch of brown silt at bottom of core. 25% recovery.
2-4	Silt, brown, non-cohesive, dry, slightly stained, petroleum-like odor. 65% recovery.
4-6	Silt, brown, non-cohesive, dry, no odor. 100% recovery.
6-8	Same as 4-6 feet, except mottled.
8-10	Silt, greenish-gray, micaceous, non-cohesive, very slight petroleum-like odor, dry. 75% recovery.
10-12	Same as 8-10 feet, 90% recovery.
12-14	Silty clay to clayey silt (probably fill), dark greenish-gray, non-cohesive, dry, no odor. Refusal at 14 feet.

Boring 7-9

Depth (feet)	Lithology
0-2	Silt, brown to gray, non-cohesive, dry. 25% recovery.
2-4	No recovery
4-6	No recovery
6-8	Silt, brown, slightly mottled, non-cohesive, dry, no odor.
8-10	Same as 6-8 feet.
10-12	Same as 6-8 feet. 95% recovery.
12-14	Same as 6-8 feet. 95% recovery. No odor.
14-16	Same as 6-8 feet. No odor or staining. 100% recovery. Refusal at 16 feet.

Boring 7-10

Depth (feet)	Lithology
0-2	Silt, brown to mottled, some gravel, non-cohesive, dry. 50% recovery.
2-4	Silt, with gravel, stained black, petroleum-like odor.
4-6	Same as 2-4 feet. Highly stained in bottom 1-inch of core. 20% recovery.
6-8	No recovery, easy driving.
8-10	No recovery, but some black heavy oily liquid on outside of core barrel, wet core barrel, easy driving.
10-12	No recovery, wet core barrel with petroleum-like odor.
12-14	Easy driving, no recovery, wet core barrel.
14-16	Easy driving, no recovery, wet core barrel.
16-18	Silty clay to clayey silt, black, impregnated with oily liquid, grading downward to hard, brown to tan silt with some black staining, slight petroleum-like odor for entire core. 100% recovery.
18-20	Silt, stained gray to black, grading downward to mottled tan and gray-green, micaceous, dry, dense, no odor.

Boring 7-11

Depth (feet)	Lithology
0-2	Concrete fragments and silt. 25% recovery.
2-4	Concrete fragments, grading downward to silt, tan to black (stained?), non-cohesive, dry, no odor. 55% recovery.
4-6	Silt, with some gravel, black-stained, easy driving. 25% recovery.
6-8	Clayey silt to silty clay, gray to black, cohesive, moist, no odor.
8-10	Same as 6-8 feet, heavily stained (black) at bottom of core with some cleaner, brown silt inter-laying. 75% recovery.
10-12	Clayey silt to silty clay, cohesive, heavily stained, a little oily liquid. 100% recovery.
12-14	Clayey silt to silty clay, cohesive, black-stained, moist. 90% recovery.
14-16	Same as 12-14 feet. 90% recovery.
16-18	Same as 12-14 feet, except fine gray sand in bottom of core, dry. 100% recovery.
18-20	Silt to fine sand, gray-white, dry, no odor, no staining.

Boring 7-12
(Composite Log from Holes 7-12, 7-12a, 7-12b)

Depth (feet)	Lithology
0-2	Sand, brown, with gravel, poorly sorted, fine to coarse, dry. 25% recovery.
2-4	Silt, brown with gravel, dry. 35% recovery.
4-6	Same as 2-4 feet. 1% recovery.
6-8	Clayey silt to silty clay, dark gray to black, stained (?), cohesive, no odor. 50% recovery.
8-10	Clay, silty, brown to black, oil-stained, cohesive, moist, some petroleum-like odor. 25% recovery.
10-12	Top 18-inches: Same as 8-10 feet. Bottom 6-inches: Silt, greenish-gray, dense, micaceous, friable, dry, no staining or odor.
12-14	Silt, greenish-gray, very slightly cohesive, dense, dry, no odor or staining.

Boring 7-13

Depth (feet)	Lithology
0-2	Concrete fragments and silt, brown, non-cohesive, dry.
2-4	Silt, brown, non-cohesive, micaceous, dry.
4-6	Same as 2-4 feet. 40% recovery.
6-8	Same as 2-4 feet. 40% recovery.
8-10	Same as 2-4 feet, except some mottling. 40% recovery.
10-12	Silt, gray-brown, slightly mottled, non-cohesive, dry, no odor.
12-14	Same as 10-12 feet but slightly clayey, no odor.
14-16	Same as 10-12 feet.
16-18	Silt, gray-brown, very slightly cohesive, damp, grading downward to silt and very fine sand, gray, micaceous, no odor.

Boring 7-14

Depth (feet)	Lithology
0-2	Silt, brown to mottled, non-cohesive, some gravel, dry.
2-4	Same as 0-2 feet with some black staining, no odor.
4-6	Silt, brown, non-cohesive, no staining, micaceous, dry. 35% recovery.
6-8	Same as 4-6 feet. 75% recovery.
8-10	Same as 4-6 feet. 75% recovery.
10-12	Silt, greenish-brown, dense, non-cohesive, micaceous, dry, very hard driving. 50% recovery.
12-14	Same as 10-12 feet, no odor or visible staining. Refusal in dense silt at 14 feet.