SFUND RECORDS CTR
2278923

Final Operation, Maintenance, and Monitoring Manual

Groundwater Treatment System
Omega Chemical Superfund Site

Volume 2 of 2
Appendix C – Vendor Manuals

November 19, 2009

Prepared for:

Omega Chemical Site
PRP Organized Group
(OPOG)

Prepared by:

CDM
111 Academy, Suite 150
Irvine, California 92617

Final Operation, Maintenance, and Monitoring Manual

Groundwater Treatment System
Omega Chemical Superfund Site

Volume 2 of 2
Appendix C – Vendor Manuals

November 19, 2009

Prepared for:

Omega Chemical Site
PRP Organized Group
(OPOG)

Prepared by:

CDM
111 Academy, Suite 150
Irvine, California 92617

Appendix C
Vendor Manuals

- Appendix C.1 Duplex Filters
- Appendix C.2 Anti-Scalant System
- Appendix C.3 Extraction Well Pumps
- Appendix C.4 Air Stripper System
- Appendix C.5 Vapor Phase Granular Activated Carbon
- Appendix C.6 Effluent Sump Pump
- Appendix C.7 Motor Control Center
- Appendix C.8 Programmable Logic Controller - Programming Codes
- Appendix C.9 Programmable Logic Controller Hardware
- Appendix C.10 Human Machine Interface
- Appendix C.11 Miscellaneous Instruments
- Appendix C.12 Miscellaneous Equipment

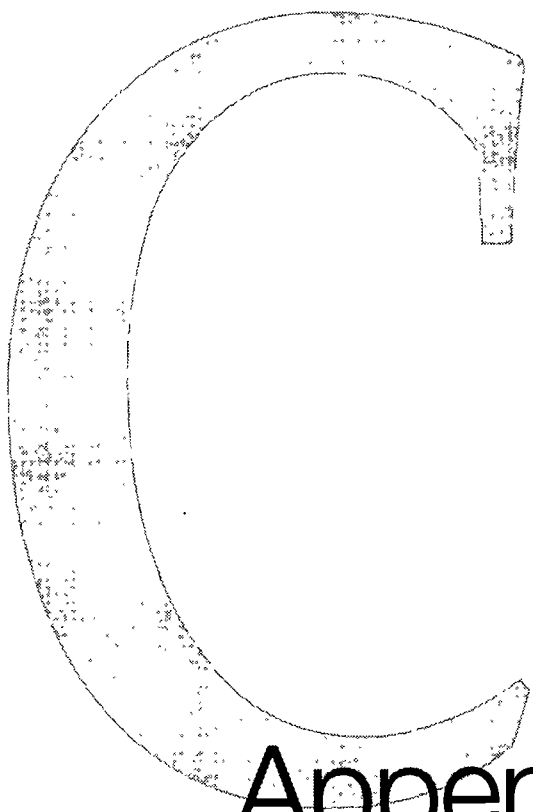

Appendix C

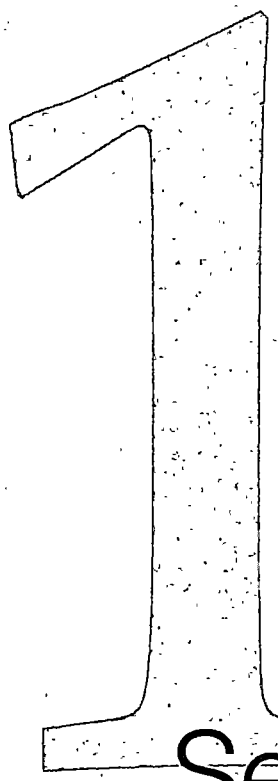

Section One

INSTALLATION, OPERATION AND MAINTENANCE MANUAL

ROSEDALE PRODUCTS, INC.

MODEL 6

150 & 300 PSIG RATED FILTER UNIT

Table of Contents

I. Installation 2

II. Operation 3

III. Spare Parts List 4

IV. Spare Parts Diagram 5

Rosedale Engineering Standards are the property of Rosedale Products, Inc A Rosedale standard or copy thereof shall not be distributed (except with express approval of Rosedale Products, Inc) to any individual or firm beyond the intended recipient firm or individual. Firms of individuals acting contrary to the above may be subject to suit, ineligibility for continued or future employment, or removal from Rosedale's "Approved Manufacturers and Specialty Contractors List"

I. Installation

Please remove all shipping and crating materials carefully. Be sure to remove the plugs from the inlet and outlet openings. Dispose of all crating materials safely.

The Model 6 Filter unit is capable of having several different piping variations based upon the outlet style of your unit. The inlet service line should be connected to the inlet flange or NPT coupling located near the top of the unit (above the basket level).

The outlet service line should be connected to the outlet flange or coupling, located near the middle or bottom of the unit depending upon the style of your unit (below basket level).

There are two 1/4" NPT ports on the shell and one 1/4" NPT port on the cover of the Model 6 Filter unit. These ports can remain plugged or used for pressure gauges or special fittings as your application requires.

Some installations require electrical grounding of all equipment, be sure to provide adequate grounding where necessary.

After completing installation be sure to double check connections for integrity. Your Model 6 Filter unit has been factory pressure tested leak free, therefore, any seepage problems usually occur from improper installation connections.

You are now ready to install the filter basket and bag. Remove cover by loosening the cover eyenuts. The eyenuts in the slotted corners should be loosened sufficiently to swing free. Loosen the third eyenut sufficiently to allow the top cover and closure assembly to swing away from the top of the unit.

Place the basket into the filter housing, make sure the basket flange is firmly seated on top of the basket collar.

Insert bag into the bag basket making sure filter bag ring is firmly seated on top of the basket flange. For best results, be sure filter bag is installed fully extended to the bottom of the basket.

Before replacing cover assembly, inspect cover seal gasket (replacing as necessary). Close cover and alternately tighten the three clamp assemblies evenly to ensure a leak proof seal between the cover and housing body. Torque closure assemblies to a maximum of 60-90$^{ft\text{-}lbs}$. Each installation may have different closure bolting torque requirements to effectively seal the filter vessel cover. Many installations require significantly lower closure bolting torque due to the variables explained below. The suggested torque values are for reference only. They are to be used as a guideline by maintenance personnel. These values are meant as a guideline for safe operation of the filter system at its maximum rated pressure. Many variables affect the torque required to operate the filter vessel without leaks. These variables include the diameter of the bolt, type and number of threads, material type and grade, condition of the nut bearing surface and lubrication of bolt threads and nut bearing surfaces. Other factors such as the condition of the o-ring, o-ring material, viscosity of the fluid being filtered, operating pressures, temperature, and the closure assembly tightening procedure must also be considered.

Your Rosedale Model 6 is now ready for operation!

Rosedale Engineering Standards are the property of Rosedale Products, Inc A Rosedale standard or copy thereof shall not be distributed (except with express approval of Rosedale Products, Inc.) to any individual or firm beyond the intended recipient firm or individual. Firms of individuals acting contrary to the above may be subject to suit, ineligibility for continued or future employment, or removal from Rosedale's "Approved Manufacturers and Specialty Contractors List".

II. Operation

Filter System Start-Up Procedure:

Prior to turning on the flow to the inlet service, please make the following checks:

1. Check inside filter unit to be sure basket and filter bag (if applicable) are in housing and do not require cleaning or replacement. If necessary install a clean filter basket and bag (if applicable).

2. Check that filter unit cover is securely fastened to housing. You are now ready to open the flow to the inlet service line. Slowly open the inlet service line approximately 25% of normal operational flow (open slowly as not to displace filter bag inside the housing). After filter unit is pressurized and vented, slowly open outlet service line unit valve until completely open. Complete opening of inlet service line until desired flow rate is reached.

Once the desired service flow has been established, the filter will operate efficiently until dirty. However, under no circumstances should more than *15 PSI Differential Pressure* through the filter be obtained. Operating the filter unit with a high differential may cause filter bags to rupture and/or cause damage to filter system and downstream equipment.

To prevent excessive drop through the filter unit, regular inspection of the filter media is required. Monitoring of differential pressure through the housing can be utilized as a means of determining whether or not the filter media needs cleaning or replacement.

When it becomes necessary to clean or replace filter media, follow the procedure outlined below:

1. First close the flow from the inlet service line.
2. Close the flow to the outlet service line. (In some applications closing flow to outlet is not required.)
3. Relieve the pressure from the filter unit.

⚠ WARNING

CONTENTS UNDER PRESSURE
Relieve Pressure in accordance with Manufacturer's instructions before opening Filter Vessel.
FAILURE TO DO SO MAY RESULT IN SERIOUS BODILY INJURY.

4. Drain housing sufficiently to access filter basket.
5. Remove cover by loosening the cover eyenuts. The eyenuts in the slotted corners should be loosened sufficiently to swing free. Loosen the third eyenut sufficiently to allow the top cover and closure assembly to swing away from the top of the unit.
6. Remove filter basket and clean thoroughly, remove the filter bag (if applicable) and throw away. (Cleaning and reusing the filter bag is not recommended.)

Rosedale Engineering Standards are the property of Rosedale Products, Inc. A Rosedale standard or copy thereof shall not be distributed (except with express approval of Rosedale Products, Inc.) to any individual or firm beyond the intended recipient firm or individual. Firms of individuals acting contrary to the above may be subject to suit, ineligibility for continued or future employment, or removal from Rosedale's "Approved Manufacturers and Specialty Contractors List".

7. Remove debris and sludge from inside the inlet portion of housing to avoid interference with cover seal or flow of fluid being filtered.
8. Remove basket seal (if applicable) and inspect, replace if necessary.
9. Install clean filter basket and filter bag (if applicable). Place the basket into the filter housing, make sure the basket flange is firmly seated on the basket collar. If applicable, insert bag on top of the bag basket flange making sure filter bag ring is firmly seated inside the basket flange. For best results, be sure filter bag is installed fully extended to the bottom of the basket.
10. Inspect cover gasket for cuts or other signs of failure and make sure it is properly seated.
11. Move cover back into position, and alternately tighten the three clamp assemblies evenly to ensure a leak proof seal between cover and housing body. Torque closure assemblies to a minimum of 60-90$^{ft\text{-}lbs}$. Higher torque may be required depending on your application and filter condition.

Your Rosedale Model 6 Filter unit is now ready for operation. Refer to filter system start-up procedure.

III. Spare Parts List

Your Rosedale Model 6 Filter unit will give you many years of reliable service provided periodic inspections are made of various components and replacement of worn parts are made promptly. The following is meant to be a recommended spare parts list, these parts are illustrated on the following page.

SPARE PARTS LIST			
Balloon	Description	Part Number	Time-Frame
1	Cover Seal	6150CG-*	as needed
2	Basket Seal	6BG-*	as needed
3	Cover	6*150	as needed
4	Eye Nut	8ENNI	as needed
5	Rod End	8RENI	as needed
6	Clevis Pin Assembly	8CPNI	as needed
7	Filter Bag	(See Order)	as needed
8	Filter Basket	(See Order)	as needed
9	Tripod Legs	6T18*S	as needed

* Select Material Designation:
C=Carbon Steel
S=304 Stainless Steel
S316=316 Stainless Steel
B=Buna N
E=Ethylene Propylene
V=Viton
TEV=Teflon Encapsulated Viton
TSW=Teflon Solid White

Rosedale Engineering Standards are the property of Rosedale Products, Inc. A Rosedale standard or copy thereof shall not be distributed (except with express approval of Rosedale Products, Inc.) to any individual or firm beyond the intended recipient firm or individual. Firms of individuals acting contrary to the above may be subject to suit, ineligibility for continued or future employment, or removal from Rosedale's "Approved Manufacturers and Specialty Contractors List"

IV. Spare Parts Diagram

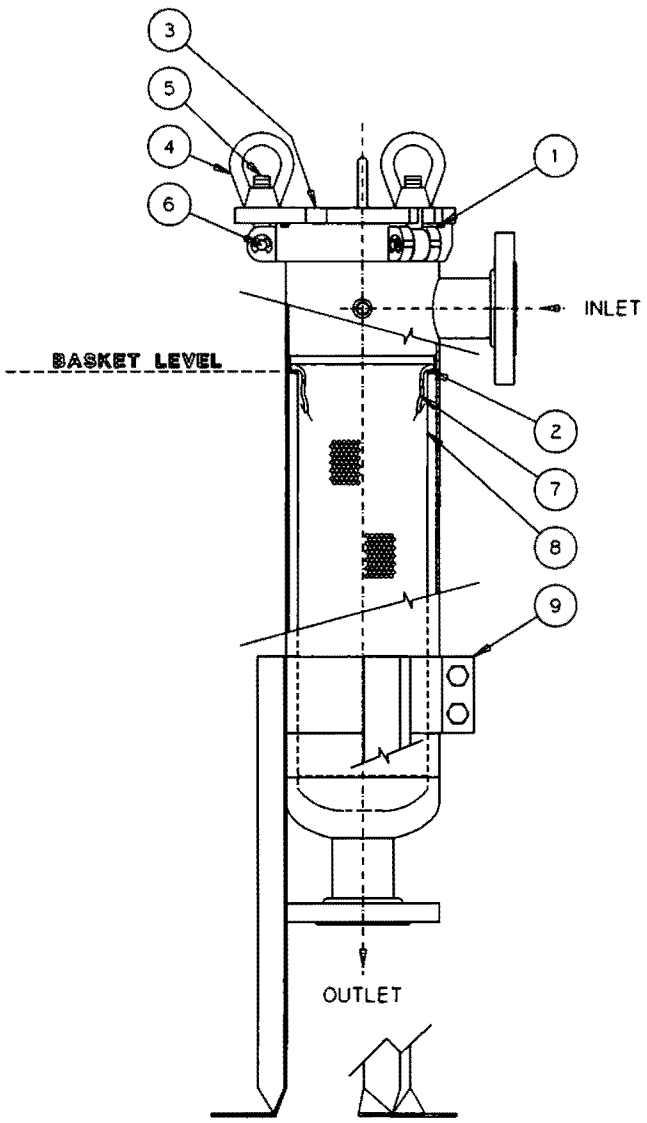

Rosedale Engineering Standards are the property of Rosedale Products, Inc A Rosedale standard or copy thereof shall not be distributed (except with express approval of Rosedale Products, Inc) to any individual or firm beyond the intended recipient firm or individual. Firms of individuals acting contrary to the above may be subject to suit, ineligibility for continued or future employment, or removal from Rosedale's "Approved Manufacturers and Specialty Contractors List"

Important Notice

Warranty: In the event any Rosedale Products, Inc. filtration product is found to be defective in material, workmanship, or not in conformance with any express warranty for a specific purpose, Rosedale's only obligation and your exclusive remedy, shall be to repair, replace or refund the purchase price of such parts or products upon timely notification thereof and substantiation that the product has been stored, maintained and used in accordance with Rosedale's written instructions.

EXCLUSIONS TO WARRANTY: THIS WARRANTY IS EXCLUSIVE AND IS IN LIEU OF ANY IMPLIED WARRANTY OF MERCHANTABILITY, FITNESS FOR A PARTICULAR PURPOSE OR OTHER WARRANTY OF QUALITY, EXCEPT OF TITLE AND AGAINST PATENT INFRINGEMENT.

LIMITATION OF LIABILITY: Except as provided above, Rosedale shall not be liable or responsible for any loss or damage, whether direct, indirect, incidental, special or consequential, arising out of sale, use or misuse of Rosedale filtration products, or the user's inability to use such products.

THE REMEDIES SET FORTH HEREIN ARE EXCLUSIVE.

Rosedale Products, Inc.
3730 West Liberty Road
Ann Arbor, MI 48103 USA
734-665-8201
800-821-5373
Fax. 734-665-2214
filters@rosedaleproducts.com
http://www.rosedaleproducts.com

Rosedale Engineenng Standards are the property of Rosedale Products, Inc A Rosedale standard or copy thereof shall not be distributed (except with express approval of Rosedale Products, Inc.) to any individual or firm beyond the intended recipient firm or individual. Firms of individuals acting contrary to the above may be subject to suit, ineligibility for continued or future employment, or removal from Rosedale's "Approved Manufacturers and Specialty Contractors List"

Model 6 Basket Strainer and Bag Filters

Strainers or Bag Filters: Your Choice!

Model 6 strainer/filter housings are made in 3 sizes and 3 pressure ratings, and can serve as basket strainers (for particle retention down to 74 micron size) or as bag filters (for particle retention down to 1 micron size). In all cases, covers are easily removed without special tools, and the basket or bag is easily cleaned or replaced.

Covers are secured by three eyenut assemblies. One of them acts as a hinge, when the cover is opened.

Features

- Low pressure drops
- Permanently piped housings
- Covers are O-ring sealed
- Carbon steel, or stainless steel (304 or 316) construction for housings
- All housings are electropolished to resist adhesion of dirt and scale
- Easy to clean!
- Adjustable-height legs, standard
- O-ring seals: Buna N, EPR, Viton®, Teflon®
- ASME code stamp available
- Three pressure ratings: 150, 210 or 300 psi
- Duplex units are available
- Can provide 3.4 square feet of basket or bag surface area without need for ASME code construction
- Three basket depths: 12, 18, or 30 inches (nominal)
- Special alloys

Options

- Sanitary construction
- Different outlet connections
- Higher pressure ratings
- Extra-length legs
- Heat jacketing
- Liquid displacers for easier servicing

Choosing a Basket Strainer or Bag Filter

Choose between straining (removing particles down to 74 micron size) or filtering a fluid (removing particles down to 1 micron). This will direct you to the correct basket when ordering.

Operation

Unfiltered liquid enters the housing above the bag or basket and passes down through them. Solids are contained inside the bag or basket, where they are easily and completely removed when the unit is serviced.

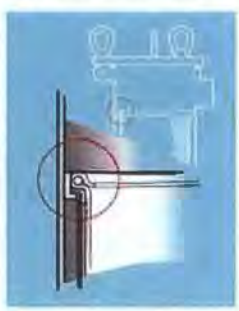

Fluid bypass around the basket is prevented because the outside diameter of the bag filter seals against the housing inside diameter.

A single cover gasket is used to seal the opening, and covers can be installed and removed without tools.

Pressure Drop Data

Basket strainers and bag filters are usually selected so that the pressure drop does not exceed 2 psi, when they are clean. Higher pressure drops may be tolerated, when contaminant loading is low. Bag change should occur at 15psid.

The pressure drop data is accurate for all housings with strainer or bag filter baskets. When bag filters are added, total pressure drop becomes the sum of the pressure drop as determined by the steps below, plus the pressure drop through the bag as defined in Rosedale Filter Bag section.

Follow these easy steps:

1. Using the desired pipe size and approximate flow rate, determine the basic pressure drop from the appropriate graph.
2. Multiply the pressure drop obtained in step 1 by the viscosity correction factor found in the accompanying table. This is the adjusted (clean) pressure drop for all baskets, without bag filters.
3. Add the pressure drop for the bag filter.

Note: Filter bags are specified separately. See page 120-130.

	Viscosity, cps								
	1 (H_2O)	50	100	200	400	600	800	1000	2000
All unlined baskets	.65	.85	1.00	1.10	1.20	1.40	1.50	1.60	1.80
40-mesh lined	.73	.95	1.20	1.40	1.50	1.80	1.90	2.00	2.30
60-mesh lined	.77	1.00	1.30	1.60	1.70	2.10	2.20	2.30	2.80
80-mesh lined	.93	1.20	1.50	1.90	2.10	2.40	2.60	2.80	3.50
100-mesh lined	1.00	1.30	1.60	2.20	2.40	2.70	3.00	3.30	4.40
200-mesh lined	1.30	1.70	2.10	3.00	3.40	3.80	4.40	5.00	6.80

Basket Data

Depth Nominal (inches)	Diameter (inches)	Surface Area (sq. ft.)	Volume (cu. in.)	Bag Size No.
12	5	1.3	235	7
18	5	2.0	350	8
30	5	3.4	630	9

Model 6–For flow rates to 100 gpm*

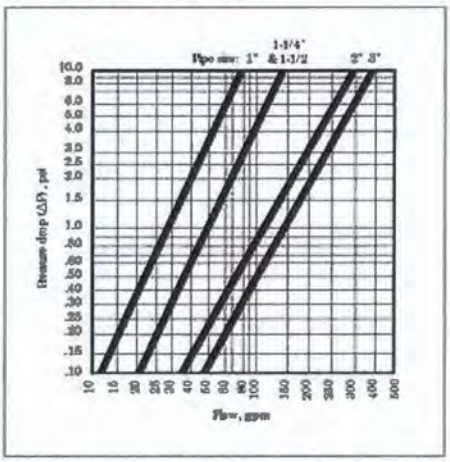

*Based on housing only. Fluid viscosity, bag filter used, and expected dirt loading should be considered when sizing a filter.

Eyenut covers with bag filter and basket or basket strainer.

Dimensions (IN)

Cover Types

EYENUT COVER

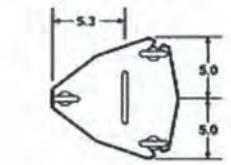

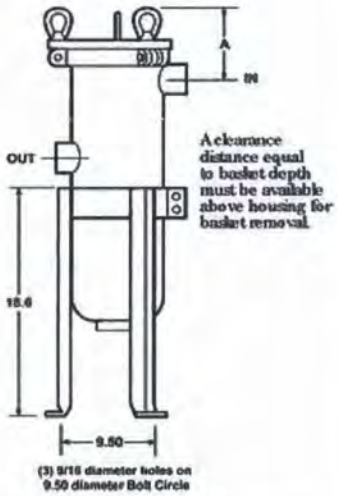

Outlet Styles

Flanged (150 lb. ANSI) Threaded (NPT)

STYLE 1

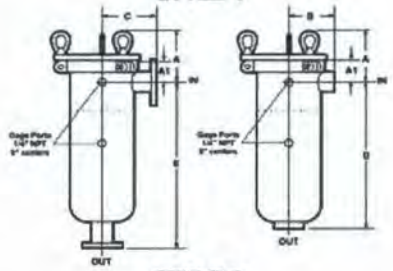

STYLE 2

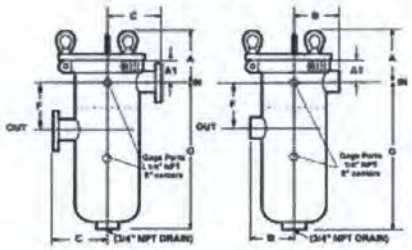

STYLE 3

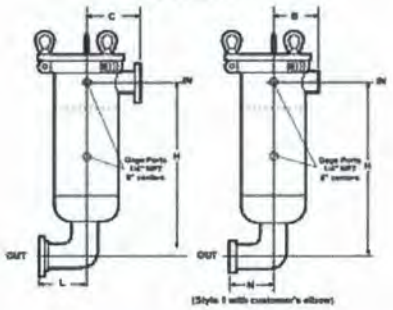

Dimensions (IN)

Model	Pipe Size	A	A1	B	C	D	E	F	G	H	L	N
6-12	1	6.3	2.5	4.3	6.0	17.6	19.0	4.3	17.4	18.1	5.0	2.5
	1-1/4	6.3	2.5	4.3	6.0	17.6	19.0	4.7	17.4	18.4	5.0	2.9
	1-1/2	6.3	2.5	4.3	6.0	17.6	19.0	4.7	17.4	18.8	5.0	3.3
	2	7.1	3.4	4.3	6.0	16.6	19.0	6.6	16.5	18.6	5.0	4.0
	3	7.1	3.4	4.3	6.0	17.0	19.0	6.6	16.5	19.9	7.3	6.1
6-18	1	6.3	2.5	4.3	6.0	22.8	24.3	4.3	22.7	23.3	5.0	2.5
	1-1/4	6.3	2.5	4.3	6.0	22.8	24.3	4.7	22.7	23.7	5.0	2.9
	1-1/2	6.3	2.5	4.3	6.0	22.8	24.3	4.7	22.7	24.0	5.0	3.3
	2	7.1	3.4	4.3	6.0	21.8	24.3	6.6	21.8	23.8	5.0	4.0
	3	7.1	3.4	4.3	6.0	22.3	24.3	6.6	21.8	25.3	7.3	6.1
6-30	1	6.3	2.5	4.3	6.0	32.8	34.3	4.3	32.7	33.3	5.0	2.5
	1-1/4	6.3	2.5	4.3	6.0	32.8	34.3	4.7	32.7	33.7	5.0	2.9
	1-1/2	6.3	2.5	4.3	6.0	32.8	34.3	4.7	32.7	34.0	5.0	3.3
	2	7.1	3.4	4.3	6.0	31.8	34.3	6.6	31.8	33.8	5.0	4.0
	3	7.1	3.4	4.3	6.0	32.3	34.3	6.6	31.8	35.3	7.3	6.1

How To Order

Build an ordering code as shown in the example

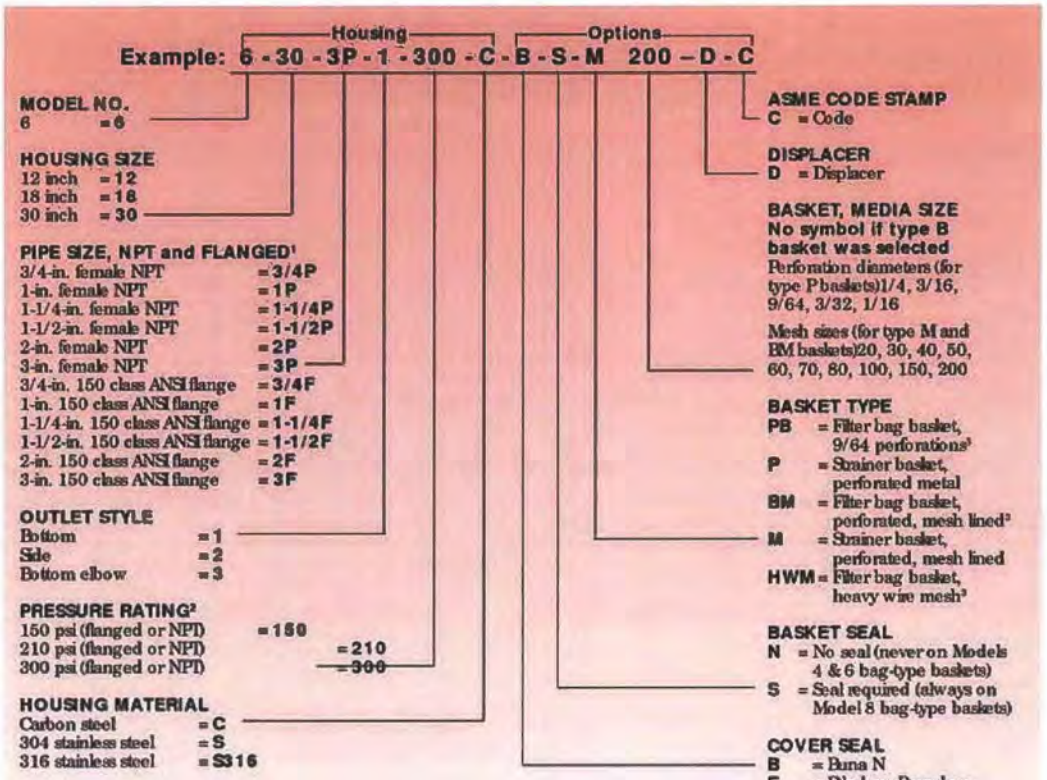

1. Flanges provided with the housing match the pressure rating of the vessel. Housings rated 150 psi have 150 class flanges. Housings rated 300 psi have 300 class flanges. ANSI B16.5 Pressure-Temperature rating tables determine flange class for ASME code housings. Consult factory.
2. Higher pressure ratings available. Consult factory.
3. Filter bags are specified separately. See page 120-130.
4. 150 psi unit has 150 class flanges. 300 psi unit has 300 class flanges. 210 psi unit available only in NPT

Section Two

Plastic Mini Plus PORTA-FEED® Base Tank

Figure 1 – *Plastic Mini Plus PORTA-FEED Base Tank*

Overview

Although chemical needs may not be large in volume for some plants, the effort and precautions required by employees to deal with them are full scale. Checking inventory, ordering supplies, wrestling drums into place, maintaining adequate storage space, and drum disposal costs and liabilities are some of the hassles encountered with drums.

The Plastic Mini Plus PORTA-FEED Base Tank (Figure 1) will remove these hassles. It is a way to let someone else do the ordering, handling and monitoring of treatment chemicals with a comprehensive service that eliminates problems associated with drums.

In short, there is nothing quite like the Plastic Mini Plus PORTA-FEED Base Tank. Only Nalco offers this hassle-free, hands-off chemical delivery system.

Benefits

The Plastic Mini Plus PORTA-FEED Base Tank is an alternative to the stainless steel PORTA-FEED Base Tank. Features include a forklift accessible containment basin, elevated pump stand, glued rather than threaded plumbing, standard PORTA-FEED level gauge, manifold and transfer hose. The outlet is flanged to permit easy field replacement of the level gauge. The specified product label and MSDS are provided with the unit.

The Plastic Mini Plus allows Nalco to meet the growing need for base tanks for products not compatible with stainless steel. It is also ideal for those environments corrosive to stainless steel. The base tank remains property of Nalco and is leased to the customer as part of the PORTA-FEED program.

Table 1 – *Benefits of the Plastic Mini Plus PORTA-FEED Base Tank program over drums*

Cost Item	Cents per pound (lb)
1. Drum disposal ($25 to 200/drum)	5 to 40
2. Drum heel and spillage (1 to 1.5 gallon/drum)	5 to 10
3. Drum handling and warehousing	5 to 10
4. Product inventory (5 to 20%)	5 to 20
Total cents per pound =	**20 to 80**
Also Included are: • lower liability • improved safety • continuous feed	

The Plastic Mini Plus PORTA-FEED Base Tank helps simplify your chemical handling while helping to improve safety and control costs.

Safety

- Helps prevent injuries resulting from handling drums
- Eliminates chemical exposure hazards by eliminating triple-rinsing, cutting, or crushing drums for disposal
- Helps prevent chemical spills

Cost Control

- Minimizes equipment damage/failure by ensuring dependable chemical feed
- Frees up facility labor from time spent moving chemical containers and replacing chemical inventory. Also helps eliminate time, hassles and costs associated with empty drum disposal.
- Helps eliminate potential future liabilities associated with landfill cleanup
- Helps reduce inventory costs by eliminating warehoused inventory

Results

- Reduces floor space required for storing drums and drum handling equipment

Figure 2 – *Transporter unit*

- Reduces the chance for chemical spills (See SARA Title III regulations)
- Assures quality of operation through consistent chemical feed and maintenance of chemical inventory

Simplicity

- Minimizes hassles and costs associated with ordering chemicals and avoids rush order situations
- Reduces the number of chemical feed problems associated with vacuum-lift feed systems

General Description

The Plastic Mini Plus PORTA-FEED Base Tank is a chemical container for use in holding chemical inventory and feeding into plant processes. The 110-gallon Plastic Mini Plus PORTA-FEED Base Tank base is delivered, fully assembled, in a box, to a customer site and hooked up to feed chemical to the customer's process. A Nalco-trained delivery specialist delivers the chemical in a 55-gallon transporter unit (Figure 2) and transfers the product into the base tank. Nitrogen pressure at 5 psig is used to transfer chemical from the transporter unit to the base tank. The delivery specialist takes the empty transporter back to Nalco for reuse.

All PORTA-FEED base tanks remain the property of Nalco Company.

Design

Each Plastic Mini Plus PORTA-FEED Base Tank has a nominal capacity of 110 gallons.

SAFETY NOTE: Each Plastic Mini Plus PORTA-FEED Base Tank is an atmospheric container and pressure is not to be applied to the base tank. **This base tank is not approved for use with flammable products.**

Use

The Plastic Mini Plus PORTA-FEED Base Tank is specially designed for use as a chemical inventory and feeding container at the application site. Each Plastic Mini Plus PORTA-FEED Base Tank should be filled with the 55-gallon transporter units. At the initial filling of the Plastic Mini Plus PORTA-FEED Base Tank, it is filled with only one 55-gallon transporter.

Feeding and transfilling accessories for a Plastic Mini Plus PORTA-FEED Base Tank are included with the unit. Complete secondary containment is available. These containment basins have been designed and built specifically for the Plastic Mini Plus PORTA-FEED Base Tank.

Return

Any Plastic Mini Plus PORTA-FEED Base Tank may be returned to Nalco by calling 800-77-PORTA (800-777-6782 or 630-305-1677) (In the United States).

Each Plastic Mini Plus PORTA-FEED Base Tank returned to Nalco must be empty, free of contamination, and in the same condition as received, less normal wear and tear.

How To Get Started

To select the right PORTA-FEED program for your needs, contact your local Nalco sales engineer.

NALCO COMPANY OPERATIONS

North America: 1601 West Diehl Road • Naperville, Illinois 60563-1198 • USA
Europe: Ir.G.Tjalmaweg 1 • 2342 BV Oegstgeest • The Netherlands
Asia Pacific: 2 International Business Park • #02-20 The Strategy Tower 2 • Singapore 609930
Latin America: Av. das Nações Unidas 17.891 • 6° Andar 04795-100 • São Paulo • SP • Brazil

www.nalco.com

PORTA-FEED, NALCO and the logo are Registered Trademarks of Nalco Company
©2005 Nalco Company All Rights Reserved 3-05

Part # 121-P01151.88

Stenner®
Peristaltic Metering Pumps

NALCO

Specification SPEC-476

Peristaltic Tube Pumps

- Pump capacities from 0.2-170 gpd; 100 psi maximum
- Self-priming; won't lose prime
- Run dry without damage
- No check valves to clog from dirt or minor debris
- Interchangeable pump tubes and subassemblies

Control Features

- Manually adjustable models in single and dual head configurations
- Proportional control with a 4-20 mA control signal for pH applications
- Programmable timer versions for the automatic dosing of bacteria, enzymes or biocide

Description

Stenner peristaltic pumps are inexpensive metering pumps designed for light industrial applications. Liquid is pumped by changing the speed of rotating rollers that form a seal and "squeeze" the Santoprene® tubing to develop up to 100 psi discharge pressure. The Classic Series allows you to adjust the pump output manually by positioning the feed rate control dial between 5 and 100% capacity in 2.5% increments. Duplex versions have two pumping heads. The output of each head can be controlled independently.

The SVP Series incorporates the capability to feed chemical in proportion to a 4-20 mA control signal for pH and flow applications.

The BDF Series has a built-in programmable timer that feeds chemical on either a 7-day or 24-hour basis. These pumps are ideal for dosing enzymes in drain line maintenance programs and biocides in industrial cooling towers and water fountains.

Figure 1 — *Stenner Peristaltic Pumps*

Peristaltic metering pumps offer many advantages in low pressure, indoor and light industrial applications. They are self-priming – won't lose prime, can run dry for short periods without damage, do not have check valves to clog from dirt or minor debris and have interchangeable pump tubes and subassemblies.

Each system includes the pump with a 115 VAC cord and accessory kit for installation.

The accessory kit contains:

- 3 connecting nuts 1/4" PVC
- 3 ferrules 1/4" PVC
- Injection check valve PVC/Santoprene
- Ceramic weight with clip
- 20 foot roll of 1/4" white suction/discharge tubing LDPE
- Spare pump tube. PVC/Santoprene. Tube size is stamped on tube fitting. Pump tubes are interchangeable across all Stenner pumps. Tube sizes 1, 2 and 7 are rated for 100 psi.
- Operation manual with complete installation and maintenance procedures.

Pump Selection Guidelines

Choose the Stenner peristaltic pump that meets your required capacity. Be sure to consider the minimum, maximum, typical and upset conditions when sizing your pump. For the BDF pumps, also consider the number of dosing events per day.

Check the chemical compatibility of the chemical program with the standard materials of construction: PVC/Santoprene/LDPE. Make sure that the system pressures plus line losses do not exceed 100 psi. Also, be certain that there is a grounded 115 VAC, 60 Hz, 15 A outlet available.

Lastly, verify that the control features available match your application needs. The Classic Series features manual control. The SVP Series will follow a 4-20 mA control signal. The BDF Series has a built-in event timer (24-hour or 7-day) to control chemical feed.

To Order

Select a standard Nalco pump whenever possible to reduce lead time. However, if you do not see a pump that meets your application needs, contact the NGES Help Desk (800-323-8483).

Order the Stenner pumps and accessories using the Nalco part number listed in Tables 1-5 on pages 4 and 5. Each pump includes an accessory kit with spare peristaltic tube. Consider ordering additional spare peristaltic tubes with the initial purchase to ensure uninterrupted operation. Order the rain roof (121-P01170.88) for outdoor installations to protect the gear motor.

Maintenance Guidelines

Follow the important guidelines below to prevent damage to the pump or chemical spills.

- Wear the appropriate personal protective equipment when working on the pump.
- Use care to relieve the pressure in the tubing to avoid spills or contact with chemicals.
- Always wipe off chemical residue from the pump and components before replacing tube.
- Check the pump tube regularly for leaks and wear. At the first sign of leakage, replace the pumping tubes and ferrules.
- Tighten the suction/discharge tubing finger tight only. Tools will damage plastic fittings.
- Inspect the suction/discharge tubing, injection point (into pipe) and injection check valve "duckbill" after any tube rupture. Clear as required.
- Follow the pump tube replacement instructions carefully to obtain the maximum tube life. Be sure that the tube is aligned in the center of the rollers and not twisted.

Installation Guidelines

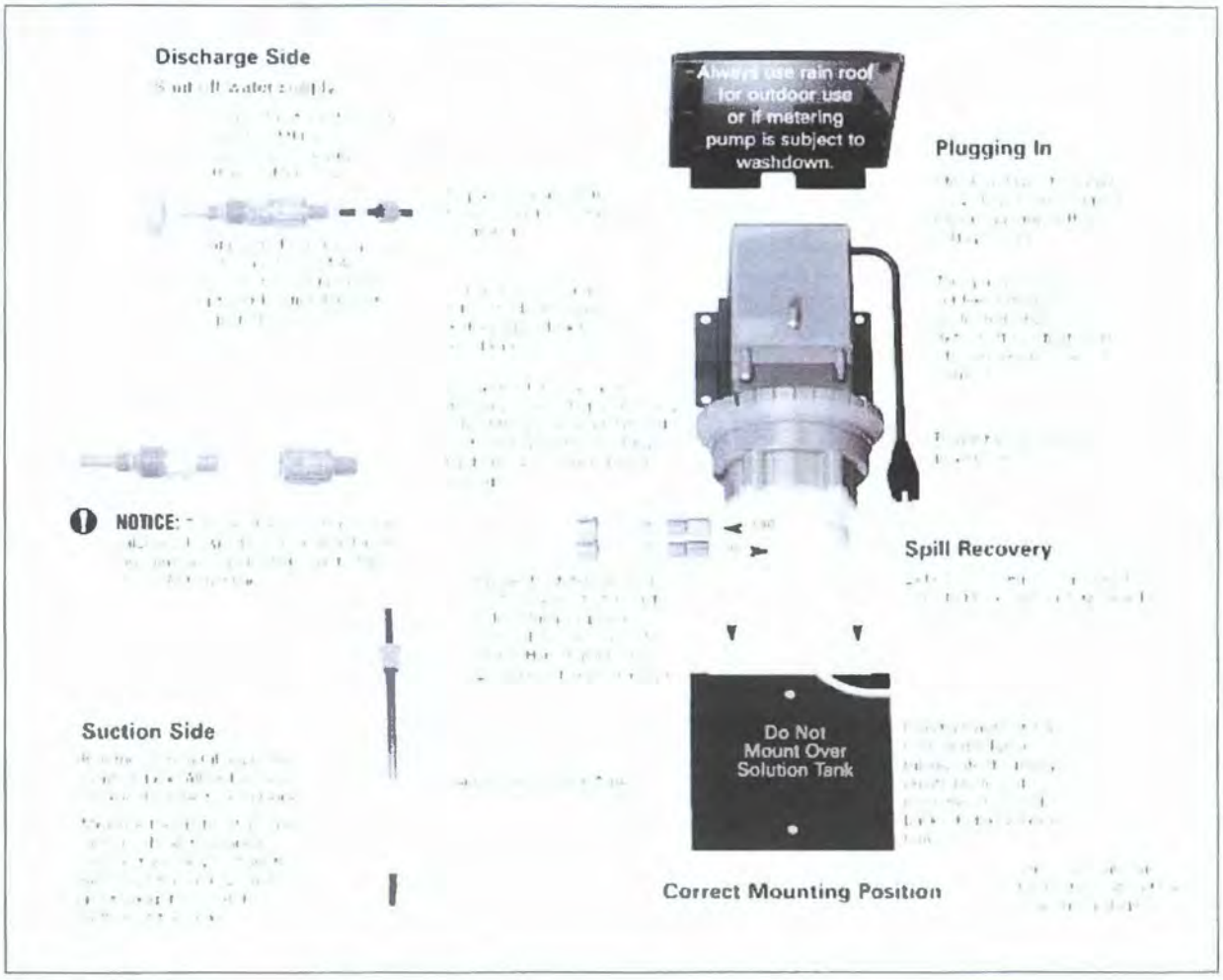

Figure 2 — *Installation*

Support

If you have any questions regarding this specification, please contact your Nalco representative. In North America, you can also contact the Nalco Global Equipment Solutions Help Desk at 800-323-8483.

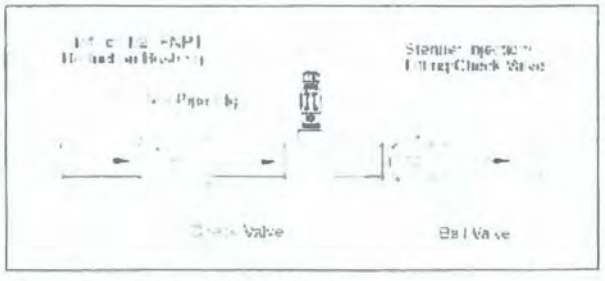

Figure 3 — *Typical Point of Injection*

Table 1 — *Classic Series Single Control*

Nalco Part Number	Capacity (gpd)	Maximum Pressure (psi)	Control Mode	Replacement Tube Number	Part Number (pkg of 2)
121-P01151.88	3	100	Single Adjustable	1	121-P01185.88
121-P01153.88	5	100	Single Adjustable	1	121-P01185.88
121-P01152.88	10	100	Single Adjustable	2	121-P01187.88
121-P01154.88	17	100	Single Adjustable	2	121-P01187.88
121-P01159.88	40	100	Single Adjustable	7	121-P01189.88

Table 2 — *Classic Series Dual Control*

Nalco Part Number	Capacity (gpd)	Maximum Pressure (psi)	Control Mode	Replacement Tube Number	Part Number (pkg of 2)
121-P01155.88	6	100	Dual Adjustable	1	121-P01185.88
121-P01157.88	10	100	Dual Adjustable	1	121-P01185.88
121-P01156.88	20	100	Dual Adjustable	2	121-P01187.88
121-P01158.88	34	100	Dual Adjustable	2	121-P01187.88

Table 3 — *SVP Series with 4-20 mA Follower*

Nalco Part Number	Capacity (gpd)	Maximum Pressure (psi)	Control Mode	Replacement Tube Number	Part Number (pkg of 2)
121-P01160.88	5	100	4-20 mA	1	121-P01185.88
121-P01161.88	17	100	4-20 mA	2	121-P01187.88
121-P01162.88	40	100	4-20 mA	7	121-P01189.88
121-P01163.88	60	25	4-20 mA	4	121-P01138.88
121-P01164.88	85	25	4-20 mA	5	121-P01139.88

Table 4 — *BDF Series with Timer*

Nalco Part Number	Capacity (gpd)	Maximum output/event (mL)	Maximum Pressure (psi)	Control Mode	Replacement Tube Number	Part Number (pkg of 2)
121-P01140.88	0.3	39	100	24 hour timer	1	121-P01185.88
121-P01141.88	1	134	100	24 hour timer	2	121-P01187.88
121-P01142.88	0.3	39	100	7 day timer	1	121-P01185.88
121-P01143.88	1	134	100	7 day timer	2	121-P01187.88

Table 5 — *Stenner Pump Accessories*

Nalco Part Number	Description
121-P01168.88	Gear Motor Complete Series 45 & 100 115V
121-P01169.88	Gear Motor Complete Series 85 & 170 115V
121-P01170.88	Rain Roof for Stenner Pumps
121-P01171.88	Mounting Shelf for Stenner Pumps
121-P01172.88	Feed Rate Control Single Head with Shaft
121-P01173.88	Feed Rate Control Dual Head with Shaft
121-P01174.88	Main Shaft Single Head Adjustable
121-P01175.88	Main Shaft Single Head Adjustable Package of 2
121-P01176.88	Pump Head with Tube #1
121-P01177.88	Pump Head with Tube #1 Package of 2
121-P01178.88	Pump Head with Tube #2
121-P01179.88	Pump Head with Tube #2 Package of 2
121-P01180.88	Pump Head with Tube #7
121-P01181.88	Pump Head with Tube #7 Package of 2
121-P01182.88	Tube Housing Only Package of 2
121-P01183.88	Roller Assembly Package of 4
121-P01184.88	Tube Housing with Cover Bush Package of 4
121-P01185.88	Pump Tube #1 with ferrules Package of 2
121-P01186.88	Pump Tube #1 with ferrules Package of 5
121-P01187.88	Pump Tube #2 with ferrules Package of 2
121-P01188.88	Pump Tube #2 with ferrules Package of 5
121-P01189.88	Pump Tube #7 with ferrules Package of 2 Single Head
121-P01190.88	Pump Tube #7 with ferrules Package of 5 Single Head
121-P01191.88	Connecting Nut 1/4" Package of 10
121-P01192.88	Connecting Nut with Adapter 3/8" Package of 2
121-P01193.88	Ferrule 1/4" Package of 10
121-P01194.88	Injection Fitting with nut and ferrule Package of 5
121-P01195.88	Injection Check Valve 1/4"
121-P01196.88	Injection Check Valve 3/8"
121-P01197.88	Accessory Kit #1 Tube 1/4" White Suction/Discharge
121-P01198 88	Accessory Kit #2 Tube 1/4" White Suction/Discharge
121-P01199.88	Accessory Kit #7 Tube 1/4" White Suction/Discharge
121-P01137.88	Tubing Polyethylene 1/4" 100 feet black UV

NALCO COMPANY OPERATIONS

North America: 1601 West Diehl Road • Naperville, Illinois 60563-1198 • USA
Europe: Ir G Tjalmaweg 1 • 2342 BV Oegstgeest • The Netherlands
Asia Pacific: 2 International Business Park • #02-20 The Strategy Tower 2 • Singapore 609930
Latin America: Av das Nações Unidas 17 891 • 6° Andar 04795-100 • São Paulo • SP • Brazil

www.nalco.com

Santoprene is a Registered Trandemark of Monsanto Company
Stenner is a Registerod Trademark of G. H Stenner & Company
NALCO and the logo are Registered Trademarks of Nalco Company
©2004 Nalco Company All Rights Reserved 6-04

Corporation Stop Injector

NALCO

Specification SPEC-240

- Injects chemical away from pipe walls, eliminating localized corrosion at the injection point, and improves chemical dispersion
- Can be removed without total system shutdown and drainage
- Safety chain prevents blowout during installation and removal under system pressure

Description

Corporation stop injectors provide two distinct advantages over simple tap connections into large main pipes:

1. The nozzle may be extended for injection near the center of the large main for more effective chemical dispersion.
2. The nozzle may be removed and the corporation stop closed without interrupting the main flow.

The chain provided is used to help prevent the nozzle assembly from being completely withdrawn and to hold it against back pressure. It should always be used. When extended to its full length, it permits the nozzle to be withdrawn enough so that the corporation stop may be closed, sealing the injection point. The chain may then be disconnected and the nozzle removed. (See Figures 1 and 2.)

Nalco offers the corporation stop in two sizes and two materials of construction for varied applications.

To Order

Contact your local Nalco sales engineer or our Nalco Customer Service at 1-800-288-0879. Order by Nalco Part Numbers. All items are shipped FOB Chicago, IL.

Figure 1 — *Corporation Stop Injector (CPVC)*

Figure 2 — *Corporation Stop Injector (polypropylene)*

Specifications

Nalco Part No.:	231-P6060.88	231-P6037.88
Injection Nozzle:	CPVC Tube	Polypropylene
Body:	Brass	Bronze
Maximum Pressure:	100 psi	125 psi
Maximum Temperature:	120°F (49°C)	110°F (38°C)
Shipping Weight:	2.5 lb	4.0 lb
Valve Connection:	3/4 in. MNPT	1 in. MNPT
Nozzle Connection:	1/2 in. FNPT	1/2 in. FNPT

Installation

1. Inspect the corporation stop injector assembly for any possible damage incurred during shipment.
2. Loosen compression nut and remove the injector nozzle assembly.
3. Close the corporation stop valve.
4. Prepare the main to be treated to accept male pipe threads on the corporation stop valve. Refer to the recommended injector nozzle mounting position (Figure 3).
5. Apply thread sealant to male pipe threads on the closed corporation stop valve and install into the main.
6. Slide compression nut and seal onto the injector nozzle as illustrated in Figures 4 and 5.
7. Insert the injector nozzle into the corporation stop valve until the end of the nozzle is touching the closed plug or ball inside the corporation stop valve.
8. Place the safety line retainer ring onto male pipe threads of the injection check valve (not included with this assembly).
9. Apply thread sealant to male pipe threads on the injection check valve and install with the attached safety line into the 1/2" FNPT injector nozzle check valve connection.
10. Securely tighten compression nut onto compression adapter threads on the corporation stop valve.
11. Slowly open the corporation stop valve.
    CAUTION: Do not place your hands between the injector nozzle assembly and safety line during this operation. If compression nut is not securely tightened, pressure can cause the injector nozzle assembly to suddenly back out and pull the safety line tight against the nozzle.
12. Carefully loosen compression nut just enough to allow the injector nozzle assembly to be pushed to the desired chemical dispersion depth in the main.
13. With the injector nozzle at the desired depth in the main, securely tighten compression nut.

Removal

1. Carefully loosen compression nut as required to allow the injector nozzle assembly to be slowly withdrawn to the point where the corporation stop valve can be closed.
2. Close the corporation stop valve.
3. Remove the injection check valve and safety line.
4. Loosen compression nut and remove the injector nozzle assembly.

Support

If you have any questions regarding this specification, please contact your local Nalco sales engineer. In North America, you can also contact the Equipment Solutions Technical Support Group at 1-800-323-8483.

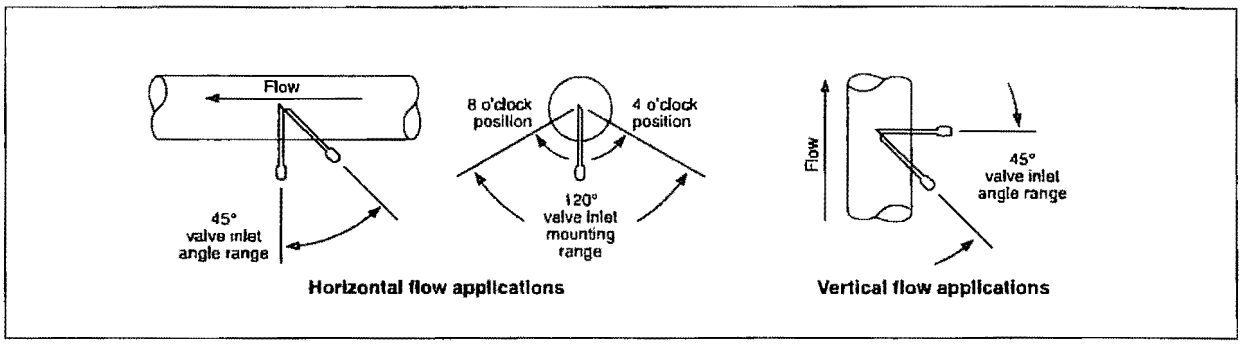

Figure 3 — *Recommended injector nozzle mounting positions*

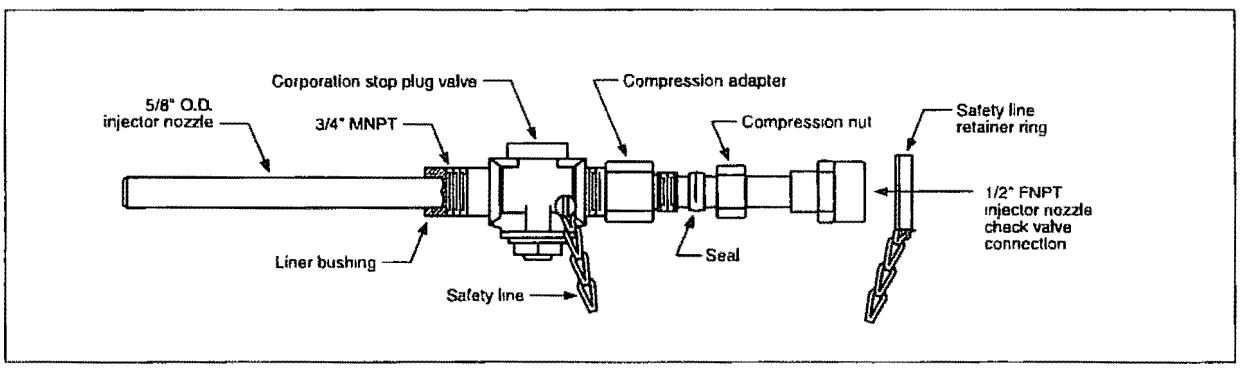

Figure 4 — *3/4 in. MNPT Corporation Stop Injector (Nalco Part Number 231-P6060.88)*

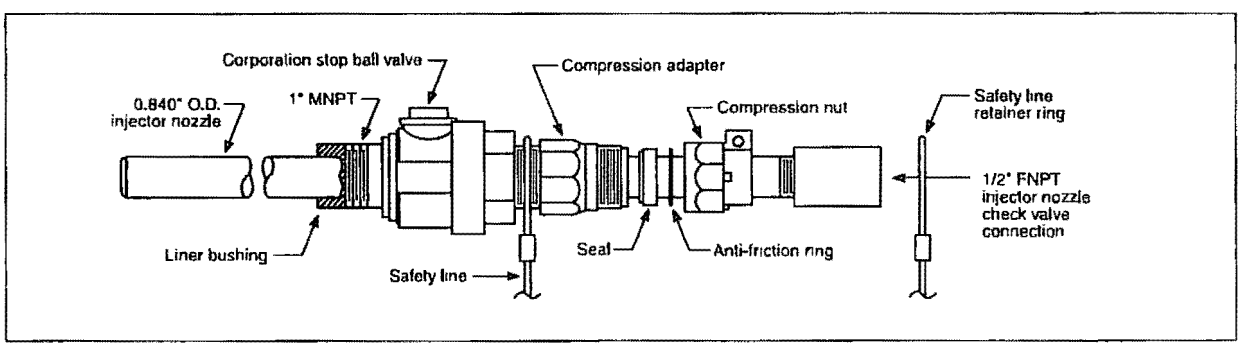

Figure 5 — *1 in. MNPT Corporation Stop Injector (Nalco Part Number 231-P6037.88)*

NALCO COMPANY OPERATIONS

North America: 1601 West Diehl Road • Naperville, Illinois 60563-1198 • USA
Europe: Ir.G.Tjalmaweg 1 • 2342 BV Oegstgeest • The Netherlands
Asia Pacific: 2 International Business Park • #02-20 The Strategy Tower 2 • Singapore 609930
Latin America: Av das Nações Unidas 17.891 • 6° Andar 04795-100 • São Paulo • SP • Brazil

www.nalco.com

NALCO and the logo are Registered Trademarks of Nalco Company
©1995, 2004 Nalco Company All Rights Reserved 11-04

NALQUILL® Injector

NALCO

Specification SPEC-253

- Three materials of construction available to provide compatibility with most chemicals
- Extended length versions available for large diameter pipes — up to 36 inches
- Disperses chemical product into liquid, gas or mixed streams
- Minimizes contact of concentrated chemicals with pipe or tank walls

Description

The NALQUILL Injector (Figure 1) is used to evenly disperse liquid chemicals into pipelines. When properly installed, the NALQUILL injector introduces the chemical treatment into the bulk of the fluid, providing effective dispersion while preventing possible localized corrosion or erosion.

Standard length NALQUILL injectors are designed for pipelines of 6-inch diameter or less. Extended versions (231-P4612.88, 231-P4613.88) can accommodate up to 36-inch diameter pipes. Typically, extended NALQUILL injectors are field cut to position the stinger in the center of the pipeline and may be slotted for vapor or gas flows.

Special alloy NALQUILL injectors (231-P4611.88 and 231-P4613.88) and the reinforced Kynar NALQUILL (231-P4614.88) are designed for enhanced corrosion resistance and mechanical strength when feeding corrosive products such as concentrated sulfuric acid, which gives off heat when diluted. NALQUILL 231-P4615.88 is designed with a 12-inch, 316 SS special no-drip shield to feed oxygen scavengers between the dome and the storage feed tank.

Spring-loaded NALQUILL injectors (231-P4636.88, 231-P4637.88, 231-P4639.88) incorporate a one-piece body and help ensure better seating of the ball check, particularly in non-vertically oriented installations. 231-P4639.88 comes with a pre-slotted tip for better dispersion into vapor phase streams.

Figure 1 — *NALQUILL Injectors*

To Order

Contact your local Nalco representative or our Nalco Customer Service at 1-800-288-0879. Order the NALQUILL Injector by its Nalco Part Number.

Nalco Part No.	Description
231-P4610.88	6" NALQUILL, 304 SS
231-P4611.88	6" NALQUILL, alloy 20
231-P4612.88	18" NALQUILL, 304 SS
231-P4613.88	18" NALQUILL alloy
231-P4614.88	12" Reinforced Kynar NALQUILL
231-P4615.88	12" NALQUILL 316 SS with no-drip shield
231-P4636.88	6" NALQUILL with spring-loaded ball check, 316 SS, 1000 psi
231-P4637.88	6" NALQUILL with spring-loaded ball check, 316 SS, 2000 psi
231-P4639.88	6" NALQUILL with spring-loaded ball check, slotted tip, 316 SS, 2000 psi

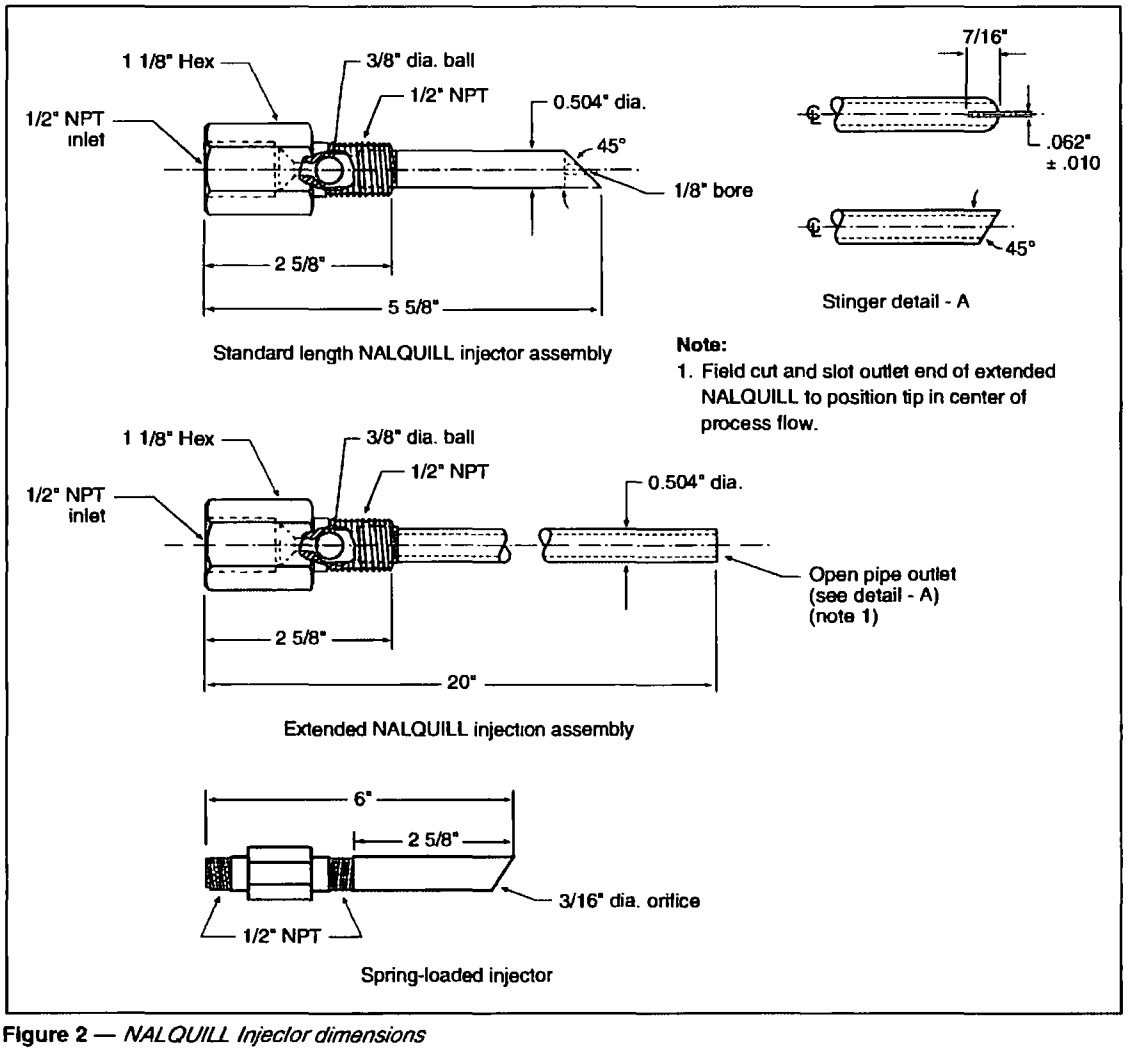

Figure 2 — *NALQUILL Injector dimensions*

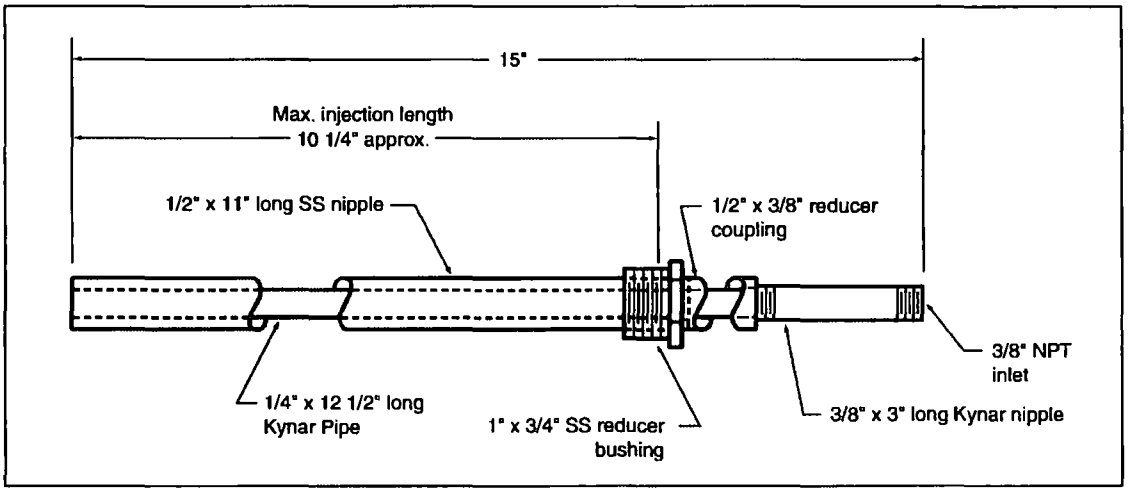

Figure 3 — *Reinforced Kynar NALQUILL dimensions (231-P4614.88)*

Specifications

Dimensions: See Figures 2, 3 and 4

Weight: 1 lb (approx.)

Connections:

	Standard NALQUILL	Spring-loaded NALQUILL	Kynar NALQUILL
Inlet	1/2" FNPT	1/2" MNPT	3/8" MNPT
Pipe fitting	1/2" MNPT	1/2" MNPT	1" MNPT

Materials of Construction:

	Hex nut/ body	Ball check	Stinger
231-P4610.88	304 SS	304 SS	304 SS
231-P4611.88	Alloy 20 SS	Ceramic	Hastelloy-C
231-P4612.88	304 SS	304 SS	304 SS
231-P4613.88	Alloy 20 SS	Ceramic	Hastelloy-C
231-P4614.88	316 SS	None	Kynar w/316 SS shroud
231-P4615.88	316 SS	316 SS	316 SS
231-P4636.88	316 SS	316 SS	316 SS
231-P4637.88	316 SS	316 SS	316 SS
231-P4639.88	316 SS	316 SS	316 SS

The hex nut or body is stamped and notched to indicate material of construction and orientation of stinger after insertion.

Maximum pressure: 3000 psi for metal
150 psi for Kynar

Maximum Temperature: 500°F (260°C) for metal
200°F (93°C) for Kynar

Installation

Although the standard length NALQUILL Injector is sized for a six-inch pipe, it can be bushed out or cut to fit smaller pipes. See Figure 5. Install it so the tip extends approximately to the center of the pipe.

Align the NALQUILL so the oval opening of the tip faces downstream. See Figure 6. When manufactured, the material of construction is stamped on the flat side of the hex nut that corresponds with the long side of the quill. This convention should be maintained if possible whenever the quill is reinstalled.

For dispersing a chemical into a vapor phase stream, a slot should be cut on the long side of the tip. See Figure 7. This will allow the vapor to force the chemical through the slot, converting it into a fine mist. In this application, the orientation of the quill must be 180° from that shown in Figure 6.

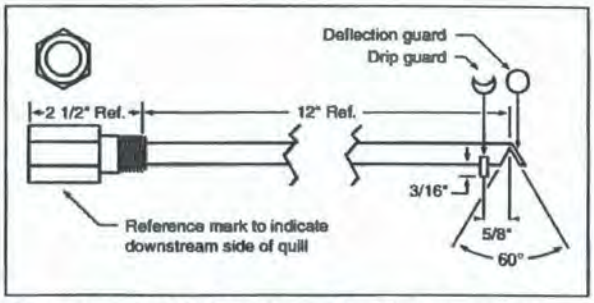

Figure 4 — *NALQUILL with no-drip shield dimensions (231-P4615.88)*

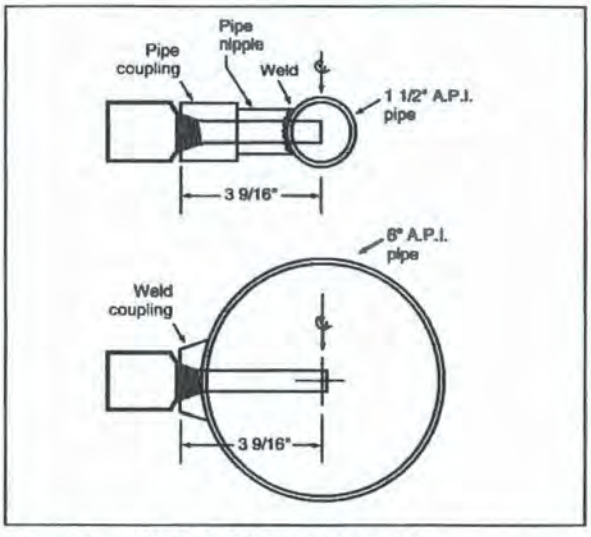

Figure 5 — *NALQUILL Injector installation*

Figure 8 illustrates acceptable mounting orientations for vertical and horizontal flow applications. Use only the bottom 120° of the pipe cross section so the unit injects upward into the flow if possible. For vertical pipe applications, make sure the unit is angled upwards. Installation on pipes with downard flow is not recommended.

A check valve is recommended to be installed with NALQUILL injector 231-P4614.88 to prevent backflow. Care should be taken whenever breaking connections. Appropriate personal protective equipment (e.g., goggles, gloves) should be worn when checking or disconnecting injector connections. Release chemical line pressure using a manual pressure relief valve on the pump discharge.

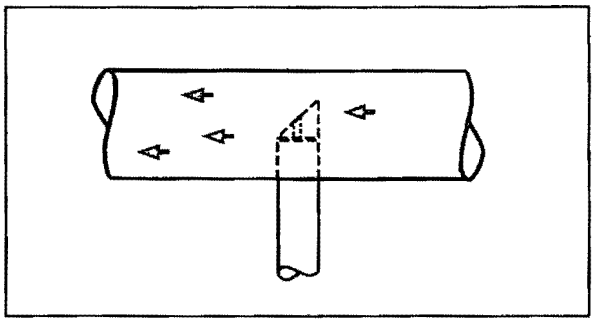

Figure 6 — *Proper quill alignment*

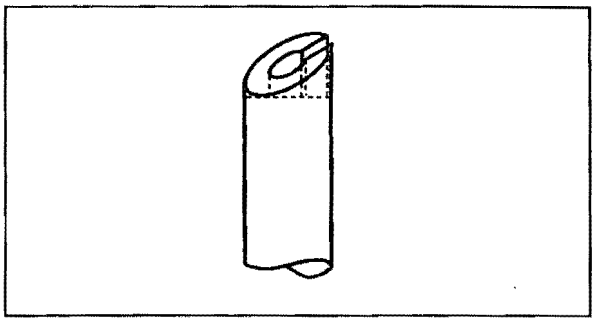

Figure 7 — *Cut tip for atomizing chemical into vapor phase stream*

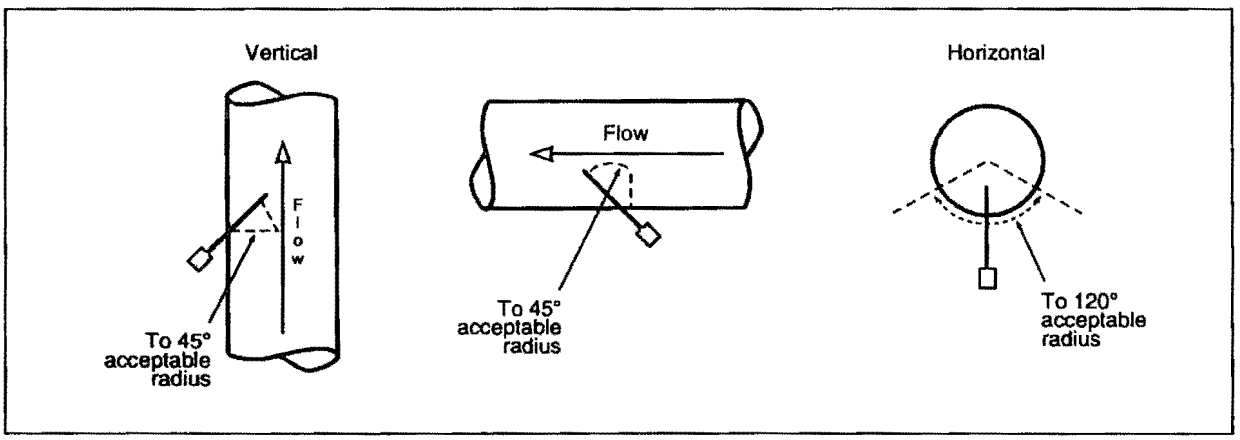

Figure 8 — *Proper quill orientation*

NALCO COMPANY OPERATIONS

North America: 1601 West Diehl Road • Naperville, Illinois 60563-1198 • USA
Europe: Ir.G.Tjalmaweg 1 • 2342 BV Oegstgeest • The Netherlands
Asia Pacific: 2 International Business Park • #02-20 The Strategy Tower 2 • Singapore 609930
Latin America: Av. das Nações Unidas 17.891 • 6° Andar 04795-100 • São Paulo • SP • Brazil

www.nalco.com

Kynar is a trademark of Elf Atofina North America
NALQUILL, NALCO and the logo are Registered Trademarks of Nalco Company
©1979, 2004 Nalco Company All Rights Reserved 8-04

Product Bulletin

NALCO® 8357

Dispersant

PRODUCT DESCRIPTION AND APPLICATION

NALCO 8357 is an organic polymer designed to provide scale, deposit and fouling control in once-through and recirculating cooling water systems. It is particularly effective in inhibiting calcium carbonate scale and for dispersing suspended solids such as mud, silt and iron oxides.

PHYSICAL & CHEMICAL PROPERTIES

These properties are typical. Refer to SECTION 9 of the Material Safety Data Sheet (MSDS) for the most current data.

Appearance	Clear to light yellow
Physical State	Liquid
Odor	Organic
Density	10.2 lb/gal [1.22 kg/l]
Specific Gravity @ 68°F [20°C]	1.21 - 1.23
pH (neat)	3.6 - 4.0
Viscosity @ 60°F [15°C]	51 cp
Freeze Point	20°F [-7°C]
Flash Point (PMCC)	None
Freeze-Thaw Recovery	Complete
Solubility in Water	Complete
Volatile Organic Carbon (VOC)	0.3 lb/gal [0.36 kg/l]

ACTIVE CONSTITUENTS

Component	Function
Anionic Polymer	General Dispersant and $CaCO_3$ Stabilization

REGULATORY APPROVALS

NALCO 8357 is intended for industrial use only. It must not be fed to potable water systems.

This product has been certified as KOSHER/PAREVE for year round use, including the Passover season, by the Chicago Rabbinical Council.

Refer to the Material Safety Data Sheet (MSDS), SECTION 15 for the most

recent information on approvals.

MATERIALS OF COMPATIBILITY

Compatible	Not Compatible
Buna-N	304 Stainless Steel (RCC*9014)
Polyurethane o-rings	Brass
Polyethylene	Neoprene o-rings
Polypropylene	Viton o-rings
CPVC	Hypalon o-rings
PORTA-FEED liner (RCC*9036)	Coated steel drum (phenolic, RCC*635)
Plasite 4300 liner (vinyl ester resin)	Plasite 7122 liner (epoxy phenolic)
Blue plastic drum (HDPE, RCC*625)	EPDM o-rings

DOSAGE AND FEEDING

For complete dosage and feeding recommendations, consult your Nalco sales engineer.

NALCO 8357 should be fed via a closed feed system. A closed feed system is defined as a system in which fluid is moved from a closed storage vessel into a treated media without exposure to the atmosphere except through normal venting or pressure relief devices.

ENVIRONMENTAL AND TOXICITY DATA

Biological Oxygen Demand (5-day BOD_5)	1,185 ppm
Chemical Oxygen Demand (COD)	340,000 ppm
Total Organic Carbon (TOC)	Not Available

Refer to SECTIONS 11 and 12 of the product's Material Safety Data Sheet (MSDS) for all mammalian and aquatic toxicity information.

SAFETY AND HANDLING

Before using this product, please refer to SECTION 8 of the Material Safety Data Sheet (MSDS) for proper personal protective equipment (PPE) and SECTION 3 for health effects.

NALCO 8357 is an acidic product and can cause eye and skin irritation. Chemical resistant gloves and safety goggles should be worn when handling **NALCO 8357**. Avoid breathing the solution spray. Do not take internally.

STORAGE

NALCO 8357 should be stored in a location where the product temperature can be kept in a range between 20°F [-7°C] and 120°F [49°C]. In cold climates, heat tracing and insulation of exposed containers and transfer lines may be necessary since the product becomes very thick when the ambient temperature reaches 40°F [4°C].

Recommended in-plant storage limit is one year. Refer to the Material Safety Data Sheet (MSDS), SECTION 7, for the most current data.

REMARKS

If you need assistance or more information on this product, please call your nearest Nalco Representative. For more news about Nalco Company, visit our website at www.nalco.com.

For **Medical and Transportation Emergencies** involving Nalco products, please see the Material Safety Data Sheet for the phone number.

ADDITIONAL INFORMATION

PORTA-FEED, NALCO, the Tagline and Logo are trademarks of Nalco Company (11-20-2007)

Nalco Company, 1601 West Diehl Road, Naperville, Illinois 60563-1198

Subsidiaries and Affiliates in Principal Locations Around the World
©2004 Nalco Company All Rights Reserved

Section Three

GRUNDFOS **INSTRUCTIONS**

SP4”

4-Inch Stainless Steel Submersible Pumps

(US) Installation and operating instructions

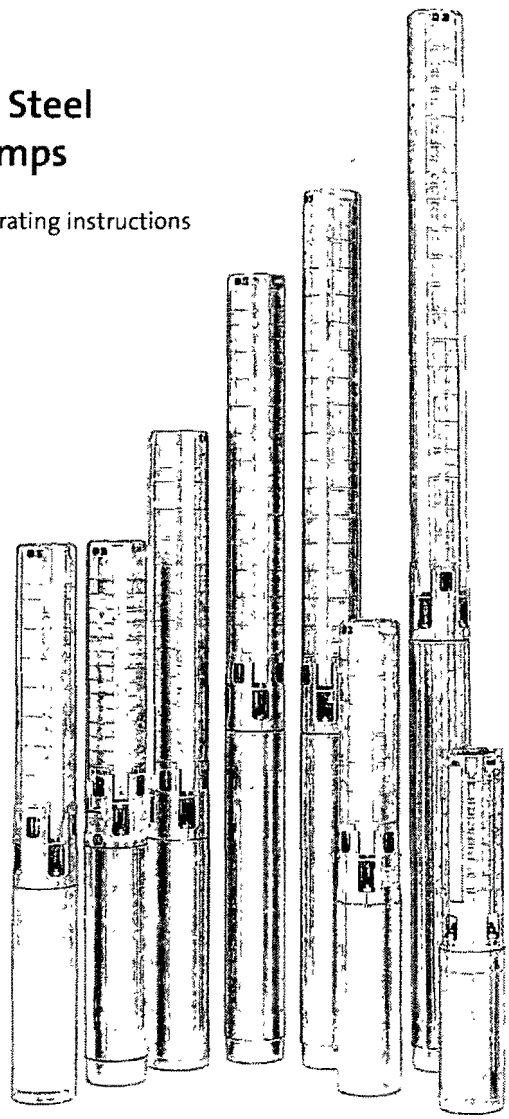

WATER QUALITY
DRINKING WATER
SYSTEM COMPONENTS
ANSI/NSF 61
65 GM
30°C/86°F
PUMP END ONLY

Please leave these instructions with the pump for future reference.

BE›THINK›INNOVATE›

GRUNDFOS

SAFETY WARNING

WARNING: Reduced risk of electric shock during operation of this pump requires the provision of acceptable grounding. If the means of connection to the supply connected box is other than grounded metal conduit, ground the pump back to the service by connecting a copper conductor (at least the size of the circuit supplying the pump) to the grounding screw provided within the wiring compartment.

NOTICE: This product is designes for pumping water only. Third party agency evalustions are based on pumping water only.

Pre-Installation Checklist

1. Well Preparation

If the pump is to be installed in a new well then the well should be fully developed and bailed or blown free of cuttings and sand. The stainless steel construction of the GRUNDFOS submersibles make it resistant to abrasion; however, no pump made of any material can forever withstand the destructive wear that occurs when constantly pumping sandy water.

If this pump is used to replace an oil-filled submersible or oil-lubricated line-shaft turbine in an existing well, the well must be blown or bailed clear of oil.

2. Make Sure You Have The Right Pump

Determine the maximum depth of the well, and the draw-down level at the pump's maximum capacity. Pump selection and setting depth should be based on this data.

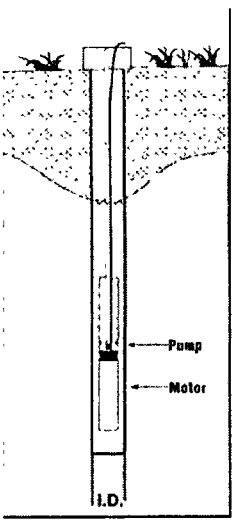

3. Pumped Fluid Requirements

CAUTION: Submersible well pumps are designed for pumping clear, cold water; free of air or gases. Decreased pump performance and life expectancy can occur if the water is not cold, clear or contains air or gasses. Water temperature should not exceed 102°F.

A check should be made to ensure that the installation depth of the pump will always be at least three feet below the maximum drawdown level of the well. The bottom of the motor should never be installed lower than the top of the screen or within five feet of the well bottom.

Ensure that the requirement for minimum flow past the motor is met, as shown in the table below:

Minimum Water Flow Requirements for Submersible Pump Motors

MINIMUM DIAMETER	CASING OR SLEEVE I.D. IN INCHES	MIN. GPM FLOW PASSING THE MOTOR
4-Inch	4	1.2
	5	7
	6	13
	7	21
	8	30

NOTES: For proper motor cooling, a flow inducer or sleeve must be used if the water enters the well above the motor or if there is insufficient water flow past the motor. The minimum water velocity past 4" motors is 0.25 feet per second

PRE-INSTALLATION CHECKLIST

4. Splicing the Motor Cable

If the splice is carefully made, it will be as efficient as any other portion of the cable, and will be completely watertight. There are a number of cable splicing kits available today – epoxy filled, rubber-sealed and so on. Many perform well if the manufacturer's directions are followed carefully. If one of these kits is not used, we recommend the following method for splicing the motor cable.

Examine the motor cable and drop cable carefully for damage. Cut the motor leads off in a staggered manner. Cut the ends of the drop cable so that the ends match up with the motor leads. Be sure to match the colors. Strip back and trim off one-half inch of insulation from each lead, making sure to scrape the wire bare to obtain a good connection. Be careful not to damage the copper conductor when stripping off the insulation. Insert a properly sized Sta-kon-type connector on each pair of leads, again making sure that colors are matched. Using Sta-kon crimping pliers, indent the lugs. Be sure to squeeze down hard on the pliers, particularly when using large cable. Form a piece of electrical insulation putty tightly around each Sta-Kon. The putty should overlap on the insulation of the wire. Use a good quality tape such as ***#33 Scotch Waterproof*** or ***Plymouth Rubber Company Slipknot Grey***. Wrap each wire and joint tightly for a distance of about 2-1/2 inches on each side of the joint. Make a minimum of four passes over each joint and overlap each pass approximately one inch to assure a completely watertight seal.

INSTALLATION PROCEDURES

1. Attach the Pump to the Motor

When attaching the pump to the motor we recommend the pump be bolted down in a cross pattern around the four bolts. Starting from the back (opposite the cable opening) and using a cross pattern, tighten the motor bolts to 13.5 ft-lbs, using progressive tightening until torque is met. (See figure 1 for example).

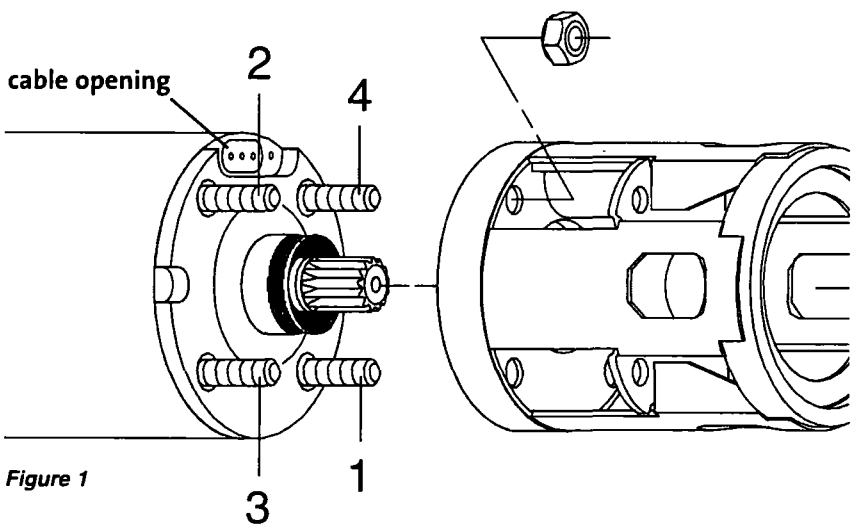

Figure 1

INSTALLATION PROCEDURES

2. Attach the Pump to the Pipe

A back-up wrench should be used when riser pipe is attached to the pump. The pump should only be gripped by the flats on the top of the discharge chamber. Under no circumstances grip the body of the pump, cable guard or motor. When tightened down, the threaded end of the first section of the riser pipe or the nipple must not come in contact with the check valve retainer in the discharge chamber of the pump. After the first section of the riser pipe has been attached to the pump, the lifting cable or elevator should be clamped to the pipe. Do not clamp the pump. When raising the pump and riser section, be careful not to place bending stress on the pump by picking it up by the pump-end only. It is recommended that plastic-type riser pipe be used only with the smaller domestic submersibles. The manufacturer or representative should be contacted to ensure the pipe type and physical characteristics are suitable for this use. Use the correct joint compound recommended by the specific pipe manufacturer. Besides making sure that points are fastened, we recommend the use of a torque arrestor when using plastic pipe.

3. Lower the Pump Into the Well

Make sure the electrical cables are not cut or damaged in any way when the pump is being lowered in the well. Do not use the power cables to support the weight of the pump.

To protect against surface water entering the well and contaminating the water source, the well should be finished off above grade utilizing a locally approved well seal or pitless adaptor unit. We recommend that steel riser pipes always be used with the larger submersibles. A pipe thread compound should be used on all joints. Make sure that the joints are adequately tightened in order to resist the tendency of the motor to loosen the joints when stopping and starting.

The drop cable should be secured to the riser pipe at approximately every 10 ft/3 m to prevent sagging, looping and possible cable damage. Nylon cable clips or waterproof tape may be used. The cable splice should be protected by securing it with clips or tape just above each joint.

Figure 2 ***Figure 3***

IMPORTANT: *Plastic pipe tends to stretch under load. This stretching must be taken into account when securing the cable to the riser pipe. Leave three to four inches of slack between clips or taped points. This tendency for plastic pipe to stretch will also affect the calculation of the pump setting depth. As a general rule, you can estimate that plastic pipe will stretch to approximately 2% of its length. When plastic riser pipe is used, it is recommended that a safety cable be attached to the pump to lower and raise it. The discharge chamber of GRUNDFOS 4-inch submersibles is designed to accommodate this cable. (See Figures 2 & 3.)*

Check Valves: A check valve should always be installed at the surface of the well and one at a maximum of 25 feet above static water level. In addition, for installations deeper than 200 feet, check valves should be installed at no more than 200 foot intervals.

INSTALLATION PROCEDURES

4. Electrical Connections

WARNING: Reduced risk of electric shock during operation of this pump requires the provision of acceptable grounding. If the means of connection to the supply connected box is other than grounded metal conduit, ground the pump back to the service by connecting a copper conductor (at least the size of the circuit supplying the pump) to the grounding screw provided within the wiring compartment.

Verification of the electrical supply should be made to ensure the voltage, phase and frequency match that of the motor. Motor electrical data can be found on page 6. If voltage variations are larger than ± 10%, do not operate the pump. Single-phase motor control boxes should be connected as shown on the wiring diagram mounted on the inside cover of the control box supplied with the motor. The type of wire used between the pump control boxes should be approved for submersible pump application. The conductor insulation should be type RW, RUW, TW or equivalent.

A high-voltage surge arrestor should be used to protect the motor against lightning and switching surges. Lightning voltage surges in power lines are caused when lightning strikes somewhere in the area. Switching surges are caused by the opening and closing of switches on the main high-voltage distribution power lines.

The correct voltage-rated surge arrestor should be installed on the supply (line) side of the control box or starter (See Figure 4a & 4b). The arrestor must be grounded in accordance with the National Electric Code and local governing regulations.

PUMPS SHOULD NEVER BE STARTED UNLESS THE PUMP IS TOTALLY SUBMERGED. SEVERE DAMAGE MAY BE CAUSED TO THE PUMP AND MOTOR IF THEY ARE RUN DRY.

The control box shall be permanently grounded in accordance with the National Electric Code and local governing codes or regulations. The ground wire should be a bare stranded copper conductor at least the same size as the drop cable wire size. Ground wire should be as short a distance as possible and securely fastened to a true grounding point. True grounding points are considered to be: a grounding rod driven into the water strata; steel well casing submerged into the water lower than the pump setting level; and steel discharge pipes without insulating couplings. If plastic discharge pipe and well casing are used, a properly sized bare copper wire should be connected to a stud on the motor and run to the control panel. Do not ground to a gas supply line. Connect the grounding wire to the ground point first, then to the terminal in the control box.

Single Phase Hookup

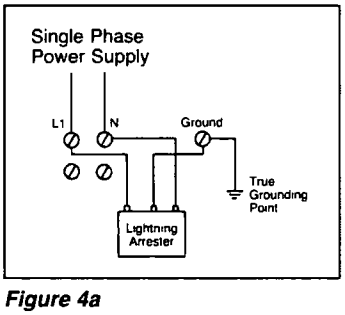

Figure 4a

Three Phase Hookup

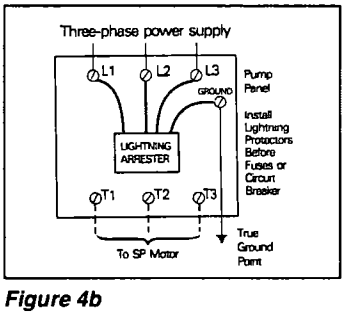

Figure 4b

INSTALLATION PROCEDURES

Single-Phase 2-Wire Wiring Diagram for Submersible Motors

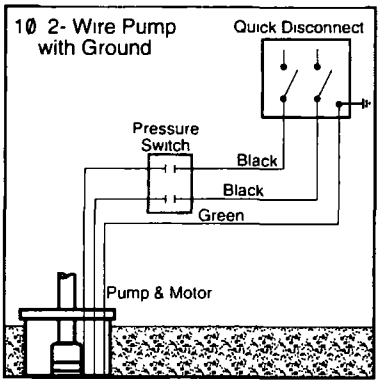

Three-Phase Wiring Diagram for Submersible Motors

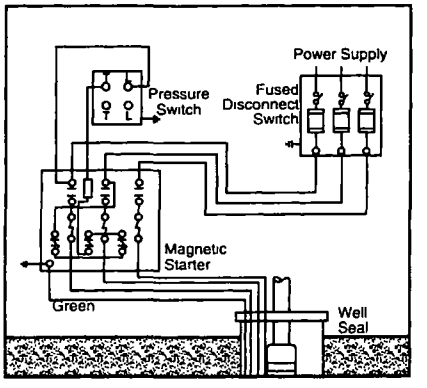

Single-Phase 3-Wire Control Box for Submersible Motors

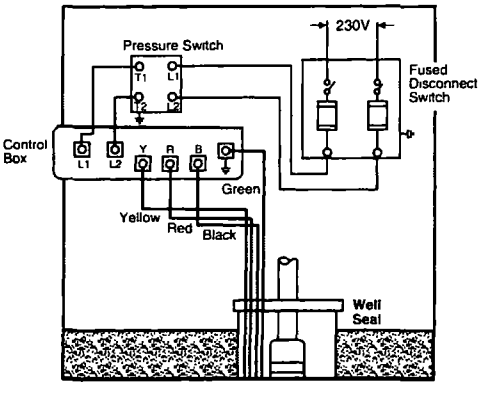

4. Starting the Pump for the First Time

A. Attach a temporary horizontal length of pipe to the riser pipe.
B. Install a gate valve and another short length of pipe to the temporary pipe.
C. Adjust the gate valve one-third of the way open.
D. Verify that the electrical connections are in accordance with the wiring diagram.
E. After proper rotation has been checked, start the pump and let it operate until the water runs clear of sand, silt and other impurities.
F. Slowly open the valve in small increments as the water clears until the valve is all the way open. The pump should not be stopped until the water runs clear.
G. If the water is clean and clear when the pump is first started, the valve should still be opened until it is all the way open.

MOTOR INFORMATION

Grundfos motors specifications

1- Phase motors

HP	Ph	Volt	Service factor	Amperage		Full load		Max thrust (lbs)	Line-to-Line resistance ( )		KVA code	Nameplate no
				SF	Start	Eff (%)	Pwr fact.		Blk-Yel	Red-Yel		
4-inch, single phase, 2-wire motors (control box not required)												
1/3	1	230	1 75	4 6	25 7	59	77	900	6 8-8.2		S	79952101
1/2	1	115	1 60	12 0	55	62	76	900	1 1-1 3		R	79922102
1/2	1	230	1 60	6 0	34 5	62	76	900	5 2-6 3		R	79952102
3/4	1	230	1 50	8 4	40 5	62	75	900	3 2-3 8		N	79952103
1	1	230	1 40	9 8	48 4	63	82	900	2 5-3 1		M	79952104
1 1/2	1	230	1 30	13 1	62	64	85	900	1 9-2 3		L	79952105
4-inch, single phase, 3-wire motors												
1/3	1	115	1 75	9 0	29	59	77	900	1 55-1 9	2 4-3	M	79423101
1/3	1	230	1 75	4 6	14	59	77	900	6 8-8 3	17 3-21 1	L	79453101
1/2	1	115	1 60	12 0	42 5	61	76	900	0 9-1 1	1 9-2 35	L	79423102
1/2	1	230	1 60	6 0	21 5	62	76	900	4 7-5 7	15 8-19 6	L	79453102
3/4	1	230	1 50	8 4	31 4	62	75	900	3 2-3 9	14-17 2	L	79453103
1	1	230	1 40	9 8	37	63	82	900	2 8-3 1	10 3-12 5	K	79453104
1 5	1	230	1 30	11 6	45 9	69	89	900	1 9-2 3	7 8-9 6	H	79453105
2	1	230	1.25	13 2	57	72	86	1500	1 5-1 8	3 4-4 1	G	79454506
3	1	230	1 15	17 0	77	74	93	1500	1 2-1 4	2 45-3	F	79454507
5	1	230	1 15	27 5	110	77	92	1500	0 65-0 85	2 1-2 6	F	79454509

3-Phase motors

HP	Ph	Volt	Service factor	Amperage		Full load		Max. thrust (lbs)	Line-to-Line resistance ( )		KVA code	Nameplate no
				SF	Start.	Eff. (%)	Pwr fact.		Blk-Yel	Red-Yel		
4-inch, three phase, 3-wire motors												
1 1/2	3	230	1 30	7 3	40 3	75	72	900	3 9		K	79302005
		460	1 30	3 7	20 1	75	72	900	15 9		K	79362005
		575	1 30	2 9	16 1	75	72	900	25 2		K	79392005
3	3	230	1 25	8 7	48	76	75	900	3 0		J	79302006
		460	1 25	4 4	24	76	75	900	12 1		J	79362006
		575	1 25	3 5	19 2	76	75	900	18 8		J	79392006
3	3	230	1 15	12 2	56	77	75	900	2 2		H	79302006
		460	1 15	6 1	28	77	75	900	9 0		H	79362007
		575	1.15	4 8	22	77	75	900	13 0		H	79395507
5	3	208/230	1 15	18 6/17 4	108	80	82	1500	1 2		H	79304509
		440/460	1 15	8 65/8 65	54	80	82	1500	5 0		H	79354509
		575	1 15	7 9	54	80	82	1500	7 3		H	79394509
7 1/2	3	208/230	1 15	27 0/25 0	130	81	82	1500	0 84		H	79305511
		440/460	1 15	12 8/12 6	67	81	82	1500	3 24		J	79355511
		575	1.15	10 6	53	81	82	1500	5.2		J	79395511
10	3	440/460	1 15	18 0/18 6	90	81	80	1500	1 16		H	79355512
		575	1 15	14 4	72	81	80	1500	1 84		H	79395512

*All Grundfos 4" motors have a ground (green wire)

GRUNDFOS Control Box SA-SPM5

RATING		GRUNDFOS MOTOR MODEL	GRUNDFOS CONTROL BOX	GRUNDFOS STANDARD #'s	GRUNDFOS RUN CAP/DELUXE #'s
HP	VOLT				
1/3	115	MS402B	SA-SPM5	91126150	–
1/3	230	MS402B	SA-SPM5	91126151	–
1/2	115	MS402B	SA-SPM5	91126152	–
1/2	230	MS402B	SA-SPM5	91126153	–
3/4	230	MS402B	SA-SPM5	91126154	–
1	230	MS402B	SA-SPM5	91126155	91126211
1.5	230	MS402B	SA-SPM5	91126212	91126213
2	230	MS4000	SA-SPM5	91126214	91126215
3	230	MS4000	SA-SPM5	91126216	91126217
5	230	MS4000	SA-SPM5	91126218	91126219

MOTOR INFORMATION

The key to long submersible motor life is good cooling. Most submersible pumps rely on moving heat away from the motor by forced convection. The ambient/produced fluid is typically drawn by the motor in the course of pumping to accomplish this task. Submersible motors used in the water supply industry are typically designed to operate at full load in water up to 30°C (86°F), provided the flow velocity can be maintained at a minimum of 0.5 feet per second (fps).

Required Cooling Flow and Velocity

AWWA specifications state the maximum motor diameter and the minimum inside diameter of the well shall be in such relationship that under any operating condition the water velocity past the motor shall not exceed 12 fps (3.7 m/s) nor be less than 0.5 fps (0.15 m/s). The AWWA specification are principally applicable to motors 6-inch and larger, as most 4-inch motor designs are based on a minimum cooling flow velocity of 0.25 fps (0.08 m/s) at rated ambient temperature. Table 8 relates flow, casing and motor size requirements to accomplish minimum cooling velocity.

Table 8: Minimum Submersible Cooling Flow Requirements

Casing/Sleeve I.D. (inches)	4" Motor (0.25 fps)	6" Motor (0.5 fps)
	(gpm)	
4	1.2	–
5	7.0	–
6	13	9
7	20	25
8	30	45
10	50	90
12	80	140
14	110	200
16	150	280
18	–	380

Notes:
1. Minor irregularities associated with motor shape and diameter variations between manufactures are not accounted for in the table.
2. At the velocity specified in the table the temperature differential between the motor surface and ambient water will range from 5° - 15°C (10-30°F).

Some submersible motor manufactures require no cooling fluid flow past the motor, when the produced fluid temperature is 20°C (68°F) or less. Cooling by free convection in such cases, is only permitted in the vertical position and is contingent on no adverse operating conditions present such as; poor power, high stop/start frequency, presence of incrustating deposits on the motor surface, etc. Detramental operating conditions are difficult to identify or predict, and for this reason, the minimum cooling flow should be provided whenever possible - regardless of the ambient fluid temperature.

MOTOR INFORMATION

Typical Motor Jacket/Shroud Configurations.

The motor shroud is generally of the next nominal diameter of standard pipe larger than the motor or the pump, depending on the shroud configuration used. The tubular/pipe material can be plastic or thin walled steel (corrosion resistant materials preferred). The cap/top must accommodate power cable without damage and provide a snug fit, so that only a very small amount of fluid can be pulled through the top of the shroud. The fit should not be completely water tight as ventilation is often required to allow escape of the air or gas that might accumulate. The shroud body should be stabilized to prevent rotation and maintain the motor centered within the shroud. The shroud length should extend to a length of 1-2 times the shroud diameter beyond the bottom of the motor when possible. Shrouds are typically attached immediately above the pump intake or at the pump/column correction.

A typical motor sleeve/shroud selection example is sited below and illustrated in Figure 8:

If a well feeds water from above the pump, has a casing/chamber too small to allow a motor jacket/sleeve on the pump, and does not have adequate level and flow to allow raising the pump above the inflow, it is difficult to properly cool the motor. When possible, the casing depth should be increased to allow flow to come from below the motor. If this is not practical, adequate flow past the motor can usually be attained by employing a motor jacket with a stringer pipe or by using a jet tube.

Figure 8: Typical Motor Jacket Installation Scenarios

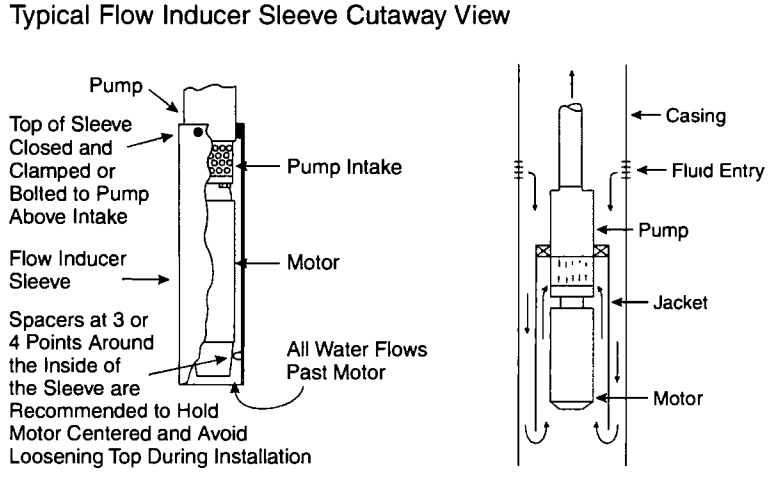

MOTOR INFORMATION

Single-Phase 60 Hz

MOTOR RATING		COPPER WIRE SIZE (AWG)								
VOLTS	HP	14	12	10	8	6	4	2	0	00
115	1/3	130	210	340	540	840	1300	1960	2910	
	1/2	100	160	250	390	620	960	1460	2160	
230	1/3	550	880	1390	2190	3400	5250	7960		
	1/2	400	650	1020	1610	2510	3880	5880		
	3/4	300	480	760	1200	1870	2890	4370	6470	
	1	250	400	630	990	1540	2380	3610	5360	6520
	1-1/2	190	310	480	770	1200	1870	2850	4280	5240
	2	150	250	390	620	970	1530	2360	3620	4480
	3	120	190	300	470	750	1190	1850	2890	3610
	5	180	280	450	710	1110	1740	2170		

Three-Phase 60 Hz

MOTOR RATIN		COPPER WIRE SIZE (AWG)						
VOLTS	HP	14	12	10	8	6	4	2
208	1-1/2	310	500	790	1260			
	2	240	390	610	970	1520		
	3	180	290	470	740	1160	1810	
		5170	280	4690	1080			1660
230	1-1/2	360	580	920	1450			
	2	280	450	700	1110	1740		
	3	210	340	540	860	1340	2080	
	5		200	320	510	800	1240	1900
460	1-1/2	1700						
	2	1300	2070					
	3	1000	1600	2520				
	5	590	950	1500	2360			
575	1-1/2	2620						
	2	2030						
	3	1580	2530					
	5	920	1480	2330				

FOOTNOTES:

1 If aluminum conductor is used, multiply lengths by 0.5 Maximum allowable length of aluminum is considerably shorter than copper wire of same size.

2. The portion of the total cable which is between the service entrance and a 3Ø motor starter should not exceed 25% of the total maximum length to ensure reliable starter operation. Single-phase control boxes may be connected at any point of the total cable length.

3 Cables #14 to #0000 are AWG sizes, and 250 to 300 are MCM sizes

TROUBLESHOOTING

SUPPLY VOLTAGE

How to Measure

By means of a voltmeter, which has been set to the proper scale, measure the voltage at the control box or starter On single-phase units, measure between line and neutral

What it Means

When the motor is under load, the voltage should be within ± 10% of the nameplate voltage Larger voltage variation may cause winding damage. Large variations in the voltage indicate a poor electrical supply and the pump should not be operated until these variations have been corrected

If the voltage constantly remains high or low, the motor should be changed to the correct supply voltage

CURRENT MEASUREMENT

How to Measure

By use of an ammeter, set on the proper scale, measure the current on each power lead at the control box See page 6, for motor amp draw information

Current should be measured when the pump is operating at a constant discharge pressure with the motor fully loaded

What it Means

If the amp draw exceeds the listed service factor amps (SFA), check for the following

1 Loose terminals in control box or possible cable defect Check winding and insulation resistances

2 Too high or low supply voltage

3 Motor windings are shorted

4 Pump is damaged causing a motor overload.

WINDING RESISTANCE

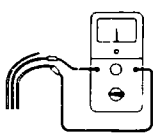

How to Measure

Turn off power and disconnect the drop cable leads in the control box Using an ohmmeter, set the scale selectors to Rx1 for values under 10 ohms and Rx10 for values over 10 ohms

Zero-adjust the meter and measure the resistance between leads Record the values Motor resistance values can be found on page 6

What it Means

If all the ohm values are normal, and the cable colors correct, the windings are not damaged If any one ohm value is less than normal, the motor may be shorted If any one ohm value is greater than normal, there is a poor cable connection or joint The windings or cable may also be open.

If some of the ohm values are greater than normal and some less, the drop cable leads are mixed To verify lead colors, see resistance values on page 6.

INSULATION RESISTANCE

How to Measure

Turn off power and disconnect the drop cable leads in the control box. Using an ohm or mega ohmmeter, set the scale selector to Rx 100K and zero-adjust the meter Measure the resistance between the lead and ground (discharge pipe or well casing, if steel)

What it Means

For ohm values, refer to table below. Motors of all Hp, voltage, phase and cycle duties have the same value of insulation resistance

OHM VALUE	MEGAOHM VALUE	CONDITION OF MOTOR AND LEADS
		Motor not yet installed:
2,000,000 (or more)	2 0	New Motor
1,000,000 (or more)	1.0	Used motor which can be reinstalled in the well
		Motor in well (Ohm readings are for drop cable plus motor)
500,000 - 1,000,000	0.5 - 1.0	A motor in reasonably good condition.
20,000 - 500,000	0.02 - 0.5	A motor which may have been damaged by lightning or with damaged leads. Do not pull the pump for this reason
10,000 - 20,000	0 01 - 0.02	A motor which definitely has been damaged or with damaged cable The pump should be pulled and repairs made to the cable or the motor replaced The motor will still operate, but probably not for long
less than 10,000	0 - 0.01	A motor which has failed or with completely destroyed cable insulation. The pump must be pulled and the cable repaired or the motor replaced The motor will not run in this condition.

TROUBLESHOOTING

Pump Won't Start

POSSIBLE CAUSE	CHECK THIS BY...	CORRECT THIS BY...
No power at the motor	Check for voltage at the control box or panel.	If there is no voltage at the control panel, check the feeder panel for tripped circuits and reset those circuits.
Fuses are blown or the circuit breakers have tripped	Turn off the power and remove the fuses. Check for continuity with an ohmmeter.	Replace the blown fuses or reset the circuit breaker If the new fuses blow or the circuit breaker trips, the electrical installation, motor, and wires must be check for defects.
(3-phase motors only) **Motor starter overloads are burned or have tripped**	Check for voltage on the line and load side of the starter Check the amp draw and make sure the heater is sized correctly.	Replace any burned heaters or reset Inspect the starter for other damage. If the heater trips again, check the supply voltage. Ensure that heaters are sized correctly and the trip setting is appropriately adjusted.
(3-phase motors only) **Starter does not energize**	Energize the control circuit and check for voltage at the holding coil.	If there is no voltage, check the control circuit fuses. If there is voltage, check the holding coil for weak connections Ensure that the holding coil is designed to operate with the available control voltage. Replace the coil if defects are found
Defective controls	Check all safety and pressure switches for defects. Inspect the contacts in control devices.	Replace worn or defective parts or controls.
Motor or cable is defective	Turn off the power and disconnect the motor leads from the control box. Measure the lead-to-lead resistance with an ohmmeter (set to R x 1). Measure the lead-to-ground values with an ohmmeter (set to R x 100K).	If an open or grounded winding is found, remove the motor from the well and recheck the measurements with the lead separated from the motor. Repair or replace the motor or cable.
(1-phase motors only) **Defective capacitor**	Turn off the power and discharge the capacitor by shorting the leads together. Check it with an analog ohmmeter (set to R x 100k).	When the meter is connected to the capacitor, the needle should jump toward 0 (zero) ohms and slowly drift back to infinity (∞). Replace capacitor if it is defective.
Defective pressure switch or the tubing to it is plugged	Watch the pressure gauges as the pressure switch operates. Remove the tubing and blow through it.	Replace as necessary.
The pump is mechanically bound or stuck	Turn off the power and manually rotate the pump shaft. Also check the motor shaft rotation, the shaft height, and the motor's amp draw (to see if it indicates a locked rotor).	If the pump shaft doesn't rotate, remove the pump and examine it. If necessary, dismantle it and check the impellers and seal for obstruction. Check for motor corrosion.

Pump Does Not Produce Enough Flow (GPM)

POSSIBLE CAUSE	CHECK THIS BY...	CORRECT THIS BY...
(3-phase motors only) **Shaft is turning in the wrong direction**	Check to make sure the electrical connections in the control panel are correct.	Correct the wiring For single phase motors, check the wiring diagram on the motor. For three phase motors, simply switch any two power leads
Pump is operating at the wrong speed (too slow)	Check for low voltage and phase imbalance.	Replace defective parts or contact power company, as applicable
Check valve is stuck (or installed backwards)	Remove the check valve.	Re-install or replace
Parts or fittings in the pump are worn **– or –** **Impellers or Inlet Strainer is clogged**	Install a pressure gauge near the discharge port, start the pump, and gradually close the discharge valve Read the pressure at shutoff (Do not allow the pump to operate for an extended period at shutoff.)	Convert the PSI you read on the gauge to Feet of Head by: **PSI x 2.31 ft/PSI = _____ ft.** **Specific Gravity** Add to this number the number of feet (vertically) from the gauge down to the water's pumping level Refer to the pump curve for the model you are working with to determine the shutoff head you should expect for that model If that head is close to the figure you came up with (above), the pump is probably OK. If not, remove the pump and inspect impellers, chambers, etc.
The water level in the well may be too low to supply the flow desired **– or –** **Collapsed well**	Check the drawdown in the well while the pump is operating.	If the pumping water level (including drawdown) is not **AT LEAST 3 FEET** above the pump's inlet strainer, either: 1. Lower the pump further down the well. 2. Throttle back the discharge valve to decrease the flow, thereby reuding drawdown.
Broken shaft or coupling	Pull pump and inspect	Replace as necessary.
There are leaks in the fittings or piping	Pull the pump out of the well.	The suction pipe, valves, and fittings must be made tight Repair any leaks and retighten all loose fittings

TROUBLESHOOTING

Fuses Blow or Heaters Trip

POSSIBLE CAUSE	CHECK THIS BY...	CORRECT THIS BY ..
Improper voltage	Check the voltage at the control box or panel	If the voltage varies by more than 10% (+ or -), contact the power company
	If the incoming voltage is OK, check the wire size and the distance between the pump motor and the pump control panel.	Rewire with correct gauge Undersized wire and a great distance between the control panel and the pump motor increases resistance and decreases the voltage by the time it reaches the pump motor
The starter overloads are set too low	Cycle the pump and measure the amperage	Increase the heater size or adjust the trip setting Do not, however, exceed the recommended rating.
(3-phase motors only) **The three-phase current is imbalanced**	Check the current draw on each lead to the motor	The current draw on each lead must be within 5% of each other (+ or -). If they are not, check the wiring.
The wiring or connections are faulty	Check to make sure the wiring is correct and there are no loose terminals.	Tighten any loose terminals and replace any damaged wire
(1-phase motors only) **Capacitor is defective**	Turn off the power and discharge the capacitor Check the capacitor with an ohmmeter (set at R x 100k). See page 15 for instructions	When the meter is connected to the capacitor, the needle should jump toward 0 (zero) ohms and then slowly drift back to infinity (¥). Replace capacitor if it is defective
Fuse, heater, or starter are the wrong size	Check the fuses and heaters against the motor manufacturer's specification charts.	Replace as necessary.
The control box location is too hot	Touch the box with your bare hand during the hottest part of the day – you should be able to keep your hand on it without burning.	Shade, ventilate, or move the control box so its environment does not exceed 120°F
(1-phase motors only) **Wrong control box**	Check requirements for the motor against the control box specifications	Replace as necessary
Defective pressure switch	Watch gauges as pressure switch operates.	Replace as necessary
The motor is shorted or grounded.	Turn off the power and disconnect the wiring. Measure the lead-to-lead resistance with an ohmmeter (set to R x 1) Measure the lead-to-ground values with an ohmmeter (set to R x 100K) or a megaohmmeter Compare these measurements to the rated values for your motor	If you find an open or grounded winding, remove the motor and recheck the leads If OK, check the leads for continuity and for bad splice
Poor motor cooling	Find the internal diameter of the well casing (or sleeve, if used). For proper cooling, the flow of water **must not be less than the GPM shown across the bottom scale on page __.**	Throttle up the pump flow (GPM) so proper cooling is possible – or – Pull the pump out of the well and add a sleeve with a smaller internal diameter

Pump Cycles Too Often

POSSIBLE CAUSE	CHECK THIS BY...	CORRECT THIS BY...
The pressure switch is defective or is not properly adjusted	Check the pressure setting on the switch. Check the voltage across closed contacts.	Readjust the pressure switch or replace it if defective
The tank is too small	Check the tank size and amount of air in the tank The tank volume should be approximately 10 gallons for each Gallon-Per-Minute of pump capacity. At the pump cut-in pressure, the tank should be about 2/3 filled with air	Replace the tank with one that is the correct size
There is insufficient air charging of the tank or piping is leaking	Pump air into the tank or diaphragm chamber Check the diaphragm for leaks. Check the tank and piping for leaks with soapy water Check the air-to-water ratio in the tank.	Repair as necessary
Plugged snifter valve or bleed orifice (causing pressure tank to be waterlogged)	Examine them for dirt or erosion.	Repair or replace as necessary.
Leak in the pressure tank or piping	Apply soapy water to pipes and tank, then watch for bubbles, indicating leaks.	Repair or replace as necessary
The level control is defective or is not properly set	Check the setting and operation of the level control.	Readjust the level control setting (according to the manufacturer's instructions) or replace it if defective.
Pump is oversized for the application. It is outpumping the yield of the well and pumping itself dry.	Check the yield of the well (determined by the well-test) against the pump's performance curve	Reduce the flow by throttling back the valve – or – Change the pump.

LIMITED WARRANTY

Products manufactured by GRUNDFOS are warranted to the original user only to be free of defects in material and workmanship for a period of 24 months from date of installation, but not more than 30 months from date of manufacture. GRUNDFOS' liability under this warranty shall be limited to repairing or replacing at GRUNDFOS' option, without charge, F.O.B. GRUNDFOS' factory or authorized service station, any product of GRUNDFOS' manufacture. GRUNDFOS will not be liable for any costs of removal, installation, transportation, or any other charges which may arise in connection with a warranty claim Products which are sold but not manufactured by GRUNDFOS are subject to the warranty provided by the manufacturer of said products and not by GRUNDFOS' warranty. GRUNDFOS will not be liable for damage or wear to products caused by abnormal operating conditions, accident, abuse, misuse, unauthorized alteration or repair, or if the product was not installed in accordance with GRUNDFOS printed installation and operating instructions.

To obtain service under this warranty, the defective product must be returned to the distributor or dealer of GRUNDFOS products from which it was purchased together with proof of purchase and installation date, failure date, and supporting installation data. Unless otherwise provided, the distributor or dealer will contact GRUNDFOS or an authorized service station for instructions. Any defective product to be returned to GRUNDFOS or a service station must be sent freight prepaid; documentation supporting the warranty claim and/or a Return Material Authorization must be included if so instructed.

MANUFACTURER WILL NOT BE LIABLE FOR ANY INCIDENTAL OR CONSEQUENTIAL DAMAGES, LOSSES, OR EXPENSES ARISING FROM INSTALLATION, USE, OR ANY OTHER CAUSES. THERE ARE NO EXPRESS OR IMPLIED WARRANTIES, INCLUDING MERCHANTABILITY OR FITNESS FOR A PARTICULAR PURPOSE, WHICH EXTEND BEYOND THOSE WARRANTIES DESCRIBED OR REFERRED TO ABOVE. EXCEPT AS EXPRESSLY HEREIN PROVIDED THE GOODS ARE SOLD "AS IS", THE ENTIRE RISK AS TO QUALITY AND FITNESS FOR A PARTICULAR PURPOSE, AND PERFORMANCE OF THE GOODS IS WITH THE BUYER, AND SHOULD THE GOODS PROVE DEFECTIVE FOLLOWING THEIR PURCHASE, THE BUYER AND NOT THE MANUFACTURER, DISTRIBUTOR, OR RETAILER ASSUMES THE ENTIRE RISK OF ALL NECESSARY SERVICING OR REPAIR.

Some jurisdictions do not allow the exclusion or limitation of implied warranties of merchantability and fitness for a particular purpose, of incidental or consequential damages and some jurisdictions do not allow limitations on how long implied warranties may last or require you to pay certain expenses as set forth above. Therefore, the above limitations or exclusions may not apply to you. This warranty gives you specific legal rights and you may also have other rights which vary from jurisdiction to jurisdiction.

BE > THINK > INNOVATE >

Being responsible is our foundation
Thinking ahead makes it possible
Innovation is the essence

U.S.A.
Grundfos Pumps Corporation
17100 W. 118th Terrace
Olathe, KS 66061
Telephone (913) 227-3400
Fax: (913) 227-3500

Canada
Grundfos Canada, Inc.
2941 Brighton Road
Oakville, Ontario L6H 6C9, Canada
Telephone: (905) 829-9533
Fax. (905) 829-9512

Mexico
Bombas Grundfos de Mexico, S.A. de C.V
Boulevard TLC No 15
Parque Industrial Stiva Aeropuerto
Apodaca, N.L Mexico
C.P. 66600 Apodaca, N L Mexico
Telephone: 011-52-81-8144-4000
Fax: 011-52-81-8144-4010

L-SP-TL-048 Rev. 5/08(US)

www.grundfos.com

GRUNDFOS

Part 1 – INTRODUCTION

Part 2 – CABLE SELECTION

Part 3 – MISC. TECHNICAL DATA, FORMULAS, AND CONVERSIONS

PART 1: INTRODUCTION

General

This section will provide the technical information needed to properly select GRUNDFOS groundwater products. The information applies primarily to domestic groundwater systems using 4-inch wells with submersible or jet pumps, pressure tanks, and accessories. It is important to be familiar with typical system components and their basic hydraulic principles to ensure a better understanding of the more technical information found later in this section.

Prior to selecting the pump, the basic system requirements must be determined. System capacity and system pressure must be calculated and friction losses determined to ensure proper system performance. These calculations are covered in detail in **Part 1.** In **Part 2**, information is provided on proper cable selection. Also provided in **Part 3** are miscellaneous technical data and formulas commonly used in the selection of domestic groundwater systems.

Typical System Components

Domestic groundwater systems are made up of a pump, storage tank, and accessories to operate the system automatically. Pumps are generally of the submersible or jet variety and include the pump and motor as a unit. Refer to Figure 8-A for the components found in a typical automatic groundwater pumping system.

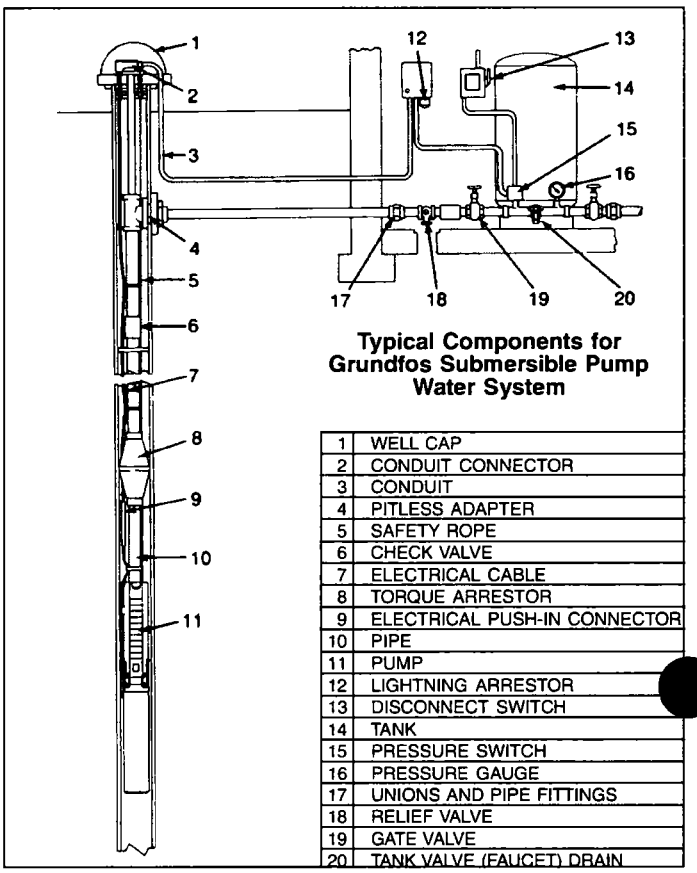

Typical Components for Grundfos Submersible Pump Water System

1	WELL CAP
2	CONDUIT CONNECTOR
3	CONDUIT
4	PITLESS ADAPTER
5	SAFETY ROPE
6	CHECK VALVE
7	ELECTRICAL CABLE
8	TORQUE ARRESTOR
9	ELECTRICAL PUSH-IN CONNECTOR
10	PIPE
11	PUMP
12	LIGHTNING ARRESTOR
13	DISCONNECT SWITCH
14	TANK
15	PRESSURE SWITCH
16	PRESSURE GAUGE
17	UNIONS AND PIPE FITTINGS
18	RELIEF VALVE
19	GATE VALVE
20	TANK VALVE (FAUCET) DRAIN

FIGURE 8-A
Components found in a typical automatic groundwater pumping system including a submersible pump, pressure tank, and pressure control accessories.

In a ***closed, automatic water system*** a pressure tank is used to store water and maintain system pressure between specified limits (such as 30 to 50 psi). As the water level in the tank rises, tank air is compressed in the upper part of the tank until the upper pressure limit is reached (i.e., 50 psi). At this "cut-out" point a pressure switch opens the electrical circuit to the motor and the pump stops.

The compressed air in the tank acts like a spring pushing down on the water to create system pressure. When a valve is opened in the water system, the air pressure in the upper part of the tank forces the water to flow out of the tank and into the system. As the water is drawn from the tank, the air occupies a larger space and the pressure drops until the lower limit is reached (i.e., 30 psi). At this "cut-in" point the pressure switch closes the electrical circuit to the motor and the pump starts. A cycle is thereby completed.

In an ***open, automatic water system*** the pump is used to fill a large, elevated storage tank which utilizes gravity to maintain system pressure. Tank level controls are used to cycle the pump to maintain water levels within prescribed limits.

Refer to the following illustrations for schematic layouts of typical domestic groundwater systems and components: Figure 8-B (Submersible Pump - Closed System), Figure 8-C (Submersible Pump - Open System), Figure 8-D (Shallow Well Jet Pump), and Figure 8-E (Deep Well Jet Pump).

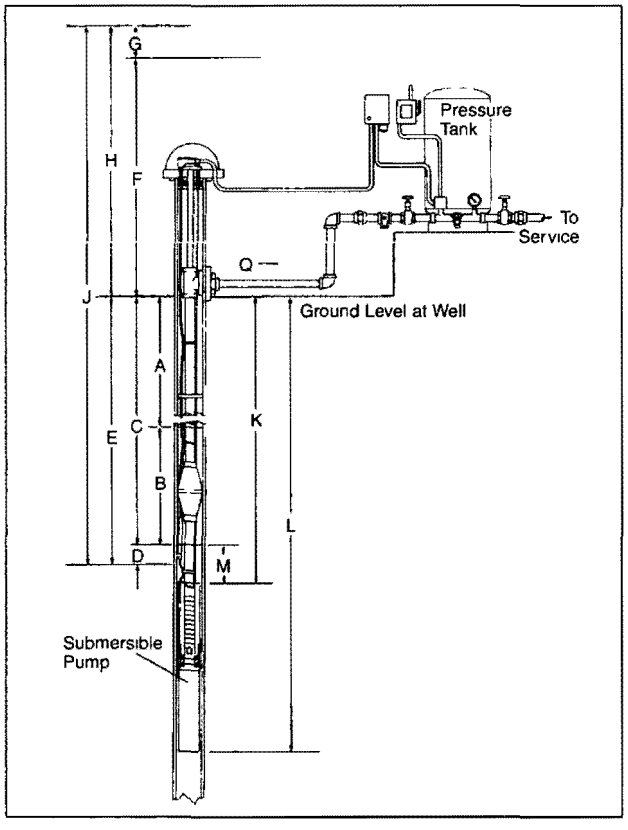

FIGURE 8-B
Figure 8-B illustrates a schematic layout of a CLOSED goundwater pumping system using a submersible pump and pressure tank set for automatic operation. A pressure switch controls the cycling of the pump.

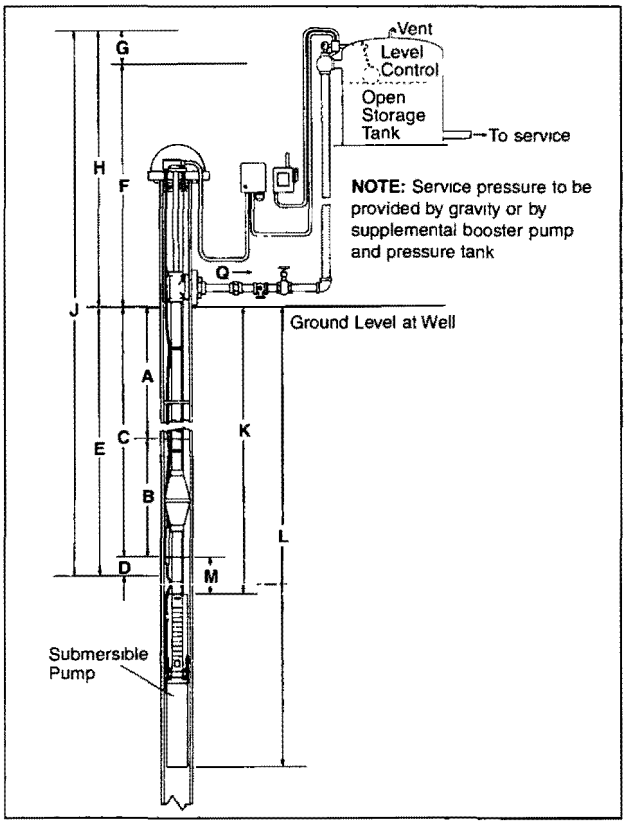

FIGURE 8-C
Figure 8-C illustrates a schematic layout of an OPEN groundwater pumping system using a submersible pump and an elevated storage tank set for automatic operation. A level control on the storage tank controls the cycling of the pump.

Closed Groundwater System with Submersible Pump

A. **STATIC WATER LEVEL (in feet):** vertical distance from the top of the well to the standing water level or water table.

B. **DRAWDOWN (in feet):** reduction in the water level during pumping (varies with well yield and pump capacity).

C. **PUMPING WATER LEVEL or LIFT (in feet):** C = A + B.

D. **FRICTION LOSSES in the WELL (in feet):** friction losses caused by the drop pipe and fittings between the pump and the top of the well.

E. **TOTAL LIFT in the WELL (in feet):** E = A + B + D.

F. **STATIC DISCHARGE HEAD (in feet):** for PRESSURE TANK SYSTEMS it is the elevation rise in feet of the pressure tank, discharge nozzles, etc., above the top of the well plus the pressure (in feet) required at that level.

G. **FRICTION LOSSES in the DISCHARGE SYSTEM (in feet):** friction losses caused by piping, valves, and fittings between the top of the well and the point of discharge.

H. **TOTAL DISCHARGE HEAD (in feet):** H = F + G.

J. **TOTAL PUMPING HEAD (in feet):** J = E + H.

K. **SETTING OF PUMP (in feet):** vertical distance from the top of the well to the top of the pump.

L. **OVERALL LENGTH (in feet):** vertical distance from the top of the well to the bottom of the pump.

M. **SUBMERGENCE (in feet):** M = K - C.

Q. **CAPACITY (in gpm or gph):** rate of pumping

Open Groundwater System with Submersible Pump

A. **STATIC WATER LEVEL (in feet):** vertical distance from the top of the well to the standing water level or water table.

B. **DRAWDOWN (in feet):** reduction in the water level during pumping (varies with well yield and pump capacity).

C. **PUMPING WATER LEVEL or LIFT (in feet):** C = A + B.

D. **FRICTION LOSSES in the WELL (in feet):** friction losses caused by the drop pipe and fittings between the pump and the top of the well.

E. **TOTAL LIFT in the WELL (in feet):** E = A + B + D.

F. **STATIC DISCHARGE HEAD (in feet):** for OPEN DISCHARGE SYSTEMS it is the elevation of the highest water level above the top of the well

G. **FRICTION LOSSES in the DISCHARGE SYSTEM (in feet):** friction losses caused by piping, valves, and fittings between the top of the well and the point of discharge.

H. **TOTAL DISCHARGE HEAD (in feet):** H = F + G.

J. **TOTAL PUMPING HEAD (in feet):** J = E + H.

K. **SETTING OF PUMP (in feet):** vertical distance from the top of the well to the top of the pump.

L. **OVERALL LENGTH (in feet):** vertical distance from the top of the well to the bottom of the pump.

M. **SUBMERGENCE (in feet):** M = K - C.

Q. **CAPACITY (in gpm or gph):** rate of pumping.

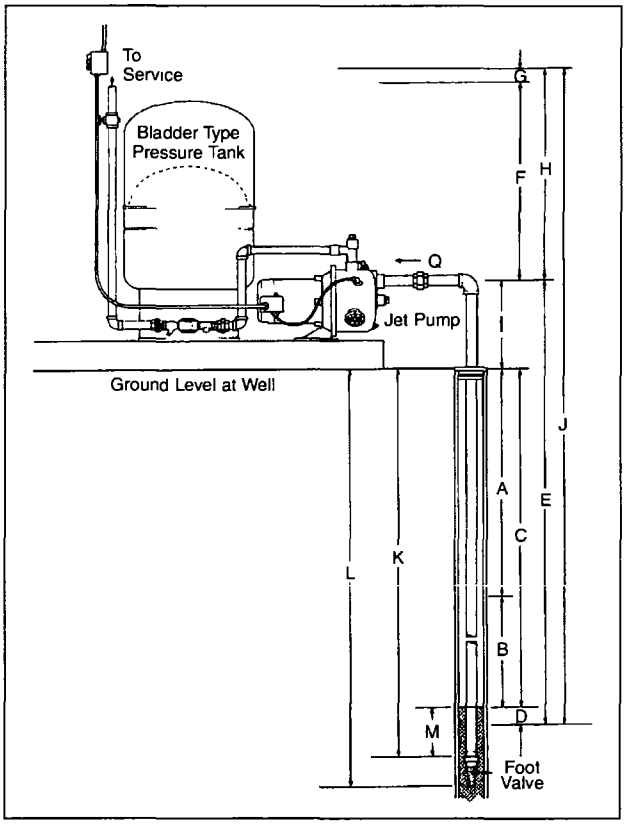

FIGURE 8-D
Figure 8-D illustrates a schematic layout of a SHALLOW WELL groundwater pumping system using a shallow well JET PUMP designed for setting to 25 feet. The pressure tank is set for automatic operation with a pressure switch controlling the cycling of the pump.

CLOSED GROUNDWATER SYSTEM WITH SHALLOW WELL JET PUMP

A. Statics Water Level (in feet): vertical distance from the top of the well to the standing water level or water table.

B. Drawdown (in feet): reduction in the water level during pumping (varies with well yield and pump capacity).

C. Pumping Water Level or Lift (in feet): C = A + B.

D. Friction Losses in the Suction System (in feet): friction losses caused by suction piping between the pump and foot valve.

E. Total Suction Lift (in feet): E = A + B + D + I.

F. Static Discharge Head (in feet): for *Pressure Tanks Systems* it is the elevation rise in feet of the pressure tank, discharge nozzles, etc , above the pump plus the pressure (in feet) discharge nozzles, etc., above the pump plus the pressure (in feet) required at that level. For *Open Discharge Systems* it is the elevation in feet of the highest water level above the pump.

G. Friction Losses in the Discharge System (in feet): friction losses caused by piping, valves, and fittings between the top of the well and the point of discharge.

H. Total Discharge Head (in feet): H = F + G.

I. Elevation of the Pump above the Top of the Well (in feet).

J. Total Pumping Head (in feet): J = E + H.

K. Setting of the Foot Valve or Strainer (in feet): vertical distance from the top of the well to the top of the foot valve or strainer.

L. Overall Length (in feet): vertical distance from the top of the well to the bottom of the foot valve or strainer.

M. Submergence (in feet): M = K - C.

Q. Capacity (in gpm or gph): rate of pumping.

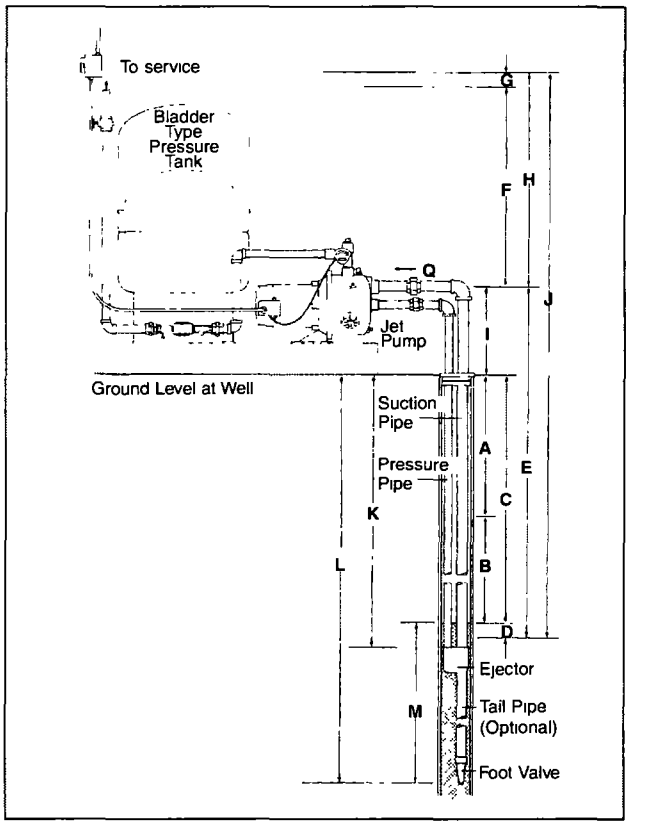

FIGURE 8-E
Figure 8-E illustrates a schematic layout of an DEEP WELL groundwater pumping system using a deep well JET PUMP designed for settings to 100 feet. The pressure tank is set for automatic operation with a pressure switch controlling the cycling of the pump.

CLOSED GROUNDWATER SYSTEM WITH SHALLOW WELL JET PUMP

A. Static Water Level (in feet): vertical distance from the top of the well to the standing water level or water table.

B. Drawdown (in feet): reduction in the water level during pumping (varies with well yield and pump capacity).

C. Pumping Water Level or Lift (in feet): C = A + B.

D. Friction Losses in the Suction System (in feet): friction losses caused by suction piping between the pump and foot valve.

E. Total Suction Lift (in feet): E = A + B + D + I.

F. Static Discharge Head (in feet): for PRESSURE TANK SYSTEMS it is the elevation rise in feet of the pressure tank, discharge nozzles, etc., above the pump plus the pressure (in feet) discharge nozzles, etc., above the pump plus the pressure (in feet) required at that level. For OPEN DISCHARGE SYSTEMS it is the elevation in feet of the highest water level above the pump.

G. Friction Losses in the Discharge System (in feet): friction losses caused by piping, valves, and fittings between the top of the well and the point of discharge.

H. Total Discharge Head (in feet): H = F + G.

I. Elevation of the Pump above the Top of the Well (in feet).

J. Total Pumping Head (in feet): J = E + H.

K. Setting of the Foot Valve or Strainer (in feet): vertical distance from the top of the well to the top of the foot valve or strainer.

L. Overall Length (in feet): vertical distance from the top of the well to the bottom of the foot valve or strainer.

M. Submergence (in feet): M=K–C. The ejector should be set as close to the bottom of its maximum depth rating as the well will permit.

Q. Capacity (in gpm or gph): rate of pumping.

Head and Pressure

Head and pressure are related in a very simple and direct manner. Since water has known weight, we know that a 231 foot long, one-inch square pipe holds 100 pounds of water At the bottom of the one-inch square pipe we refer to the pressure as 100 pounds per square inch (psi). For any diameter pipe 231 feet high, the pressure will always be 100 psi at the bottom. Refer to Figure 8-F.

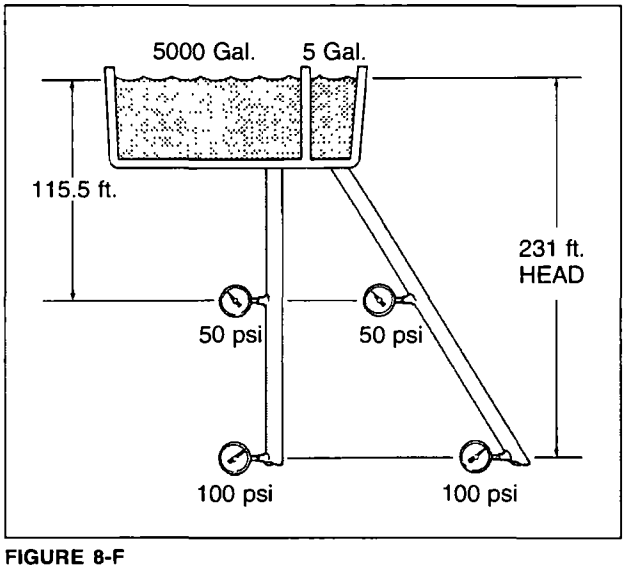

FIGURE 8-F
Figure 8-F illustrates the relationship between head and pressure

Head is usually expressed in feet and refers to the height, or elevation, of the column of water. In Figure 8-F we see that a column of water 231 feet high creates a pressure reading of 100 psi. That same column of water is referred to as having 231 feet of **head**. Thus, for water, 231 feet of head is equivalent to 100 psi. Or, 2.31 feet of head equals 1 psi.

It should be noted that head and pressure readings for non-flowing water depend on the elevation of the water and not on the volume of water nor the size or length of piping.

Flow and Friction Loss

Flow is measured as the volume of water moved over a given length of time. This is generally referred to as gallons per minute (gpm) for larger flows and gallons per hour (gph) for smaller flows. When water moves through a pipe, it must overcome resistance to flow caused by friction as it moves along the walls of the pipe as well as resistance caused by its own turbulence. Added together, these losses are referred to as **friction losses** and may significantly reduce system pressure.

Figure 8-G illustrates the relationship of flow and friction loss. For any flow through a level pipe the gauge pressure at the pipe inlet will be greater than the gauge pressure at the pipe outlet. The difference is attributed to friction losses caused by the pipe itself and by fittings.

In general, friction losses occur or are increased under the following conditions:

1. Friction losses result from flow through any size or length of pipe (Figure 8-G).
2. Friction losses increase as the flow rate increases or as the pipe size decreases (if the flow rate doubles for a given pipe size, friction losses quadruple, Figure 8-G).
3. Friction losses increase with the addition of valves and fittings to the system (Figure 8-G).

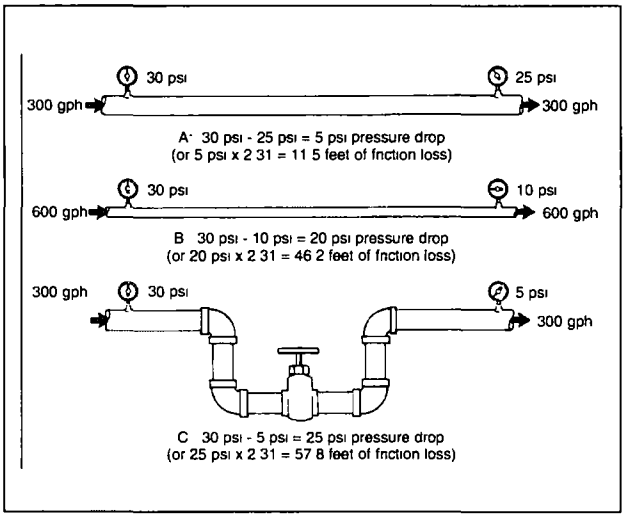

FIGURE 8-G
As shown in these illustrations friction losses increase with additional flow

Power is required to push water to a higher elevation, to increase outlet pressure, to increase flow rates, and to overcome friction losses Good system design and common sense indicate that friction losses should be minimized whenever possible. The costs of larger pumps, bigger motors, and increased power consumption to overcome friction losses must be balanced against the increased cost of larger, but more efficient, system piping. In either case, unnecessary valves and fittings should be eliminated wherever possible.

Submersible Pumps vs. Jet Pumps

Submersible and jet pumps are both used in domestic groundwater systems. When high flow rates and pressure settings are required at high operating efficiencies, submersible pumps are generally preferred. Submersible pumps have the advantage of performing well both in shallow well applications as well as at depths to 2,000 feet. An extensive range of submersible pump models is also available allowing a precise match to exact system requirements.

Convertible jet pumps are sometimes an economical alternative to submersibles, especially in shallow well installations of 25 feet or less. The pumps are less expensive, installation is simplified, and they are easily converted for deep well installations down to 100 feet (Figure 8-H).

In "weak" well applications where the pump lowers the water level in the well faster than the well can replenish itself, a deep well jet pump with a tail pipe is particularly effective when flow requirements are relatively small. By adding 35 feet of tail pipe below the jet assembly with the foot valve attached to the bottom, it will not be possible to pull the well down and allow air to enter the system. Pump delivery remains at 100% of the rated capacity down to the level of the jet assembly. If the water level falls below that point, flow decreases in proportion to the drawdown as shown in Figure 8-I. When pump delivery equals well inflow, the water level remains constant until the pump shuts off. At 33.9 feet of drawdown the pump will no longer deliver water but the foot valve will remain fully submerged.

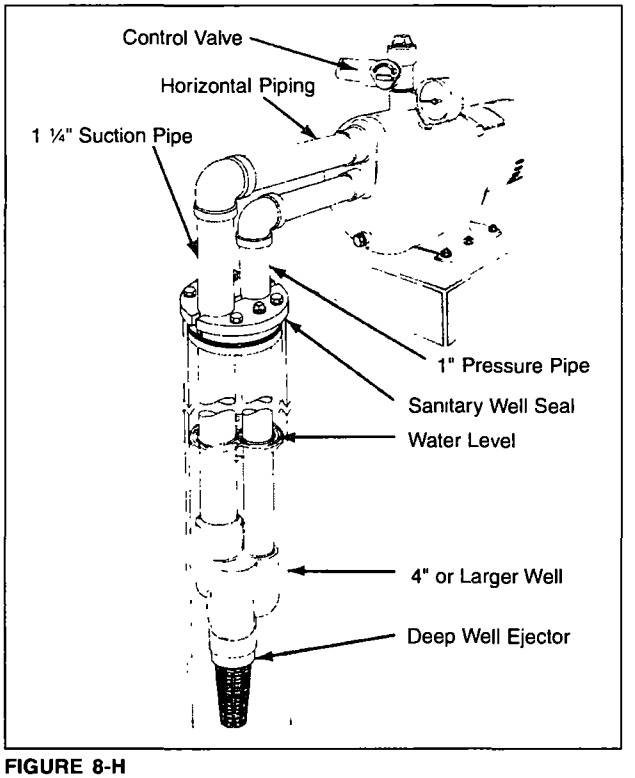

FIGURE 8-H
Figure 8-H illustrates a convertible jet pump set for deep well use (to 100 feet).

Final Pump Selection

Final pump selection will depend upon specific application requirements and cost considerations. Regardless of the pump type, system flow and head requirements (discussed in detail in Part 2) must be determined prior to actual pump selection.

Flow requirement will be determined by the size of the house or farm (including the number of bathrooms, outlets and appliances), the size of family, and the number of farm animals, if applicable.

Total Pumping Head must be calculated to ensure that the pump selected will meet all head or discharge pressure requirements. Total pumping head is the combination of the total suction lift (or lift in well), plus the pump discharge head (consisting of the elevation from the pumping water level to pressure tank plus pressure tank discharge pressure), plus all system friction losses.

Total Dynamic Head is equivalent to total pumping head plus velocity head. In most residential systems, velocity head is negligible. Because of this, the velocity head term has been left out of future examples and formulas. From the information gathered on flow and head requirements, a specific submersible or jet pump may be selected and an appropriately sized pressure tank ordered.

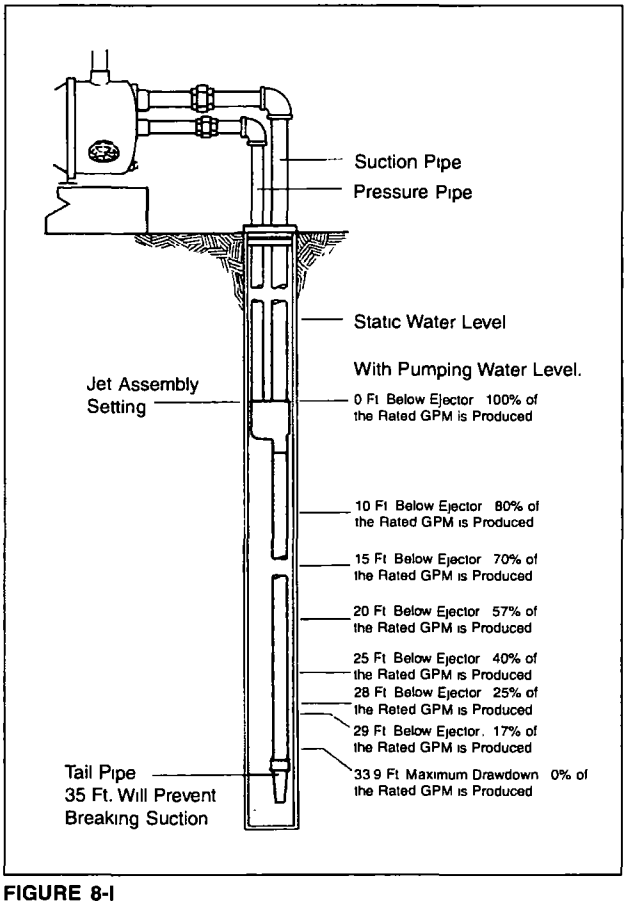

FIGURE 8-I
Figure 8-I illustrates the use of a tail pipe on a deep well convertible jet pump to compensate for weak well conditions.

PART 2: CABLE SELECTION

Submersible Pump Cable Selection Charts (60 Hz)

CABLE LENGTH SELECTION TABLES

The following table (Table 8-Q(2)) lists the recommended copper cable sizes and various cable lengths for submersible pump motors. Proper wire size will ensure that adequate voltage will be supplied to the motor.

This table complies with the 1978 edition of the National Electric Table 310-16, Column 2 for 75°C wire. The ampacities (current carrying properties of a conductor) have been divided by 1.25 per the N.E.C , Article 430-22, for motor branch circuits based on motor amps at rated horsepower.

To assure adequate starting torque, the maximum cable lengths are calculated to maintain 95% of the service entrance voltage at the motor when the motor is running at maximum nameplate amps. Cable sizes larger than specified may always be used and will reduce power usage

The use of cables smaller than the recommended sizes will void the warranty. Smaller cable sizes will cause reduced starting torque and poor motor operation.

CALCULATING MIXED CABLE SIZES

In a submersible pump installation any combination of cable sizes may be used as long as the total percentage length of the individual cables does not exceed 100%. Mixed cable sizes are most often encountered when a pump is being replaced with a larger horsepower model and part of the old cable will be left in place

In the following example, a 2 HP, 230 volt, 1 phase pump is being installed to replace a smaller model. The 115 feet of buried #12 cable located between the service entrance and the well head will be used in the replacement installation. The well driller must be able to calculate the required size of cable in the well to connect the new motor at a setting of 270 feet.

Cable Size Calculation:
Step 1–Check Table 8-Q(2) to see if the 115 feet of existing #12 cable is large enough to provide current to the larger 2 HP replacement pump. The table tells us that #12 cable is adequate for a maximum length of 250 feet.

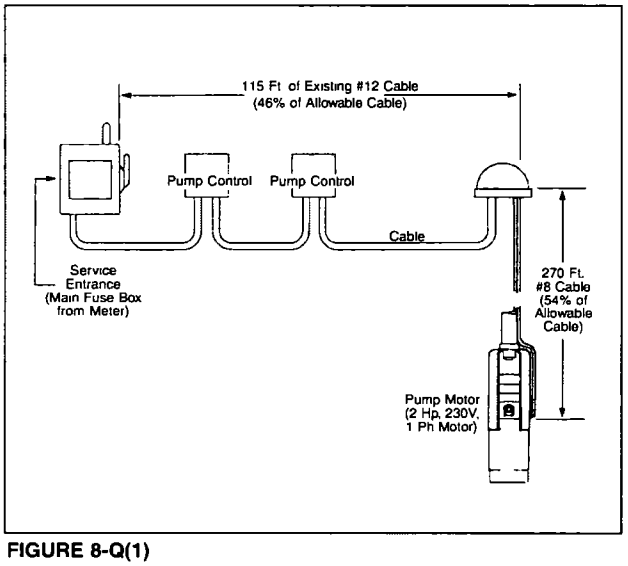

FIGURE 8-Q(1)
Example of Mixed Cable Installation

Step 2–Since 250 feet is the maximum allowable cable length for the #12 cable, calculate the percent used by the 115-foot run (115 ft. ÷ 250 ft. = 46%)

Step 3–With 46% of the total allowable cable used between the service entrance and the well head, 54% remains for use in the well (100% - 46% = 54%) Therefore, the 270 feet of cable required in the well can utilize only 54% of the total feet allowed in the table.

Step 4–From Table 8-Q(2) determine the proper size cable required for the 2 HP pump set at 270 feet. (Remember, you are limited to 54% of the length listed in the table.) A check of #10 cable at 2 HP indicates that only 210 feet of this cable could be used (390 ft. x 54% = 210 ft.). Since this is less than the 270 required, the next larger size should be tried. For #8 cable, 54% of 620 feet = 335 feet. ***The #8 cable is suitable for use in the well at a pump setting of 270 feet.***

See Chart 8-Q(2) next page.

MAXIMUM MOTOR CABLE LENGTH

(Motor Service to Entrance)

TABLE 8-Q(2)
Single Phase 60Hz

Motor Rating		Copper Wire Size												
Volts	**HP**	**14**	**12**	**10**	**8**	**6**	**4**	**2**	**0**	**00**	**000**	**0000**	**250**	**300**
115	1/3	130	210	340	540	840	1300	1960	2910					
	1/2	100	160	250	390	620	960	1460	2160					
230	1/3	550	880	1390	2190	3400	5250	7960						
	1/2	400	650	1020	1610	2510	3880	5880						
	3/4	300	480	760	1200	1870	2890	4370	6470					
	1	250	400	630	990	1540	2380	3610	5360	6520				
	1½	190	310	480	770	1200	1870	2850	4280	5240				
	2	150	250	390	620	970	1530	2360	3620	4480				
	3	120	190	300	470	750	1190	1850	2890	3610				
	5			180	280	450	710	1110	1740	2170				
	7½				200	310	490	750	1140	1410				
	10					250	390	600	930	1160				

Three Phase 60Hz

Volts	HP	14	12	10	8	6	4	2	0	00	000	0000	250	300
208	1½	310	500	790	1260									
	2	240	390	610	970	1520								
	3	180	290	470	740	1160	1810							
	5		170	280	440	690	1080	1660						
	7½			200	310	490	770	1180	1770					
	10				230	370	570	880	1330	1640				
	15					250	390	600	910	1110	1340			
	20						300	460	700	860	1050	1270		
	25							370	570	700	840	1030	1170	
	30							310	470	580	700	850	970	1110
230	1½	360	580	920	1450									
	2	280	450	700	1110	1740								
	3	210	340	540	860	1340	2080							
	5		200	320	510	800	1240	1900						
	7½			230	360	570	890	1350	2030					
	10				270	420	660	1010	1520	1870				
	15					290	450	690	1040	1280	1540			
	20						350	530	810	990	1200	1450		
	25						280	430	650	800	970	1170	1340	
	30							350	540	660	800	970	1110	127
460	1½	1700												
	2	1300	2070											
	3	1000	1600	2520										
	5	590	950	1500	2360									
	7½	420	680	1070	1690	2640								
	10	310	500	790	1250	1960	3050							
	15			540	850	1340	2090	3200						
	20			410	650	1030	1610	2470	3730					
	25				530	830	1300	1990	3010	3700				
	30				430	680	1070	1640	2490	3060	3700			
	40						790	1210	1830	2250	2710	3290		
	50						640	980	1480	1810	2190	2650	3010	
	60							830	1250	1540	1850	2240	2540	2890
	75								1030	1260	1520	1850	2100	2400
	100									940	1130	1380	1560	1790
	125											1080	1220	1390
	150												1050	1190
	200												1080	1300
	250													1080
575	1½	2620												
	2	2030												
	3	1580	2530											
	5	920	1480	2330										
	7½	660	1060	1680	2650									
	10	490	780	1240	1950									
	15		530	850	1340	2090								
	20			650	1030	1610	2520							
	25			520	830	1300	2030	3110						
	30				680	1070	1670	2560	3880					
	40					790	1240	1900	2860	3510				
	50						1000	1540	2310	2840	3420			
	60						850	1300	1960	2400	2890	3500		
	75							1060	1600	1970	2380	2890	3290	

CAUTION: Use of wire size smaller than listed will void warranty.

Notes: 1. If aluminum conductor is used, multiply lengths by 0.5 Maximum allowable length of aluminum is considerably shorter than copper wir same size

2. The portion of the total cable which is between the service entrance and a 3ø motor starter should not exceed 25% of the total maximum length to assure reliable starter operation. Single-phase control boxes may be connected at any point of the total cable length.
3. Cables #14 to #0000 are AWG sizes, and 250 to 300 are MCM sizes.

PART 3: MISC. TECHNICAL DATA, FORMULAS, AND CONVERSION

Calculating Discharge Rate by Using The Horizontal Open Discharge Method

The most reliable method of measuring flow is to use a flow meter. When a flow meter is not available, however, it is possible to estimate the discharge capacity by constructing an "L" shaped measuring stick similar to that shown in Figure 8-V. With the water flowing from the pipe, place the long end of the "L" on top of the pipe Position the "L" so that the end of the short 4-inch side just touches the stream of water as the stream slants downward. Note the horizontal distance "X" from this point to the open end of the discharge pipe. With the value "X" and and the nominal inside diameter of the pipe, use Table 8-X to find the discharge rate in gallons per minute.

EXAMPLE: Horizontal distance "X" is measured to be 12 inches. The size of the pipe Is known to be 1½" (nominal diameter). Find 12 inches in the left hand column of the chart and move across to the 1½" pipe size column. Table 8-X indicates that the discharge rate is 40 0 gallons per minute.

FIGURE 8-V

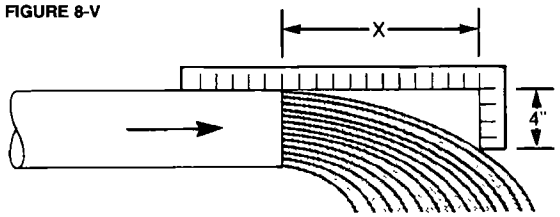

Calculating Low Capacity Outlets: A simple procedure for measuring low capacity outlets such as small pump outlets, hose spigots, and faucets is to record the amount of time it takes to fill a container of known size.

EXAMPLE: Select a container of known size such as a 5-gallon paint bucket. With a watch, measure, in seconds, the amount of time it takes to fill the bucket. If it takes 30 seconds to fill a 5-gallon bucket, Table 8-W indicates that the flow is 10.0 gallons per minute. To obtain gallons per hour (gph) multiply 10.0 x 60 to obtain 600 gph.

TABLE 8-W

Discharge Rate in Gallons Per Minute (GPM) for Low Capacity Systems

Capacity of Container (Gallons)	Time (in seconds) to Fill Container							
	10	15	20	30	45	60	90	120
	Discharge Rate in Gallons Per Minute (GPM)							
1	6 0	4.0	3 0	2.0	1.3	1.0	.7	.5
3	18 0	12.0	9.0	6.0	4.0	3.0	2.0	1.5
5	30 0	20.0	15 0	10.0	6 7	5 0	3.3	2 5
10	60.0	40.0	30 0	20.0	13 3	10.0	6 7	5.0

NOTE: Multiply gallons per minute (GPM) by 60 to obtain gallons per hour (GPH).

Calculating Distance to Water Level

Install ⅛" or ¼" pipe or tubing into the well so that the end of the tubing extends 10 to 20 feet below the lowest possible pumping water level. Be sure that all joints in the tubing are airtight. As the tubing is lowered into the well measure its length. Record the measurement.

TABLE 8-X

Discharge Rate in Gallons Per Minute (GPM) for Large Capacity Systems

Horiz. Dist. (X) Inches	Nominal Pipe Size (in Inches)									
	1	1 ¼"	1 ½"	2"	2 ½"	3"	4"	5"	6"	8"
	Discharge Rate in Gallons Per Minute (GPM)									
4	5 7	9 8	13 3	22.0	31	48	83			
5	7 1	12 2	16 6	27 5	39	61	104	163		
6	8.5	14.7	20.0	33.0	47	73	125	195	285	
7	10 0	17 1	23.2	38.5	55	85	146	228	334	380
8	11 3	19 6	26.5	44 0	62	97	166	260	380	665
9	12.8	22 0	29.8	49.5	70	110	187	293	430	750
10	14.2	24 5	33 2	55 5	78	122	208	326	476	830
11	15.6	27.0	36.5	60 5	86	134	229	360	525	915
12	17.0	29.0	40.0	66 0	94	146	250	390	570	1000
13	18.5	31.5	43.0	71.5	102	158	270	425	620	1080
14	20.0	34.0	46.5	77.0	109	170	292	456	670	1160
15	21 3	36.3	50 0	82.5	117	183	312	490	710	1250
16	22.7	39.0	53 0	88.0	125	196	334	520	760	1330
17		41.5	56.5	93 0	133	207	355	550	810	1410
18			60 0	99.0	144	220	375	590	860	1500
19				100.0	148	232	395	620	910	1580
20					156	244	415	650	950	1660
21						256	435	685	1000	1750

Once the tubing is fixed in a stationary position at the top of the well, connect an air line and pressure gauge With a tire pump or other air supply, pump air into the line until the pressure gauge reaches a point where it doesn't read any higher. Record the pressure gauge reading at this point.

Figure 8-Y illustrates a typical method for measuring distance to water level·

X = Distance to water level (in feet) This figure to be determined.

Y = Total length of air line (in feet).

Z = Length of submerged air line. This value is obtained from the pressure gauge reading which reads in pounds per square inch (psi). Multiply the pressure gauge reading by 2.31 to obtain the length of the submerged air line in feet.

Distance to water level (X) = (Y) - (Z)

= The total length of the air line (Y) minus the length of the submerged portion of the air line (Z).

Figure 8-Y

Calculating the distance to water level.

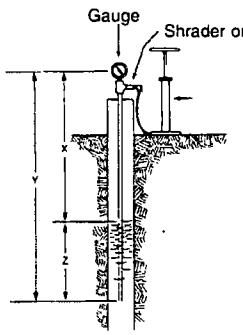

Example:

Assume that the air line is 100 feet long and the pressure gauge reads 8 psi

Calculate the distance to water level (X).

8 psi x 2 31 = 18.5 feet

(X) = 100 feet (Y) - 18 5 feet (Z)

= **81.5 feet** = distance to water level

FORMULAS

TEMPERATURE CONVERSIONS:

Degrees **C** = $\frac{5}{9}$ x (Degrees F - 32)

Degrees **F** = $\frac{9}{5}$ x Degrees C) + 32

Area of a Circle:

Area = πr^2

Circumference of a Circle:

Circumference = $2 \pi r$

r = radius

π = 3.14

Volume of a Tank or Cistern:

3.14 x (radius of tank)^2 x (ht. of tank) x 7.48 = Gallons
Radius and height of tank measured in feet
7.48 = number of gallons per cubic foot of water

WORK, POWER, AND EFFICIENCY:

The amount of work required to lift 1 pound to a height of 1 foot is defined as 1 ft.-lb. To lift 100 pounds to a height of 60 feet is 100 pounds x 60 feet = 6,000 ft-lbs. This amount of energy remains the same whether it takes one minute or one hour to lift the weight. The rate of working, however, is referred to as **power** and was 6,000 ft-lbs. per minute in the first case and 100 foot pounds per minute in the second case.

Power can be represented either mechanically or electrically. **Mechanical power** is measured in horsepower (HP). One HP is the theoretical power required to raise 33,000 pounds to a height of one foot in one minute, or:

1 HP = 33,000 ft.-lb./minute
= 550 ft.-lb./second

Electrical power is measured in watts(w) or kilowatts(kw), and:

1,000 w = 1 kw = 1.34 hp, or
1 HP = 745 w = 0.746 kw

WATER HORSEPOWER (WHP):

Water horsepower is the power required to raise water at a specified rate against a specified head, assuming 100% efficiency.

$$\text{WHP} = \frac{\text{GPM x Total Pumping Head}}{3{,}960}$$

BRAKE HORSEPOWER (BHP):

Brake horsepower is based on test data and can be either the horsepower developed at the motor shaft (motor output) or that absorbed at the pump shaft (pump input).

$$\text{Pump BHP} = \frac{\text{WHP x 100}}{\text{Pump Efficiency (\%)}}$$

$$= \frac{\text{GPM x Total Pumping Head x 100}}{\text{3,960 x Pump Efficiency (\%)}}$$

$$\text{Motor BHP} = \frac{\text{Power input x Motor Efficiency (\%)}}{100}$$

$$= \frac{\text{1 34 x kw input x Motor Efficiency (\%)}}{100}$$

PUMP EFFICIENCY:

Pumps and motors, like all machines, are not 100% efficient. Not all of the energy supplied to them is converted into useful work. Pump efficiency is the ratio of power output to power input, or

$$\text{Efficiency (\%)} = \frac{\text{Power Output x 100}}{\text{Power Input}}$$

$$\text{Pump Eff. (\%)} = \frac{\text{WHP x 100}}{\text{Pump BHP (Input)}}$$

$$= \frac{\text{GPM x Total Pumping Head x 100}}{\text{3960 x Pump BHP (Input)}}$$

$$\text{Motor Eff (\%)} = \frac{\text{Motor BHP (Output) x 100}}{\text{1.34 x kw input}}$$

$$\text{Plant Eff. (\%)} = \frac{\text{GPM x Total Pumping Head x 100}}{\text{5,300 x kw Input}}$$

ELECTRIC POWER (AC):

E = Electrical pressure (volts). Similar to hydraulic head.

I = Electrical current (amps) Similar to rate of flow.

W = Electrical power (watts) = E x I x PF

kw = Kilowatt (1,000 watts)

kw-hr. = Kilowatt-hour = 1,000 watts for one hour

Apparent Power = E x I = volt-amperes

PF = Power Factor = Useful Power ÷ Apparent Power

Power Calculations for Single-Phase Power
W (Watts) = E x I x PF
NOTE: When measuring single-phase power use a single-phase wattmeter.

Input HP to motor = W ÷ 746 = 1 34 x kw

Power Calculations for Three-Phase Power
W (Watts) = 1.73 x E x I x PF
Where: E = effective (RMS) voltage between phases
I = average current in each phase
NOTE: When measuring three-phase power use either (1) three-phase wattmeter, (2) single-phase wattmeters, or the power company's revolving disc wattmeter.

When calculating power with a revolving disc wattmeter use the following formulas:

$$\text{kw input} = \frac{\text{K x R x 3.60}}{t}$$

$$\text{Input HP (to motor)} = \frac{\text{K x R x 3,600}}{\text{746 x t}}$$

$$= \frac{\text{K x R x 4.83}}{t}$$

FORMULAS

Motor BHP (output) = $\frac{\text{Input HP x Motor Eff.(\%)}}{100}$

Where K = Meter constant = watts per revolution of revolving disc (value of K is marked on the meter nameplate or on the revolving disc). Where current transformers are used, multiply meter constant by current transformer ratio.

R = Number of disc revolutions counted.
t = Time in seconds for R revolutions.

CALCULATING OPERATING COSTS OF PUMPS:
Costs in Cents per 1,000 Gallons:

Cost (¢) = $\frac{\text{kw Input x r x 1,000}}{\text{GPH}}$

Cost in Cents per Acre-Inch

Cost (¢) = $\frac{\text{kw Input x r x 452.6}}{\text{GPM}}$

Where: r = cost of power in cents per kw-hr.

FRICTION LOSS TABLES

Friction Loss Table – SCH 40 STEEL PIPE

(Friction Loss in Feet of Head Per 100 Feet of Pipe)

GPM	GPH	1/2" ID 0.622"	3/4" ID 0.824"	1" ID 1.049"	1 1/4" ID 1.380"	1 1/2" ID 1.610"	2" ID 2.067"	2 1/2" ID 2.469"	3" ID 3.068"	4" ID 4.026"
2	120	4.8								
3	180	10	2.5							
4	240	17 1	4.2							
5	300	25 8	6.3	1 9						
6	360	36.5	8.9	2.7						
7	420	48 7	11.8	3.6						
8	480	62.7	15	4 5						
9	540	78.3	18 8	5 7						
10	600	95.9	23	6 9	1 8					
12	720		32.6	9 6	2 5	1.2				
14	840		43.5	12.8	3.3	1.5				
16	960		56.3	16.5	4 2	2				
20	1,200		86 1	25.1	6 3	2.9				
25	1,500			38.7	9.6	4.5	1 3			
30	1,800			54.6	13 6	6.3	1 8			
35	2,100			73.3	18.2	8 4	2 4			
40	2,400			95	23.5	10.8	3 1	1 3		
45	2,700				29.4	13.5	3 9	1 6		
50	3,000				36	16 4	4 7	1 9		
60	3,600				51	23.2	6.6	2 7		
70	4,200				68 8	31.3	8 9	3 6	1.2	
80	4,800				89.2	40.5	11 4	4 6	1 6	
90	5,400					51	14.2	5 8	2	
100	6,000					62.2	17 4	7 1	2 4	
120	7,200						24.7	10 1	3 4	
140	8,400						33.2	13 5	4.5	1 2
160	9,600						43	17 5	5 8	1.5
200	12,000						66.3	27	8.9	2.3
260	15,600							45	14 8	3 7
300	18,000							59 6	19 5	4.9

Friction Loss Table – SCH 40 PVC

(Friction Loss in Feet of Head Per 100 Feet of Pipe)

GPM	GPH	1/2" ID 0 622"	3/4" ID 0.824"	1" ID 1 049"	1 1/4" ID 1 380"	1 1/2" ID 1.610"	2" ID 2.067"	2 1/2" ID 2 469"	3" ID 3 068"	4" ID 4 026"
2	120	4.1								
3	180	8.7	2.2							
4	240	14 8	3.7							
5	300	22 2	5.7	1.8						
6	360	31 2	8	2 5						
7	420	41 5	10.6	3.3						
8	480	53	13.5	4.2						
9	540	66	16 8	5.2						
10	600	80 5	20 4	6.3	1.7					
12	720		28 6	8.9	2.3	1.1				
14	840		38	11.8	3.1	1 4				
16	960		48 6	15 1	4	1 9				
20	1,200		60 5	22.8	6	2.8				
25	1,500			38.7	9 1	4.3	1.3			
30	1,800				12.7	6	1.8			
35	2,100				16.9	8	2 4			
40	2,400				21 6	10 2	3	1.1		
45	2,700				28	12.5	3.8	1 4		
50	3,000					15.4	4.6	1 7		
60	3,600					21.6	6.4	2.3		
70	4,200					28.7	8.5	3	1.2	
80	4,800					36.8	10.9	3 8	1.4	
90	5,400					45 7	13.6	4 8	1.8	
100	6,000					56.6	16.5	5 7	2.2	
120	7,200						23 1	8	3	
140	8,400						30.6	10 5	4	1 1
160	9,600						39.3	13 4	5	1.4
200	12,000						66 3	20.1	7.6	2 1
260	15,600							32.4	12.2	3.4
300	18,000							42.1	15.8	4 4

Friction Loss Table – VALVES and FITTINGS

(Friction Loss in Equivalent Number of Feet of Straight Pipe)

TYPE OF FITTING AND APPLICATION	PIPE AND FITTING	NOMINAL SIZE OF FITTING AND PIPE 1/2"	3/4"	1"	1 1/4"	1 1/2"	2"	2 1/2"
		EQUIVALENT LENGTH OF PIPE(IN FEET)						
Insert Coupling	Plastic	3	3	3	3	3	3	3
Threaded Adapter (Plastic to Thread)	Plastic	3	3	3	3	3	3	3
90° Standard Elbow	Steel	2	2	3	4	4	5	6
	Plastic	2	2	3	4	4	5	6
Standard Tee (Flow Through Run)	Steel	1	2	2	3	3	4	4
	Plastic	1	2	2	3	3	4	4
Standard Tee (Flow Through Side)	Steel	4	5	6	7	8	11	13
	Plastic	4	5	6	7	8	11	13
Gate Valve①	Steel	1	1	1	1	2	2	2
Swing Check Valve①	Steel	5	7	9	12	13	17	21

NOTES:

Based on schedule 40 steel and plastic fittings.

Figures given are friction losses in terms of Equivalent Lenghts of straight pipe.

① Friction loss figures are for screwed valves and are based on equivalent lengths of steel pipe.

CONVERSION TABLES

UNITS OF FLOW

CONVERT TO ▸ / CONVERT FROM ▾	U.S. GALLONS PER MINUTE	MILLION U.S. GALLONS PER DAY	CUBIC FEET PER SECOND	CUBIC METERS PER HOUR	LITERS PER SECOND
	MULTIPLY BY:				
(1) U.S. GALLON PER MINUTE	1	0.001440	0.00223	0.2271	0.0631
(1) MILLION U.S. GALLONS PER DAY	694.5	1	1.547	157.7	43.8
(1) CUBIC FOOT PER SECOND	448.83	0.646	1	101.9	28.32
(1) CUBIC METER PER HOUR	4.403	0.00634	0.00982	1	0.2778
(1) LITER PER SECOND	15.85	0.0228	0.0353	3.60	1

UNITS OF PRESSURE AND HEAD

CONVERT TO ▸ / CONVERT FROM ▾	LBS. PER SQUARE INCH	FEET OF WATER ①	METERS OF WATER ①	INCHES OF MERCURY ②	ATMOSPHERES	KILOGRAMS PER SQUARE CM
	MULTIPLY BY:					
(1) LB. PER SQUARE INCH	1	2.31	0.704	2.04	0.0680	0.0703
(1) FOOT OF WATER ①	0.433	1	0.305	0.881	0.02945	0.0304
(1) METER OF WATER ①	1.42	3.28	1	2.89	0.0966	.1
(1) INCH OF MERCURY ②	0.491	1.135	0.346	1	0.0334	0.0345
(1) ATMOSPHERE (at Sea Level)	14.70	33.96	10.35	29.92	1	1.033
(1) KILOGRAM PER SQUARE CM	14.22	32.9	10	28.96	0.968	1

NOTES: ① Equivalent units are based on density of fresh water at 68°F.
② Equivalent units are based on density of mercury at 32°F.
Each 1,000 feet of ascent decreases pressure about ½ pound per square inch.

UNITS OF VOLUME AND WEIGHT

CONVERT TO ▸ / CONVERT FROM ▾	U.S. GALLONS	IMPERIAL GALLONS	CUBIC INCHES	CUBIC FEET	ACRE FEET	POUNDS ③	CUBIC METERS	LITERS
(1) U.S. GALLON	1	0.833	231	0.1337	3.07×10^{-6}	8.34	0.003785	3.785
(1) IMPERIAL GALLON	1.201	1	277.4	0.1605	3.69×10^{-6}	10.01	0.004546	4.546
(1) CUBIC INCH	0.00433	0.00360	1	0.000579	—	0.0361	1.64×10^{-5}	0.0164
(1) CUBIC FOOT	7.48	6.23	1728	1	2.30×10^{-5}	62.4	0.02832	28.32
(1) ACRE FOOT	325,850	271,335	—	43,560	1	2.7×10^{6}	1233.5	1.23×10^{6}
(1) POUND ③	0.120	0.0998	27.7	0.0160	3.68×10^{-7}	1	4.54×10^{-4}	0.454
(1) CUBIC METER	264.2	220	61,024	35.315	8.11×10^{-4}	2202	1	1000
(1) LITER	0.2642	0.220	61.024	0.0353	8.11×10^{-7}	2.202	0.001	1

NOTES: ③ Weight equivalent basis water at 60°F.

UNITS OF LENGTH

(1) Inch = 0.0833 Ft. = 0.0278 Yd. = 25.4 mm = 2.54 cm
(1) Ft. = 12 Inches = 0.333 Yd. = 30.48 cm = 0.3048 Meter
(1) Yard = 36 Inches = 3 Ft. = 91.44 cm = 0.9144 Meters

(1) Mile = 5280 Ft. = 1760 Yds. = 1.61 km = 1609 Meters
(1) Meter = 3.281 Ft. = 39.37 In. = 0.000621 Miles = 0.001 km
(1) Kilometer = 1000 m = 1093.61 Yds. = 0.62137 Miles = 3281 Ft.

L-SP-PG-001	2/06
PRINTED IN USA	

Subject to alterations.

U.S.A.
GRUNDFOS Pumps Corporation
17100 West 118th Terrace
Olathe, Kansas 66061
Phone: (913) 227-3400
Telefax: (913) 227-3500

www.grundfos.com

Canada
GRUNDFOS Canada Inc.
2941 Brighton Road
Oakville, Ontario
L6H 6C9
Phone: (905) 829-9533
Telefax: (905) 829-9512

Mexico
Bombas GRUNDFOS de Mexico S.A. de C.V.
Boulevard TLC No. 15
Parque Industrial Stiva Aeropuerto
C.P. 66600 Apodaca, N.L. Mexico
Phone: 011-52-81-8144 4000
Telefax: 011-52-81-8144 4010

GRUNDFOS

GRUNDFOS **PRODUCT GUIDE**

SQ, SQE, SP

Stainless steel submersible pumps and accessories
60 Hz

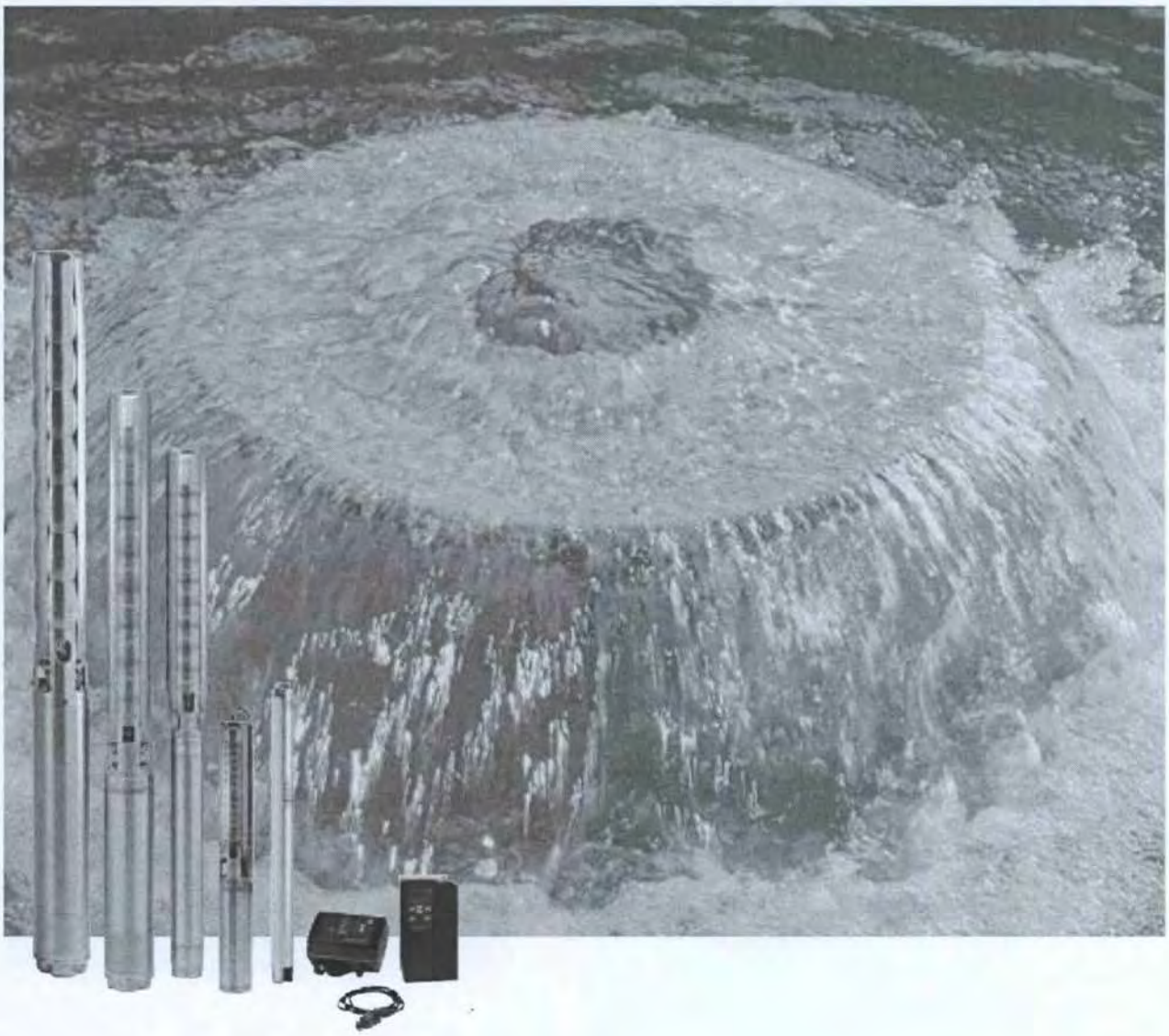

BE › THINK › INNOVATE ›

GRUNDFOS

Mission

- to successfully develop, produce, and sell high quality pumps and pumping systems worldwide, contributing to a better quality of life and healthier environment

Bjerringbro, Denmark

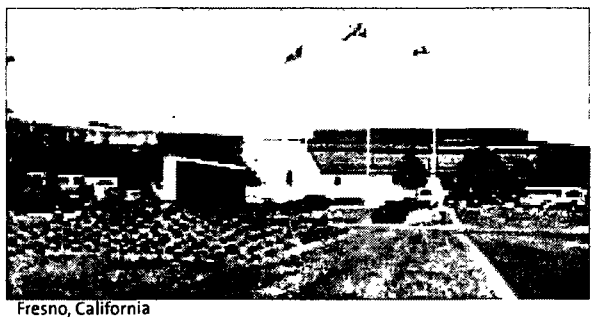

Fresno, California

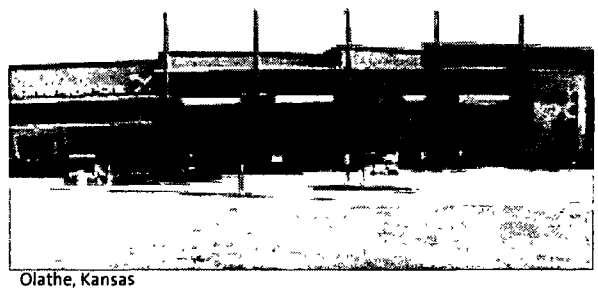

Olathe, Kansas

Monterrey, Mexico

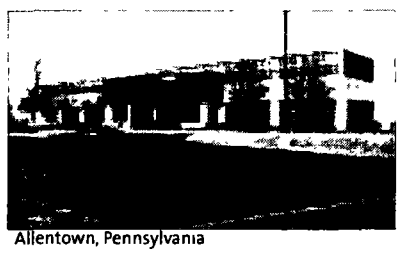

Allentown, Pennsylvania

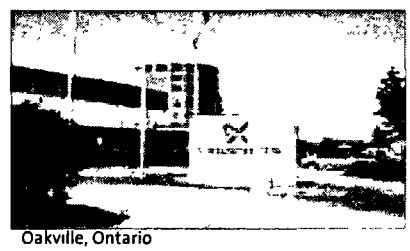

Oakville, Ontario

- One of the 3 largest pump companies in the world with over 11,000 employees worldwide
- World headquarters in Denmark
- North American headquarters in Kansas City - Manufacturing in Fresno, California
- 60 companies in 40 countries
- More than 10 million pumps produced annually worldwide
- North American companies operating in USA, Canada and Mexico
- Continuous reinvestment in growth and development enables the company to

  BE responsible, **THINK** ahead, and **INNOVATE**

Submittal Data Sheet

GRUNDFOS

Company name: _____
Prepared by: _____
Phone number: ( ) -
Fax number: ( ) -
Date: _____ Page 1 of: _____
Quote number: _____

Client Information

Project title:	Client name:
Reference number:	Client number:
Client contact:	Client phone no: ( ) -

Location Information

For:	Unit:
Site:	Service:
Address:	City: State: Zip Code:

Technical Data

Flow (GPM) _____
Head (Ft) _____
Motor _____
Max Fluid Temp _____
Min Fluid Temp _____
Max Working Pressure _____
Min Required Inlet Pressure _____
Connection Type and Size _____

Motor Information

HP: _____
Phase: _____
Voltage: _____
Enclosure: _____

Pump Information

Model Information from Type Key and Codes: _____
Quantity Required: _____ Example: SP 150S
Minimum required flow: _____ NPSH required at duty point: _____

Product Guide additional information pages

Materials page number: _____ Performance curve page number: _____
Technical data page number: Motor data page number:

Custom-built pump information (optional): _____

Additional Information _____

TABLE OF CONTENTS

Stainless Steel Submersible Pumps ..... SECTION 1
Features & Benefits
SP, SQ/SQE Type Keys

SmartFlo™ SQE 3-Inch ..... SECTION 2
Performance Curves

SmartFlo™ SQE 3-Inch System Sizing ..... SECTION 2-18

SmartFlo™ CU 321 4-Inch ..... SECTION 2-19
Performance Curves

SmartFlo™ CU 321 4-Inch System Sizing ..... SECTION 2-29

SmartFlo™ Technical Data & Accessories ..... SECTION 3-7

SQ 3-Inch Performance Curves ..... SECTION 3

Grundfos 4-Inch ..... SECTION 4
Stainless Steel Submersible Pumps
Sizing & Selection Charts
Performance Curves & Technical Data

Grundfos 6, 8 & 10-Inch ..... SECTION 5
Stainless Steel Submersible Pumps
Performance Curves & Technical Data

Groundwater Accessories ..... SECTION 5-38

Technical & Pump Selection Information ..... SECTION 6

Submittal Data Sheet ..... SECTION 6-12

GRUNDFOS STAINLESS STEEL PUMPS

STAINLESS STEEL CONSTRUCTION

Grundfos submersibles feature rugged and durable stainless steel construction for all vital pump components. Impellers, diffusers, shafts, vanes, cable guards, couplings...even the nuts and bolts are stainless steel. Grundfos' 4-inch pump systems include the stainless steel pump, motor, and control box and are delivered ready to install.

Computer-aided design and manufacturing techniques ensure that each *pump* is built to exacting tolerance and performs to industry-leading standards. Grundfos state-of-the-art production equipment includes extensive use of robotics and advanced quality assurance procedures. You can rely on quality Grundfos' groundwater products for outstanding pump performance and best value.

SUBMERSIBLES

4-INCH and LARGER WELLS
The 4-inch submersibles line covers all flow requirements from 1.2 to 95 gpm and heads to 2000 feet. This broad range ensures proper pump selection for all domestic groundwater system applications.

6, 8, & 10-INCH and LARGER WELLS
For high flow requirements, this submersible line includes 6, 8, and 10-inch models for flows up to 1,400 gpm and heads to 2100 feet.

Grundfos offers 18 models of submersible pumps designed for domestic and industrial applications with flow rates from five to 1,400 gpm. Horsepower range extends from 1/3 hp to 250 hp. These pumps are marketed through more than 300 distributors and nearly 2,000 dealers nationwide.

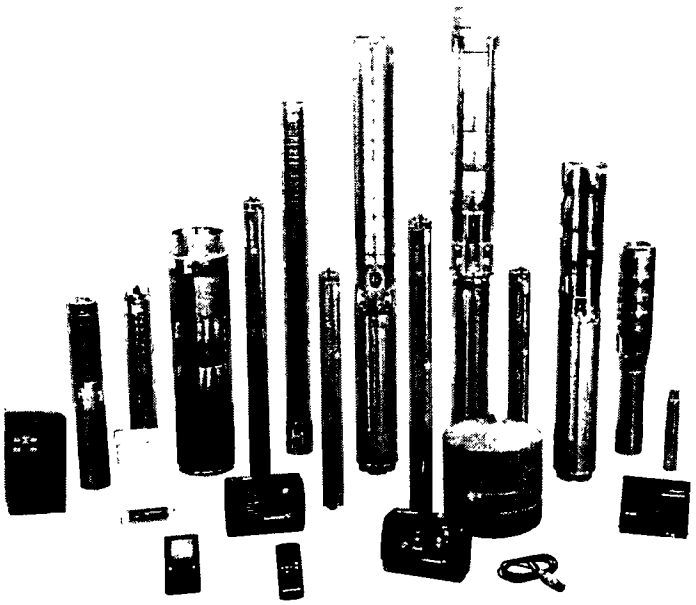

THE STAINLESS STEEL ADVANTAGE

TOP PUMP PERFORMANCE
Grundfos pumps are built to work hard with every component designed for maximum hydraulic efficiency. With the inherently smooth surfaces of fabricated stainless steel, peak performance is maintained over many years of service.

RELIABLE OPERATION
Highly advanced design and manufacturing techniques minimize the number of moving parts. This, plus Grundfos' use of rugged stainless steel construction, make GRUNDFOS groundwater pumps the toughest, most reliable pumps on the market. With Grundfos you can rely on getting the water you need, when you need it.

LONG PUMP LIFE
Stainless steel is the best available material to resist wear and corrosion in water system applications. Compare Grundfos' stainless steel construction to the best the other manufactures have to offer. Grundfos stainless steel pumps are designed to operate efficiently and effectively for a long, long time.

SQ/SQE SUBMERSIBLE PUMPS

3-Inch SQ/SQE Submersible Well Pumps
3-Inch and Larger Wells

SQ/SQE pumps are suitable for both continuous and intermittent operation for a variety of applications:

- Domestic water supply
- Small waterworks
- Irrigation
- Tank applications

SQ, SQE pumps offer the following features:

- Dry-Run protection
- High efficiency pump and motor
- Protection against up-thrust
- Soft-start
- Over-voltage and under-voltage protection
- Overload protection
- Over-temperature protection
- High starting torque

Additionally, the SQE pumps offer:

- Constant pressure control
- Variable speed
- Electronic control and communication

The SQ and SQE pump models incorporate an innovative motor design. With the use of permanent-magnet technology within the motor, the SQ/SQE pumps deliver unmatched performance. By combining permanent-magnet motors and Grundfos's own micro frequency converter, we are now able to control and communicate with the pump in ways never before possible. A few of the features that come out of this combination are Constant Pressure Control, Soft-Start, and integrated Dry-Run protection. These are just a few of the many features that the SQ/SQE pumps can offer.

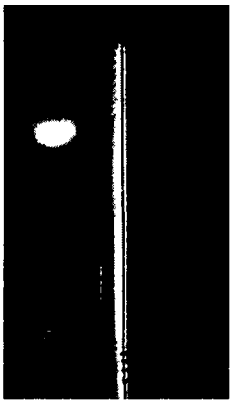

The SQ pump models operate at a constant speed much like today's conventional pumps. The difference between it and traditional pumps is you get all the benefits of an electronically controlled permanent-magnet motor that cannot be accomplished with a conventional induction motor. The SQ pumps are available for single phase power. They use a simple 2-wire design making installation easy.

The SQE uses the Grundfos "Smart Motor". Like the SQ model, we still use the high efficiency permanent magnet motor, but we give this motor the ability to communicate. The "Smart Motor" communicates via the CU301 status box through the power leads. It is not necessary to run any additional wires down the well. By being able to communicate with the pump you can have Constant Pressure Control and the ability to change the pump performance while the pump is installed in the well. Like the SQ motor, this is also a 2-wire motor designed for single-phase operation.

TYPE KEYS

SP Example 10 S 05 - 9

- 10 — Rated gallons per minute
- S — Material of construction
- 05 — Horsepower
- 9 — Number of pump stages

SQ/SQE Example 10 SQ E 05 - 160

- 10 — Rated gallons per minute
- SQ — Basic version (without communication)
- E — Electronic communication
- 05 — Horsepower
- 160 — Total Dynamic Head in (ft) at rated flow

Easy Selection Chart
Performance Curves and Technical Data

4-Inch Submersible Pumps

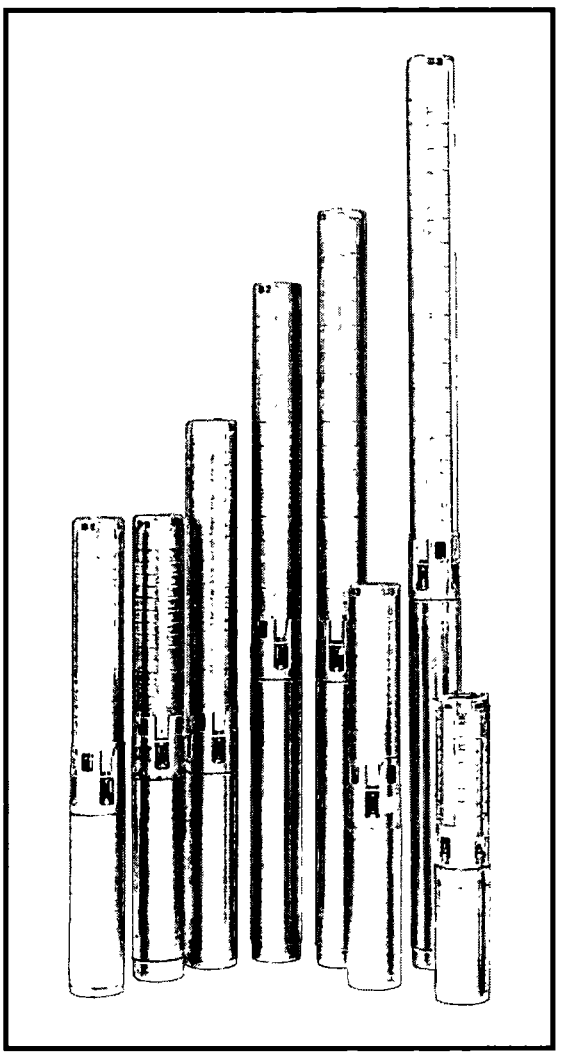

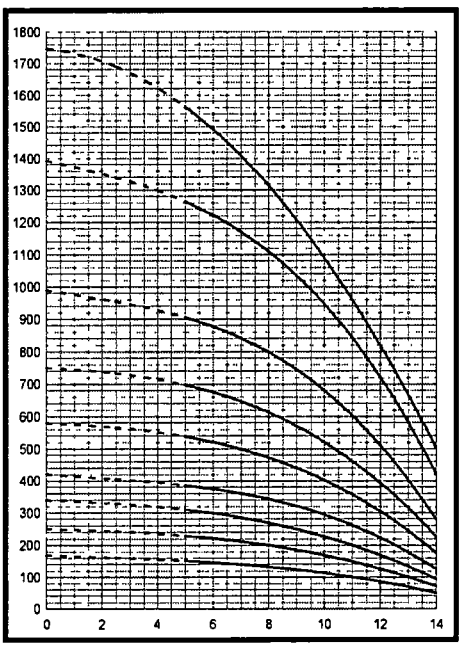

Performance Curves

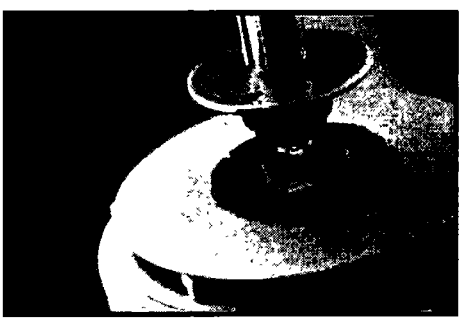

Materials of Construction

Grundfos Stainless Steel Submersible Pumps

4" Submersible
Easy Selection Charts.

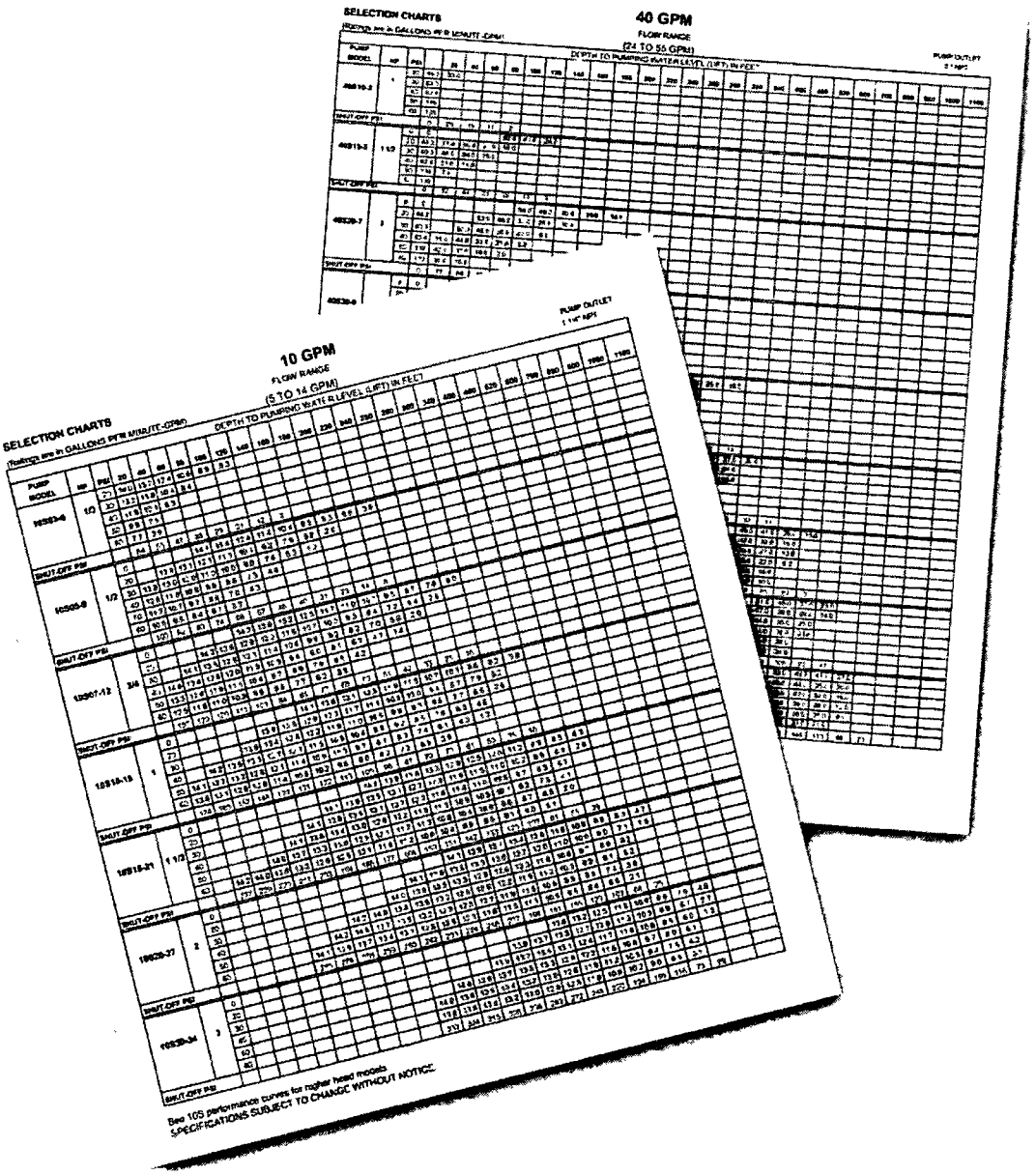

5 GPM

SELECTION CHARTS

FLOW RANGE (1.2 TO 7 GPM)

PUMP OUTLET 1 " NPT

(Ratings are in GALLONS PER MINUTE-GPM)

			DEPTH TO PUMPING WATER LEVEL (LIFT) IN FEET																									
PUMP MODEL	HP	PSI	20	40	60	80	100	120	140	160	180	200	220	240	260	280	300	340	400	460	520	600	700	800	900	1000	1100
5S03-9	1/3	0				7.1	6.7	6.2	5.8	5.3	4.8	4.3	3.2	2.1													
		20		7.0	6.6	6.1	5.7	5.2	4.6	4.0	2.8	1.6															
		30		6.5	6.0	5.6	5.1	4.6	3.8	2.9	1.5																
		40	6.7	6.0	5.5	5.1	4.4	3.8	2.4																		
		50	6.2	5.5	4.9	4.4	3.4	2.5	1.3																		
		60	5.6	4.9	4.2	3.5	1.9																				
SHUT-OFF PSI:			102	94	85	76	68	59	50	42	33	24	16	7													
5S05-13	1/2	0						7.1	6.8	6.4	6.1	5.8	5.5	5.2	4.8	4.5	3.9	2.3									
		20			7.3	7.0	6.7	6.3	6 0	5.7	5.4	5.1	4.7	4.3	3.7	3 1	2.0										
		30		7.2	6.9	6.6	6.3	6.0	5.7	5.4	5.0	4.7	4.2	3.7	2.8	2.0											
		40	7.2	6.9	6.6	6.3	5.9	5.6	5.3	5.0	4.6	4.2	3.5	2.8	1.6												
		50	6.8	6.5	6.2	5.9	5.6	5.3	4.9	4.6	4.0	3.5	2.6	1.6													
		60	6.5	6.2	5.8	5.5	5.2	4.9	4.5	4.0	3.3	2.6	1.3														
SHUT-OFF PSI:			152	143	134	126	117	108	100	91	82	74	65	56	48	39	30	13									
5S07-18	3/4	0								7.1	6.9	6.7	6.4	6.2	6.0	5.8	5.6	5.1	4.2	2.7							
		20						7.1	6.8	6.6	6.4	6.2	5.9	5.7	5.5	5.3	5.0	4.5	3.2								
		30					7.0	6.8	6.6	6.3	6.1	5.9	5.7	5.5	5.2	5.0	4.7	4.0	2.5								
		40			7.2	7.0	6.8	6.5	6.3	6.1	5.9	5.6	5.4	5.2	4.9	4.7	4.4	3.5	1.5								
		50		7.2	7.0	6.7	6.5	6 3	6.1	5.8	5.6	5.4	5.1	4.9	4.6	4.3	3.9	2.9									
		60	7.1	6.9	6.7	6.5	6.2	6.0	5.8	5.6	5.3	5.1	4.9	4.6	4.3	3.9	3.4	2.1									
SHUT-OFF PSI:			213	204	195	187	178	169	161	152	143	135	126	117	109	100	91	74	48	22							
5S10-22	1	0										7.1	6.9	6.7	6 6	6.4	6.2	5.8	5.3	4.7	3.8	1.7					
		20								7.1	6.9	6.7	6.5	6.3	6 1	6.0	5.8	5.4	4.8	4.0	2.8						
		30							7.0	6.8	6.7	6.5	6.3	6.1	5.9	5.7	5.6	5.2	4.6	3.6	2.1						
		40						7.0	6.8	6.6	6.5	6.3	6.1	5.9	5.7	5.5	5.4	5.0	4.3	3.1	1.3						
		50				7.2	7.0	6.8	6.6	6.4	6.2	6.1	5.9	5.7	5.5	5.3	5.1	4.7	3.9	2.5							
		60			7.1	6.9	6.8	6.6	6.4	6.2	6.0	6.0	5.7	5.5	5.3	5.1	4.9	4.4	3.5	1.7							
SHUT-OFF PSI:					245	237	228	219	211	202	194	185	176	168	159	150	142	124	98	72	46	12					
5S15-26	1 1/2	0												7.1	7.0	6.8	6.7	6.4	5.9	5.4	4.9	4.1	2.1				
		20										7.1	6.9	6.8	6.6	6.5	6.3	6.0	5.5	5.1	4.5	3.4					
		30									7.1	6.9	6.7	6.6	6.4	6.3	6.1	5.8	5.4	4.8	4.2	2.9					
		40								7.0	6.9	6.7	6.6	6.4	6.3	6.1	6.0	5.6	5.2	4.6	5.6	2.4					
		50							7.0	6.9	6.7	6.5	6.4	6.2	6.1	5.9	5.8	5.5	5 0	4.4	3.6	1.7					
		60						7.0	6.8	6.7	6.5	6.4	6.2	6.1	5.9	5.8	5.6	5.3	4.8	4.1	3.1						
SHUT-OFF PSI:								269	260	252	243	234	226	217	208	200	191	174	148	122	96	61	18				
5S15-31	1 1/2	0														7.1	7.0	6.7	6.3	5.9	5.5	6.7	4.1	2.6			
		20												7.1	6.9	6.8	6.7	6.4	6.0	5.6	5.2	4.6	3.5	1.6			
		30											7.0	6.9	6.8	6.6	6.5	6.2	5.9	5.5	5.1	4.4	3.2	0.9			
		40										7.0	6.9	6.8	6.6	6.5	6.4	6.1	5.7	5.3	4.9	4.2	2.8				
		50								7.1	7.0	6.9	6.7	6.6	6.5	6.3	6.2	6.0	5.6	5.2	4.7	4.0	2.3				
		60							7.1	7.0	6.8	6.7	6.6	6.5	6.3	6.2	6.1	5.8	5.4	5.0	4.5	3.7	1.7				
SHUT-OFF PSI:									320	311	303	294	285	277	268	259	251	233	207	181	155	121	77	34			

See 5S performance curves for higher head models

SPECIFICATIONS SUBJECT TO CHANGE WITHOUT NOTICE.

7S EASY SELECTION CHART

7 GPM

SELECTION CHARTS

(Ratings are in GALLONS PER MINUTE-GPM)

FLOW RANGE
(3 TO 10 GPM)

PUMP OUTLET
1" NPT

			DEPTH TO PUMPING WATER LEVEL (LIFT) IN FEET																								
PUMP MODEL	HP	PSI	20	40	60	80	100	120	140	160	180	200	220	240	260	280	300	340	400	460	520	600	700	800	900	1000	1100
7S03-8	1/3	20	10.0	9.5	8.7	8.0	7.2	6.4	5.0	3.7	1.8																
		30	9.3	8.7	7.9	7.1	6.1	5.1	2.6																		
		40	8.5	7.8	7.0	6.1	4.5	2.9	1.5																		
		50	7.6	6.9	5.8	4.7	2.3																				
		60	6.7	5.8	3.9	2.0																					
SHUT-OFF PSI:			86	77	69	60	52	43	34	26	17	8															
7S05-11	1/2	0					9.9	9.5	8.9	8.4	7.8	7.3	6.7	6.0	5.0	4.0											
		20			9.8	9.3	8.8	8.2	7.7	7.1	6.5	5.8	4.7	3.5	1.8												
		30	10.1	9.7	9.2	8.7	8.1	7.6	7.0	6.4	5.6	4.7	2.9														
		40	9.6	9.2	8.6	8.1	7.5	6.9	6.2	5.6	4.3	3.0	1.5														
		50	9.1	8.5	8.0	7.4	6.8	6.2	5.3	4.3	2.2																
		60	8.4	7.9	7.3	6.8	6.0	5.3	3.8	2.3																	
SHUT-OFF PSI:			122	113	105	96	87	79	70	61	53	44	35	27	18	10											
7S07-15	3/4	0						10.2	9.9	9.5	9.2	8.8	8.4	8.0	7.6	7.1	6.7	5.6	2.9								
		20				10.1	9.8	9.4	9.0	8.6	8.2	7.8	7.4	7.0	6.5	6.1	5.4	3.6									
		30			10.0	9.7	9.4	9.0	8.6	8.2	7.8	7.4	6.9	6.5	5.9	5.4	4.5	1.8									
		40		10.0	9.7	9.3	8.9	8.5	8.1	7.7	7.3	6.9	6.4	5.9	5.2	4.5	3.2	1.0									
		50	9.9	9.6	9.2	8.9	8.5	8.1	7.6	7.2	6.8	6.4	5.8	5.2	4.2	3.2	1.6										
		60	9.5	9.2	8.8	8.4	8.0	7.6	7.2	6.7	6.2	5.7	4.9	4.2	2.8	1.4											
SHUT-OFF PSI:			170	101	153	144	135	127	118	110	101	92	84	75	66	58	49	32	6								
7S10-19	1	0								10.1	9.8	9.6	9.3	9.0	8.7	8.4	8.0	7.4	6.4	4.8							
		20						10.0	9.8	9.5	9.2	8.9	8.6	8.3	7.9	7.6	7.3	6.6	5.3	2.8							
		30					10.0	9.7	9.5	9.2	8.9	8.5	8.2	7.9	7.6	7.3	6.9	6.2	4.6	1.4							
		40				10.0	9.7	9.4	9.1	8.8	8.5	8.2	7.8	7.5	7.2	6.9	6.5	5.6	3.7								
		50		10.2	9.9	9.7	9.4	9.1	8.8	8.4	8.1	7.8	7.5	7.2	6.8	6.5	6.0	5.0	2.4								
		60	10.1	9.9	9.6	9.3	9.0	8.7	8.4	8.1	7.8	7.4	7.1	6.8	6.4	6.0	5.5	4.2									
SHUT-OFF PSI:			218	209	200	192	183	174	166	157	148	140	131	123	114	105	97	79	53	27							
7S15-26	1 1/2	0											10.1	9.9	9.7	9.5	9.3	8.8	8.1	7.4	6.7	5.5					
		20									10.0	9.8	9.6	9.4	9.2	9.0	8.8	8.3	7.6	6.9	6.1	4.4					
		30								10.0	9.8	9.6	9.4	9.2	9.0	8.7	8.5	8.0	7.3	6.6	5.7	3.7					
		40						10.1	10.0	9.8	9.6	9.4	9.1	8.9	8.7	8.5	8.2	7.8	7.1	6.3	5.2	2.9					
		50					10.1	9.9	9.7	9.6	9.3	9.1	8.9	8.7	8.4	8.2	8.0	7.5	6.8	5.9	4.7	1.9					
		60				10.1	9.9	9.7	9.5	9.3	9.1	8.9	8.6	8.4	8.2	7.9	7.7	7.2	6.5	5.5	4.1						
SHUT-OFF PSI:						274	265	257	248	239	231	222	213	205	196	187	179	161	135	110	84	49					
7S20-32	2	0	0										10.6	10.5	10.4	10.4	10.3	10.1	9.6	9.1	8.4	7.3	5.7				
		20	46.2								10.5	10.5	10.4	10.3	10.3	10.2	10.0	9.8	9.2	8.6	7.8	6.6	4.8				
		30	69.3							10.5	10.5	10.4	10.3	10.2	10.1	10.0	9.9	9.6	9.0	8.3	7.5	6.2	4.3				
		40	92.4						10.5	10.5	10.4	10.3	10.2	10.1	10.0	9.9	9.7	9.4	8.8	8.0	7.2	5.8	3.9				
		50	116						10.5	10.4	10.3	10.2	10.1	10.0	9.8	9.7	9.5	9.1	8.5	7.7	6.8	5.4	3.3				
		60	139					10.5	10.4	10.3	10.2	10.1	10.0	9.8	9.7	9.5	9.3	8.9	8.2	7.4	6.4	5.0					
SHUT-OFF PSI:							343	334	326	317	308	300	291	282	274	265	256	239	213	187	161	126	83				

SPECIFICATIONS SUBJECT TO CHANGE WITHOUT NOTICE.

10 GPM

SELECTION CHARTS

FLOW RANGE (5 TO 14 GPM)

PUMP OUTLET 1 1/4" NPT

(Ratings are in GALLONS PER MINUTE-GPM)

			DEPTH TO PUMPING WATER LEVEL (LIFT) IN FEET																									
PUMP MODEL	HP	PSI	20	40	60	80	100	120	140	160	180	200	220	240	260	280	300	340	400	460	520	600	700	800	900	1000	1100
10S03-6	1/3	20	14.0	13.2	12.4	10.6	8.9	5.3																			
		30	13.2	11.8	10 4	8.4																					
		40	11.9	10.1	8.3																						
		50	9.8	7.5																							
		60	7.7	3.9																							
SHUT-OFF PSI:			64	55	47	38	29	21	12	3																	
10S05-9	1/2	0				14.1	13.4	12.4	11.4	10.4	9.5	8.3	6.6	3.5													
		20		13.9	13.1	12.1	11.1	10.1	9.2	7.9	5.8	2.0															
		30	13.8	13.0	12.0	11.0	10.0	9.0	7.6	5.3	1.2																
		40	12.8	11.8	10.8	9.8	8.8	7.3	4.8																		
		50	11.7	10.7	9.7	8.6	7.0	4.3																			
		60	10.5	9.5	8.4	6.7	3.7																				
SHUT-OFF PSI:			100	92	83	74	66	57	48	40	31	23	14	5													
10S07-12	3/4	0					14.3	13.8	13.2	12.5	11.7	11.0	10.2	9.5	8.7	7.6	6.0										
		20			14.2	13.6	12.9	12.2	11.5	10.7	10.0	9.3	8.4	7.2	5.4	2.6											
		30		14.1	13.5	12.9	12.1	11.4	10.6	9.9	9.2	8.2	7.0	5.0	2.0												
		40	14.0	13.4	12.8	12.0	11.3	10.5	9.8	9.0	8.1	6.7	4 7	1.4													
		50	13.3	12.6	11.9	11.1	10.4	9.7	8.9	7.9	6.5	4.2															
		60	12.5	11.8	11.0	10.3	9.6	8.8	7.7	6.2	3.8																
SHUT-OFF PSI:			137	129	120	111	103	94	85	77	68	59	51	42	33	25	16										
10S10-15	1	0							14.1	13.6	13.1	12.5	11.9	11.3	10.7	10.1	9.6	8.2	3.8								
		20					13.9	13.5	12.9	12.3	11.7	11.1	10.5	10.0	9.4	8.7	7.9	5.2									
		30				13.9	13.4	12.8	12.2	11.6	11.0	10.5	9.9	9.3	8.6	7.7	6.6	2.6									
		40		14.2	13.8	13.3	12.7	12.1	11.5	10.9	10.4	9.8	9.2	8.5	7.6	6.3	4.6										
		50	14.1	13.7	13.2	12.6	12.1	11.4	10.9	10.3	9.7	9.1	8.3	7.4	6.1	4.3	1.7										
		60	13.6	13.1	12.6	12.0	11.4	10.8	10.2	9.6	9.0	8.2	7.2	5.9	3.9												
SHUT-OFF PSI:			174	165	157	148	139	131	122	113	105	96	87	79	70	61	53	35	10								
10S15-21	1 1/2	0									14.2	13.9	13.6	13.3	12.9	12.5	12.0	11.2	9.9	8.5	6.3						
		20							14.1	13.9	13.5	13.1	12.7	12.3	11.9	11.5	11.0	10.2	8.9	6.9	2.9						
		30						14.1	13.8	13.5	13.1	12.7	12.3	11.8	11.4	11.0	10.5	9.7	8.3	5.7							
		40					14.1	13.6	13.4	13.0	12.6	12.2	11.8	11.3	10.9	10.5	10.1	9.2	7.5	4.1							
		50				14.0	13.7	13.3	13.0	12.5	12.1	11.7	11.3	10.8	10.4	10.0	9.6	8.7	6.5	2.0							
		60		14.2	14.0	13.6	13.3	12.9	12.5	12.1	11.6	11 2	10.8	10.4	9.9	9.5	9.1	8.0	5.1								
SHUT-OFF PSI:				237	229	220	211	203	194	185	177	168	159	151	142	133	125	107	81	55	29						
10S20-27	2	0												14.1	13.9	13.7	13.4	12.8	11.8	10.8	9.8	8.3	4.7				
		20										14.1	13.8	13.6	13 3	13.0	12.7	12.0	11.0	10.0	9.0	7.1	1.5				
		30									14.0	13.8	13.5	13.3	12.9	12.6	12.3	11.6	10.6	9.7	8.6	6.2					
		40							14.2	14.0	13.8	13.5	13.2	12.9	12.6	12.2	11.9	11.2	10.3	9.3	8.1	5.2					
		50						14.2	14.0	13.7	13.5	13.2	12.8	12.5	12.2	11.9	11.5	10.9	9.9	8.9	7.4	3.8					
		60					14.1	13.9	13.7	13.4	13.1	12.8	12.5	12.1	11.8	11.5	11.1	10.5	9.5	8.4	6.6	2.1					
SHUT-OFF PSI:							285	276	268	259	250	242	233	224	216	207	198	181	155	129	103	68	25				
10S30-34	3	0																13.8	13.2	12.5	11.9	10.9	9.6	7.9	4.8		
		20														13.9	13.7	13.3	12.7	12.0	11.3	10.3	8.9	6.7	2.7		
		30													13.9	13.7	13 5	13.1	12.4	11.7	11.0	10.0	8.5	6.0	1.3		
		40											14.0	13.8	13.7	13.5	13.3	12.8	12.2	11.5	10.8	9.7	8.0	5.1			
		50										14.0	13.8	13.6	13.4	13.2	13.0	12.6	11.9	11.2	10.5	9.4	7.5	4.2			
		60										13.8	13.6	13.4	13.2	13.0	12.8	12.3	11.6	10.9	10.2	9.0	6.9	3.1			
SHUT-OFF PSI:												332	324	315	306	298	289	272	246	220	194	159	116	73	29		

See 10S performance curves for higher head models.
SPECIFICATIONS SUBJECT TO CHANGE WITHOUT NOTICE.

16S EASY SELECTION CHART

16 GPM

SELECTION CHARTS

(Ratings are in GALLONS PER MINUTE-GPM)

FLOW RANGE
(10 TO 20 GPM)

PUMP OUTLET
1 1/4 " NPT

			DEPTH TO PUMPING WATER LEVEL (LIFT) IN FEET																								
PUMP MODEL	**HP**	**PSI**	**20**	**40**	**60**	**80**	**100**	**120**	**140**	**160**	**180**	**200**	**220**	**240**	**260**	**280**	**300**	**340**	**400**	**460**	**520**	**600**	**700**	**800**	**900**	**1000**	**1100**
16S05-5	1/2	20	20.3	18.2	14.1	10.0	5.0																				
		30	17.3	14.4	8.0	1.6																					
		40	12.7	8.0	4.0																						
		50	6.5																								
		60	2.9																								
SHUT-OFF PSI:			58	49	40	32	23	14																			
16S07-8	3/4	0					20.5	19.2	17.5	15.8	12.8	9.8	5.2														
		20			20.1	18.8	16.9	15.2	11.8	8.5	4.3																
		30	21.2	19.9	18.4	16.9	14.3	11.8	7.5	3.2	1.6																
		40	19.7	18.3	16.3	14.3	10.8	7.2	3.6																		
		50	17.9	16.3	13.5	10.7	6.2	1.7																			
		60	15.7	13.5	9.6	5.8	2.9																				
SHUT-OFF PSI:			97	88	80	71	62	54	45	36	28	19	10														
16S10-10	1	0						20.8	19.8	18.8	17.3	15.9	13.7	11.4	8.0	4.7											
		20				20.5	19.4	18.3	16.8	15.3	12.9	10.5	7.0	3.5	1.8												
		30			20.3	19.3	18.1	16.8	14.8	12.8	9.8	6.7	3.3														
		40		20.2	19.1	18.0	16.4	14.8	12.2	9.6	5.9	2.3															
		50	20.0	19.0	17.7	16.3	14.2	12.0	8.8	5.6	2.8																
		60	18.8	17.6	15.8	14.1	11.3	8.6	4.8																		
SHUT-OFF PSI:			123	115	106	97	89	80	71	63	54	45	37	28	19	11											
16S15-14	1 1/2	0								21.0	20.3	19.6	18.8	18.0	16.9	15.8	14.3	10.7	3.3								
		20							20.1	19.3	18.5	17.7	16.6	15.4	13.8	12.2	10.0	5.1									
		30					20.7	20.0	19.2	18.4	17.4	16.5	15.1	13.7	11.8	9.8	7.3	2.4									
		40				20.6	19.8	19.1	18.3	17.4	16.0	15.0	13.3	11.6	9.3	7.0	4.3										
		50			20.4	19.8	18.9	18.2	17.2	16.1	14.7	13.2	11.2	9.1	6.5	3.9	2.0										
		60		20.3	19.6	18.8	18.0	17.1	15.8	14.5	12.8	11.0	8.6	6.3	3.4												
SHUT-OFF PSI:				167	158	149	141	132	123	115	106	97	89	80	71	63	54	37	28								
16S20-18	2	0										21.2	20.6	20.0	19.5	18.9	18.2	16.7	13.5	8.8	2.7						
		20									20.4	19.8	19.3	18.7	18.0	17.3	16.4	14.3	10.0	4.2							
		30								20.3	19.8	19.2	18.6	17.9	17.2	16.3	15.3	12.8	7.9	1.9							
		40							20.3	19.7	19.1	18.5	17.8	17.1	16.1	15.2	13.9	11.1	5.7								
		50						20.2	19.6	19.0	18.3	17.7	16.8	16.0	14.9	13.8	12.3	9.2	3.2								
		60					20.1	19.5	18.9	18.3	17.5	16.8	15.8	14.8	13.5	12.3	10.6	7.0									
SHUT-OFF PSI:							194	186	177	168	160	151	142	134	125	116	108	90	65	39	13						
16S30-24	3	0																19.6	18.3	16.5	14.2	9.8	2.1				
		20													20.3	19.9	19.5	18.6	17.0	14.8	11.8	6.5					
		30												20.3	19.8	19.4	19.0	18.0	16.3	13.7	10.4	4.7					
		40											20.2	19.8	19.3	18.9	18.4	17.3	15.3	12.5	8.9	2.8					
		50										20.2	19.8	19.3	18.8	18.3	17.8	16.7	14.3	11.3	7.3						
		60									20.1	19.7	19.2	18.8	18.3	17.8	17.2	15.8	13.3	9.8	5.5						
SHUT-OFF PSI:											239	230	221	213	204	195	187	169	143	117	91	57	13				
16S50-38	5	0																			21.5	20.4	18.7	16.5	13.4	8.9	2.1
		20																			20.9	19.6	17.7	15.2	11.5	6.1	
		30																		21.4	20.5	19.2	17.2	14.5	10.5	4.5	
		40																		21.1	20.2	18.8	16.7	13.7	9.3	2.7	
		50																	21.6	20.7	19.8	18.4	16.1	12.8	8.0	0.8	
		60																	21.3	20.4	19.4	17.9	15.4	11.9	6.6		
SHUT-OFF PSI:																			314	288	262	227	184	141	98	54	11

See 16S performance curves for higher head models.
SPECIFICATIONS SUBJECT TO CHANGE WITHOUT NOTICE.

25 GPM

SELECTION CHARTS

(Ratings are in GALLONS PER MINUTE-GPM)

FLOW RANGE
(18 TO 32 GPM)

PUMP OUTLET
1 1/2" NPT

			DEPTH TO PUMPING WATER LEVEL (LIFT) IN FEET																									
PUMP MODEL	**HP**	**PSI**	**20**	**40**	**60**	**80**	**100**	**120**	**140**	**160**	**180**	**200**	**220**	**240**	**260**	**280**	**300**	**340**	**400**	**460**	**520**	**600**	**700**	**800**	**900**	**1000**	**1100**
25S05-3	**1/2**	20	18.6	6.5	3.3																						
		30	10.5																								
		40																									
		50																									
		60																									
SHUT-OFF PSI:			31	22	13	5																					
25S07-5	**3/4**	0			34.5	29.8	23.9	18.1																			
		20	32.9	28.6	21.8	15.1	7.5																				
		30	27.1	22.5	12.3	2.0																					
		40	19.5	11.8	5.8																						
		50	10.1																								
		60	4.1																								
SHUT-OFF PSI:			57	48	39	31	22	13																			
25S10-7	**1**	0					31.3	28.5	24.3	20.2	12.7	5.1															
		20		33.2	30.3	27.6	22.9	18.3	10.4	2.5	1.3																
		30	33.0	29.9	26.5	23.1	13.0	9.6	4.8																		
		40	29.4	26.6	21.3	16.2	8.2																				
		50	25.3	21.5	14.3	7.0	3.5																				
		60	19.7	13.9	7.0																						
SHUT-OFF PSI:			83	74	65	57	48	39	31	22	13	5															
25S15-9	**1 1/2**	0						32.2	30.0	27.9	24.8	21.6	16.3	10.8													
		20				31.5	29.3	27.2	23.7	20.3	14.5	8.8	4.4														
		30			31.3	29.1	26.4	23.7	18.9	14.2	7.8	1.5															
		40		30.8	28.6	26.3	22.6	18.8	12.8	6.8	3.4																
		50	30.6	28.4	25.5	22.5	17.4	12.3	6.2																		
		60	27.8	25.5	21.3	17.2	11.0	4.8	2.4																		
SHUT-OFF PSI:			109	100	91	83	74	65	57	48	39	31	22	13													
25S20-11	**2**	0						33.1	31.1	29.3	27.8	25.1	22.5	18.5	14.5	9.3											
		20					32.5	30.6	28.8	27.0	24.3	21.5	17.3	13.0	7.8	2.5											
		30				32.0	30.3	28.7	26.4	24.2	20.6	16.9	12.0	7.0	3.5												
		40			31.8	30.1	28.2	26.3	23.3	20.4	15.9	11.4	6.3														
		50		31.5	29.8	28.1	25.7	23.3	19.4	15.6	10.4	5.3	2.7														
		60	31.3	29.6	27.6	25.6	22.4	19.3	14.5	9.8	4.9																
SHUT-OFF PSI:			135	126	118	109	100	92	83	74	66	57	48	40	31	23											
25S30-15	**3**	0										32.3	31.0	29.8	28.4	27.1	25.2	20.7									
		20								31.8	30.6	29.3	28.0	26.6	24.6	22.7	19.8	13.5									
		30						33.0	31.7	30.4	29.2	27.8	26.2	24.5	22.1	19.7	16.4	9.3									
		40					32.8	31.5	30.3	29.0	27.5	26.0	24.0	21.9	19.0	16.1	12.4	4.9									
		50				32.6	31.3	30.0	28.7	27.4	25.7	23.8	21.3	18.8	15.3	12.0	8.2	2.2									
		60			32.4	31.1	29.8	28.6	27.0	25.5	23.3	21.2	18.1	15.0	11.3	7.6	3.8										
SHUT-OFF PSI:					170	161	152	144	135	126	118	109	100	92	83	74	66	48									
25S50-26	**5**	0																32.5	30.3	28.0	25.3	19.9	10.2				
		20															32.3	30.8	28.6	25.9	22.5	15.8	5.0				
		30														32.1	31.3	29.9	27.7	24.7	20.8	13.5	2.5				
		40													32.0	31.3	30.5	29.1	26.7	23.3	18.9	11.0					
		50											32.7	31.8	31.2	30.4	29.7	28.2	25.5	21.8	16.8	8.5					
		60										32.5	31.8	31.0	30.3	29.6	28.8	27.3	24.3	20.0	14.6	5.8					
SHUT-OFF PSI:												253	245	236	227	219	210	193	167	141	115	80	37				

See 25S performance curves for higher head models.
SPECIFICATIONS SUBJECT TO CHANGE WITHOUT NOTICE.

40S EASY SELECTION CHART

40 GPM

SELECTION CHARTS

(Ratings are in GALLONS PER MINUTE-GPM)

FLOW RANGE
(24 TO 55 GPM)

PUMP OUTLET
2" NPT

PUMP MODEL	HP	PSI		DEPTH TO PUMPING WATER LEVEL (LIFT) IN FEET																									
				20	40	60	80	100	120	140	160	180	200	220	240	260	280	300	340	400	460	520	600	700	800	900	1000	1100
40S10-3	1	20	46 2	33 0																								
		30	69 3																									
		40	92 4																									
		50	116																									
		60	139																									
SHUT-OFF PSI:			0	28	19	11	2																					
40S15-5	1 1/2	0	0				52.0	41.0	24.0																			
		20	46 2	57.0	50.0	37.0	18.0																					
		30	69 3	48.0	34.0	15.0																						
		40	92.4	31.0	11.0																							
		50	116	7.0																								
		60	139																									
SHUT-OFF PSI:			0	52	44	35	26	18	9																			
40S20-7	2	0	0					54.0	49.0	40 0	29.0	15.0																
		20	46 2			53 0	46 0	37.0	25 0	10 0																		
		30	69 3		52 0	45.0	35.0	23.0	8 0																			
		40	92 4	51.0	44 0	33.0	21 0	5.0																				
		50	116	42.0	32 0	18.0	2.0																					
		60	139	30.0	16 0																							
SHUT-OFF PSI:			0	77	68	59	51	42	33	25	16	7																
40S30-9	3	0	0							53 0	47.0	41.0	32 0	22.0														
		20	46 2					51.0	45.0	38.0	29.0	19.0																
		30	69 3				50 0	44.0	37 0	28.0	17.0																	
		40	92 4		54 0	50.0	43.0	35.0	26.0	15.0																		
		50	116	54.0	49.0	42.0	34.0	24.0	13.0																			
		60	139	48.0	41.0	33.0	23.0	11.0																				
SHUT-OFF PSI:			0	102	94	85	76	68	59	50	42	33	24	16	7													
40S50-12	5	0	0									53.0	49.0	44.0	39 0	32.0	25 0	16.0										
		20	46 2							52.0	48 0	43 0	37.0	30.0	22.0	13 0												
		30	69.3						51.0	47.0	42.0	36 0	29.0	21 0	12 0													
		40	92 4					51 0	46.0	41.0	35.0	28.0	20.0	11.0														
		50	116			54.0	50.0	45.0	40.0	34.0	26.0	18.0	9 0															
		60	139		53.0	49.0	45 0	39.0	33.0	25.0	17 0	8.0																
SHUT-OFF PSI:			0		130	122	113	104	96	87	78	70	61	52	44	35	26	18										
40S50-15	5	0	0											52.0	49.0	46.0	42.0	37.0	26.0									
		20	46 2									51.0	48.0	45 0	40.0	35 0	30 0	24.0										
		30	69.3								51.0	48.0	44.0	40 0	35.0	29.0	23.0	16 0										
		40	92 4							51.0	47 0	43.0	39.0	34.0	28.0	21.0	14 0											
		50	116						50.0	47.0	43.0	38 0	33.0	27.0	20.0	13.0												
		60	139					50.0	46.0	42.0	37 0	32.0	26.0	19 0	12.0													
SHUT-OFF PSI:			0					141	132	124	115	107	98	89	81	72	63	55	37	11								
40S75-21	7 1/2	0	0																49.0	41.0	29.0	15 0						
		20	46 2													53.0	51.0	48.0	43.0	32.0	19.0							
		30	69 3												52.0	50 0	48.0	45.0	39.0	27.0	13.0							
		40	92 4											52.0	50.0	48.0	45.0	42.0	35 0	22.0	6.0							
		50	116										52 0	50.0	47 0	44 0	41.0	38.0	30 0	16.0								
		60	139									51.0	49.0	47.0	44.0	41.0	38.0	34.0	25 0	10 0								
SHUT-OFF PSI:			0									181	172	163	155	146	137	129	111	85	59	33						
40S75-25	7 1/2	0	0																	51.0	45.0	37 0	23 0					
		20	46 2																52.0	47.0	39.0	29.0	14.0					
		30	69 3															54.0	50.0	44.0	35.0	25.0						
		40	92 4														54 0	52 0	48 0	41.0	32 0	21.0						
		50	116													53.0	52.0	50 0	45 0	38 0	28 0							
		60	139												53.0	51.0	49.0	47.0	43 0	34.0	24.0							
SHUT-OFF PSI:			0												203	194	186	177	160	134	108	82	47					
*40S100-30 40S100-30	10	0	0																		53.0	49.0	41 0	27.0				
		20	46 2																	54.0	50.0	44.0	35 0	20.0				
		30	69 3																	52.0	48 0	42.0	32.0	16.0				
		40	92 4																	51.0	46 0	39.0	28 0	12.0				
		50	116																	49.0	43 0	36.0	25.0	8.0				
		60	139																52.0	47.0	41.0	33.0	21.0					
SHUT-OFF PSI:																			222	196	170	144	110	66	23			

*** 6" Motor**

See 40S performance curves for higher head models.

SPECIFICATIONS SUBJECT TO CHANGE WITHOUT NOTICE.

60 GPM

SELECTION CHARTS
(Ratings are in GALLONS PER MINUTE-GPM)

FLOW RANGE
(40 TO 75 GPM)

PUMP OUTLET
2" NPT

PUMP MODEL	HP	PSI	DEPTH TO PUMPING WATER LEVEL (LIFT) IN FEET																								
			20	40	60	80	100	120	140	160	180	200	220	240	260	280	300	340	400	460	520	600	700	800	900	1000	1100
60S20-4	2	20	72.3	64.5	38 6	12.7	6.3																				
		30	58 6	44.9	22.4																						
		40	30 4																								
		50	17.9																								
		60																									
SHUT-OFF PSI:			46	37	29	20	11	3																			
60S30-5	3	0				74.8	66.8	58.8	34 3																		
		20	77.8	72.9	63 8	54.8	27.4																				
		30	76.0	64.3	47.3	30.0	15.0																				
		40	60.4	49.9	25.0																						
		50	40.4	19.4	9.8																						
		60	22.0																								
SHUT-OFF PSI:			60	51	42	34	25	16	8																		
60S50-7	5	0					77.5	73.8	68.4	63.1	52.2	41.3															
		20			76.3	72 4	66.6	61.1	48.3	35.8	17.9																
		30		76.0	71.3	66.5	57.8	49.2	24.6																		
		40	75.1	71.0	64 6	58.2	43.8	29.4	14.8																		
		50	69.7	64.6	54.8	44.9	22.5																				
		60	62.3	55.3	38.7	22.0	11.0																				
SHUT-OFF PSI:			88	80	71	62	54	45	36	28	19	10															
60S50-9	5	0							74.8	71.7	67.3	63.0	55.6	48 2	32 8	17.3											
		20					73.8	70.5	65.9	61.3	53.0	44.8	27.5	10.2	5.1												
		30			76.5	73.5	69.6	65 7	59.4	53.2	40.7	28.1	14 0														
		40		76.2	72 8	69.3	64.3	59.4	50.3	41.0	20.5																
		50	75.5	72.5	68 3	64.2	57.3	50.4	36.3	22.2	11.1																
		60	71.7	68.1	62.7	57.3	47.1	36.8	18.4																		
SHUT-OFF PSI:			115	106	98	89	81	72	63	55	46	37	29	20	11	3											
*60S75-13	7 1/2	0									77.3	75.4	73.1	70.7	67.8	64.8	60.7	50.0	21.5								
		20							78.8	74.8	72.3	69.9	66.8	63.8	59.3	55.0	47.9	28.9									
		30						76.6	74.3	72.1	69.3	66.6	62.8	59.2	53.3	47.7	38.2	14.3									
		40					76.2	74.1	71.6	69.1	65.8	62 7	57.9	53 3	45.6	37.9	25.0	6.0									
		50				75 9	73.6	71.3	68.4	65 6	61.7	57.7	51.6	45.4	35.0	24.7	12.3										
		60			75.5	73.3	70.8	68.2	64.8	61.4	56.3	51.3	43 1	34 8	20.8	6.8											
SHUT-OFF PSI:					152	143	134	126	117	108	100	91	82	74	65	56	48	30	4								
*60S100-18	10	0													76.5	75.0	73.3	69.8	63.1	52.6	35.8						
		20											76.1	74.6	72.8	71.2	69.2	64.7	55.8	40.0	14.2						
		30										75.9	74.3	72.7	70.8	68.9	66.7	61.6	50.9	31.5							
		40									75.7	74.1	72.3	70.6	68.5	66.5	63.9	58.0	45.0	20.7							
		50								75.4	73.8	72.1	70 2	68.3	66.0	63.7	60.7	53.6	37.5	10 0							
		60							75.2	73.6	71.8	70.0	67.8	65.8	63.1	60.5	56.8	48.2	28.3								
SHUT-OFF PSI:									186	177	169	160	152	143	134	126	117	100	74	46	22						

*** 6" Motor**
SPECIFICATIONS SUBJECT TO CHANGE WITHOUT NOTICE.

75S EASY SELECTION CHART

75 GPM

SELECTION CHARTS
(Ratings are in GALLONS PER MINUTE-GPM)

FLOW RANGE
(45 TO 95 GPM)

PUMP OUTLET
2" NPT

			DEPTH TO PUMPING WATER LEVEL (LIFT) IN FEET																								
PUMP MODEL	HP	PSI	20	40	60	80	100	120	140	160	180	200	220	240	260	280	300	340	400	460	520	600	700	800	900	1000	1100
75S20-3	2	20	69.6	45 8	22.9																						
		30	38 2																								
		40	12.4																								
		50																									
		60																									
SHUT-OFF PSI:			32	23	14	6																					
75S30-5	3	0			89 8	90.2	78.8	67 6																			
		20	98.3	86 8	74.8	62 9	31.5																				
		30	85.8	74.2	51 8	29 5	14 8																				
		40	70.2	57.1	28 6																						
		50	35.3																								
		60	24.2																								
SHUT-OFF PSI:			58	49	41	32	23	15																			
75S50-8	5	0						93 3	86 5	79 6	72.0	64.5	46.9	29.4													
		20			97.4	91.3	84.7	77 5	69.4	61.3	40 3	19 4	9 8														
		30		96 9	90 1	83 3	76.3	69.3	56.3	43 1	21.6																
		40	95 5	89 1	82 3	75.4	66 5	57 5	28 8																		
		50	88 0	81 2	73.9	66 7	51.2	35 8	17.9																		
		60	80.2	73 3	63.2	53.0	26 5																				
SHUT-OFF PSI:			98	90	81	72	64	55	46	38	29	20	12	3													
*75S75-11	7 1/2	0								97 8	93 3	88 8	84 3	79 8	75.1	70 4	63.7	43 4									
		20						96 5	92.0	87.4	82.9	78 3	73 5	68 8	61 4	54 0	38 8	11.8									
		30					95 7	91 3	86 8	82.2	77 6	73.1	67.3	61.4	50.3	39 3	19.7										
		40				95.2	90 6	86 0	81 5	77.0	72.0	67 0	58 9	50.8	33.5	16.3	8.2										
		50			94 3	89.9	85.3	80 8	76.2	71.6	65.3	59 0	46 6	34.2	17.1												
		60	97.9	93 8	89.2	84 6	80 1	75.6	70.3	65.2	56.1	47.0	23.5														
SHUT-OFF PSI:			151	142	133	125	116	107	99	90	81	73	64	55	47	38	29	12									
*75S100-15	10	0											96 7	93.4	90 0	86.5	83 2	76 3	64.7	40.9							
		20									95.7	92.4	88 9	85.5	82 1	78.7	75 2	67 4	49.3	12.5							
		30								95.3	91.8	88.4	85 0	81 5	78.2	74 8	70 9	61 6	37.1								
		40						98.0	94 7	91.3	87.8	84.4	81.0	77.7	74 1	70 6	66 0	54.0	19 9								
		50					97.3	94 3	90.8	87.3	83 9	80.5	77.1	73.7	69 7	65.8	59.8	43 5									
		60				97.0	93.7	90.3	86 8	83.3	80 0	76 6	73.0	69.3	64.5	59 6	51.5	21 7									
SHUT-OFF PSI:						178	170	161	152	144	135	126	118	109	100	92	83	66	40	14							

*** 6" Motor** Performance is the same at Best Efficiency Point only, consult factory for actual performance
SPECIFICATIONS SUBJECT TO CHANGE WITHOUT NOTICE.

FLOW RANGE: 1.2 - 7 GPM **OUTLET SIZE: 1" NPT** **NOMINAL DIA. 4"**

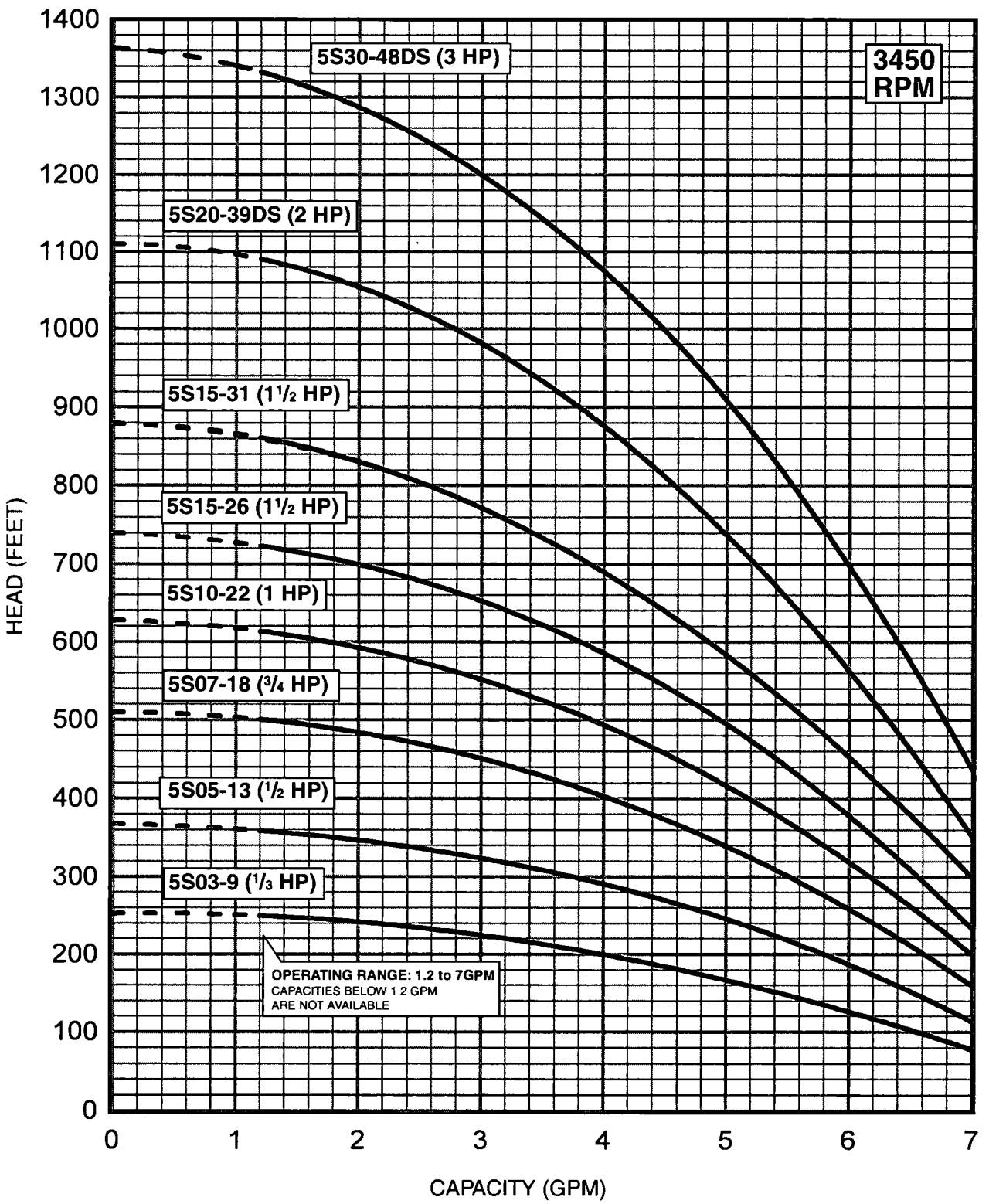

SPECIFICATIONS SUBJECT TO CHANGE WITHOUT NOTICE.
4" MOTOR STANDARD, 3450 RPM.

Performance conforms to ISO 9906. 1999 (E) Annex A
Minimum submergance is 2 feet.

DIMENSIONS AND WEIGHTS

MODEL NO.	FIG.	HP	MOTOR SIZE	DISCH. SIZE	DIMENSIONS IN INCHES A	B	C	D	E	APPROX. SHIP WT.
5S03-9	A	1/3	4"	1" NPT	22.3	8.8	13.5	3.8	3.9	27
5S05-13	A	1/2	4"	1" NPT	26.4	9.5	16.9	3.8	3.9	31
5S07-18	A	3/4	4"	1" NPT	31.7	10.7	21.0	3.8	3.9	34
5S10-22	A	1	4"	1" NPT	36.1	11.8	24.3	3.8	3.9	42
5S15-26	A	1 1/2	4"	1" NPT	41.2	13.6	27.6	3.8	3.9	46
5S15-31	A	1 1/2	4"	1" NPT	47.1	13.6	33.5	3.8	3.9	58
5S20-39DS	A	2	4"	1" NPT	55.2	15.1	40.1	3.8	3.9	65
5S30-48DS	A	3	4"	1" NPT	70.0	20.6	45.8	3.8	3.9	90

NOTES: All models suitable for use in 4" wells.
Weights include pump end with motor in lbs

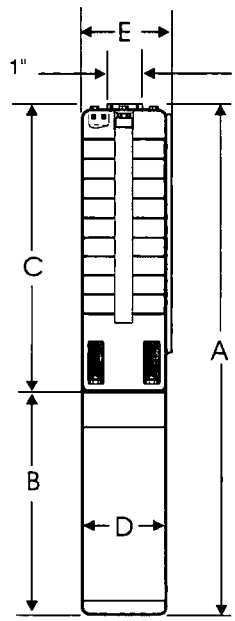

Fig. A

MATERIALS OF CONSTRUCTION

COMPONENT	SPLINED SHAFT (9-26 Stgs.)	CYLINDRICAL SHAFT (31-48 Stgs.)
Check Valve Housing	304 Stainless Steel	304 Stainless Steel
Check Valve	304 Stainless Steel	304 Stainless Steel
Diffuser Chamber	304 Stainless Steel	304 Stainless Steel
Impeller	304 Stainless Steel	304 Stainless Steel
Suction Interconnector	304 Stainless Steel	304 Stainless Steel
Inlet Screen	304 Stainless Steel	304 Stainless Steel
Pump Shaft	304 Stainless Steel	431 Stainless Steel
Straps	304 Stainless Steel	304 Stainless Steel
Cable Guard	304 Stainless Steel	304 Stainless Steel
Priming Inducer	304 Stainless Steel	316 Stainless Steel
Coupling	329/420/431 Stainless Steel	329/420/431 Stainless Steel
Check Valve Seat	NBR/304 Stainless Steel	NBR/316 Stainless Steel
Top Bearing	NBR/304 Stainless Steel	NBR/316 Stainless Steel
Impeller Seal Ring	NBR/PBT (Valox®)	NBR/PPS (Ryton®)
Intermediate Bearings	NBR	304 Stainless Steel
Shaft Washer	Not Required	LCP (Vectra®)
Split Cone	Not Required	304 Stainless Steel
Split Cone Nut	Not Required	316 Stainless Steel

NOTES: Specifications subject to change without notice.
Valox® is a registered trademark of General Electric Co.
Vectra® is a registered trademark of Hoechast Calanese Corporation.
Ryton® is a registered trademark of Phillips 66.

FLOW RANGE: 3 -10 GPM **OUTLET SIZE: 1" NPT** **NOMINAL DIA. 4"**

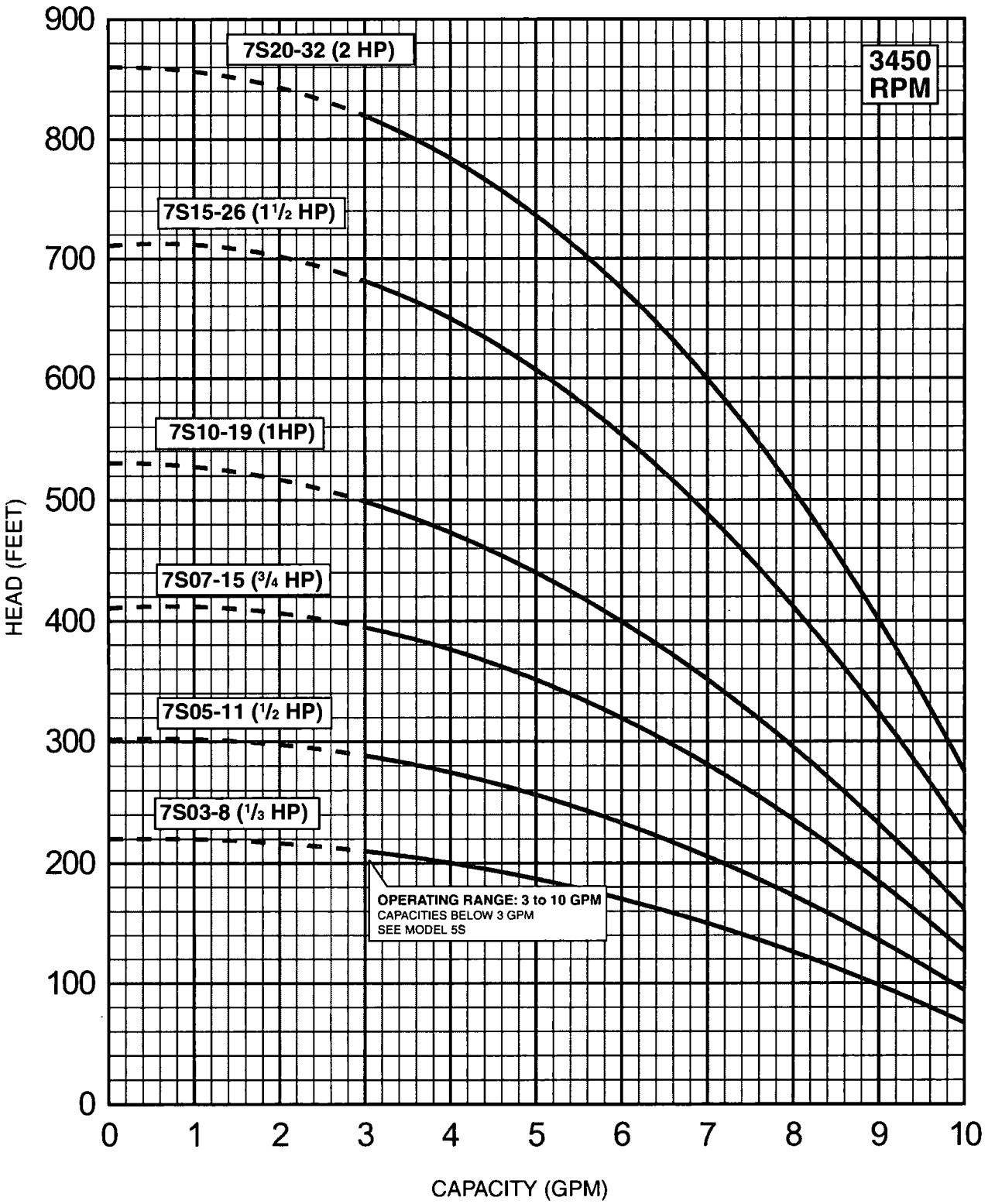

SPECIFICATIONS SUBJECT TO CHANGE WITHOUT NOTICE.
4" MOTOR STANDARD, 3450 RPM.

Performance conforms to ISO 9906. 1999 (E) Annex A
Minimum submergance is 2 feet.

DIMENSIONS AND WEIGHTS

MODEL NO.	FIG.	HP	MOTOR SIZE	DISCH. SIZE	DIMENSIONS IN INCHES					APPROX. SHIP WT.
					A	B	C	D	E	
7S03-8	A	1/3	4"	1" NPT	21.5	8.8	12.7	3.8	3.9	27
7S05-11	A	1/2	4"	1" NPT	24.7	9.5	15.2	3.8	3.9	30
7S07-15	A	3/4	4"	1" NPT	29.2	10.7	18.5	3.8	3.9	33
7S10-19	A	1	4"	1" NPT	33.6	11.8	21.8	3.8	3.9	36
7S15-26	A	1 1/2	4"	1" NPT	41.2	13.6	27.6	3.8	3.9	46
7S20-32	A	2	4"	1" NPT	48.5	14.0	34.5	3.8	3.9	59

NOTES: All models suitable for use in 4" wells.
Weights include pump end with motor in lbs.

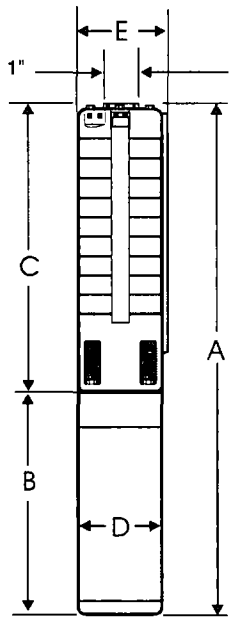

Fig. A

MATERIALS OF CONSTRUCTION

COMPONENT	SPLINE SHAFT
Check Valve Housing	304 Stainless Steel
Check Valve	304 Stainless Steel
Diffuser Chamber	304 Stainless Steel
Impeller	304 Stainless Steel
Suction Interconnector	304 Stainless Steel
Inlet Screen	304 Stainless Steel
Pump Shaft	304 Stainless Steel
Straps	304 Stainless Steel
Cable Guard	304 Stainless Steel
Priming Inducer	304 Stainless Steel
Coupling	316/431 Stainless Steel
Check Valve Seat	NBR/304 Stainless Steel
Top Bearing	NBR
Impeller Seal Ring	NBR/PBT (Valox ®)
Intermediate Bearings	NBR

NOTES. Specifications subject to change without notice.
Valox® is a registered trademark of General Electric Co.

FLOW RANGE: 5 -14 GPM **OUTLET SIZE: 1¼ " NPT** **NOMINAL DIA. 4"**

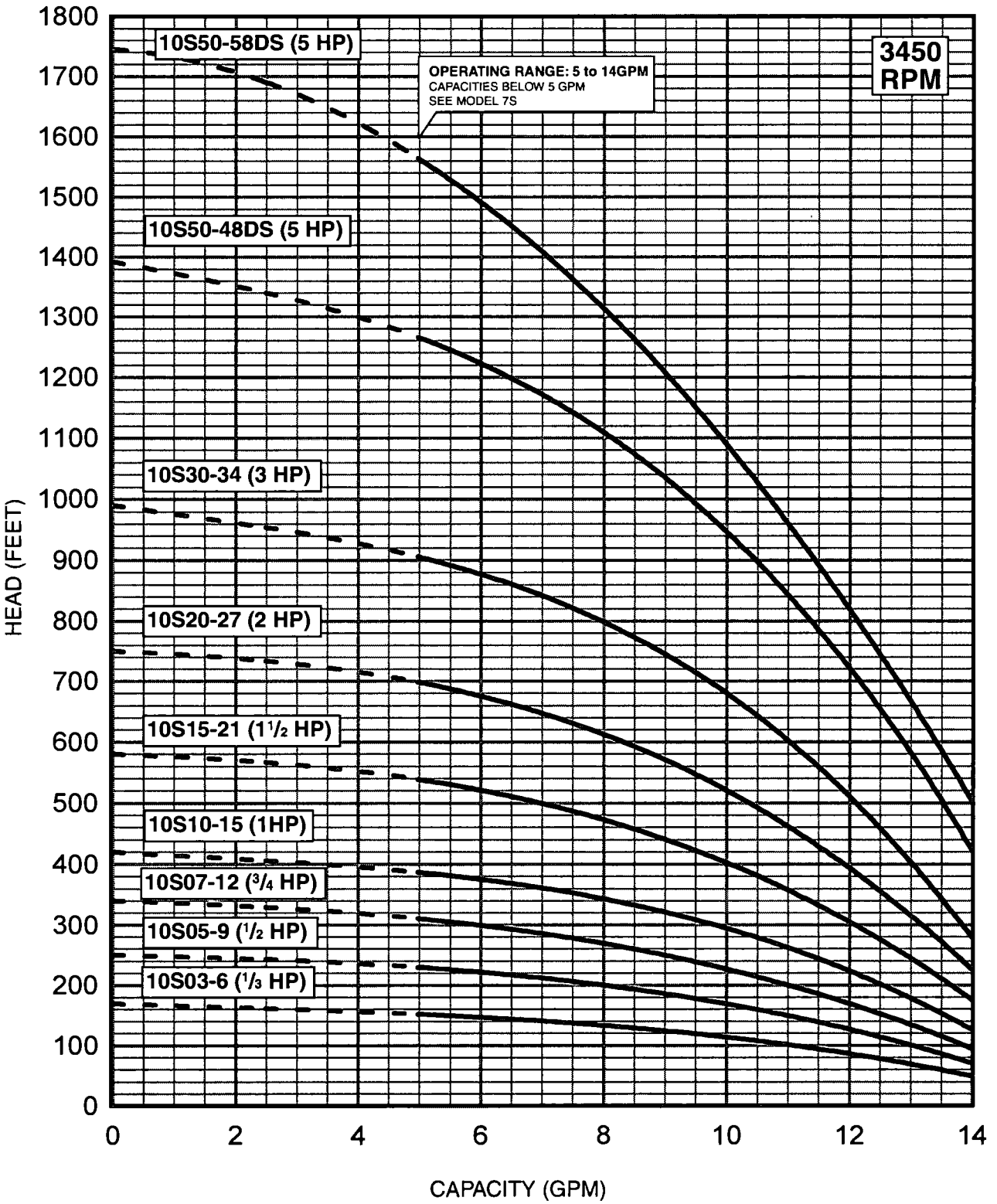

SPECIFICATIONS SUBJECT TO CHANGE WITHOUT NOTICE.
4" MOTOR STANDARD, 3450 RPM.

Performance conforms to ISO 9906. 1999 (E) Annex A
Minimum submergance is 2 feet.

DIMENSIONS AND WEIGHTS

MODEL NO.	FIG.	HP	MOTOR SIZE	DISCH. SIZE	DIMENSIONS IN INCHES A	B	C	D	E	APPROX. SHIP WT.
10S03-6	A	1/3	4"	1 1/4" NPT	19.9	8.8	11.1	3.8	3.9	26
10S05-9	A	1/2	4"	1 1/4" NPT	23.0	9.5	13.5	3.8	3.9	29
10S07-12	A	3/4	4"	1 1/4" NPT	26.7	10.7	16.0	3.8	3.9	32
10S10-15	A	1	4"	1 1/4" NPT	30.3	11.8	18.5	3.8	3.9	34
10S15-21	A	1 1/2	4"	1 1/4" NPT	37.1	13.6	23.5	3.8	3.9	44
10S20-27	A	2	4"	1 1/4" NPT	43.5	15.1	28.4	3.8	3.9	49
10S30-34	A	3	4"	1 1/4" NPT	54.7	20.6	34.1	3.8	3.9	83
10S50-48DS	A	5	4"	1 1/4" NPT	71.3	23.6	47.7	3.8	3.9	115
10S50-58DS*	B	5	4"	1 1/4" MPT	88.2	23.6	64.5	3.8	4.3	142

NOTES: All models suitable for use in 4" wells, unless otherwise noted.
Weights include pump end with motor in lbs.
* Built into sleeve 1¼" MPT discharge, 5" min well dia

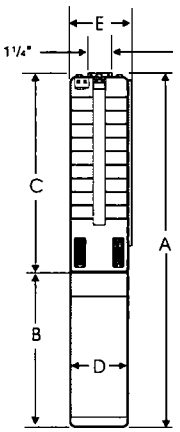

Fig. A

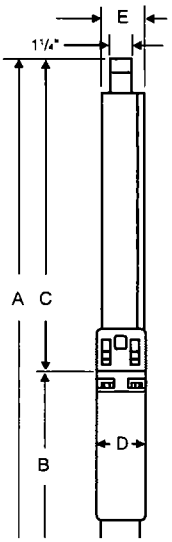

Fig. B

MATERIALS OF CONSTRUCTION

COMPONENT	SPLINED SHAFT (6-27 Stgs.)	CYLINDRICAL SHAFT (34-48 Stgs.)	DEEP SET (58 Stgs.)
Check Valve Housing	304 Stainless Steel	304 Stainless Steel	304 Stainless Steel
Check Valve	304 Stainless Steel	304 Stainless Steel	304 Stainless Steel
Diffuser Chamber	304 Stainless Steel	304 Stainless Steel	304 Stainless Steel
Impeller	304 Stainless Steel	304 Stainless Steel	304 Stainless Steel
Suction Interconnector	304 Stainless Steel	304 Stainless Steel	304 Stainless Steel
Inlet Screen	304 Stainless Steel	304 Stainless Steel	304 Stainless Steel
Pump Shaft	304 Stainless Steel	431 Stainless Steel	431 Stainless Steel
Straps	304 Stainless Steel	304 Stainless Steel	304 Stainless Steel
Cable Guard	304 Stainless Steel	304 Stainless Steel	304 Stainless Steel
Priming Inducer	304 Stainless Steel	304 Stainless Steel	304 Stainless Steel
Coupling	316/431 Stainless Steel	316/431 Stainless Steel	316/431 Stainless Steel
Check Valve Seat	NBR/304 Stainless Steel	NBR/316 Stainless Steel	NBR/316 Stainless Steel
Top Bearing	NBR	NBR/316 Stainless Steel	NBR/316 Stainless Steel
Impeller Seal Ring	NBR/PBT (Valox®)	NBR/PPS (Ryton®)	NBR/PPS (Ryton®)
Intermediate Bearings	NBR	304 Stainless Steel	NBR/316 Stainless Steel
Shaft Washer	Not Required	LCP (Vectra®)	LCP (Vectra®)
Split Cone	Not Required	304 Stainless Steel	304 Stainless Steel
Split Cone Nut	Not Required	316 Stainless Steel	304 Stainless Steel
Sleeve	Not Required	Not Required	316 Stainless Steel
Sleeve Flange	Not Required	Not Required	Zincless Bronze*

NOTES: Specifications subject to change without notice.
Valox® is a registered trademark of General Electric Co.
Vectra® is a registered trademark of Hoechast Calanese Corporation
Ryton® is a registered trademark of Phillips 66.
*** Stainless Steel option available.**

FLOW RANGE: 10 -20 GPM **OUTLET SIZE: 1¼ " NPT** **NOMINAL DIA. 4"**

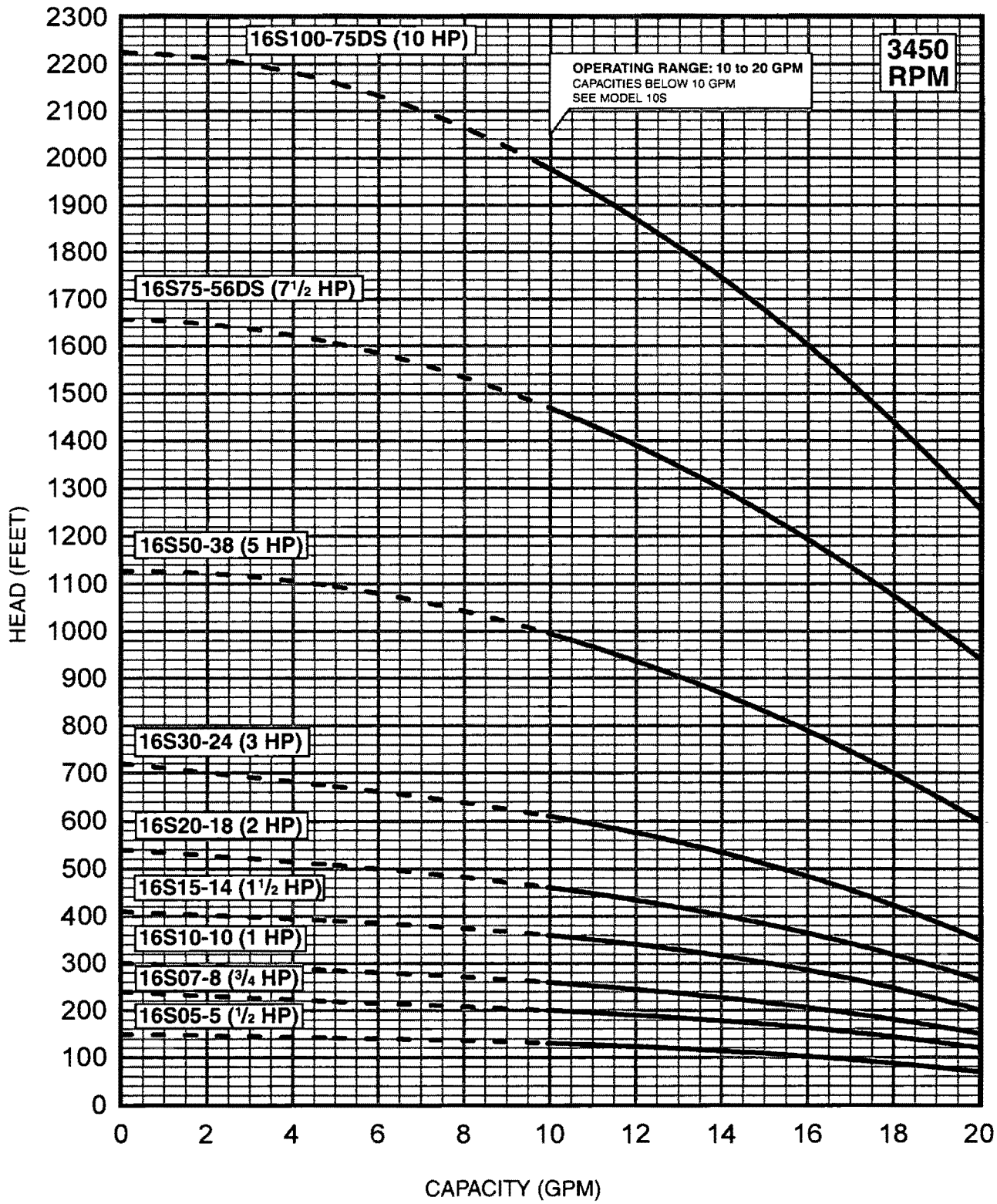

SPECIFICATIONS SUBJECT TO CHANGE WITHOUT NOTICE.
4" MOTOR STANDARD, .5 -5 HP/3450 RPM.
6" MOTOR STANDARD,7.5 -10HP/3450 RPM.

Performance conforms to ISO 9906. 1999 (E) Annex A
Minimum submergance is 2 feet

DIMENSIONS AND WEIGHTS

MODEL NO.	FIG.	HP	MOTOR SIZE	DISCH. SIZE	DIMENSIONS IN INCHES					APPROX. SHIP WT.
					A	B	C	D	E	
16S05-5	A	1/2	4"	1 1/4" NPT	19.7	9.5	10.2	3.8	3.9	27
16S07-8	A	3/4	4"	1 1/4" NPT	23.4	10.7	12.7	3.8	3.9	29
16S10-10	A	1	4"	1 1/4" NPT	26.2	11.8	14.4	3.8	3.9	32
16S15-14	A	1 1/2	4"	1 1/4" NPT	32.8	15.1	17.7	3.8	3.9	36
16S20-18	A	2	4"	1 1/4" NPT	36.0	15.1	20.9	3.8	3.9	40
16S30-24	A	3	4"	1 1/4" NPT	46.5	20.6	25.9	3.8	3.9	64
16S50-38	A	5	4"	1 1/4" NPT	61.1	23.6	37.5	3.8	3.9	94
16S75-56DS*	B	7 1/2	6"	1 1/4" MPT	93.0	24.2	68.8	5.4	4.6	220
16S100-75DS*	B	10	6"	1 1/4" MPT	109.9	25.4	84.5	5.4	4.6	245

NOTES: All models suitable for use in 4" wells, unless otherwise noted
Weights include pump end with motor in lbs..
* Built into sleeve 1¼" MPT discharge, 6" min. well dia.

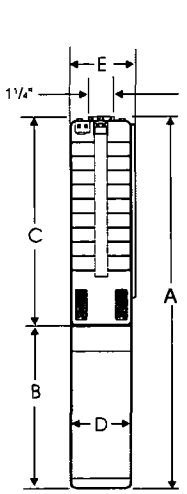

Fig. A

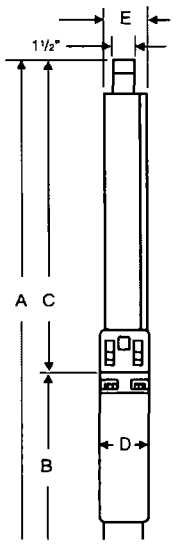

Fig. B

MATERIALS OF CONSTRUCTION

COMPONENT	SPLINED SHAFT (5-24 Stgs.)	CYLINDRICAL SHAFT (38 Stgs.)	DEEP SET (56-75 Stgs)
Check Valve Housing	304 Stainless Steel	304 Stainless Steel	304 Stainless Steel
Check Valve	304 Stainless Steel	304 Stainless Steel	304 Stainless Steel
Diffuser Chamber	304 Stainless Steel	304 Stainless Steel	304 Stainless Steel
Impeller	304 Stainless Steel	304 Stainless Steel	304 Stainless Steel
Suction Interconnector	304 Stainless Steel	304 Stainless Steel	304 Stainless Steel
Inlet Screen	304 Stainless Steel	304 Stainless Steel	304 Stainless Steel
Pump Shaft	304 Stainless Steel	431 Stainless Steel	431 Stainless Steel
Straps	304 Stainless Steel	304 Stainless Steel	304 Stainless Steel
Cable Guard	304 Stainless Steel	304 Stainless Steel	304 Stainless Steel
Priming Inducer	304 Stainless Steel	304 Stainless Steel	304 Stainless Steel
Coupling	316/431 Stainless Steel	316/431 Stainless Steel	329/416 Stainless Steel**
Check Valve Seat	NBR/304 Stainless Steel	NBR/316 Stainless Steel	NBR/316 Stainless Steel
Top Bearing	NBR	NBR/316 Stainless Steel	NBR/316 Stainless Steel
Impeller Seal Ring	NBR/PBT (Valox®)	NBR/PPS (Ryton®)	NBR/PPS (Ryton®)
Intermediate Bearings	NBR	304 Stainless Steel	NBR/316 Stainless Steel
Shaft Washer	Not Required	LCP (Vectra®)	LCP (Vectra®)
Split Cone	Not Required	304 Stainless Steel	304 Stainless Steel
Split Cone Nut	Not Required	316 Stainless Steel	304 Stainless Steel
Sleeve	Not Required	Not Required	316 Stainless Steel
Sleeve Flange	Not Required	Not Required	304 Stainless Steel
Coupling Key	Not Required	Not Required	302/304 Stainless Steel**

NOTES: Specifications are subject to change without notice.
Valox® is a registered trademark of General Electric Co.
Vectra® is a registered trademark of Hoechast Calanese Corporation.
Ryton® is a registered trademark of Phillips 66.
***Stainless Steel option available.**
** If using 4" non-standard motors, refer to 329/420/431 Stainless Steel for coupling.
A coupling key is not required.

FLOW RANGE: 18 -32 GPM **OUTLET SIZE: 1½ " NPT** **NOMINAL DIA. 4"**

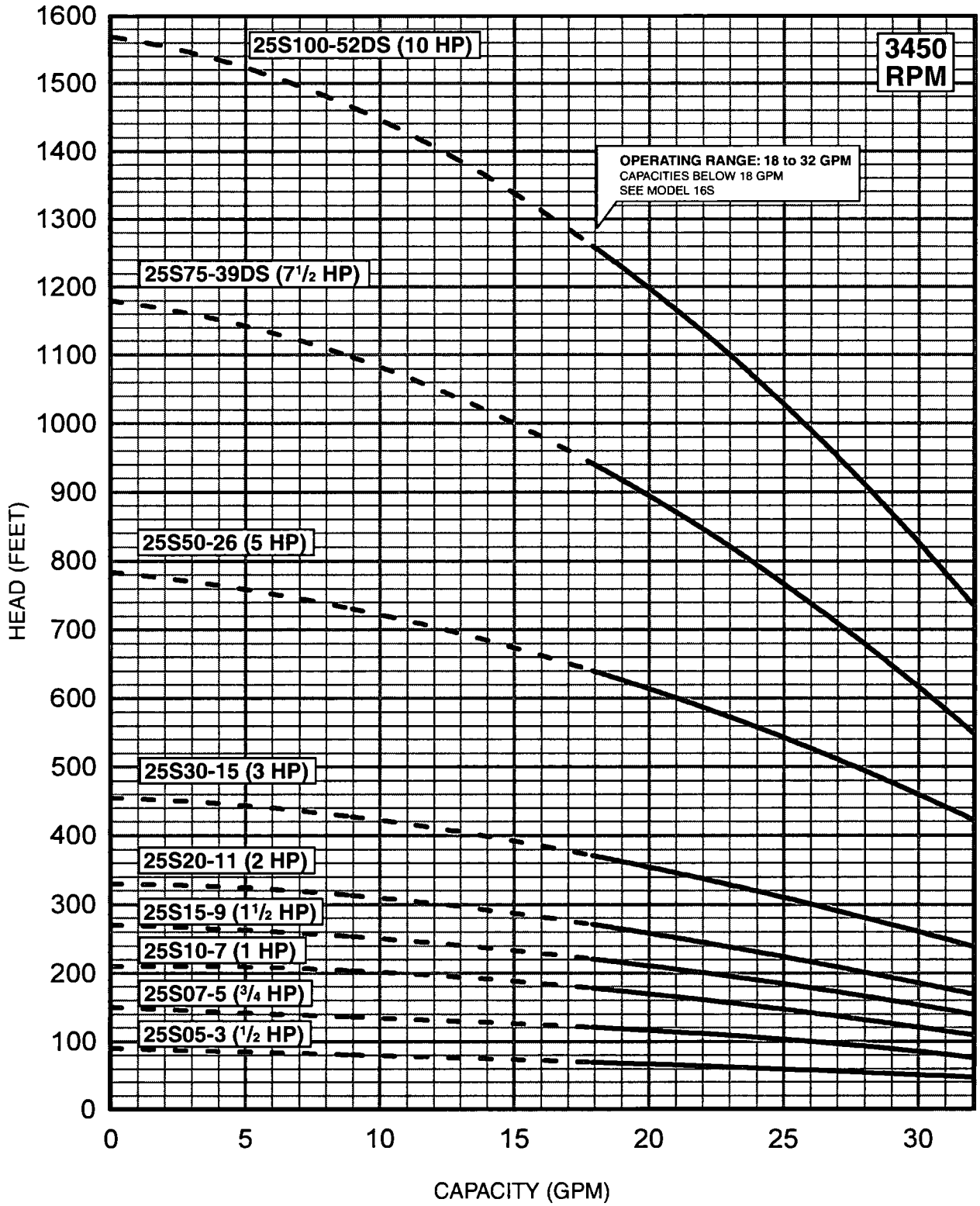

SPECIFICATIONS SUBJECT TO CHANGE WITHOUT NOTICE.
4" MOTOR STANDARD, .5 -5 HP/3450 RPM.
6" MOTOR STANDARD,7.5 -10HP/3450 RPM.

Performance conforms to ISO 9906. 1999 (E) Annex A
Minimum submergance is 2 feet.

DIMENSIONS AND WEIGHTS

MODEL NO.	FIG.	HP	MOTOR SIZE	DISCH. SIZE	DIMENSIONS IN INCHES					APPROX. SHIP WT.
					A	B	C	D	E	
25S05-3	A	1/2	4"	1 1/2" NPT	18.1	9.5	8.6	3.8	3.9	26
25S07-5	A	3/4	4"	1 1/2" NPT	20.9	10.7	10.2	3.8	3.9	28
25S10-7	A	1	4"	1 1/2" NPT	23.7	11.8	11.9	3.8	3.9	29
25S15-9	A	1 1/2	4"	1 1/2" NPT	27.1	13.6	13.5	3.8	3.9	34
25S20-11	A	2	4"	1 1/2" NPT	30.3	15.1	15.2	3.8	3.9	37
25S30-15	A	3	4"	1 1/2" NPT	39.1	20.6	18.5	3.8	3.9	59
25S50-26	A	5	4"	1 1/2" NPT	51.2	23.6	27.6	3.8	3.9	76
25S75-39DS	A	7 1/2	6"	1 1/2" NPT	66.8	24.2	42.6	5.4	4.6	168
25S100-52DS*	B	10	6"	1 1/2" MPT	90.9	25.4	65.5	5.4	5.4	226

NOTES All models suitable for use in 4" wells, unless otherwise noted.
Weights include pump end with motor in lbs.
* Built into sleeve 1½" MPT discharge, 6" min. well dia.

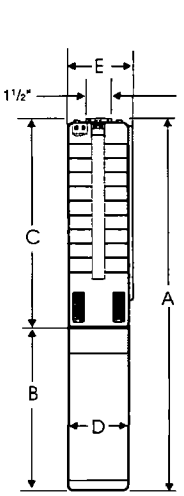

Fig. A

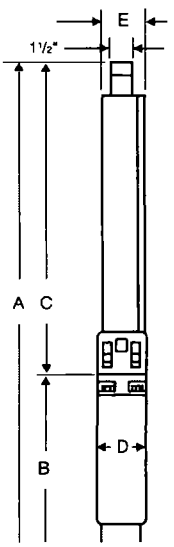

Fig. B

MATERIALS OF CONSTRUCTION

COMPONENT	SPLINED SHAFT (3-26 Stgs.)	CYLINDRICAL SHAFT (39 Stgs.)	DEEP SET (52 Stgs)
Check Valve Housing	304 Stainless Steel	304 Stainless Steel	304 Stainless Steel
Check Valve	304 Stainless Steel	304 Stainless Steel	304 Stainless Steel
Diffuser Chamber	304 Stainless Steel	304 Stainless Steel	304 Stainless Steel
Impeller	304 Stainless Steel	304 Stainless Steel	304 Stainless Steel
Suction Interconnector	304 Stainless Steel	304 Stainless Steel	304 Stainless Steel
Inlet Screen	304 Stainless Steel	304 Stainless Steel	304 Stainless Steel
Pump Shaft	304 Stainless Steel	431 Stainless Steel	431 Stainless Steel
Straps	304 Stainless Steel	304 Stainless Steel	304 Stainless Steel
Cable Guard	304 Stainless Steel	304 Stainless Steel	304 Stainless Steel
Priming Inducer	304 Stainless Steel	304 Stainless Steel	304 Stainless Steel
Coupling	316/431 Stainless Steel	316/431 Stainless Steel	329/416 Stainless Steel**
Check Valve Seat	NBR/304 Stainless Steel	NBR/316 Stainless Steel	NBR/316 Stainless Steel
Top Bearing	NBR	NBR/316 Stainless Steel	NBR/316 Stainless Steel
Impeller Seal Ring	NBR/PBT (Valox®)	NBR/PPS (Ryton®)	NBR/PPS (Ryton®)
Intermediate Bearings	NBR	304 Stainless Steel	NBR/316 Stainless Steel
Shaft Washer	Not Required	LCP (Vectra®)	LCP (Vectra®)
Split Cone	Not Required	304 Stainless Steel	304 Stainless Steel
Split Cone Nut	Not Required	316 Stainless Steel	304 Stainless Steel
Sleeve	Not Required	Not Required	316 Stainless Steel
Sleeve Flange	Not Required	Not Required	304 Stainless Steel
Coupling Key	Not Required	Not Required	302/304 Stainless Steel**

NOTES: Specifications are subject to change without notice.
Valox® is a registered trademark of General Electric Co.
Vectra® is a registered trademark of Hoechast Calanese Corporation.
Ryton® is a registered trademark of Phillips 66.
***Stainless Steel option available.**
** If using 4" non-standard motors, refer to 329/420/431 Stainless Steel for coupling. A coupling key is not required.

FLOW RANGE: 24 - 55 GPM **OUTLET SIZE: 2 " NPT** **NOMINAL DIA. 4"**

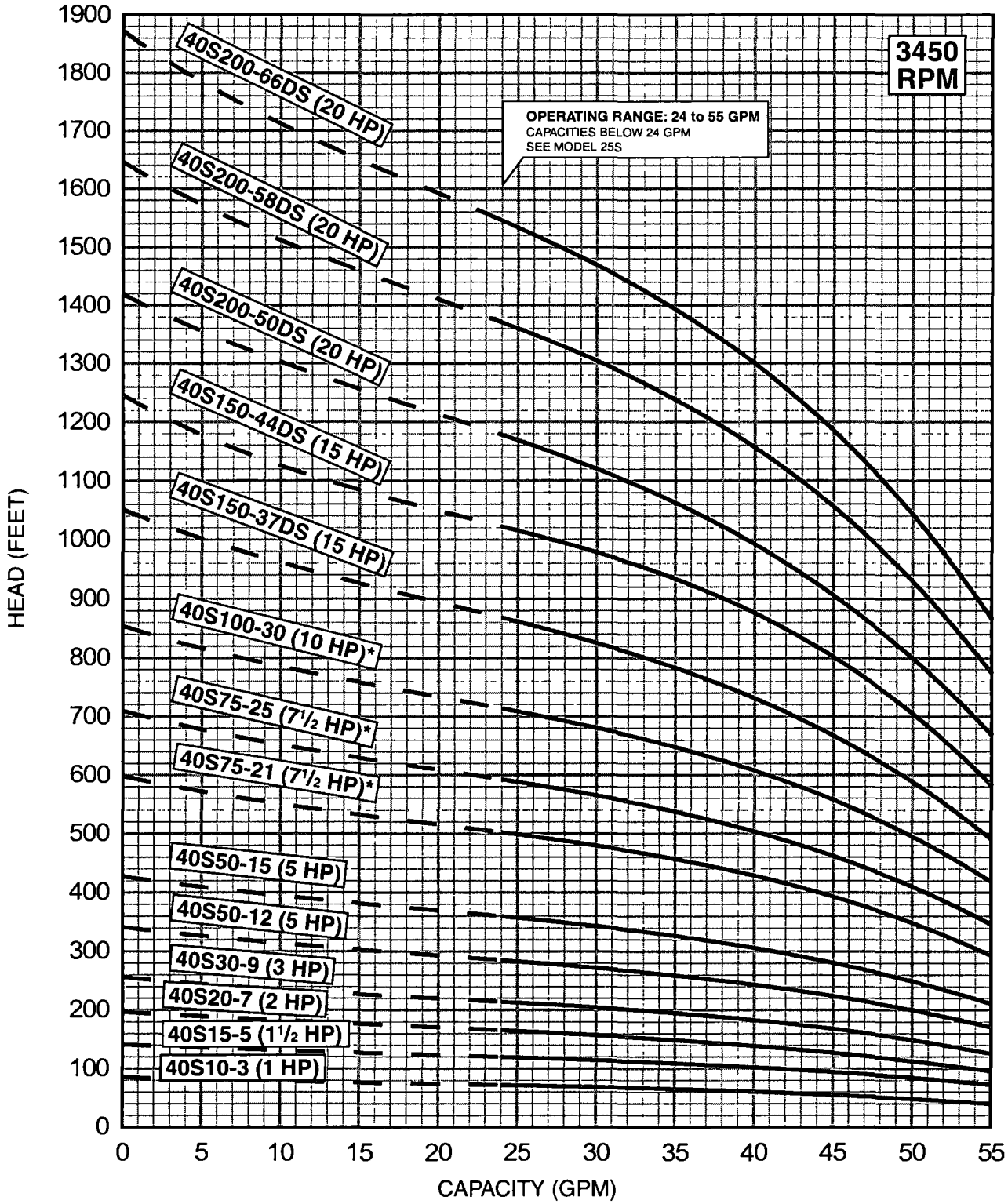

SPECIFICATIONS SUBJECT TO CHANGE WITHOUT NOTICE.
4" MOTOR STANDARD, 1-10 HP/3450 RPM.
6" MOTOR STANDARD,15-20 HP/3450 RPM.
* Also available with 6" motor.

Performance conforms to ISO 9906. 1999 (E) Annex A
Minimum submergance is 5 feet.

DIMENSIONS AND WEIGHTS

MODEL NO.	FIG.	HP	MOTOR SIZE	DISCH. SIZE	DIMENSIONS IN INCHES					APPROX. SHIP WT.
					A	B	C	D	E	
40S10-3	A	1	4"	2" NPT	24.6	11.8	12.8	3.8	3.9	32
40S15-5	A	1 1/2	4"	2" NPT	29.7	13.6	16.1	3.8	3.9	37
40S20-7	A	2	4"	2" NPT	34.5	15.1	19.4	3.8	3.9	41
40S30-9	A	3	4"	2" NPT	43.3	20.6	22.7	3.8	3.9	65
40S50-12	A	5	4"	2" NPT	51.3	23.6	27.7	3.8	3.9	78
40S50-15	A	5	4"	2" NPT	56.2	23.6	32.6	3.8	3.9	84
40S75-21*	A	7 1/2	4"	2" NPT	74.6	29.6	45.0	3.8	3.9	120
40S75-25*	A	7 1/2	4"	2" NPT	81.2	29.6	51.6	3.8	3.9	124
40S100-30*	A	10	4"	2" NPT	103.7	43.9	59.8	3.8	3.9	181
40S150-37DS	A	15	6"	2" NPT	99.5	28.0	71.5	5.4	5.4	244
40S150-44DS	A	15	6"	2" NPT	111.0	28.0	83.0	5.4	5.4	340
40S200-50DS**	B	20	6"	2" MPT	136.0	30.6	105.4	5.4	5.5	319
40S200-58DS**	B	20	6"	2" MPT	149.2	30.6	118.6	5.4	5.5	334
40S200-66DS**	B	20	6"	2" MPT	162.4	30.6	131.8	5.4	5.5	394

NOTES: All models suitable for use in 4" wells, unless otherwise noted.
Weights include pump end with motor in lbs.
* Also available with 6" motor.
** Built into sleeve 2" MPT discharge, 6" min. well dia.

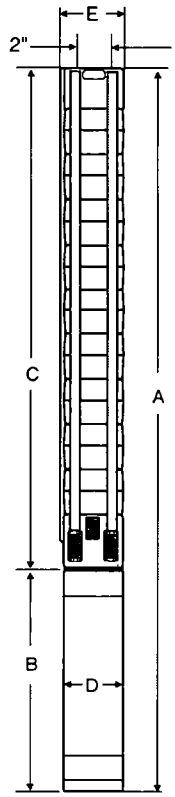

Fig. A

MATERIALS OF CONSTRUCTION

COMPONENT	CYLINDRICAL SHAFT (3-44 Stgs.)	DEEP SET (50-66 Stgs.)
Check Valve Housing	304 Stainless Steel	304 Stainless Steel
Check Valve	304 Stainless Steel	304 Stainless Steel
Diffuser Chamber	304 Stainless Steel	304 Stainless Steel
Impeller	304 Stainless Steel	304 Stainless Steel
Suction Interconnector	304 Stainless Steel	304 Stainless Steel
Inlet Screen	304 Stainless Steel	304 Stainless Steel
Pump Shaft	431 Stainless Steel	431 Stainless Steel
Straps	304 Stainless Steel	304 Stainless Steel
Cable Guard	304 Stainless Steel	304 Stainless Steel
Priming Inducer	304 Stainless Steel	304 Stainless Steel
Coupling	316/431 Stainless Steel **	329/416 Stainless Steel
Check Valve Seat	NBR/316 Stainless Steel	NBR/316 Stainless Steel
Top Bearing	NBR/316 Stainless Steel	NBR/316 Stainless Steel
Impeller Seal Ring	NBR/316 Stainless Steel	NBR/316 Stainless Steel
Intermediate Bearings	NBR/316 Stainless Steel	NBR/316 Stainless Steel
Shaft Washer	LCP (Vectra®)	LCP (Vectra®)
Split Cone	304 Stainless Steel	304 Stainless Steel
Split Cone Nut	304 Stainless Steel	304 Stainless Steel
Sleeve	Not Required	316 Stainless Steel
Sleeve Flange	Not Required	304 Stainless Steel

NOTES: Specifications are subject to change without notice.
Vectra® is a registered trademark of Hoechast Calanese Corporation.
***Stainless Steel option available.**

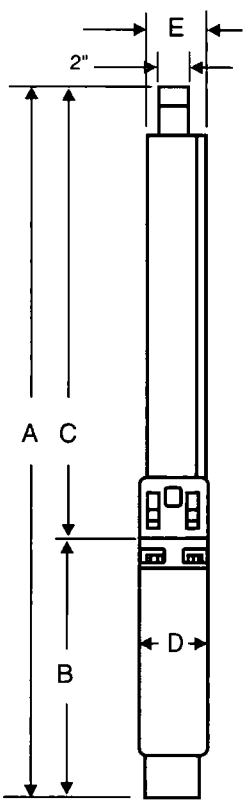

Fig. B

FLOW RANGE: 40 -75 GPM **OUTLET SIZE: 2 " NPT** **NOMINAL DIA. 4"**

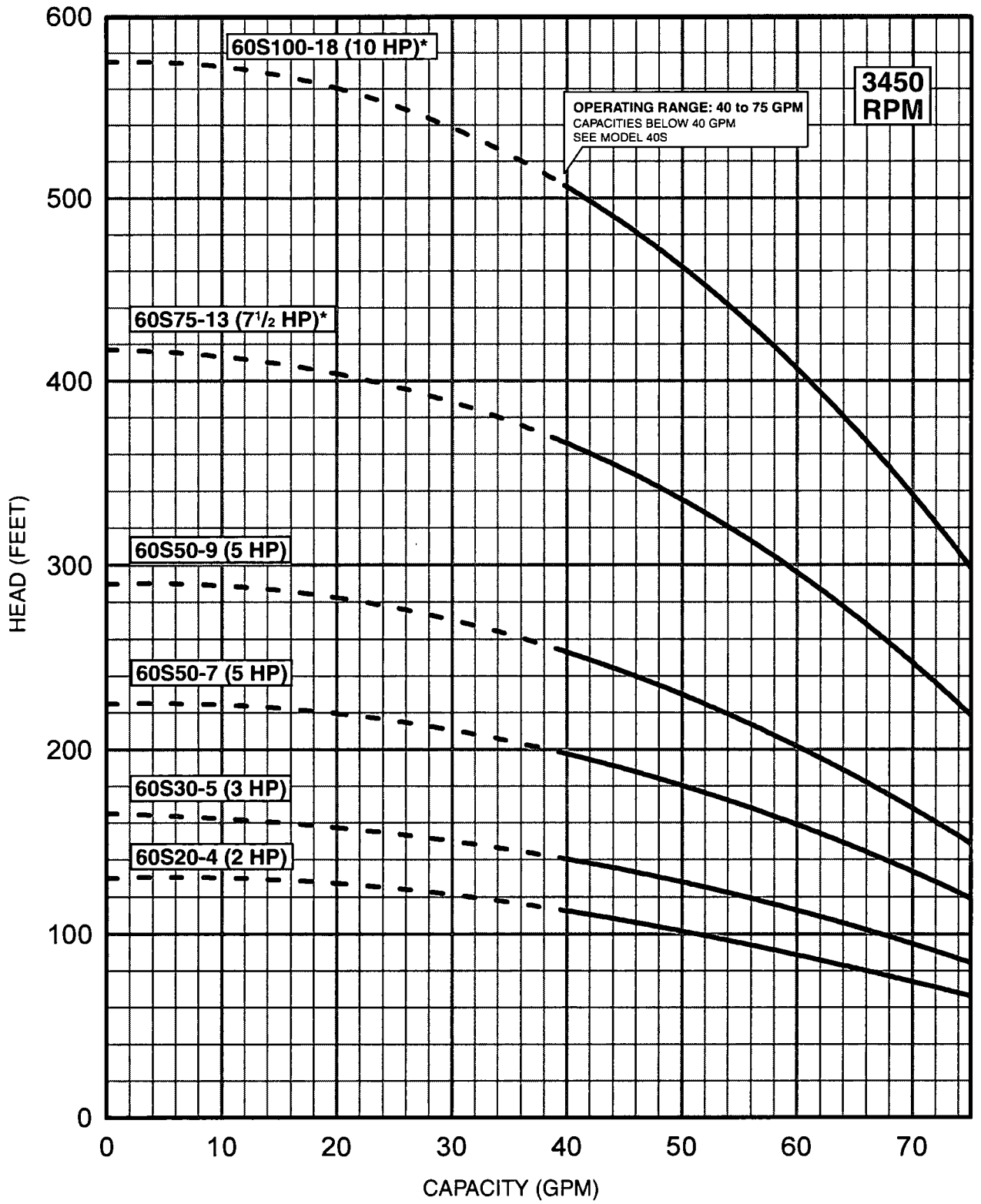

SPECIFICATIONS SUBJECT TO CHANGE WITHOUT NOTICE.
4" MOTOR STANDARD, 3450 RPM.
* Also available with 6" motor.

Performance conforms to ISO 9906. 1999 (E) Annex A
Minimum submergance is 5 feet.

DIMENSIONS AND WEIGHTS

MODEL NO.	FIG.	HP	MOTOR SIZE	DISCH. SIZE	DIMENSIONS IN INCHES					APPROX. SHIP WT.
					A	B	C	D	E	
60S20-4	A	2	4"	2" NPT	32.6	15.1	17.5	3.8	3.9	39
60S30-5	A	3	4"	2" NPT	40.7	20.6	20.1	3.8	3.9	64
60S50-7	A	5	4"	2" NPT	48.8	23.6	25.2	3.8	3.9	75
60S50-9	A	5	4"	2" NPT	53.9	23.6	30.3	3.8	3.9	80
60S75-13*	A	7 1/2	4"	2" NPT	70.1	29.6	40.5	3.8	3.9	105
60S100-18*	A	10	4"	2" NPT	97.3	43.9	53.4	3.8	3.9	160

NOTES: All models suitable for use in 4" wells, unless otherwise noted.
Weights include pump end with motor in lbs .
* Also available with 6" motor.

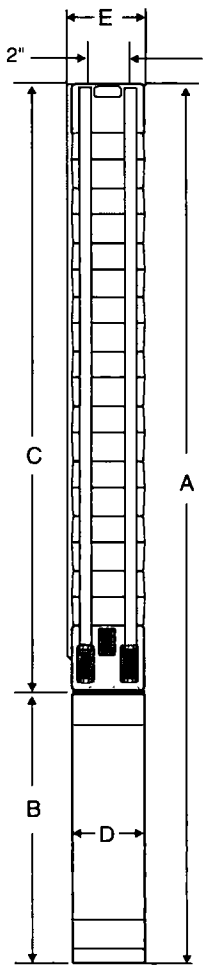

Fig. A

MATERIALS OF CONSTRUCTION

COMPONENT	CYLINDRICAL SHAFT (4-18 Stgs.)
Check Valve Housing	304 Stainless Steel
Check Valve	304 Stainless Steel
Diffuser Chamber	304 Stainless Steel
Impeller	304 Stainless Steel
Suction Interconnector	304 Stainless Steel
Inlet Screen	304 Stainless Steel
Pump Shaft	431 Stainless Steel
Straps	304 Stainless Steel
Cable Guard	304 Stainless Steel
Priming Inducer	304 Stainless Steel
Coupling	316/431 Stainless Steel**
Check Valve Seat	NBR/316 Stainless Steel
Top Bearing	NBR/316 Stainless Steel
Impeller Seal Ring	NBR/316 Stainless Steel
Intermediate Bearings	NBR/316 Stainless Steel
Shaft Washer	LCP (Vectra®)
Split Cone	304 Stainless Steel
Split Cone Nut	304 Stainless Steel

NOTES: Specifications are subject to change without notice
Vectra® is a registered trademark of Hoechast Calanese Corporation.

FLOW RANGE: 45 - 95 GPM **OUTLET SIZE: 2" NPT** **NOMINAL DIA.: 4"**

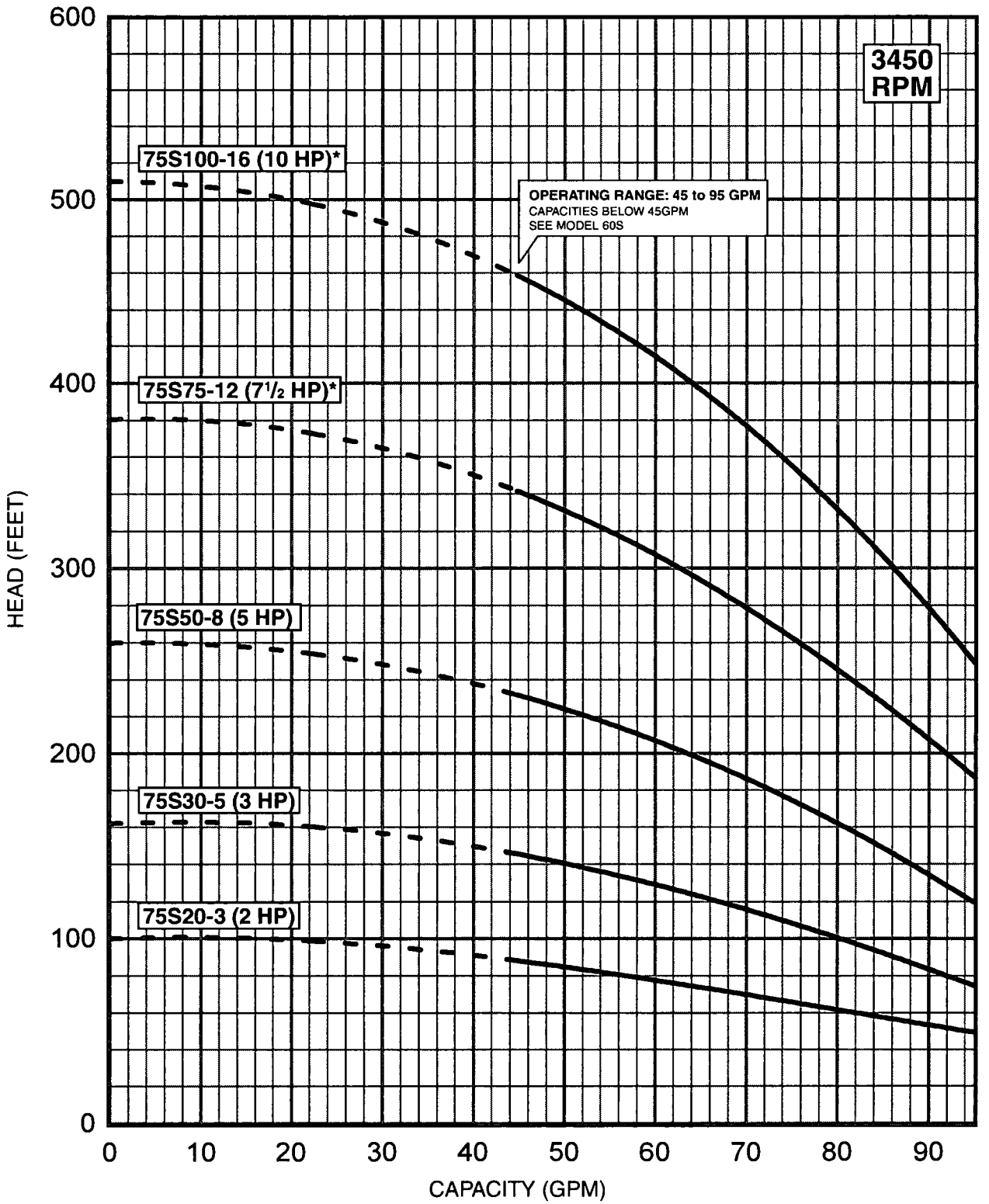

SPECIFICATIONS SUBJECT TO CHANGE WITHOUT NOTICE.
4" MOTOR STANDARD,2-10 Hp 3450 RPM.
* Also available with 6" motor, performance is the same only at Best Effeciency point.
Consult factory for actual performance.

Performance conforms to ISO 9906. 1999 (E) Annex
Minimum submergance is 5 feet.

DIMENSIONS AND WEIGHTS

MODEL NO.	FIG.	HP	MOTOR SIZE	DISCH. SIZE	DIMENSIONS IN INCHES					APPROX. SHIP WT.
					A	B	C	D	E	
75S20-3	A	2	4"	2" NPT	30.0	15.1	14.9	3.8	3.9	38
75S30-5	A	3	4"	2" NPT	40.7	20.6	20.1	3.8	3.9	64
75S50-8	A	5	4"	2" NPT	51.4	23.6	27.8	3.8	3.9	78
75S75-12*	A	7 1/2	4"	2" NPT	67.5	29.6	37.9	3.8	3.9	100
75S100-16*	A	10	4"	2" NPT	92.1	43.9	48.2	3.8	3.9	155

NOTES: All models suitable for use in 4" wells, unless otherwise noted.
Weights include pump end with motor in lbs.
* Also available with 6" motor, performance is the same only at Best Efficiency point. Consult factory for actual performance.

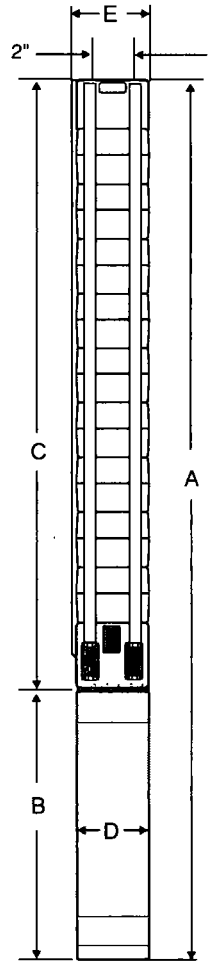

Fig. A

MATERIALS OF CONSTRUCTION

COMPONENT	CYLINDRICAL SHAFT (3-16 Stgs.)
Check Valve Housing	304 Stainless Steel
Check Valve	304 Stainless Steel
Diffuser Chamber	304 Stainless Steel
Impeller	304 Stainless Steel
Suction Interconnector	304 Stainless Steel
Inlet Screen	304 Stainless Steel
Pump Shaft	431 Stainless Steel
Straps	304 Stainless Steel
Cable Guard	304 Stainless Steel
Priming Inducer	304 Stainless Steel
Coupling	316/431 Stainless Steel**
Check Valve Seat	NBR/316 Stainless Steel
Top Bearing	NBR/316 Stainless Steel
Impeller Seal Ring	NBR/316 Stainless Steel
Intermediate Bearings	NBR/316 Stainless Steel
Shaft Washer	LCP (Vectra®)
Split Cone	304 Stainless Steel
Split Cone Nut	304 Stainless Steel

NOTES: Specifications are subject to change without notice.
Vectra® is a registered trademark of Hoechast Calanese Corporation.

GRUNDFOS **INSTRUCTIONS**

GRUNDFOS Control Box SA-SPM5

(US) Installation and operating instructions

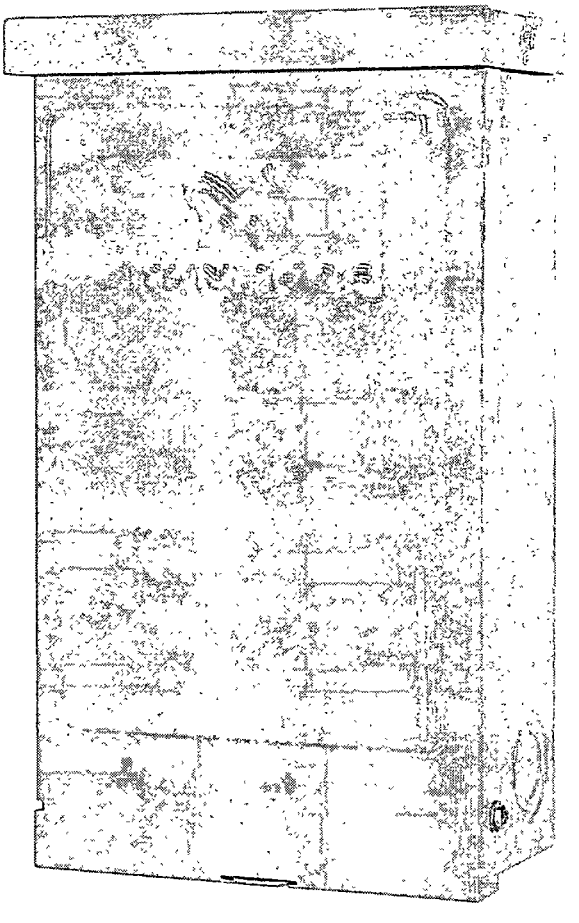

BE › THINK › INNOVATE ›

GRUNDFOS

1. Safety Precautions:

⚠ **CAUTION:** To reduce the risk of electric shock, disconnect power before servicing unit. Failure to properly disconnect power could result in fire, serious injury, or death.

2. Installation Instructions:

Verification of the electrical supply should be made to ensure the voltage, phase and frequency of the control box match that of the motor.

Terminate properly sized (AWG gauge) motor and service leads per the diagram below.

Single-Phase 3-Wire Control Box for Submersible Motors

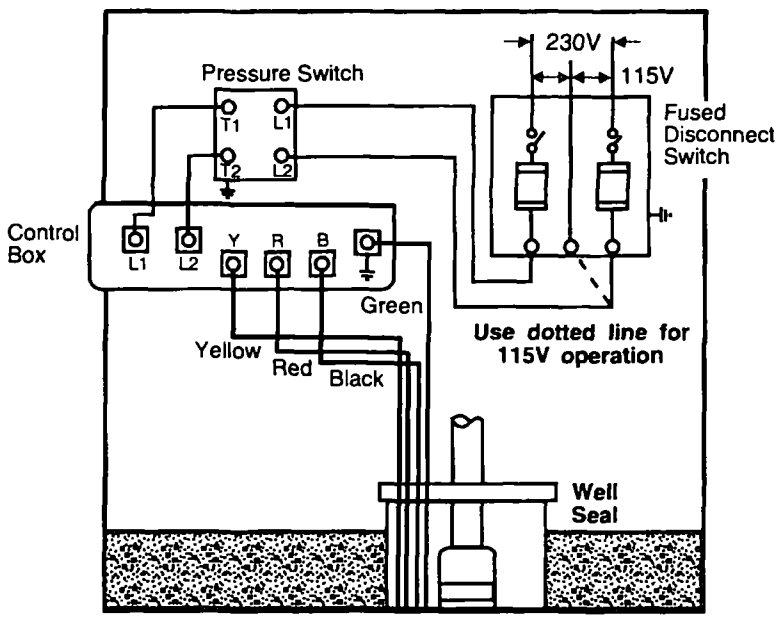

Before making the final surface wiring connection of the drop cable to the control box or panel, check the insulation resistance.

The SA-SPM5 Grundfos Submersible Pump Control Box shall be installed per local State, and Federal codes in accordance with NFPA requirements. See http://www.nfpa.org/Codes/index.asp.

3. Operation and Maintenance

The SA-SPM5 Grundfos Submersible Pump Control Box is intended for use with single phase 3-wire submersible motors as a start control device only. Verify the intended submersible pump, motor and control box are the same horsepower, and voltage.

Service and installation should be performed by an authorized service representative.

4. Grounding Instructions

⚠ **WARNING:** The control box panel shall be permanently grounded in accorance with National Electrical Code and local codes regulations. The ground wire should be a conductor at least the same size (AWG guage) as the drop cable wire size. The ground wire should be run as short a distance as possible and be securely fastened to a true grounding point.

BE › THINK › INNOVATE ›

Being responsible is our foundation
Thinking ahead makes it possible
Innovation is the essence

L-CB-TL-002	04/03

U.S.A.
Grundfos Pumps Corporation
17100 W. 118th Terrace
Olathe, KS 66061
Telephone (913) 227-3400
Fax (913) 227-3500

Canada
Grundfos Canada Inc
2941 Brighton Road
Oakville, Ontario L6H 6C9, Canada
Telephone (905) 829-9533
Fax (905) 829-9512

Mexico
Bombas Grundfos de Mexico, S A de C V
Boulevard TLC #15
Parque Industrial Stiva Aeropuerto
C.P 66600 Apodaca, N L. Mexico
Telephone 011-52-81-8144-4000
Fax. 011-52-81-8144-4010

www.grundfos.com

GRUNDFOS

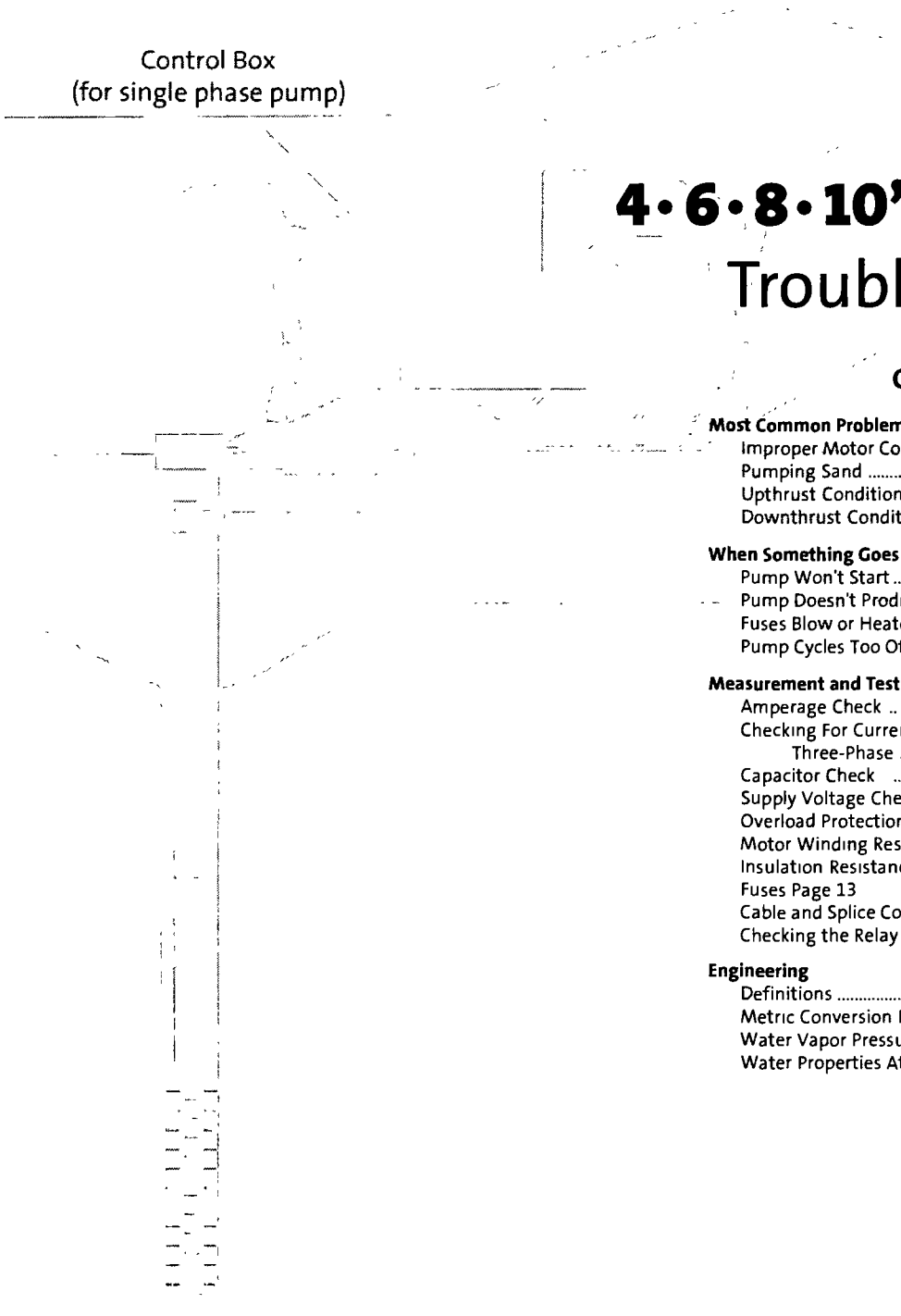

4•6•8•10" Submersibles
Troubleshooting

CONTENTS

Most Common Problem Situations
Improper Motor Cooling ..... Page 2
Pumping Sand ..... Page 3
Upthrust Condition ..... Page 4
Downthrust Condition ..... Page 5

When Something Goes Wrong . . .
Pump Won't Start ..... Page 6
Pump Doesn't Produce Enough Flow (GPM) ..... Page 6
Fuses Blow or Heaters Trip ..... Page 8
Pump Cycles Too Often ..... Page 8

Measurement and Testing
Amperage Check ..... Page 10
Checking For Current Imbalance On Three-Phase Motors ..... Page 10
Capacitor Check ..... Page 11
Supply Voltage Check ..... Page 11
Overload Protection ..... Page 12
Motor Winding Resistance (lead-to-lead) ..... Page 12
Insulation Resistance (lead-to-ground) ..... Page 13
Fuses Page 13
Cable and Splice Condition ..... Page 14
Checking the Relay ..... Page 14

Engineering
Definitions ..... Page 15
Metric Conversion Formulas ..... Page 16
Water Vapor Pressure and Specific Gravity ..... Page 17
Water Properties At Different Altitudes ..... Page 18

Most Common Problem Situations

Poor Motor Cooling*

A submersible pump motor is cooled by the flow of water past its outer housing as the pump is pumping. The water must flow past the motor at a certain velocity for proper cooling to take place, and the minimum velocity needed is different for each diameter motor.

MINIMUM VELOCITY OF WATER PAST MOTOR*

4" diameter motor	.25 feet per second
6" diameter motor	.5 feet per second
8" diameter motor	.5 feet per second
10" diameter motor	.5 feet per second

To determine whether water is flowing past the motor at a high enough velocity, note where the motor diameter and outside sleeve or casing diameter intersect on the following chart. The Gallons Per Minute scale indicates the **minimum flow required** to keep the motor properly cooled.

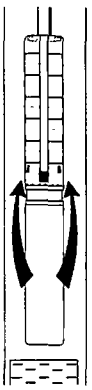

Correct screen position for proper cooling

MINIMUM FLOW REQUIREMENTS FOR SUBMERSIBLE MOTORS*

WELL CASING OR FLOW INDUCER SLEEVE (internal diameter in inches)	4" motor	6" motor	8" motor	10" motor	MOTOR DIAMETER
4 inches	1.2 GPM	--	--	--	
5	7	--	--	--	
6	13	10	--	--	**MINIMUM FLOW (GPM)** (to ensure proper motor cooling)
7	21	28	--	--	
8	30	45	10	--	
10	--	85	55	30	
12	--	140	110	85	
14	--	198	180	145	
16	--	275	255	220	
18	--	--	--	305	

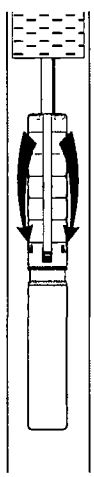

Cascading water from screen does not flow past motor

Insufficient cooling can sometimes result when:

(1) The screen is located above or at the pump, so that the water cascades down into the pump's suction intake without first flowing past the motor.

(2) The casing diameter is so large that the water is drawn into the pump's suction intake from the side without first flowing past the motor.

These problems can be solved by fitting the pump and motor into a **Flow Inducer Sleeve.** This sleeve attaches to the pump and forces water to pass around it and enter the pump's suction intake from below the motor.

If the diameter of the well's casing is too small for a sleeve inducer, a rigid tube (usually 1/4" inside diameter) can be tapped into the discharge piping above the pump (but below any check valves) with the other end positioned below the motor and pointing upwards.

*Grundfos motors have a more effective internal cooling design; therefore, a cooling sleeve is not required in water up to 30° C (86° F). However, all motors will have a longer life with a cooling sleeve installed.

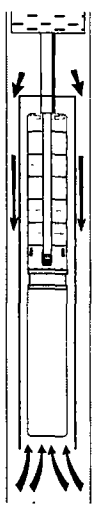

Flow Inducer Sleeve forces water past motor

Pumping Sand

All submersible water pumps are designed with the idea they will be used to pump clean, clear water. Some design changes can be made to enable them to better handle situations that don't meet this ideal, but only to a limited degree.

No situation shortens the life of submersible pump more than pumping silt or **SAND**.

Effect On Pump	Will Be First Noticed By...	Design Changes To Deal With The Problem
SAND works its way into all moving parts of the pump, grinding bearings, impellers, and all other components as they spin against each other. 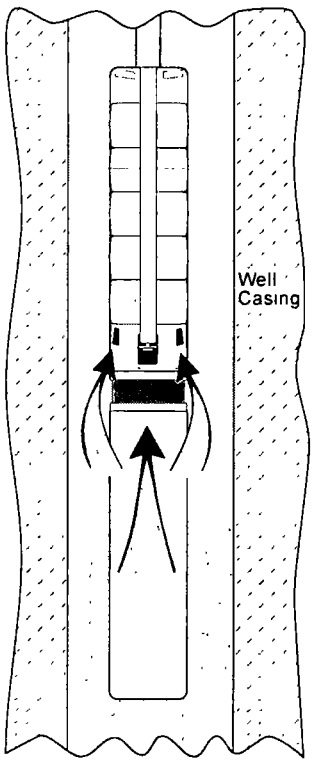	Reduced flow (GPM) and head, since the perfect fit of the impellers and other components will be slowly worn away and the pump will become less and less efficient. 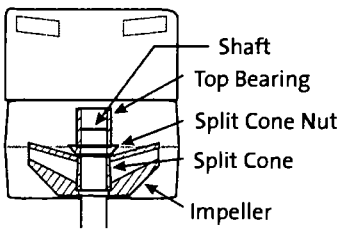 At some point, the pump's performance will become so poor it becomes quite apparent that something is seriously wrong. If the pump is pulled out of the well and the impellers and other moving components are examined, **uniform** wear (not random pitting, which might indicate that pump may have been cavitating) can be seen on virtually every moving part.	There is no way to eliminate all pump damage due to pumping sand. The effects can only be minimized. Since sand tends to be carried along with flow rates greater than 5-8 feet per second (water velocity), an enlarged drop pipe can reduce the water velocity and thereby reduce the chance sand can enter the pump. Of course, if the water velocity drops below the chart on the previous page, motor cooling may become a problem.

Most Common Problem Situations

Upthrust Condition

Pumps are designed with the expectation that the correct size pump will be used in the right situation. An 80 gallon per minute pump which can produce about 600 feet of head (at the same time it delivers 80 GPM) is designed so that if it is used in this situation, the pump will operate at its best efficiency **and** all its components will have a long life. The perfomance curve to the right shows the most efficient operating range for this type of pump.

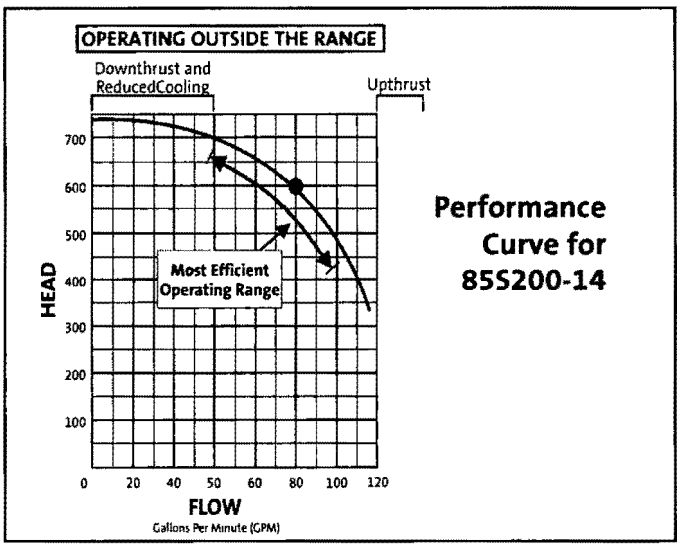

If the pump is not operated within this range, problems can occur.

One such problem can occur when a pump is installed and run in a situation in which it will produce far GREATER flow (GPM) than it was designed for. **In other words, the pump is oversized for what is really needed.** When such a pump is started, the initial thrust (upward water surge) generated by the spinning impellers is so much GREATER than the downward thrust it is expecting to overcome (such as the force of the different water pressure, the weight of the impellers and shaft, etc.), that the entire stack of impellers within the pump is lifted upwards **(UPTHRUST).** Pumps are manufactured with bearings designed to handle intermittent upward water surges up to a certain degree. If the actual flow is much greater than this, an upthrust condition exists. The force of this **UPTHRUST** will first put pressure on the motor's thrust bearing. If and when this bearing wears out, the pump's components will begin to absorb the upthrust as they grind against each other. Upthrust is especially damaging when the pump is started and the drop pipe is empty -- causing a great upthrust of water since no head is present. Check valves in the drop pipe will prevent this from occuring.

BEFORE
pump starts pumping

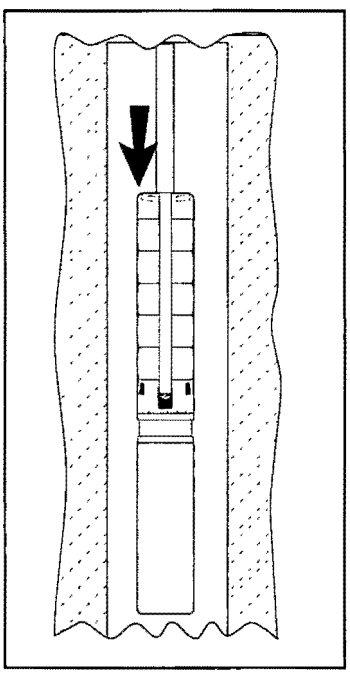

Weight of water and impellers pushes down

AFTER
pump starts pumping

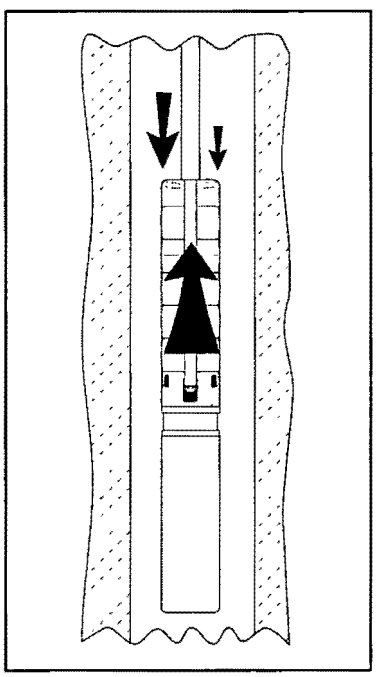

Initial surge of water thrusts impellers upwards

DAMAGE CAUSED

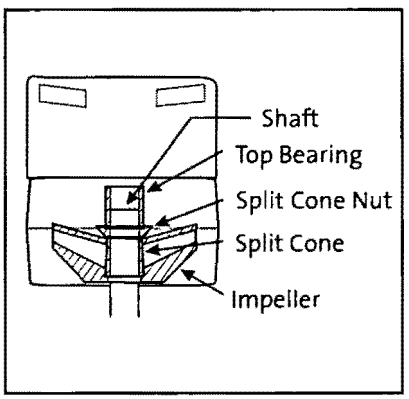

Once the motor's thrust bearing is worn, the pump components begin wearing

Usually, the **UPTHRUST** condition lasts for only a few seconds until the water pressure above the impellers acts as a counterforce to press the impeller stack down onto the motor shaft. Sometimes, however, if the pump is producing far more flow than for which it was designed, the upthrust condition can continue until the pump is stopped.

Downthrust Condition

Pumps are designed with the expectation that the correct size pump will be used in the right situation. An 80 gallon per minute pump which can produce about 600 feet of head (at the same time it delivers 80 GPM) is designed so that if it is used in this situation, the pump will operate at its best efficiency **and** all its components will have a long life. The perfomance curve at right shows the most efficient operating range for this type of pump.

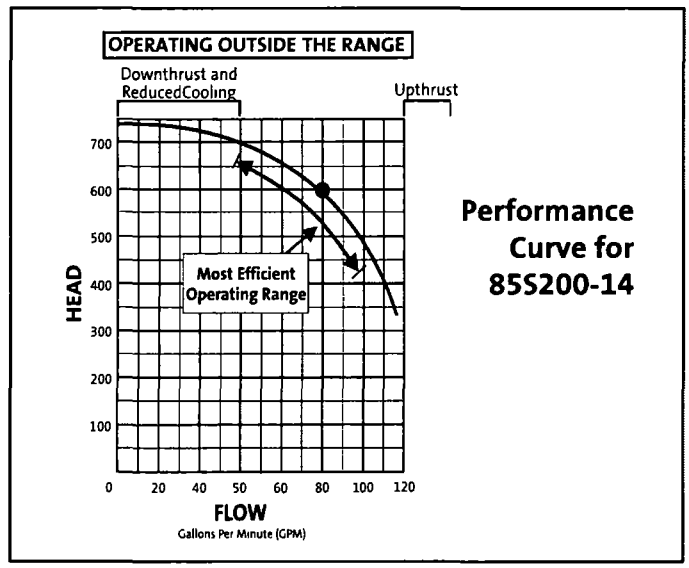

Performance Curve for 85S200-14

If the pump is not operated in this range, problems can occur.

One such problem can occur when a pump is installed and run in a situation in which it will produce HEAD in the range of shut-off pressure (left part of the curve, as shown above). Although the pump is designed to operate over the full curve, if it does not produce enough flow the weight of the shaft and the pressure of the water in the drop pipe is not counterbalanced, causing possible wear to the bearings in the pump and motor. **This can occur if a valve has been closed down so far that the flow is greatly restricted or when the pump is pumping water faster than the well can refill itself.**

In addition to causing possible bearing damage, operating the pump in a downthrust condition is an inefficient use of energy and may not allow for proper motor cooling (see page 2).

BEFORE
pump starts pumping

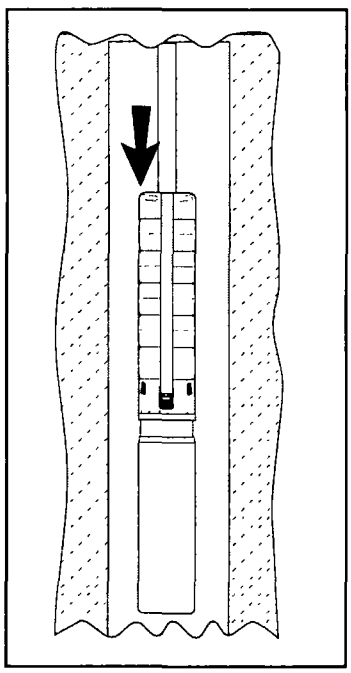

Weight of water and impellers pushes down

AFTER
pump starts pumping

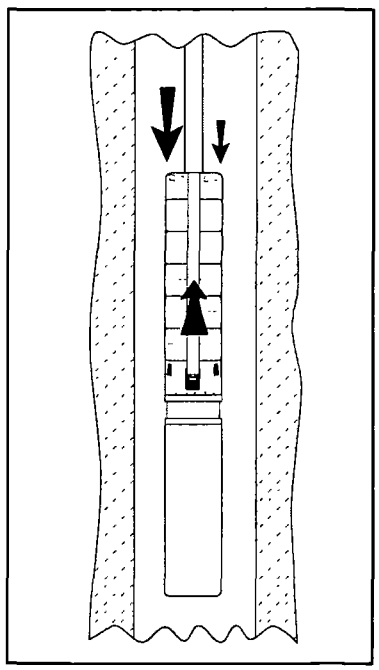

Impellers can produce so much pressure they can grind down against each other

DAMAGE CAUSED

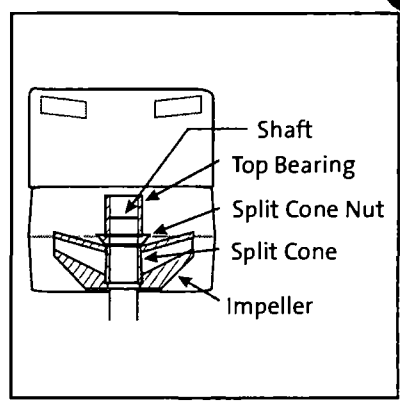

After motor's thrust bearing has worn out, pump components begin to show equal wear from grinding

The best way to check for motor bearing damage is with a shaft height gauge. Refer to the Dismantling & Reassembly section of this manual for complete instructions.

When Something Goes Wrong. . .

Pump Won't Start

Possible Cause	Check This By . . .	Correct This By . . .	
Low or no power at the motor	Check for voltage at the control box or panel See page 11 for instructions.	If there is no voltage at the control panel, check the feeder panel for tripped circuits and reset those circuits	1
Fuses are blown or the circuit breakers have tripped.	Turn off the power and remove the fuses. Check for continuity with an ohmmeter as shown on page 13	Replace the blown fuses or reset the circuit breaker If the new fuses blow or the circuit breaker trips, the electrical installation, motor, and wires must be checked for defects.	2
(3-phase motors only) **Motor starter overloads are burned or have tripped**	Check for voltage on the line and load side of the starter Check the amp draw and make sure the heater is sized correctly	Replace any burned heaters or reset Inspect the starter for other damage If the breaker trips again, check the supply voltage. Ensure that heaters are sized correctly and the trip setting is appropriately adjusted.	3
(3-phase motors only) **Starter does not energize**	Energize the control circuit and check for voltage at the holding coil.	If there is no voltage, check the control circuit fuses. If there is voltage, check the holding coil for weak connections Ensure that the holding coil is designed to operate with the available control voltage. Replace the coil if defects are found.	4
Defective controls	Check all safety and pressure switches for defects Inspect the contacts in control devices.	Replace worn or defective parts or controls.	5
Motor or cable is defective	Turn off the power and disconnect the motor leads from the control box Measure the lead-to-lead resistance of the drop cable with an ohmmeter (set to R x 1). Measure the lead-to-ground values with a megohmmeter (set to R x 100K) See pages 12 and 13 Compare these measurements to the rated values for your motor	If an open or grounded winding is found, pull the pump from the well and recheck the measurements with the lead separated from the motor Repair or replace the motor or cable	6
(1-phase motors only) **Defective capacitor**	Turn off the power and discharge the capacitor by shorting the leads together Check it with an analog ohmmeter (set to R x 100K). See page 11 or use an audible capacitor tester.	When the meter is connected to the capacitor, the needle should jump toward 0 (zero) ohms and slowly drift back to infinity (∞) Replace the capacitor if it is defective	7
Defective pressure switch or the tubing to it is plugged.	Watch the pressure gauges as the pressure switch operates Remove the tubing and blow through it	Replace as neccessary.	8
The pump is mechanically bound or stuck	Turn off the power, pull the pump, and manually rotate the pump shaft. Also check the motor shaft rotation, the shaft height, and the motor's amp draw (to see if it indicates a locked rotor)	If the pump shaft doesn't rotate, remove the pump and examine it If necessary, dismantle it and check the impellers for obstruction Check for motor corrosion	9

Pump Does Not Produce Enough Flow (GPM)

Possible Cause	Check This By . . .	Correct This By . . .	
Shaft is turning in the wrong direction.	Check to make sure the electrical connections in the control panel are correct	Turn off the power Correct the wiring For single phase motors, check the wiring diagram on the motor For three phase motors, simply switch any two power leads.	10
Pump is operating at the wrong speed (too slow)	Check for low voltage (as shown on page 11) and phase imbalance (as shown on page 10)	Replace defective parts or contact power company, as applicable	11
Check valve is stuck (or installed backwards)	Pull the pump and reove the check valve	Re-install or replace.	12
Parts in the pump are worn **or** **Impellers, Inlet Strainer, or Well Screen is clogged**	Install a pressure gauge, start the pump, and gradually close the discharge valve. Read the pressure at shutoff. (Do not allow the pump to operate for an extended period at shutoff)	Convert the PSI you read on the gauge to Feet of Head by. **PSI x 2.31 ft** Add to this number the number of feet (vertically) from the gauge down to the water's pumping level. Refer to the pump curve for the model you are working with to determine the shutoff head expected for that model If those figures and yours do not match, remove the pump and inspect impellers, chambers, etc , for clogging.	13
The water level in the well may be too low to supply the flow desired **or** **Collapsed well**	Using a depth gauge, check the drawdown in the well while the pump is operating	If the pumping water level (including drawdown) is not **AT LEAST 3 FEET** above the pump's inlet strainer, either· 1 Lower the pump further down the well. 2. Throttle back the discharge valve to decrease the flow, thereby reducing drawdown	14
Broken shaft or coupling	Pull pump and inspect	Replace as necessary.	15
There are leaks in the fittings or piping	Pull the pump out of the well.	The suction pipe, valves, and fittings must be made tight. Repair any leaks and retighten all loose fittings	16

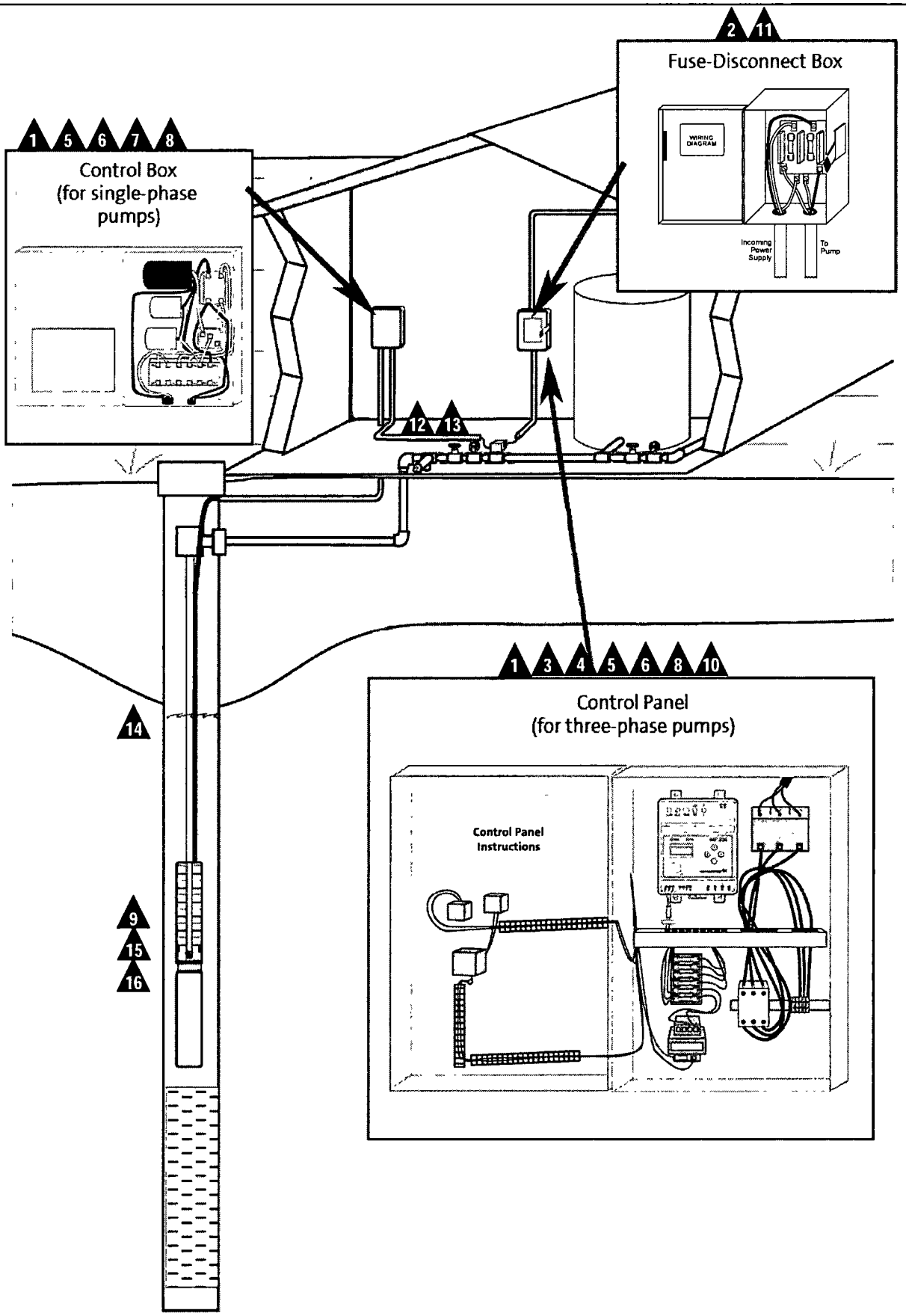
2 11
Fuse-Disconnect Box
WIRING DIAGRAM
Incoming Power Supply
To Pump
1 5 6 7 8
Control Box
(for single-phase pumps)
12 13
1 3 4 5 6 8 10
Control Panel
(for three-phase pumps)
Control Panel Instructions
14
9
15
16

When Something Goes Wrong. . .

Fuses Blow or Heaters Trip

Possible Cause	Check This By . . .	Correct This By . . .	
Improper voltage	Check the voltage at the control box or panel. See page 11 for instructions	If voltage varies by more than 10% (+ or -), contact the power company	
	If the incoming voltage is + or -10%, check the wire size and then measure the distance between the pump motor and the pump control panel.	Rewire with correct gauge Undersized wire and a great distance between the control panel and the pump motor increases resistance and decreases the voltage by the time it reaches the pump motor	1
The starter overload is set too low.	Cycle the pump and measure the amperage See page 10 for instructions.	Increase the heater size (use a slo-blo) or adjust the trip setting Do not, however, exceed the recommended rating.	2
(3-phase motors only) **Current is imbalanced.**	Check the current draw on each lead to the motor See page 11 for instructions	The current imbalance must be within 5% of each other. If they are not, check the wiring and the power supply	3
The wiring or connections are faulty.	Check to make sure the wiring is correct and there are no loose terminals	Tighten any loose terminals and replace any damaged wire	4
(1-phase motors only) **Capacitor is defective**	Turn off the power and discharge the capacitor Check start and run capacitors with an ohmmeter (set at R x 100K) See page 11 for instructions.	When the meter is connected to the capacitor, the needle should jump towards 0 (zero) ohms and then slowly drift back to infinity (∞) Replace the capacitor if it is defective	5
Fuse, heater, or starter are the wrong size	Check the fuses and heaters against the motor manufacturer's specification charts.	Replace as necessary.	6
The control box location is too hot	Touch the box with your bare hand during the hottest part of the day -- you should be able to keep your hand on it without burning.	Shade, ventilate, or move the control box so its environment does not exceed 120°F	7
(1-phase motors only) **Wrong control box**	Check requirements for the motor against the control box specifications.	Replace as necessary.	8
Defective pressure switch	Watch gauges as pressure switch operates	Replace as necessary	9
The motor is shorted or grounded.	Turn off the power and disconnect the wiring. Measure the lead-to-lead resistance with an ohmmeter (set to R x1). Measure the lead-to-ground resistance (set to R x100K). Compare these measurements to the rated values for your motor	If you find an open or grounded winding, remove the motor and recheck the leads. If OK, check the leads for continuity and for bad splice.	10
Poor motor cooling	Find the internal diameter of the well casing (or sleeve, if used) on the chart on page 2 and check for proper cooling.	Increase the pump flow (GPM) so proper cooling is possible (see chart on page 2) or pull the pump out of the well and add a sleeve with a smaller internal diameter *(see chart on page 2)*	11
Bad motor thrust bearing	Measure for high amps as explained on page 10.	If amps are too high, pull the pump and replace the motor.	

Pump Cycles Too Often

Possible Cause	Check This By . . .	Correct This By . . .	
The pressure switch is defective or is not properly adjusted.	Check the pressure setting on the switch Check the voltage across closed contacts	Adjust the pressure switch with a screwdriver or replace it if defective	13
The tank is too small	Check the tank size and amount of air in the tank The tank size should be about 10 gallons for each GPM needed (16 GPM = 160 gal.) At the pump cut-in pressure, the tank should be about 2/3 filled with air.	Replace the tank with one that is the correct size	14
There is insufficient air charging of the tank or piping is leaking.	Pump air into the tank or diaphragm chamber Check the diaphragm for leaks. Check the tank and piping for leaks with soapy water. Check the air-to-water ratio in the tank	Repair as necessary	15
Plugged snifter valve or bleed orifice (causing pressure tank to be water-logged)	Examine them for dirt or erosion.	Repair or replace as necessary	16
Leak in the pressure tank or piping.	Check the setting and operation of the level control.	Readjust the level control setting (according to the manufacturer's instructions) or replace it if defective.	17
The level control is defective or is not properly set.	Check the yield of the well (determined by the well-test) against the pump's performance curve	Reduce the flow by throttling back the valve. or Change the pump	18
Pump is oversized for the application. It is outpumping the yield of the well and pumping itself dry.	Refer to the tank's operating and installation instructions and make sure it is installed correctly	Repair or replace as needed	19

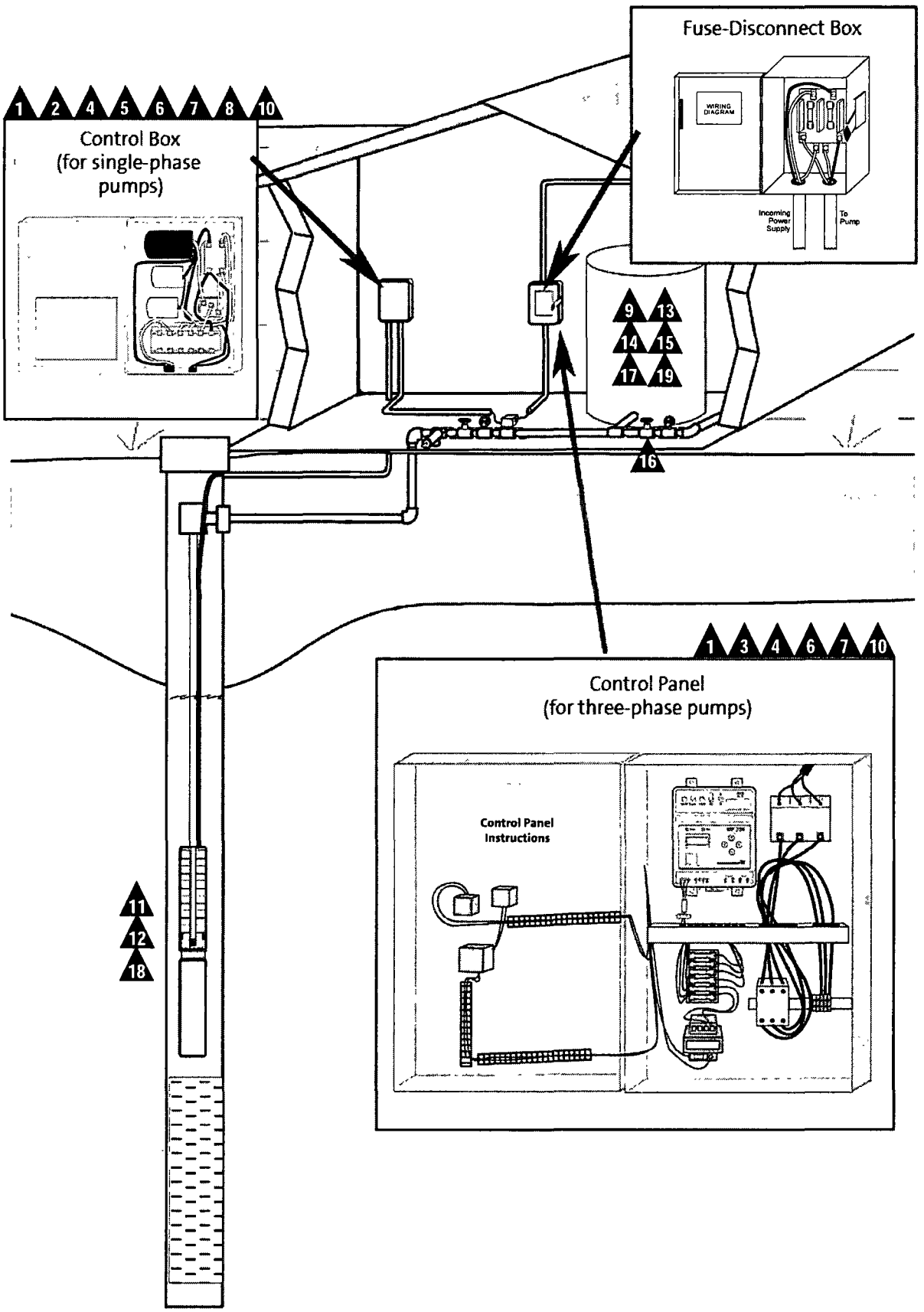
Fuse-Disconnect Box
WIRING DIAGRAM
Incoming Power Supply
To Pump
1 2 4 5 6 7 8 10
Control Box
(for single-phase pumps)
9 13
14 15
17 19
16
1 3 4 6 7 10
Control Panel
(for three-phase pumps)
Control Panel Instructions
11
12
18

Amperage Check

To check the electrical current (measured in amperes, or "amps") use an ammeter.

Instructions

1. Make sure the pump is running
2. Set the rotary scale on the front of the ammeter to the highest scale.
3. Open the control box and place the jaws of the ammeter around the wire to be measured.
4. Slowly rotate the scale on the ammeter back towards 0 (zero) until an exact reading is shown.
5. Record the measurement
6. Repeat for the other wires.

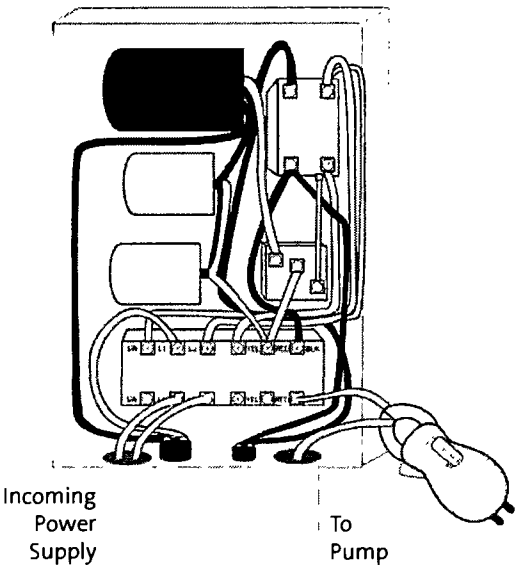

Evaluation

If the amp draw exceeds the service factor amps for the pump (as listed in the Motors section of the Service Manual), then:

- The motor starter may have burned contacts
- The terminals in the starter or terminal box may be loose
- There may be a winding defect. Check the winding and insulation resistance (see pages 12 and 13)
- The motor windings may be shorted or grounded
- The pump may be damaged in some way and may be causing a motor overload.
- A voltage supply or current imbalance (3-phase only) may exist. Follow the steps below to determine if this is true.
- The insulation on the drop cable may be torn, exposing the cable.

Current Imbalance On Three-Phase Motors

If the motor is connected to three-phase power, the balance of those three phases can be checked in the following way:

1. Measure the amperage of each wire as instructed above and record these figures.
2. Add together the total amperage measured by the three wires.
3. Divide this number by three to get the **average** amperage reading for the three wires.
4. Check over your numbers and determine which wire has the greatest difference from the average.
5. Take that number and subtract it from the average to determine the amount of **difference**.
6. Divide the **difference** by the **average**.
7. Multiply this number by 100 to obtain the percent of current imbalance for that particular hookup.
8. Turn **POWER OFF**
9. Repeat these steps for the other two possible hookup installations so that each motor lead is connected to a different power lead than it was before.

	Hookup 1	Hookup 2	Hookup 3
Incoming power leads	L1 L2 L3	L1 L2 L3	L1 L2 L3
Motor leads	A B C	C A B	B C A

(where A, B, and C represent each motor lead or each set of leads joined together to make a single motor lead)

Example:

A = 51 amps	C = 50 amps	B = 50 amps
B = 46 amps	A = 49 amps	C = 48 amps
C = 53 amps	B = 51 amps	A = 52 amps
Total = 150	Total = 150	Total = 150
150/3 = 50	150/3 = 50	150/3 = 50
- 46 = 4	- 49 = 1	- 48 = 2
4/50 = .08 or 8 %	1/50 = .02 or 2 %	2/50 = .04 or 4 %

Evaluation

If the the current imbalance is greater than 5% on all three hookups, then:

- If the largest difference in amps is consistently drawn from the same power lead (L1, L2, or L3 above), contact the power company. Your voltage should be balanced to within + or - 5%.
- If the largest difference in amps is consistently drawn from the same motor lead (A, B, or C above), there is likely a problem with the motor. Check the items listed under "Evaluation" near the top of this page.

If the current imbalance exceeds 5% one or two of the legs, use the hookup that has the least difference and check the motor for some of the other problems listed under "Evaluation" near the top of this page.

Capacitor Check

To check the condition of any capacitor on single phase motors, use an ohmmeter.

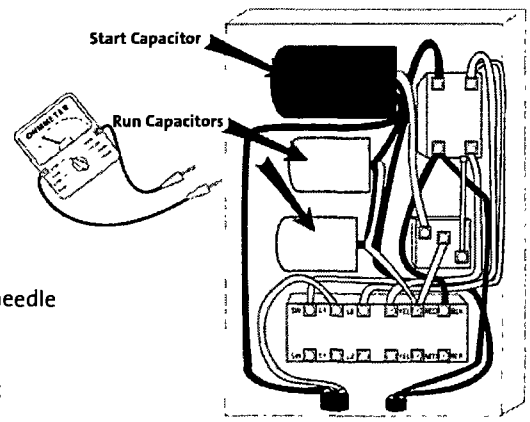

Instructions:

1. Turn the **POWER OFF**.
2. Disconnect the capacitor from the power source.
3. Discharge the capacitor by touching its leads together.
4. Set the scale selector on the ohmmeter to R x 100K.
5. Connect the leads of the ohmmeter to the black and orange wires of the capacitor.
6. Watch the ohmmeter scale.
7. Disconnect one lead from the capacitor for approximately 30 seconds. The needle should return to the last reading taken.

Evaluation

If the capacitor is OK, the needle should swing towards zero and then float back towards infinity (∞). If the needle drops and remains at zero, the capacitor is probably shorted. If the needle remains at a high value, there is an open circuit.

CAUTION: This test may indicate a good capacitor even though it may have lost some capacitance, making the motors run noisy or draw high amps. To safeguard against this, the capacitor can be checked with a capacitor meter.

Supply Voltage Check

To check the supply voltage, use a voltmeter (or amprobe) with the power on.

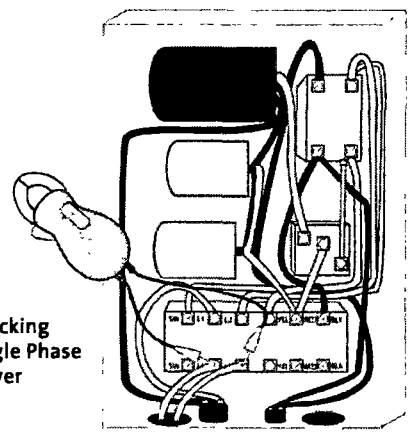

Instructions

1. Set the voltmeter to the highest scale
2. Remove the cover of the control box...BE CAREFUL -- POWER IS STILL BEING SUPPLIED TO THE CIRCUIT. Do not touch the voltmeter leads together while they are in contact with the power lines.
3. Touch the ends of the voltmeter leads as follows:

<u>Single Phase Motors</u>

Touch one voltmeter lead to each of the lines supplying power to the control (L_1 and L_2 , or L_1 and N for 115V circuits). ⟶

<u>Three Phase Motors</u>

Touch a voltmeter lead to the following:

- Power leads L_1 and L_2
- Power leads L_2 and L_3
- Power leads L_3 and L_1

} *These tests should give a reading of full line voltage.*

- Two fuses
- Two contact points
- Two heaters

Evaluation

When the motor is under load, the voltage should be -10% and +6% of the nameplate voltage. Any variation larger than this can cause damage to the motor windings and should be noticeable as a high amp problem.

If The Motor Nameplate Reads . . .	Then the minimum and maximum voltage should be . . .	
	Minimum	Maximum
115V (single phase)	105 volts	121 volts
208V (single or three phase)	188 "	220 "
230V " "	210 "	243 "
460V (three phase)	414 "	487 "
575V " "	518 "	609 "

Any variations larger than these may indicate a poor electrical supply. The motor should not be operated under these conditions. Contact your power supplier to correct the problem or change the motor to one requiring the voltage you are receiving.

Motor Winding Resistance (lead-to-lead)

To check the electrical condition of the drop cable, splice, and motor windings, a resistance check with an ohmmeter is required.

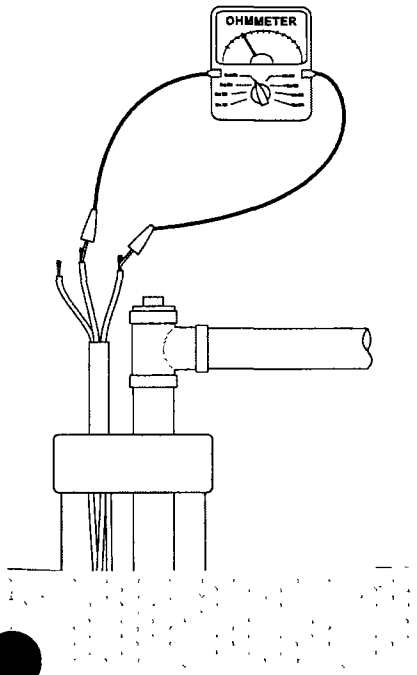

Instructions:

1. Turn the **POWER OFF**.
2. Disconnect all electrical leads to the drop cable.
3. Set the scale selector on the ohmmeter to R x 1 (if you expect ohm values under 10) or R x 10 (for ohm values over 10).
4. Touch the leads of the ohmmeter to two motor leads:
   Single Phase Motors
   Touching the leads of the ohmmeter to the black and yellow leads will measure the main winding's resistance for Franklin and Grundfos 402 motors. The red and yellow leads will be the start winding's resistance.
   Three Phase Motors
   Touching the leads of the ohmmeter to any two black leads will measure that winding's resistance. Repeat for all three possible lead combinations.
5. Watch the ohmmeter scale and record this figure. Subtract the ohm resistance for the drop cable (chart below) from the number. Compare the remaining figure with the one shown in the Motors section of this manual.

If:	Then:
Ohm values are normal	Motor windings are okay
One ohm value is less than normal	That motor winding may be starting to short
One ohm value is greater than normal	That winding may be starting to open
Some ohm values are greater than normal (>25%) and some are less than normal (± 25%)	The leads may be connected incorrectly, or have a break in the insulating jacket

If ohm readings are not normal and you want to verify the problem is not with the splice or drop cable, remove the lead from the motor and check the resistances from pin to pin directly at the motor. If the motor checks out okay, the fault is in the lead or splice (see page 14).

Total Resistance of Drop Cable *(from control box to motor and back)*

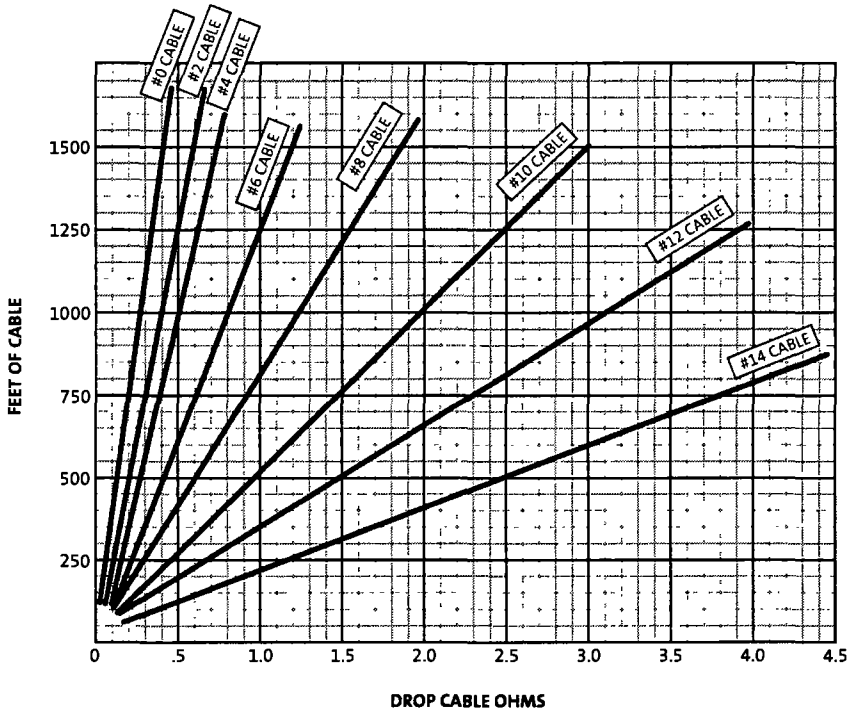

The values shown are for copper conductors. If aluminum conductor drop cable is used, the resistance will be higher for each foot of cable of the same size.

Copper ÷ .61 = Aluminum

Insulation Resistance (lead-to-ground)

To check the insulation resistance of the drop cable, splice, and motor leads, a megohmmeter is required.

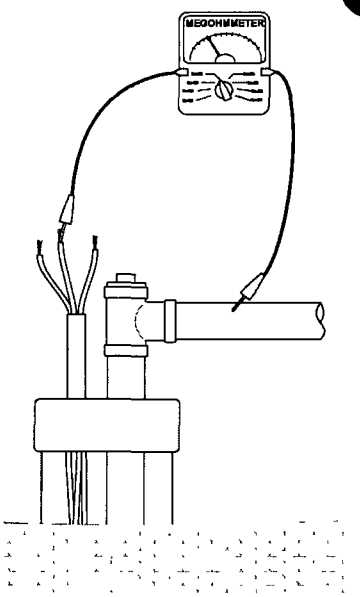

Instructions:

1. Turn the **POWER OFF**.
2. Disconnect all electrical leads to the drop cable.
3. Set the scale selector on the megohmmeter to R x 100, touch its leads together, and adjust the indicator to zero.
4. Touch the leads of the megohmmeter to each of the motor leads and to ground (i.e. L_1 to ground; L_2 to ground, etc.). The well casing, if made of steel, makes an excellent ground.
5. Watch the megohmmeter scale and compare this figure with the chart below.

Evaluation: In general, any ohm value above 1,000,000 ohms indicates everything is OK. The following table gives more specifics.

OHM VALUE	MEGAohm VALUE	THIS INDICATES THAT ...
		If The Motor HAS NOT Yet Been Installed:
2,000,000 (or more)	2.0	It is a new motor
1,000,000 (or more)	1.0	It is a used motor than can be used again (insulation OK)
		If The Motor HAS Been Installed: *(means that ohm readings will be for the drop cable plus the motor)*
500,000 - 1,000,000	0.5 - 1.0	The motor is in reasonably good condition
20,000 - 500,000	.02 - 0.5	The motor may have been damaged by lightning or has damaged leads.
10,000 - 20,000	.01 - .02	The motor has certainly been damaged or has damaged leads. The pump should be pulled and repairs made to the motor leads or replace the motor completely. The motor may still operate, but probably not for long.
less than 10,000	0 - .01	The motor has failed or the motor lead insulation has been completely destroyed. The pump must be pulled and the motor lead (drop cable) repaired or the entire motor replaced. **The motor will not run in this condition.**

Fuses

To check the condition of electrical fuses, an ohmmeter is required.

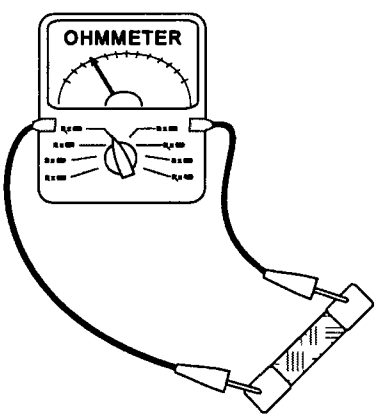

Instructions:

1. Turn the **POWER OFF** at the main disconnect or power source.
2. Remove the fuse.
3. Set the scale selector on the ohmmeter to R x 1.
4. Touch each lead of the ohmmeter to one end of the fuse.

Evaluation:

A good fuse should have zero (0) ohm reading. If the ohm value is near or past infinity, the fuse must be replaced.

Cable and Splice Condition

To check the electrical condition of the cable and splice insulation, a megohmmeter is required.

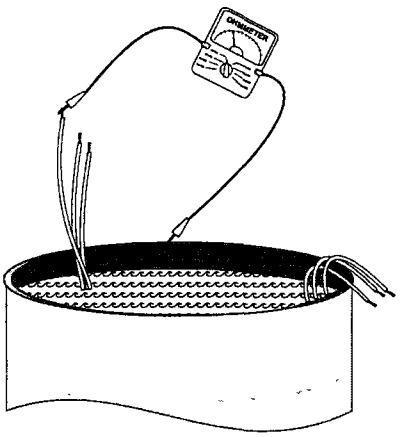

Instructions:

1. Turn the **POWER OFF.**
2. Remove the cable from the motor and electrical supply.
3. Submerge the cable in a steel barrel of water. Make sure both ends stay out of the water. Salt may be added to increase the conductance of the water.
4. Set the megohmmeter to R x 100K. Zero-adjust the ohmmeter by touching its two leads together.
5. Touch one megohmmeter lead to the steel barrel and other to a bare cable lead.
6. If the megohmmeter drifts towards zero (0), either that lead or the splice for that lead has a leak (fault). To find out if it is the splice:

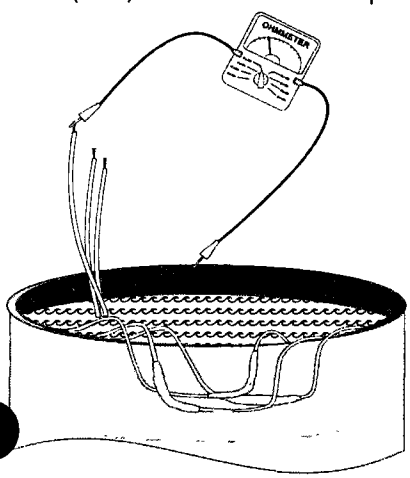

   a. Raise the splice for that lead out of the water.
   b. Repeat step 5.
   c. If the megohmmeter drifts towards infinity, the fault is in the splice.
   d. If the megohmmeter drifts towards zero (0), the fault is somewhere else in that lead. Gradually pull the rest of that cable lead out of the water until the megohmmeter drifts towards infinity. When it does, the leak is at that point in the cable lead.
7. Repeat for each of the motor leads.

Evaluation:
Any faulty leads should be replaced using waterproof electrical tape.

Checking the Relay

(SINGLE-PHASE CONTROL BOXES ONLY)

To check the electrical condition of the relays on single phase control boxes, an ohmmeter is required.

Specific instructions for checking the relay differ from control box to control box. Refer to the inside cover of your control box.

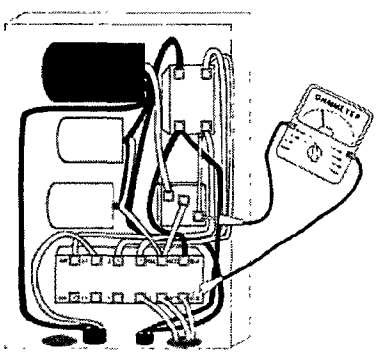

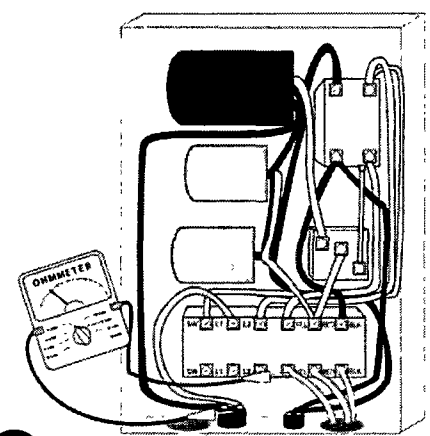

Overload Protection

To check the electrical condition of the thermal overloads, an ohmmeter is required.

Instructions:

1. Turn the **POWER OFF.**
2. Set the scale selector on the ohmmeter to R x 1.
3. Touch one of the ohmmeter leads to an overload protector and one to terminal 1, then terminal 3. Repeat for each overload protector.

Evaluation:
If the ohm values are 0.5 ohms or less, the overload protectors should still be functional. If not, they should be replaced.

Definitions

NET POSITIVE SUCTION HEAD (two types)

Before a centrifugal water pump can operate, the water must enter the pump under a certain minimum amount of pressure. For submersible pumps, this minimum is easily reached, since the pump is submerged in water and both the atmospheric pressure (14.7 psi) and the pressure of the water in the well are present. The amount of pressure (expressed in feet of head) required for a given pump to operate is known as its Net Positive Suction Head **Required**.

This number is determined by extensive testing of the pump by the manufacturer. These requirements are normally shown in graphical form (an **NPSH curve**) for a pump at every flow (GPM) within the flow range for which the pump is designed. As a pump's flow (GPM) increases, the NPSHR needed to continue that flow (without cavitating) also increases.

The amount of pressure (expressed in feet of head) that is actually available to a pump is known as its Net Positive Suction Head **Available**. Since the NPSH **Available** to the pump is almost always greater than the NPSH **Required** (for submersible pumps, that is), they are usually not a cause for any concern when sizing a pump or troubleshooting.

For submersible pumps, NPSH Required should not be confused with Total Dynamic Head, which is the amount of head the pump must produce to deliver water at the desired flow rate (GPM) in a given situation. ***Total Dynamic Head*** *(or TDH, as it is sometimes called) is explained below.*

TOTAL DYNAMIC HEAD

When selecting (or "sizing") a pump, two questions must be answered:

1. How much flow is needed ?
   (expressed in Gallons Per Minute)
2. How much head must the pump produce ?
   (known as ***Total Dynamic Head****)*

To determine the Total Dynamic Head the pump must produce, 5 pieces of information are needed:

A **STATIC WATER LEVEL**

\+

B **DRAWDOWN**
(as the pump is pumping)

\+

C **TANK ELEVATION**

\+

D **TANK PRESSURE**
(multiply by 2.31 to convert psi to feet of head)

\+

E **FRICTION LOSSES**

THE TOTAL
OF THESE 5 NUMBERS IS THE AMOUNT OF HEAD THE PUMP MUST PRODUCE

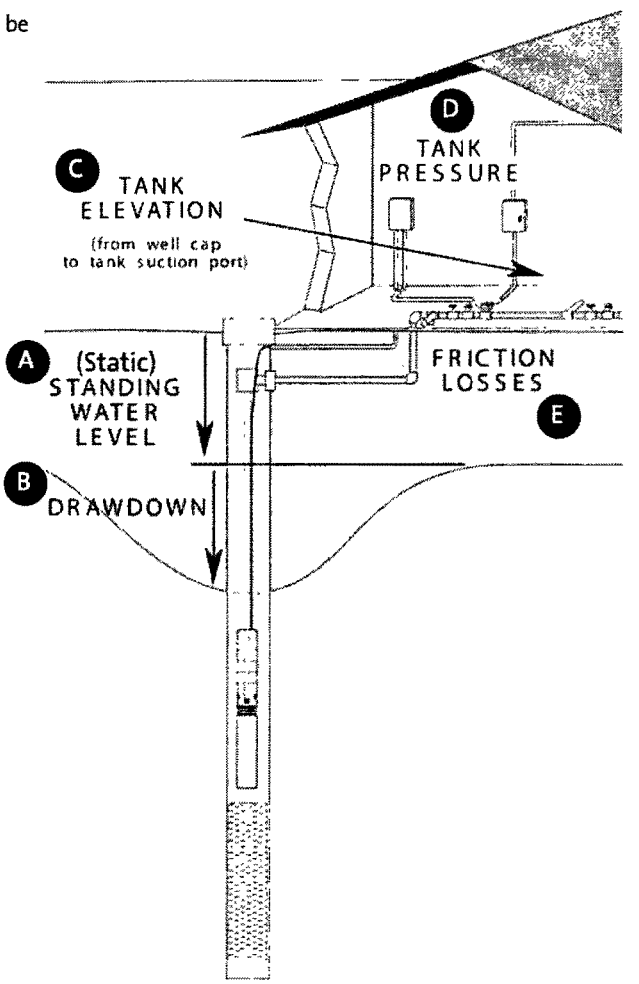

AFFINITY LAWS

The mathematical relationships which permit the head, capacity, brake horsepower (BHP), and NPSH of centrifugal pumps to be predicted based on small changes in impeller diameter size or shaft speed (RPM) changes. These relationships are:

For diameter changes at a constant RPM:

$\frac{D_1}{D_2} = \frac{GPM_1}{GPM_2}$ *Flow changes in direct proportion to the ratio of the diameter change.*

$\left(\frac{D_1}{D_2}\right)^2 = \frac{H_1}{H_2}$ *Head changes to the square ratio of the ratio of the diameter change.*

$\left(\frac{D_1}{D_2}\right)^3 = \frac{BHP_1}{BHP_2}$ *BHP changes to the cube of the ratio of the diameter change*

For RPM changes:

$\frac{RPM_1}{RPM_2} = \frac{GPM_1}{GPM_2}$ $\left(\frac{RPM_1}{RPM_2}\right)^2 = \frac{NPSH_1}{NPSH_2}$

$\left(\frac{RPM_1}{RPM_2}\right)^2 = \frac{H_1}{H_2}$

$\left(\frac{RPM_1}{RPM_2}\right)^3 = \frac{BHP_1}{BHP_2}$

} *Head is affected by the square of the ratio of RPM change and BHP is affected by the cube of the ratio of the RPM change*

Conversion Formulas

HEAD (in feet) =

$$\frac{\text{Pressure (PSI) x 2 31}}{\text{Specific Gravity (for water, 1.0 at ambient temperatures)}}$$

PRESSURE (PSI) =

$$\frac{\text{HEAD (in ft) x Specific Gravity (for water, 1.0 at ambient temperatures)}}{2.31}$$

ATMOSPHERIC PRESSURE
Pressure of the Atmosphere Pushing Down (at sea level) = 14.7 PSI = 34 feet of HEAD

BRAKE HORSEPOWER
Horsepower Delivered to the Pump Shaft =

$$\frac{\text{GPM x HEAD x Specific Gravity (for water, 1.0 at ambient temps)}}{\text{3960 x Efficiency Of Pump}}$$

PUMP EFFICIENCY Of The Pump =

$$\frac{\text{GPM x HEAD x Specific Gravity}}{\text{3960 x Brake Horsepower}}$$

FOOT POUNDS = Newton Meters (or Nm) x 7376

DEGREES FARENHEIT = (Degrees Celsius x 9/5) + 32

Water Vapor Pressure and Specific Gravity

°F	°C	Specific Gravity (1 at 60°F)	Weight (Lbs per cubic foot)	Vapor Pressure (PSIA)	Vapor Pressure (in feet)
32	0	1.002	62 42	0.0885	0.204
40	4 4	1 001	62.42	0.1217	0.281
45	7.2	1.001	62 40	0.1475	0.340
50	10.0	1.001	62.38	0.1781	0 411
55	12.8	1.000	62 34	0.2563	0.591
60	15.6	1.000	62.34	0.2563	0.591
65	18.3	999	62 31	0.3056	0.839
70	21.1	999	62.27	0.3631	0 839
75	23.9	.998	62.24	0.4298	0 994
80	26.7	.998	62.19	0.5069	1 172
85	29.4	.997	62.16	0.5959	1.379
90	32.2	.996	62 11	0.6982	1 617
95	35 0	.995	62 06	0.8153	1 890
100	37.8	.994	62.00	0.9492	2 203
110	43.3	.992	61 84	1.275	2 965
120	48.9	.990	61 73	1.692	3.943
130	54.4	.987	61 54	2.223	5 196
140	60.0	.985	61 39	2.889	6 766
150	65.6	.982	61.20	3.718	8 735
160	71.1	.979	61 01	4.741	11 172
170	76.7	.975	60 79	5.992	14.178
180	82.2	.972	60 57	7.510	17.825
190	87 8	.968	60 35	9.339	22.257
200	93.3	.964	60 13	11.526	27.584
212 (boiling point)	100 0	.959	59.81	14.696	35.353
220	104.4	.956	59 63	17.186	41.343
240	115 6	.948	59.10	24.97	60.77
260	126.7	.939	58 51	35.43	87.05
280	137.8	.929	58 00	49.20	122.18
300	148.9	919	57 31	67.01	168 22
320	160 0	.909	56.66	89.66	227.55
340	171.1	.898	55 96	89.66	227.55
360	182.2	.886	55.22	153.04	398 49
380	193.3	.874	54 47	195 77	516.75
400	204.4	.860	53.65	247.31	663.42
420	215 6	.847	52.80	308.83	841 17
440	226.7	.833	51.92	381.59	1056 8
460	237.8	.818	51.02	466.9	1317 8
480	248.9	.802	50.00	566.1	1628 4
500	260 0	.786	49.02	680.8	1998.2

Water Properties at Different Altitudes

ALTITUDE		BAROMETER READING		ATMOS. PRESSURE		Boiling Point Of Water F°
Feet	Meters	IN HG	MM. HG	PSIA	Feet of Water	
-1000	-304.8	31.0	788	15.2	35 2	213.8
-500	-152.4	30 5	775	15.0	34 6	212.9
0	**0.0**	**29.9**	**760**	**14.7**	**33.9**	**212.0**
+500	+152.4	29.4	747	14 4	33.3	211 1
+1000	304.8	28.9	734	14.2	32 8	210 2
1500	457.2	28.3	719	13.9	32 1	209.3
2000	609 6	27.8	706	13.7	31 5	208.4
2500	762.0	27 3	694	13.4	31 0	207.4
3000	914 4	26.8	681	13.2	30 4	206.5
3500	1066.8	26 3	668	12.9	29 8	205 6
4000	1219 2	25 8	655	12.7	29 2	204.7
4500	1371 6	25 4	645	12.4	28.8	203 8
5000	1524.0	24 9	633	12.2	28.2	202 9
5500	1676.4	24 4	620	12 0	27.6	201 9
6000	1828.8	24 0	610	11 8	27.2	201 0
6500	1981.2	23.5	597	11.5	26 7	200.1
7000	2133 6	23.1	587	11 3	26.2	199 2
7500	2286.0	22 7	577	11 1	25.7	198.3
8000	2438.4	22 2	564	10 9	25.2	197 4
8500	2590 8	21.8	554	10.7	24 7	196.5
9000	2743.2	21 4	544	10 5	24.3	195.5
9500	2895.6	21.0	533	10.3	23 8	194.6
10000	3048.0	20 6	523	10 1	23 4	193.7
15000	4572 0	16.9	429	8 3	19 2	184 0

LSP-TL-015 | Rev 08/06
PRINTED IN USA

GRUNDFOS Pumps Corporation
17100 W. 118th Terrace
Olathe, Kansas 66062
Phone: 913.227.3400
Fax: 913.227.3500
www.grundfos.com

GRUNDFOS Canada, Inc.
2941 Brighton Road
Oakville, Ontario L6H 6C9 Canada
Phone: 905.829.9533
Fax: 905.829.9512

Bombas GRUNDFOS de Mexico S.A. de C.V.
Boulevard TLC No. 15
Parque Industrial Stiva Aeropuerto
Apodaca, N.L. Mexico 66600
Phone: 52.81.8144.4000
Fax: 52.81.8144.4010

GRUNDFOS

SLX9000
Adjustable Frequency Drives

Effective January 2009
Supersedes October 2008

User Manual

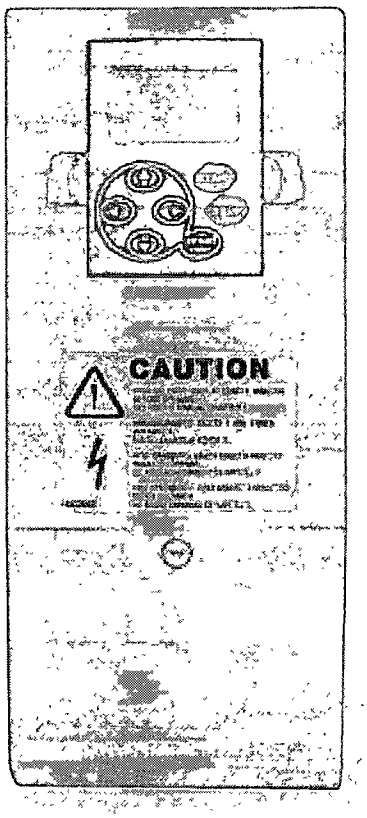

EATON
Powering Business Worldwide

January 2009

Important Notice – Please Read

The product discussed in this literature is subject to terms and conditions outlined in Eaton Electrical Inc. selling policies. The sole source governing the rights and remedies of any purchaser of this equipment is the relevant Eaton Electrical Inc. selling policy.

NO WARRANTIES, EXPRESS OR IMPLIED, INCLUDING WARRANTIES OF FITNESS FOR A PARTICULAR PURPOSE OR MERCHANTABILITY, OR WARRANTIES ARISING FROM COURSE OF DEALING OR USAGE OF TRADE, ARE MADE REGARDING THE INFORMATION, RECOMMENDATIONS AND DESCRIPTIONS CONTAINED HEREIN. In no event will Eaton Electrical Inc. be responsible to the purchaser or user in contract, in tort (including negligence), strict liability or otherwise for any special, indirect, incidental or consequential damage or loss whatsoever, including but not limited to damage or loss of use of equipment, plant or power system, cost of capital, loss of power, additional expenses in the use of existing power facilities, or claims against the purchaser or user by its customers resulting from the use of the information, recommendations and descriptions contained herein.

The information contained in this manual is subject to change without notice.

Cover Photo: Cutler-Hammer® SLX9000 Adjustable Frequency Drive.

Table of Contents

LIST OF FIGURES iv
LIST OF TABLES vi
SAFETY viii
Definitions and Symbols viii
Hazardous High Voltage viii
Warnings, Cautions and Notices ix
CHAPTER 1 — OVERVIEW 1-1
Receiving and Inspection 1-1
Storage 1-2
Maintenance 1-2
Technical Data 1-2
CHAPTER 2 — INSTALLATION 2-1
Mounting 2-1
Cooling 2-9
Changing EMC Protection Class from H to T 2-10
CHAPTER 3 — POWER WIRING 3-1
Power Connections 3-1
Installation Guidelines 3-8
CHAPTER 4 — CONTROL WIRING 4-1
Control Unit 4-1
Control Connections 4-2
Motor Thermistor (PTC) Connection 4-9
CHAPTER 5 — MENU INFORMATION 5-1
Keypad Operation 5-1
Indicators on the Keypad Display 5-1
Numeric Indicators 5-2
Keypad Pushbuttons 5-3
Menu Navigation 5-4
CHAPTER 6 — START-UP 6-1
Safety Precautions 6-1
Sequence of Operation 6-2
Start-Up Wizard 6-4
CHAPTER 7 — BASIC APPLICATION 7-1
Monitoring Values (Control Keypad: Menu M1) 7-2
Parameter List 7-3
CHAPTER 8 — MULTI-CONTROL APPLICATION 8-1
Introduction 8-1
Control Input/Output 8-3
Parameter Lists 8-5
Monitoring Values (Control Keypad: Menu M1) 8-6
CHAPTER 9 — DESCRIPTION OF PARAMETERS 9-1
Basic Parameters 9-1
Input Signals 9-6
Output Signals 9-10
Drive Control 9-16
Prohibit Frequencies 9-19

Table of Contents (Continued)

Motor Control 9-21
Protections 9-23
Auto Restart Parameters 9-31
PID Reference Parameters 9-33
Pump and Fan Control 9-40
Keypad Control Parameters 9-49
Control Signal Logic 9-50

APPENDIX A — FAULT CODES A-1

APPENDIX B — EXPANDER BOARD OPTAA B-1
Description of Expander Board OPTAA B-1
I/O Terminals on OPTAA B-1

APPENDIX C — EXPANDER BOARD OPTAI C-1
Description of Expander Board OPTAI C-1
I/O Terminals on OPTAI C-1

APPENDIX D — OPTION BOARD KITS D-1
230V, FR7 – FR8 460V and 575V Drives D-1

List of Figures

Figure 1-1: SLX9000 Block Diagram 1-3
Figure 2-1: NEMA Type 1 and NEMA Type 12 SLX9000 Drive Dimensions, MF4 – MF6 2-2
Figure 2-2: SLX9000 Dimensions, NEMA Type 1 and NEMA Type 12 with Flange Kit, MF4 – MF6 2-3
Figure 2-3: SLX9000 Dimensions, NEMA Type 1 and NEMA Type 12 with Flange Opening, MF4 – MF6 2-4
Figure 2-4: SLX9000 Dimensions, NEMA Type 1 and NEMA Type 12, FR7 2-5
Figure 2-5: SLX9000 Dimensions, NEMA Type 1 and NEMA Type 12, FR8 2-6
Figure 2-6: SLX9000 Dimensions, NEMA Types 1 and 12, FR7 and FR8 with Flange Kit 2-7
Figure 2-7: SLX9000 Dimensions, NEMA Types 1 and 12, FR7 and FR8 with Flange Opening 2-8
Figure 2-8: Installation Space 2-9
Figure 2-9: Changing of EMC Protection Class, MF4 (left) and MF5 (right), 460V 2-10
Figure 2-10: Changing of EMC Protection Class, MF6 2-10
Figure 3-1: Power Connections, MF4 – MF6 3-1
Figure 3-2: FR7 Power and Motor Wiring Terminals 3-1
Figure 3-3: FR8 Power and Motor Wiring Terminals 3-2
Figure 3-4: Cable Accessories 3-5
Figure 3-5: Stripping of Cables 3-9
Figure 3-6: SLX9000, MF4 3-10
Figure 3-7: Cable Installation in SLX9000, MF4 3-10
Figure 3-8: SLX9000, MF5 3-11
Figure 3-9: Cable Installation in SLX9000, MF5 3-11
Figure 3-10: SLX9000, MF6 3-12
Figure 3-11: Cable Installation in SLX9000, MF6 3-12
Figure 3-12: SLX9000, FR7 3-13
Figure 3-13: Cable Installation in SLX9000, FR7 3-13
Figure 3-14: SLX9000, FR8 3-14
Figure 3-15: Cable Installation in SLX9000, FR8 3-14
Figure 4-1: Option Board Slots D and E in Frames MF4 – MF6 4-1
Figure 4-2: Option Board Slots 4-2
Figure 4-3: Control Connections, MF4 – MF6 460V 4-2
Figure 4-4: Jumper Selection for SLX9000, MF4 – MF6 4-7
Figure 4-5: Location of Jumper Blocks in the Control Board of MF4 – MF6, 460V 4-8
Figure 4-6: Motor Thermistor (PTC) Connection 4-9
Figure 5-1: Control Keypad and Drive Status Indications 5-1
Figure 5-2: Keypad Pushbuttons 5-3
Figure 5-3: Keypad Display Data 5-4
Figure 5-4: Keypad Navigation Chart 5-5
Figure 5-5: Monitoring Menu 5-7
Figure 5-6: Parameter Value Change Procedure 5-9
Figure 5-7: Selection of Control Place 5-10
Figure 5-8: Normal State, No Faults 5-11
Figure 5-9: Fault Display 5-12
Figure 5-10: Fault History Menu 5-12
Figure 5-11: Storing and Loading of Parameter Sets 5-15
Figure 5-12: Parameter Locking 5-16

List of Figures (Continued)

Figure 5-13: Default Page Function 5-17
Figure 5-14: Timeout Time Setting 5-17
Figure 5-15: HMI Acknowledge Timeout 5-19
Figure 5-16: MWh Counter Reset 5-20
Figure 5-17: Expander Board Information Menu 5-22
Figure 5-18: Modbus Interface 5-22
Figure 6-1: SLX9000 Start-Up Wizard 6-4
Figure 9-1: Jumper Selections of X4/X8 When AI1 Functions as DIN4 9-6
Figure 9-2: AI1 Signal Selection 9-7
Figure 9-3: AI1 Signal Filtering 9-8
Figure 9-4: Without (Left) and With (Right) Reference Scaling 9-10
Figure 9-5: Analog Output Filtering 9-12
Figure 9-6: Analog Output Invert 9-13
Figure 9-7: Analog Output Scaling 9-14
Figure 9-8: Output Frequency Supervision 9-15
Figure 9-9: Relay Output 1 ON- and OFF-Delays 9-16
Figure 9-10: Acceleration/Deceleration (S-Shaped) 9-16
Figure 9-11: DC-Braking Time When Stop Mode = Coasting 9-18
Figure 9-12: DC-Braking Time When Stop Mode = Ramp 9-18
Figure 9-13: DC Braking Time at Start 9-19
Figure 9-14: Prohibit Frequency Area Setting 9-20
Figure 9-15: Ramp Speed Scaling Between Prohibit Frequencies 9-20
Figure 9-16: Linear and Squared Change of Motor Voltage 9-21
Figure 9-17: Programmable VHz Curve 9-22
Figure 9-18: Motor Cooling Power 9-26
Figure 9-19: Motor Temperature Calculation 9-27
Figure 9-20: Stall Characteristics Settings 9-28
Figure 9-21: Stall Time Count 9-28
Figure 9-22: Setting of Minimum Load 9-30
Figure 9-23: Underload Time Counter Function 9-30
Figure 9-24: Automatic Restart 9-32
Figure 9-25: PID Controller Function as I-Controller 9-34
Figure 9-26: PID Output Curve with the Values of Example 2 9-35
Figure 9-27: PID Output with the Values of Example 3 9-36
Figure 9-28: Example of Actual Value Signal Scaling 9-37
Figure 9-29: Sleep Function 9-38
Figure 9-30: 3-Pump Autochange System, Principal Control Diagram 9-43
Figure 9-31: Example of 3-Pump Autochange, Main Diagram 9-43
Figure 9-32: 2-Pump Autochange System, Principal Control Diagram 9-45
Figure 9-33: Example of 2-Pump Autochange, Main Diagram 9-45
Figure 9-34: Autochange Applied to Auxiliary Drives Only 9-46
Figure 9-35: Autochange with All Drives 9-47
Figure 9-36: Autochange Interval and Limits 9-48
Figure 9-37: Control Signal Logic of the Multi-Control Application 9-50
Figure B-1: Expander Board OPTAA B-1
Figure C-1: Expander Board OPTAI C-1
Figure D-1: Option Boards D-1

List of Tables

Table 1-1: SLX9000 AF Drive Catalog Numbering System 1-1
Table 1-2: 208 – 240V, NEMA Type 1 Power Ratings 1-4
Table 1-3: 208 – 240V, NEMA Type 12 Power Ratings 1-4
Table 1-4: 380 – 500V, NEMA Type 1 Power Ratings 1-5
Table 1-5: 380 – 500V, NEMA Type 12 Power Ratings 1-5
Table 1-6: 525 – 690V, NEMA Type 1 Power Ratings 1-6
Table 1-7: 525 – 690V, NEMA Type 12 Power Ratings 1-6
Table 1-8: Technical Information 1-7
Table 2-1: SLX9000 Drive Dimensions 2-2
Table 2-2: Dimensions for SLX9000, MF4 – MF6 with Flange Kit 2-3
Table 2-3: Dimensions for the Flange Opening, MF4 – MF6 2-4
Table 2-4: SLX9000 Dimensions, FR7 2-5
Table 2-5: SLX9000 Dimensions, FR8 2-6
Table 2-6: SLX9000 Dimensions, NEMA Types 1 and 12, FR7 and FR8 with Flange Kit 2-7
Table 2-7: SLX9000 Dimensions, NEMA Types 1 and 12, for the Flange Opening, FR7/FR8 2-8
Table 2-8: Mounting Space Dimensions 2-9
Table 2-9: Required Cooling Air 2-9
Table 3-1: Cable Types Required to Meet Standards 3-3
Table 3-2: Cable and Fuse Sizes – 230V Ratings 3-3
Table 3-3: Cable and Fuse Sizes – 480V Ratings 3-4
Table 3-4: Cable and Fuse Sizes – 575V Ratings 3-4
Table 3-5: Mounting Procedure 3-6
Table 3-6: Cable Spacings 3-8
Table 3-7: Cable Stripping Lengths 3-9
Table 3-8: Tightening Torques of Terminals 3-15
Table 4-1: Multi-Control Application Default Input/Output Configuration, MF4 – MF6 460V 4-3
Table 4-2: AI1 Configuration, When Programmed as DIN4, MF4 – MF6 460V 4-3
Table 4-3: Default I/O Configuration, All 230V, FR7 – FR8 460V and All 575V 4-4
Table 4-4: Control Input/Output Terminal Signals, MF4 – MF6 460V 4-5
Table 4-5: Option Board A9 Terminal Descriptions, All 230V, FR7 – FR8 460V and All 575V 4-6
Table 4-6: Option Board A2 Terminal Descriptions, All 230V, FR7 – FR8 460V and All 575V 4-7
Table 5-1: Drive Status Indicators 5-2
Table 5-2: Control Place Indicators 5-2
Table 5-3: Button Descriptions 5-3
Table 5-4: Main Menu Functions 5-6
Table 5-5: Monitored Signals 5-8
Table 5-6: Keypad Control Menu Selections 5-10
Table 5-7: Fault Types 5-12
Table 5-8: System Menu Functions 5-13
Table 5-9: Counter Pages 5-19
Table 5-10: Trip Counter Pages 5-20
Table 5-11: Software Information Pages 5-20
Table 5-12: Application Information Pages 5-21
Table 5-13: Hardware Information Pages 5-21
Table 5-14: Connected Options Submenu 5-21

List of Tables (Continued)

Table 5-15: Modbus Commands Supported by SLX9000 5-23
Table 5-16: Output Process Data 5-24
Table 5-17: Input Process Data 5-24
Table 5-18: Status Word 5-24
Table 5-19: Actual Speed 5-24
Table 5-20: Control Word 5-25
Table 5-21: Speed Reference 5-25
Table 5-22: Bit Definitions 5-25
Table 7-1: Monitoring Values 7-2
Table 7-2: Basic Parameters (Control Keypad: Menu P2 → B2.1) 7-3
Table 8-1: Multi-Control Application Default Input/Output Configuration, MF4 – MF6 460V 8-3
Table 8-2: AI1 Configuration, When Programmed as DIN4 8-3
Table 8-3: Default I/O Configuration, All 230V, FR7 – FR8 460V and All 575V 8-4
Table 8-4: Monitoring Values 8-6
Table 8-5: Basic Parameters P2.1 8-7
Table 8-6: Input Signals, P2.2 8-9
Table 8-7: Output Signals, G2.3 8-11
Table 8-8: Drive Control Parameters, P2.4 8-12
Table 8-9: Prohibit Frequency Parameters, P2.5 8-12
Table 8-10: Motor Control Parameters, P2.6 8-13
Table 8-11: Protections, P2.7 8-13
Table 8-12: Autorestart Parameters, P2.8 8-14
Table 8-13: PID Reference Parameters, P2.9 8-15
Table 8-14: Pump and Fan Control Parameters, P2.10 8-16
Table 8-15: Keypad Control Parameters, K3 8-16
Table 9-1: Output Signals via RO1 and Expander Board RO1, RO2 and DO1 9-11
Table 9-2: Analog Output Scaling 9-14
Table 9-3: Selectable Wake-Up Functions 9-39
Table 9-4: PFC-Control Input/Output Configuration with Three Pumps, MF4 – MF6 460V 9-42
Table 9-5: PFC-Control Input/Output Configuration with Two Pumps, MF4 – MF6 460V 9-44
Table A-1: Fault Codes A-1
Table B-1: I/O Terminals of Board OPTAA B-1
Table C-1: I/O Terminals of Board OPTAI C-1
Table D-1: Option Board Kits D-1

Safety

Definitions and Symbols

⚠ WARNING

This symbol indicates high voltage. It calls your attention to items or operations that could be dangerous to you and other persons operating this equipment. Read the message and follow the instructions carefully.

⚠

This symbol is the "Safety Alert Symbol." It occurs with either of two signal words: CAUTION or WARNING, as described below.

⚠ WARNING

Indicates a potentially hazardous situation which, if not avoided, can result in serious injury or death.

⚠ CAUTION

Indicates a potentially hazardous situation which, if not avoided, can result in minor to moderate injury, or serious damage to the product. The situation described in the CAUTION may, if not avoided, lead to serious results. Important safety measures are described in CAUTION (as well as WARNING).

Hazardous High Voltage

⚠ WARNING

Motor control equipment and electronic controllers are connected to hazardous line voltages. When servicing drives and electronic controllers, there may be exposed components with housings or protrusions at or above line potential. Extreme care should be taken to protect against shock.

Stand on an insulating pad and make it a habit to use only one hand when checking components. Always work with another person in case an emergency occurs. Disconnect power before checking controllers or performing maintenance. Be sure equipment is properly grounded. Wear safety glasses whenever working on electronic controllers or rotating machinery.

January 2009

Warnings, Cautions and Notices

Read this manual thoroughly and make sure you understand the procedures before you attempt to install, set up, or operate this Cutler-Hammer® SLX9000 Adjustable Frequency Drive from Eaton's electrical business.

Warnings

⚠ WARNING

Only a competent electrician may carry out the electrical installation.

⚠ WARNING

The components of the power unit of the drive are live when the SLX9000 drive is connected to power supply. Coming into contact with this voltage is extremely dangerous and may cause death or severe injury. The control unit is isolated from mains potential.

⚠ WARNING

The motor terminals U, V, W (T1, T2, T3) and the DC-link/brake resistor terminals -/+ (in SLX9000 ≥1.1 kW) are **live** when drive is connected to mains, **even if the motor is not running**. Contact with this voltage is extremely dangerous and may cause death or severe injury.

⚠ WARNING

The control I/O-terminals are isolated from the mains potential. However, the relay outputs and other I/O-terminals may have dangerous control voltage present even when the drive is disconnected from the power supply. Contact with this voltage is extremely dangerous and may cause death or severe injury.

⚠ WARNING

The drive has a large capacitive leakage current. Proper grounding is required. Failure to observe this precaution could result in death or severe injury.

⚠ WARNING

If the drive is used as a part of a machine, the machine manufacturer is responsible for providing the machine with a main switch (EN 60204-1).

⚠ WARNING

Only spare parts delivered by Eaton can be used.

⚠ WARNING

If the motor thermistor is connected to DIN3, the instructions on **Page 4-9 must be** followed, otherwise a serious safety hazard may result from the connection.

Cautions

⚠ CAUTION

The SLX9000 drive is meant for fixed installations only.

⚠ CAUTION

Do not perform any measurements when the drive is connected to the power supply.

⚠ CAUTION

After having disconnected the drive from the power supply, wait until the fan stops and the indicators on the keypad go out (if no keypad is attached see the indicator through the keypad base). Wait 5 more minutes before doing any work on drive connections.

⚠ CAUTION

Do not perform any voltage withstand tests on any part of drive. There is a certain procedure according to which the tests shall be performed. Ignoring this procedure may result in damaged product.

⚠ CAUTION

Prior to measurements on the motor or the motor cable, disconnect the motor cable from the drive.

⚠ CAUTION

Do not touch the IC-circuits on the circuit boards. Static voltage discharge may damage the components.

⚠ CAUTION

Check the correct positions of the jumpers. Running the motor with signal settings different from the jumper positions will not harm the drive but may damage the motor.

⚠ CAUTION

The calculated model does not protect the motor if the airflow to the motor is reduced by blocked air intake grill.

Grounding and ground fault protection

The SLX9000 drive must always be grounded with a ground conductor connected to the ground terminal.

The ground fault protection inside the drive only protects the drive itself against ground faults in the motor or the motor cable.

Due to the high capacity currents present in the drive, fault current protective switches may not function properly. If fault current protective switches are used, they need to be tested with ground fault currents present during possible fault situations.

Motor and Equipment Safety

⚠ CAUTION

Before starting the motor, check that the motor is mounted properly and ensure that the machine connected to the motor allows the motor to be started.

⚠ CAUTION

Set the maximum motor speed (frequency) according to the motor and the machine connected to it.

⚠ CAUTION

Before reversing the motor, make sure that this can be done safely.

⚠ CAUTION

Make sure that no power correction capacitors are connected to the motor cable.

⚠ CAUTION

Make sure that the motor terminals are not connected to mains potential.

January 2009

Chapter 1 — Overview

Receiving and Inspection

Cutler-Hammer® SLX9000 Adjustable Frequency Drives User Manual

SLX9000 Adjustable Frequency Drives User Manual

SLX9000 Adjustable Frequency Drives User Manual from Eaton's electrical business have undergone scrupulous tests and quality checks at the factory before they are delivered to the customer. However, after unpacking the product, check that no signs of transport damages are to be found on the product and that the delivery is complete (compare the catalog number of the product to the code below, see **Table 1-1**).

If the drive has been damaged during shipping, please contact the cargo insurance company or the carrier.

If the delivery does not correspond to your order, contact the supplier immediately.

Table 1-1: SLX9000 AF Drive Catalog Numbering System

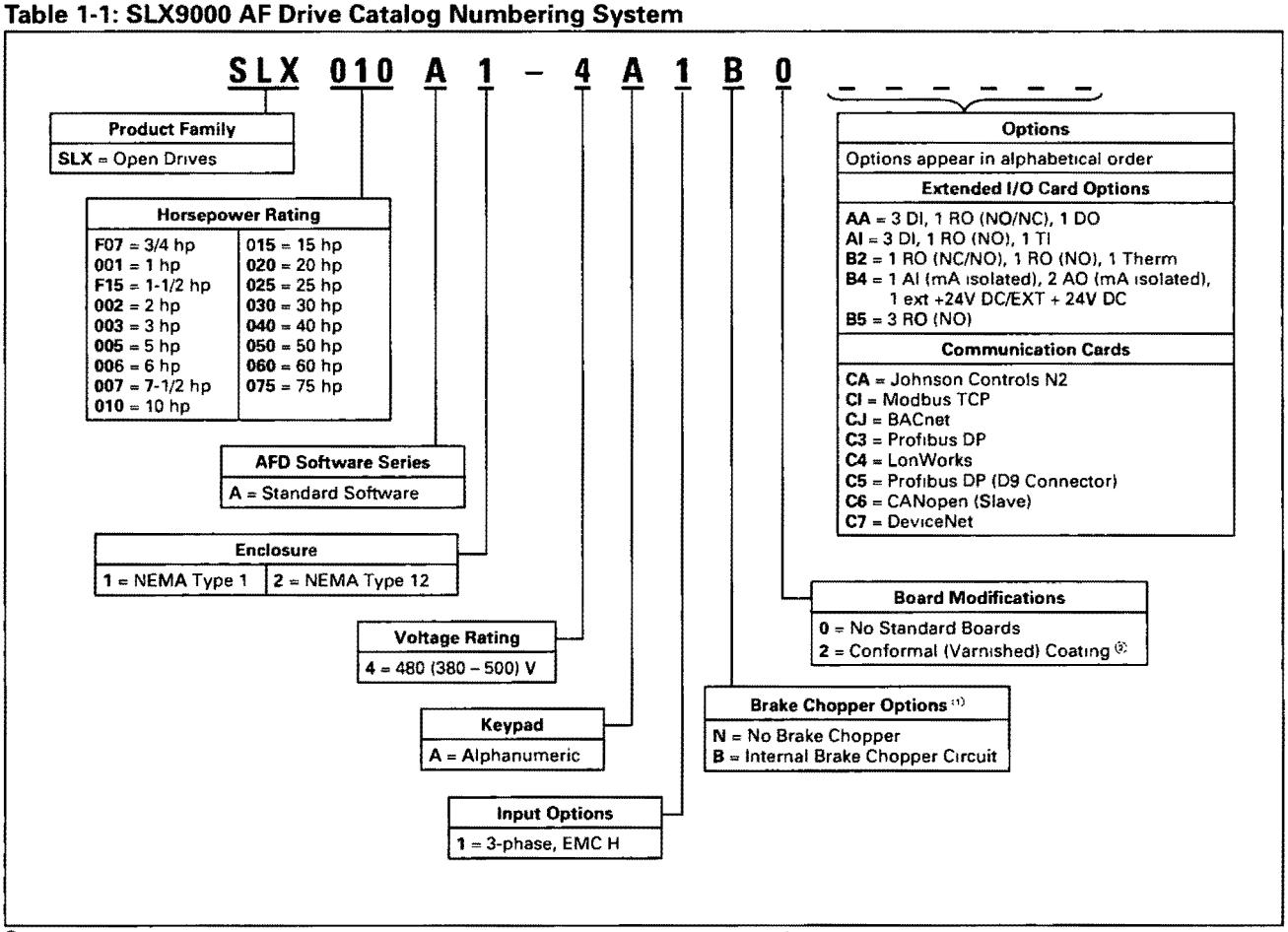

① 230V Drives up to 15 hp (I_H) and 480V Drives up to 30 hp (I_H) are only available with Brake Chopper Option **B**. All others come with Brake Chopper Option **N** as standard.

② Factory promise delivery. Consult Sales Office for availability

Storage

If the drive is to be kept in storage before use, make sure that the ambient conditions are acceptable:

Storing temperature: -40 to 158°F (-40 to 70°C)
Relative humidity: <95%, no condensation

Maintenance

In normal conditions, Cutler-Hammer drives are maintenance-free. However, we recommend to clean the heatsink (using e.g. a small brush) whenever necessary. Most drives are equipped with a cooling fan, which can easily be changed if necessary.

Technical Data

SLX9000 is a compact drive with ratings ranging from 3/4 to 75 hp. It is well adapted for HVAC and OEM applications where its uses are almost unlimited.

The Motor and Application Control Block is based on microprocessor software. The microprocessor controls the motor basing on the information it receives through measurements, parameter settings, control I/O and control keypad. The IGBT Inverter Bridge produces a symmetrical, three-phase PWM-modulated AC-voltage to the motor.

The control keypad constitutes a link between the user and the drive. The control keypad is used for parameter setting, reading status data and giving control commands. Instead of the control keypad, a PC can also be used to control the drive if connected through a cable and a serial interface adapter (optional equipment).

The drive can be supplied with control I/O boards OPTAA, OPTAI, OPTB_ or OPTC_.

230V Drives up to 15 hp (I_H) and 480V Drives up to 30 hp (I_H) have an internal brake chopper. All other sizes come standard with no brake chopper. For more information, contact Eaton. The input EMC filters are internal and included as standard.

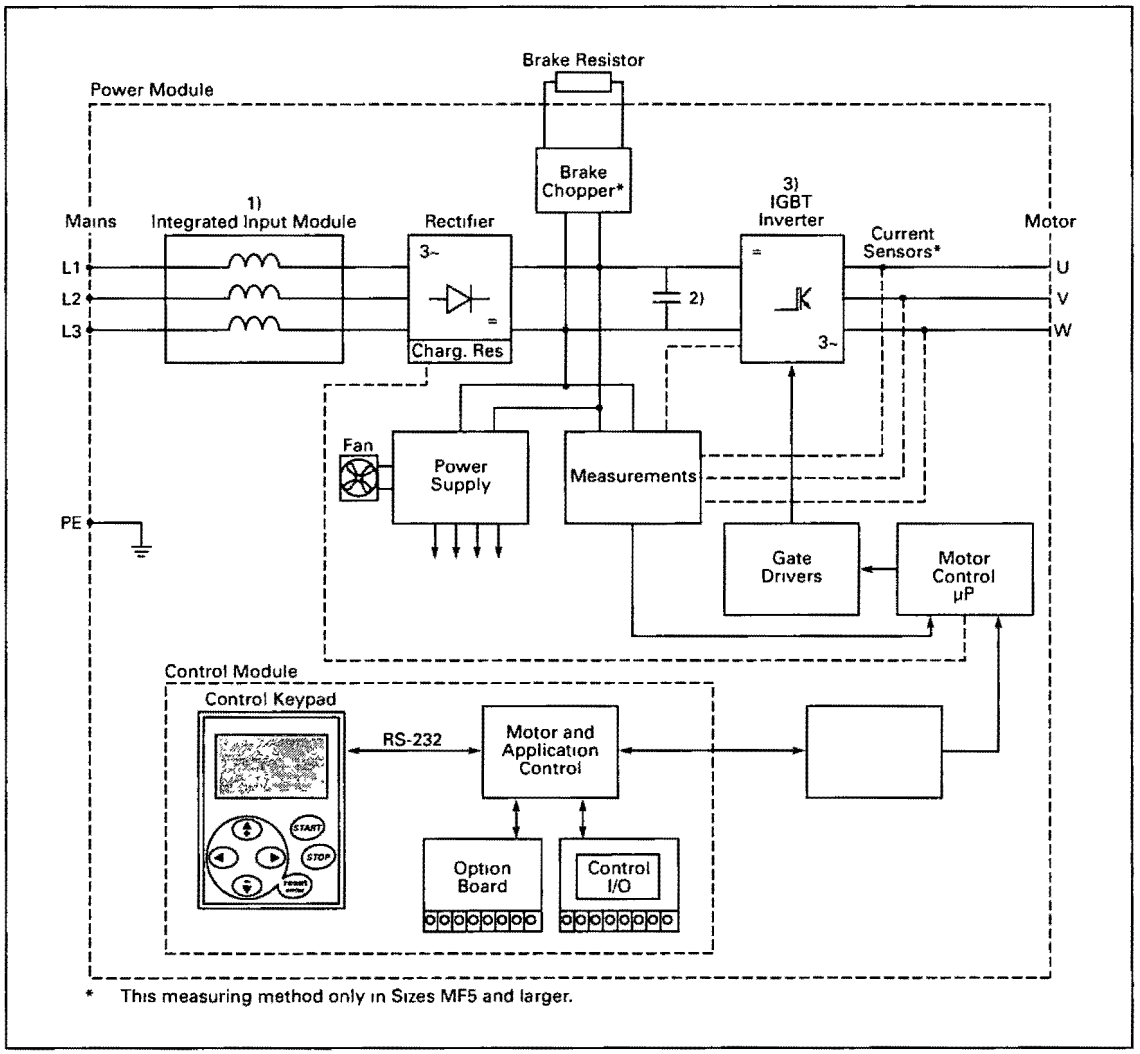

Figure 1-1: SLX9000 Block Diagram

Power Ratings

230V SLX9000 Drives

Table 1-2: 208 – 240V, NEMA Type 1 Power Ratings

Catalog Number	Frame Size	High Overload 150% (I_H)		Low Overload 110% (I_L)	
		hp	Current Rating	hp	Current Rating
SLXF07A1-2A1B0	MF4	3/4	3.7	1	4.8
SLX001A1-2A1B0		1	4.8	1-1/2	6.6
SLXF15A1-2A1B0		1-1/2	6.6	2	7.8
SLX002A1-2A1B0		2	7.8	3	11
SLX003A1-2A1B0		3	11	—	12.5
SLX004A1-2A1B0	MF5	—	12.5	5	17.5
SLX005A1-2A1B0		5	17.5	7-1/2	25
SLX007A1-2A1B0		7-1/2	25	10	31
SLX010A1-2A1B0	MF6	10	31	15	48
SLX015A1-2A1B0		15	48	20	61
SLX020A1-2A1N0	FR7	20	61	25	75
SLX025A1-2A1N0		25	75	30	88
SLX030A1-2A1N0		30	88	40	114

Table 1-3: 208 – 240V, NEMA Type 12 Power Ratings

Catalog Number	Frame Size	High Overload 150% (I_H)		Low Overload 110% (I_L)	
		hp	Current Rating	hp	Current Rating
SLXF07A2-2A1B0	MF4	3/4	3.7	1	4.8
SLX001A2-2A1B0		1	4.8	1-1/2	6.6
SLXF15A2-2A1B0		1-1/2	6.6	2	7.8
SLX002A2-2A1B0		2	7.8	3	11
SLX003A2-2A1B0		3	11	—	12.5
SLX004A2-2A1B0	MF5	—	12.5	5	17.5
SLX005A2-2A1B0		5	17.5	7-1/2	25
SLX007A2-2A1B0		7-1/2	25	10	31
SLX010A2-2A1B0	MF6	10	31	15	48
SLX015A2-2A1B0		15	48	20	61
SLX020A2-2A1N0	FR7	20	61	25	75
SLX025A2-2A1N0		25	75	30	88
SLX030A2-2A1N0		30	88	40	114

480V SLX9000 Drives

Table 1-4: 380 – 500V, NEMA Type 1 Power Ratings

Catalog Number	Frame Size	High Overload 150% (I_H)		Low Overload 110% (I_L)	
		hp	Current Rating	hp	Current Rating
SLX001A1-4A1B0	MF4	1	2.2	1-1/2	3.3
SLXF15A1-4A1B0		1-1/2	3.3	2	4.3
SLX002A1-4A1B0		2	4.3	3	5.6
SLX003A1-4A1B0		3	5.6	4	7.6
SLX005A1-4A1B0		4	7.6	5	9
SLX006A1-4A1B0		5	9	7-1/2	12
SLX007A1-4A1B0	MF5	7-1/2	12	10	16
SLX010A1-4A1B0		10	16	15	23
SLX015A1-4A1B0		15	23	20	31
SLX020A1-4A1B0	MF6	20	31	25	38
SLX025A1-4A1B0		25	38	30	46
SLX030A1-4A1B0		30	46	40	61
SLX040A1-4A1N0	FR7	40	61	50	72
SLX050A1-4A1N0		50	72	60	87
SLX060A1-4A1N0		60	87	75	105
SLX075A1-4A1N0	FR8	75	105	100	140

Table 1-5: 380 – 500V, NEMA Type 12 Power Ratings

Catalog Number	Frame Size	High Overload 150% (I_H)		Low Overload 110% (I_L)	
		hp	Current Rating	hp	Current Rating
SLX001A2-4A1B0	MF4	1	2.2	1-1/2	3.3
SLXF15A2-4A1B0		1-1/2	3.3	2	4.3
SLX002A2-4A1B0		2	4.3	3	5.6
SLX003A2-4A1B0		3	5.6	4	7.6
SLX005A2-4A1B0		4	7.6	5	9
SLX006A2-4A1B0		5	9	7-1/2	12
SLX007A2-4A1B0	MF5	7-1/2	12	10	16
SLX010A2-4A1B0		10	16	15	23
SLX015A2-4A1B0		15	23	20	31
SLX020A2-4A1B0	MF6	20	31	25	38
SLX025A2-4A1B0		25	38	30	46
SLX030A2-4A1B0		30	46	40	61
SLX040A2-4A1N0	FR7	40	61	50	72
SLX050A2-4A1N0		50	72	60	87
SLX060A2-4A1N0		60	87	75	105
SLX075A2-4A1N0	FR8	75	105	100	140

575V SLX9000 Drives

Table 1-6: 525 – 690V, NEMA Type 1 Power Ratings

Catalog Number	Frame Size	High Overload 150% (I_H)		Low Overload 110% (I_L)	
		hp	Current Rating	hp	Current Rating
SLX002A1-5A1N0	MF6	2	3.33	3	4.5
SLX003A1-5A1N0		3	4.5	—	5.5
SLX004A1-5A1N0		—	5.5	5	7.5
SLX005A1-5A1N0		5	7.5	7-1/2	10
SLX007A1-5A1N0		7-1/2	10	10	13.5
SLX010A1-5A1N0		10	13.5	15	18
SLX015A1-5A1N0		15	18	20	22
SLX020A1-5A1N0		20	22	25	27
SLX025A1-5A1N0		25	27	30	34
SLX030A1-5A1N0	FR7	30	34	40	41
SLX040A1-5A1N0		40	41	50	52
SLX050A1-5A1N0	FR8	50	52	60	62
SLX060A1-5A1N0		60	62	75	80
SLX075A1-5A1N0		75	80	100	100

Table 1-7: 525 – 690V, NEMA Type 12 Power Ratings

Catalog Number	Frame Size	High Overload 150% (I_H)		Low Overload 110% (I_L)	
		hp	Current Rating	hp	Current Rating
SLX002A2-5A1N0	MF6	2	3.33	3	4.5
SLX003A2-5A1N0		3	4.5	—	5.5
SLX004A2-5A1N0		—	5.5	5	7.5
SLX005A2-5A1N0		5	7.5	7-1/2	10
SLX007A2-5A1N0		7-1/2	10	10	13.5
SLX010A2-5A1N0		10	13.5	15	18
SLX015A2-5A1N0		15	18	20	22
SLX020A2-5A1N0		20	22	25	27
SLX025A2-5A1N0		25	27	30	34
SLX030A2-5A1N0	FR7	30	34	40	41
SLX040A2-5A1N0		40	41	50	52
SLX050A2-5A1N0	FR8	50	52	60	62
SLX060A2-5A1N0		60	62	75	80
SLX075A2-5A1N0		75	80	100	100

Table 1-8: Technical Information

Description	Specification
Mains Connection	
Input Voltage V_{in}	208 – 240V; -15% to +10% three-phase 380 – 500V; -15% to +10% three-phase 525 – 690V; -15% to +10% three-phase
Input Frequency	45 – 66 Hz
Connection to Mains	Once per minute or less (typical application)
Motor Connection	
Output Voltage	0 – V_{in}
Continuous Output Current	I_H: Ambient temperature max. 122°F (+50°C), overload 1.5 x I_H (1 min./10 min.) I_L: Ambient temperature max. 104°F (+40°C), overload 1.1 x I_L (1 min./10 min.)
Starting Torque	150% (Low overload); 200% (High overload)
Starting Current	2 x IH 2 secs every 20 secs, if output frequency <30 Hz and temperature of heatsink <+60°C
Output Frequency	0 – 320 Hz
Frequency Resolution	.01 Hz
Control Characteristics	
Control Method	Frequency control V/f Open Loop Sensorless Vector Control
Switching Frequency (See Parameter 2.6.8)	208 – 230V: 3/4 – 15 hp: 1 to 16 kHz; default 10 kHz 20 – 30 hp: 1 to 10 kHz; default 3.6 kHz 380 – 500V: 1 – 30 hp: 1 to 16 kHz; default 10 kHz 40 – 60 hp: 1 to 10 kHz; default 3.6 kHz 525 – 690V: All Sizes: 1 to 6 kHz; default 1.5 kHz
Frequency Reference – Analog Input – Keypad Reference	 Resolution .1% (10-bit), accuracy ±1% Resolution .01 Hz
Field Weakening Point	30 – 320 Hz
Acceleration Time	.1 – 3000 sec.
Deceleration Time	.1 – 3000 sec.
Braking Torque	DC brake: 30%*T_N (without brake option)
Ambient Conditions	
Ambient Operating Temperature	14°F (-10°C) (no frost) to 122°F (50°C): I_H 14°F (-10°C) (no frost) to 104°F (40°C): I_L
Storage Temperature	-40 to 158°F (-40 to 70°C)
Relative Humidity	0 – 95% RH, non-condensing, non-corrosive, no dripping water
Air Quality: – Chemical Vapors – Mechanical Particles	 IEC 721-3-3, unit in operation, class 3C2 IEC 721-3-3, unit in operation, class 3S2
Altitude	100% load capacity (no derating) up to 3300 ft. (1000m) 1-% derating for each 330 ft. (100m) above 3300 ft. (1000m); max. 10000 ft. (3000m)

Table 1-8: Technical Information (Continued)

Description	Specification
Ambient Conditions (Continued)	
Vibration EN 50178/EN 60068-2-6	5 – 150 Hz Displacement amplitude 1 mm (peak) at 5 – 15.8 Hz Max acceleration amplitude 1G at 15.8 – 150 Hz
Shock EN 50178, IEC 68-2-27	UPS Drop Test (for applicable UPS weights) Storage and shipping: max 15G, 11 mS (in package)
Enclosure Class	NEMA Type 1/IP21 or NEMA Type 12/IP54
EMC	
Immunity	Complies with EN 50082-1, -2, EN 61800-3
Emissions	**MF4 – MF6:** EMC-level H: EN 61800-3 (1996)+A11 (2000) 1. environment, restricted use; 2. environment
Safety	
	EN 50178, EN 60204-1, CE, UL, cUL, FI, GOST R, IEC 61800-5 (see unit nameplate for more detailed approvals)
Control Connections	
Analog Input Voltage	0 – 10V, R_i = 200 kΩ, Resolution 10 bit, accuracy ±1%
Analog Input Current	0(4) – 20 mA, R_i = 250Ω differential
Digital Inputs	3 positive logic; 18 – 24V DC
Auxiliary Voltage	+24V, ±15%, max. 100 mA
Output Reference Voltage	+10V, +3%, max. load 10 mA
Analog Output	0(4) – 20 mA; R_L max. 500Ω; Resolution 16 bit; Accuracy ±1%
Relay Outputs	1 programmable change-over relay output Switching capacity: 24V DC/8A, 250V AC/8A, 125V DC/.4A
Protections	
Overvoltage Protection	Yes
Undervoltage Protection	Yes
Ground Fault Protection	In case of ground fault in motor or motor cable, only the drive is protected
Unit Overtemperature Protection	Yes
Motor Overload Protection	Yes
Motor Stall Protection	Yes
Motor Underload Protection	Yes
Short Circuit Protection of +24V and +10V Reference Voltages	Yes
Overcurrent Protection	Trip limit 4.0*I_H instantaneously

January 2009

Chapter 2 — Installation

Mounting

Standard Mounting Instructions

1. Measure the mounting space to ensure that it allows for the minimum space surrounding the drive. See dimension tables and **Table 2-8**.
2. Make sure the mounting surface is flat and strong enough to support the drive, is not flammable, and is not subject to excessive motion or vibration.
3. Ensure that the minimum airflow requirements for your drive are met at the mounting location. See **Table 2-9**.
4. Mark the location of the mounting holes on the mounting surface, using the template provided on the cover of the cardboard shipping package.
5. Using fasteners appropriate to your drive and mounting surface, securely attach the drive to the mounting surface using all 4 screws or bolts.

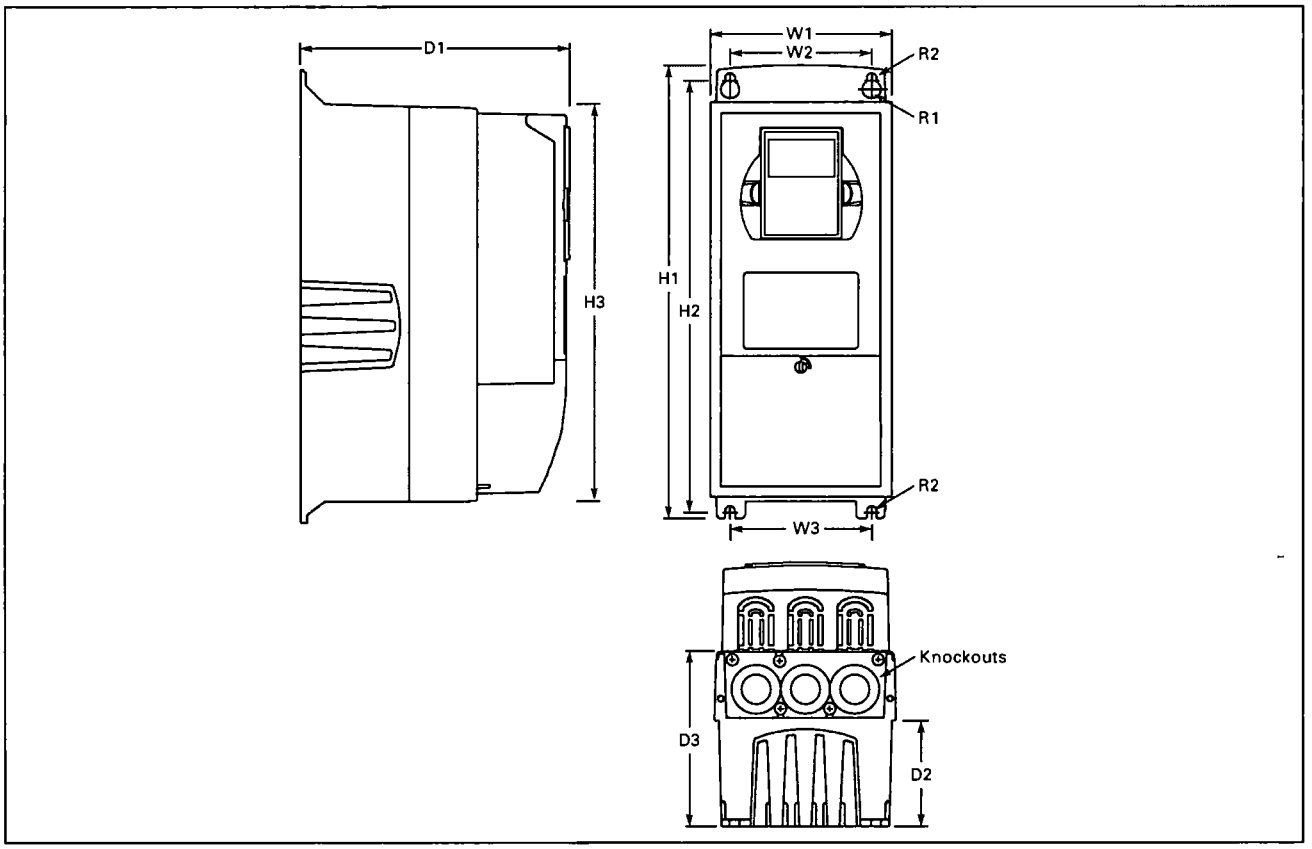

Figure 2-1: NEMA Type 1 and NEMA Type 12 SLX9000 Drive Dimensions, MF4 – MF6

Table 2-1: SLX9000 Drive Dimensions

Voltage	hp (I_H)	Approximate Dimensions in Inches (mm)											Wt. Lbs. (kg)	Knockouts @ Inches (mm)
		H1	H2	H3	D1	D2	D3	W1	W2	W3	R1 dia.	R2 dia.		N1 (O.D.)
Frame Size — MF4														
230	3/4 – 3	12.9 (327)	12.3 (313)	11.5 (292)	7.5 (190)	3.0 (77)	5.0 (126)	5.0 (128)	3.9 (100)	—	.5 (13)	.3 (7)	11.0 (5)	3 @ 1.1 (28)
480	1 – 5													
Frame Size — MF5														
230	5 – 7-1/2	16.5 (419)	16.0 (406)	15.3 (389)	8.4 (214)	3.9 (100)	5.8 (148)	5.6 (143)	3.9 (100)	—	.5 (13)	.3 (7)	17.9 (8)	2 @ 1.5 (37) 1 @ 1.1 (28)
480	7-1/2 – 15													
Frame Size — MF6														
230	10 – 15	22.0 (558)	21.3 (541)	20.4 (519)	9.3 (237)	4.2 (105)	6.5 (165)	7.6 (195)	5.8 (148)	—	.6 (15.5)	.4 (9)	40.8 (19)	3 @ 1.5 (37)
480	20 – 30													
575	2 – 25													

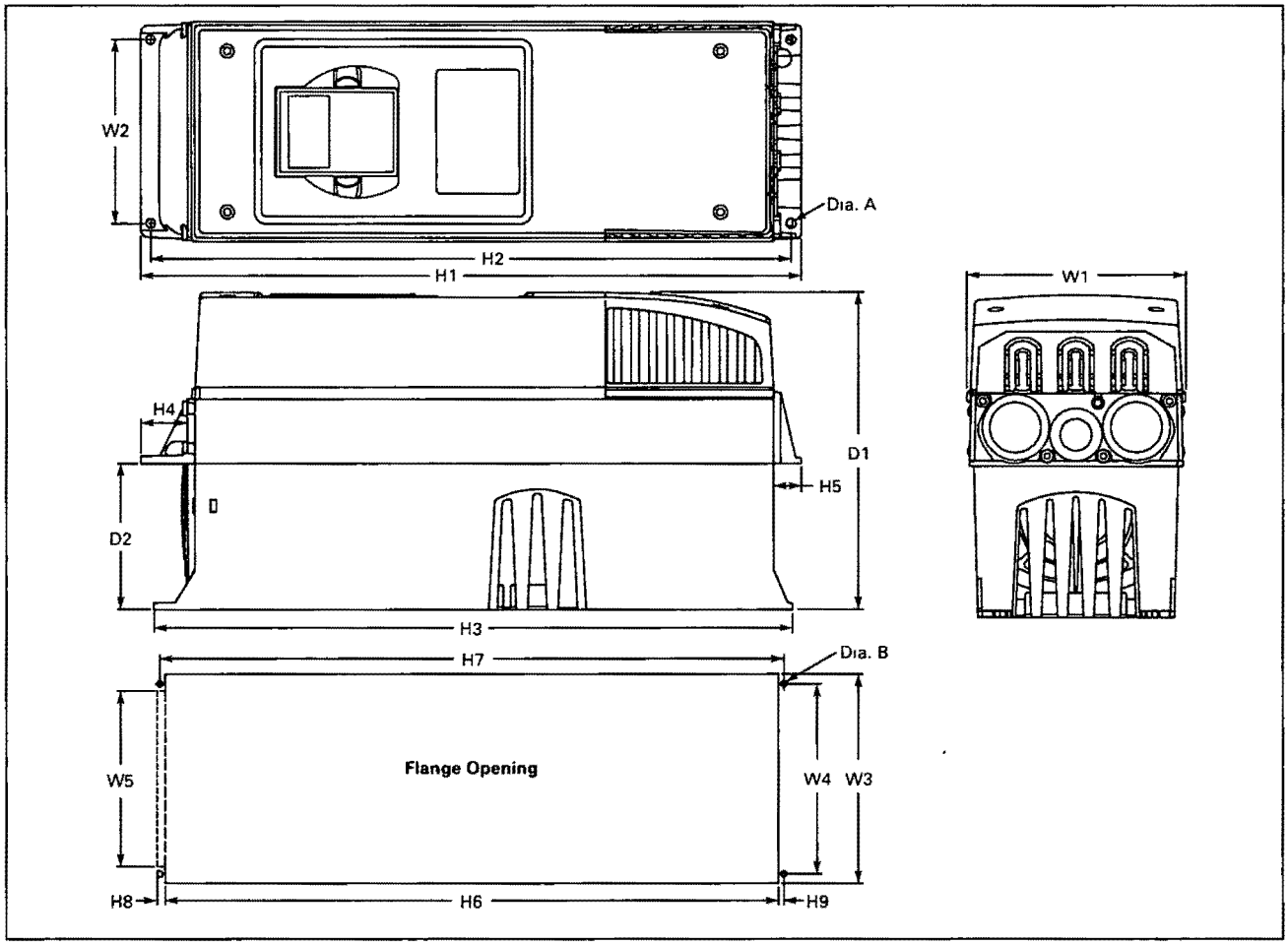

Figure 2-2: SLX9000 Dimensions, NEMA Type 1 and NEMA Type 12 with Flange Kit, MF4 – MF6

Table 2-2: Dimensions for SLX9000, MF4 – MF6 with Flange Kit

		Approximate Dimensions in Inches (mm)									
Voltage	**hp (I_H)**	**W1**	**W2**	**H1**	**H2**	**H3**	**H4**	**H5**	**D1**	**D2**	**Dia. A**
Frame Size — MF4											
230	3/4 – 3	5.0 (128)	4.5 (113)	13.3 (337)	12.8 (325)	12.9 (327)	1.2 (30)	.9 (22)	7.5 (190)	3.0 (77)	.3 (7)
480	1 – 5										
Frame Size — MF5											
230	5 – 7-1/2	5.6 (143)	4.7 (120)	17.0 (434)	16.5 (420)	16.5 (419)	1.4 (36)	.7 (18)	8.4 (214)	3.9 (100)	.3 (7)
480	7-1/2 – 15										
Frame Size — MF6											
230	10 – 15	7.7 (195)	6.7 (170)	22.0 (560)	21.6 (549)	22.0 (558)	1.2 (30)	.8 (20)	9.3 (237)	4.2 (106)	.3 (7)
480	20 – 30										
575	2 – 25										

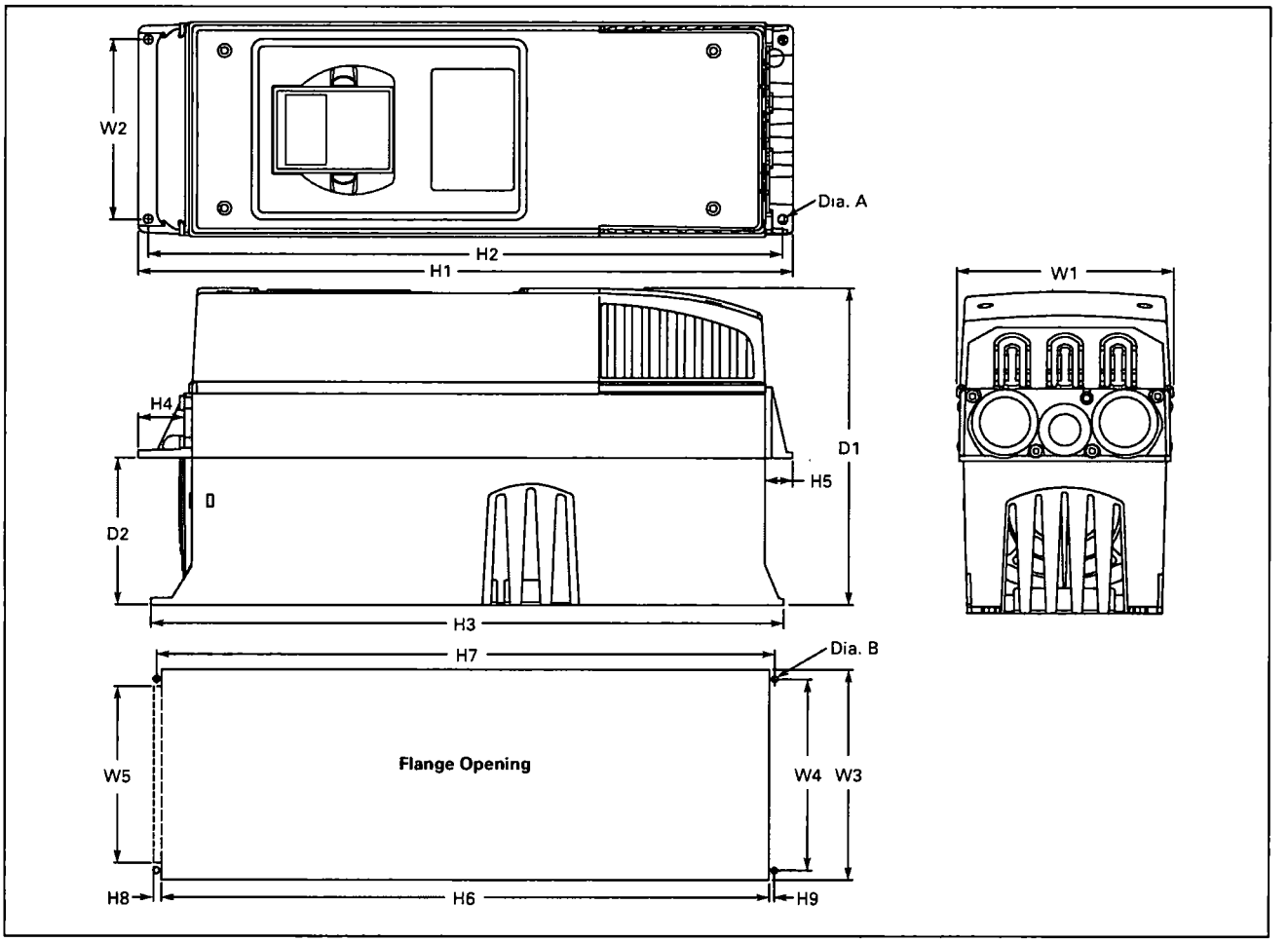

Figure 2-3: SLX9000 Dimensions, NEMA Type 1 and NEMA Type 12 with Flange Opening, MF4 – MF6

Table 2-3: Dimensions for the Flange Opening, MF4 – MF6

		Approximate Dimensions in Inches (mm)							
Voltage	**hp (I_H)**	**W3**	**W4**	**W5**	**H6**	**H7**	**H8**	**H9**	**Dia. B**
Frame Size — MF4									
230	3/4 – 3	4.8 (123)	4.5 (113)	—	12.4 (315)	12.8 (325)	—	.2 (5)	.3 (7)
480	1 – 5								
Frame Size — MF5									
230	5 – 7-1/2	5.3 (135)	4.7 (120)	—	16.2 (410)	16.5 (420)	—	.2 (5)	.3 (7)
480	7-1/2 – 15								
Frame Size — MF6									
230	10 – 15	7.3 (185)	6.7 (170)	6.2 (157)	21.2 (539)	21.6 (549)	.3 (7)	.2 (5)	.3 (7)
480	20 – 30								
575	2 – 25								

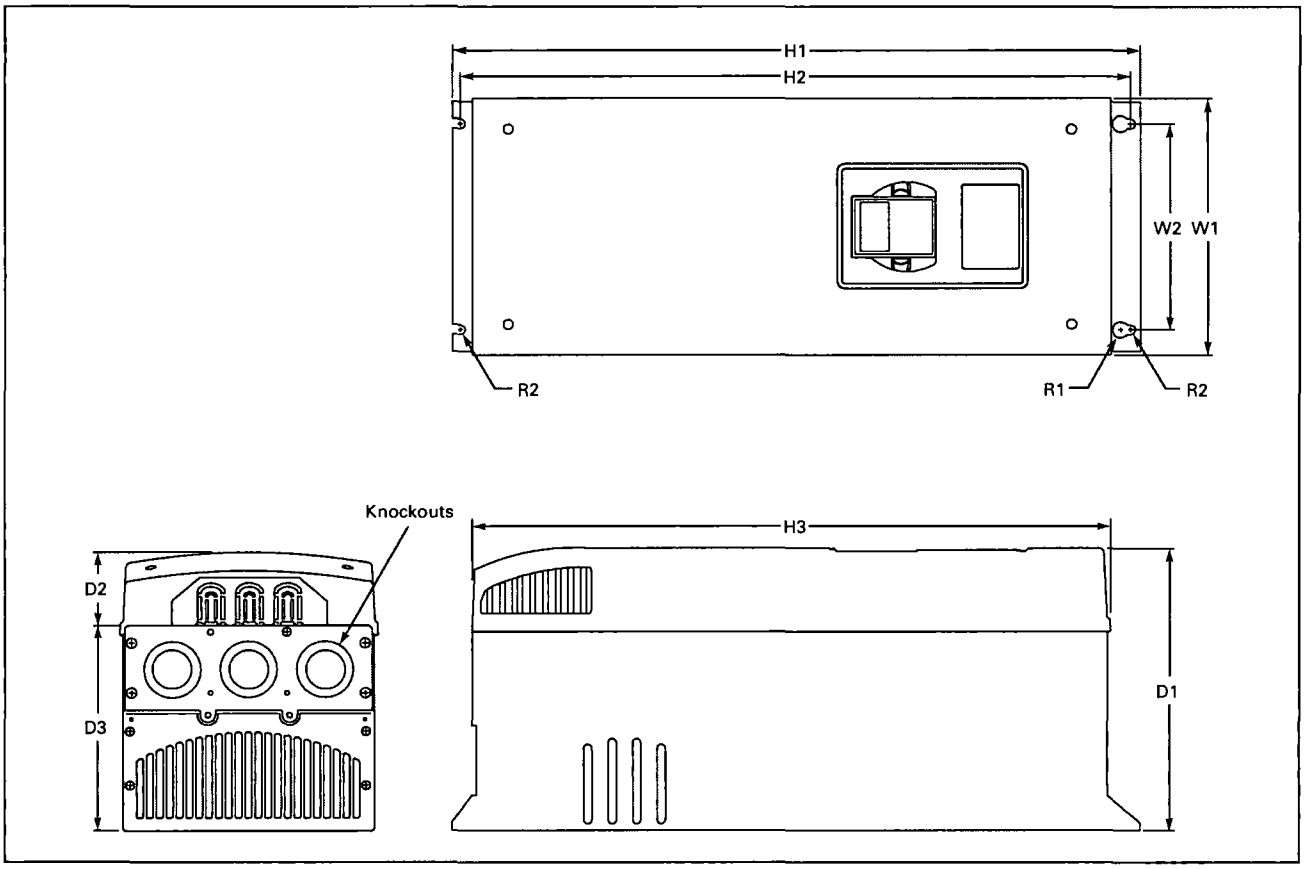

Figure 2-4: SLX9000 Dimensions, NEMA Type 1 and NEMA Type 12, FR7

Table 2-4: SLX9000 Dimensions, FR7

Voltage	hp (I_H)	H1	H2	H3	D1	D2	D3	W1	W2	R1 dia.	R2 dia.	Wt. lbs. (kg)	Knockouts @ Inches (mm) N1 (O.D.)
Frame Size — FR7													
230V	20 – 30	24.8 (630)	24.2 (614)	23.2 (590)	10.1 (257)	3.0 (77)	7.3 (184)	9.3 (237)	7.5 (190)	.7 (18)	.4 (9)	77.2 (35)	3 @ 1.5 (37)
480V	40 – 60												
575V	30 – 40												

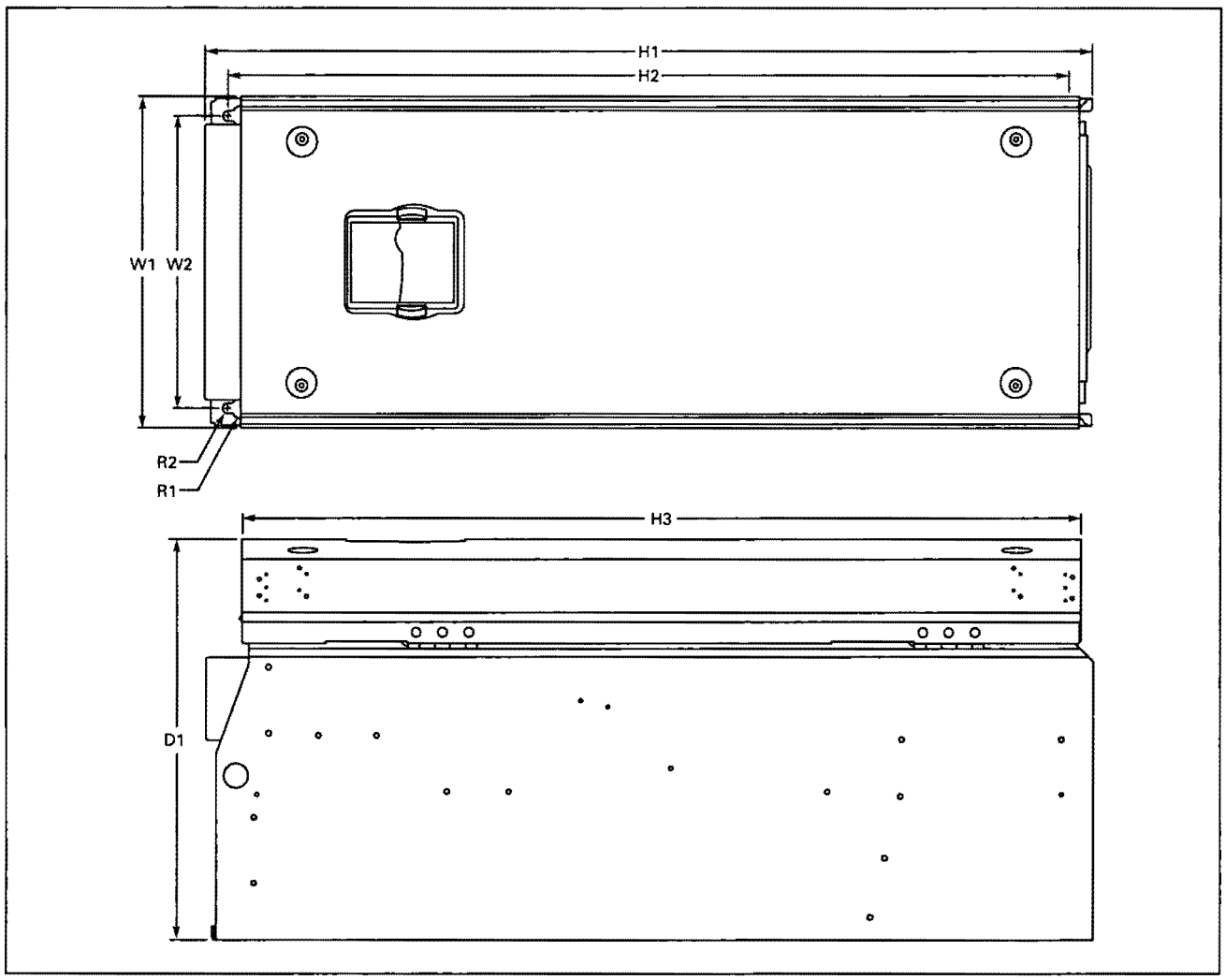

Figure 2-5: SLX9000 Dimensions, NEMA Type 1 and NEMA Type 12, FR8

Table 2-5: SLX9000 Dimensions, FR8

Voltage	hp (I_H)	Approximate Dimensions in Inches (mm)								Wt. lbs. (kg)
		D1	H1	H2	H3	W1	W2	R1 dia.	R2 dia.	
Frame Size — FR8										
460V	75	13.5 (344)	30.1 (764)	28.8 (732)	28.4 (721)	11.5 (291)	10 (255)	.7 (18)	.4 (9)	127 (58)
575V	50 – 75									

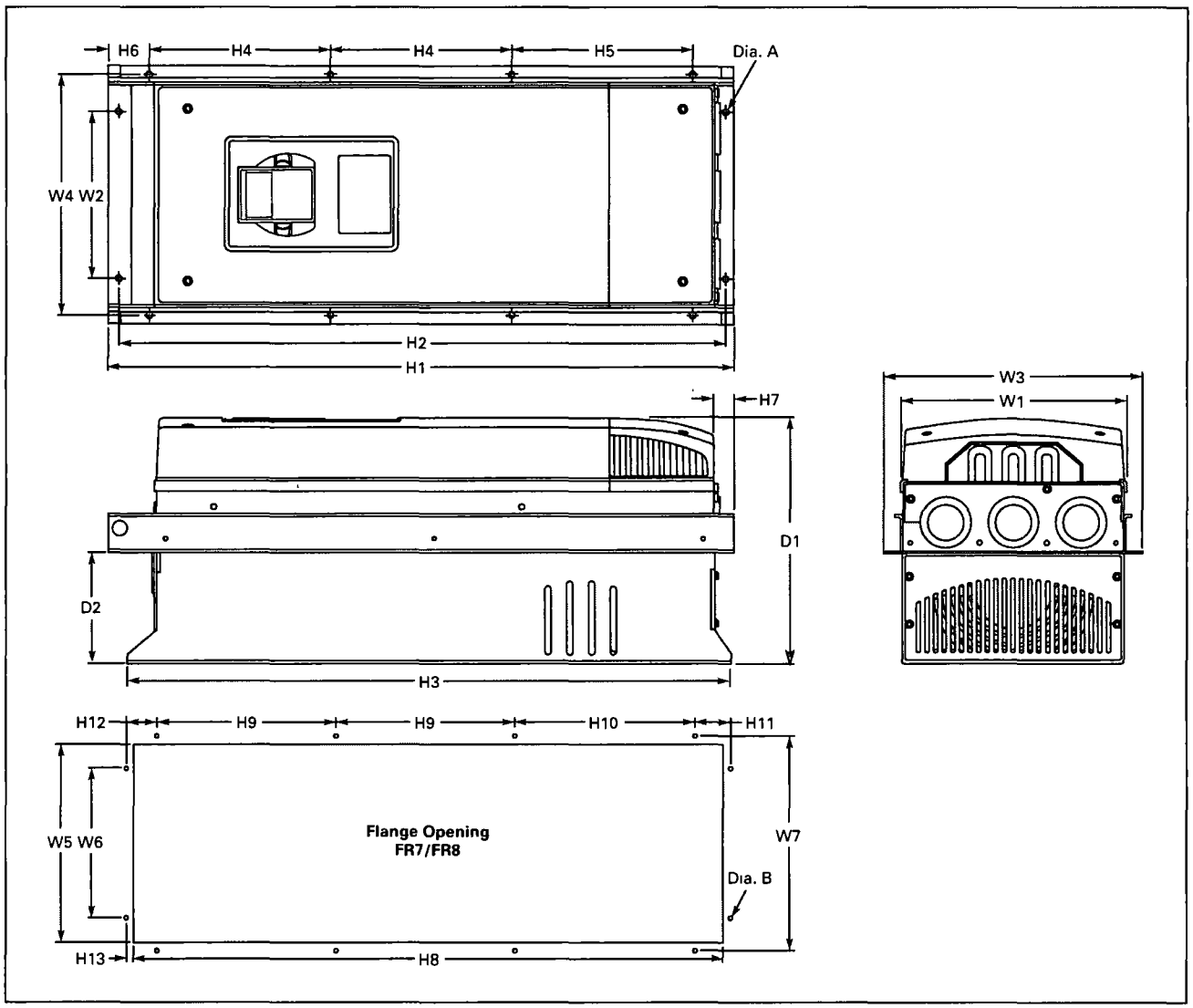

Figure 2-6: SLX9000 Dimensions, NEMA Types 1 and 12, FR7 and FR8 with Flange Kit

Table 2-6: SLX9000 Dimensions, NEMA Types 1 and 12, FR7 and FR8 with Flange Kit

		Approximate Dimensions in Inches (mm)													
Voltage	hp (I_H)	W1	W2	W3	W4	H1	H2	H3	H4	H5	H6	H7	D1	D2	Dia. A
Frame Size — FR7															
230	3/4 – 3	9.3 (237)	6.8 (175)	10.6 (270)	10.0 (253)	25.6 (652)	24.8 (632)	24.8 (630)	7.4 (189)	7.4 (189)	.9 (23)	.8 (20)	10.1 (257)	4.6 (117)	.3 (6)
480	1 – 5														
Frame Size — FR8															
230	5 – 7-1/2	11.2 (285)	—	14.0 (355)	13.0 (330)	32.8 (832)	—	29.3 (745)	10.2 (258)	10.4 (265)	1.7 (43)	2.2 (57)	13.5 (344)	4.3 (110)	.4 (9)
480	7-1/2 – 15														

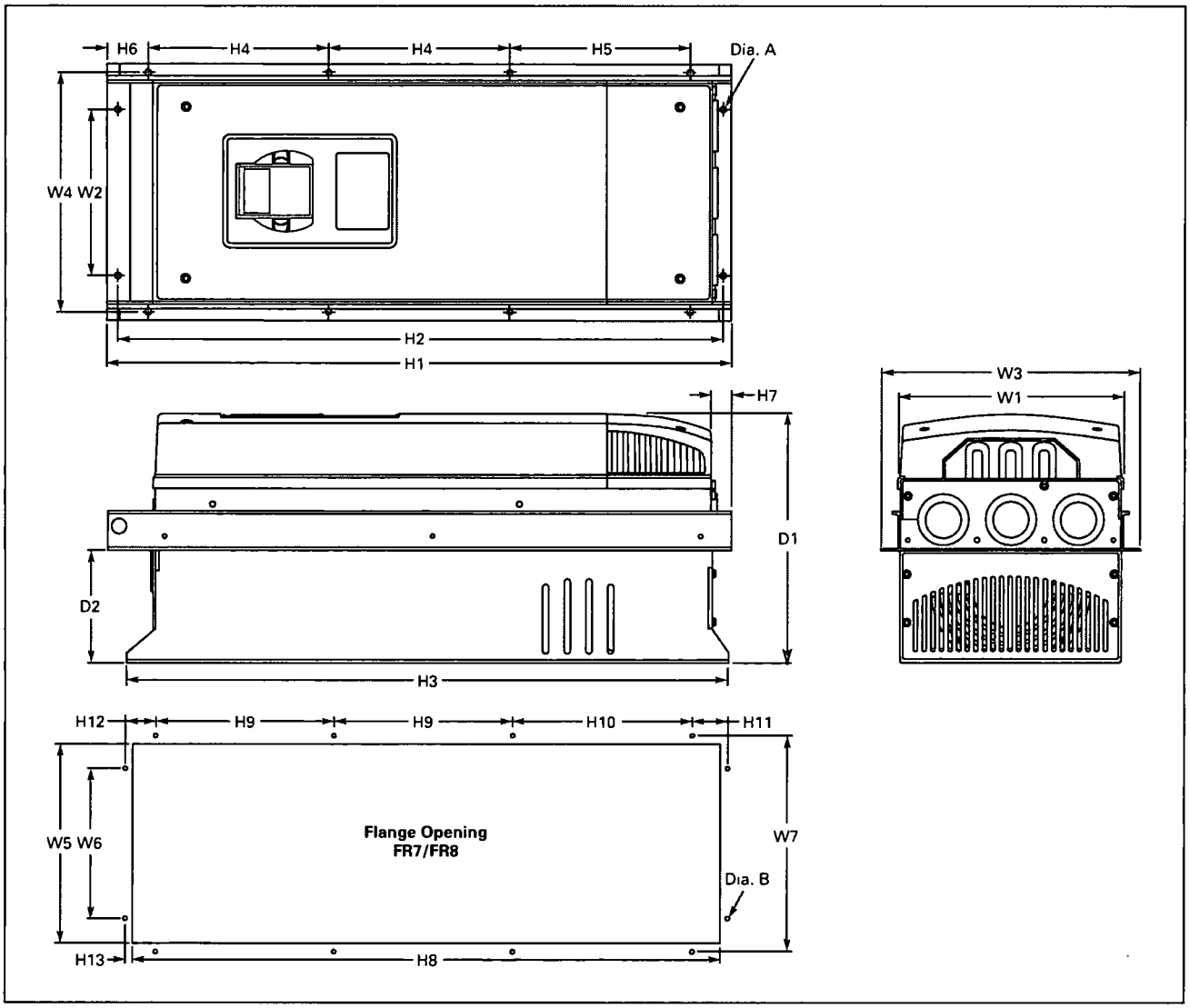

Figure 2-7: SLX9000 Dimensions, NEMA Types 1 and 12, FR7 and FR8 with Flange Opening

Table 2-7: SLX9000 Dimensions, NEMA Types 1 and 12, for the Flange Opening, FR7/FR8

Voltage	hp (I_H)	Approximate Dimensions in Inches (mm)									
		W5	W6	W7	H8	H9	H10	H11	H12	H13	Dia. B
Frame Size — FR7											
230	3/4 – 3	9.2 (233)	6.9 (175)	10.0 (253)	24.4 (619)	7.4 (189)	7.4 (189)	1.4 (35)	1.3 (32)	1.0 (25)	.3 (6)
480	1 – 5										
Frame Size — FR8											
230	5 – 7-1/2	11.9 (301)	—	13.0 (330)	31.9 (810)	10.2 (258)	10.4 (265)	—	—	1.3 (33)	.4 (9)
480	7-1/2 – 15										

Cooling

Forced air flow cooling is used.

Enough free space needs to be left above and below the drive to ensure sufficient air circulation and cooling. You will find the required dimensions for free space in **Table 2-8.**

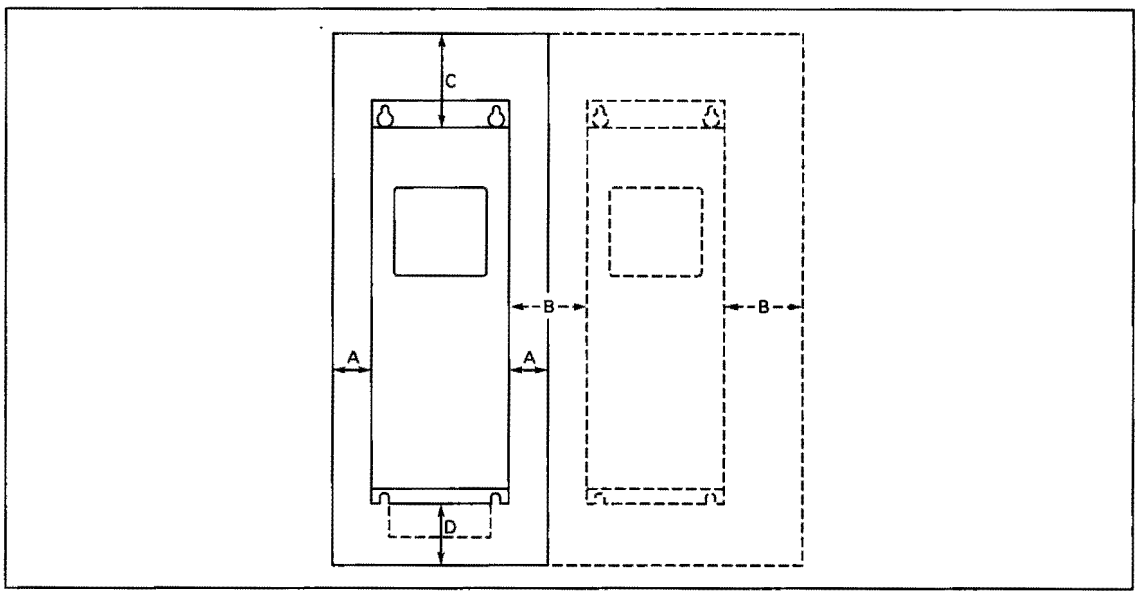

Figure 2-8: Installation Space

Table 2-8: Mounting Space Dimensions

Frame	Approximate Dimensions in Inches (mm)			
	A	B	C	D
MF4	.79 (20)	.79 (20)	3.94 (100)	1.97 (50)
MF5	.79 (20)	.79 (20)	4.72 (120)	2.36 (60)
MF6	1.18 (30)	.79 (20)	6.30 (160)	3.15 (80)
FR7	3.15 (80)	3.15 (80)	11.81 (300)	3.94 (100)
FR8	5.91 (150) ①	3.15 (80)	11.81 (300)	7.87 (200)

① Extra width is allowed to change the fan without disconnecting cables.

A = clearance around the drive (see also **B**)
B = clearance from one drive to another or distance to cabinet wall
C = free space above the drive
D = free space underneath the drive

Table 2-9: Required Cooling Air

Frame	Cooling Air Required (cfm)
MF4	41
MF5	112
MF6	250
FR7	250
FR8	383

Changing EMC Protection Class from H to T

The EMC protection class of SLX9000 drive frames MF4 – MF6 can be changed from **class H** to **class T** with a simple procedure presented in **Figure 2-9 – 2-10.**

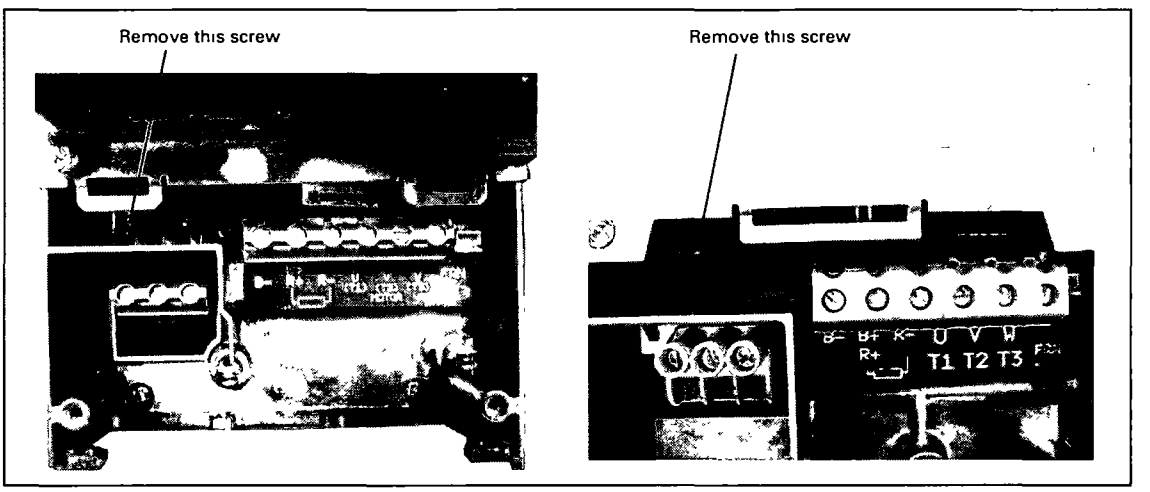

Figure 2-9: Changing of EMC Protection Class, MF4 (left) and MF5 (right), 460V

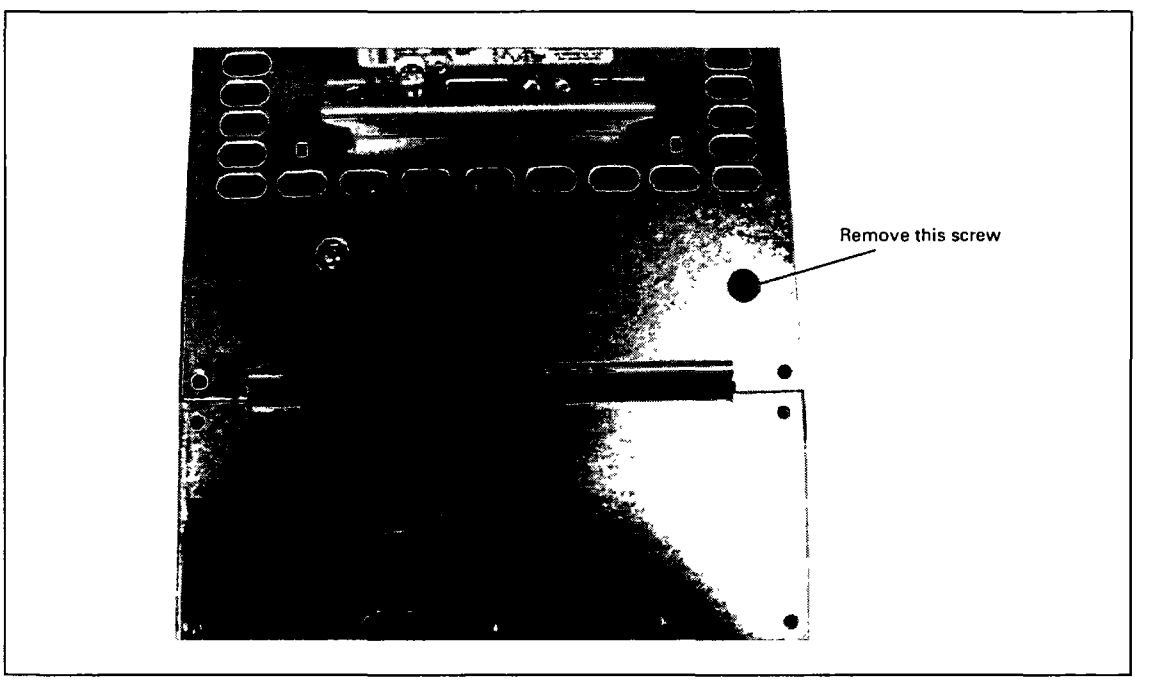

Figure 2-10: Changing of EMC Protection Class, MF6

Note: Do not attempt to change the EMC-level back to class H. Even if the procedure above is reversed, the drive will no longer fulfill the EMC requirements of class H!

January 2009

Chapter 3 — Power Wiring

Power Connections

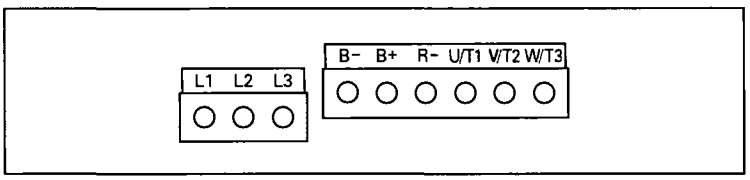

Figure 3-1: Power Connections, MF4 – MF6

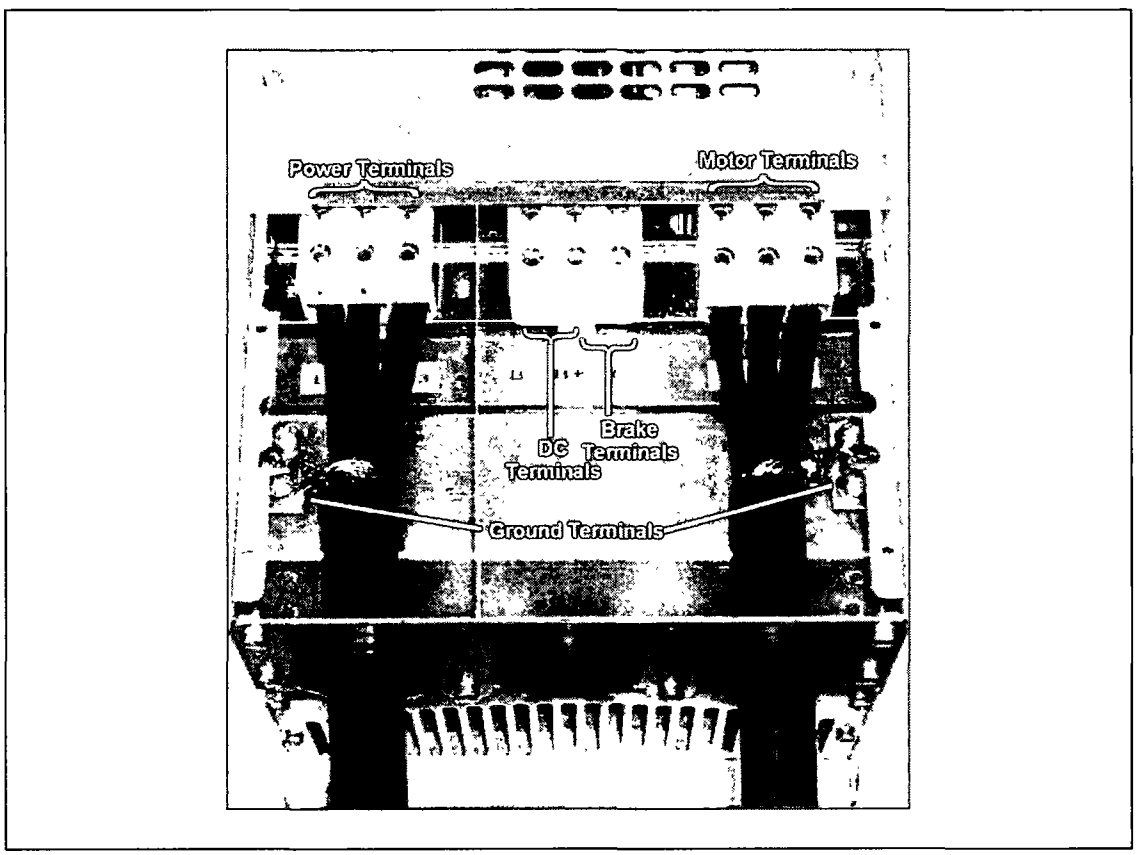

Figure 3-2: FR7 Power and Motor Wiring Terminals

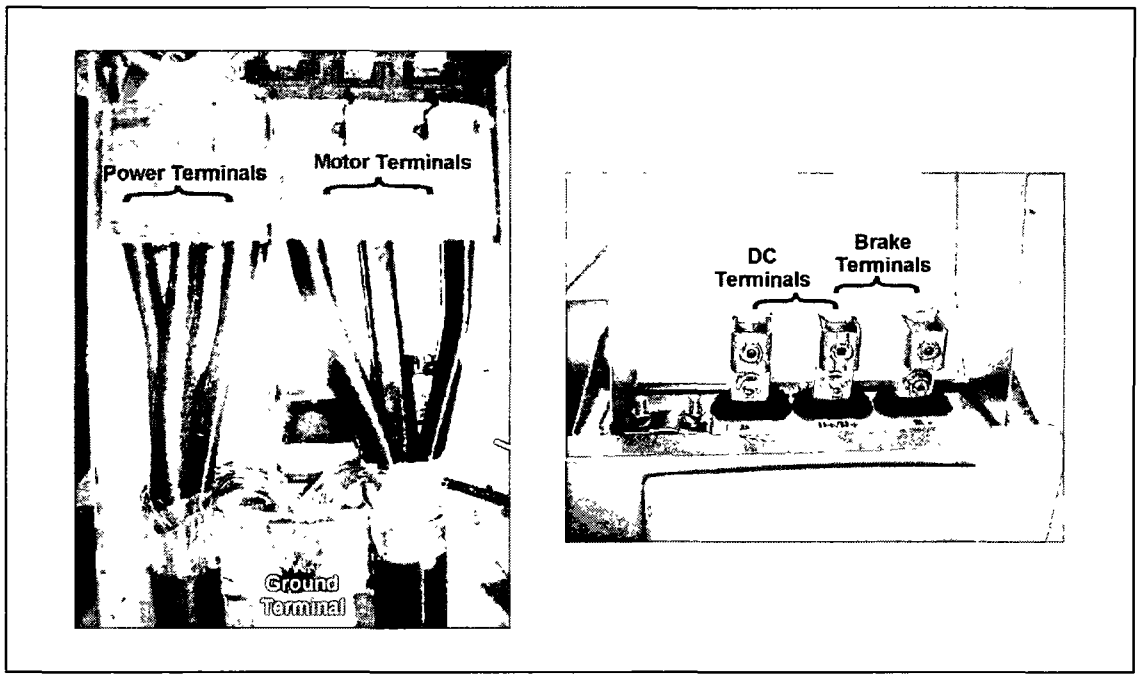

Figure 3-3: FR8 Power and Motor Wiring Terminals

Use cables with heat resistance of at least +70°C. The cables and the fuses must be dimensioned according to **Tables 3-1** and **3-2**. Installation of cables according to UL regulations is found on **Page 3-15**.

The fuses also function as cable overload protection.

These instructions apply only to cases with one motor and one cable connection from the drive to the motor. In any other case, ask the factory for more information.

Table 3-1: Cable Types Required to Meet Standards

Cable Type	1st Environment (Restricted Distribution) Level H/C	2nd Environment Level L	Level T	Level N
Mains Cable	1	1	1	1
Motor Cable	3①	2	1	1
Control Cable	4	4	4	4

Level C = EN 61800-3+A11, 1st environment, unrestricted distribution EN 61000-6-3
Level H = EN 61800-3+A11, 1st environment, restricted distribution EN 61000-6-4
Level L = EN 61800-3, 2nd environment
Level T: Consult Eaton.
Level N: Consult Eaton.
1 Power cable intended for fixed installation and the specific mains voltage. Shielded cable not required.
2 Power cable equipped with concentric protection wire and intended for the specific mains voltage.
3 Power cable equipped with compact low-impedance shield and intended for the specific mains voltage.
4 Screened cable equipped with compact low-impedance shield.

① 360° grounding of both motor and FC connection required to meet the standard.

Frames MF4 – MF6, FR7, FR8: A cable entry flange should be used when installing the motor cable at both ends in order to reach the EMC levels.

Note: The EMC requirements are fulfilled at factory defaults of switching frequencies (all frames).

Cable and Fuse Sizes

Use only copper wire with temperature rating of at least 75°C.

Table 3-2: Cable and Fuse Sizes – 230V Ratings

hp	Frame Size	I_l (A)	Fuse (A) ②	Wire Size ③		Terminal Size	
				Power	Ground	Power	Ground
1	MF4	4.8	10	14	14	12 – 16	14 – 16
1-1/2		6.6	10	14	14	12 – 16	14 – 16
2		7.8	10	14	14	12 – 16	14 – 16
3		11	15	12	14	12 – 16	14 – 16
5	MF5	17.5	20	10	10	8 – 16	8 – 16
7-1/2		25	30	8	8	8 – 18	8 – 16
10	MF6	31	40	8	8	1/0 – 14	2 – 10
15		48	60	4	6	1/0 – 14	2 – 10
20	FR7	61	80	2	6	1/0 – 14	2/0 – 10
25		72	100	2	6	1/0 – 14	2/0 – 10
30		87	110	1/0	4	1/0 – 14	2/0 – 10

② UL recognized type RK.
③ Based on a maximum environment of 104°F (40°C).

Table 3-3: Cable and Fuse Sizes – 480V Ratings

hp	Frame Size	I_l (A)	Fuse (A) [3]	Wire Size [2]		Terminal Size	
				Power	Ground	Power	Ground
1-1/2	MF4	3.3	10	14	14	12 – 16	14 – 16
2		4.3	10	14	14	12 – 16	14 – 16
3		5.6	10	14	14	12 – 16	14 – 16
5		7.6	10	14	14	12 – 16	14 – 16
7-1/2	MF5	12	15	12	12	8 – 16	8 – 16
10		16	20	10	10	8 – 16	8 – 16
15		23	30	8	8	8 – 16	8 – 16
20	MF6	31	35	8	8	1/0 – 14	2 – 10
25		38	50	6	8	1/0 – 14	2 – 10
30		46	60	4	6	1/0 – 14	2 – 10
40	FR7	61	80	2	6	1/0 – 14	2/0 – 10
50		72	100	2	6	1/0 – 14	2/0 – 10
60		87	110	1/0	4	1/0 – 14	2/0 – 10
75	FR8	105	125	2/0	2	4 – 3/0	3/0 – 4

[1] UL recognized type RK.
[3] Based on a maximum environment of 104°F (40°C).

Table 3-4: Cable and Fuse Sizes – 575V Ratings

hp	Frame Size	I_l (A)	Fuse (A) [3]	Wire Size [4]		Terminal Size	
				Power	Ground	Power	Ground
2	MF6	3.3	10	14	14	14 – 1/0	14 – 2
3		4.5	10	14	14	14 – 1/0	14 – 2
5		7.5	10	14	14	14 – 1/0	14 – 2
7-1/2		10	15	12	14	14 – 1/0	14 – 2
10		13.5	20	10	12	14 – 1/0	14 – 2
15		18	30	10	10	14 – 1/0	14 – 2
20		22	35	8	8	14 – 1/0	14 – 2
25		27	40	8	8	14 – 1/0	14 – 2
30	FR7	34	50	6	8	14 – 1/0	10 – 1/0
40		41	60	4	6	14 – 1/0	10 – 1/0
50	FR8	52	80	2	6	4 – 3/0	4 – 3/0
60		62	100	1	6	4 – 3/0	4 – 3/0
75		80	125	1/0	6	4 – 3/0	4 – 3/0

[3] UL recognized type RK.
[4] Based on a maximum environment of 104°F (40°C).

Mounting of Cable Accessories

Enclosed with your drive you have received a plastic bag containing components that are needed for the installation of the mains and motor cables in the drive.

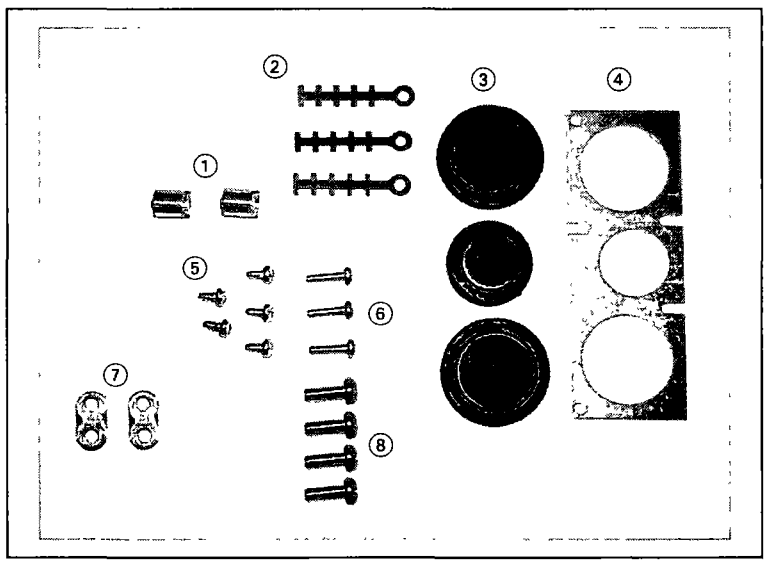

Figure 3-4: Cable Accessories

Components:

1	Grounding terminals (MF4, MF5) (2)	5	Screws, M4x10 (5)
2	Cable clamps (3)	6	Screws, M4x16 (3)
3	Rubber grommets (sizes vary from class to class) (3)	7	Grounding cable clamps (MF6, FR7) (2) (FR8) (1)
		8	Grounding screws M5x16 (MF6, FR7) (4) (FR8) (2)
4	Cable entry gland (1)		

Note: The cable accessories installation kit for drives of protection class NEMA Type 12 includes all components except 4 and 5.

Table 3-5: Mounting Procedure

1	Make sure that the plastic bag you have received contains all necessary components.	
2	Open the cover of the drive.	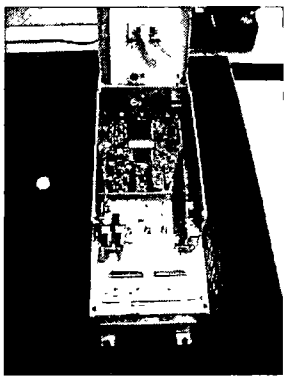
3	Remove the cable cover. Observe the places for: a) the grounding terminals (MF4/MF5)	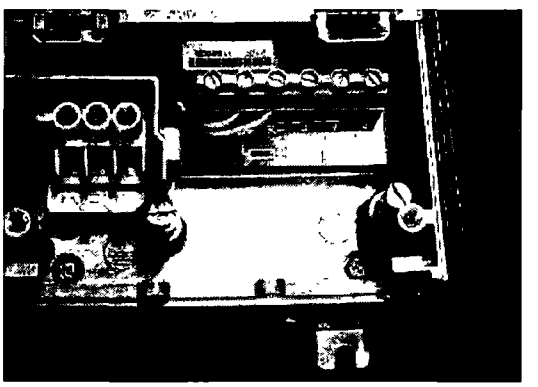
	b) the grounding cable clamps (MF6, FR7, FR8)	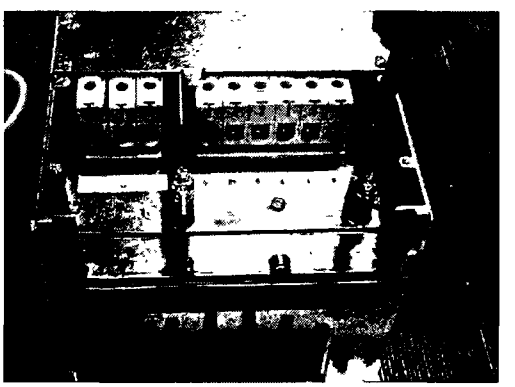

Table 3-5: Mounting Procedure (Continued)

4	Re-install the cable cover. Mount the cable clamps with the three M4x16 screws as shown. Note that the location of the grounding bar in MF6, FR7 and FR8 is different from what is shown in the picture.	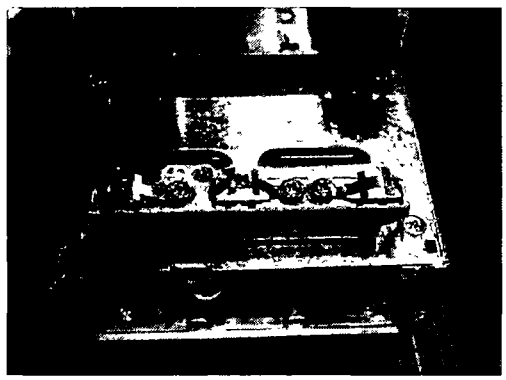
5	Place the rubber grommets in the openings as shown.	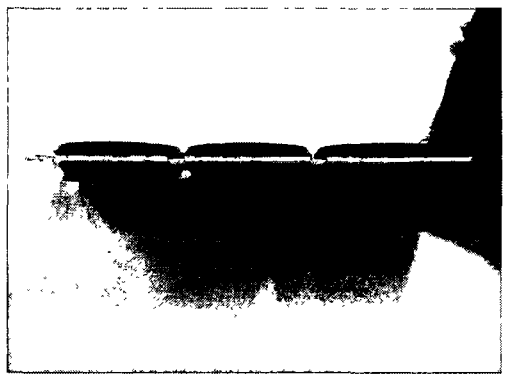
6	Fix the cable entry gland to the frame of the drive with the five M4x10 screws. Close the cover of the drive.	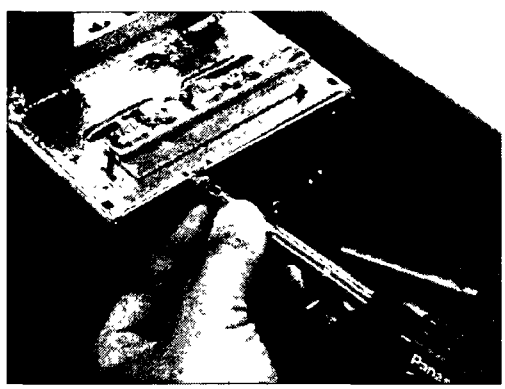

Installation Guidelines

To ensure proper wiring, use the following guidelines:

- Use heat-resistant copper cables only, +75°C or higher.
- The input line cable and line fuses must be sized in accordance with the rated input current of the unit. See **Tables 3-2 – 3-4.**
- Consistent with UL listing requirements, for maximum protection of the SLX9000 drive, UL recognized fuses type RK5 should be used for 480V and 230V ratings.
- If the motor temperature sensing is used for overload protection, the output cable size may be selected based on the motor specifications.
- If three or more shielded cables are used in parallel for the output on the larger units, every cable must have its own overload protection.
- Avoid placing the motor cables in long parallel lines with other cables.
- If the motor cables run in parallel with other cables, note the minimum distances between the motor cables and other cables given in **Table 3-6** below:

Table 3-6: Cable Spacings

Minimum Distance Between Cables in Feet (m)	Cable in Feet (m)
1 (0.3)	≤ 164 (50)
3.3 (1.0)	≤ 656 (200)

- The spacings of **Table 3-6** also apply between the motor cables and signal cables of other systems.
- The maximum length of the motor cables is as follows:
  - 1 – 2 hp, 230V units, 328 ft. (100m)
  - All other hp units, 984 ft. (300m)
- The motor cables should cross other cables at an angle of 90 degrees.
- If conduit is being used for wiring, use separate conduits for the input power wiring, the output power wiring, the signal wiring and the control wiring.

Stripping Lengths of Motor and Mains Cables

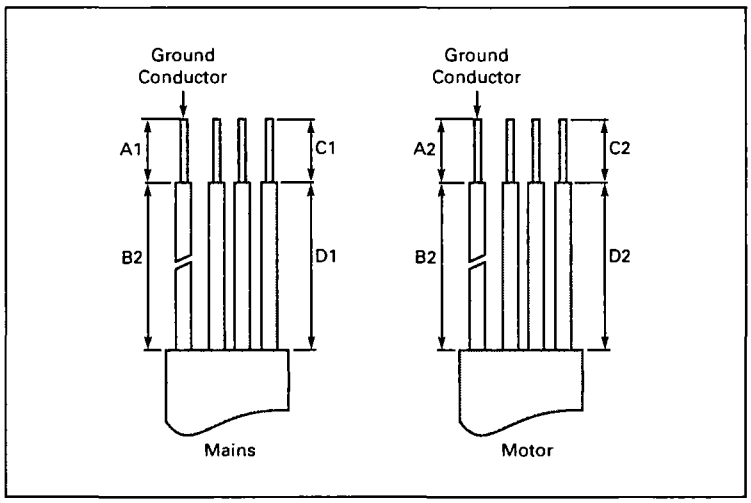

Figure 3-5: Stripping of Cables

Table 3-7: Cable Stripping Lengths

Frame	Approximate Dimensions in Inches (mm)							
	A1	B1	C1	D1	A2	B2	C2	D2
MF4	.59 (15)	1.38 (35)	.39 (10)	.79 (20)	.28 (7)	1.97 (50)	.28 (7)	1.38 (35)
MF5	.79 (20)	1.57 (40)	.39 (10)	1.18 (30)	.79 (20)	2.36 (60)	.39 (10)	1.57 (40)
MF6	.79 (20)	3.54 (90)	.59 (15)	2.36 (60)	.79 (20)	3.54 (90)	.59 (15)	2.36 (60)
FR7	.98 (25)	4.72 (120)	.98 (25)	4.72 (120)	.98 (25)	4.72 (120)	.98 (25)	4.72 (120)
FR8	1.10 (28)	9.45 (240)	1.10 (28)	9.45 (240)	1.10 (28)	9.45 (240)	1.10 (28)	9.45 (240)

Installation of Cables to SLX9000, MF4 – MF6

Figure 3-6: SLX9000, MF4

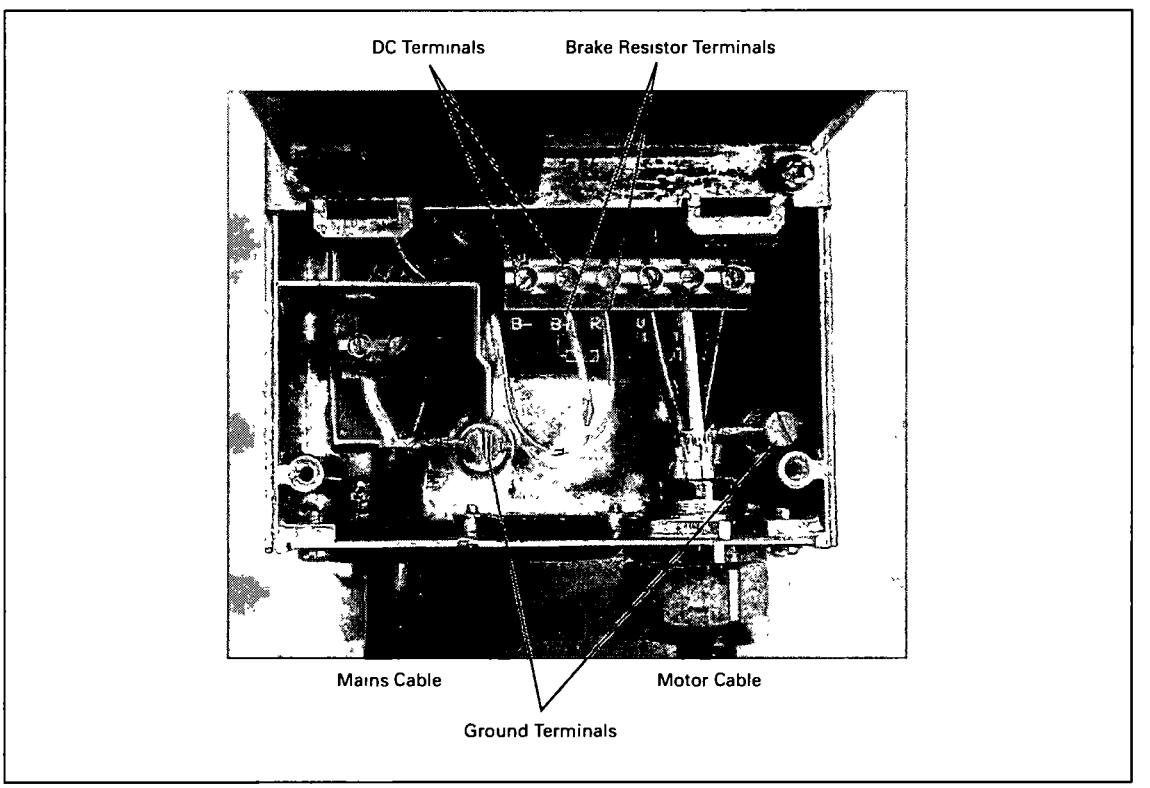

Figure 3-7: Cable Installation in SLX9000, MF4

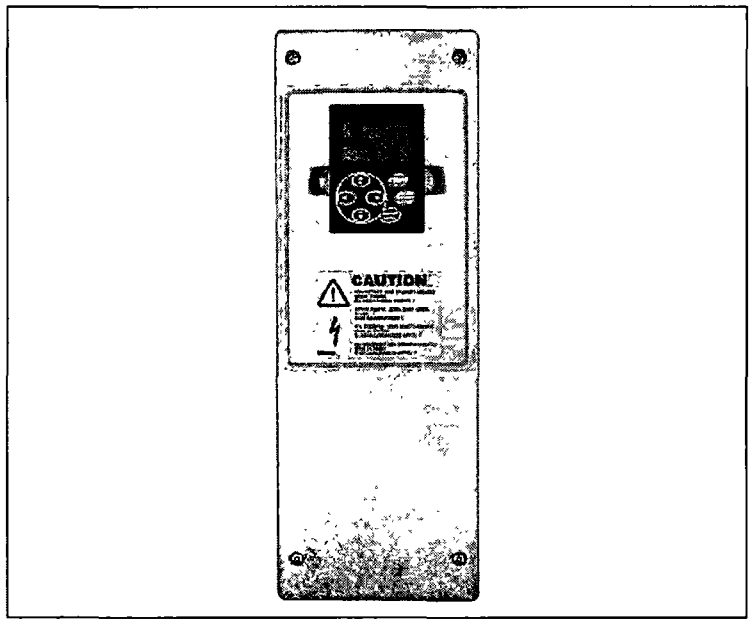

Figure 3-8: SLX9000, MF5

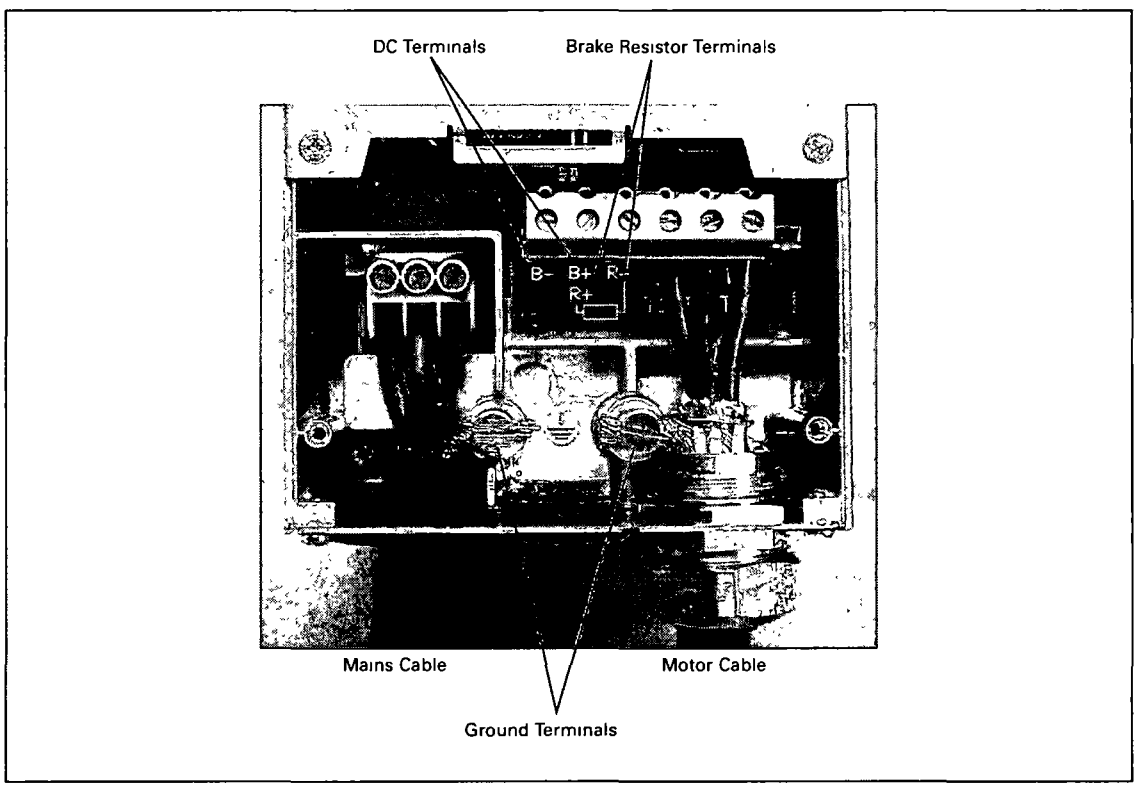

Figure 3-9: Cable Installation in SLX9000, MF5

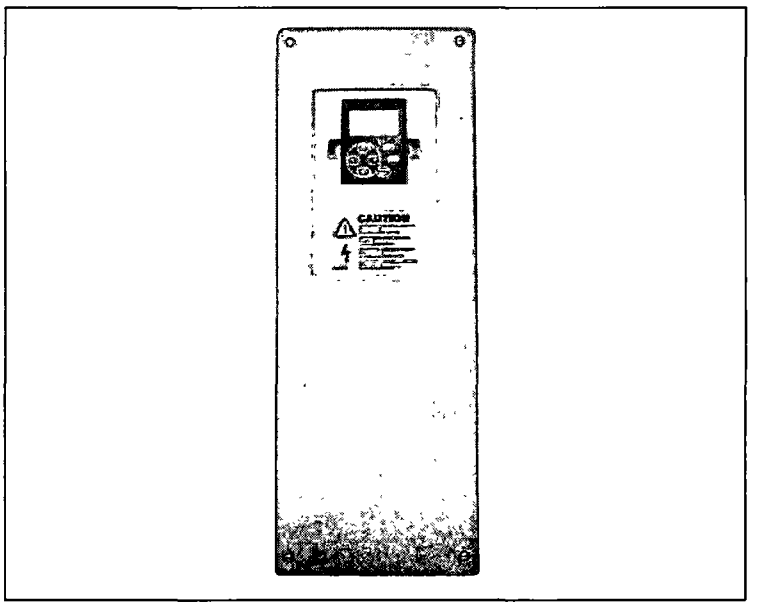

Figure 3-10: SLX9000, MF6

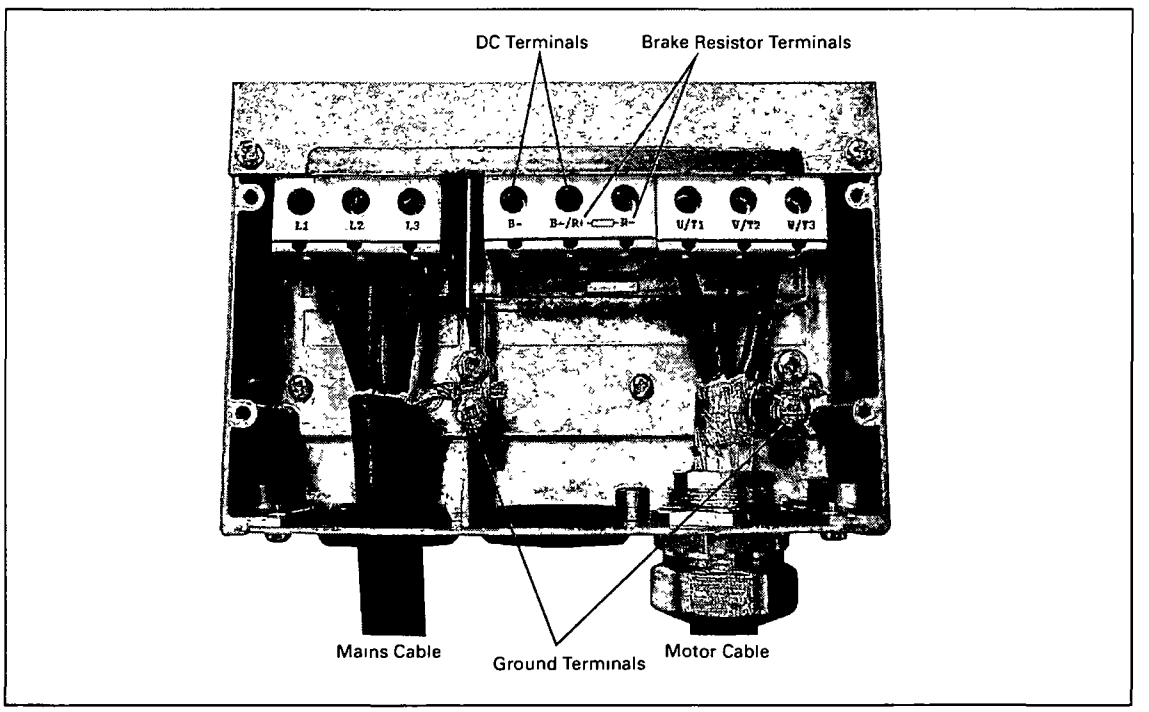

Figure 3-11: Cable Installation in SLX9000, MF6

Installation of Cables to SLX9000, FR7

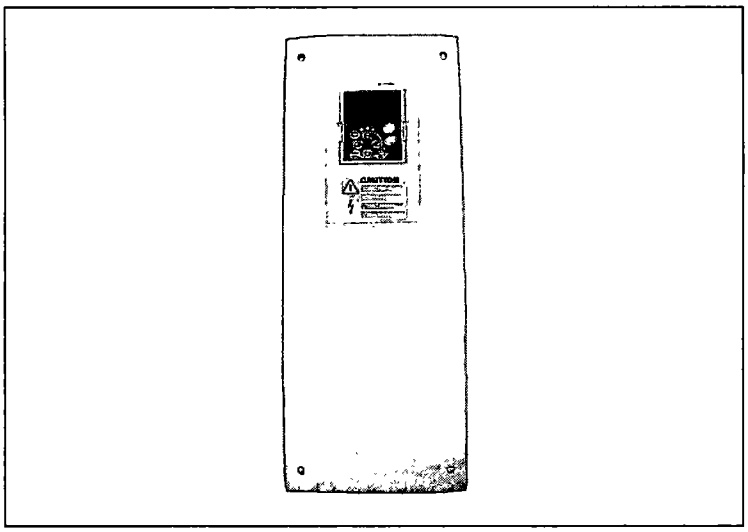

Figure 3-12: SLX9000, FR7

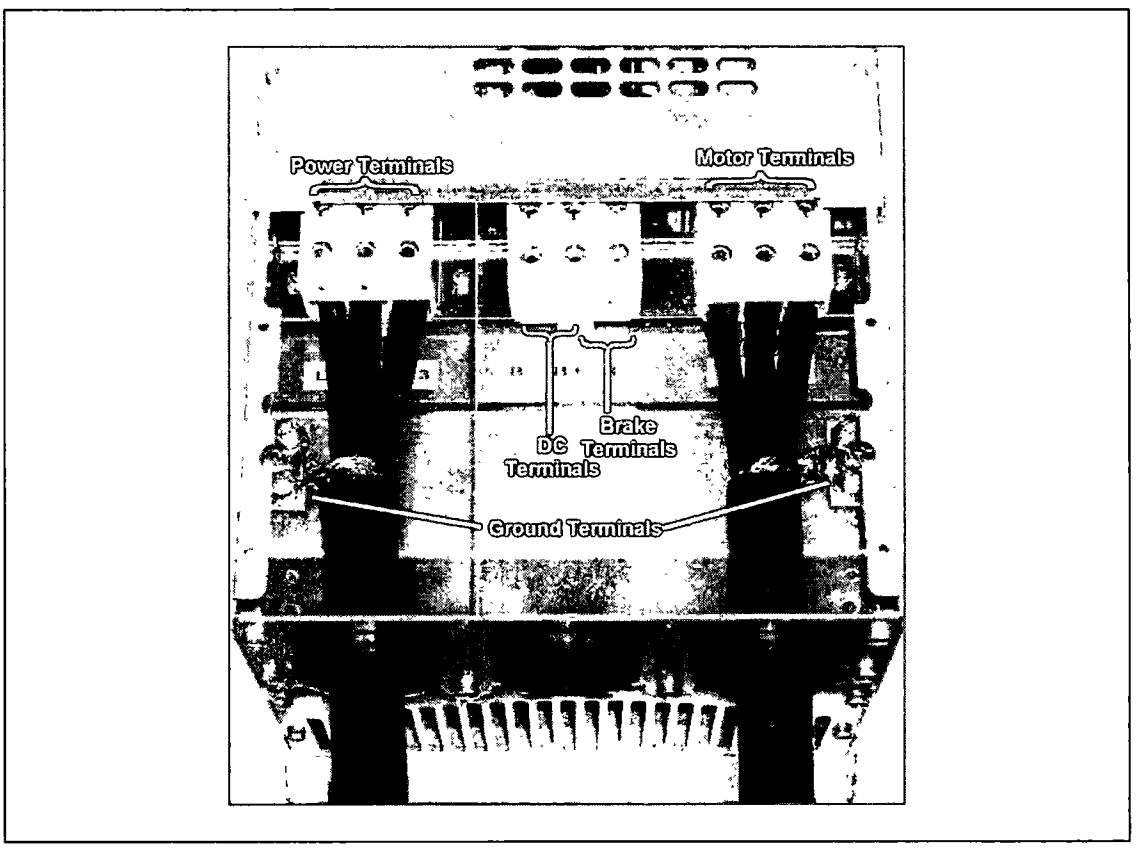

Figure 3-13: Cable Installation in SLX9000, FR7

Installation of Cables to SLX9000, FR8

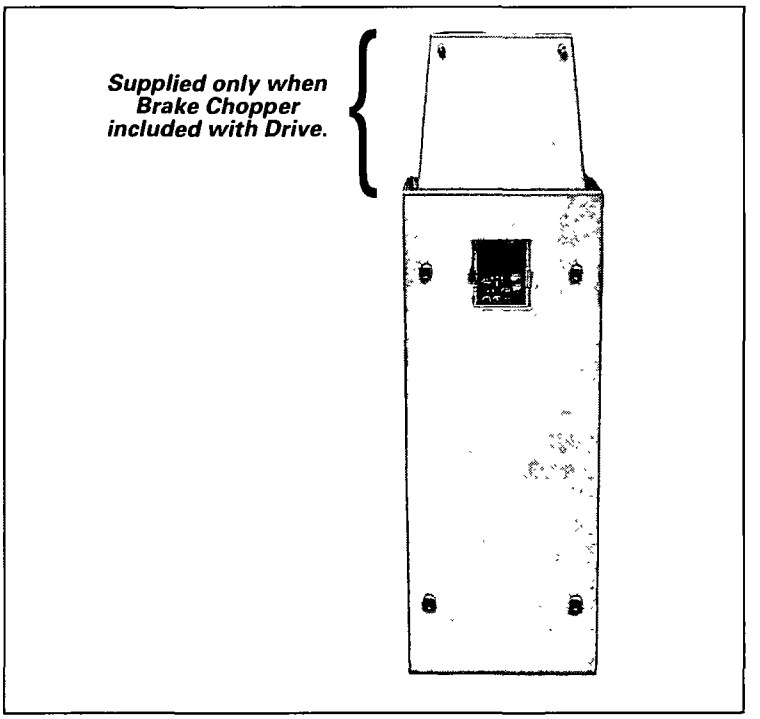

Figure 3-14: SLX9000, FR8

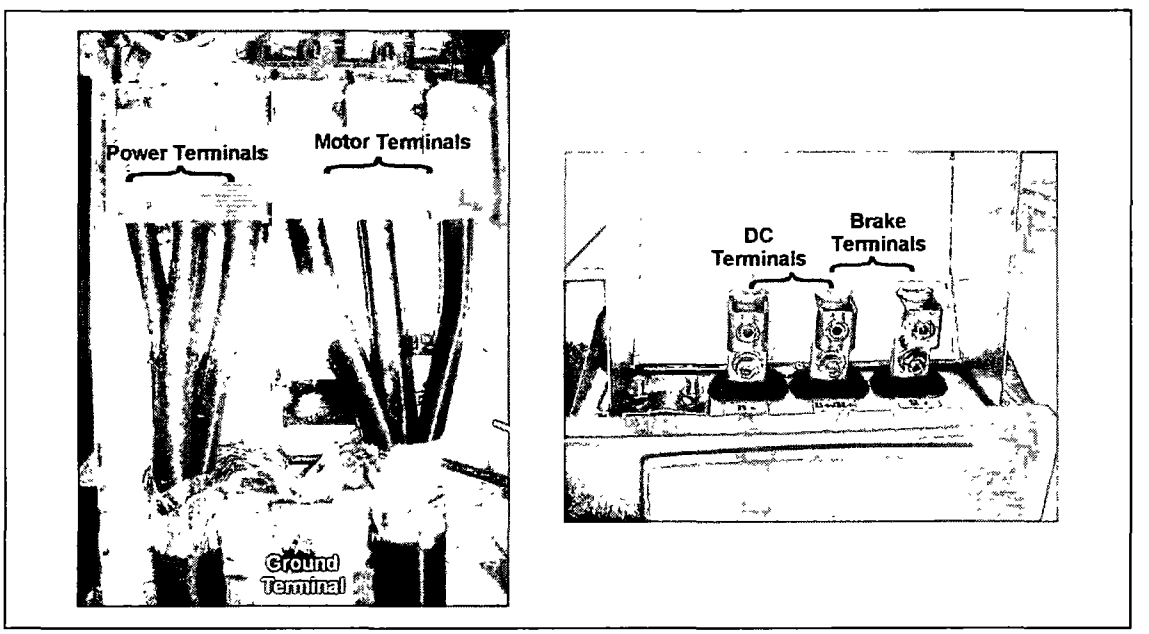

Figure 3-15: Cable Installation in SLX9000, FR8

Cable Installation and the UL Standards

To meet the UL (Underwriters Laboratories) regulations, a UL-approved copper cable with a minimum heat-resistance of +60/75°C must be used.

The tightening torques of the terminals are given in **Table 3-8.**

Table 3-8: Tightening Torques of Terminals

Frame	Tightening Torque (Nm)	Tightening Torque in-lbs.
MF4	.5 – .6	4 – 5
MF5	1.2 – 1.5	10 – 13
MF6	4	35
FR7	10	85
FR8	40/22 ①	340/187 ①

① The isolation standoff of the bus bar will not withstand the listed tightening torque. Use a wrench to apply a counter torque when tightening

Cable and Motor Insulation Checks

1. Motor cable insulation checks

   Disconnect the motor cable from terminals U, V and W of the drive and from the motor. Measure the insulation resistance of the motor cable between each phase conductor as well as between each phase conductor and the protective ground conductor.

   The insulation resistance must be >1MΩ.

2. Mains cable insulation checks

   Disconnect the mains cable from terminals L1, L2 and L3 of the drive and from the mains. Measure the insulation resistance of the mains cable between each phase conductor as well as between each phase conductor and the protective ground conductor.

   The insulation resistance must be >1MΩ.

3. Motor insulation checks

   Disconnect the motor cable from the motor and open the bridging connections in the motor connection box. Measure the insulation resistance of each motor winding. The measurement voltage must equal at least the motor nominal voltage but not exceed 1000V. The insulation resistance must be >1MΩ.

January 2009

Chapter 4 — Control Wiring

Control Unit

MF4 – MF6 460V

In frames MF4 – MF6 there are two option board connectors SLOT D and SLOT E (see **Figure 4-1**). Newest software supports hardware with two board slots. Also older software versions can be used, but they will not support hardware with two board slots.

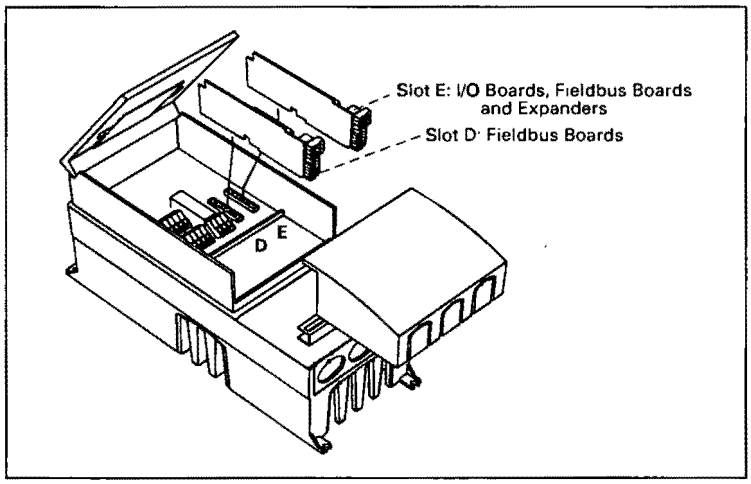

Figure 4-1: Option Board Slots D and E in Frames MF4 – MF6

460V only.

Allowed Option Boards in MF4 – MF6

See below for the allowed option boards in the two slots on MF4 – MF6 drives.

SLOT D	C3	C4	C6	C7	CI	CJ									
SLOT E	AA	AI	B1	B2	B4	B5	B9	C2	C3	C4	C6	C7	C8	CI	CJ

When two option boards are used, the one in slot E has to be OPTAI or OPTAA. Do not use two OPTB_ or OPTC_ boards. Also, combinations of OPTB_ and OPTC_ boards are prohibited.

See descriptions for OPTAA and OPTAI option boards in **Appendixes B** and **C**.

All 230V, FR7 – FR8 460V and All 575V

The control unit of FR7 and FR8 drives consists of the control board and various option boards that plug into the five slot connectors (A to E) of the control board.

Galvanic isolation of the control terminals is provided as follows:

- The control connections are isolated from power, and the GND terminals are permanently connected to ground.
- The digital inputs are galvanically isolated from the I/O ground.
- The relay outputs are double-isolated from each other at 300V AC.

Option Board General Information

The FR7 and FR8 drives can accommodate a wide selection of *expander* and *adapter option boards* to customize the drive for your application needs.

The drive's control unit is designed to accept a total of five option boards. Option boards are available for normal analog and digital inputs and outputs, communication and additional application-specific hardware.

The factory-installed standard option board configuration includes an A9 I/O board and an A2 relay output board, which are installed in slots A and B. For information on additional option boards, see the *9000X Series Drives Option Board User Manual.*

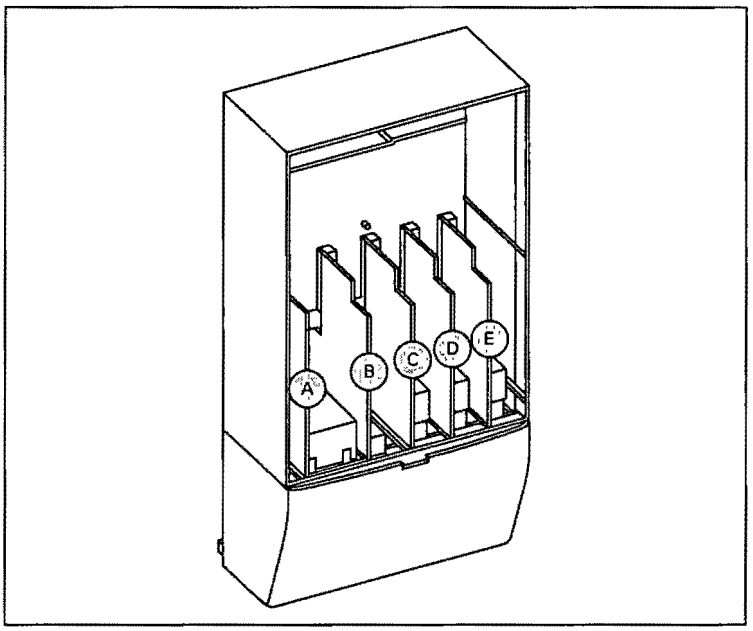

Figure 4-2: Option Board Slots

All 230V, FR7 – FR8 480V and All 575V.

Control Connections

MF4 – MF6 460V

The basic control connections for MF4 – MF6 are shown on **Page 4-3.**

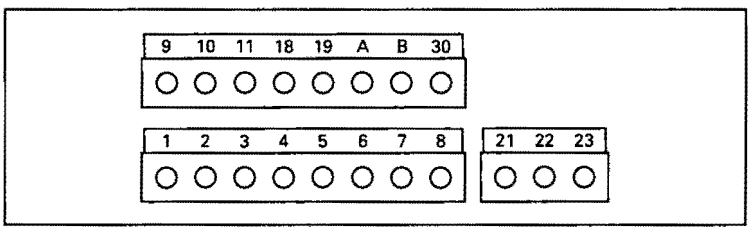

Figure 4-3: Control Connections, MF4 – MF6 460V

Table 4-1: Multi-Control Application Default Input/Output Configuration, MF4 – MF6 460V

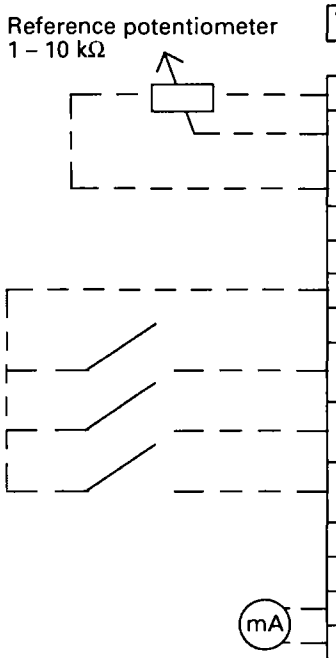

Terminal		Signal	Description
1	+10 V_{ref}	Reference output	Voltage for potentiometer, etc.
2	AI1+	Analog input, voltage range 0 – 10V DC	Voltage input frequency reference
3	AI1-	I/O Ground	Ground for reference and controls
4	AI2+	Analog input, current range 0 – 20 mA	Current input frequency reference
5	AI2-/GND		
6	+24V	Control voltage output	Voltage for switches, etc. max .1A
7	GND	I/O ground	Ground for reference and controls
8	DIN1	Start forward (programmable)	Contact closed = start forward
9	DIN2	Start reverse (programmable)	Contact closed = start reverse
10	DIN3	Multi-step speed selection 1 (programmable)	Contact closed = multi-step speed
11	GND	I/O ground	Ground for reference and controls
18	AO1+	Output frequency Analog output	Programmable Range 0 – 20 mA, R_L max. 500Ω
19	AO1-		
A	RS-485	Serial bus	Differential receiver/transmitter
B	RS-485	Serial bus	Differential receiver/transmitter
30	+24V	24V auxiliary input voltage	Control power supply backup
21	RO1	Relay output 1 FAULT	Programmable
22	RO1		
23	RO1		

Table 4-2: AI1 Configuration, When Programmed as DIN4, MF4 – MF6 460V

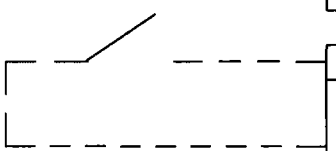

Terminal		Signal	Description
1	+10 V_{ref}	Reference output	Voltage for potentiometer, etc.
2	AI1+ **or DIN4**	Analog input, voltage range 0 – 10V DC	Voltage input frequency reference (MF2 – MF3) Voltage/current input frequency reference (MF4 – MF6) **Can be programmed as DIN4**
3	AI1-	I/O Ground	Ground for reference and controls
4	AI2+	Analog input, current range 0 – 10V DC or current range 0 – 20 mA	Voltage or current input frequency reference
5	AI2-/GND		
6	+24V	Control voltage output	
7	GND	I/O ground	Ground for reference and controls

Reference potentiometer
1 – 10 kΩ

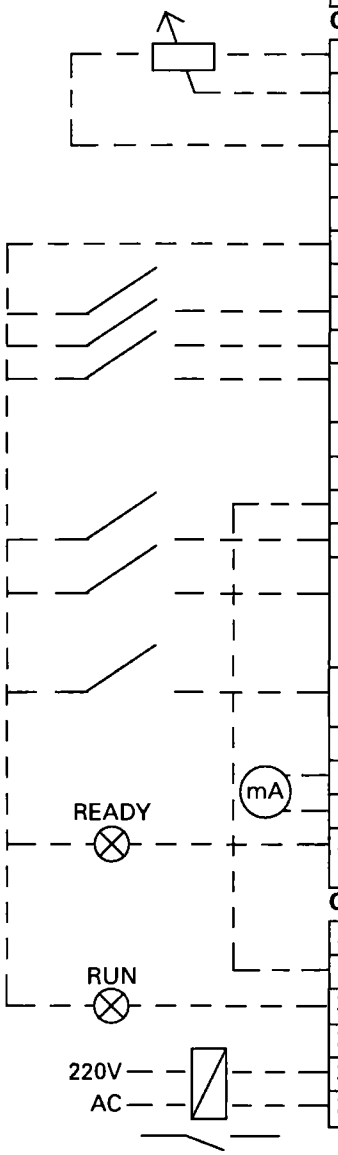

Table 4-3: Default I/O Configuration, All 230V, FR7 – FR8 460V and All 575V

Terminal		Signal	Description		
OPTA1					
1	+10V$_{ref}$	Reference output	Voltage for potentiometer, etc.		
2	AI1+	Analog input, voltage range 0 – 10V DC	Voltage input frequency reference		
3	AI1-	I/O Ground	Ground for reference and controls		
4	AI2+	Analog input, current range 0 – 20 mA	Current input frequency reference		
5	AI2-				
6	+24V	Control voltage output	Voltage for switches. etc. max 0.1A		
7	GND	I/O ground	Ground for reference and controls		
8	DIN1	Start forward	Contact closed = start forward		
9	DIN2	Start reverse	Contact closed = start reverse		
10	DIN3	External fault input (programmable)	Contact open = no fault Contact closed = fault		
11	CMA	Common for DIN1 – DIN3	Connect to GND or +24V		
12	+24V	Control voltage output	Voltage for switches (see #6)		
13	GND	I/O ground	Ground for reference and controls		
14	DIN4	Multi-step speed select 1	DIN4	DIN5	Frequency ref.
15	DIN5	Multi-step speed select 2	Open Closed Open Closed	Open Open Closed Closed	Ref.U$_{in}$ Multi-step ref.1 Multi-step ref.2 RefMax
16	DIN6	Fault reset	Contact open = no action Contact closed = fault reset		
17	CMB	Common for DIN4 – DIN6	Connect to GND or +24V		
18	AO1+	Output frequency Analog output	Programmable Range 0 – 20 mA/R$_L$, max. 500Ω		
19	AO1-				
20	DO1	Digital output READY	Programmable Open collector, I ≤ 50 mA, U ≤ 48V DC		
OPTA2					
21	RO1	Relay output 1 RUN			
22	RO1				
23	RO1				
24	RO2	Relay output 2 FAULT			
25	RO2				
26	RO2				

Table 4-4: Control Input/Output Terminal Signals, MF4 – MF6 460V

Terminal		Signal	Description
1	+10 V_{ref}	Reference voltage	Maximum current 10 mA
2	AI1+	Analog input, voltage (MF4 and larger: voltage or current)	**MF4 – MF6:** Selection V or mA with jumper block X8 (see **Page 4-3**): Default: 0 – 10V (Ri = 200 kΩ) 0 – 20 mA (Ri = 250W)
3	AI1-	Analog input common	Differential input if not connected to ground; Allows ±20V differential mode voltage to GND
4	AI2+	Analog input, voltage or current	Selection V or mA with jumper block X13 (MF4 – MF6) Default: 0 – 20mA (Ri = 250 Ω) 0 – 10V (Ri = 200 kΩ)
5	AI2-	Analog input common	Differential input; Allows ±20V differential mode voltage to GND
6	24 V_{out}	24V auxiliary output voltage	±10%, maximum current 100 mA
7	GND	I/O ground	Ground for reference and controls
8	DIN1	Digital input 1	R_i = min. 5 kΩ
9	DIN2	Digital input 2	
10	DIN3	Digital input 3	
11	GND	I/O ground	Ground for reference and controls
18	AO1+	Analog signal (+output)	Output signal range: Current 0(4) – 20 mA, R_L max 500Ω or
19	AO1-/GND	Analog output common	
A	RS-485	Serial bus	Differential receiver/transmitter, bus impedance 120Ω
B	RS-485	Serial bus	Differential receiver/transmitter, bus impedance 120Ω
30	+24V	24V auxiliary input voltage	Control power supply backup

21	RO1/1	Relay output 1	Switching capacity: 24V DC/8A 250V AC/8A 125V DC/.4A Relay output terminals are galvanically isolated from the I/O ground
22	RO1/2		
23	RO1/3		

Table 4-5: Option Board A9 Terminal Descriptions, All 230V, FR7 – FR8 460V and All 575V

Terminal		Signal	Description and Parameter Reference
1	+10 V_{ref}	Reference voltage	Maximum current 10 mA
2	AI1+	Analog input, voltage	Default: 0 – +10V (R_i = 200 kΩ) -10V to +10V (joystick control) 0 – 20 mA (R_i = 250 Ω) *Select V or mA with jumper block X1* Differential input if not connected to ground; allows ±20V differential mode voltage to GND
3	GND	Analog input common	
4	AI2+	Analog input	Default: 0 – 20 mA (R_i = 250 Ω) 0 – +10V (R_i = 200 kΩ) -10V to +10V (joystick control) *Select V or mA with jumper block X2* Differential input if not connected to ground; allows ±20V differential mode voltage to GND
5	GND/AI2-	Analog input common	
6	24 V_{out}	24V control voltage (bi-directional)	±15%, 250 mA (all boards total); 150 mA (max. current from single board); Can be used as external power backup for the control (and fieldbus); Galvanically connected to terminal #12
7	GND	I/O ground	Ground for reference and controls; Galvanically connected to terminals #13, 19
8	DIA1	Digital input 1	R_i = min. 5 kΩ
9	DIA2	Digital input 2	
10	DIA3	Digital input 3	
11	CMA	Digital input common A for DIN1, DIN2 and DIN3	Must be connected to GND or 24V of I/O terminal or to external 24V or GND. Selection with jumper block X3.
12	24 V_{out}	24V control voltage (bi-directional)	Same as terminal #6; Galvanically connected to terminal #6
13	GND	I/O ground	Same as terminal #7; Galvanically connected to terminals #7 & 19
14	DIB4	Digital input 4	R_i = min. 5 kΩ
15	DIB5	Digital input 5	
16	DIB6	Digital input 6	
17	CMB	Digital input common B for DIN4, DIN5 and DIN6	Must be connected to GND or 24V of I/O terminal or to external 24V or GND. Select with jumper block X3.
18	A01+	Analog signal (+output)	Output signal range: 0 – 10V default Current: 0(4) – 20 mA, RL max 500 Ω or Voltage: 0 – 10V, RL >1 kΩ Selection with jumper block X6.
19	A01-	Analog output common	Maximum V_{in} = 48V DC; Galvanically connected to terminals #7, 13
20	DO1	Digital output1	Open collector, Maximum current = 50 mA

Table 4-6: Option Board A2 Terminal Descriptions, All 230V, FR7 – FR8 460V and All 575V

Terminal		Signal	Technical Information
21	RO1/1	Normally Closed (NC)	Switching Capacity: 24V DC / 8A 250V AC / 8A 125V DC / 0.4A Min Switching Load: 5V/10 mA Continuous Capacity: <2 Arms
22	RO1/2	Common	
23	RO1/3	Normally Open (NO)	
24	RO2/1	Normally Closed (NC)	Switching Capacity: 24V DC / 8A 250V AC / 8A 125V DC / 0.4A Min Switching Load: 5V/10 mA Continuous Capacity: <2 Arms
25	RO2/2	Common	
26	RO2/3	Normally Open (NO)	

Jumper Selections on SLX9000 Basic Board

The user is able to customize the functions of the drive to better suit an application by selecting certain positions for the jumpers on the SLX9000 board. The positions of the jumpers determine the signal type of analog input (terminal #2) and whether the termination resistor RS-485 is used or not.

The following figures present the jumper selections of SLX9000 drives:

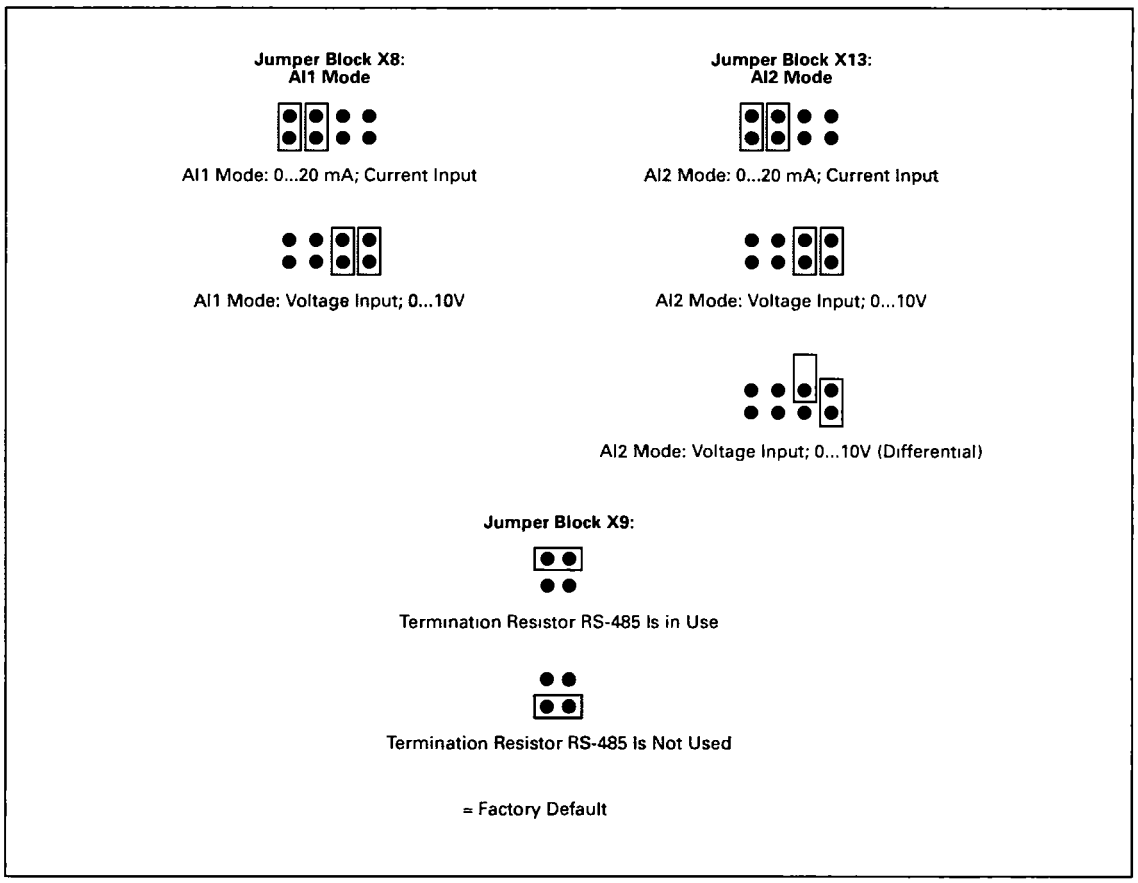

Figure 4-4: Jumper Selection for SLX9000, MF4 – MF6

⚠ CAUTION

Check the correct positions of the jumpers. Running the motor with signal settings different from the jumper positions will not harm the drive but may damage the motor.

Note: If you change the AI signal content also remember to change the corresponding parameters (S6.9.1, 6.9.2) in System Menu.

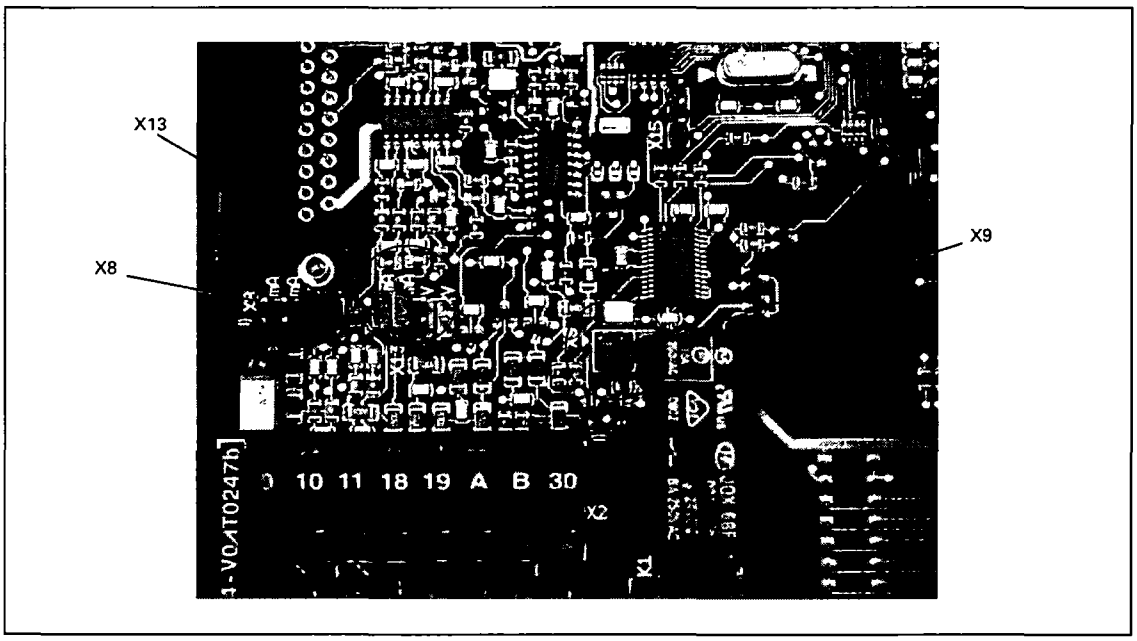

Figure 4-5: Location of Jumper Blocks in the Control Board of MF4 – MF6, 460V

Motor Thermistor (PTC) Connection

There are three ways to connect a PTC resistor to SLX9000.

1. With optional board OPTAI (recommended method).

   SLX9000 drive equipped with OPTAI fulfills IEC 664 if the motor thermistor is insulated (= effective double insulation).

2. With optional board OPTB2.

   SLX9000 drive equipped with OPTB2 fulfills IEC 664 if the motor thermistor is insulated (= effective double insulation).

3. With the digital input (DIN3) of SLX9000 drive.

   The DIN3 is galvanically connected to other I/Os of SLX9000. This is why reinforced or double insulation of the thermistor (IEC 664) is absolutely required outside the drive (in the motor or between the motor and the drive).

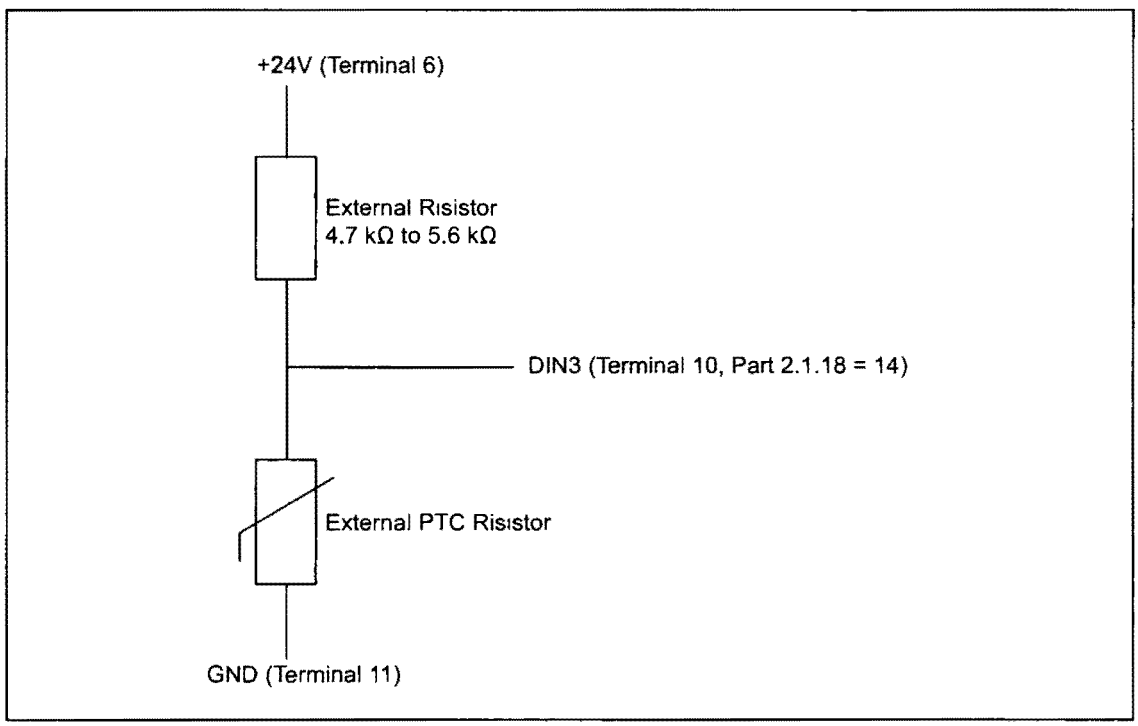

Figure 4-6: Motor Thermistor (PTC) Connection

Note: The drive trips when PTC impedance exceeds 4.7 kΩ.

We strongly recommend the use of OPTAI or OPTB2 board for motor thermistor connection.

⚠ WARNING

If the motor thermistor is connected to DIN3, the instructions above **must be** followed, otherwise a serious safety hazard may result from the connection.

January 2009

Chapter 5 — Menu Information

Keypad Operation

The control keypad is the link between the SLX9000 drive and the user. The control keypad features an alphanumeric display with seven indicators for the Run status (RUN, counterclockwise, clockwise, READY, STOP, ALARM, FAULT) and three indicators for the control place (I/O term/Keypad/BusComm).

The control information, i.e. the menu number, the displayed value and the numeric information are represented with numeric symbols.

The drive is operable through the seven pushbuttons of the control keypad. Furthermore, the buttons can be used in setting parameters and monitoring values.

The keypad is detachable and isolated from the input line potential.

Indicators on the Keypad Display

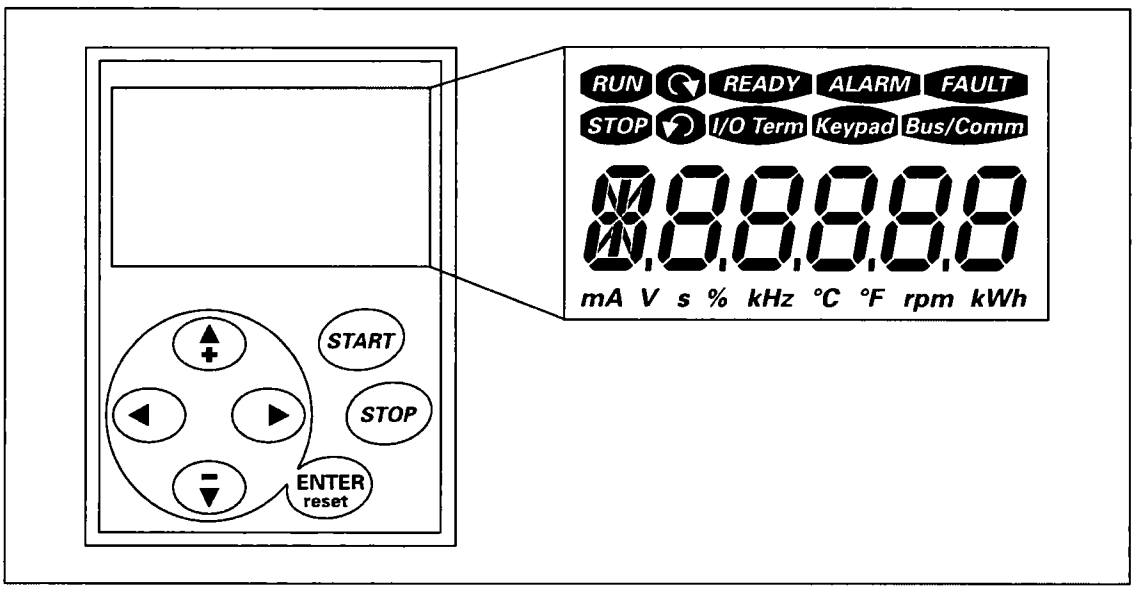

Figure 5-1: Control Keypad and Drive Status Indications

Drive Status Indicators

The drive status symbols tell the user the status of the motor and the drive.

Table 5-1: Drive Status Indicators

Indicator	Description
RUN	**RUN** Motor is running; Blinks when the stop command has been given but the frequency is still ramping down.
	Indicates the direction of motor rotation.
STOP	**STOP** Indicates that the drive is not running.
READY	**READY** Lights up when AC power is on. In case of a fault, the symbol will not light up.
ALARM	**ALARM** Indicates that the drive is running outside a certain limit and a warning is given.
FAULT	**FAULT** Indicates that unsafe operating conditions were encountered due to which the drive was stopped.

Control Place Indicators

The symbols I/O term, Keypad and Bus/Comm (see **Table 5-2**) indicate the choice of control place made in the Keypad control menu (M3) (see **Table 5-6**).

Table 5-2: Control Place Indicators

Indicator	Description
I/O Term	**I/O Terminal** I/O terminals are selected as the control place i.e. START/STOP commands or reference values etc. are given through the I/O terminals.
Keypad	**Keypad** Control keypad is selected as the control place i.e. the motor can be started or stopped, or its reference values etc. altered from the keypad.
Bus/comm	**Bus/Comm** The drive is controlled through a fieldbus.

Numeric Indicators

The numeric indications provide the user with information on present location in the keypad menu structure as well as with information related to the operation of the drive.

Keypad Pushbuttons

The SLX9000 seven-segment control keypad features seven pushbuttons that are used for the control of the DRIVE (and motor) and parameter setting.

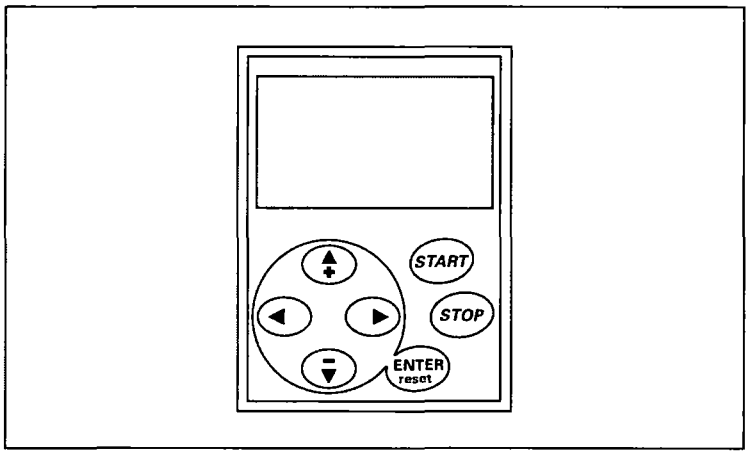

Figure 5-2: Keypad Pushbuttons

Table 5-3: Button Descriptions

Indicator	Description
ENTER reset	There are two operations integrated in this button. The button operates mainly as RESET button except in the parameter edit mode. The button operation is shortly described below. The ENTER button serves for: 1. confirmation of selections 2. fault history reset (2 – 3 seconds) RESET is used to reset active faults. **Note:** The motor may start immediately after resetting the faults.
▲	**Browser Button Up** Browse the main menu and the pages of different submenus. Edit values.
▼	**Browser Button Down** Browse the main menu and the pages of different submenus. Edit values.
◀	**Menu Button Left** Move backward in menu. Move cursor left (in parameter menu). Exit edit mode. Press for 2 to 3 seconds to return to main menu.
▶	**Menu Button Right** Move forward in menu. Move cursor right (in parameter menu). Enter edit mode.
START	**START Button** Pressing this button starts the motor if the keypad is the active control place. See **Page 5-10**.
STOP	**STOP Button** Pressing this button stops the motor (unless disabled by parameter P3.4). See **Page 5-10**. STOP button also serves for activating the Start-Up Wizard (see **Page 6-4**).

Menu Navigation

The data on the control keypad are arranged in menus and submenus. The menus are used for the display and editing of measurement and control signals, parameter settings (see **Page 5-8**) and reference value (see **Page 5-11**) and fault displays (see **Page 5-11**).

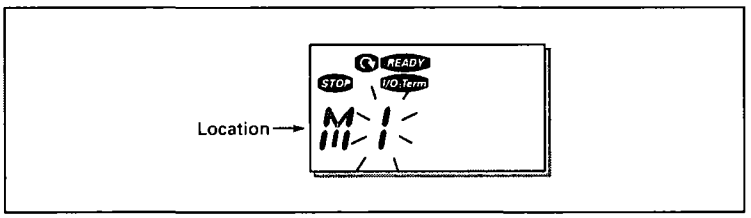

Figure 5-3: Keypad Display Data

The first menu level consists of menus M1 to E7 and is called the Main Menu. The user can navigate in the main menu with the Browser buttons up and down. The desired submenu can be entered from the main menu with the Menu buttons. When there still are pages to enter under the currently displayed menu or page, the last digit of the figure blinks and you can reach the next menu level by pressing Menu Button Right.

The control keypad navigation chart is shown in **Figure 5-4**. Please note that menu **M1** is located in the lower left corner. From there you will be able to navigate your way up to the desired menu using the menu and browser buttons.

You will find more detailed descriptions of the menus later in this chapter.

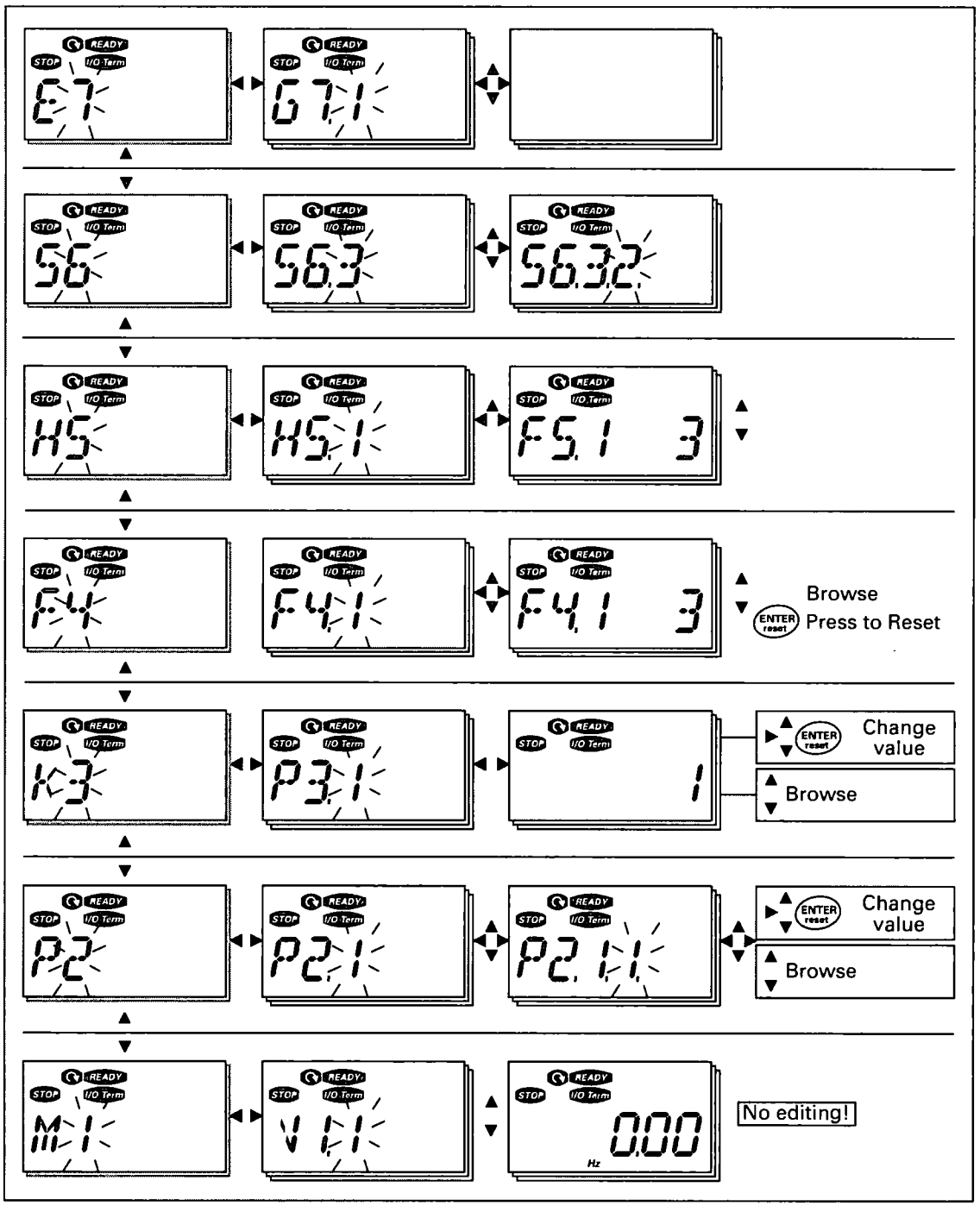

Figure 5-4: Keypad Navigation Chart

Table 5-4: Main Menu Functions

Code	Menu	Min.	Max.	Selections
M1	Monitoring menu	V1.1	V1.24	**See Page 5-7 for the monitoring values**
P2	Parameter menu	P2.1	P2.10	P2.1 = Basic parameters P2.2 = Input signals P2.3 = Output signals P2.4 = Drive control P2.5 = Prohibit frequencies P2.6 = Motor control P2.7 = Protections P2.8 = Autorestart P2.9 = PID control P2.10=Pump and fan control **See the Multi-control application manual for detailed parameter lists**
K3	Keypad control menu	P3.1	P3.6	P3.1 = Selection of control place R3.2 = Keypad reference P3.3 = Keypad direction P3.4 = Stop button activation P3.5 = PID reference 1 P3.6 = PID reference 2
F4	Active faults menu			Shows the active faults and their types
H5	Fault history menu			Shows the fault history list
S6	System menu	S6.3	S6.10	S6.3 = Copy parameters S6.5 = Security S6.6 = Keypad settings S6.7 = Hardware settings S6.8 = System info S6.9 = AI mode S6.10 = Fieldbus parameters **Parameters are described on Page 5-13**
E7	Expander board menu			

Monitoring Menu (M1)

You can enter the Monitoring menu from the Main menu by pressing Menu Button Right when the location indication **M1** is visible on the display. **Figure 5-5** shows how to browse through the monitored values.

The monitored signals carry the indication **V#.#** and listed in **Table 5-5**. The values are updated once every .3 seconds.

This menu is for signal checking. The values cannot be changed. To change values of the parameters, see **Page 5-8**.

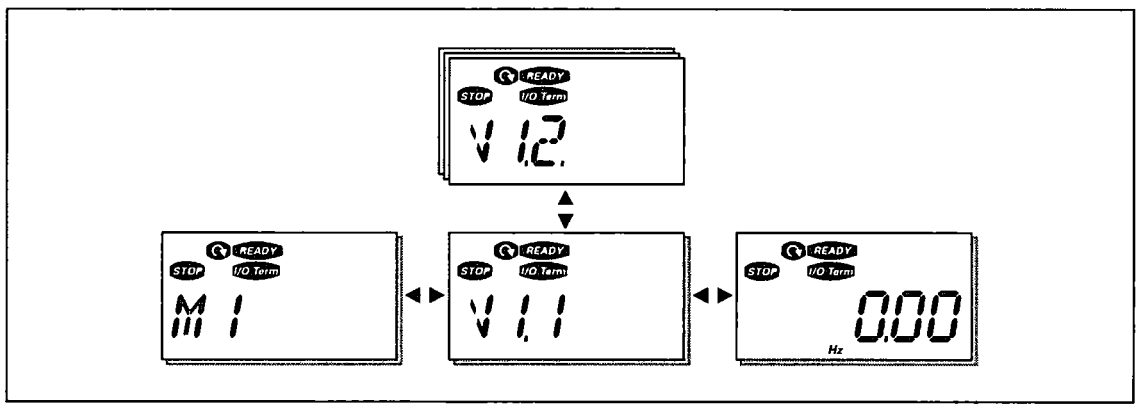

Figure 5-5: Monitoring Menu

Table 5-5: Monitored Signals

Code	Signal Name	Unit	ID	Description
V1.1	Output frequency	Hz	1	Frequency to the motor
V1.2	Frequency reference	Hz	25	
V1.3	Motor speed	rpm	2	Calculated motor speed
V1.4	Motor current	A	3	Measured motor current
V1.5	Motor torque	%	4	Calculated actual torque/nominal torque of the motor
V1.6	Motor power	%	5	Calculated actual power/nominal power of the motor
V1.7	Motor voltage	V	6	Calculated motor voltage
V1.8	DC-link voltage	V	7	Measured DC-link voltage
V1.9	Unit temperature	°C	8	Heatsink temperature
V1.10	Analog input 1		13	AI1
V1.11	Analog input 2		14	AI2
V1.12	Analog output current	mA	26	AO1
V1.13	Analog output current 1, expander board	mA	31	
V1.14	Analog output current 2, expander board	mA	32	
V1.15	DIN1, DIN2, DIN3		15	Digital input statuses
V1.16	DIE1, DIE2, DIE3		33	I/O expander board: Digital input statuses
V1.17	RO1		34	Relay output 1 status
V1.18	ROE1, ROE2, ROE3		35	I/O exp. board: Relay output statuses
V1.19	DOE1		36	I/O exp. board: Digital output 1 status
V1.20	PID Reference	%	20	In percent of the maximum process reference
V1.21	PID Actual value	%	21	In percent of the maximum actual value
V1.22	PID Error value	%	22	In percent of the maximum error value
V1.23	PID Output	%	23	In percent of the maximum output value
V1.24	Autochange outputs 1, 2, 3		30	Used only in pump and fan control

Parameter Menu (P2)

Parameter values can be edited by entering the Parameter Menu from the Main Menu when the location indication **P2** is visible on the display. The value editing procedure is presented in **Figure 5-6.**

Pressing Menu Button Right once takes you to the Parameter Group Menu (G#). Locate the desired parameter group by using the Browser buttons and press Menu Button Right again to see the group and its parameters. Use the Browser buttons to find the parameter (P#) you want to edit. Pressing Menu Button Right takes you to the edit mode. As a sign of this, the parameter value starts to blink. You can now change the value in two different ways:

- Set the desired value with the Browser buttons and confirm the change with the ENTER button. Consequently, the blinking stops and the new value is visible in the value field.
- Press Menu Button Right once more. Now you will be able to edit the value digit by digit. This may come in handy, when a relatively greater or smaller value than that on the display is desired. Confirm the change with the ENTER button.

The value will not change unless the ENTER button is pressed. Pressing Menu Button Left takes you back to the previous menu.

Several parameters are locked, i.e. cannot be edited, when the drive is in RUN status. The drive must be stopped to edit these parameters.

The parameter values can also be locked using the function in menu **S6** (see **Page 5-16**).

You can return to the Main Menu any time by pressing Menu Button Left for 1 to 2 seconds.

The basic parameters are listed in **Chapter 6**. You will find the complete parameter lists and descriptions in the *Multi-Control Application* manual.

Once in the last parameter of a parameter group, you can move directly to the first parameter of that group by pushing the Browser button up.

Once in the last parameter of a parameter group, you can move directly to the first parameter of that group by pressing Browser Button Up.

See the diagram for parameter value change procedure in **Figure 5-6.**

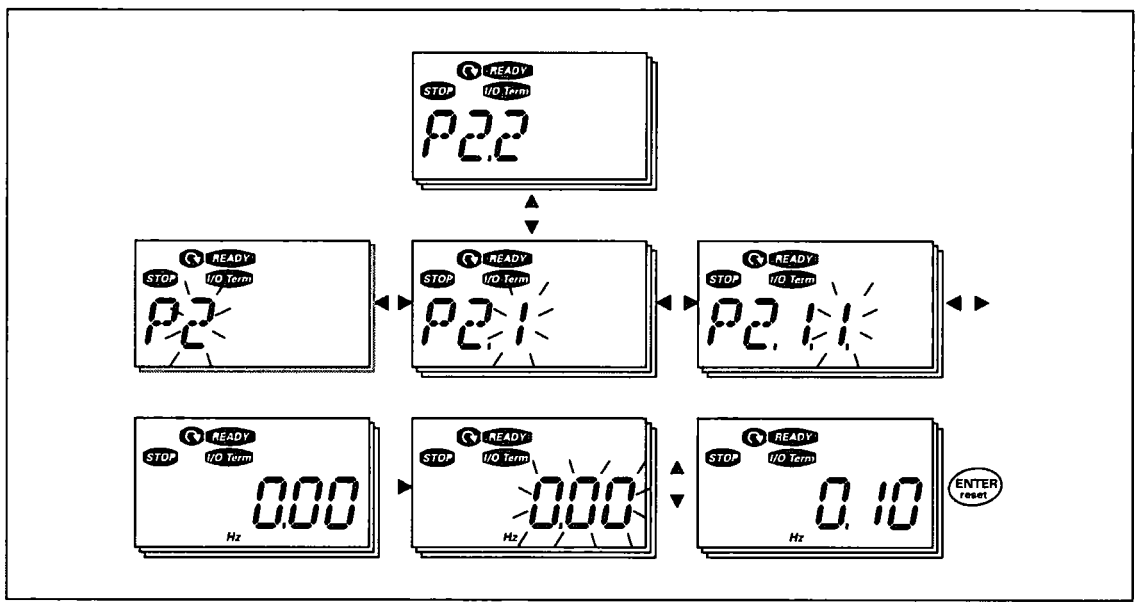

Figure 5-6: Parameter Value Change Procedure

Keypad Control Menu (K3)

In the Keypad Control Menu, you can choose the control place, edit the frequency reference and change the direction of the motor. You can enter the submenu level by pressing Menu Button Right.

Table 5-6: Keypad Control Menu Selections

Parameters in Menu K3	Selections
P3.1 = Selection of control place	**1** = I/O terminals **2** = Keypad **3** = Fieldbus
R3.2 = Keypad reference	
P3.3 = Keypad direction	**0** = Forward **1** = Reverse
P3.4 = Stop button activation	**0** = Limited function of Stop button **1** = Stop button always enabled
P3.5 = PID reference 1	
P3.6 = PID reference 2	

Selection of Control Place

There are three different places (sources) where the drive can be controlled. For each control place, a different symbol will appear on the alphanumeric display:

- I/O terminals
- Keypad (panel)
- Fieldbus

You can change the control place by entering the edit mode with Menu Button Right. The options can then be browsed with the Browser buttons. Select the desired control place with the ENTER button. See **Figure 5-7**.

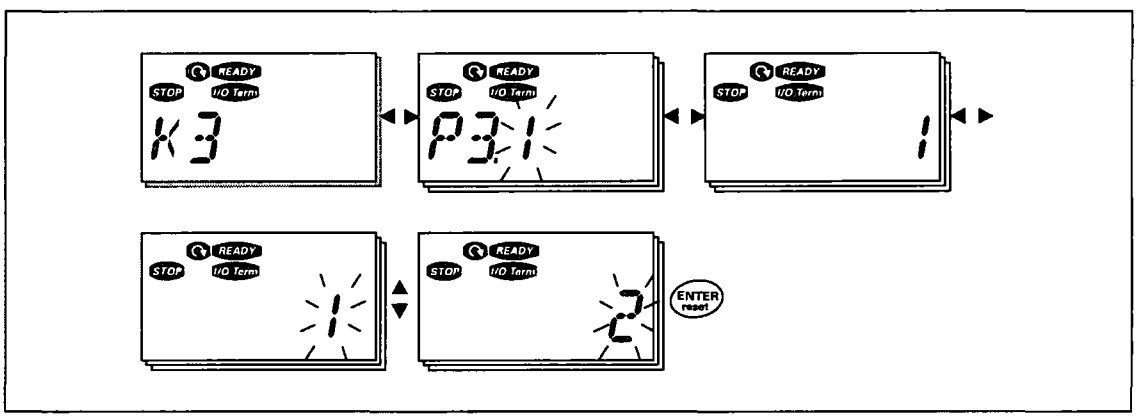

Figure 5-7: Selection of Control Place

Keypad Reference

The keypad reference submenu (**R3.2**) displays and allows the operator to edit the frequency reference. The changes will take place immediately. **This reference value will not, however, influence the rotation speed of the motor unless the keypad has been selected as the active control place.**

Note: The maximum difference between the output frequency and the keypad reference is 6 Hz. The program automatically monitors the keypad reference value.

You may edit the reference value (pressing the ENTER button is not necessary). See **Figure 5-6.**

Keypad Direction

The keypad direction submenu displays and allows the operator to change the rotating direction of the motor. **This setting will not, however, influence the rotation direction of the motor unless the keypad has been selected as the active control place.**

Note: See **Table 5-6** for how to change the rotation direction.

STOP Button Activated

By default, pushing the STOP button will **always** stop the motor regardless of the selected control place. You can disable this function by giving parameter 3.4 the value **0.** If the value of this parameter is **0,** the STOP button will stop the motor only **when the keypad has been selected as the active control place.**

Note: See **Table 5-6** for how to change the value of this parameter.

Active Faults Menu (F4)

You can enter the Active Faults menu from the Main Menu by pressing Menu Button Right when the location indication **F4** is visible on the keypad display.

The memory of active faults can store a maximum of five faults in the order of appearance. The display can be cleared with the RESET button and the read-out will return to the same state it was in before the fault trip. The fault remains active until it is cleared with the RESET button or with a reset signal from the I/O terminal.

Note: Remove external Start signal before resetting the fault to prevent unintentional restart of the drive.

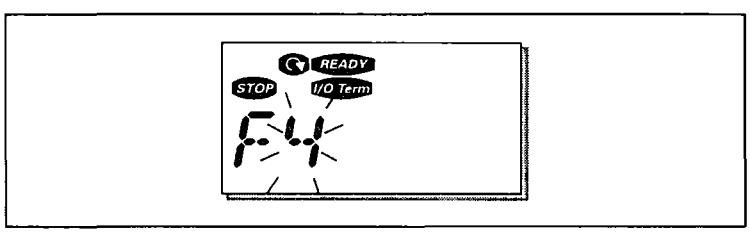

Figure 5-8: Normal State, No Faults

Fault Types

The drive has two types of faults. These types differ from each other on the basis of the subsequent behavior of the drive. See **Table 5-7**.

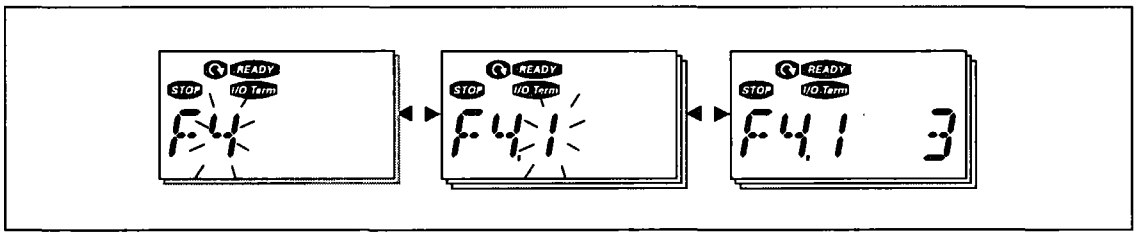

Figure 5-9: Fault Display

Table 5-7: Fault Types

Fault Type Symbol	Meaning
A (Alarm)	This type of fault is a sign of an unusual operating condition. It does not cause the drive to stop, nor does it require any special actions. The "A fault" remains in the display for about 30 seconds.
F (Fault)	An "F fault" makes the drive stop. Actions need to be taken to restart the drive.

Note: Fault Codes are listed in **Appendix A.**

Fault History Menu (H5)

You can enter the Fault History menu from the Main Menu by pressing Menu Button Right when the location indication **H5** is visible on the keypad display.

All faults are stored in the Fault History menu where you can browse them with the Browser buttons. You can return to the previous menu any time by pressing Menu Button Left.

The memory of the drive can store a maximum of 5 faults in order of appearance. The latest fault is indicated by H5.1, the one before that by H5.2 and so on. If there are 5 uncleared faults in the memory, the next fault will erase the oldest fault from the memory.

Pressing the ENTER button for about 2 to 3 seconds resets the whole fault history.

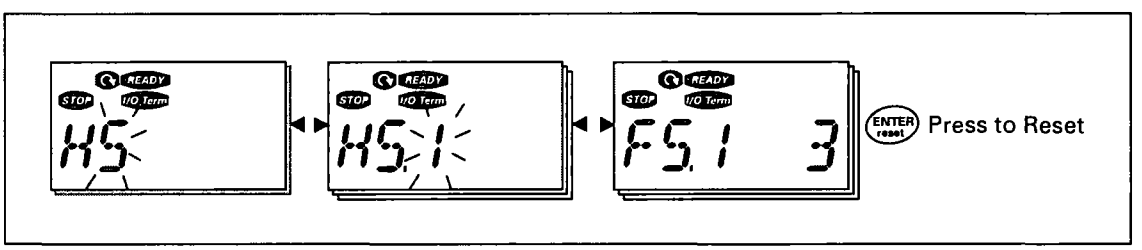

Figure 5-10: Fault History Menu

System Menu (S6)

You can enter the System Menu from the Main menu by pressing Menu Button Right when the location indication **S6** is visible on the first line of the keypad display.

The controls associated with the general use of the drive, such as keypad settings, customized parameter sets or information about the hardware and software are located under the System Menu.

Table 5-8 has a list of the functions available in the System Menu.

Table 5-8: System Menu Functions

Code	Function	Min.	Max.	Unit	Default	Cust.	Selections
S6.3	**Copy parameters**						
P6.3.1	Parameter sets						**0** = Select **1** = Store set 1 **2** = Load set 1 **3** = Store set 2 **4** = Load set 2 **5** = Load factory defaults **6** = Fault **7** = Wait **8** = OK
S6.5	**Security**						
P6.5.2	Parameter lock	0	1		0		**0** = Change Enabled **1** = Change Disabled
S6.6	**Keypad settings**						
P6.6.1	Default page	0			1.1		
P6.6.3	Timeout time	5	65535	s	1200		
S6.7	**Hardware settings**						
P6.7.2	Fan control	0			0		**0** = Continuous **1** = Temperature (only sizes MF4 and larger)
P6.7.3	HMI acknowledg. timeout	200	5000	mS	200		
P6.7.4	HMI number of retries	1	10		5		
S6.8	**System info**						
S6.8.1	Counters menu						
C6.8.1.1	Mwh counter			KWh			
C6.8.1.2	Operating days counter			hh:mm: ss			
C6.8.1.3	Operating hours counter			hh:mm: ss			
S6.8.2	Trip counters						
T6.8.2.1	MWh trip counter			kWh			
P6.8.2.2	Clear MWh trip counter						**0** = No action **1** = Clear MWh trip counter
T6.8.2.3	Operating days trip counter						

Table 5-8: System Menu Functions (Continued)

Code	Function	Min.	Max.	Unit	Default	Cust.	Selections
T6.8.2.4	Operating hours trip counter			hh:mm: ss			
P6.8.2.5	Clear operating time counter						**0** = No action **1** = Clear T6.8.2.3, T6.8.2.4
S6.8.3	Software info						
I6.8.3.1	Software package						Scroll information with menu button right
I6.8.3.2	System SW version						
I6.8.3.3	Firmware interface						
I6.8.3.4	System load			%			
S6.8.4	Application info						
S6.8.4.1	Application						
A6.8.4.1.1	Application ID						
A6.8.4.1.2	Application version						
A6.8.4.1.3	Firmware interface						
S6.8.5	Hardware info						
I6.8.5.2	Unit voltage			V			
I6.8.5.3	Brake chopper						**0** = Not present, **1** = Present
S6.8.6	Options						
S6.8.6.1	Slot E OPT-						**Note:** the submenus do not show if no option board is installed
I6.8.6.1.1	Slot E status	1	5				**1** = Connection lost **2** = Initializing **3** = Run **5** = Fault
I6.8.6.1.2	Slot E program version						
S6.8.6.2	Slot D OPT-						**Note:** the submenus do not show if no option board is installed
I6.8.6.2.1	Slot D status	1	5				**1** = Connection lost **2** = Initializing **3** = Run **5** = Fault
I6.8.6.2.2	Slot D program version						
S6.9	AI mode						
P6.9.1	AIA1 mode	0	1		0		**0** = Voltage input **1** = Current input (Types MF4 – MF6)
P6.9.2	AIA2 mode	0	1		1		**0** = Voltage input **1** = Current input
S6.10	Fieldbus parameters						
I6.10.1	Communication status						

Table 5-8: System Menu Functions (Continued)

Code	Function	Min.	Max.	Unit	Default	Cust.	Selections
P6.10.2	Fieldbus protocol	1	1		1		**0** = Not used **1** = Modbus protocol
P6.10.3	Slave address	1	255		1		Addresses 1 – 255
P6.10.4	Baud rate	0	8		5		**0** = 300 baud **1** = 600 baud **2** = 1200 baud **3** = 2400 baud **4** = 4800 baud **5** = 9600 baud **6** = 19200 baud **7** = 38400 baud **8** = 57600 baud
P6.10.5	Stop bits	0	1		0		**0** = 1 **1** = 2
P6.10.6	Parity type	0	2		0		**0** = None **1** = Odd **2** = Even
P6.10.7	Communication timeout	0	300	s	0		**0** = Not used **1** = 1 second **2** = 2 seconds, etc.

Copy Parameters

The Copy parameters submenu (**S6.3**) is located under the System menu.

The SLX9000 drive allows the user to store and load two customized parameter sets (all parameters included in the application, not the system menu parameters) and to load back the factory default parameter values.

Parameter Sets (S6.3.1)

On Parameter sets page (**S6.3.1**), push the Menu Button Right to enter the Edit menu. You can store or load two customized parameter sets or load back the factory defaults. Confirm with the ENTER button. Wait until **8 (=OK)** appears on the display.

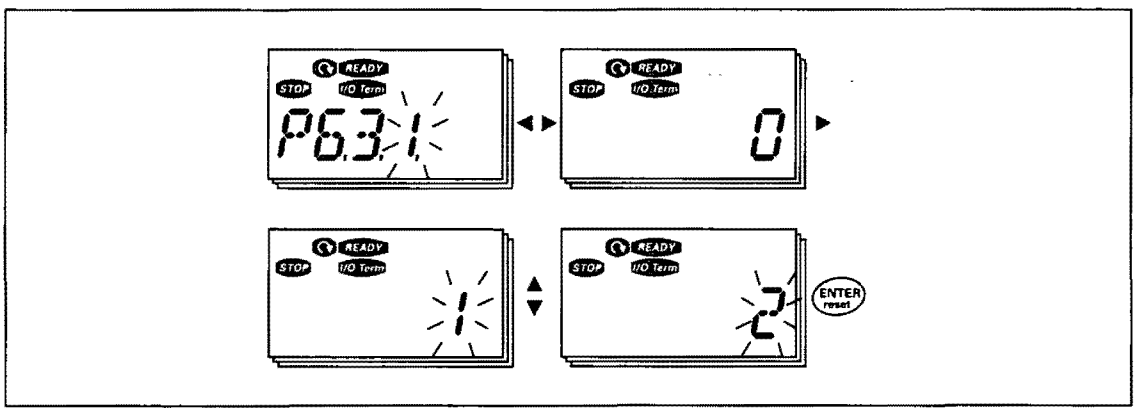

Figure 5-11: Storing and Loading of Parameter Sets

Security

The Security submenu (**S6.5**) under the system menu has a function that allows the user to prohibit changes to the parameters.

Parameter Lock (P6.5.2)

If the parameter lock is activated the parameter values cannot be edited.

Note: This function does not prevent unauthorized editing of parameter values.

Enter the edit mode by pushing the Menu Button Right. Use the Browser buttons to change the parameter lock status (**0** = changes enabled, **1** = changes disabled). Accept the change with the ENTER button or return to the previous level with the Menu Button Left.

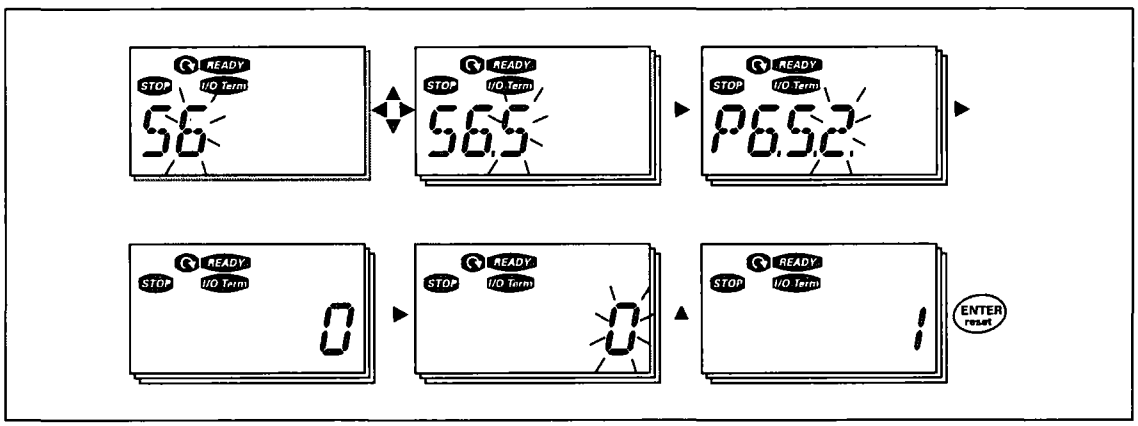

Figure 5-12: Parameter Locking

Keypad Settings

In the Keypad Settings submenu under the System menu, you can further customize your drive operator interface.

Locate the Keypad Setting submenu (**S6.6**). Under the submenu, there are two pages (**P#**) associated with the keypad operation:

Default Page (P6.6.1)

Here you can set the location (page) to which the display automatically moves as the Timeout Time (see below) has expired or as the power is switched on to the keypad.

Press the Menu Button Right once to enter the edit mode. Pressing the Menu Button Right once again makes you able to edit the number of the submenu/page digit by digit. Confirm the new default page value with the ENTER button. You can return to the previous step anytime by pushing the Menu Button Left.

Note: If you set a page that does not exist in the menu, the display will automatically move to the last available page in the menu.

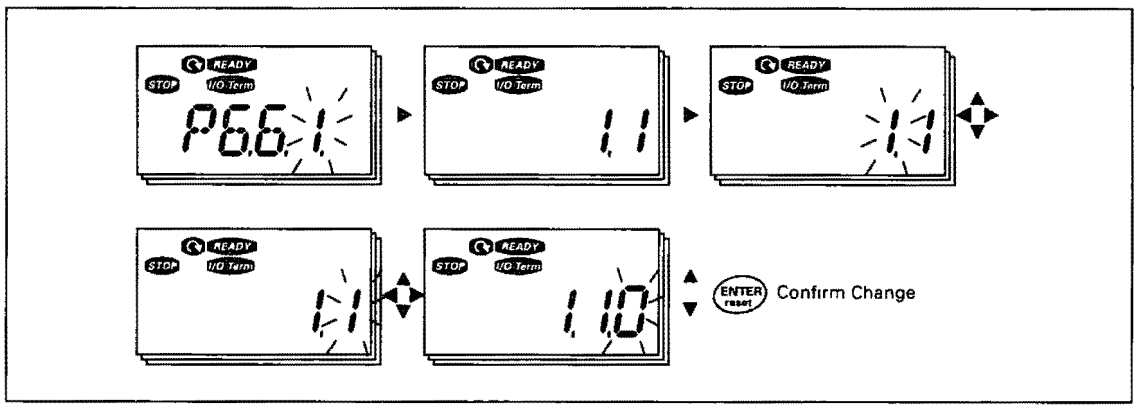

Figure 5-13: Default Page Function

Timeout Time (P6.6.3)

The Timeout Time setting defines the time after which the keypad display returns to the Default page (P6.6.1).

Enter the edit mode by pressing Menu Button Right. Set the desired timeout time and confirm it with the ENTER button. You can return to the previous menu at any time by pressing Menu Button Left.

Note: This function cannot be disabled.

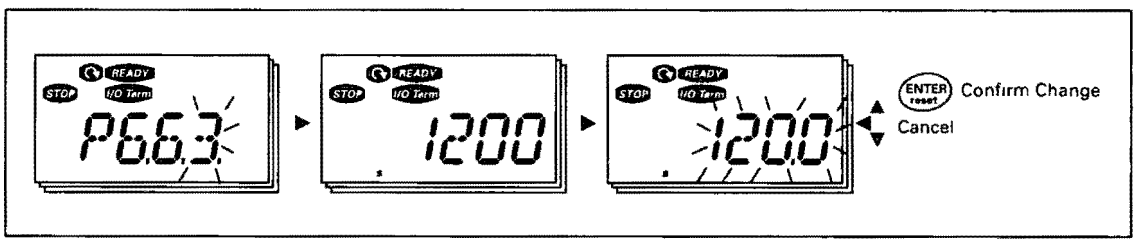

Figure 5-14: Timeout Time Setting

Hardware Settings

In the Hardware settings submenu (S6.7) you can further customize the settings of the drive with three parameters: Fan control, HMI acknowledgement timeout and HMI retry.

Fan Control (P6.7.2)

Note: Only the higher power modules of MF3 have been equipped with a cooling fan, in lower power modules of MF3 the cooling fan is available as optional equipment.

If the cooling fan has been installed in MF3 it runs continuously when the power is switched on.

This function allows you to control the drive's cooling fan. You can set the fan to run continuously when the power is switched on or depending on the temperature of the unit. If the latter function has been selected the fan is switched on automatically when the heatsink temperature reaches 60°C. The fan receives a stop command when the heatsink temperature falls to 55°C. However the fan runs for about a minute after receiving the stop command, as well as after changing the value from **0** *(Continuous)* to **1** *(Temperature).*

Enter the edit mode by pushing the Menu Button Right. The present mode shown starts to blink. Use the Browser buttons to change the fan mode. Accept the change with the ENTER button or return to the previous level with the Menu Button Left.

HMI Acknowledge Timeout (P6.7.3)

This function allows the user to change the timeout of the HMI acknowledgement time.

Note: If the drive has been connected to the PC with a **normal cable**, the default values of parameters 6.7.3 and 6.7.4 (200 and 5) **must not be changed.**

If the drive has been connected to the PC via a modem and there is delay in transferring messages, the value of par. 6.7.3 must be set according to the delay as follows:

Example:

- Transfer delay between the drive and the PC = 600 ms
- The value of par. 6.7.3 is set to 1200 mS (2 x 600, sending delay + receiving delay)
- The corresponding setting shall be entered in the (Misc)-part of the file NCDrive.ini:
  - Retries = 5
  - AckTimeOut = 1200
  - TimeOut = 6000

It must also be considered that intervals that are shorter than the AckTimeOut-time cannot be used in NC-Drive monitoring.

Enter the edit mode by pushing the Menu Button Right. Use the Browser buttons to change the acknowledgement time. Accept the change with the ENTER button or return to the previous level with the Menu Button Left. See **Figure 5-15** for how to change the HMI acknowledgement timeout.

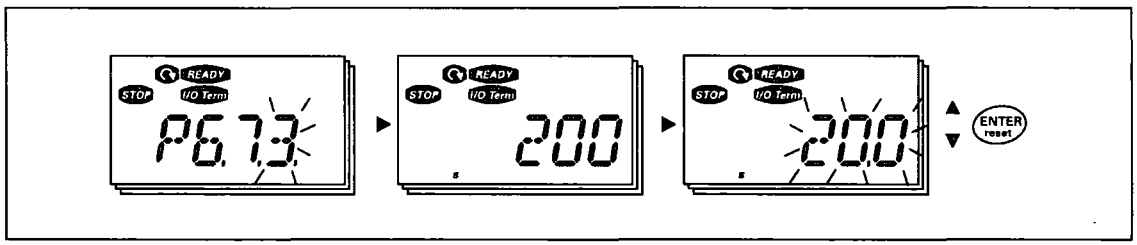

Figure 5-15: HMI Acknowledge Timeout

Number of Retries to Receive HMI Acknowledgement (P6.7.4)

With this parameter you can set the number of times the drive will try receive acknowledgement if this does not succeed within the acknowledgement time (P6.7.3)

Enter the edit mode by pushing the Menu Button Right. The present value shown starts to blink. Use the Browser buttons to change the amount of retries. Accept the change with the ENTER button or return to the previous level with the Menu Button Left.

System Information

In the submenu S6.8 under the System menu you can find drive-related hardware and software information as well as operation-related information.

Enter the Info menu by pressing the Menu Button Right. Now you can browse through the information pages with the Browser buttons.

Counters Submenu (S6.8.1)

In the Counters submenu (**S6.8.1**) you can find information related to the drive operation times, i.e. the total numbers of MWh, operation days and operation hours passed so far. Unlike the counters in the trip counters menu, these counters cannot be reset.

Note: The operation time counter (days and hours) always runs when the power is on.

Table 5-9: Counter Pages

Page	Counter
C6.8.1.1	MWh counter
C6.8.1.2	Operation day counter
C6.8.1.3	Operation hour counter

Trip Counters Submenu (S6.8.2)

Trip counters (menu **S6.8.2**) are counters with values of which can be reset i.e. restored to zero. You have the following resettable counters at your disposal:

Table 5-10: Trip Counter Pages

Page	Counter
C6.8.2.1	MWh counter
P6.8.2.2	Clear mWh counter
T6.8.2.3	Operation day counter
T6.8.2.4	Operation hour counter
P6.8.2.5	Clear operation time counter

Note: The trip counters only run when the motor is running.

Example: When you want to reset the operation counters, you should do the following:

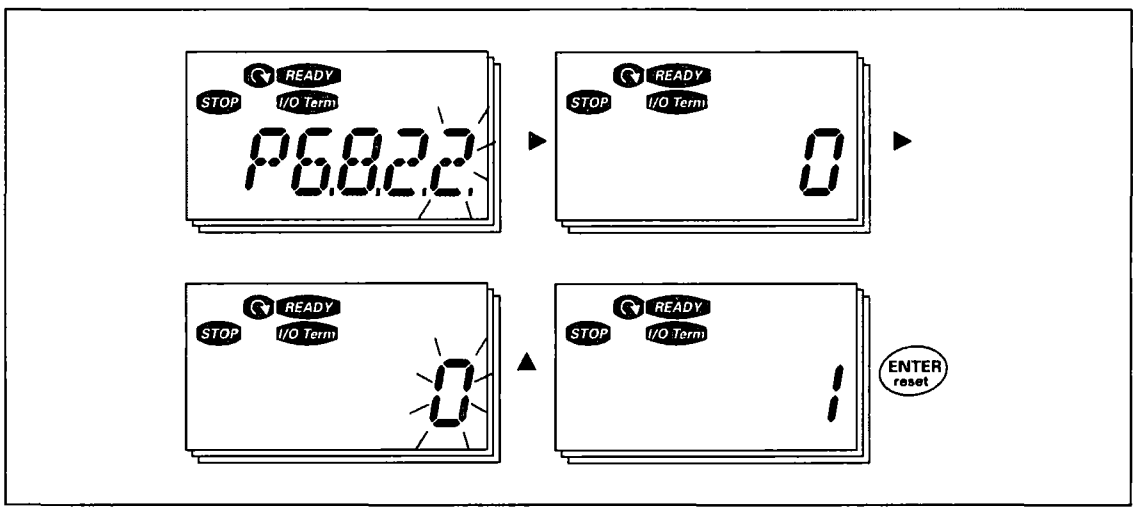

Figure 5-16: MWh Counter Reset

Software Into Submenu (S6.8.3)

The following information can be found under the Software Info submenu (S6.8.3):

Table 5-11: Software Information Pages

Page	Content
I6.8.3.1	Software package
I6.8.3.2	System software version
I6.8.3.3	Firmware interface
I6.8.3.4	System load

Application Information Submenu (S6.8.4)

You can find the following information from the Application Info submenu (S6.8.4):

Table 5-12: Application Information Pages

Page	Content
A6.8.4.1	Application
D6.8.4.1.1	Application ID
D6.8.4.1.2	Version
D6.8.4.1.3	Firmware interface

Hardware Information Submenu (S.8.5)

You can find the following information from the Hardware Info submenu (S6.8.5):

Table 5-13: Hardware Information Pages

Page	Content
I6.8.5.2	Unit voltage
I6.8.5.3	Brake chopper

Connected Options Submenu (S6.8.6)

The Connected options submenu (S6.8.6) shows the following information on the option board connected to the drive:

Table 5-14: Connected Options Submenu

Page	Content
S6.8.6.1	Slot E option board
I6.8.6.1.1	Slot E option board status
I6.8.6.1.2	Slot E program version
S6.8.6.2	Slot D option board
I6.8.6.2.1	Slot D option board status
I6.8.6.2.2	Slot D program version

In this submenu you find information about the option board connected to the control board (see **Chapter 4**).

You can check the status of the slot by entering the board submenu with the Menu Button Right and using the Browser buttons. Push the Menu Button Right again to display the status of the board. The selections are shown in **Table 5-8.** The keypad will also display the program version of the respective board when you push either one of the Browser buttons.

For more information on the expander board-related parameters, see **Page 5-26.**

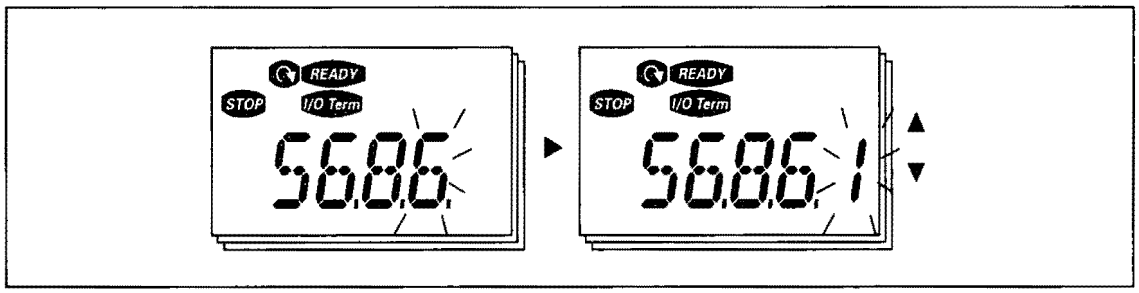

Figure 5-17: Expander Board Information Menu

AI mode

The parameters P6.9.1 and P6.9.2 select the analog input mode. **P6.9.1** appears only in classes MF4 – MF6.

0 = voltage input (par. 6.9.1 default)
1 = current input (par. 6.9.2 default)

Note: Make sure that the jumper selections correspond to the selections of this parameter. See **Figure 4-4**.

Modbus Interface

SLX9000 has a built-in Modbus RTU bus interface. The signal level of the interface is in accordance with the RS-485 standard.

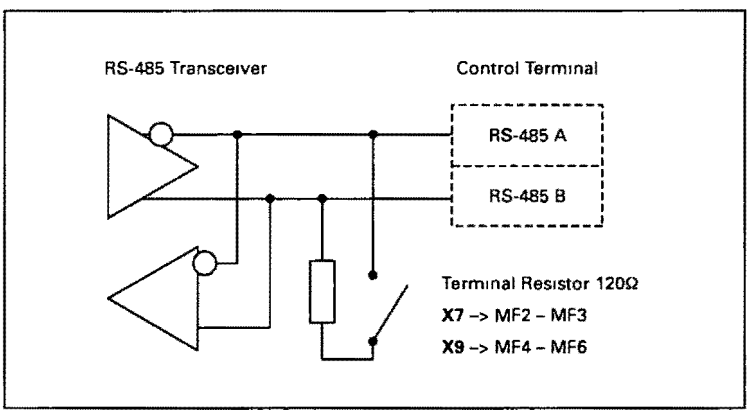

Figure 5-18: Modbus Interface

Protocol:	Modbus RTU
Baud rates:	300, 600, 1200, 2400, 4800, 9600, 19200, 38700, 57600 (bit/s)
Signal level:	RS-485 (TIA/EIA-485-A)
Input impedance:	2 kΩ

Modbus RTU Protocol

Modbus RTU protocol is a simple but effective fieldbus protocol. Modbus network has a bus topology, where every device has an individual address. With the help of the individual bus addresses the commands are directed to the single devices within the network. Modbus supports also broadcast-type messages, that are received by every device of the bus. Broadcast messages are sent to the address "0" which is reserved for these messages.

The protocol includes CRC error detection and parity check for preventing the handling of messages containing errors. In Modbus the data is transferred in hex mode a synchronically and a break of approximately 3.5 characters is used as an end character. The length of the break depends on the used baud rate.

Table 5-15: Modbus Commands Supported by SLX9000

Function Code	Function Name	Address	Broadcast Messages
03	Read Holding Register	All ID numbers	No
04	Read Input Register	All ID numbers	No
06	Preset Single Register	All ID numbers	Yes
16	Preset Multiple Register	All ID numbers	Yes

Termination Resistor

The RS-485 bus is terminated with 120Ω termination resistors in both ends. SLX9000 has a built-in termination resistor which is switched off as a default. See the jumper selections in **Chapter 4.**

Modbus Address Area

The Modbus bus of SLX9000 uses the ID numbers of the application as addresses. The ID numbers can be found in the parameter tables of the application manual.

When several parameters/monitoring values are read at a time they must be consecutive. 11 addresses can be read and the addresses can be parameters or monitoring values.

Modbus Process Data

Process data is an address area for fieldbus control. Fieldbus control is active when the value of parameter 3.1 (Control place) is **2** (= fieldbus). The contents of the process data has been determined in the application. The following tables present the process data contents in the Multi-Control Application.

Table 5-16: Output Process Data

Addr.	Modbus Register	Name	Scale	Type
2101	32101, 42101	FB Status Word	—	Binary coded
2102	32102, 42102	FB General Status Word	—	Binary coded
2103	32103, 42103	FB Actual Speed	0.01	%
2104	32104, 42104	Motor speed	0.01	+/- Hz
2105	32105, 42105	Motor speed	1	+/- Rpm
2106	32106, 42106	Motor current	0.1	A
2107	32107, 42107	Motor Torque	0.1	+/- % (of nominal)
2108	32108, 42108	Motor Power	0.1	+/- % (of nominal)
2109	32109, 42109	Motor Voltage	0.1	V
2110	32110, 42110	DC Voltage	1	V
2111	32111, 42111	Active Fault	—	Fault code

Table 5-17: Input Process Data

Addr.	Modbus Register	Name	Scale	Type
2001	32001, 42001	FB Control Word	—	Binary coded
2002	32002, 42002	FB General Control Word	—	Binary coded
2003	32003, 42003	FB Speed Reference	0.01	%
2004	32004, 42004	PID Control Reference	0.01	%
2005	32005, 42005	PID Actual Value	0.01	%
2006	32006, 42006	—	—	—
2007	32007, 42007	—	—	—
2008	32008, 42008	—	—	—
2009	32009, 42009	—	—	—
2010	32010, 42010	—	—	—
2011	32011, 42011	—	—	—

Table 5-18: Status Word

15	14	13	12	11	10	9	8	7	6	5	4	3	2	1	0
—	—	—	—	—	—	—	—	F	Z	AREF	W	FLT	DIR	RUN	RDY

Information about the status of the device and messages is indicated in the Status word. The Status word is composed of 16 bits the meanings of which are described in **Table 5-19**.

Table 5-19: Actual Speed

15	14	13	12	11	10	9	8	7	6	5	4	3	2	1	0
MSB	—	—	—	—	—	—	—	—	—	—	—	—	—	—	LSB

This is actual speed of the drive. The scaling is -10000 – 10000. In the application, the value is scaled in percentage of the frequency area between set minimum and maximum frequency.

Table 5-20: Control Word

15	14	13	12	11	10	9	8	7	6	5	4	3	2	1	0
—	—	—	—	—	—	—	—	—	—	—	—	—	RST	DIR	RUN

In SLX9000 applications, the three first bits of the control word are used to control the drive. However, you can customize the content of the control word for your own applications because the control word is sent to the drive as such.

Table 5-21: Speed Reference

15	14	13	12	11	10	9	8	7	6	5	4	3	2	1	0
MSB	—	—	—	—	—	—	—	—	—	—	—	—	—	—	LSB

This is the Reference 1 to the drive. Used normally as Speed reference. The allowed scaling is -10000 – 10000. In the application, the value is scaled in percentage of the frequency area between the set minimum and maximum frequencies.

Table 5-22: Bit Definitions

Bit	Description	
	Value = 0	**Value = 1**
RUN	Stop	Run
DIR	Clockwise	Counterclockwise
RST	Rising edge of this bit will reset active fault	
RDY	Drive not ready	Drive ready
FLT	No fault	Fault active
W	No warning	Warning active
AREF	Ramping	Speed reference reached
Z	—	Drive is running at zero speed
F	—	Flux Ready

Fieldbus Parameters

RS-485 Communication Status (I6.10.1)

With this function you can check the status of the RS-485 bus. If the bus is not in use, this value is **0**.

xx.yyy

xx = 0 – 64 (Number of messages containing errors)
yyy = 0 – 999 (Number of messages received correctly)

Fieldbus Protocol (P6.10.2)

With this function you can select the fieldbus communications protocol.

0 = Not used
1 = Modbus protocol

Slave Address (P6.10.3)

Sets the slave address for the Modbus protocol. You can set any address between 1 and 255.

Baud Rate (P6.10.4)

Selects the baud rate used with the Modbus communication.

0 = 300 baud
1 = 600 baud
2 = 1200 baud
3 = 2400 baud
4 = 4800 baud
5 = 9600 baud
6 = 19200 baud
7 = 38400 baud
8 = 57600 baud

Stop Bits (P6.10.5)

Sets number of stop bits used in Modbus communication.

0 = 1 stop bit
1 = 2 stop bits

Parity Type (P6.10.6)

Here you can select the type of parity checking used with the Modbus communication.

0 = None
1 = Odd
2 = Even

Communication time-out (P6.10.7)

If communication between two messages is broken for a longer time than that defined by this parameter, a communication error is initiated. If the value of this parameter is **0**, the function is not used.

0 = Not used
1 = 1 second
2 = 2 seconds, etc.

Expander Board Menu (E7)

The *Expander board menu* makes it possible for the user 1) to see which expander board is connected to the control board and 2) to reach and edit the parameters associated with the expander board.

Enter the following menu level (**E#**) with the Menu Button Right. You can view and edit the parameter values in the same way as described on **Page 5-8**.

Further Keypad Functions

The SLX9000 control keypad embodies additional application-related functions. See Eaton's *Multi-Control Application Manual* for more information.

January 2009

Chapter 6 — Start-Up

Safety Precautions

Before start-up, note the following directions and warnings:

⚠ WARNING

1. Internal components and circuit boards of the drive (except for the galvanically isolated I/O terminals) are **live** when the drive is connected to mains potential. **Coming into contact with this voltage is extremely dangerous and may cause death or severe injury.**
2. The motor terminals U, V, W and the DC-link/brake resistor terminals +/- are **live** when the drive is connected to DC supply, **even if the motor is not running.**
3. The control I/O-terminals are isolated from the mains potential. However, the relay outputs and other I/O-terminals may have a dangerous control voltage present even when the drive is disconnected from power supply.
4. Do not make any connections when the drive is connected to the power supply.
5. After having disconnected the drive, wait until the fan stops and the indicators on the keypad go out (if no keypad is attached see the indicator through the keypad base). Wait 5 more minutes before doing any work on drive connections. Do not open the cover before the time has expired.
6. Before connecting the drive to power supply, make sure that the drive's front cover is closed.

Sequence of Operation

1. Carefully read the safety instructions in the front of this manual and above and follow them.
2. After the installation, make sure that:
   - both the drive and the motor are grounded.
   - the power supply and motor cables comply with the requirements given in **Chapter 3**.
   - the control cables are located as far as possible from the power cables (see **Chapter 3**) and the shields of the shielded cables are connected to protective ground. The wires may not touch the electrical components of the drive.
   - **For option boards only**: make sure that the common ends of digital input groups are connected to +24V or ground of the I/O terminal or the external supply.
3. Check the quality and quantity of cooling air. (See **Chapter 2**, Mounting Space Dimensions.)
4. Check the inside of the drive for condensation.
5. Check that all Start/Stop switches connected to the I/O terminals are in Stop position.
6. Connect the drive to power supply.
7. Set the parameters of group 1 according to the requirements of your application (see application manual). At least the following parameters should be set:
   - motor nominal voltage
   - motor nominal frequency
   - motor nominal speed
   - motor nominal current

   You will find the values needed for the parameters on the motor nameplate.

   Note: You can also run the Start-Up Wizard. See **Page 6-4**.
8. Perform run test without motor.

   Perform either Test A or Test B:

   Test A — Controls from the I/O terminals:
   - Turn the Start/Stop switch to ON position.
   - Change the frequency reference (potentiometer).
   - Check in the Monitoring Menu M1 that the value of Output Frequency changes according to the change of frequency reference.
   - Turn the Start/Stop switch to OFF position.

Test B— Control from the control keypad:

- Change the control from the I/O terminals to the keypad as advised on **Page 5-10.**
- Press the START button on the keypad.
- Move over to the Keypad Control Menu K3 and Keypad Reference submenu (see Keypad Reference on **Page 5-11**) and change the frequency reference with the Browser up and down buttons.
- Check in Monitoring Menu M1 that the value of Output Frequency changes according to the change of frequency reference.
- Press the STOP button on the keypad.

9. Run the start-up tests without the motor being connected to the process. If this is not possible, make sure that running each test is safe prior to running it. Inform your co-workers of the tests.
   - Switch off the supply voltage and wait until the drive has stopped as advised on **Page 6-1**, Safety Precautions.
   - Connect the motor cable to the motor and to the motor cable terminals of the drive.
   - Make sure that all Start/Stop switches are in Stop positions.
   - Switch the supply voltage ON.
   - Repeat test 8A or 8B.
10. Connect the motor to the process (if the start-up test was run without the motor being connected).
    - Before running the tests, make sure that this can be done safely.
    - Inform your co-workers of the tests.
    - Repeat test 8A or 8B.

Start-Up Wizard

SLX9000 has a built-in start-up wizard, that speeds up the programming of the drive. The wizard helps you choose between four different operating modes, Standard, Fan, Pump and High Performance. Each mode has automatic parameter settings optimized for the mode in question. The programming wizard is started by pressing the STOP button for 5 seconds, when the drive is in stop mode. See **Figure 6-1** for the procedure:

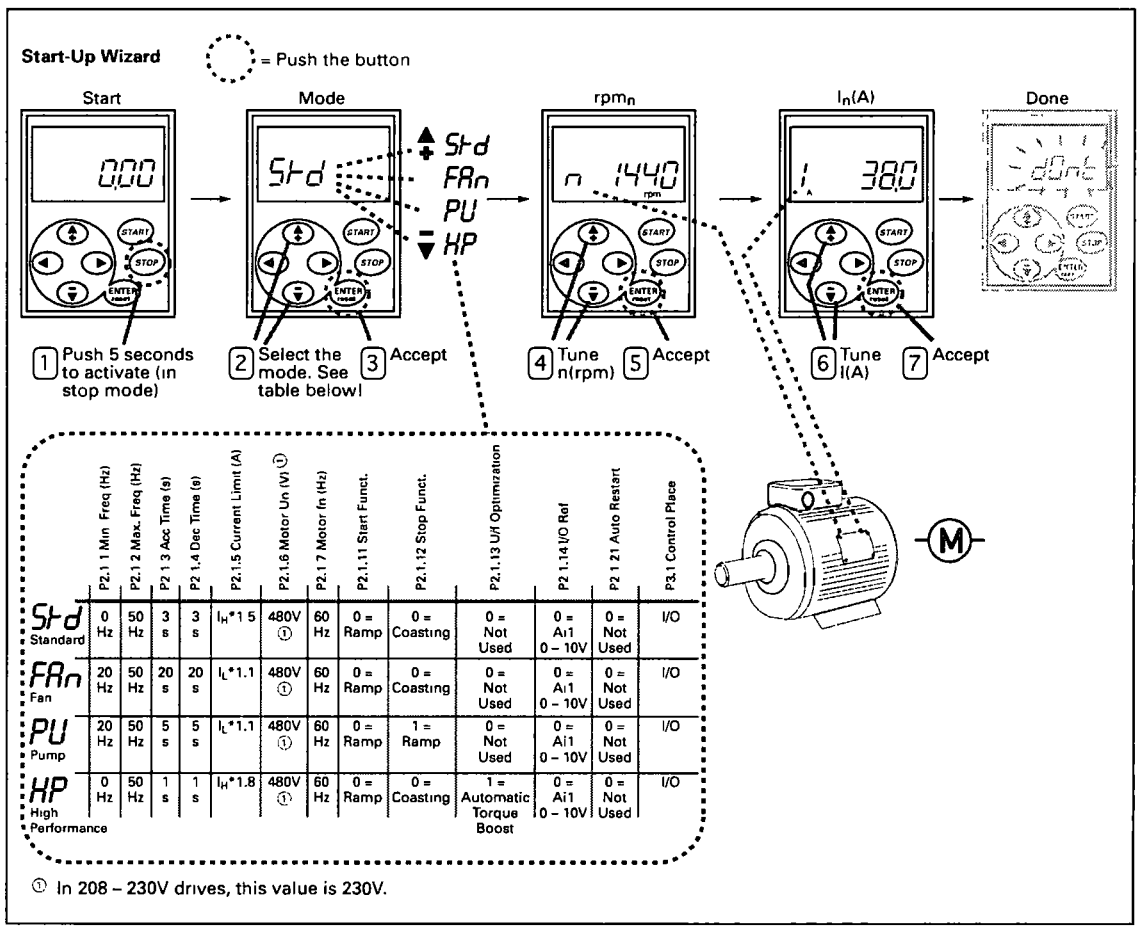

Figure 6-1: SLX9000 Start-Up Wizard

⚠ IMPORTANT

Start-Up Wizard returns all other parameters to factory defaults!

Note: See the application manual for detailed parameter descriptions.

January 2009

Chapter 7 — Basic Application

On the next pages you will find the list of parameters that are essential for the commissioning of the drive. You will find more details of these and other special parameters in **Chapter 9**.

Note: If you wish to edit the special parameters, you must set the value of par. 2.1.22 to 0.

Column explanations:

Code	=	Location indication on the keypad; Shows the operator the present param. number
Parameter	=	Name of parameter
Min	=	Minimum value of parameter
Max	=	Maximum value of parameter
Unit	=	Unit of parameter value; Given if available
Default	=	Value preset by factory
Cust	=	Customer's own setting
ID	=	ID number of the parameter (used with PC tools)
①	=	On the parameter code: parameter value can only be changed after the drive has been stopped.

Monitoring Values (Control Keypad: Menu M1)

The monitoring values are the actual values of parameters and signals as well as statuses and measurements. Monitoring values cannot be edited. See **Page 5-7** for more information.

Table 7-1: Monitoring Values

Code	Parameter	Unit	ID	Description
V1.1	Output frequency	Hz	1	Frequency to the motor
V1.2	Frequency reference	Hz	25	
V1.3	Motor speed	rpm	2	Calculated motor speed
V1.4	Motor current	A	3	Measured motor current
V1.5	Motor torque	%	4	Calculated actual torque/nominal torque of the unit
V1.6	Motor power	%	5	Calculated actual power/nominal power of the unit
V1.7	Motor voltage	V	6	Calculated motor voltage
V1.8	DC-link voltage	V	7	Measured DC-link voltage
V1.9	Unit temperature	°C	8	Heatsink temperature
V1.10	Analog input 1	V	13	AI1
V1.11	Analog input 2		14	AI2
V1.12	Analog output current		26	AO1
V1.13	Analog output current 1, expander board	mA	31	
V1.14	Analog output current 2, expander board	mA	32	
V1.15	DIN1, DIN2, DIN3		15	Digital input statuses
V1.16	DIE1, DIE2, DIE3		33	I/O expander board: Digital input statuses
V1.17	RO1		34	Relay output 1 status
V1.18	ROE1, ROE2, ROE3		35	I/O exp. board: Relay output statuses
V1.19	DOE1		36	I/O exp. board: Digital output 1 status
V1.20	PID Reference	%	20	In percent of the maximum frequency
V1.21	PID Actual value	%	21	In percent of the maximum actual value
V1.22	PID Error value	%	22	In percent of the maximum error value
V1.23	PID Output	%	23	In percent of the maximum output value
V1.24	Autochange outputs 1, 2, 3		30	Used only in pump and fan control
V1.25	Mode		66	Shows the current drive configuration mode selected with start-up wizard: **0** = No mode selected (Default) **1** = Standard **2** = Fan **3** = Pump **4** = High performance

Parameter List

Table 7-2: Basic Parameters (Control Keypad: Menu P2 → B2.1)

Code	Parameter	Min.	Max.	Unit	Default	Cust.	ID	Note
P2.1.1	Min. frequency	0.00	Par. 2.1.2	Hz	0.00		101	
P2.1.2	Max. frequency	Par. 2.1.1	320.00	Hz	50.00		102	**NOTE:** If f_{max} > than the motor synchronous speed, check suitability for motor and drive system
P2.1.3	Acceleration time 1	0.1	3000.0	s	1.0		103	
P2.1.4	Deceleration time 1	0.1	3000.0	s	1.0		104	
P2.1.5	Current limit	0.1 x I_L	1.5 x I_L	A	I_L		107	**NOTE:** Formulas apply approximately for drives up to MF3. For greater sizes, consult the factory.
P2.1.6	Nominal voltage of the motor	180	690	V	240V:230V 480V:400V		110	
P2.1.7	Nominal frequency of the motor	30.00	320.00	Hz	50.00		111	Check the rating plate of the motor
P2.1.8	Nominal speed of the motor	300	20 000	rpm	1440		112	The default applies for a 4-pole motor and a nominal size drive.
P2.1.9	Nominal current of the motor	0.3 x I_L	1.5 x I_L	A	I_L		113	Check the rating plate of the motor
P2.1.10	Motor cosφ	0.30	1.00		0.85		120	Check the rating plate of the motor
P2.1.11	Start function	0	1		0		505	**0** = Ramp **1** = Flying start
P2.1.12	Stop function	0	1		0		506	**0** = Coasting **1** = Ramp
P2.1.13	V/f optimization	0	1		0		109	**0** = Not used **1** = Automatic torque boost
P2.1.14	I/O reference	0	4		0		117	**0** = AI1 **1** = AI2 **2** = Keypad reference **3** = Fieldbus reference (FBSpeedReference) **4** = Motor potentiometer
P2.1.15	AI2 signal range	1	2		2		390	Not used if AI2 Custom min >0% or AI2 custom max. <100% **1** = 0 – 20 mA **2** = 4 – 20 mA **3** = 0 – 10V **4** = 2 – 10V

Table 7-2: Basic Parameters (Control Keypad: Menu P2 → B2.1) (Continued)

Code	Parameter	Min.	Max.	Unit	Default	Cust.	ID	Note
P2.1.16	Analog output function	0	12		1		307	**0** = Not used **1** = Output freq. (0 – f_{max}) **2** = Freq. reference (0 – f_{max}) **3** = Motor speed (0 – Motor nominal speed) **4** = Output current (0 – I_{nMotor}) **5** = Motor torque (0 – T_{nMotor}) **6** = Motor power (0 – P_{nMotor}) **7** = Motor voltage (0 – U_{nMotor}) **8** = DC-link volt (0 – U_{nMotor}) **9** = PI controller ref. value **10** = PI contr. act. value 1 **11** = PI contr. error value **12** = PI controller output
P2.1.17 ①	DIN2 function	0	10		1		319	**0** = Not used **1** = Start Reverse **2** = Reverse **3** = Stop pulse **4** = External fault, cc **5** = External fault, oc **6** = Run enable **7** = Preset speed 2 **8** = Motor pot. UP (cc) **9** = Disable PID (Direct freq. reference) **10** = Interlock 1
P2.1.18 ①	DIN3 function	0	16		6		301	**0** = Not used **1** = Reverse **2** = External fault, cc **3** = External fault, oc **4** = Fault reset **5** = Run enable **6** = Preset speed 1 **7** = Preset speed 2 **8** = DC-braking command **9** = Motor pot. UP (cc) **10** = Motor pot. DOWN (cc) **11** = Disable PID (PID control selection) **12** = PID Keypad ref. 2 selection **13** = Interlock 2 **14** = Thermistor input (See **Page 4-9**) **15** = Force CP to I/O **16** = Force CP to Fieldbus
P2.1.19	Preset speed 1	0.00	Par. 2.1.2	Hz	10.00		105	
P2.1.20	Preset speed 2	0.00	Par. 2.1.2	Hz	50.00		106	
P2.1.21	Automatic restart	0	1		0		731	**0** = Not used **1** = Used
P2.1.22	Parameter conceal	0	1		1		115	**0** = All parameters and menus visible **1** = Only group P2.1 and menus M1 – H5 visible

January 2009

Chapter 8 — Multi-Control Application

Introduction

The Multi-Control Application of the Cutler-Hammer® SLX9000 drive by Eaton's electrical business uses direct frequency reference from the analog input 1 as a default. However, a PID controller can be used (for example, in pump and fan applications), which offers versatile internal measuring and adjusting functions.

The direct frequency reference can be used for the control without the PID controller and it can be selected from the analog inputs, fieldbus, keypad, preset speeds or motor potentiometer.

Special parameters for Pump and Fan Control (Group P2.10) can be browsed and edited after changing the value of par 2.9.1 to 2 (Pump and fan control activated).

The PID controller reference can be selected from the analog inputs, fieldbus, PID keypad reference 1 or by enabling the PID keypad reference 2 via digital input. The PID controller actual value can be selected from the analog inputs, fieldbus or the actual values of the motor. PID controller can also be used when the drive is controlled via fieldbus or the control keypad.

- Digital inputs DIN2, DIN3, (DIN4) and optional digital inputs DIE1, DIE2, DIE3 are freely programmable.
- Internal and optional digital/relay and analog outputs are freely programmable.
- Analog input 1 can be programmed as current input, voltage input or digital input DIN4.

Note: If the analog input 1 has been programmed as DIN4 with parameter 2.2.6 (AI1 Signal Range), check that the jumper selections (**Figure 9-1**) are correct.

Additional functions:

- The PID controller can be used from control places I/O, keypad and fieldbus
- Identification
- Programming wizard
- Sleep function
- Actual value supervision function: fully programmable; off, warning, fault
- Programmable Start/Stop and Reverse signal logic
- Reference scaling
- 2 Preset speeds
- Analog input range selection, signal scaling, inversion and filtering
- Frequency limit supervision
- Programmable start and stop functions
- DC-brake at start and stop
- Prohibit frequency area
- Programmable VHz curve and VHz optimization

- Adjustable switching frequency
- Autorestart function after fault
- Protections and supervisions (all fully programmable; off, warning, fault):
  - Current input fault
  - External fault
  - Output phase
  - Undervoltage
  - Ground fault
  - Motor thermal, stall and underload protection
  - Thermistor
  - Fieldbus communication
  - Option board

Control Input/Output

Table 8-1: Multi-Control Application Default Input/Output Configuration, MF4 – MF6 460V

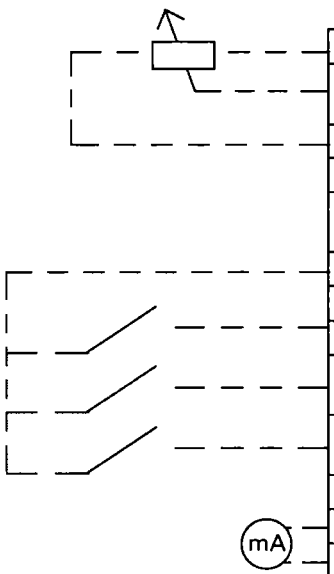

Terminal		Signal	Description
1	$+10V_{ref}$	Reference output	Voltage for potentiometer, etc.
2	AI1+	Analog input, voltage range 0 – 10V DC	Voltage input frequency reference Can be programmed as DIN4
3	AI1-	I/O Ground	Ground for reference and controls
4	AI2+	Analog input, voltage range 0 – 10V DC, or current range 0/4 – 20 mA	Current input frequency reference
5	AI2- /GND		
6	+24V	Control voltage output	Voltage for switches, etc. max 0.1A
7	GND	I/O ground	Ground for reference and controls
8	DIN1	Start forward	Contact closed = start forward
9	DIN2	Start reverse (programmable)	Contact closed = start reverse
10	DIN3	Multi-step speed selection 1 (programmable)	Contact closed = multi-step speed
11	GND	I/O ground	Ground for reference and controls
18	AO1+	Output frequency Analog output	Programmable Range 0 – 20 mA, R_L max. 500Ω
19	AO1-		
A	RS 485	Serial bus	Differential receiver/transmitter
B	RS 485	Serial bus	Differential receiver/transmitter
30	+24V	24V aux. input voltage	Control power supply backup
21	RO1	Relay output 1 FAULT	Programmable
22	RO1		
23	RO1		

Table 8-2: AI1 Configuration, When Programmed as DIN4

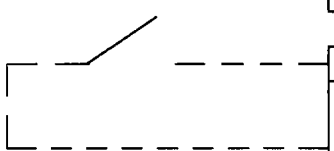

Terminal		Signal	Description
1	$+10V_{ref}$	Reference output	Voltage for potentiometer, etc.
2	AI1+ or DIN 4	Analog input, voltage range 0 – 10V DC	Voltage/current input frequency reference Can be programmed as DIN4
3	AI1-	I/O Ground	Ground for reference and controls
4	AI2+	Analog input, current range 0 – 20 mA	Current input frequency reference
5	AI2- /GND		
6	+24V	Control voltage output	
7	GND	I/O ground	Ground for reference and controls

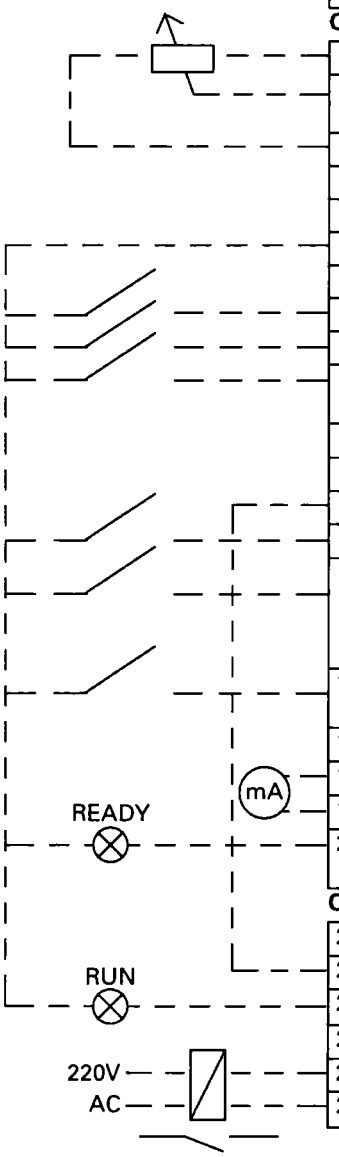

Table 8-3: Default I/O Configuration, All 230V, FR7 – FR8 460V and All 575V

Terminal		Signal	Description		
OPTA1					
1	+10V$_{ref}$	Reference output	Voltage for potentiometer, etc.		
2	AI1+	Analog input, voltage range 0 – 10V DC	Voltage input frequency reference		
3	AI1-	I/O Ground	Ground for reference and controls		
4	AI2+	Analog input, current range 0 – 20 mA	Current input frequency reference		
5	AI2-				
6	+24V	Control voltage output	Voltage for switches. etc. max 0.1A		
7	GND	I/O ground	Ground for reference and controls		
8	DIN1	Start forward	Contact closed = start forward		
9	DIN2	Start reverse	Contact closed = start reverse		
10	DIN3	External fault input (programmable)	Contact open = no fault Contact closed = fault		
11	CMA	Common for DIN1 – DIN3	Connect to GND or +24V		
12	+24V	Control voltage output	Voltage for switches (see #6)		
13	GND	I/O ground	Ground for reference and controls		
14	DIN4	Multi-step speed select 1	DIN4	DIN5	Frequency ref.
15	DIN5	Multi-step speed select 2	Open Closed Open Closed	Open Open Closed Closed	Ref.U$_{in}$ Multi-step ref.1 Multi-step ref.2 RefMax
16	DIN6	Fault reset	Contact open = no action Contact closed = fault reset		
17	CMB	Common for DIN4 – DIN6	Connect to GND or +24V		
18	AO1+	Output frequency Analog output	Programmable Range 0 – 20 mA/R$_L$, max. 500Ω		
19	AO1-				
20	DO1	Digital output READY	Programmable Open collector, I ≤ 50 mA, U ≤ 48V DC		
OPTA2					
21	RO1	Relay output 1 RUN			
22	RO1				
23	RO1				
24	RO2	Relay output 2 FAULT			
25	RO2				
26	RO2				

Parameter Lists

On the next pages you will find the lists of parameters within the respective parameter groups. The parameter descriptions are given in **Chapter 9**.

Column explanations:

Code	=	Location indication on the keypad; Shows the operator the present parameter number
Parameter	=	Name of parameter
Min.	=	Minimum value of parameter
Max.	=	Maximum value of parameter
Unit	=	Unit of parameter value; Given if available
Default	=	Value preset by factory
Cust	=	Customer's own setting
ID	=	ID number of the parameter (used with PC tools)
(1)	=	On the parameter code: parameter value can only be changed after the drive has been stopped.

Monitoring Values (Control Keypad: Menu M1)

The monitoring values are the actual values of parameters and signals as well as statuses and measurements. Monitoring values cannot be edited. See **Page 5-7** for more information.

Table 8-4: Monitoring Values

Code	Parameter	Unit	ID	Description
V1.1	Output frequency	Hz	1	Frequency to the motor
V1.2	Frequency reference	Hz	25	
V1.3	Motor speed	rpm	2	Calculated motor speed
V1.4	Motor current	A	3	Measured motor current
V1.5	Motor torque	%	4	Calculated actua0l torque/nom. torque of the motor
V1.6	Motor power	%	5	Calculated actual power/nom. power of the motor
V1.7	Motor voltage	V	6	Calculated motor voltage
V1.8	DC-link voltage	V	7	Measured DC-link voltage
V1.9	Unit temperature	°C	8	Heat sink temperature
V1.10	Analog input 1		13	AI1
V1.11	Analog input 2		14	AI2
V1.12	Analog output current	mA	26	AO1
V1.13	Analog output current 1, expander board	mA	31	
V1.14	Analog output current 2, expander board	mA	32	
V1.15	DIN1, DIN2, DIN3		15	Digital input statuses
V1.16	DIE1, DIE2, DIE3		33	I/O expander board: Digital input statuses
V1.17	RO1		34	Relay output 1 status
V1.18	ROE1, ROE2, ROE3		35	I/O exp. board: Relay output statuses
V1.19	DOE1		36	I/O exp. board: Digital output 1 status
V1.20	PID Reference	%	20	In percent of the maximum process reference
V1.21	PID Actual value	%	21	In percent of the maximum actual value
V1.22	PID Error value	%	22	In percent of the maximum error value
V1.23	PID Output	%	23	In percent of the maximum output value
V1.24	Autochange outputs 1, 2, 3		30	Used only in pump and fan control
V1.25	Mode		66	Shows current operation mode selected with start-up wizard: **0** = Not selected **1** = Standard **2** = Fan **3** = Pump **4** = High Performance

Basic Parameters (Control Keypad: Menu P2 → P2.1)

Table 8-5: Basic Parameters P2.1

Code	Parameter	Min.	Max.	Unit	Default	Cust	ID	Note
P2.1.1	Min frequency	0.00	Par. 2.1.2	Hz	0.00		101	
P2.1.2	Max frequency	Par. 2.1.1	320.00	Hz	50.00		102	**NOTE:** If f_{max} > than the motor synchronous speed, check suitability for motor and drive system
P2.1.3	Acceleration time 1	0.1	3000.0	s	1.0		103	
P2.1.4	Deceleration time 1	0.1	3000.0	s	1.0		104	
P2.1.5	Current limit	0.1 x I_L	1.5 x I_L	A	I_L		107	**NOTE:** Consult the factory.
P2.1.6 ①	Nominal voltage of the motor	180	690	V	400V		110	
P2.1.7 ①	Nominal frequency of the motor	30.00	320.00	Hz	50.00		111	Check the rating plate of the motor
P2.1.8 ①	Nominal speed of the motor	300	20 000	rpm	1440		112	The default applies for a 4-pole motor and a nominal size drive.
P2.1.9 ①	Nominal current of the motor	0.3 x I_L	1.5 x I_L	A	I_L		113	Check the rating plate of the motor
P2.1.10 ①	Power factor	0.30	1.00		0.85		120	Check the rating plate of the motor
P2.1.11 ①	Start function	0	1		0		505	**0** = Ramp **1** = Flying start
P2.1.12	Stop function	0	1		0		506	**0** = Coasting **1** = Ramp
P2.1.13	VHz optimization	0	1		0		109	**0** = Not used **1** = Automatic torque boost
P2.1.14	I/O reference	0	5		0		117	**0** = AI1 **1** = AI2 **2** = Keypad reference **3** = Fieldbus reference (FBSpeedReference) **4** = Motor potentiometer **5** = AI1/AI2 selection
P2.1.15	AI2 signal range	1	4		2		390	Not used if AI2 Custom min <> 0% or AI2 custom max. <> 100% **1** = 0 – 20 mA **2** = 4 – 20 mA **3** = 0V – 10V **4** = 2V – 10V

Table 8-5: Basic Parameters P2.1, continued

Code	Parameter	Min.	Max.	Unit	Default	Cust	ID	Note
P2.1.16	Analog output function	0	12		1		307	**0** = Not used **1** = Output freq. (0 – f_{max}) **2** = Freq. reference (0 – f_{max}) **3** = Motor speed (0 – Motor nominal speed) **4** = Output current (0 – I_{nMotor}) **5** = Motor torque (0 – T_{nMotor}) **6** = Motor power (0 – P_{nMotor}) **7** = Mot. voltage (0 – V_{nMotor}) **8** = DC-link volt (0 – 1000V) **9** = PI controller ref. value **10** = PI contr. act. value 1 **11** = PI contr. error value **12** = PI controller output
P2.1.17 ⓘ	DIN2 function	0	10		1		319	**0** = Not used **1** = Start Reverse (DIN1 = Start forward) **2** = Reverse (DIN1 = Start) **3** = Stop pulse (DIN1 = Start pulse) **4** = External fault, cc **5** = External fault, oc **6** = Run enable **7** = Preset speed 2 **8** = Motor pot. UP (cc) **9** = Disable PID (Direct freq. reference) **10** = Interlock 1
P2.1.18 ⓘ	DIN3 function	0	17		6		301	**0** = Not used **1** = Reverse **2** = External fault, cc **3** = External fault, oc **4** = Fault reset **5** = Run enable **6** = Preset speed 1 **7** = Preset speed 2 **8** = DC-braking command **9** = Motor pot. UP (cc) **10** = Motor pot. DOWN (cc) **11** = Disable PID (Direct freq. reference) **12** = PID Keypad ref. 2 selection **13** = Interlock 2 **14** = Thermistor input Note! See **Page 4-9** **15** = Force control place to I/O **16** = Force control place to Fieldbus **17** = AI1/AI2 selection for I/O reference

Table 8-5: Basic Parameters P2.1, continued

Code	Parameter	Min.	Max.	Unit	Default	Cust	ID	Note
P2.1.19	Preset speed 1	0.00	Par. 2.1.2	Hz	10.00		105	
P2.1.20	Preset speed 2	0.00	Par. 2.1.2	Hz	50.00		106	
P2.1.21	Automatic restart	0	1		0		731	**0** = Not used **1** = Used
P2.1.22	Parameter conceal	0	1		0		115	**0** = All parameters and menus visible **1** = Only group P2.1 and menus M1 to H5 visible

Input Signals (Control Keypad: Menu P2 → P2.2)

Table 8-6: Input Signals, P2.2

Code	Parameter	Min.	Max.	Unit	Default	Cust	ID	Note
P2.2.1 ①	Expander board DIE1 function	0	13		7		368	**0** = Not used **1** = Reverse **2** = External fault, cc **3** = External fault, oc **4** = Fault reset **5** = Run enable **6** = Preset speed 1 **7** = Preset speed 2 **8** = DC-braking command **9** = Motor pot. UP (cc) **10** = Motor pot. DOWN (cc) **11** = Disable PID (PID control selection) **12** = PID Keypad ref. 2 selection **13** = Interlock 1
P2.2.2 ①	Expander board DIE2 function	0	13		4		330	Same as parameter 2.2.1, except: **13** = Interlock 2
P2.2.3 ①	Expander board DIE3 function	0	13		11		369	Same as parameter 2.2.1, except: **13** = Interlock 3
P2.2.4	DIN4 function (AI1)	0	13		2		499	Used if P2.2.6 = 0 Selections same as in parameter 2.2.3
P2.2.5	AI1 signal selection	0			10		377	**10** = AI1 (**1** = Local, **0** = input 1) **11** = AI2 (**1** = Local, **1** = input 2) **20** = Exp. AI1 (**2** = exp. board, **0** = input 1) **21** = Exp AI2 (**2** = exp. board, **1** = input 2)
P2.2.6	AI1 signal range	1	4		3		379	**0** = Digital input 4 **1** = 0 – 20 mA **2** = 4 – 20 mA **3** = 0 – 10V **4** = 2 – 10V Not used if AI2 Custom min > 0% or AI2 custom max. < 100% **Note!** See **Page 5-22**

Table 8-6: Input Signals, P2.2, continued

Code	Parameter	Min.	Max.	Unit	Default	Cust	ID	Note
P2.2.7	AI1 custom minimum setting	0.00	100.00	%	0.00		380	
P2.2.8	AI1 custom maximum setting	0.00	100.00	%	100.00		381	
P2.2.9	AI1 inversion	0	1		0		387	**0** = Not inverted **1** = Inverted
P2.2.10	AI1 filter time	0.00	10.00	s	0.10		378	**0** = No filtering
P2.2.11	AI2 signal selection	0			11		388	Same as parameter 2.2.5
P2.2.12	AI2 signal range	1	4		2		390	Not used if AI2 Custom min <> 0% or AI2 custom max. <> 100% **1** = 0 – 20 mA **2** = 4 – 20 mA **3** = 0V – 10V **4** = 2V – 10V
P2.2.13	AI2 custom minimum setting	0.00	100.00	%	0.00		391	
P2.2.14	AI2 custom maximum setting	0.00	100.00	%	100.00		392	
P2.2.15	AI2 inversion	0	1		0		398	**0** = Not inverted **1** = Inverted
P2.2.16	AI2 filter time	0.00	10.00	s	0.10		389	**0** = No filtering
P2.2.17	Motor potentiometer frequency reference memory reset	0	2		1		367	**0** = No reset **1** = Reset if stopped or powered down **2** = Reset if powered down
P2.2.18	Reference scaling minimum value	0.00	P2.2.19		0.00		344	Does not affect the fieldbus reference (Scaled between par. 2.1.1 and par. 2.1.2)
P2.2.19	Reference scaling maximum value	P2.2.18	320.00		0.00		345	Does not affect the fieldbus reference (Scaled between par. 2.1.1 and par. 2.1.2)
P2.2.20	Keypad control reference selection	0	5		2		121	**0** = AI1 **1** = AI2 **2** = Keypad reference **3** = Fieldbus reference (FBSpeedreference) **4** = Motor potentiometer **5** = PID controller
P2.2.21	Fieldbus control reference selection	0	5		3		122	See above

Output Signals (Control Keypad: Menu P2 → P2.3)

Table 8-7: Output Signals, G2.3

Code	Parameter	Min.	Max.	Unit	Default	Cust	ID	Note
P2.3.1	Relay output 1 function	0	20		3		313	**0** = Not used **1** = Ready **2** = Run **3** = Fault **4** = Fault inverted **5** = FC overheat warning **6** = Ext. fault or warning **7** = Ref. fault or warning **8** = Warning **9** = Reversed **10** = Preset speed **11** = At speed **12** = Mot. regulator active **13** = OP freq. limit superv.1 **14** = Control place: IO **15** = Thermistor fault/ warning **16** = Actual value supervision **17** = Autochange 1 control **18** = Autochange 2 control **19** = Autochange 3 control **20** = AI supervision
P2.3.2	Expander board relay output 1 function	0	19		2		314	Same as parameter 2.3.1
P2.3.3	Expander board relay output 2 function	0	19		3		317	Same as parameter 2.3.1
P2.3.4	Expander board digital output 1 function	0	19		1		312	Same as parameter 2.3.1
P2.3.5	Analog output function	0	12		1		307	See parameter 2.1.16
P2.3.6	Analog output filter time	0.00	10.00	s	1.00		308	**0** = No filtering
P2.3.7	Analog output inversion	0	1		0		309	**0** = Not inverted **1** = Inverted
P2.3.8	Analog output minimum	0	1		0		310	**0** = 0 mA **1** = 4 mA
P2.3.9	Analog output scale	10	1000	%	100		311	
P2.3.10	Expander board analog output 1 function	0	12		0		472	Same as parameter 2.1.16
P2.3.11	Expander board analog output 2 function	0	12		0		479	Same as parameter 2.1.16
P2.3.12	Output frequency limit 1 supervision	0	2		0		315	**0** = No limit **1** = Low limit supervision **2** = High limit supervision
P2.3.13	Output frequency limit 1; Supervised value	0.00	Par. 2.1.2	Hz	0.00		316	

Table 8-7: Output Signals, G2.3, continued

Code	Parameter	Min.	Max.	Unit	Default	Cust	ID	Note
P2.3.14	Analog input supervision	0	2		0		356	**0** = Not used **1** = AI1 **2** = AI2
P2.3.15	AI supervision OFF limit	0.00	100.00	%	10.00		357	
P2.3.16	AI supervision ON limit	0.00	100.00	%	90.00		358	
P2.3.17	Relay output 1 ON delay	0.00	320.00	s	0.00		487	ON delay for RO1
P2.3.18	Relay output 1 OFF delay	0.00	320.00	s	0.00		488	OFF delay for RO1

Drive Control Parameters (Control Keypad: Menu P2 → P2.4)

Table 8-8: Drive Control Parameters, P2.4

Code	Parameter	Min.	Max.	Unit	Default	Cust	ID	Note
P2.4.1	Ramp 1 shape	0.0	10.0	s	0.0		500	**0** = Linear **>0** = S-curve ramp time
P2.4.2 ①	Brake chopper	0	3		0		504	**0** = Disabled **1** = Used in Run state **3** = Used in Run and Stop state
P2.4.3	DC braking current	0.15 x I_n	1.5 x I_n	A	Varies		507	
P2.4.4	DC braking time at stop	0.00	600.00	s	0.00		508	**0** = DC brake is off at stop
P2.4.5	Frequency to start DC braking during ramp stop	0.10	10.00	Hz	1.50		515	
P2.4.6	DC braking time at start	0.00	600.00	s	0.00		516	**0** = DC brake is off at start
P2.4.7	Flux brake	0	1		0		520	**0** = Off **1** = On
P2.4.8	Flux braking current	0.0	Varies	A	0.0		519	

Prohibit Frequency Parameters (Control Keypad: Menu P2 → P2.5)

Table 8-9: Prohibit Frequency Parameters, P2.5

Code	Parameter	Min.	Max.	Unit	Default	Cust	ID	Note
P2.5.1	Prohibit frequency range 1 low limit	0.0	Par. 2.5.2	Hz	0.0		509	**0** = Not used
P2.5.2	Prohibit frequency range 1 high limit	0.0	Par. 2.1.2	Hz	0.0		510	**0** = Not used
P2.5.3	Prohibit frequencies acc./ dec. ramp scaling	0.1	10.0	times	1.0		518	Multiplier of the currently selected ramp time between prohibit frequency limits

Motor Control Parameters (Control Keypad: Menu P2→ P2.6)

Table 8-10: Motor Control Parameters, P2.6

Code	Parameter	Min.	Max.	Unit	Default	Cust	ID	Note
P2.6.1 ①	Motor control mode	0	1		0		600	**0** = Frequency control **1** = Speed control
P2.6.2 ①	VHz ratio selection	0	3		0		108	**0** = Linear **1** = Squared **2** = Programmable **3** = Linear with flux optim.
P2.6.3 ①	Field weakening point	30.00	320.00	Hz	50.00		602	
P2.6.4 ①	Voltage at field weakening point	10.00	200.00	%	100.00		603	n% x U_{nmot}
P2.6.5 ①	VHz curve midpoint frequency	0.00	par. P2.6.3	Hz	50.00		604	
P2.6.6 ①	VHz curve midpoint voltage	0.00	100.00	%	100.00		605	n% x U_{nmot} Parameter max. value = par. 2.6.4
P2.6.7 ①	Output voltage at zero frequency	0.00	40.00	%	0.00		606	n% x U_{nmot}
P2.6.8	Switching frequency	1.0	16.0	kHz	6.0		601	Depends on hp
P2.6.9	Overvoltage controller	0	1		1		607	**0** = Not used **1** = Used
P2.6.10	Undervoltage controller	0	1		1		608	**0** = Not used **1** = Used
P2.6.11	Identification	0	1		0		631	**0** = No action **1** = ID no run

Protections (Control Keypad: Menu P2→ P2.7)

Table 8-11: Protections, P2.7

Code	Parameter	Min.	Max.	Unit	Default	Cust	ID	Note
P2.7.1	Response to 4 mA reference fault	0	3		0		700	**0** = No response **1** = Warning **2** = Fault, stop acc. to 2.1.12 **3** = Fault, stop by coasting
P2.7.2	Response to external fault	0	3		2		701	**0** = No response **1** = Warning **2** = Fault, stop acc. to 2.1.12 **3** = Fault, stop by coasting
P2.7.3	Response to undervoltage fault	1	3		2		727	
P2.7.4	Output phase supervision	0	3		2		702	
P2.7.5	Ground fault protection	0	3		2		703	
P2.7.6	Thermal protection of the motor	0	3		2		704	
P2.7.7	Motor ambient temperature factor	-100.0	100.0	%	0.0		705	

Table 8-11: Protections, P2.7, continued

Code	Parameter	Min.	Max.	Unit	Default	Cust	ID	Note
P2.7.8	Motor cooling factor at zero speed	0.0	150.0	%	40.0		706	
P2.7.9	Motor thermal time constant	1	200	min	45		707	
P2.7.10	Motor duty cycle	0	100	%	100		708	
P2.7.11	Stall protection	0	3		1		709	Same as parameter 2.7.1
P2.7.12	Stall current limit	0.1	I_{nmotor} x 2	A	I_{nmotor} x 1.3		710	
P2.7.13	Stall time limit	1.00	120.00	s	15.00		711	
P2.7.14	Stall frequency limit	1.0	P2.1.2	Hz	25.0		712	
P2.7.15	Underload protection	0	3		0		713	Same as parameter 2.7.1
P2.7.16	Underload curve at nominal frequency	10.0	150.0	%	50.0		714	
P2.7.17	Underload curve at zero frequency	5.0	150.0	%	10.0		715	
P2.7.18	Underload protection time limit	2.00	600.00	s	20.00		716	
P2.7.19	Response to thermistor fault	0	3		2		732	Same as parameter 2.7.1
P2.7.20	Response to fieldbus fault	0	3		2		733	Same as parameter 2.7.1
P2.7.21	Response to slot fault	0	3		2		734	Same as parameter 2.7.1
P2.7.22	Actual value supervision	0	4		0		735	**0** = No response **1** = Warning if below limit **2** = Warning if above limit **3** = Fault, if below limit **4** = Fault, if above limit
P2.7.23	Actual value supervision limit	0.0	100.0	%	10.0		736	
P2.7.24	Actual value supervision delay	0	3600	s	5		737	

Autorestart Parameters (Control Keypad: Menu P2→ P2.8)

Table 8-12: Autorestart Parameters, P2.8

Code	Parameter	Min.	Max.	Unit	Default	Cust	ID	Note
P2.8.1	Wait time	0.10	10.00	s	0.50		717	
P2.8.2	Trial time	0.00	60.00	s	30.00		718	
P2.8.3	Start function	0	2		0		719	**0** = Ramp **1** = Flying start **2** = According to par. 2.4.6

PID Reference Parameters (Control Keypad: Menu P2 → P2.9)

Table 8-13: PID Reference Parameters, P2.9

Code	Parameter	Min.	Max.	Unit	Default	Cust	ID	Note
P2.9.1	PID activation	0	1		0		163	**0** = Not used **1** = PID controller activated **2** = Pump & fan control active, group P2.10 visible
P2.9.2	PID reference	0	3		2		332	**0** = AI1 **1** = AI2 **2** = Ref. from keypad (PID Ref 1) **3** = Fieldbus reference (ProcessDataIN1)
P2.9.3	Actual value input	0	6		1		334	**0** = AI1 signal **1** = AI2 signal **2** = Fieldbus (ProcessDataIN2) **3** = Motor torque **4** = Motor speed **5** = Motor current **6** = Motor power
P2.9.4	PID controller gain	0.0	1000.0	%	100.0		118	
P2.9.5	PID controller I-time	0.00	320.00	s	10.00		119	
P2.9.6	PID controller D-time	0.00	10.00	s	0.00		132	
P2.9.7	Actual value 1 minimum scale	-1000.0	1000.0	%	0.00		336	0 = No minimum scaling
P2.9.8	Actual value 1 maximum scale	-1000.0	1000.0	%	100.0		337	100 = No maximum scaling
P2.9.9	Error value inversion	0	1		0		340	
P2.9.10	Sleep frequency	Par. 2.1.1	Par. 2.1.2	Hz	10.00		1016	
P2.9.11	Sleep delay	0	3600	s	30		1017	
P2.9.12	Wake up level	0.00	100.00	%	25.00		1018	
P2.9.13	Wake up function	0	3		0		1019	**0** = Wake-up at fall below wake-up level (2.9.12) **1** = Wake-up at exceeded wake-up level (2.9.12) **2** = Wake-up at fall below wake-up level (PID ref) **3** = Wake-up at exceeded wake-up level (PID ref)

Pump and Fan Control Parameters (Control Keypad: Menu P2 → P2.10)

Note: Group P2.10 is visible only if the value of par 2.9.1 is set to **2**.

Table 8-14: Pump and Fan Control Parameters, P2.10

Code	Parameter	Min.	Max.	Unit	Default	Cust	ID	Note
P2.10.1	Number of auxiliary drives	0	3		1		1001	
P2.10.2	Start delay, auxiliary drives	0.0	300.0	s	4.0		1010	
P2.10.3	Stop delay, auxiliary drives	0.0	300.0	s	2.0		1011	
P2.10.4	Autochange	0	4		0		1027	**0** = Not used **1** = Autochange with aux pumps **2** = Autochange with drive & aux pumps **3** = Autochange and interlocks (aux pumps) **4** = Autochange and interlocks (drive & aux pumps)
P2.10.5	Autochange interval	0.0	3000.0	h	48.0		1029	0.0 = TEST = 40 s Elapsed time for autochange
P2.10.6	Autochange; Maximum number of auxiliary drives	0	3		1		1030	Autochange level for auxiliary drives
P2.10.7	Autochange frequency limit	0.00	par. 2.1.2	Hz	25.00		1031	Autochange frequency level for variable speed drive
P2.10.8	Start frequency, auxiliary drive 1	Par. 2.10.9	320.00	Hz	51.00		1002	
P2.10.9	Stop frequency, auxiliary drive 1	Par. 2.1.1	Par. 2.10.8	Hz	10.00		1003	

Keypad Control (Control Keypad: Menu K3)

The parameters for the selection of control place and direction on the keypad are listed in **Table 8-15.** See the Keypad Control Menu on **Page 5-10.**

Table 8-15: Keypad Control Parameters, K3

Code	Parameter	Min.	Max.	Unit	Default	Cust	ID	Note
P3.1	Control place	1	3		1		125	**1** = I/O terminal **2** = Keypad **3** = Fieldbus
R3.2	Keypad reference	Par. 2.1.1	Par. 2.1.2	Hz				
P3.3	Direction (on keypad)	0	1		0		123	**0** = Forward **1** = Reverse
R3.4	Stop button	0	1		1		114	**0** = Limited function of Stop button **1** = Stop button always enabled
R3.5	PID reference	0.00	100.00	%	0.00			
R3.6	PID reference 2	0.00	100.00	%	0.00			Selected with digital inputs

System Menu (Control Keypad: Menu S6)

For parameters and functions related to the general use of the drive, such as customized parameter sets or information about the hardware and software, see **Page 5-13.**

Expander Boards (Control Keypad: Menu E7)

The E7 menu shows the expander boards attached to the control board and board-related information. For more information, see **Page 5-26.**

Chapter 9 — Description of Parameters

Basic Parameters

2.1.1 Minimum frequency ID101
2.1.2 Maximum frequency ID102

Defines the frequency limits of the drive. The maximum value for parameters 2.1.1 and 2.1.2 is 320 Hz.

The software will automatically check the values of parameters 2.1.19, 2.1.20, 2.3.13, 2.5.1, 2.5.5 and 2.6.5.

2.1.3 Acceleration time 1 ID103
2.1.4 Deceleration time 1 ID104

These limits correspond to the time required for the output frequency to accelerate from the zero frequency to the set maximum frequency (par. 2.1.2).

2.1.5 Current limit ID107

This parameter determines the maximum motor current from the drive. To avoid motor overload, set this parameter according to the rated current of the motor. The current limit is equal to the rated converter current (I_L) by default.

2.1.6 Nominal voltage of the motor ID110

Find this value V_n on the motor nameplate. This parameter sets the voltage at the field weakening point (parameter 2.6.4) to 100% x U_{nmotor}.

2.1.7 Nominal frequency of the motor ID111

Find this value f_n on the motor nameplate. This parameter sets the field weakening point (parameter 2.6.3) to the same value.

2.1.8 Nominal speed of the motor ID112

Find this value n_n on the motor nameplate.

2.1.9 Nominal current of the motor ID113

Find this value I_n on the motor nameplate.

2.1.10 Power Factor ID120

Find this value on the motor nameplate.

2.1.11 Start function ID505

Ramp:

0 The drive starts from 0 Hz and accelerates to maximum frequency within the set acceleration time. (Load inertia or starting friction may cause prolonged acceleration times).

Flying start:

1 The drive is able to start into a running motor by applying a small torque to motor and searching for the frequency corresponding to the speed the motor is running at. Searching starts from the maximum frequency towards the actual frequency until the correct value is detected. Thereafter, the output frequency will be increased/decreased to the set reference value according to the set acceleration/deceleration parameters.

Use this mode if the motor is coasting when the start command is given. With the flying start, it is possible to ride through short utility voltage interruptions.

2.1.12 Stop function ID506

Coasting:

0 The motor coasts to a halt without control from the drive after the Stop command.

Ramp:

1 After the Stop command, the speed of the motor is decelerated according to the set deceleration parameters.

If the regenerated energy is high it may be necessary to use an external braking resistor for faster deceleration.

2.1.13 V/Hz optimization ID109

0 Not used

1 Automatic torque boost

The voltage to the motor changes automatically which makes the motor produce sufficient torque to start and run at low frequencies. The voltage increase depends on the motor type and power. Automatic torque boost can be used in applications where starting torque due to starting friction is high, e.g. in conveyors.

Note: In high torque — low speed applications — it is likely that the motor will overheat. If the motor has to run a prolonged time under these conditions, special attention must be paid to cooling the motor. Use external cooling for the motor if the temperature tends to rise too high.

2.1.14 I/O Reference selection ID117

Defines the selected frequency reference source when the drive is controlled from the I/O terminal.

0	AI1 reference (terminals 2 and 3, e.g. potentiometer)
1	AI2 reference (terminals 5 and 6, e.g. transducer)
2	Keypad reference (parameter R3.2)
3	Reference from Fieldbus (FBSpeedReference)
4	Motor potentiometer reference
5	AI1/AI2 selection. Selection of AI2 is made programmable by DIN3 Function (P2.1.18)

2.1.15 AI2 (I_{in}) signal range ID390

1	Signal range 0 – 20 mA
2	Signal range 4 – 20 mA
3	Signal range 0 – 10V
4	Signal range 2 – 10V

Note: The selections have no effect if par. 2.2.12 > 0%, or par. 2.2.13 < 100%.

2.1.16 Analog output function ID307

This parameter selects the desired function for the analog output signal.
See **Table 8-5** for the parameter values.

2.1.17 DIN2 function ID319

This parameter has 10 selections. If digital input DIN2 is not used, set the parameter value to 0.

1	Start reverse
2	Reverse
3	Stop pulse
4	External fault Contact closed: Fault is displayed and motor stopped when the input is active
5	External fault Contact open: Fault is displayed and motor stopped when the input is not active
6	Run enable Contact open: Start of motor disabled Contact closed: Start of motor enabled Coast stop if dropped during RUN
7	Preset speed 2
8	Motor potentiometer UP Contact closed: Reference increases until the contact is opened.
9	Disable the PID-controller (Direct frequency reference)
10	Interlock 1 (can only be selected when pump and fan control is active, P2.9.1=2)

2.1.18 DIN3 function ID301

The parameter has 13 selections. If digital input DIN3 is not used, set the parameter value to 0.

1	Reverse Contact open: Forward Contact closed: Reverse
2	External fault Contact closed: Fault is displayed and motor stopped when the input is active
3	External fault Contact open: Fault is displayed and motor stopped when the input is not active
4	Fault reset Contact closed: All faults reset
5	Run enable Contact open: Start of motor disabled Contact closed: Start of motor enabled Coast stop if dropped during RUN
6	Preset speed 1
7	Preset speed 2
8	DC braking command Contact closed: In Stop mode, the DC braking operates until the contact is opened. DC-braking current is about 10% of the value selected with par. 2.4.3.
9	Motor potentiometer UP Contact closed: Reference increases until the contact is opened.
10	Motor potentiometer DOWN. Contact closed: Reference decreases until the contact is opened
11	Disable the PID-controller (Direct frequency reference)
12	PID Keypad reference 2 selection
13	Interlock 2 (can only be selected when pump and fan control is active, P2.9.1=2)
14	Thermistor input (See **Page 4-9**)
15	Force control place to I/O
16	Force control place to Fieldbus
17	AI1/AI2 selection for I/O Reference (par 2.1.14)

2.1.19 Preset speed 1 ID105

2.1.20 Preset speed 2 ID106

Parameter values are automatically limited between the minimum and maximum frequencies (par. 2.1.1 and 2.1.2).

2.1.21 Automatic restart function ID731

The automatic restart is taken into use with this parameter.

0 Disable

1 Enabled (3 automatic restarts, see par. 2.8.1 – 2.8.3)

2.1.22 Parameter conceal ID115

With this parameter you can hide all other parameter groups except the basic parameter group (B2.1).

The factory default of this parameter is 0.

0 Disabled (all parameter groups can be browsed with the keypad)

1 Enabled (only the basic parameters, B2.1, can be browsed with the keypad)

Input Signals

2.2.1 Expander board DIE1 function ID368

This parameter has 12 selections. If the expander board digital input DIN1 is not used, set the parameter value to 0.

Selections are the same as in parameter 2.1.18, except:

13 Interlock 1

2.2.2 Expander board DIE2 function ID330

The selections are the same as in parameter 2.2.1, except:

13 Interlock 2

2.2.3 Expander board DIE3 function ID369

The selections are the same as in parameter 2.2.1, except:

13 Interlock 3

2.2.4 DIN4 Function ID499

If the value of par. 2.2.6 is set to 0, AI1 functions as digital input 4.

The selections are the same as in parameter 2.2.3.

Note: If you program the analog input as DIN4, check that the jumper selections are correct (see **Figure 9-1**).

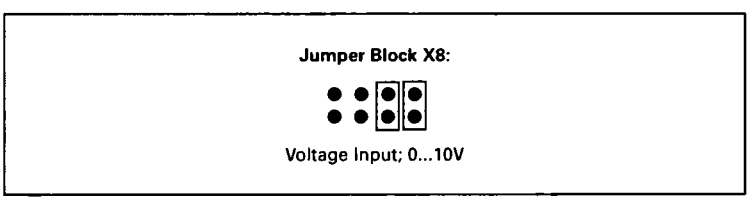

Figure 9-1: Jumper Selections of X4/X8 When AI1 Functions as DIN4

2.2.5 AI1 signal selection ID377

Connect the AI1 signal to the analog input of your choice with this parameter.

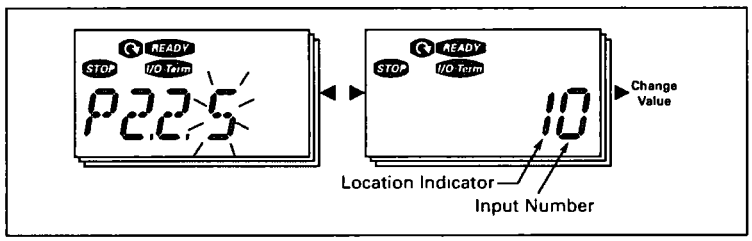

Figure 9-2: AI1 Signal Selection

The value of this parameter is built from the board indicator and the respective input terminal number. See **Figure 9-2** above.

Board indicator 1	= Local inputs
Board indicator 2	= Expander board inputs
Input number 0	= Input 1
Input number 1	= Input 2
Input number 2	= Input 3
—	
—	
Input number 9	= Input 10

Example:

If you set the value of this parameter to **10**, you have selected the local input **1** for the AI1 signal. Again, if the value is set to **21**, the expander board input 2 has been selected for the AI1 signal.

If you want to use the values of analog input signal for testing purposes only, you can set the parameter value to **0 – 9**. In this case, value **0** corresponds to **0%**, value **1** corresponds to **20%** and any value between **2** and **9** corresponds to **100%**.

2.2.6 AI1 signal range ID379

With this parameter you can select the AI1 signal range.

0 DIN 4

1 Signal range 0 – 20 mA

2 Signal range 4 – 20 mA

3 Signal range 0 – 10V

4 Signal range 2 – 10V

Note: The selections have no effect if par. 2.2.7 > 0%, or par. 2.2.8 < 100%.

If the value of par. 2.2.6 is set to 0, AI1 functions as digital input 4. See par. 2.2.4.

2.2.7 AI1 custom setting minimum ID380
2.2.8 AI1 custom setting maximum ID381

Set the custom minimum and maximum levels for the AI1 signal within 0 – 10V.

2.2.9 AI1 signal inversion ID387

By setting the parameter value to 1 the AI1 signal inversion takes place.

2.2.10 AI1 signal filter time ID378

This parameter, given a value greater than 0, activates the function that filters out disturbances from the incoming analog V_{in} signal.

Long filtering time makes the regulation response slower. See **Figure 9-3**.

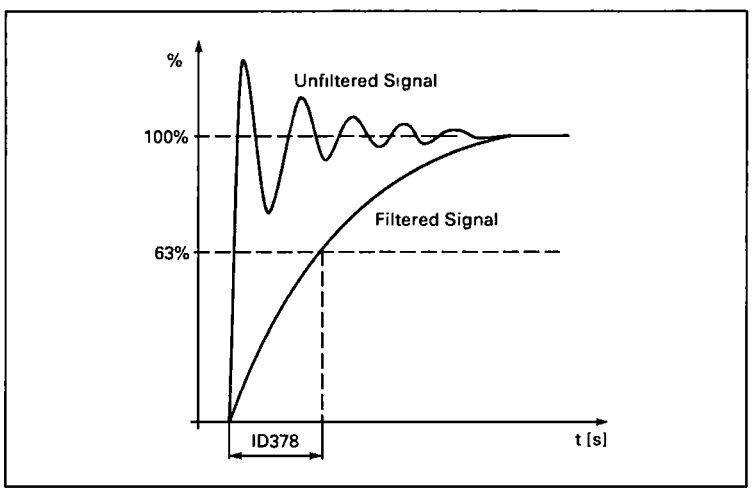

Figure 9-3: AI1 Signal Filtering

2.2.11 AI2 signal selection ID388

Connect the AI2 signal to the analog input of your choice with this parameter. See par. 2.2.5 for the value setting procedure.

2.2.12 AI2 signal range ID390

1	Signal range 0 – 20 mA
2	Signal range 4 – 20 mA
3	Signal range 0 – 10V
4	Signal range 2 – 10V

Note: The selections have no effect if par. 2.2.13 > 0%, or par. 2.2.14 < 100%.

2.2.13 AI2 custom minimum ID391
2.2.14 AI2 custom maximum ID392

These parameters allow you to scale the input current signal between 0 and 20 mA.

Similar to parameters 2.2.7 and 2.2.8.

2.2.15 Analog input AI2 signal inversion ID398

See corresponding parameter 2.2.9.

2.2.16 Analog input AI2 signal filter time ID389

See corresponding parameter 2.2.10.

2.2.17 Motor potentiometer memory reset (Frequency reference) ID367

0	No reset
1	Memory reset in stop and powerdown
2	Memory reset in powerdown

2.2.18 Reference scaling minimum value ID344
2.2.19 Reference scaling maximum value ID345

You can choose a scaling range for the frequency reference between the Minimum and Maximum frequency. If no scaling is desired set the parameter value to 0.

In **Figure 9-4**, voltage input AI1 with signal range 0 – 10V is selected for reference.

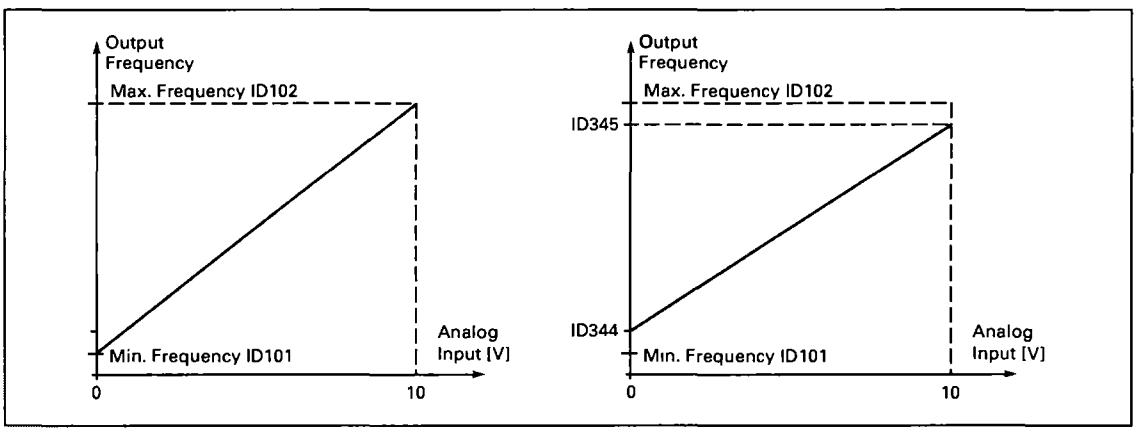

Figure 9-4: Without (Left) and With (Right) Reference Scaling

2.1.20 Keypad frequency reference selection ID121

Defines the selected reference source when the drive is controlled from the keypad.

0	AI1 reference (by default AI1, terminals 2 and 3, e.g. potentiometer)
1	AI2 reference (by default AI2, terminals 5 and 6, e.g. transducer)
2	Keypad reference (parameter 3.2)
3	Reference from Fieldbus (FBSpeedReference)
4	Motor potentiometer reference
5	PID-controller reference

2.2.21 Fieldbus frequency reference selection ID122

Defines the selected reference source when the drive is controlled from the fieldbus. For the parameter values, see par. 2.2.20.

Output Signals

2.3.1 Relay output 1 function ID313

2.3.2 Expander board relay output 1 function ID314

2.3.3 Expander board relay output 2 function ID317

2.3.4 Expander board digital output 1 function ID312

Table 9-1: Output Signals via RO1 and Expander Board RO1, RO2 and DO1

Setting value		Signal content
0	Not used	Out of operation
Relay output RO1 and expander board programmable relays (RO1, RO2) are activated when:		
1	Ready	The drive is ready to operate
2	Run	The drive operates (motor is running)
3	Fault	A fault trip has occurred
4	Fault inverted	A fault trip not occurred
5	Drive overheat warning	The heatsink temperature exceeds +70°C
6	External fault or warning	Fault or warning depending on par. 2.7.2
7	Reference fault or warning	Fault or warning depending on par. 2.7.1 – if analog reference is 4 – 20 mA and signal is <4 mA
8	Warning	Always if a warning exists
9	Reversed	The reverse command has been selected
10	Preset speed	A preset speed has been selected
11	At speed	The output frequency has reached the set reference
12	Motor regulator activated	Overvoltage or overcurrent regulator was activated
13	Output frequency limit 1 supervision	The output frequency goes outside the set supervision low limit/high limit (see parameters 2.3.12 and 2.3.13 below)
14	Control from I/O terminals	Selected control place (Menu K3; par. 3.1) is "I/O terminal"
15	Thermistor fault or warning	The thermistor input of option board indicates overtemperature. Fault or warning depending on parameter 2.7.19.
16	Actual value supervision active	Parameters 2.7.22 – 2.7.24
17	Autochange 1 control	Pump 1 control, parameters 2.10.1 – 2.10.7
18	Autochange 2 control	Pump 2 control, parameters 2.10.1 – 2.10.7
19	Autochange 3 control	Pump 3 control, parameters 2.10.1 – 2.10.7
20	AI supervision	The relay energizes according to settings of parameters 2.3.14 – 2.3.16.

2.3.5 Analog output function ID307

This parameter selects the desired function for the analog output signal.

See **Table 8-5** for the parameter values.

2.3.6 Analog output filter time ID308

Defines the filtering time of the analog output signal.

If you set value 0 for this parameter, no filtering takes place.

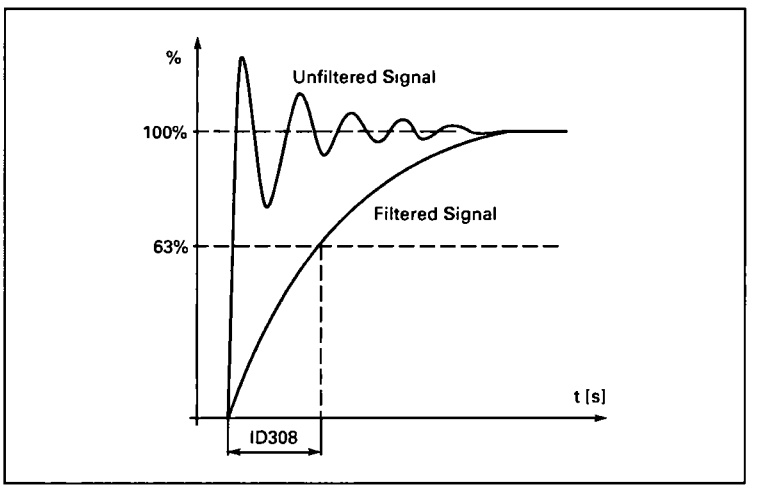

Figure 9-5: Analog Output Filtering

2.3.7 Analog output invert ID309

Inverts the analog output signal:

Maximum output signal = 0%

Minimum output signal = Maximum set value (parameter 2.3.9)

0 Not inverted

1 Inverted

See parameter 2.3.9 below.

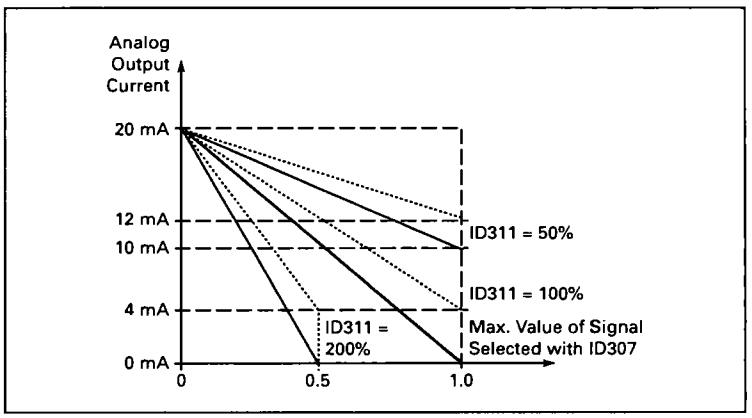

Figure 9-6: Analog Output Invert

2.3.8 Analog output minimum ID310

Sets the signal minimum to either 0 mA or 4 mA (living zero). Note the difference in the analog output scaling in parameter 2.3.9.

2.3.9 Analog output scale ID311

Scaling factor for the analog output.

Table 9-2: Analog Output Scaling

Signal	Max. value of the signal
Output frequency	100% x f_{max}
Motor speed	100% x Motor nom. speed
Output current	100% x I_{nMotor}
Motor torque	100% x T_{nMotor}
Motor power	100% x P_{nMotor}
Motor voltage	100% x V_{nmotor}
DC-link voltage	1000 V
PI-ref. value	100% x ref. value max.
PI act. value 1	100% x actual value max.
PI error value	100% x error value max.
PI output	100% x output max.

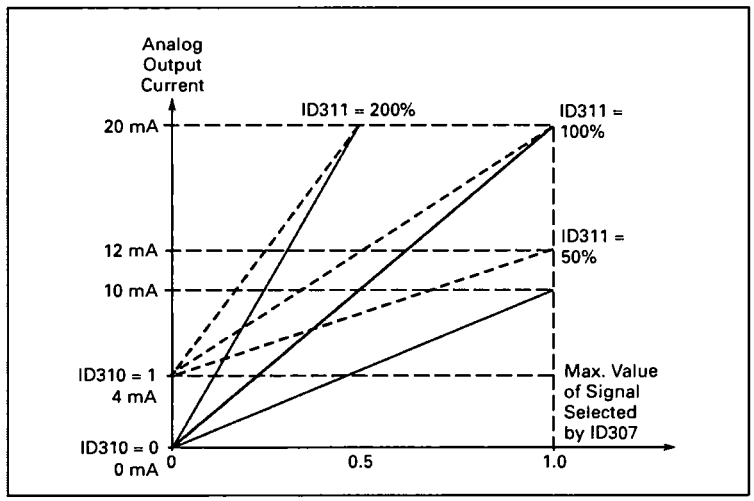

Figure 9-7: Analog Output Scaling

2.3.10 Expander board analog output 1 function ID472
2.3.11 Expander board analog output 2 function ID479

These parameters select the desired functions for the expander board analog output signals. See par. 2.1.16 for the parameter values.

2.3.12 Output frequency limit 1 supervision function ID315

0 No supervision

1 Low limit supervision

2 High limit supervision

If the output frequency goes under/over the set limit (par. 2.3.13) this function generates a warning message via the relay outputs depending on the settings of parameters 2.3.1 – 2.3.4.

2.3.13 Output frequency limit 1 supervised value ID316

Selects the frequency value supervised by parameter 2.3.12.

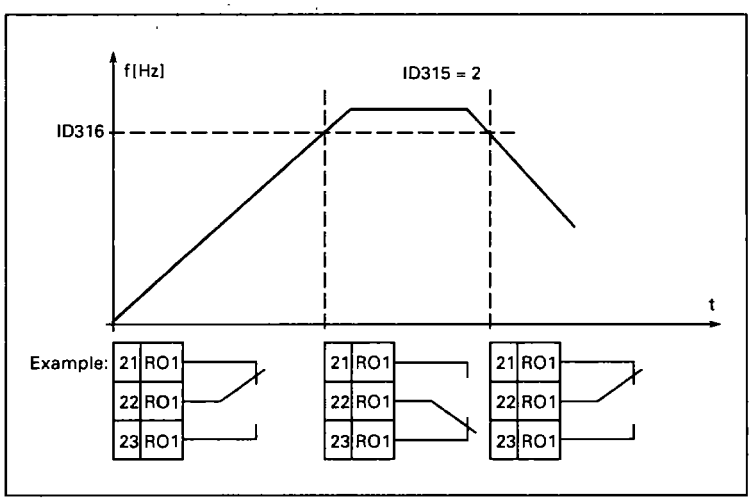

Figure 9-8: Output Frequency Supervision

2.3.14 Analog input supervision ID356

With this parameter you can select the analog input to be supervised.

0 Not used

1 AI1

2 AI2

2.3.15 Analog input supervision OFF limit ID357

When the signal of analog input selected with par. 2.3.14 falls under the limit set with this parameter, the relay output goes off.

2.3.16 Analog input supervision ON limit ID358

When the signal of analog input selected with par. 2.3.14 goes over the limit set with this parameter, the relay output goes on.

This means that if for example ON limit is 60% and OFF limit is 40%, the relay goes on when signal goes over 60% and remains on until it falls under 40%.

2.3.17 Relay output 1 ON delay ID487

2.3.18 Relay output 1 OFF delay ID488

With these parameters you can set on- and off-delays to relay output 1 (par 2.3.1).

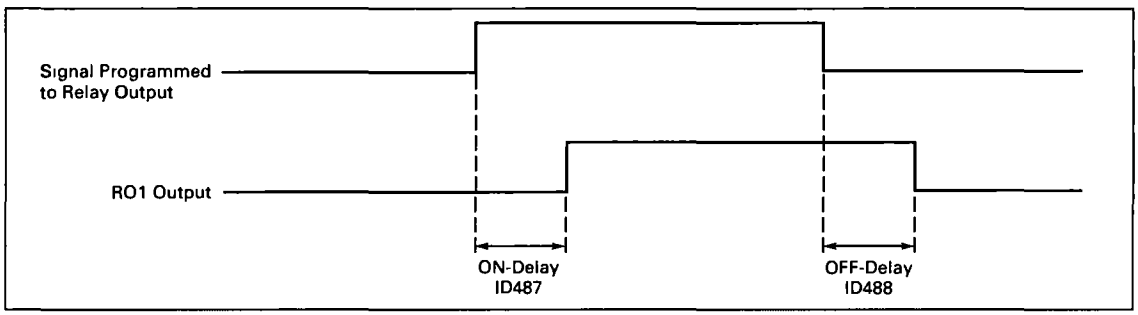

Figure 9-9: Relay Output 1 ON- and OFF-Delays

Drive Control

2.4.1 Acceleration/Deceleration ramp 1 shape ID500

The start and end of the acceleration and deceleration ramps can be smoothed with this parameter. Setting value 0 gives a linear ramp shape which causes acceleration and deceleration to act immediately to the changes in the reference signal.

Setting value 0.1 – 10 seconds for this parameter produces an S-shaped acceleration/ deceleration. The acceleration time is determined with parameters 2.1.3/2.1.4.

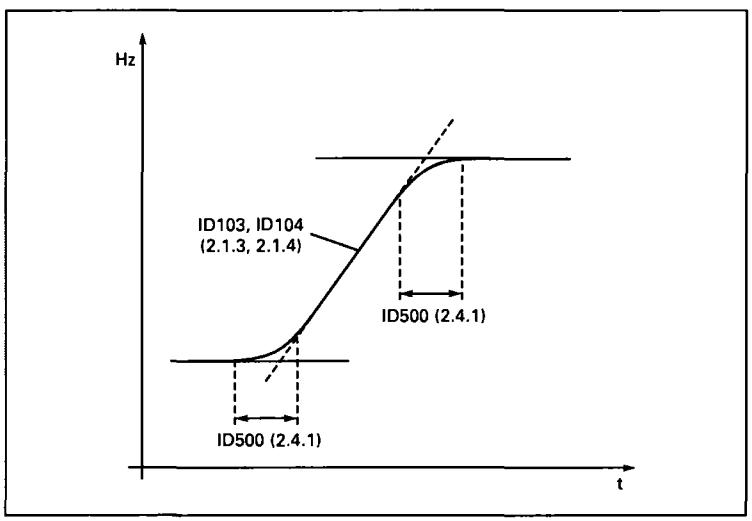

Figure 9-10: Acceleration/Deceleration (S-Shaped)

2.4.2 Brake chopper ID504

Note: An internal brake chopper is installed.

0	No brake chopper used
1	Brake chopper used in Run state
3	Used in Run and Stop state

When the drive is decelerating the motor, the inertia of the motor and the load are fed into an external brake resistor. This enables the drive to decelerate the load with a torque equal to that of acceleration (provided that the correct brake resistor has been selected). See separate Brake resistor installation manual.

2.4.3 DC-braking current ID507

Defines the current injected into the motor during DC-braking.

2.4.4 DC-braking time at stop ID508

Determines if braking is ON or OFF and the braking time of the DC-brake when the motor is stopping. The function of the DC-brake depends on the stop function, parameter 2.1.12.

0	DC-brake is not used
>0	DC-brake is in use and its function depends on the Stop function, (par. 2.1.12). The DC-braking time is determined with this parameter.

Par. 2.1.12 = 0 (Stop function = Coasting):

After the stop command, the motor coasts to a stop without control from the drive.

With the DC injection, the motor can be electrically stopped in the shortest possible time, without using an optional external braking resistor.

The braking time is scaled by the frequency when the DC-braking starts. If the frequency is greater than the nominal frequency of the motor, the set value of parameter 2.4.4 determines the braking time. When the frequency is ≤10% of the nominal, the braking time is 10% of the set value of parameter 2.4.4.

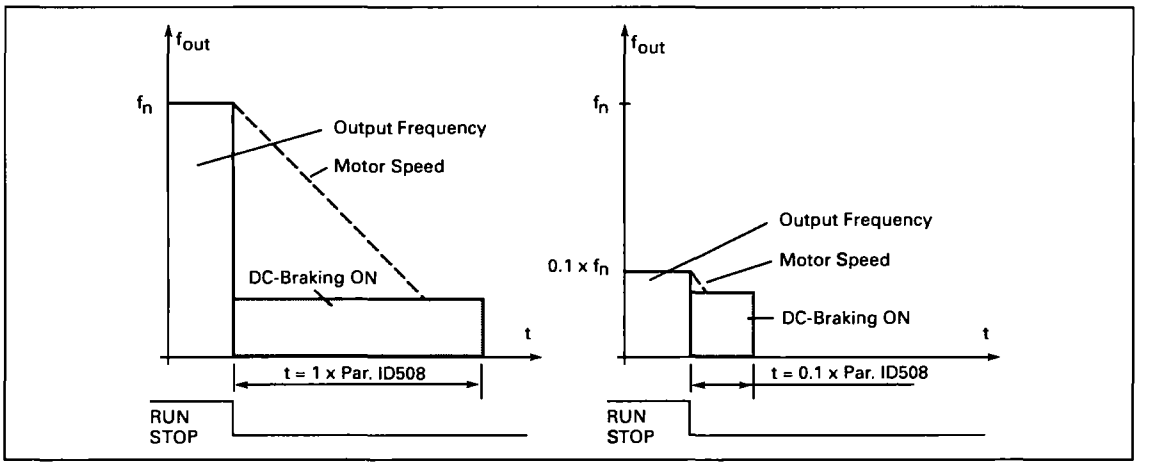

Figure 9-11: DC-Braking Time When Stop Mode = Coasting

Par. 2.1.12 = 1 (Stop function = Ramp):

After the Stop command, the speed of the motor is reduced according to the set deceleration parameters, as fast as possible, to the speed defined with parameter 2.4.5, where the DC-braking starts.

The braking time is defined with parameter 2.4.4. If high inertia exists, it is recommended to use an external braking resistor for faster deceleration. See **Figure 9-12.**

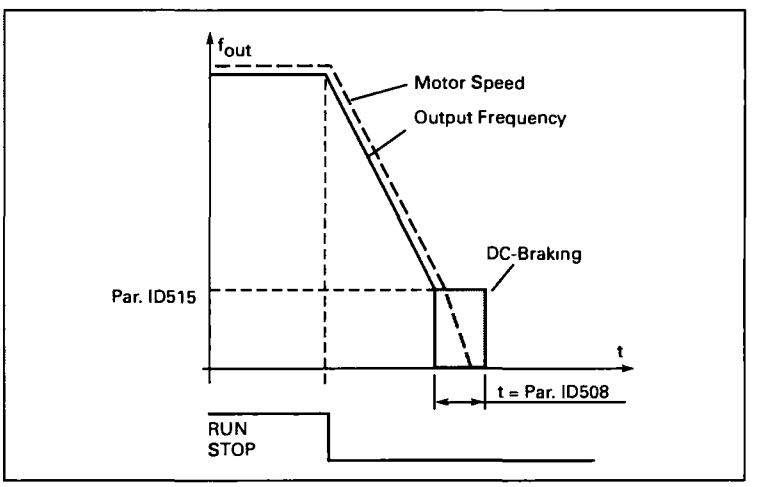

Figure 9-12: DC-Braking Time When Stop Mode = Ramp

2.4.5 DC-braking frequency in ramp stop ID515

The output frequency at which the DC-braking is applied. See **Figure 9-12.**

2.4.6 DC-braking time at start ID516

DC-brake is activated when the start command is given. This parameter defines the time before the brake is released. After the brake is released, the output frequency increases according to the set start function by parameter 2.1.11. See **Figure 9-13**.

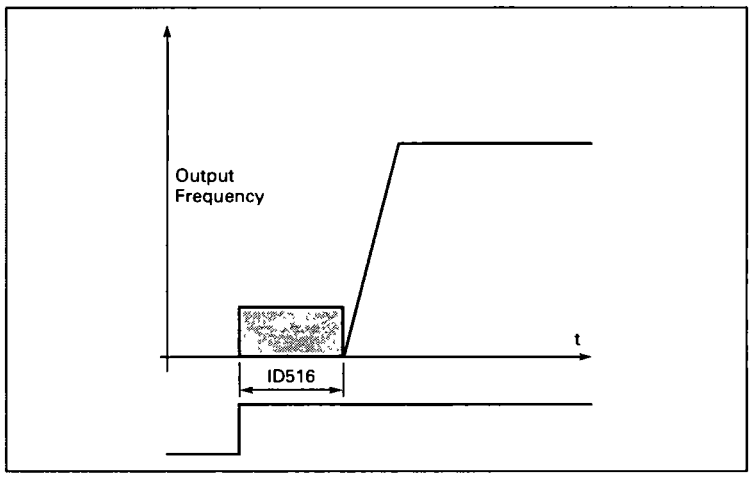

Figure 9-13: DC Braking Time at Start

2.4.7 Flux brake ID520

Instead of DC braking, flux braking is a useful form of braking with motors ≤15 kW.

When braking is needed, the frequency is reduced and the flux in the motor is increased, which in turn increases the motor's capability to brake. Unlike DC braking, the motor speed remains controlled during braking.

Flux braking can be set ON or OFF.

0 Flux braking OFF

1 Flux braking ON

Note: Flux braking converts the energy into heat at the motor and should be used intermittently to avoid motor damage.

2.4.8 Flux braking current ID519

Defines the flux braking current value. It can be set between 0.3 x I_H (approximately) and the current limit.

Prohibit Frequencies

2.5.1 Prohibit frequency area 1; Low limit ID509
2.5.2 Prohibit frequency area 1; High limit ID510

In some systems it may be necessary to avoid certain frequencies because of mechanical resonance problems. With these parameters it is possible to set a limit for the "skip frequency" region. See **Figure 9-14.**

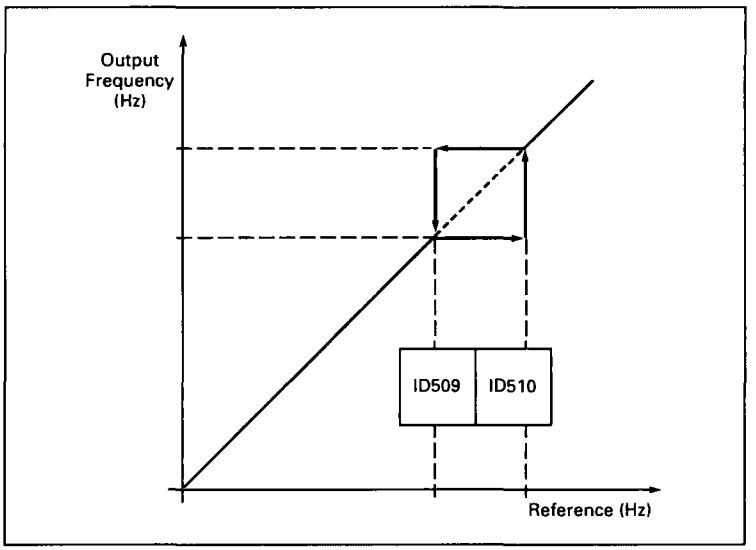

Figure 9-14: Prohibit Frequency Area Setting

2.5.3 Acceleration/deceleration ramp speed scaling ratio between prohibit frequency limits ID518

Defines the acceleration/deceleration time when the output frequency is between the selected prohibit frequency range limits (parameters 2.5.1 and 2.5.2). The ramping time (selected acceleration/ deceleration time 1 or 2) is multiplied with this factor. E.g. value 0.1 makes the acceleration time 10 times shorter than outside the prohibit frequency range limits.

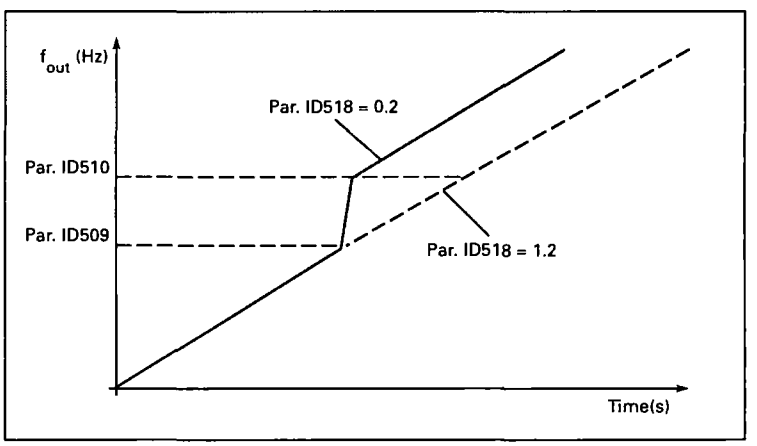

Figure 9-15: Ramp Speed Scaling Between Prohibit Frequencies

Motor Control

2.6.1 Motor control mode ID600

0 Frequency control: The I/O terminal and keypad references are frequency references and the drive controls the output frequency (output frequency resolution = 0.01 Hz).

1 Speed control: The I/O terminal and keypad references are speed references and the drive controls the motor speed (accuracy ± 0.5%).

2.6.2 VHz ratio selection ID108

Linear: 0 The voltage of the motor changes linearly with the frequency in the constant flux area from 0 Hz to the field weakening point where the nominal voltage is supplied to the motor. Linear VHz ratio should be used in constant torque applications. See **Figure 9-16.**

This default setting should be used if there is no special need for another setting.

Squared: 1 The voltage of the motor changes following a squared curve form with the frequency in the area from 0 Hz to the field weakening point where the nominal voltage is also supplied to the motor. The motor runs under magnetized below the field weakening point and produces less torque and electromechanical noise. Squared VHz ratio can be used in applications where torque demand of the load is proportional to the square of the speed, e.g in centrifugal fans and pumps.

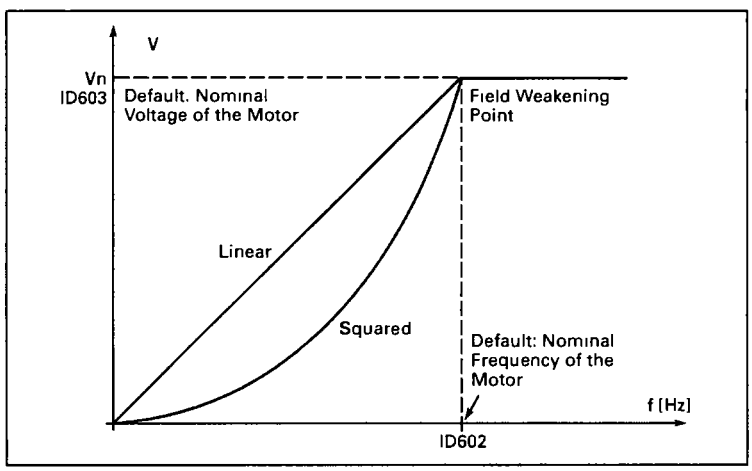

Figure 9-16: Linear and Squared Change of Motor Voltage

Programmable VHz curve: 2 The VHz curve can be programmed with three different points. Programmable VHz curve can be used if the other settings do not satisfy the needs of the application.

Linear with flux optimization: 3 The drive starts to search for the minimum motor current and in order to save energy, lower the disturbance level and the noise. Can be used in applications with constant motor load, such as fans, pumps, etc.

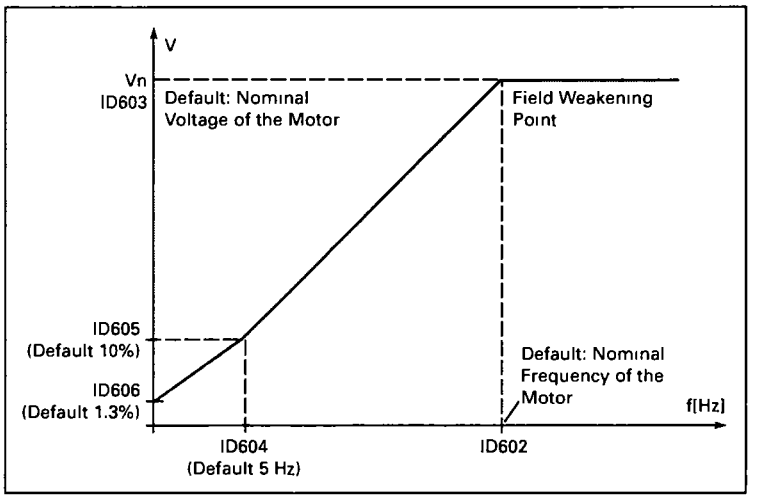

Figure 9-17: Programmable VHz Curve

2.6.3 Field weakening point ID602

The field weakening point is the output frequency at which the output voltage reaches the value set with par. 2.6.4.

2.6.4 Voltage at field weakening point ID603

Above the frequency at the field weakening point, the output voltage remains at the value set with this parameter. Below the frequency at the field weakening point, the output voltage depends on the setting of the VHz curve parameters. See parameters 2.1.13, 2.6.2, 2.6.5, 2.6.6 and 2.6.7 and **Figure 9-17.**

When the parameters 2.1.6 and 2.1.7 (nominal voltage and nominal frequency of the motor) are set, the parameters 2.6.3 and 2.6.4 are automatically given the corresponding values. If you need different values for the field weakening point and the voltage, change these parameters after setting the parameters 2.1.6 and 2.1.7.

2.6.5 VHz curve, middle point frequency ID604

If the programmable VHz curve has been selected with parameter 2.6.2, this parameter defines the middle point frequency of the curve. See **Figure 9-17.**

2.6.6 VHz curve, middle point voltage ID605

If the programmable VHz curve has been selected with the parameter 2.6.2, this parameter defines the middle point voltage of the curve. See **Figure 9-17.**

2.6.7 Output voltage at zero frequency ID606

This parameter defines the zero frequency voltage of the curve. See **Figure 9-17.**

2.6.8 Switching frequency ID601

Motor noise can be minimized using a high switching frequency. Increasing the switching frequency reduces the capacity of the drive.

Switching frequency for SLX9000: 1 – 16 kHz

2.6.9 Overvoltage controller ID607
2.6.10 Undervoltage controller ID608

These parameters allow the under-/overvoltage controllers to be switched out of operation. This may be useful, for example, if the utility supply voltage varies more than -15% to +10% and the application will not tolerate this over-/undervoltage. This regulator controls the output frequency taking the supply fluctuations into account.

Note: Over-/undervoltage trips may occur when controllers are switched out of operation.

0 Controller switched off

1 Controller switched on

2.6.11 Identification ID631

0 No action

1 ID no run

When ID no run is selected, the drive will perform an ID-run when it is started from selected control place. Drive has to be started within 20 seconds, otherwise identification is aborted.

The drive does not rotate the motor during ID no run. When ID run is ready, the drive is stopped. Drive will start normally when the next start command is given.

The ID run improves the torque calculations and the automatic torque boost function. It will also result in a better slip compensation in speed control (more accurate RPM).

Protections

2.7.1 Response to 4 mA reference fault ID700

0 No response

1 Warning

2 Fault, stop mode after fault according to parameter 2.1.12

3 Fault, stop mode after fault always by coasting

A warning or a fault action and message is generated if the 4 – 20 mA reference signal is used and the signal falls below 3.5 mA for 5 seconds or below 0.5 mA for 0.5 seconds. The information can also be programmed into relay outputs.

2.7.2 Response to external fault ID701

0 No response

1 Warning

2 Fault, stop mode after fault according to parameter 2.1.12

3 Fault, stop mode after fault always by coasting

A warning or a fault action and message is generated from the external fault signal in the programmable digital inputs. The information can also be programmed into relay outputs.

2.7.3 Response to undervoltage fault ID727

1 Warning

2 Fault, stop mode after fault according to parameter 2.1.12

3 Fault, stop mode after fault always by coasting

For the undervoltage limits see **Table 1-8**.

Note: This protection can not be inactivated.

2.7.4 Output phase supervision ID702

0 No response

1 Warning

2 Fault, stop mode after fault according to parameter 2.1.12

3 Fault, stop mode after fault always by coasting

Output phase supervision of the motor ensures that the motor phases have an approximately equal currents.

2.7.5 Ground fault protection ID703

0 No response

1 Warning

2 Fault, stop mode after fault according to parameter 2.1.12

3 Fault, stop mode after fault always by coasting

Ground fault protection ensures that the sum of the motor phase currents is zero. The overcurrent protection is always working and protects the drive from ground faults with high currents.

Motor Thermal Protection:

The motor thermal protection is to protect the motor from overheating. The drive is capable of supplying higher than nominal current to the motor. If the load requires this high current, there is a risk that the motor will be thermally overloaded. This is the case especially at low frequencies. At low frequencies the cooling effect of the motor is reduced as well as its capacity. If the motor is equipped with an external fan, the load reduction at low speeds is small.

The motor thermal protection is based on a calculated model and it uses the output current of the drive to determine the load on the motor.

The motor thermal protection can be adjusted with parameters. The thermal current I_T specifies the load current above which the motor is overloaded. This current limit is a function of the output frequency.

⚠ CAUTION

The calculated model does not protect the motor if the airflow to the motor is reduced by blocked air intake grill.

2.7.6 Motor thermal protection ID704

0 No Response

1 Warning

2 Fault, stop mode after fault according to parameter 2.1.12

3 Fault, stop mode after fault always by coasting

If tripping is selected, the drive will stop and activate the fault stage.

Deactivating the protection, i.e. setting parameter to 0, will reset the thermal model of the motor to 0%.

2.7.7 Motor thermal protection: Motor ambient temperature factor ID705

When the motor ambient temperature must be taken into consideration, it is recommended to set a value for this parameter. The value of the factor can be set between -100.0% and 100.0% where -100.0% corresponds to 0°C and 100.0% to the maximum running ambient temperature of the motor. Setting this parameter value to 0% assumes that the ambient temperature is the same as the temperature of the heatsink at power-on.

2.7.8 Motor thermal protection: Cooling factor at zero speed ID706

The cooling power can be set between 0 – 150.0% x cooling power at nominal frequency. See **Figure 9-18**.

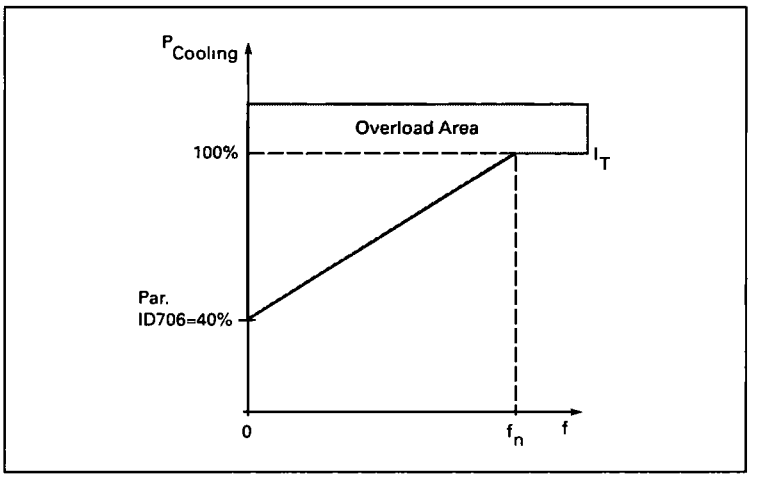

Figure 9-18: Motor Cooling Power

2.7.9 Motor thermal protection: Time constant ID707

This time can be set between 1 and 200 minutes.

This is the thermal time constant of the motor. The bigger the motor, the bigger the time constant. The time constant is the time within which the calculated thermal model has reached 63% of its final value.

The motor thermal time is specific to the motor design and it varies between different motor manufacturers.

If the motor's t6-time (t6 is the time in seconds the motor can safely operate at six times the rated current) is known (given by the motor manufacturer) the time constant parameter can be set basing on it. As a rule of thumb, the motor thermal time constant in minutes equals to 2xt6. If the drive is in stop state, the time constant is internally increased to three times the set parameter value. The cooling in the stop state is based on convection and the time constant is increased. See also **Figure 9-19.**

Note: If the nominal speed (par. 2.1.8) or the nominal current (par. 2.1.9) of the motor are changed, this parameter is automatically set to the default value (45).

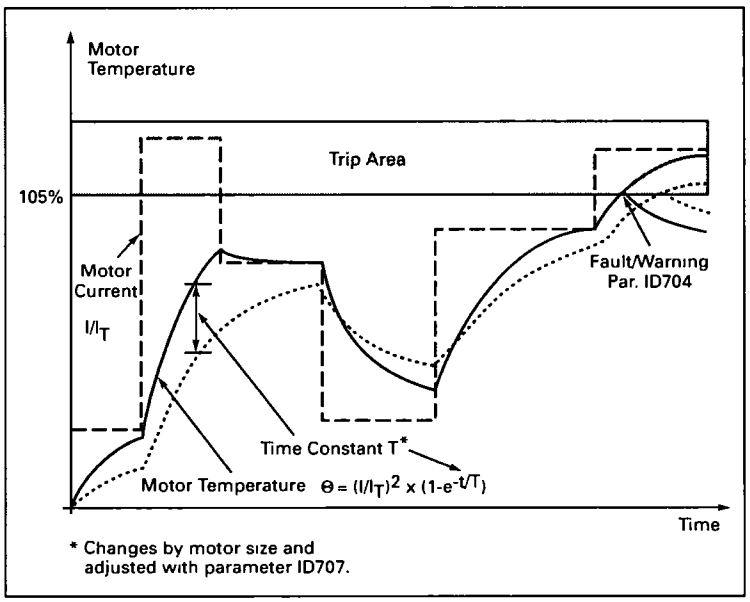

Figure 9-19: Motor Temperature Calculation

2.7.10 Motor thermal protection: Motor duty cycle ID708

Defines how much of the nominal motor load is applied.

The value can be set to 0% – 100%.

Stall Protection

The motor stall protection protects the motor from short time overload situations such as one caused by a stalled shaft. The reaction time of the stall protection can be set shorter than that of motor thermal protection. The stall state is defined with two parameters, 2.7.12 (Stall current) and 2.7.13 (Stall frequency). If the current is higher than the set limit and output frequency is lower than the set limit, the stall state is true. There is actually no real indication of the shaft rotation. Stall protection is a type of overcurrent protection.

2.7.11 Stall protection ID709

0 No response

1 Warning

2 Fault, stop mode after fault according to parameter 2.1.12

3 Fault, stop mode after fault always by coasting

Setting the parameter to 0 will deactivate the protection and reset the stall time counter.

2.7.12 Stall current limit ID710

The current can be set to 0.0 – I_{nMotor}*2. For a stall stage to occur, the current must have exceeded this limit. See **Figure 9-20.** The software does not allow entering a greater value than I_{nMotor}*2. If the parameter 2.1.9 Nominal current of motor is changed, this parameter is automatically restored to the default value (I_{nMotor}*1.3).

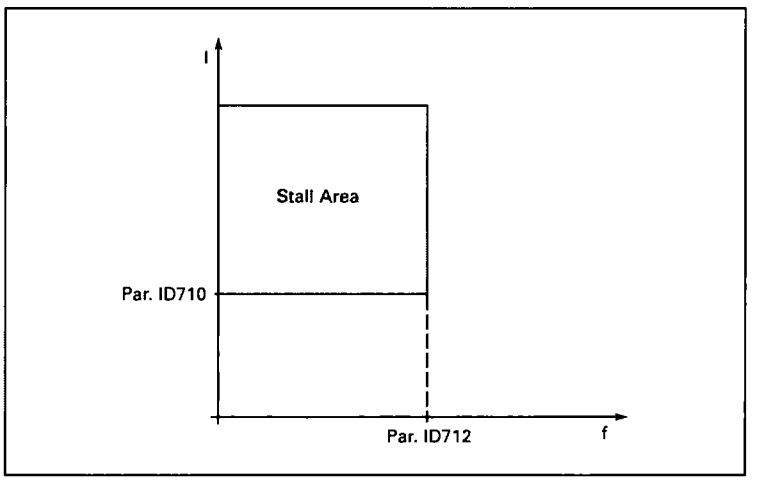

Figure 9-20: Stall Characteristics Settings

2.7.13 Stall time ID711

This time can be set between 1.0 and 120.0s.

This is the maximum time allowed for a stall event detection. The stall time is counted by an internal up/down counter.

If the stall time counter value goes above this limit, the protection will cause a trip (see **Figure 9-21**).

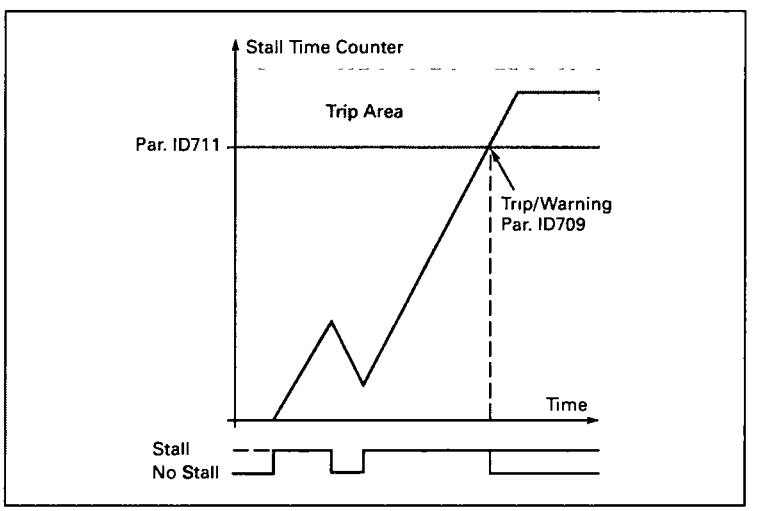

Figure 9-21: Stall Time Count

2.7.14 Maximum stall frequency ID712

The frequency can be set between 1-fmax (par. 2.1.2).

For a stall event to occur, the output frequency must have remained below this limit.

Underload Protection

The purpose of the motor underload protection is to ensure that there is load on the motor when the drive is running. If the motor loses its load, there might be a problem in the process, e.g. a broken belt or a dry pump.

Motor underload protection can be adjusted by setting the underload curve with parameters 2.7.16 (Field weakening area load) and 2.7.17 (Zero frequency load), see below. The underload curve is a squared curve set between the zero frequency and the field weakening point. The protection is not active below 5 Hz (the underload time counter is stopped).

The torque values for setting the underload curve are set in percentage of nominal torque of the motor. The motor's nameplate data, the parameter Motor nominal current and the drive's nominal current I_L are used to find the scaling ratio for the internal torque value. If other than nominal motor is used with the drive, the accuracy of the torque calculation decreases.

2.7.15 Underload protection ID713

0 No response

1 Warning

2 Fault, stop mode after fault according to parameter 2.1.12

3 Fault, stop mode after fault always by coasting

If tripping is set active, the drive will stop and activate the fault stage.

Deactivating the protection by setting the parameter to 0 will reset the underload time counter.

2.7.16 Underload protection, field weakening area load ID714

The torque limit can be set between 10.0 and 150.0% x T_{nMotor}.

This parameter gives the value for the minimum torque allowed when the output frequency is above the field weakening point. See **Figure 9-22**.

If you change the parameter 2.1.9 (Motor nominal current), this parameter is automatically restored to the default value.

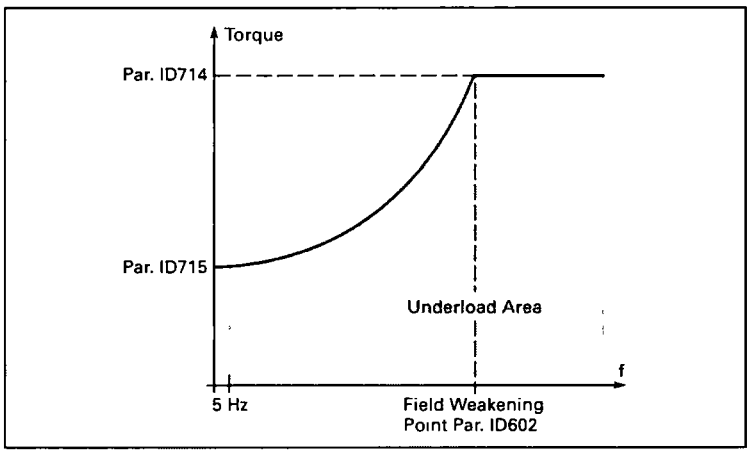

Figure 9-22: Setting of Minimum Load

2.7.17 Underload protection, zero frequency load ID715

The torque limit can be set between 5.0 and 150.0% x T_{nMotor}.

This parameter gives value for the minimum torque allowed with zero frequency. See **Figure 9-22.**

If you change the value of parameter 2.1.9 (Motor nominal current), this parameter is automatically restored to the default value.

2.7.18 Underload time ID716

This time can be set between 2.0 and 600.0 s.

This is the maximum time allowed for an underload state to exist. An internal up/down counter counts the accumulated underload time. If the underload counter value goes above this limit the protection will cause a trip according to parameter 2.7.15). If the drive is stopped, the underload counter is reset to zero. See **Figure 9-23.**

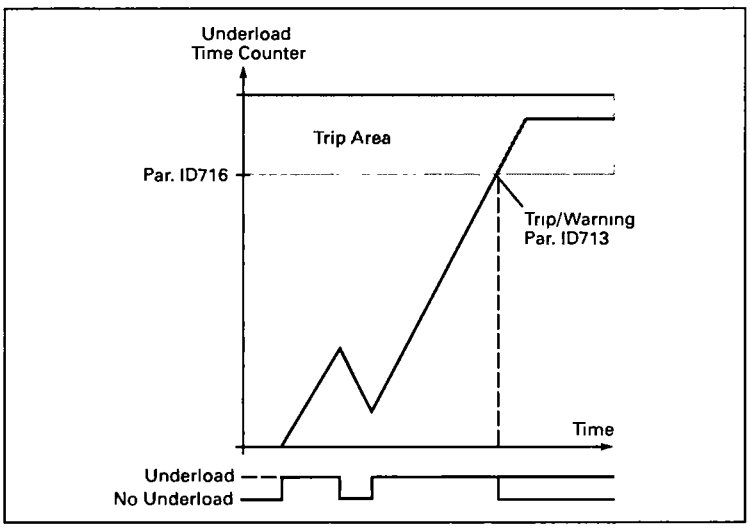

Figure 9-23: Underload Time Counter Function

2.7.19 Response to thermistor fault ID732

0 No response

1 Warning

2 Fault, stop mode after fault according to parameter 2.1.12

3 Fault, stop mode after fault always by coasting

Setting the parameter to 0 will deactivate the protection.

2.7.20 Response to fieldbus fault ID733

Sets the response mode for the fieldbus fault if a fieldbus board is used. For more information, see the respective Fieldbus Board Manual.

See parameter 2.7.19.

2.7.21 Response to slot fault ID734

Sets the response mode for a board slot fault due to missing or broken board.

See parameter 2.7.19.

2.7.22 Actual value supervision function ID735

0 Not used

1 Warning, if actual value falls below the limit set with par. 2.7.23

2 Warning, if actual value exceeds the limit set with par. 2.7.23

3 Fault, if actual value falls below the limit set with par. 2.7.23

4 Fault, if actual value exceeds the limit set with par. 2.7.23

2.7.23 Actual value supervision limit ID736

With this parameter you can set the limit of actual value supervised by par. 2.7.22.

2.7.24 Actual value supervision delay ID737

Sets the delay for the actual value supervision function (par. 2.7.22).

If this parameter is in use, the function of par. 2.7.22 will be active only when the actual value stays outside the defined limit for the time determined by this parameter.

Auto Restart Parameters

The automatic restart function is active if the value of par. 2.1.21 = 1. There are always three restart trials.

2.8.1 Automatic restart: Wait time ID717

Defines the time before the drive tries to automatically restart the motor after the fault has disappeared.

2.8.2 Automatic restart: Trial time ID718

The Automatic restart function restarts the drive when the faults have disappeared and the waiting time has elapsed.

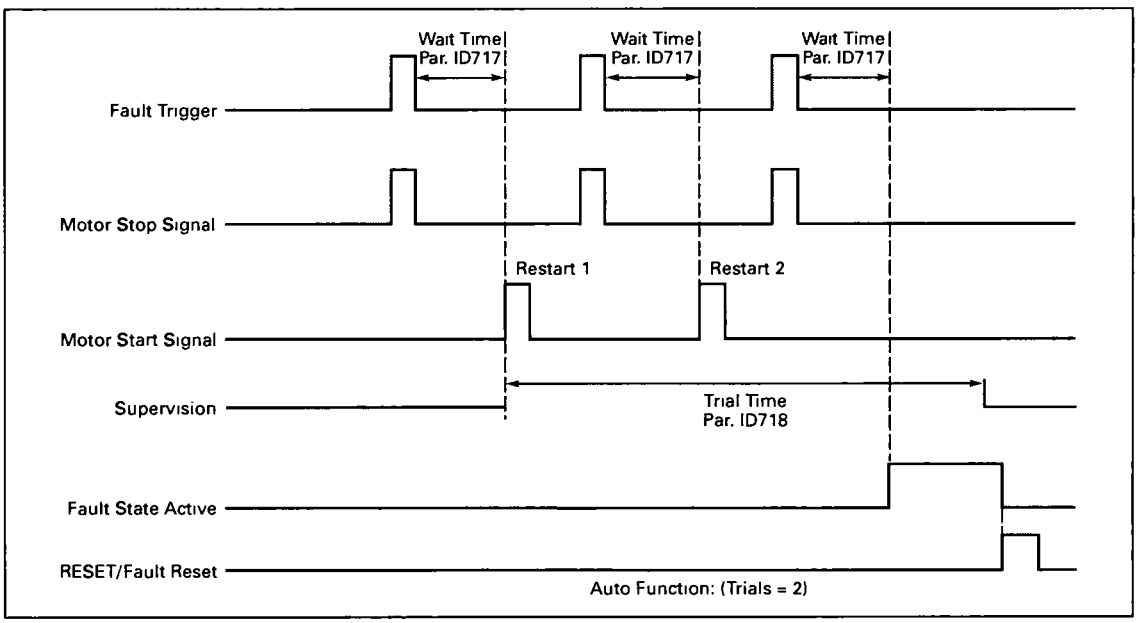

Figure 9-24: Automatic Restart

The time count starts from the first autorestart. If the number of faults occurring during the trial time exceeds three, the fault state becomes active. Otherwise the fault is cleared after the trial time has elapsed and the next fault starts the trial time count again.

If a single fault remains during the trial time, a fault state is true.

2.8.3 Automatic restart, start function ID719

The Start function for Automatic restart is selected with this parameter. The parameter defines the start mode:

0 Start with ramp

1 Flying start

2 Start according to par. 2.1.11

PID Reference Parameters

2.9.1 PID activation ID163

With this parameter you can activate or deactivate the PID controller or activate the pump and fan control parameters.

0	PID controller deactivated
1	PID controller activated
2	Pump and fan control activated. Parameter group P2.10 becomes visible.

2.9.2 PID reference ID332

Defines which frequency reference source is selected for the PID controller. Default value is 2.

0	AI1 reference
1	AI2 reference
2	PID reference from the Keypad control page (Group K3, parameter R3.5)
3	Reference from the fieldbus (FBProcessDataIN1)

2.9.3 Actual value input ID334

0	AI1
1	AI2
2	Fieldbus (Actual value 1: FBProcessDataIN2; Actual value 2: FBProcessDataIN3)
3	Motor torque
4	Motor speed
5	Motor current
6	Motor power

2.9.4 PID controller gain ID118

This parameter defines the gain of the PID controller. If the value of the parameter is set to 100% a change of 10% in the error value causes the controller output to change by 10%.

If the parameter value is set to 0 the PID controller operates as ID-controller.

See examples below.

2.9.5 PID controller I-time ID119

This parameter defines the integration time of the PID controller. If this parameter is set to 1.00 second, a change of 10% in the error value causes the controller output to change by 10.00%/s. If the parameter value is set to 0.00 s, the PID controller will operate as PD-controller. See examples below.

2.9.6 PID controller D-time ID132

The parameter 2.9.5 defines the derivative time of the PID controller. If this parameter is set to 1.00 second, a change of 10% in the error value during 1.00 s causes the controller output to change by 10.00%. If the parameter value is set to 0.00 s, the PID controller will operate as PI-controller.

See examples below.

Example 1:

In order to reduce the error value to zero, with the given values, the drive output behaves as follows:

Given values:

Par. 2.9.4, P = 0%	PID max limit = 100.0%
Par. 2.9.5, I-time = 1.00 s	PID min limit = 0.0%
Par. 2.9.6, D-time = 0.00 s	Min freq. = 0 Hz
Error value (setpoint - process value) = 10.00%	Max freq. = 50 Hz

In this example, the PID controller operates practically as ID-controller only.

According to the given value of parameter 2.9.5 (I-time), the PID output increases by 5 Hz (10% of the difference between the maximum and minimum frequency) every second until the error value is 0.

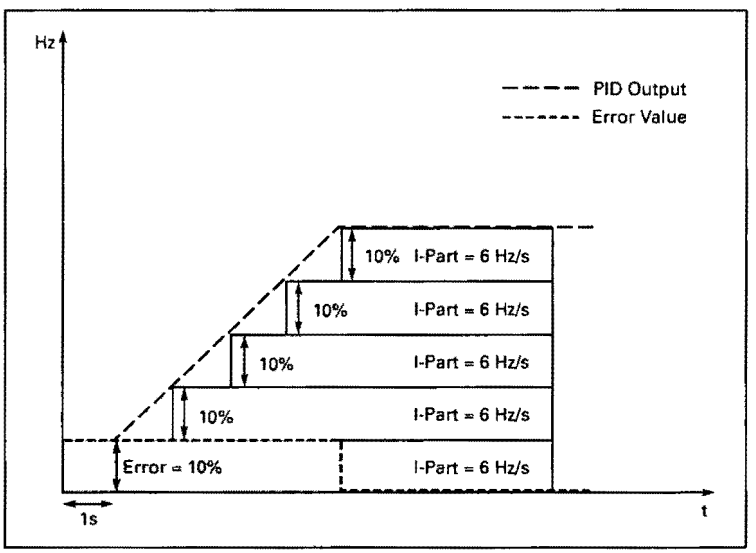

Figure 9-25: PID Controller Function as I-Controller

Example 2:

Given values:

Par. 2.9.4, P = 100%	PID max limit = 100.0%
Par. 2.9.5, I-time = 1.00 s	PID min limit = 0.0%
Par. 2.9.6, D-time = 1.00 s	Min freq. = 0 Hz
Error value (setpoint - process value) = ±10%	Max freq. = 50 Hz

As the power is switched on, the system detects the difference between the setpoint and the actual process value and starts to either raise or decrease (in case the error value is negative) the PID output according to the I-time. Once the difference between the setpoint and the process value has been reduced to 0, the output is reduced by the amount corresponding to the value of parameter 2.9.5.

In case the error value is negative, the drive reacts, reducing the output correspondingly.

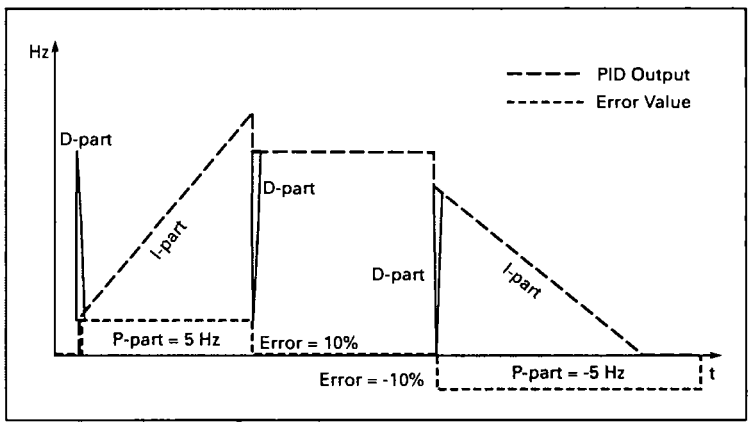

Figure 9-26: PID Output Curve with the Values of Example 2

Example 3:

Given values:

Par. 2.9.4, P = 100%	PID max limit = 100.0%
Par. 2.9.5, I-time = 0.00 s	PID min limit = 0.0%
Par. 2.9.6, D-time = 1.00 s	Min freq. = 0 Hz
Error value (setpoint - process value) = ±10%/s	Max freq. = 50 Hz

As the error value increases, the PID output also increases according to the set values (D-time = 1.00s).

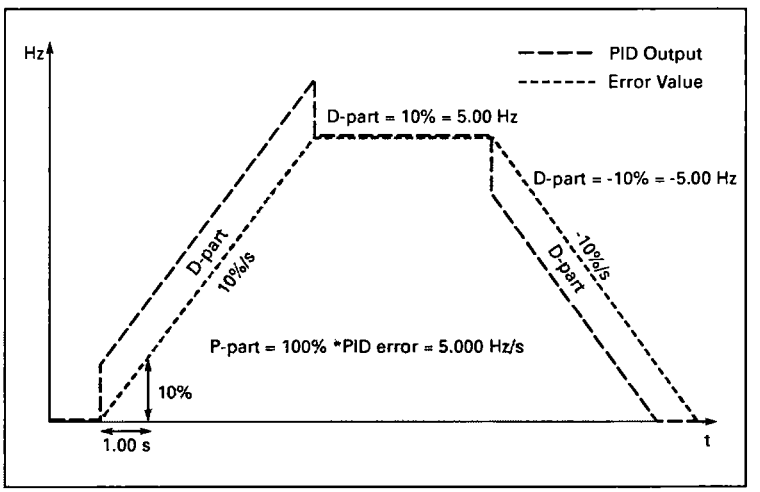

Figure 9-27: PID Output with the Values of Example 3

2.9.7 Actual value 1 minimum scale ID336

Sets the minimum scaling point for Actual value 1. See **Figure 9-28.**

2.9.8 Actual value 1 maximum scale ID337

Sets the maximum scaling point for Actual value 1. See **Figure 9-28.**

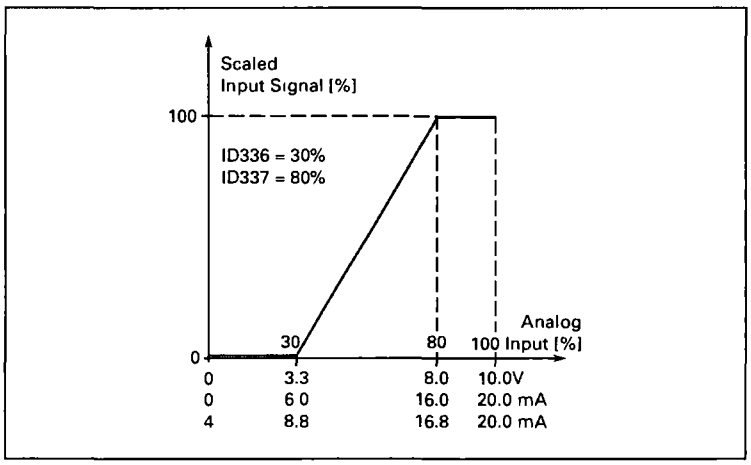

Figure 9-28: Example of Actual Value Signal Scaling

2.9.9 PID error value inversion ID340

This parameter allows you to invert the error value of the PID controller (and thus the operation of the PID controller).

0 No inversion

1 Inverted

2.9.10 Sleep frequency ID1016

The drive is stopped automatically if the frequency of the drive falls below the Sleep level defined with this parameter for a time greater than that determined by parameter 2.9.11. During the Stop state, the PID controller is operating switching the drive to Run state when the actual value signal either falls below or exceeds (see par. 2.9.13) the Wake-up level determined by parameter 2.9.12. See **Figure 9-29**.

2.9.11 Sleep delay ID1017

The minimum amount of time the frequency has to remain below the Sleep level before the drive is stopped. See **Figure 9-29**.

2.9.12 Wake-up level ID1018

The wake-up level defines the frequency below which the actual value must fall or which has to be exceeded before the Run state of the drive is restored. See **Figure 9-29**.

2.9.13 Wake-up function ID1019

This parameter defines if the restoration of the Run state occurs when the actual value signal falls below or exceeds the Wake-up level (par. 2.9.12). See **Figure 9-29**.

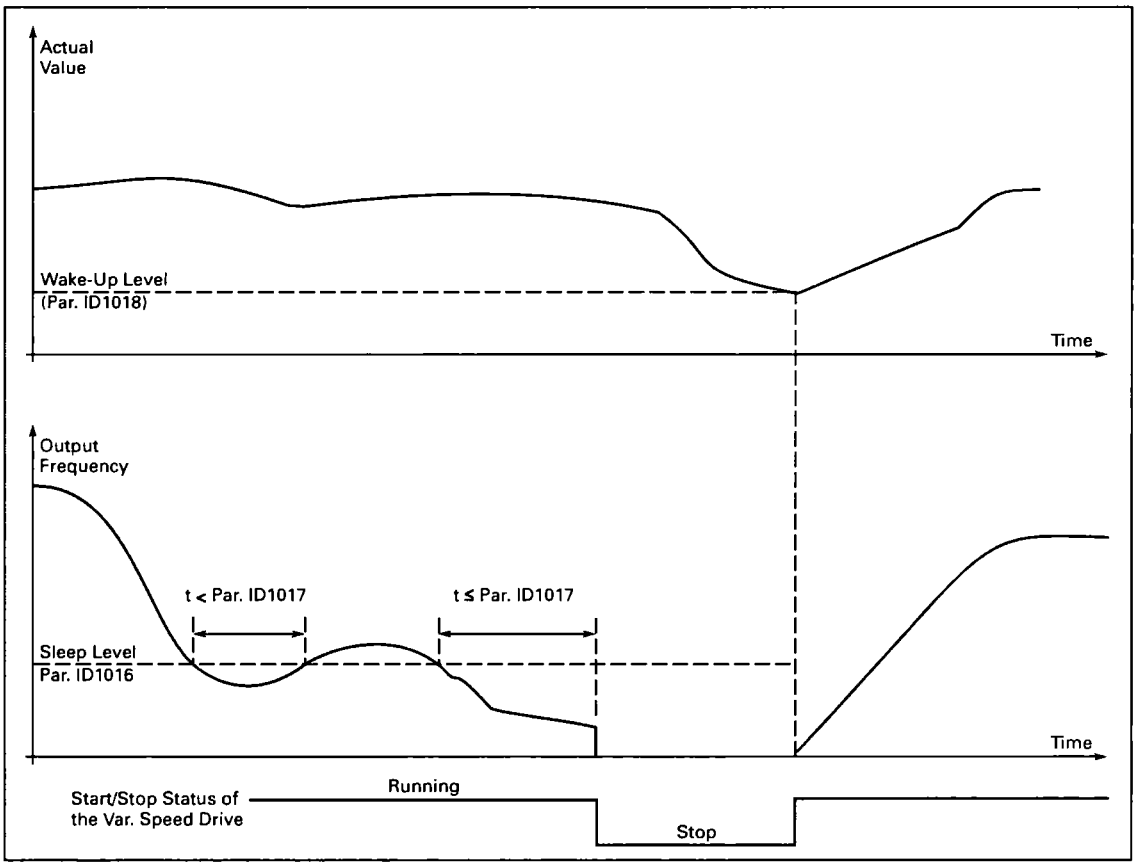

Figure 9-29: Sleep Function

Table 9-3: Selectable Wake-Up Functions

Parameter Value	Function	Limit	Description
0	Wake-up happens when actual value goes below the limit	The limit defined with parameter ID1018 is in percent of the maximum actual value	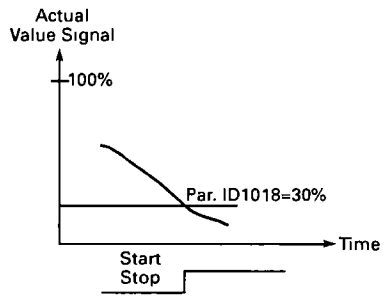
1	Wake-up happens when actual value exceeds the limit	The limit defined with parameter ID1018 is in percent of the maximum actual value	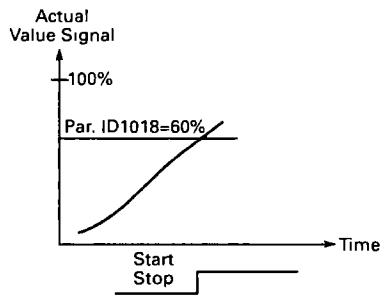
2	Wake-up happens when actual value goes below the limit	The limit defined with parameter ID1018 is in percent of the current value of the reference signal	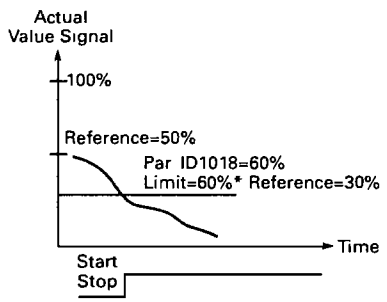
3	Wake-up happens when actual value exceeds the limit	The limit defined with parameter ID1018 is in percent of the current value of the reference signal	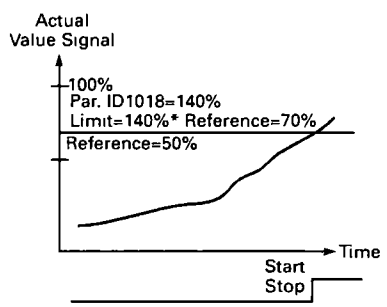

Pump and Fan Control

The Pump and Fan Control can be used to control one variable speed drive and up to three auxiliary drives. The PID controller of the drive controls the speed of the variable speed drive and gives control signals to start and stop the auxiliary drives to control the total flow. In addition to the eight parameter groups provided as standard, a parameter group for multi-pump and fan control functions is available.

Pump and Fan Control is used to control the operation of pumps and fans. The application utilizes external contactors for switching between the motors connected to the drive. The autochange feature provides the capability of changing the starting order of the auxiliary drives.

Short Description of PFC Function and Essential Parameters

Automatic Changing Between Drives (Autochange & Interlockings Selection, P2.10.4/ ID1027)

The automatic change of starting and stopping order is activated and applied to either the auxiliary drives only or the auxiliary drives and the drive controlled by the frequency converter depending on the setting of parameter 2.10.4.

The Autochange function allows the starting and stopping order of drives controlled by the pump and fan automatics to be changed at desired intervals. The drive controlled by frequency converter can also be included in the automatic changing and locking sequence (par 2.10.4). The Autochange function makes it possible to equalize the run times of the motors and to prevent, for example, pump stalls due to running breaks that are too long.

- Apply the Autochange function with parameter 2.10.4, Autochange.
- The autochange takes place when the time set with parameter 2.10.5 Autochange interval has expired and the capacity used is below the level defined with parameter 2.10.7, Autochange frequency limit.
- The running drives are stopped and re-started according to the new order.
- External contactors controlled through the relay outputs of the frequency converter connect the drives to the frequency converter or to the mains. If the motor controlled by the frequency converter is included in the autochange sequence, it is always controlled through the relay output activated first. The other relays activated later control the auxiliary drives.

This parameter is used to activate the interlock inputs (Values 3 & 4). The interlocking signals come from the motor switches. The signals (functions) are connected to digital inputs which are programmed as interlock inputs using the corresponding parameters. The pump and fan control automatics only control the motors with active interlock data.

- If the interlock of an auxiliary drive is inactivated and another unused auxiliary drive available, the latter will be put to use without stopping the frequency converter.
- If the interlock of the controlled drive is inactivated, all motors will be stopped and re-started with the new set-up.
- If the interlock is re-activated in Run status, the automatics will stop all motors immediately and re-start with a new setup. Example: [P1 → P3] → [P2 LOCKED] → [STOP] → [P1 → P2 → P3]

See **Page 9-41**, Examples.

Parameter 2.10.5/ID1029, Autochange interval

After expiration of the time defined with this parameter, the autochange function takes place if the capacity used lies below the level defined with parameters 2.10.7 (Autochange frequency limit) and 2.10.6 (Maximum number of auxiliary drives). Should the capacity exceed the value of par 2.10.7, the autochange will not take place before the capacity goes below this limit.

- The time count is activated only if the Start/Stop request is active.
- The time count is reset after the autochange has taken place or on removal of Start request

Parameters 2.10.6/ID1030, Maximum number of auxiliary drives and 2.10.7/ID1031, Autochange frequency limit

These parameters define the level below which the capacity used must remain so that the autochange can take place.

This level is defined as follows:

- If the number of running auxiliary drives is smaller than the value of parameter 2.10.6, the autochange function can take place.
- If the number of running auxiliary drives is equal to the value of parameter 2.10.6 and the frequency of the controlled drive is below the value of parameter 2.10.7, the autochange can take place.
- If the value of parameter 2.10.7 is 0.0 Hz, the autochange can take place only in rest position (Stop and Sleep), regardless of the value of parameter 2.10.6.

Examples

PFC with interlocks and autochange between 3 pumps (OPT-AA or OPT-B5 option board required)

Situation: 1 controlled drive and 2 auxiliary drives.
Parameter settings: 2.10.1 = 2

Interlock feedback signals used, autochange between all drives used.

Parameter settings: 2.10.4 = 4
DIN4 active (par. 2.2.6 = 0)

The interlock feedback signals come from the digital inputs DIN4 (AI1), DIN2 & DIN3 selected with parameters 2.1.17, 2.1.18 and 2.2.4.

The control of pump 1 (par. 2.3.1 = 17) is enabled through Interlock 1 (DIN2, 2.1.17 = 10), the control of pump 2 (par. 2.3.2 = 18) through Interlock 2 (DIN3, par. 2.1.18 = 13) and the control of pump 3 (par. 2.3.3 = 19) through Interlock 3 (DIN4).

Table 9-4: PFC-Control Input/Output Configuration with Three Pumps, MF4 – MF6 460V

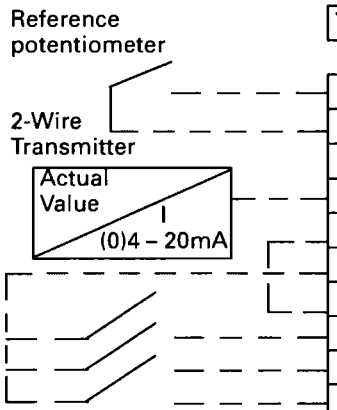

Terminal		Signal
1	$+10V_{ref}$	Reference output
2	AI1+	Voltage input frequency reference/DIN4
3	AI1-	I/O Ground
4	AI2+	PID Actual Value
5	AI2-	
6	+24V	Control voltage output
7	GND	I/O ground
8	DIN1	Start
9	DIN2	Interlock 1 (par 2.1.17 = 10)
10	DIN3	Interlock 2 (par 2.1.18 = 13)
11	GND	I/O ground
18	AO1+	Output frequency
19	AO1-	Analog output
A	RS 485	Serial bus
B	RS 485	Serial bus
21	RO1	Relay output 1 FAULT
22	RO1	
23	RO1	
OPT-B5		
22	RO1/1	Autochange 1 (Pump 1 Control), par 2.3.2 = 17
23	RO1/2	
25	RO2/1	Autochange 2 (Pump 2 Control), par 2.3.3 = 18
26	RO2/2	
28	RO3/1	Autochange 3 (Pump 3 Control), par 2.3.4 = 19
29	RO3/2	

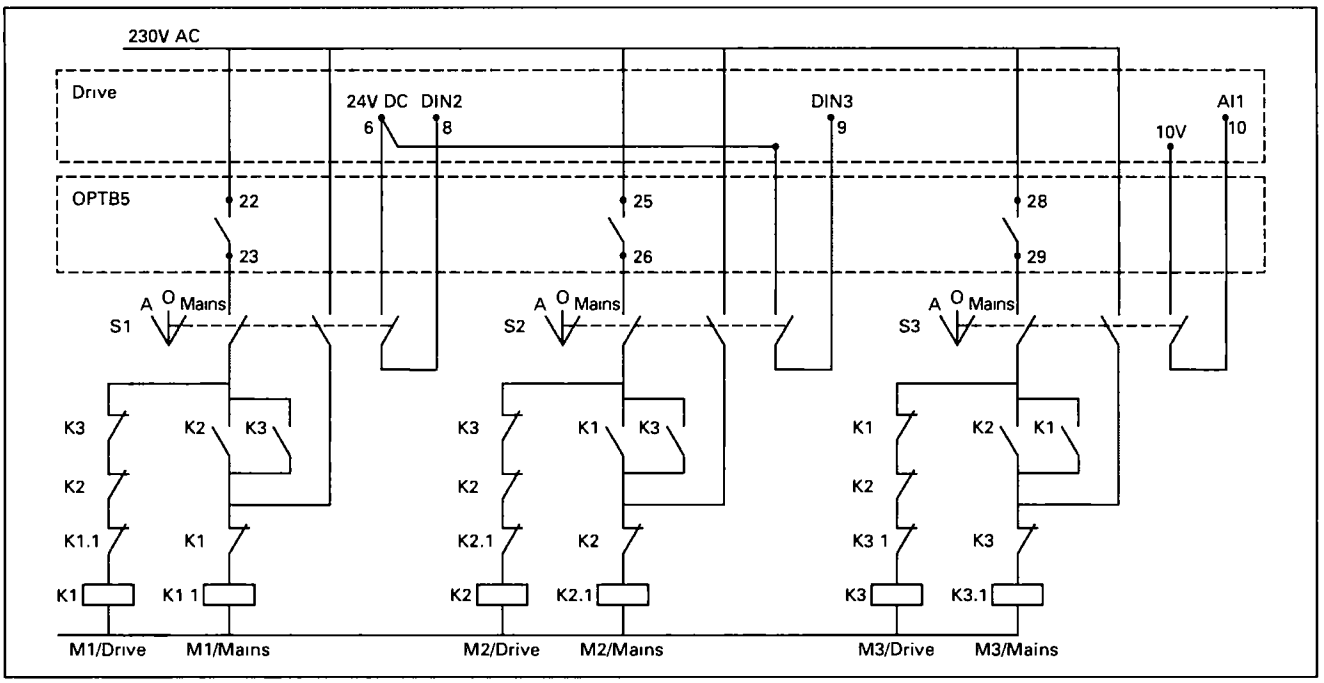

Figure 9-30: 3-Pump Autochange System, Principal Control Diagram

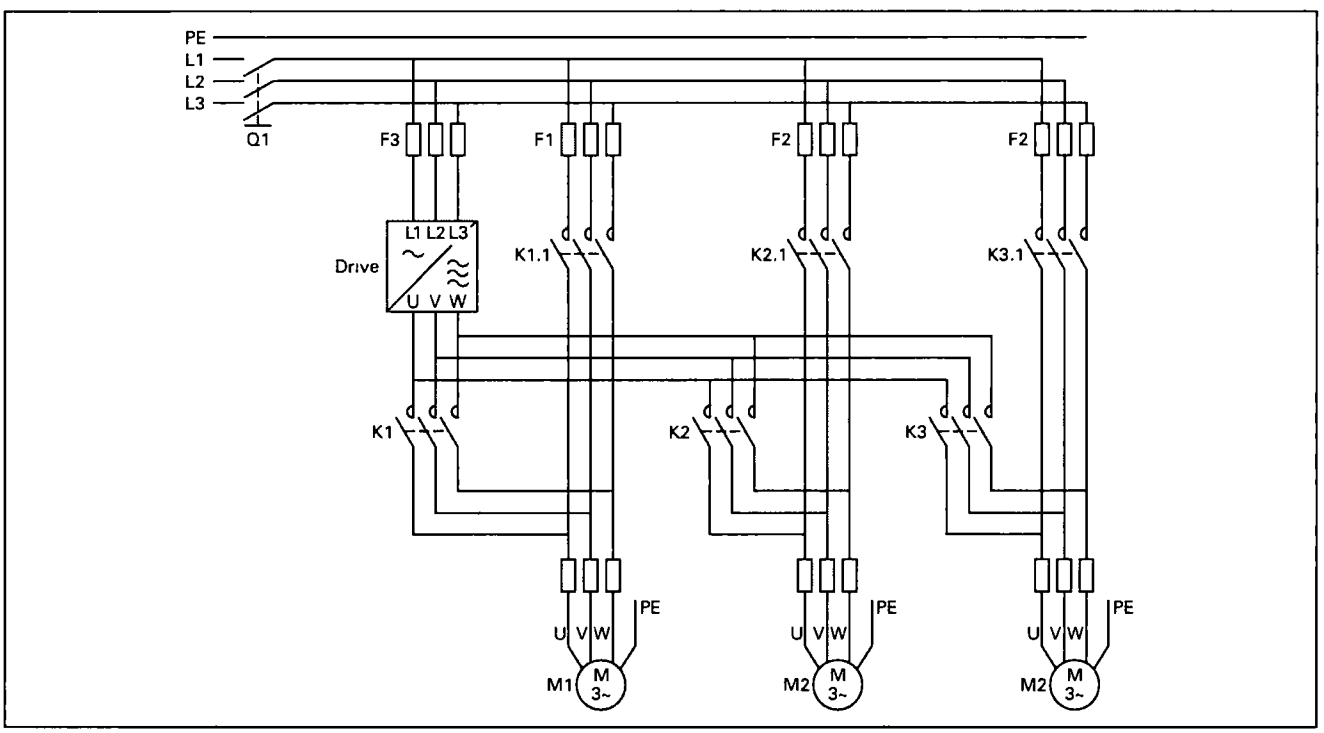

Figure 9-31: Example of 3-Pump Autochange, Main Diagram

PFC with interlocks and autochange between 2 pumps (OPTAA or OPTB5 option board required)

Situation: 1 controlled drive and 1 auxiliary drive.

Parameter settings: 2.10.1 = 1

Interlock feedback signals used, autochange between pumps used.

Parameter settings: 2.10.4 = 4

The interlock feedback signals come from the digital input DIN2 (par. 2.1.17) and digital input DIN3, (par. 2.1.18).

The control of pump 1 (par. 2.3.1 = 17) is enabled through Interlock 1 (DIN2, P2.1.17), the control of pump 2 (par. 2.3.2 = 18) through Interlock 2 (par. 2.1.18 = 13)

Table 9-5: PFC-Control Input/Output Configuration with Two Pumps, MF4 – MF6 460V

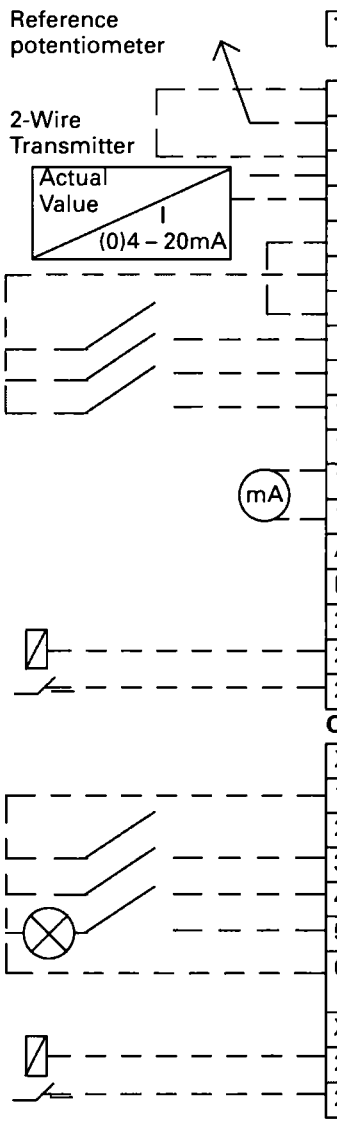

Terminal		Signal
1	+10V$_{ref}$	Reference output
2	AI1+	Voltage input frequency reference/DIN4
3	AI1-	I/O Ground
4	AI2+	PID Actual Value
5	AI2-	
6	+24V	Control voltage output
7	GND	I/O ground
8	DIN1	Start
9	DIN2	Interlock 1 (par 2.1.17 = 10)
10	DIN3	Interlock 2 (par 2.1.18 = 13)
11	GND	I/O ground
18	AO1+	Output frequency
19	AO1-	Analog output
A	RS 485	Serial bus
B	RS 485	Serial bus
21	RO1	Autochange 1 (Pump 1 control) par 2.3.1. = 17
22	RO1	
23	RO1	

OPT-AA

X1		
1	+24V	Control voltage output max. 150 mA
2	GND	Ground for controls, e.g for +24V and DO
3	DIN1	Preset speed 2, par 2.2.1 = 7
4	DIN2	Fault reset, par 2.2.2 = 4
5	DIN3	Disable PID (Freq reference from AI1), par 2.2.3 = 11
6	DO1	Ready, par 2.3.4 = 1 Open collector output, 50 mA/48V
X2		
22	RO1/NO	Autochange 2 (Pump 2 control), par 2.3.2 = 18
23	RO1/COM	

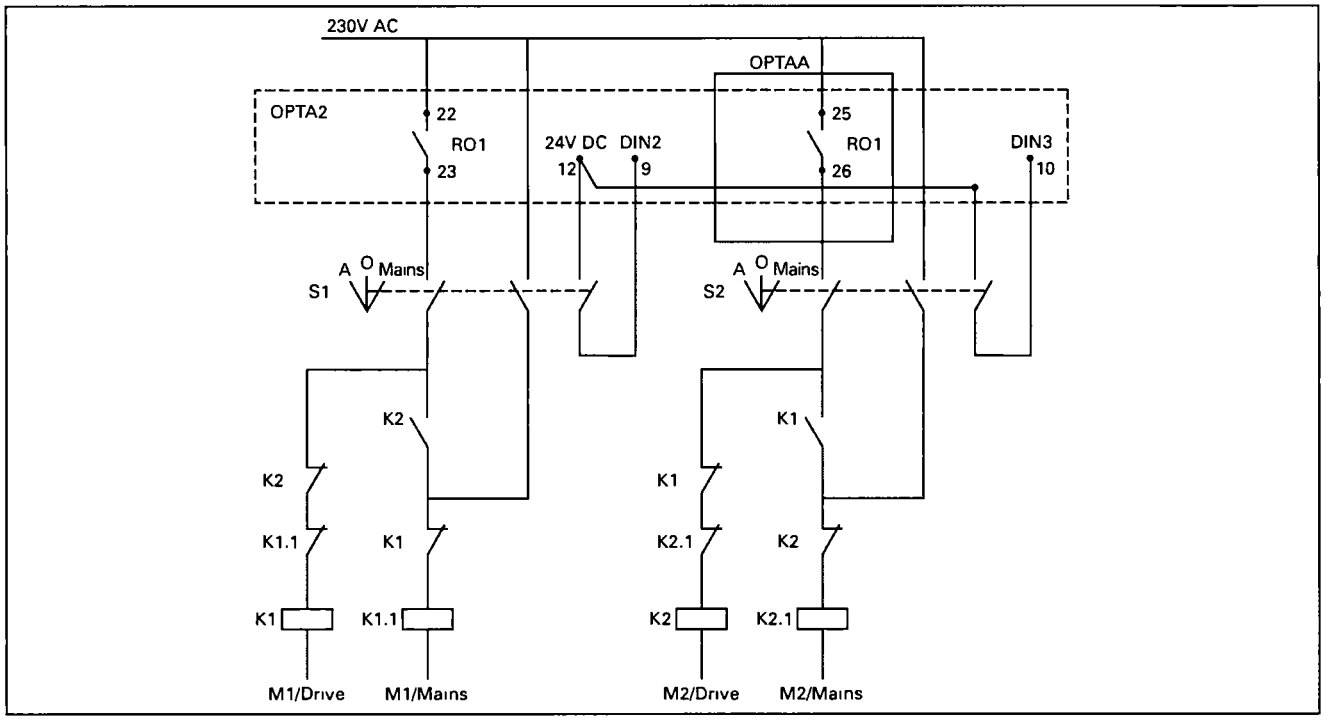

Figure 9-32: 2-Pump Autochange System, Principal Control Diagram

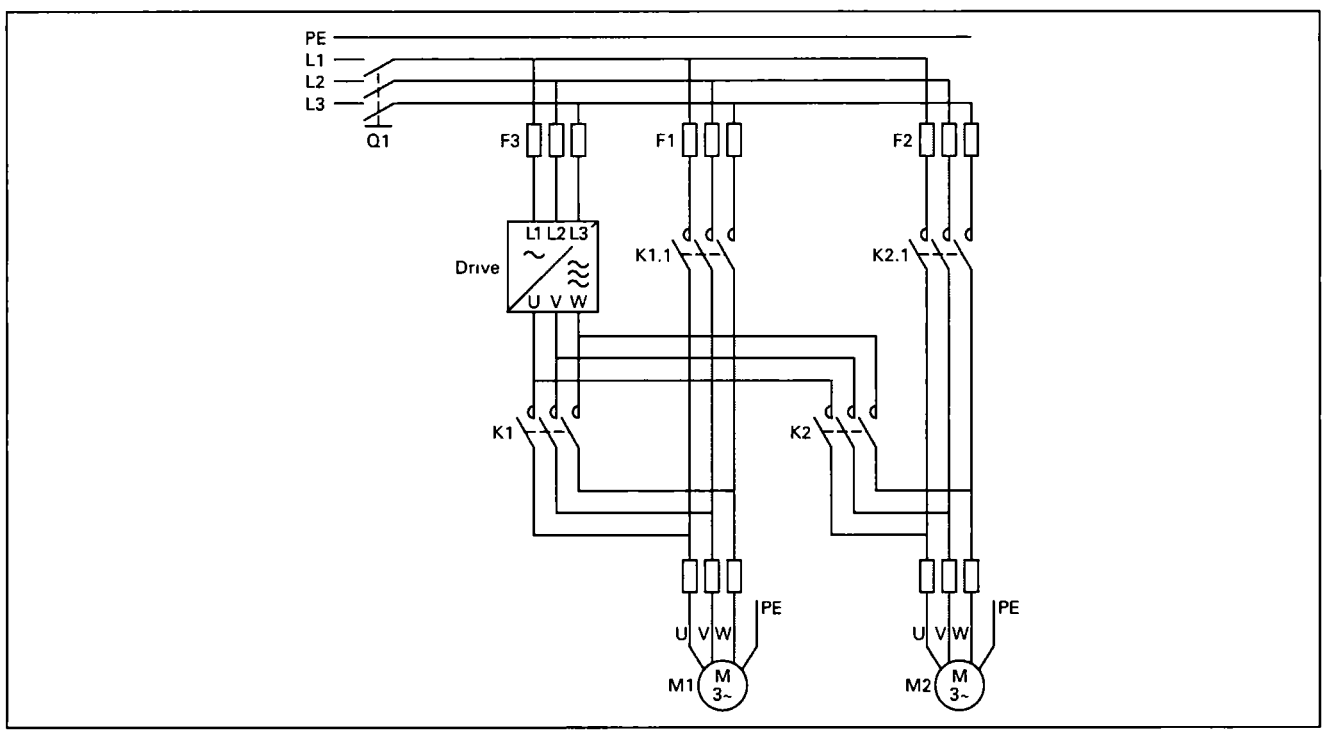

Figure 9-33: Example of 2-Pump Autochange, Main Diagram

Description of Pump and Fan Control Parameters

2.10.1 Number of auxiliary drives ID1001

With this parameter the number of auxiliary drives in use will be defined. The functions controlling the auxiliary drives (parameters 2.10.4 to 2.10.7) can be programmed to relay outputs.

2.10.2 Start delay of auxiliary drives ID1010

The frequency of the drive controlled by the drive must remain above the maximum frequency for the time defined with this parameter before the auxiliary drive is started. The delay defined applies to all auxiliary drives. This prevents unnecessary starts caused by momentary start limit exceedings.

2.10.3 Stop delay of auxiliary drives ID1011

The frequency of the drive controlled by the drive must remain below the minimum frequency for the time defined with this parameter before the drive is stopped. The delay defined applies to all auxiliary drives. This prevents unnecessary stops caused by momentary falls below the stop limit.

2.10.4 Automatic changing between drives ID1027

0 Not used

1 Autochange with aux pumps

This parameter allows you to invert the error value of the PID controller (and thus the operation of the PID controller).

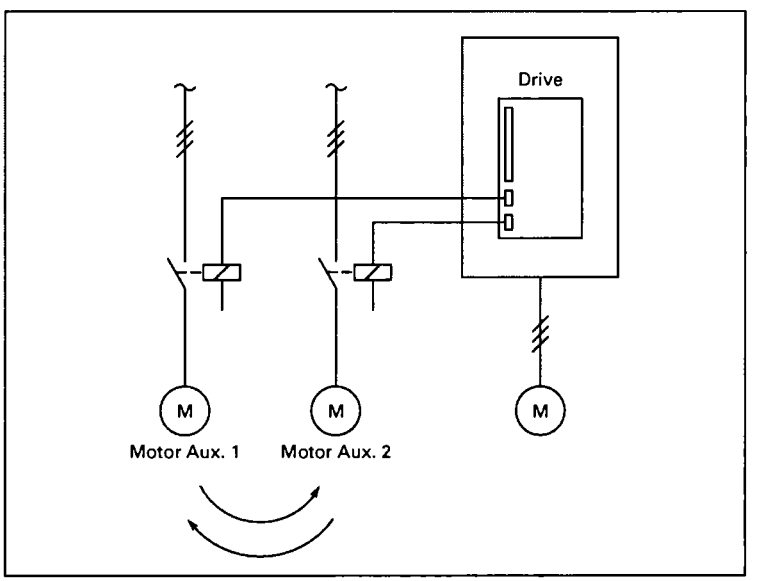

Figure 9-34: Autochange Applied to Auxiliary Drives Only

2 Autochange with drive and auxiliary pumps

The drive controlled by the drive is included in the automatics and a contactor is needed for each drive to connect it to either the mains or the drive.

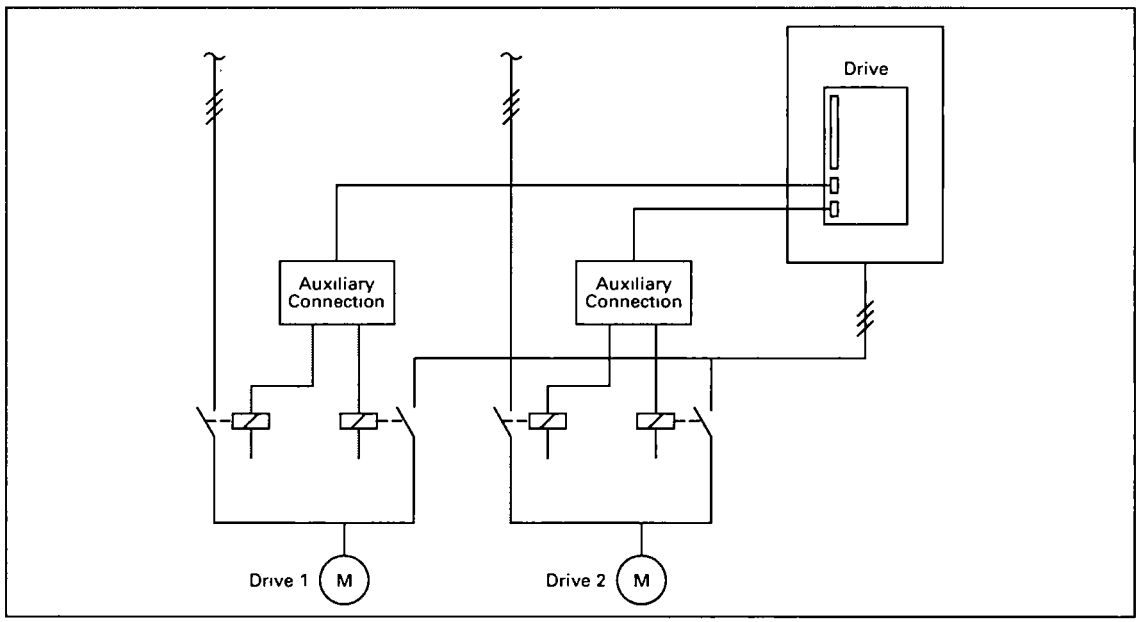

Figure 9-35: Autochange with All Drives

3 Autochange and interlocks (only auxiliary pumps)

The drive controlled by the drive is included in the automatics and a contactor is needed for each drive to connect it to either the mains or the drive.

4 Autochange and interlocks (Drive and aux pumps)

The drive controlled by the drive is included in the automatics and a contactor is needed for each drive to connect it to either the mains or the drive. DIN 1 is automatically intelocked for Autochange output 1. Interlocks for Autochange output 1, 2, 3 (or DIE1, 2, 3) can be selected with par. 2.1.17 and 2.1.18.

2.10.5 Autochange interval ID1029

After the time defined with this parameter, the autochange function takes place if the capacity used lies below the level defined with parameters 2.10.7 (Autochange frequency limit) and 2.10.6 (Maximum number of auxiliary drives). Should the capacity exceed the value of P2.10.7, the autochange will not take place before the capacity goes below this limit.

- The time count is activated only if the Start/Stop request is active. The time count is reset after the autochange has taken place or on removal of Start request.
- The time count is reset after the autochange has taken place or on removal of Start request.

2.10.6 Maximum number of auxiliary drives ID1030
2.10.7 Autochange frequency limit ID1031

These parameters define the level below which the capacity used must remain so that the autochange can take place.

This level is defined as follows:

- If the number of running auxiliary drives is smaller than the value of parameter 2.10.6, the autochange function can take place.
- If the number of running auxiliary drives is equal to the value of parameter 2.10.6 and the frequency of the controlled drive is below the value of parameter 2.10.7, the autochange can take place.
- If the value of parameter 2.10.7 is 0.0 Hz, the autochange can take place only in rest position (Stop and Sleep) regardless of the value of parameter 2.10.6.

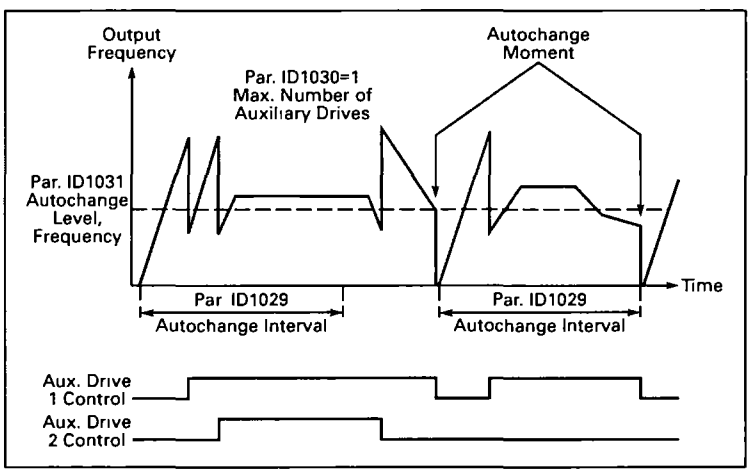

Figure 9-36: Autochange Interval and Limits

2.10.8 Start frequency, auxiliary drive 1 ID1002

The frequency of the drive controlled by the drive must exceed the limit defined with these parameters with 1 Hz before the auxiliary drive is started. The 1 Hz overdraft makes a hysteresis to avoid unnecessary starts and stops. See also parameters 2.1.1 and 2.1.2.

2.10.9 Stop frequency, auxiliary drive 1 ID1003

The frequency of the drive controlled by the drive must fall with 1Hz below the limit defined with these parameters before the auxiliary drive is stopped. The stop frequency limit also defines the frequency to which the frequency of the drive controlled by the drive is dropped after starting the auxiliary drive.

Keypad Control Parameters

P3.1 Control place

The active control place can be changed with this parameter. For more information, see **Page 5-10.**

R3.2 Keypad reference

The frequency reference can be adjusted from the keypad with this parameter. For more information, see **Page 5-11.**

P3.3 Keypad direction

This parameter allows you to invert the error value of the PID controller (and thus the operation of the PID controller).

0 Forward: The rotation of the motor is forward, when the keypad is the active control place.

1 Reverse: The rotation of the motor is reversed, when the keypad is the active control place.

For more information, see **Page 5-11.**

R3.4 Stop button activated

If you wish to make the Stop button a "hotspot" which always stops the drive regardless of the selected control place, give this parameter the value 1 (default). See **Page 5-11.**

See also parameter 3.1.

R3.5 PID reference 1

The PID controller keypad reference can be set between 0% and 100%. This reference value is the active PID reference if parameter 2.9.2 = 2.

R3.6 PID reference 2

The PID controller keypad reference 2 can be set between 0% and 100%. This reference is active if the DIN# function=12 and the DIN# contact is closed.

Control Signal Logic

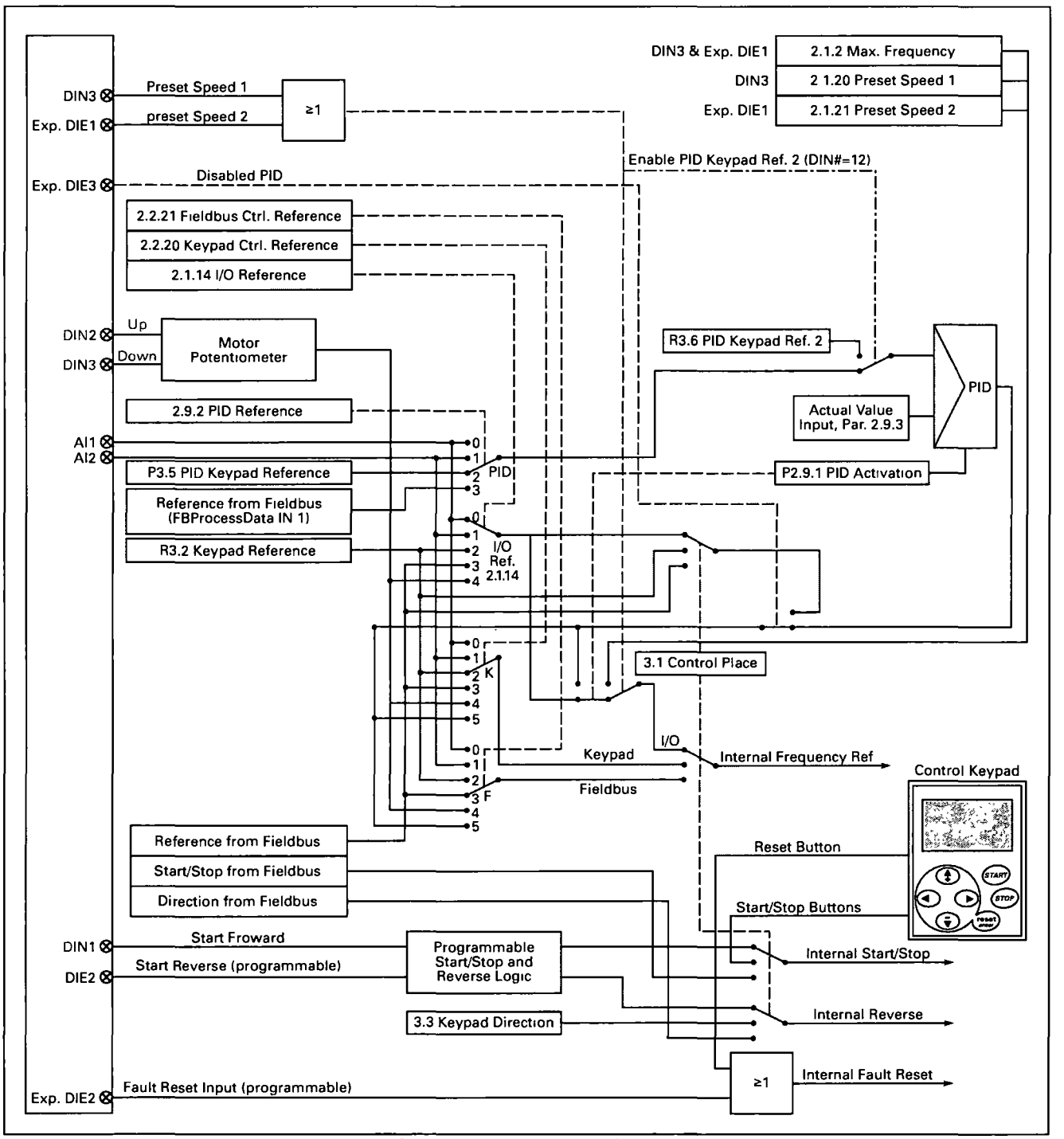

Figure 9-37: Control Signal Logic of the Multi-Control Application

January 2009

Appendix A — Fault Codes

When a fault is detected by the drive's control electronics, the drive is stopped and the symbol F together with the ordinal number of the fault, the fault code and a short fault description appear on the display. The fault can be reset with the RESET button on the control keypad or via the I/O terminal. The faults are stored in the Fault History Menu M5, which can be browsed. **Table A-1** contains all the fault codes.

Table A-1: Fault Codes

Fault Code	Fault	Possible Cause	Solution
1	Overcurrent	Drive has detected too high a current (>4xI_n) in the motor cable: • sudden heavy load increase • short circuit in motor cables • unsuitable motor	Check loading. Check motor. Check cables.
2	Overvoltage	The DC-link voltage has exceeded the limits defined in **Table 1-8**: • too short a deceleration time • high overvoltage spikes in supply	Set the deceleration time longer.
3	Ground Fault [1]	Current measurement has detected that the sum of motor phase currents is not zero. • insulation failure in cables or motor	Check motor cable and motor.
5	Charging Switch	The charging switch was open when the START command was been given due to: • faulty operation • component failure	Reset the fault and restart. Should the fault re-occur, contact your Cutler-Hammer distributor.
6	Emergency stop	An Emergency stop signal was received from one of the digital inputs	Determine the reason for the Emergency stop and remedy it.
7	Saturation trip	• defective component • motor or motor cable short	Cannot be reset from the keypad. Switch off power. If this fault appears simultaneously with Fault 1, check the motor and motor cables. IF THE PROBLEM IS NOT IN THE MOTOR OR ITS CABLES, DO NOT RE-CONNECT POWER! Contact your Cutler-Hammer distributor.
8	System fault	• component failure • faulty operation	Reset the fault and restart. Should the fault reoccur, contact your Cutler-Hammer distributor.

[1] Programmable.

Table A-1: Fault Codes (Continued)

Fault Code	Fault	Possible Cause	Solution
9	Undervoltage ①	DC-link voltage is under the voltage limits defined in • most probable cause: too low a supply voltage • drive internal fault	In case of temporary supply voltage break, reset the fault and restart the drive. Check the supply voltage. If it is adequate, an internal failure has occurred. Contact your Cutler-Hammer distributor.
10 ①	Input line supervision	Input line phase is low or missing.	Check the utility supply voltage, cables and connections.
11	Output phase supervision ②	Current measurement has detected that there is no current in one motor phase.	Check motor cable and motor.
13	Drive undertemperature	Heatsink temperature is under -10°C.	Provide supplemental heating, or relocate drive.
14	Drive overtemperature	Heatsink temperature is over 90°C. Overtemperature warning is issued when the heatsink temperature exceeds 85°C.	Check the correct amount and flow of cooling air. Check the heatsink for dust. Check the ambient temperature. Make sure that the switching frequency is not too high in relation to ambient temperature and motor load.
15	Motor stalled ①	Motor stall protection has tripped.	Check motor.
16	Motor overtemperature ①	• motor overheating has been detected by drive motor temperature model • motor is overloaded	Decrease the motor load. If no motor overload exists, check the temperature model parameters.
17	Motor underload ①	Motor underload protection has tripped.	
22	EEPROM checksum fault	Parameter save fault • faulty operation • component failure	Contact your Cutler-Hammer distributor.
24	Counter fault ②	Values displayed on counters are incorrect.	
25	Microprocessor watchdog fault	• faulty operation • component failure	Reset the fault and restart. Should the fault re-occur, contact your Cutler-Hammer distributor.
29	Thermistor fault ①	The thermistor input of option board has detected increase of the motor temperature.	Check motor cooling and loading. Check thermistor connection. (If thermistor input of the option board is not in use, it has to be short circuited.)
32	Fan cooling	The cooling fan did not start when commanded	Contact your Cutler-Hammer distributor.
34	Internal bus communication	Ambient interference or defective hardware	Should the fault re-occur, contact your Cutler-Hammer distributor.
35	Application fault	Selected application does not function	Contact your Cutler-Hammer distributor.

① Programmable.
② "A" faults only.

Table A-1: Fault Codes (Continued)

Fault Code	Fault	Possible Cause	Solution
39	Device removed ②	• option board removed • drive removed	Reset
40	Device unknown	Unknown option board or drive.	Contact your Cutler-Hammer distributor.
41	IGBT temperature	IGBT Inverter Bridge overtemperature protection has detected too high a motor current.	Check loading. Check motor size.
44	Device change ②	• option board changed • option board has default settings	Reset.
45	Device added ②	• option board changed • option board has default settings	Reset.
50	Analog input I_{in} <4 mA (selected signal range 4 to 20 mA) ①	Current at the analog input is < 4 mA. • control cable is broken or loose • signal source has failed.	Check the current loop circuitry.
51	External fault	Digital input failed. Digital input has been programmed as external fault input and this input is active.	Check the programming and the device indicated by the external fault information. Check also the cabling of this device.
52	Keypad communication fault	The connection between the control keypad and the drive is broken.	Check the keypad connection and keypad cable.
53	Fieldbus fault ①	The data connection between the fieldbus master and the fieldbus board is broken.	Check installation. If installation is correct contact your Cutler-Hammer distributor.
54	Slot fault ①	Defective option board or slot.	Check that the board is properly installed and seated in slot. If the installation is correct, contact your Cutler-Hammer distributor.
55	Actual value supervision ①	Actual value has exceeded or fallen below (depending on para. 2.7.22) the actual value supervision limit (para. 2.7.23)	

① Programmable.
② "A" faults only.

January 2009

Appendix B — Expander Board OPTAA

Description of Expander Board OPTAA

Description: I/O expander board with one relay output, one open collector output and three digital inputs.

Allowed slots: SLX9000 board slot E

Type ID: 16705

Terminals: Two terminal blocks; screw terminals (M2.6 and M3); no coding

Jumpers: None

Board parameters: None

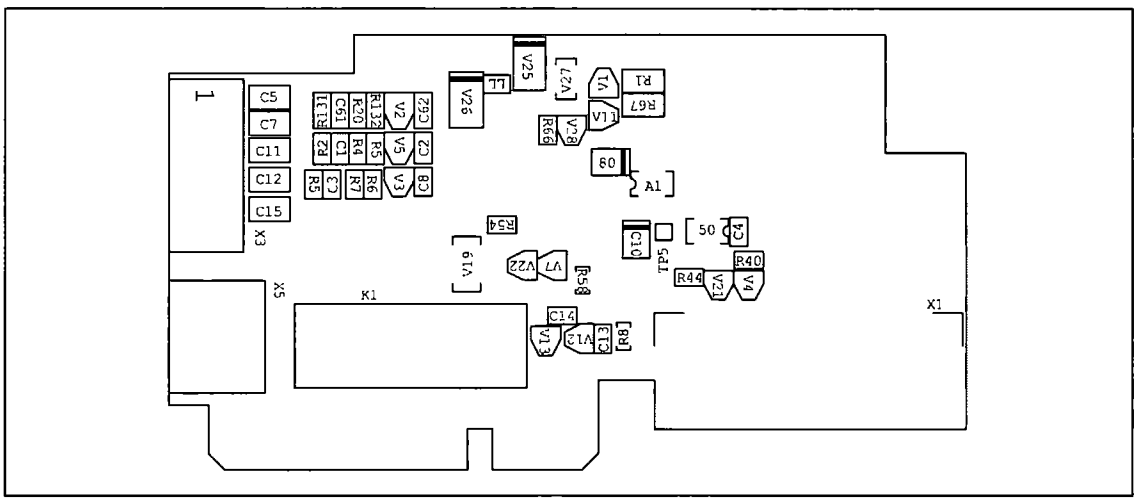

Figure B-1: Expander Board OPTAA

I/O Terminals on OPTAA

Table B-1: I/O Terminals of Board OPTAA

Terminal		Parameter Setting	Description
X3			
1	+24V		Control voltage output; voltage for switches etc., max. 150 mA
2	GND		Ground for controls, e.g. for +24V and DO
3	DIN1	DIGIN:x.1	Digital input 1
4	DIN2	DIGIN:x.2	Digital input 2
5	DIN3	DIGIN:x.3	Digital input 3
6	DO1	DIOUT:x.1	Open collector output, 50 mA/48V
X5			
24	RO1/NC	DIOUT:x.2	Relay output 1 (NO) Switching capacity: 24V DC/8A 250V AC/8A 125V DC/.4A
25	RO1/C		
26	RO1/NO		

Note: The +24V control voltage terminal can also be used to power the control module (but not the power module).

January 2009

Appendix C — Expander Board OPTAI

Description of Expander Board OPTAI

Description: I/O expander board with one relay output (NO), three digital inputs and one thermistor input for SLX9000 drives.

Allowed slots: SLX9000 board slot E

Type ID: 16713

Terminals: Two terminal blocks; screw terminals; no coding

Jumpers: None

Board parameters: None

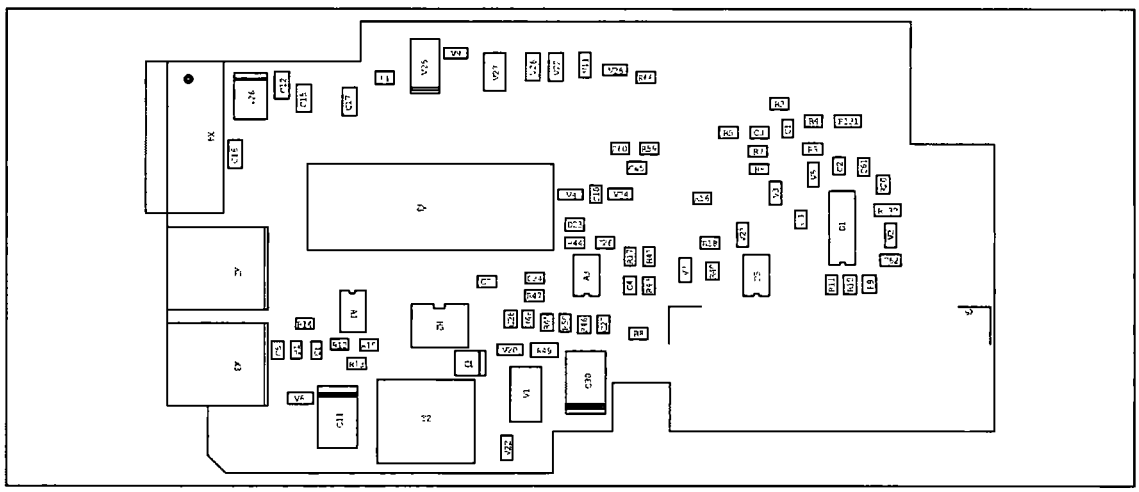

Figure C-1: Expander Board OPTAI

I/O Terminals on OPTAI

Table C-1: I/O Terminals of Board OPTAI

Terminal		Parameter Setting	Description
X4			
12	+24V		Control voltage output; voltage for switches etc., max. 150 mA
13	GND		Ground for controls, e.g. for +24V and DO
14	DIN1	DIGIN:B.1	Digital input 1
15	DIN2	DIGIN:B.2	Digital input 2
16	DIN3	DIGIN:B.3	Digital input 3
X2			
24	RO1/ Common	DIOUT:B.1	Relay output 1 (NO) Switching capacity: 24V DC/8A 250V AC/8A 125V DC/.4A
25	RO1/Normal Open		
X3			
28	TI+	DIGIN:B.4	Thermistor input; Rtrip = 4.7 kΩ (PTC)
29	TI-		

Note: The +24V control voltage terminal can also be used to power the control module (but not the power module).

January 2009

Appendix D — Option Board Kits

230V, FR7 – FR8 460V and 575V Drives

The factory installed standard board configuration includes an A9 I/O board and an A2 relay output board, which are installed in slots A and B.

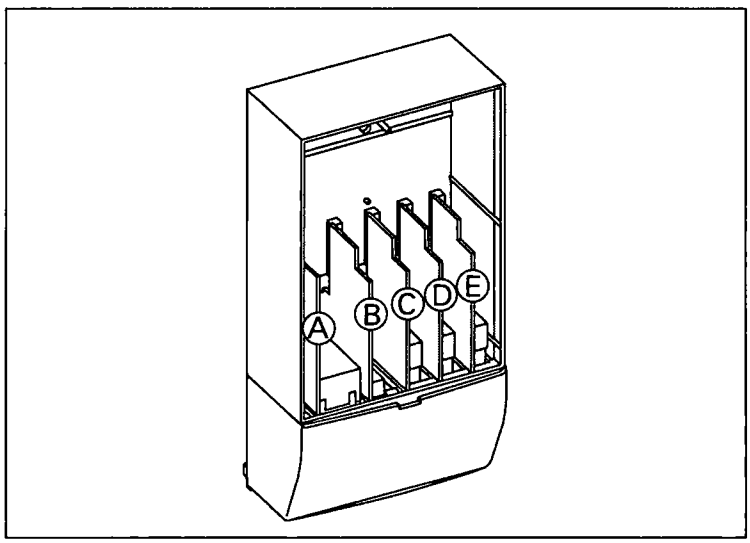

Figure D-1: Option Boards

Table D-1: Option Board Kits

Option Kit Description ②	Allowed Slot Locations ①	Field Installed	Factory Installed	9000X Ready Programs						
		Catalog Number	Option Designator	Basic	Local/ Remote	Standard	MSS	PID	Multi-P.	PFC
Standard I/O Cards (See Figure D-1)										
2 RO (NC/NO)	B	**OPTA2**	—	X	X	X	X	X	X	X
6 DI, 1 DO, 2 AI, 1AO, 1 +10V DC ref, 2 ext +24V DC/ EXT +24V DC	A	**OPTA9**	—	X	X	X	X	X	X	X
Extended I/O Card Options										
2 RO, Therm	B	**OPTA3**	**A3**	—	X	X	X	X	X	X
Encoder low volt +5V/15V24V	C	**OPTA4**	**A4**	—	X	X	X	X	X	X
Encoder high volt +15V/24V	C	**OPTA5**	**A5**	—	X	X	X	X	X	X
Double encoder — SPX Only	C	**OPTA7**	**A7**	X	X	X	X	X	X	X
6 DI, 1 DO, 2 AI, 1 AO	A	**OPTA8**	**A8**	—	X	X	X	X	X	X
3 DI (Encoder 10 – 24V), Out +15V/+24V, 2 DO (pulse+direction) — SPX Only	C	**OPTAE**	**AE**	X	X	X	X	X	X	X

① Option card must be installed in one of the slots listed for that card. Slot indicated in Bold is the preferred location.
② AI = Analog Input; AO = Analog Output, DI = Digital Input, DO = Digital Output, RO = Relay Output

Table D-1: Option Board Kits (Continued)

Option Kit Description ②	Allowed Slot Locations ①	Field Installed Catalog Number	Factory Installed Option Designator	9000X Ready Programs Basic	Local/ Remote	Standard	MSS	PID	Multi-P.	PFC
Extended I/O Card Options (Continued)										
6 DI, 1 ext +24V DC/EXT +24V DC	B, C, **D**, E	**OPTB1**	**B1**	—	—	—	—	—	X	X
1 RO (NC/NO), 1 RO (NO), 1 Therm	B, C, **D**, E	**OPTB2**	**B2**	—	—	—	—	—	X	X
1 AI (mA isolated), 2 AO (mA isolated), 1 ext +24V DC/ EXT +24V DC	B, C, **D**, E	**OPTB4**	**B4**	—	X	X	X	X	X	X
3 RO (NO)	B, C, **D**, E	**OPTB5**	**B5**	—	—	—	—	—	X	X
1 ext +24V DC/EXT +24V DC, 3 Pt100	B, C, **D**, E	**OPTB8**	**B8**	—	—	—	—	—	—	—
1 RO (NO), 5 DI 42 – 240V AC Input	B,C, **D**, E	**OPTB9**	**B9**	—	—	—	—	—	X	X
SPI, Absolute Encoder	C	**OPTBB**	**BB**	—	—	—	—	—	—	—

① Option card must be installed in one of the slots listed for that card Slot indicated in Bold is the preferred location.
② AI = Analog Input; AO = Analog Output, DI = Digital Input, DO = Digital Output, RO = Relay Output

Eaton Corporation is a diversified power management company ranked among the largest Fortune 500 companies. The electrical group is Eaton's largest division and is a global leader in electrical control, power distribution, power quality, automation, and monitoring products and services. Eaton's global electrical brands, including Cutler-Hammer®, MGE Office Protection Systems™, Powerware®, Holec®, MEM®, Santak and Moeller, provide customer-driven PowerChain Management® solutions to serve the power system needs of the industrial, institutional, government, utility, commercial, residential, IT, mission critical and OEM markets worldwide

PowerChain Management solutions help enterprises achieve sustainable and competitive advantages through proactive management of the power system as a strategic, integrated asset throughout its life cycle With Eaton's distribution, generation and power quality equipment; full-scale engineering services; and information management systems, the power system is positioned to deliver powerful results· greater reliability, operating cost efficiencies, effective use of capital, enhanced safety, and risk mitigation.

EATON
Powering Business Worldwide

Eaton Corporation
Electrical Group
1000 Cherrington Parkway
Moon Township, PA 15108
United States
877-ETN-CARE (877-386-2273)
Eaton com

© 2009 Eaton Corporation
All Rights Reserved
Printed in USA
Publication No MN04003020E / Z7932
January 2009

PowerChain Management®

PowerChain Management is a registered trademark of Eaton Corporation

All other trademarks are property of their respective owners

EATON | Cutler-Hammer

NEMA 12 Conversion Kit for 9000X Adjustable Frequency Drive

Installation Manual

New Information
January 2004

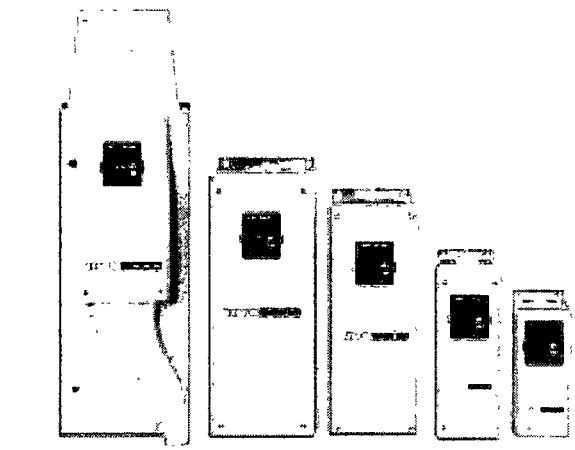

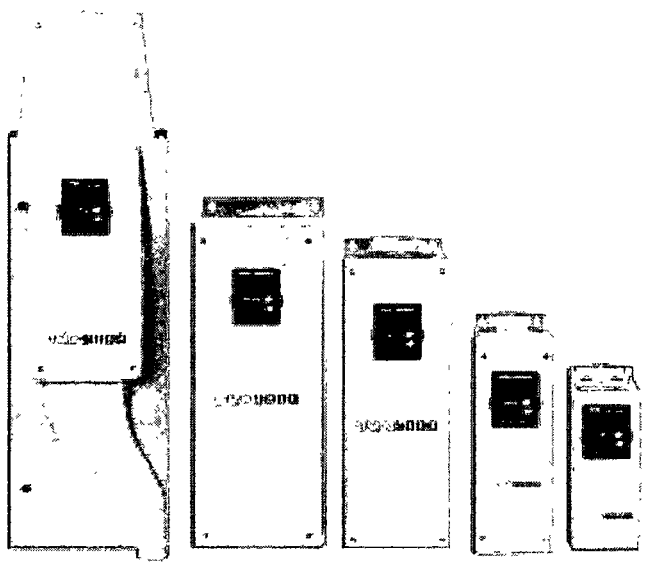

January 2004

Important Notice – Please Read

The product discussed in this literature is subject to terms and conditions outlined in Eaton Electrical Inc. selling policies. The sole source governing the rights and remedies of any purchaser of this equipment is the relevant Eaton Electrical Inc. selling policy.

NO WARRANTIES, EXPRESS OR IMPLIED, INCLUDING WARRANTIES OF FITNESS FOR A PARTICULAR PURPOSE OR MERCHANTABILITY, OR WARRANTIES ARISING FROM COURSE OF DEALING OR USAGE OF TRADE, ARE MADE REGARDING THE INFORMATION, RECOMMENDATIONS AND DESCRIPTIONS CONTAINED HEREIN. In no event will Eaton Electrical Inc. be responsible to the purchaser or user in contract, in tort (including negligence), strict liability or otherwise for any special, indirect, incidental or consequential damage or loss whatsoever, including but not limited to damage or loss of use of equipment, plant or power system, cost of capital, loss of power, additional expenses in the use of existing power facilities, or claims against the purchaser or user by its customers resulting from the use of the information, recommendations and descriptions contained herein.

The information contained in this manual is subject to change without notice.

Cover Photo: Cutler-Hammer® 9000X Drives

January 2004

Table of Contents

SAFETY
Definitions and Symbols iii
Hazardous High Voltage iii
CHAPTER 1 — General 1-1
CHAPTER 2 — Contents of Kits
OPTN12FR4 (Frame 4) and OPTN12FR5 (Frame 5) 2-1
OPTN12FR6 (Frame 6) 2-2
CHAPTER 3 — Installation
Installation Instructions for Frame 4 3-1
Installation Instructions for Frame 5 3-4
Installation Instructions for Frame 6 3-7
CHAPTER 4 — Specifications 4-1

List of Figures

Figure 2-1: Contents of NEMA Type 12 Kit for OPTN12FR4 and OPTN12FR5 2-1
Figure 2-2: Contents of NEMA Type 12 Kit for OPTN12FR6 2-2

List of Tables

Table 3-1: Instructions for NEMA Type 12 Kit Installation — Frame 4 3-1
Table 3-2: Instructions for NEMA Type 12 Kit Installation — Frame 5 3-4
Table 3-3: Instructions for NEMA Type 12 Kit Installation — Frame 6 3-7
Table 4-1: NEMA Type 12 Kit — Dimensions and Weight 4-1

January 2004

Safety

Definitions and Symbols

⚠ WARNING

This symbol indicates high voltage. It calls your attention to items or operations that could be dangerous to you and other persons operating this equipment. Read the message and follow the instructions carefully.

⚠

This symbol is the "Safety Alert Symbol." It occurs with either of two signal words: CAUTION or WARNING, as described below.

⚠ WARNING

Indicates a potentially hazardous situation which, if not avoided, can result in serious injury or death.

⚠ CAUTION

Indicates a potentially hazardous situation which, if not avoided, can result in minor to moderate injury, or serious damage to the product. The situation described in the CAUTION may, if not avoided, lead to serious results. Important safety measures are described in CAUTION (as well as WARNING).

Hazardous High Voltage

⚠ WARNING

Motor control equipment and electronic controllers are connected to hazardous line voltages. When servicing drives and electronic controllers, there may be exposed components with housings or protrusions at or above line potential. Extreme care should be taken to protect against shock.

Stand on an insulating pad and make it a habit to use only one hand when checking components. Always work with another person in case an emergency occurs. Disconnect power before checking controllers or performing maintenance. Be sure equipment is properly grounded. Wear safety glasses whenever working on electronic controllers or rotating machinery.

⚠ WARNING

After disconnecting the utility, wait until the unit cooling fan stops and the indicators on the control panel are extinguished (if no keypad is present, check the indicators in the cover). Wait five more minutes before doing any work on the connections. Do not open the cover before this time has run out.

January 2004

January 2004

Chapter 1 — General

The NEMA Type 12 Kit is used to convert a Cutler-Hammer® 9000X drive by Eaton Electrical® from a NEMA Type 1 to a NEMA Type 12 enclosure. A NEMA Type 12 enclosure may be necessary when the adjustable frequency drive is used in ambient conditions that may contain moisture or dust.

According to standard IEC 60529 (EN 60 529), the NEMA Type 12 adjustable frequency drives enclosure provides protection against dust and water sprayed from all directions. Limited ingress of both is permitted.

Note: A NEMA Type 12 enclosure does not protect the adjustable frequency drive against strong jets of water or against the effects of immersion.

January 2004

January 2004

Chapter 2 — Contents of Kits

OPTN12FR4 (Frame 4) and OPTN12FR5 (Frame 5)

The contents of the NEMA Type 12 Kits for Frames 4 and 5 are shown in **Figure 2-1.**

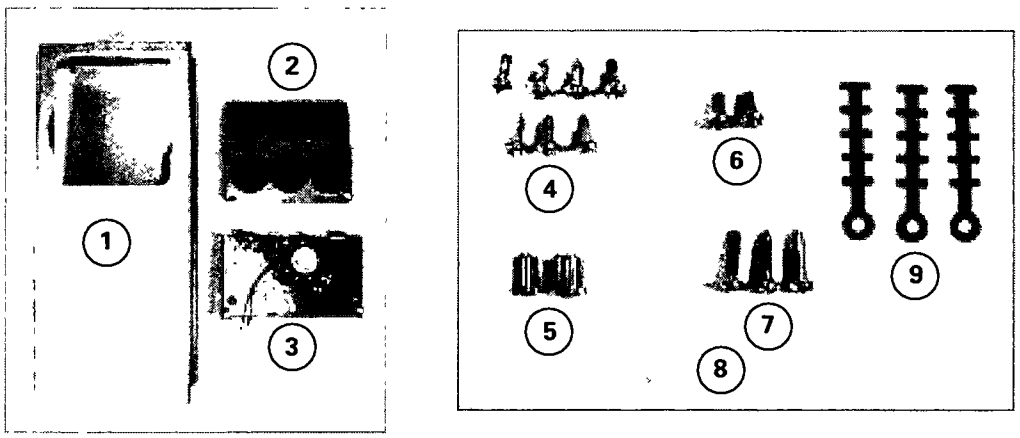

Components

1. NEMA 12 Enclosure
2. Removable Conduit Plate
3. NEMA 12 Cable Cover with Auxiliary Fan
4. Screws (M4x10)
5. Grounding Terminals
6. Screws (M4x8)
7. Screws (M4x16)
8. Caution Label
9. Control Cable Entry Clamps

Figure 2-1: Contents of NEMA Type 12 Kit for OPTN12FR4 and OPTN12FR5

OPTN12FR6 (Frame 6)

The contents of the NEMA Type 12 Kit for Frame 6 is shown in **Figure 2-2.**

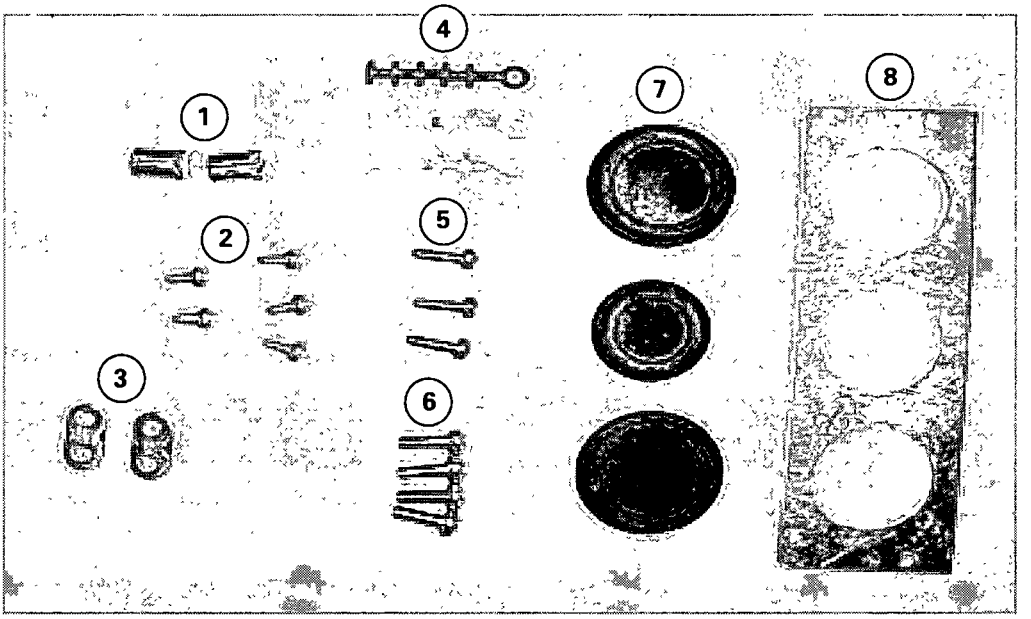

Components

1. Grounding Terminals
2. Screws, M4x10
3. Grounding Cable Clamps
4. Cable Clamps
5. Screws, M4x16
6. Grounding Screws M5x16
7. Rubber Grommets (sizes vary from class to class)
8. Cable Entry Flange

Figure 2-2: Contents of NEMA Type 12 Kit for OPTN12FR6

January 2004

Chapter 3 — Installation

Installation Instructions for Frame 4

⚠ WARNING

After disconnecting the utility, wait until the unit cooling fan stops and the indicators on the control panel are extinguished (if no keypad is present, check the indicators in the cover). Wait five more minutes before doing any work on the connections. Do not open the cover before this time has run out.

Table 3-1: Instructions for NEMA Type 12 Kit Installation — Frame 4

Step	Procedure
1	Detach the fan carefully by pushing into the connector on the side. 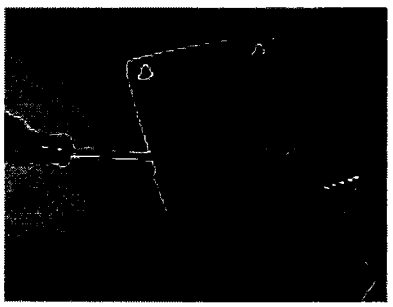
2	Insert the plastic sealing that is shown next to the hole. 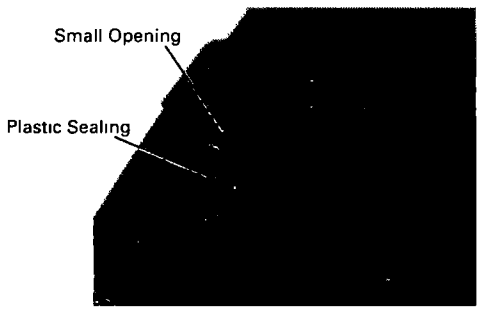
3	Re-install the fan ensuring that the connector clip fits accurately. 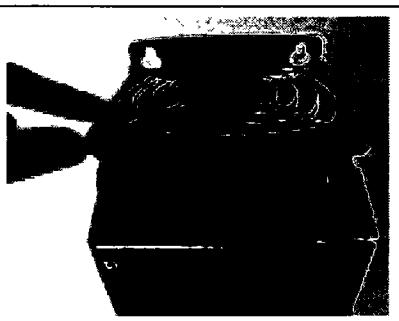

Table 3-1: Instructions for NEMA Type 12 Kit Installation — Frame 4, continued

Step	Procedure	
4	Remove the cover of the control.	
5	Open the control cable cover and remove the cable cover and detach the grounding rack.	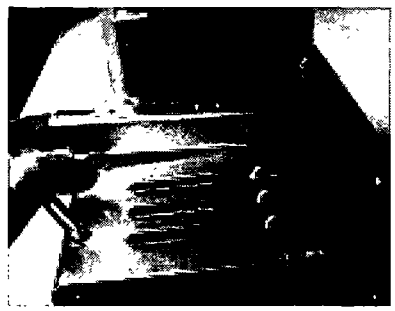
6	Close the cable entry with the grounding lugs.	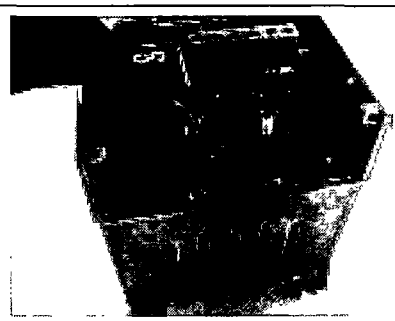
7	Attach the cable cover with fan #2.	

Table 3-1: Instructions for NEMA Type 12 Kit Installation — Frame 4, continued

Step	Procedure	
8	Connect the red wire into terminal 6 and the black wire into terminal 7.	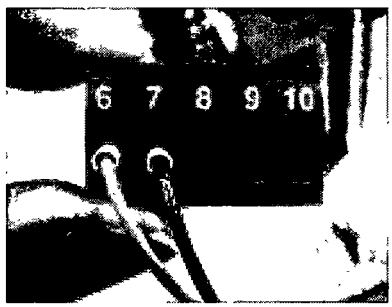
9	Re-install the grounding rack with cable clamps mounted using (M4x16) screws next to fan (#2).	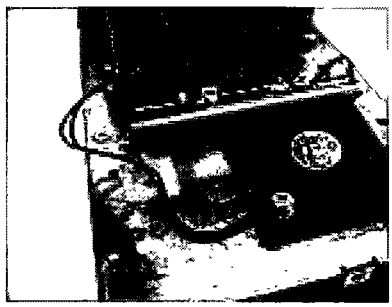
10	Install the NEMA 12 conduit plate on the base of the drive.	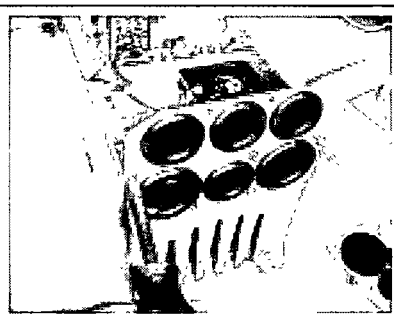
11	Tightly screw in the enclosure using the attached screws.	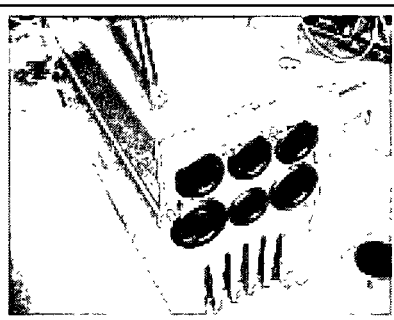

Installation Instructions for Frame 5

⚠ WARNING

After disconnecting the utility, wait until the unit cooling fan stops and the indicators on the control panel are extinguished (if no keypad is present, check the indicators in the cover). Wait five more minutes before doing any work on the connections. Do not open the cover before this time has run out.

Table 3-2: Instructions for NEMA Type 12 Kit Installation — Frame 5

Step	Procedure	
1	Remove the cover of the AF Drive.	
2	Open the small lid on the power unit cover, and leave the opening uncovered.	
3	Detach the fan carefully by pushing into the connector on the side.	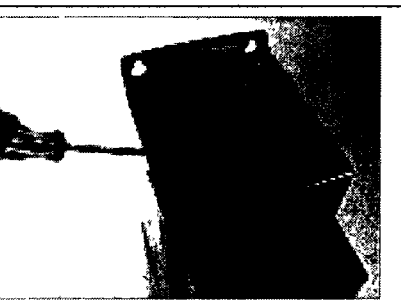

Table 3-2: Instructions for NEMA Type 12 Kit Installation — Frame 5, continued

Step	Procedure	
4	Insert the rubber sealing as shown for FR5.	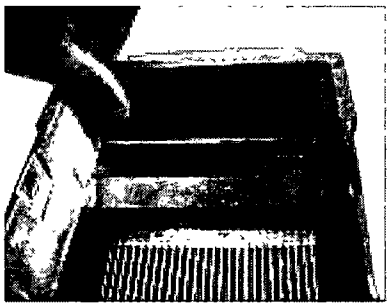
5	Re-install the fan ensuring that the connector clip fits accurately. Do not force.	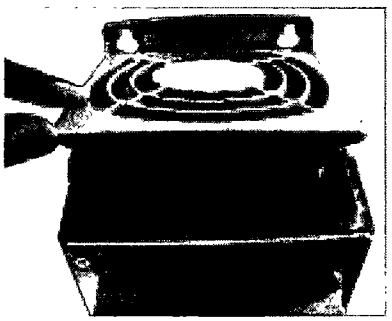
6	Open the control cable cover, remove the cable cover, and detach the grounding rack.	
7	Close the cable entry with the screws provided.	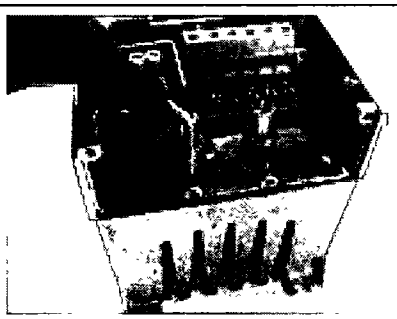

Table 3-2: Instructions for NEMA Type 12 Kit Installation — Frame 5, continued

Step	Procedure	
8	Attach the #2 cooling fan to the NEMA Type 12 power cable cover.	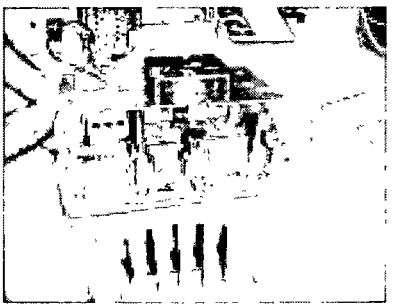
9	Connect the red wire into terminal 6 and the black into terminal 7.	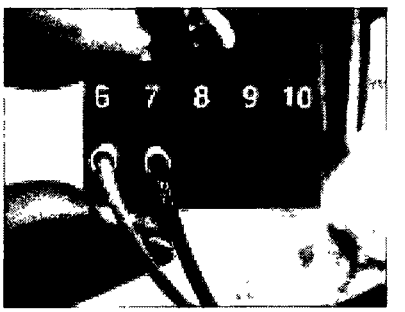
10	Re-install the grounding rack with cable clamps mounted using (M4x16) screws next to fan (#2).	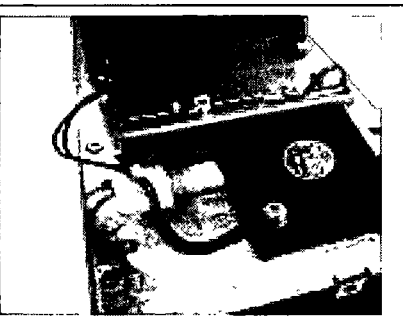
11	Install the NEMA 12 cable entry flange on the base of the drive.	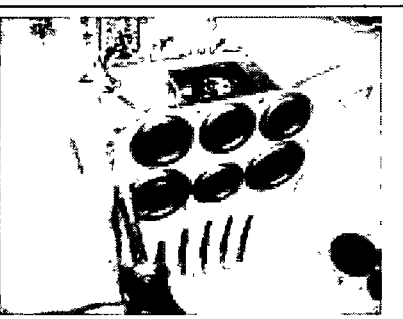

January 2004

Installation Instructions for Frame 6

Table 3-3: Instructions for NEMA Type 12 Kit Installation — Frame 6

Step	Procedure	
1	Remove the cover of the AF Drive.	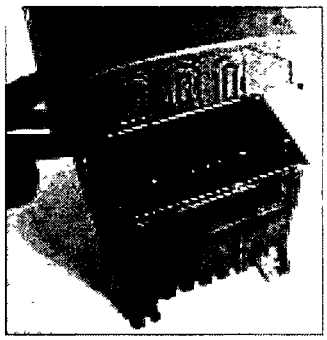
2	Remove the cable cover and screw the grounding cable clamps into place.	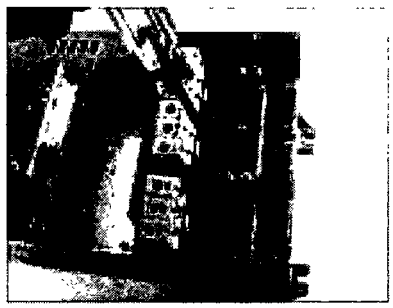
3	Re-install the cable cover.	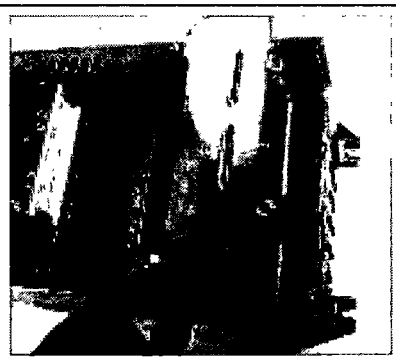
4	Mount the cable clamps on the grounding rack with the three M4x16 screws.	

Table 3-3: Instructions for NEMA Type 12 Kit Installation — Frame 6, continued

Step	Procedure	
5	Open the small lid on the power unit cover, and set the screw aside for later use.	
6	Seal the air inlets with the rubber sealing that comes with the kit.	
7	Mount the fan as shown over the closed inlets, and use screws from Step 5.	
8	Connect the red wire into terminal #6 and the black into terminal #7.	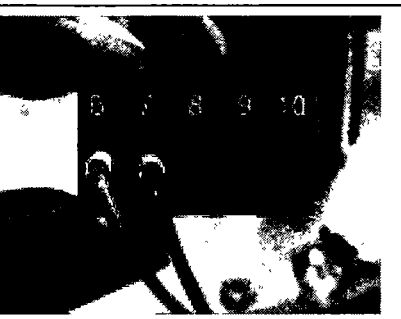

Table 3-3: Instructions for NEMA Type 12 Kit Installation — Frame 6, continued

Step	Procedure	
9	Route wiring as shown in the picture at right.	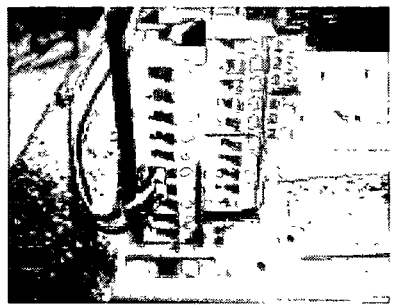
10	Install the NEMA Type 12 cable entry flange on the base of the drive.	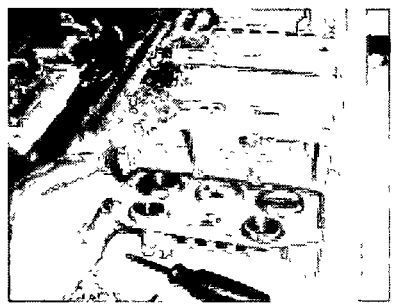
11	Cover the adjustable frequency drive with the NEMA Type 12 enclosure.	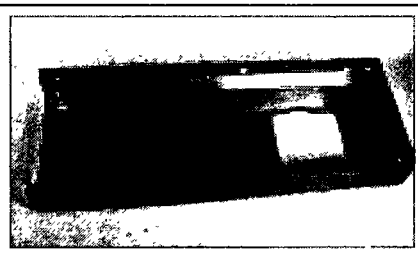
12	Tightly screw in the enclosure using the attached screws.	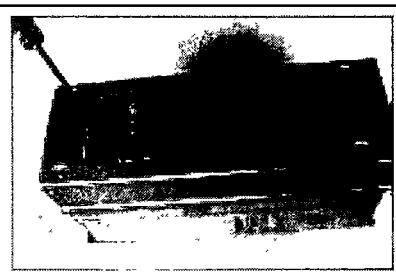

January 2004

Chapter 4 — Specifications

Table 4-1: NEMA Type 12 Kit — Dimensions and Weight

Catalog Number	Frame Size	Approximate Dimensions in Inches (mm)			Approximate Weight in Lb. (kg)
		Length	Width	Height	Weight
OPTN12FR4	Fr4	13 (330)	7 (178)	4 (102)	4 (1.8)
OPTN12FR5	Fr5	16 (406)	8 (203)	7 (178)	5 (2.3)
OPTN12FR6	Fr6	21 (533)	10 (254)	5 (127)	7 (3.2)

Company Information

Eaton Electrical Inc. is a global leader in electrical control, power distribution, and industrial automation products and services. Through advanced product development, world-class manufacturing methods, and global engineering services and support, Eaton Electrical® provides customer-driven solutions under brand names such as Cutler-Hammer®, Durant®, Heinemann®, Holec® and MEM®, which globally serve the changing needs of the industrial, utility, light commercial, residential, and OEM markets. For more information, visit **www.eatonelectrical.com**.

Eaton Corporation is a global diversified industrial manufacturer with 2002 sales of $7.2 billion that is a leader in fluid power systems; electrical power quality, distribution and control; automotive engine air management and fuel economy; and intelligent drivetrain systems for fuel economy and safety in trucks. Eaton has 51,000 employees and sells products in more than 50 countries. For more information, visit **www.eaton.com**.

Eaton Electrical
1000 Cherrington Parkway
Moon Township, PA 15108-4312
USA
tel. 1-800-525-2000
www.eatonelectrical.com

EATON | Cutler-Hammer

© 2004 Eaton Corporation
All Rights Reserved
Printed in USA
Publication No MN04003011E/CPG
January 2004

Section Four

BISCO Environmental

NEEP Systems

Soil and Groundwater Remediation Equipment

Operation & Maintenance Manual

Water Treatment
Air Stripper System

Project 12365

Proposal # 107405-1
SEI – Omega – CA

Prepared for:

SEI
587 Palm Canyon Drive, Suite 209
Borrego Springs CA, 92004

135 ROBERT TREAT PAINE DRIVE
TAUNTON, MASSACHUSETTS 02780
TEL: (508) 738-5100 FAX: (508) 738-5022

www.biscoenv.com

ShallowTray®
low profile air strippers

ShallowTray®
Low Profile Air Stripper

Installation, Operation,
&
Maintenance Manual

Serial Number:

_____

BISCO Environmental-NEEP
135 Robert Treat Paine Drive, Taunton, Massachusetts 02780
Phone: 508-738-5100 Fax : 508-738-5022 Email: sales@biscoenv.com

500-200-00560 05/07

BISCO Environmental

NEEP Systems

Soil and Groundwater Remediation Equipment

Table of Contents

Section 1 – Air Stripper System

- NEEP, Shallow Tray, Low Profile Air Stripper Specifications
- NEEP, Shallow Tray, Low Profile Air Stripper Installation, Operation & Maintenance Manual
- American Fan Model RB-351, Air Stripper Blower Specifications & Performance Curve
- American Fan Company, Air Stripper Blower Installation, Operation & Maintenance Manual
- AMCA Recommended Safety Practices for Industrial & Commercial Fans

Section 2 – Transfer Pump

- American Stainless Pump, Air Stripper Discharge Transfer Pump Installation Operation & Maintenance Instructions

Section 3 – Instrumentation

- Dwyer Series 2000 Differential Pressure Gauge Specifications - Installation & Operating Instructions
- Dwyer Series 605 Magnehelic Differential Pressure Indicating Transmitter Specifications - Installation & Operating Instructions
- Dwyer Series 1950 Differential Pressure Switch Specifications - Installation & Operating Instructions
- Air Stripper Sump Float Level Switch Specifications

Section 4 – Control Panel

- Control Panel Schematics & Wiring Diagrams
- Main Circuit Breaker (CBM) Installation, Operation & Inspection Instructions
- Allen-Bradley Overload Relay Application Bulletin
- Allen-Bradley 700-FSA3UU23, Timing Relay Specifications

Section 5 – System Drawings

- Water Treatment Air Stripper Process & Instrumentation Diagram

Section 6 – Warranty

- Limitation of Warranty & Limitation of Remedy

Section 1 – Air Stripper System

- NEEP, Shallow Tray, Low Profile Air Stripper Specifications
- NEEP, Shallow Tray, Low Profile Air Stripper Installation, Operation & Maintenance Manual
- American Fan Model RB-351, Air Stripper Blower Specifications & Performance Curve
- American Fan Company, Air Stripper Blower Installation, Operation & Maintenance Manual
- AMCA Recommended Safety Practices for Industrial & Commercial Fans

TABLE OF CONTENTS

ShallowTray Low Profile Air Stripping System	**Section 1**
The ShallowTray Process	**1-1**
The ShallowTray Basic System	**1-2**
ShallowTray Components	**1-3**
Operating Instructions	**Section 2**
Special Precautions	**2-1**
Equipment Set-Up	**2-2**
Initial Start-Up	**2-3**
Routine Operation	**2-11**
Cleaning Procedures	**Section 3**
Troubleshooting	**Section 4**
Components List, Drawings, & Cutsheets	**Section 5**

The ShallowTray Process

Air is vented to the atmosphere or to vapor phase treatment of choice.

Water travels around the full length of the baffled tray, becoming progressively cleaner.

Turbulent frothing maximizes volatilization and scours the stripper tray.

Contaminated water inlet.

Treated water falls into holding tank.

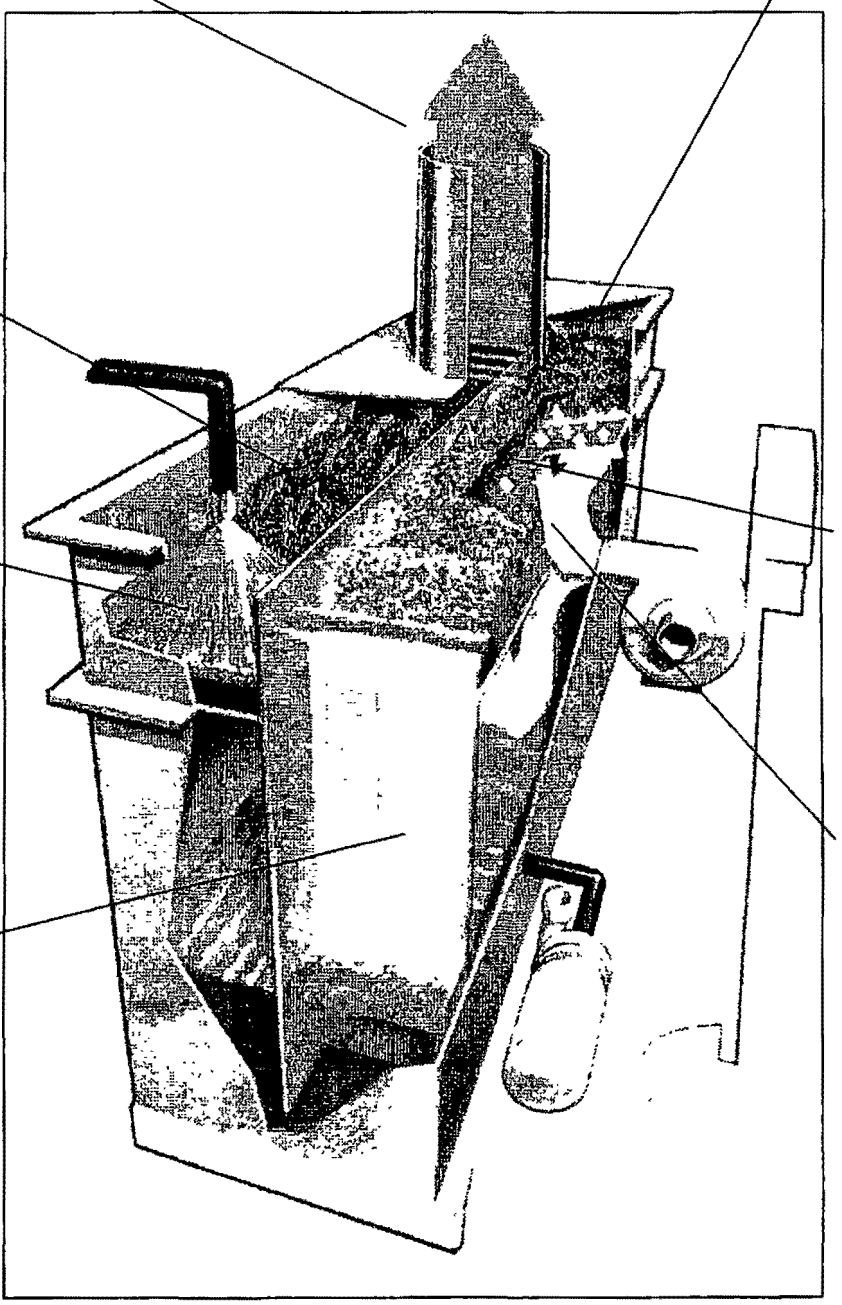

3/16" (4.8mm) holes resist fouling.

Fan blows fresh air up through hundreds of holes into the water.

Section 1: ShallowTray Process

1-1 THE SHALLOWTRAY TREATMENT PROCESS

The purpose of air stripping is to removed dissolved volatiles from liquids. Such dissolved volatiles include radon and carbon dioxide removed from potable wellwater, volatile organic compounds (VOCs) removed from contaminated groundwater plumes, and VOCs removed from industrial process and wastewater treatment streams.

The stripping mechanism of the proprietary ShallowTray low profile perforated plate air stripper is dependent on the flow of an influent liquid through a long, narrow channel on a discrete number of trays while subject to a countercurrent flow of ambient air at a fixed flowrate.

The intense formation and rupture of billions of bubbles in the confined narrow path of water flowing counter-current to multiple fresh air vents is a dynamic process that provides a mass transfer mechanism that displaces the dissolved volatiles from the aqueous stream into the vapor stream.

The ShallowTray low profile air stripper mechanism is a proprietary process protected under U.S. Patent # 5045,215 and 5,240,595.

The ShallowTray Basic System

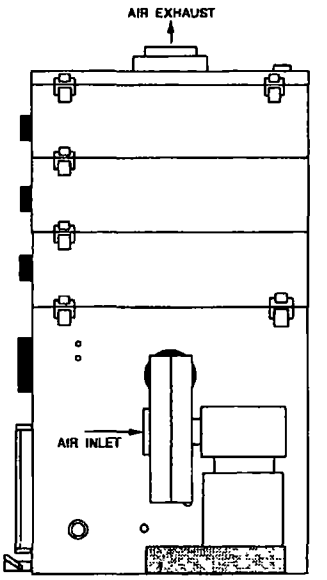

1. 2331 STAINLESS PRESSURE SYSTEM (FORCED DRAFT)

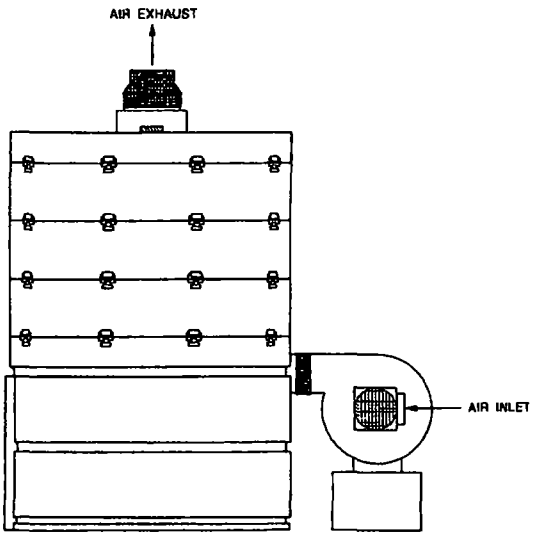

2. 2331-P LLDPE PRESSURE SYSTEM (FORCED DRAFT)

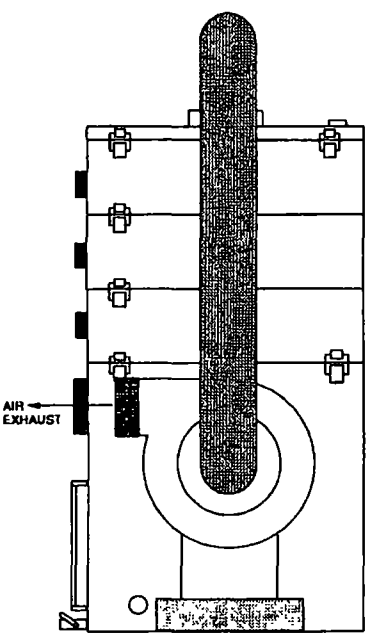

3. 2331 STAINLESS VACUUM SYSTEM (INDUCED DRAFT)

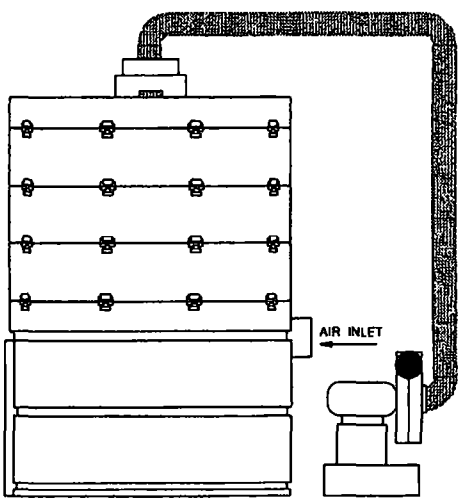

4. 2331-P LLDPE PRESSURE SYSTEM (INDUCED DRAFT)

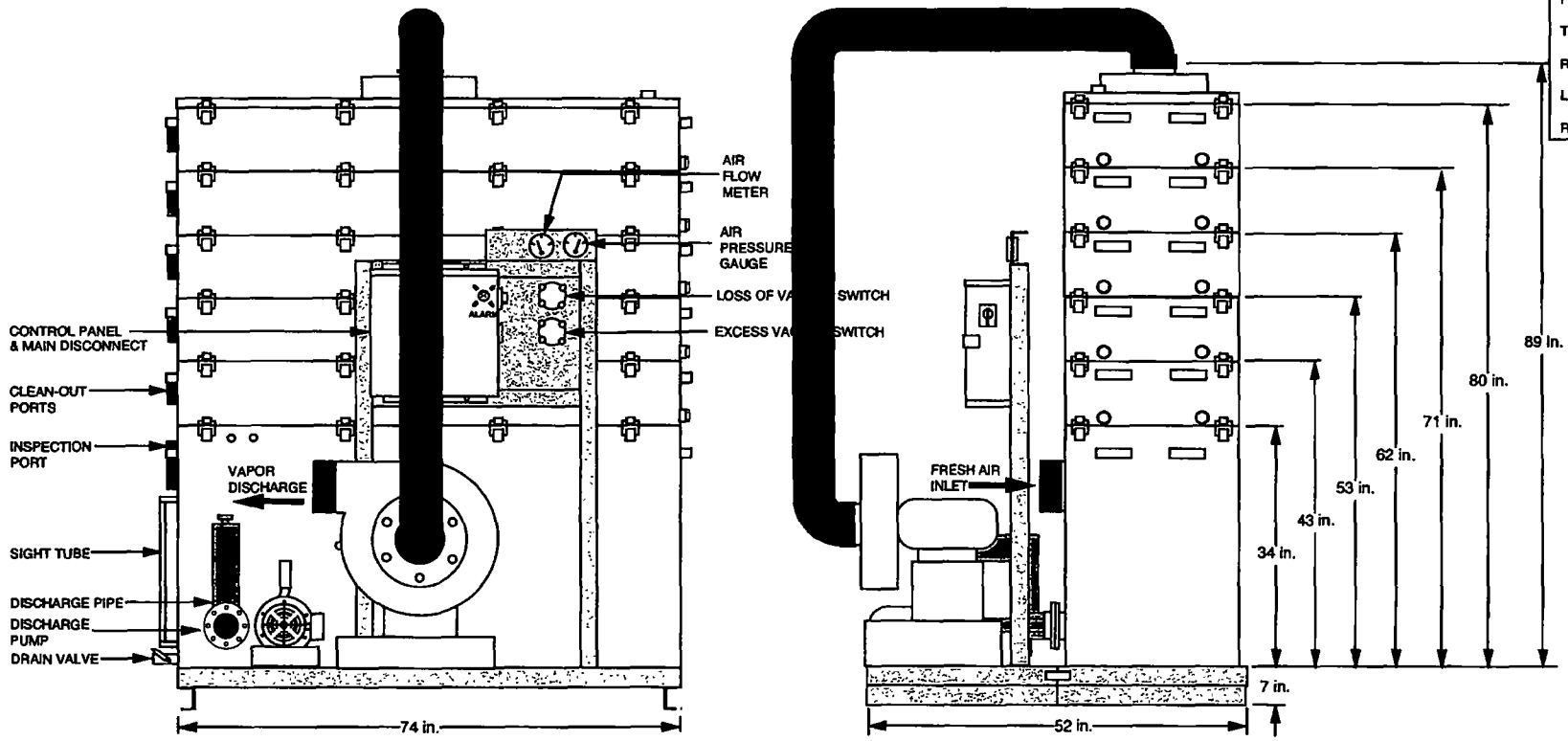

MINIMUM CLEARANCE

FRONT	1.5 ft.
TOP	15 in.
REAR	N/A
LEFT	6.5 ft.
RIGHT	1 ft.

BASIC SYSTEM

- ✓ SUMP TANK
- ✓ STRIPPER TRAYS
- ✓ BLOWER
- ✓ MIST ELIMINATOR
- ✓ PIPING
- ✓ SPRAY NOZZLE
- ✓ WATER LEVEL SIGHT TUBE
- ✓ GASKETS
- ✓ LATCHES

OPTIONAL ITEMS

- ✓ SKID & STANCHION
- ✓ GRAVITY DISCHARGE PIPING
- ✓ DISCHARGE PUMP
- — FEED PUMP
- — ADDITIONAL BLOWER
- — EXPLOSION-PROOF MOTOR(S)
- — LOCAL DISCONNECT NEMA 7
- ✓ CONTROL PANEL
- ✓ MAIN DISCONNECT SWITCH
- — I.S. COMPONENTS/REMOTE MOUNT
- ✓ INTERMITTENT OPERATION
- — STROBE LIGHT
- — ALARM HORN
- — POWER LAPSE INDICATOR
- ✓ LOW AIR PRESSURE ALARM SWITCH(ES)
- ✓ HIGH WATER LEVEL ALARM SWITCH
- ✓ DISCHARGE PUMP LEVEL SWITCH
- — WATER PRESSURE GAUGE(S)
- — DIGITAL WATER FLOW INDICATOR
- ✓ AIR PRESSURE GAUGE
- ✓ AIR FLOW METER
- — TEMPERATURE GAUGE(S)
- — LINE SAMPLING PORT(S)
- — AIR BLOWER SILENCER
- ✓ WASHER WAND
- — AUTO DIALER

NOTE: THIS DRAWING IS REPRESENTATIVE OF A STANDARD SHALLOWTRAY CONFIGURATION, AND IS NOT INTENDED FOR ENGINEERING DESIGN OR LAYOUT. ACTUAL ARRANGEMENT AND DIMENSIONS MAY VARY DEPENDING ON BLOWER SELECTION OR OTHER ACCESSORIES. PLEASE CONTACT NEEP FOR DETAILED DESIGN INFORMATION.

POWER: 3Ø, 230 Volt, 3 WIRE + GROUND 60 Hz
CONSULT N.E.E.P. FOR OTHER AMPACITIES AND VOLTAGE OPTIONS

CONNECTION INFORMATION

ITEM	SIZE
GRAVITY DISCHARGE	4"Ø FLANGE, PVC80
DISCHARGE PUMP	2"Ø FNPT
WATER INLET	2"Ø FNPT
AIR EXHAUST NOZZLE	8"Ø STUB w/8" CPLG

STRIPPER CONSTRUCTION:
304L STAINLESS STEEL

NORTH EAST ENVIRONMENTAL PRODUCTS, INC.
7 COMMERCE AVENUE
WEST LEBANON, NEW HAMPSHIRE 03784
PHONE: 603-298-7061 FAX: 603-298-7063
www.neepsystems.com

© 2002 NEEP

TOLERANCES UNLESS OTHERWISE SPECIFIED: ± 1 INCH	DRAWING NAME: ShallowTray® Model 2651		
	DRAWING #: Proposal # 107405-1		
DRAWN: GWC	CUSTOMER: SEI		
DATE: 5/3/07	SCALE: NTS	SIZE: A	SHEET . 1 OF :1

1-2 THE SHALLOWTRAY BASIC SYSTEM

ShallowTray systems are fabricated from 304L stainless steel, 316L stainless steel, or rotationally molded polyethylene, and are provided with components to facilitate the requirements of the process, including the following:

Forced Draft Versus Induced Draft

Forced Draft (F.D.) System: The blower is installed so that the air is fed under positive pressure into the stripper sump below the stripper trays are pressurized. This arrangement is used when the maximum total blower discharge pressure (air stripper plus other downstream pressure losses) does not exceed 26 inches (56cm) water column (w.c.) pressure for plastic strippers, or 32 inches (82cm) w.c. for stainless steel strippers.

Induced Draft (I.D.) System The blower is installed such that it pulls air into the stripper sump, up through the trays, and into the blower inlet, thus subjecting the stripper interior to a slight vacuum. Removal efficiency is not changed by this arrangement. The blower is therefore sized to provide the pressure drop required for the ShallowTray, plus the pressure drop required by downstream offgas treatment devices.

High Water Flow Versus Low Water Flow

Due to increased froth heights on the trays at higher flowrates, two water flow ranges are considered in the design of the basic system, **Low Flow** and **High Flow**. The high flow system requires a blower that produces an additional 4 inches (10.2 cm) w.c. pressure drop across the stripper as compared to the low flow system blower. The Low and High water flow ranges for each ShallowTray series are listed in the table below:

ShallowTray Series	Low Water Flow Range	High Water Flow Range
1300P	0.5 - 15 gpm	N/A
1300	0.5 - 15 gpm	16 - 22.5 gpm
2300P	1 – 30 gpm	31 - 50 gpm
2300	1 - 30 gpm	31 - 45 gpm
2600	2 - 60 gpm	61 - 115 gpm
3600	3 - 90 gpm	91 - 160 gpm
31200	4 - 150 gpm	151 - 425 gpm
41200	6 - 200 gpm	201 - 550 gpm
61200	12 - 350 gpm	351 - 1000 gpm

1-3 Basic System Components

Components information sheets ("cutsheets") from the manufacturer are included in the Components Information Section (Section 5) at the back of this manual

Blower

The blower supplied with the ShallowTray low profile air stripper unit is typically type B spark resistant with a cast aluminum wheel, direct driven @ 3450 rpm, with motor options of Totally Enclosed Fan Cooled (TEFC) or Explosion Proof (EXP), as determined by the power available and electrical code classification of the site.

Each blower is selected to provide air flow that exceeds the minimum standard cubic feet per minute (SCFM) air flow required at the required working pressure (inches of w.c.) of the system. It is important that the blower damper be set to provide the unit with the required fresh air flow.

It is also important that water not enter the blower housing while the blower is in operation; this will damage the blower and void the warranty. During normal operation, the high water level alarm switch prevents this from happening. Confirm that this switch is installed properly.

The installed motor horsepower is selected to provide an operating range with a significant safety margin. However, there is the potential for the blower motor to overload if it is not working against sufficient pressure drop. Therefore, the blower must be protected with a thermal overload switch.

The blower damper should be set so that the blower produces the minimum stripper air flow requirement (see table below), and at the same time the motor does not exceed its nameplate amperage maximum.

Air Flow Damper

The stripper blower is fitted with an adjustable damper, used to make air flow rate (SCFM) adjustments to the stripper. Open the damper to increase air flow rate, and close the damper to decrease air flow rate. Note that air pressure may vary as the air flow rate is changed. To get an accurate air flow measurement, install an air flow meter in the air duct.

If air flow meter installation is not possible, an estimated air flow can be obtained by measuring the stripper pressure drop. At initial start-up, adjust the damper until the air pressure is at the minimum required for the system. (Refer to the pressure gauge description for minimum pressure readings).

Be aware that when making damper adjustments after the system has been operating, fouling may occur in the system, which may reduce the air flow rate and may increase the air pressure reading.

The following table gives the minimum and maximum air flow rate for each ShallowTray series:

ShallowTray Series	AirFlow Minimum	AirFlow Maximum
1300 & 1300P	150 SCFM (255 m3/hr)	180 SCFM (305 m3/hr)
2300 & 2300P	300 SCFM (510 m3/hr)	360 SCFM (610 m3/hr)
2600	600 SCFM (1020 m3/hr)	720 SCFM (1220 m3/hr)
3600	900 SCFM (1530m3hr)	1080 SCFM (1830 m3/hr)
31200	1800 SCFM (3060 m3/hr)	2160 SCFM (3670 m3/hr)
41200	2400 SCFM (4080 m3/hr)	2880 SCFM (4900 m3/hr)
61200	3600 SCFM (6120 m3/hr)	7340 SCFM (7956 m3/hr)

Mist Eliminator

A wire mesh mist eliminator is installed beneath the air exhaust port, located on the top cover of the ShallowTray. The purpose of the mist eliminator is to remove water droplets that would have blown through the vent line. It is possible, though unlikely, that the mist eliminator may become plugged or fouled. If this occurs, the mist eliminator is easily removed for cleaning. Disconnect the vent line, take off the top cover, and remove the retaining plates on the bottom of the cover. The mist eliminator can be cleaned with a pressure washer, or replaced with a new one.

Gasket

A black nitrile (or neoprene on the 2300-P) sponge is used to form an airtight/watertight seal between the sump tank, cover, and stripper trays. A replacement gasket can be glued to the sealing flange using an industrial contact adhesive. Please contact North East Environmental Products prior to making any gasket repairs or adjustments.

Sight Tube

The sight tube provides a means of visually monitoring the water level in the sump tank. Make sure the valve to the sight tube is open during stripper operation.

Spray Nozzle

An inlet spray nozzle is installed in all units except those with a gravity feed option. The nozzle directs the influent water to the top tray inlet chamber. The nozzle is selected to relieve the inlet pressure from 10 through 50 psig down to near atmospheric for ShallowTray operation.

If the nozzle becomes plugged, it is easily removed by removing the top cover and unscrewing the nozzle from the inlet coupling. Clean it with a wire brush or a pipe cleaner. If the nozzle causes too much back pressure or becomes plugged to often, it can be removed without any serious effects on the system's performance. Gravity fed systems employ an inlet dip tube that extends below the water level of the inlet chamber to provide a water seal.

Note: System performance is based on ShallowTray operation without a nozzle, and the performance warranty is valid whether a nozzle is installed or not.

ShallowTray System Options

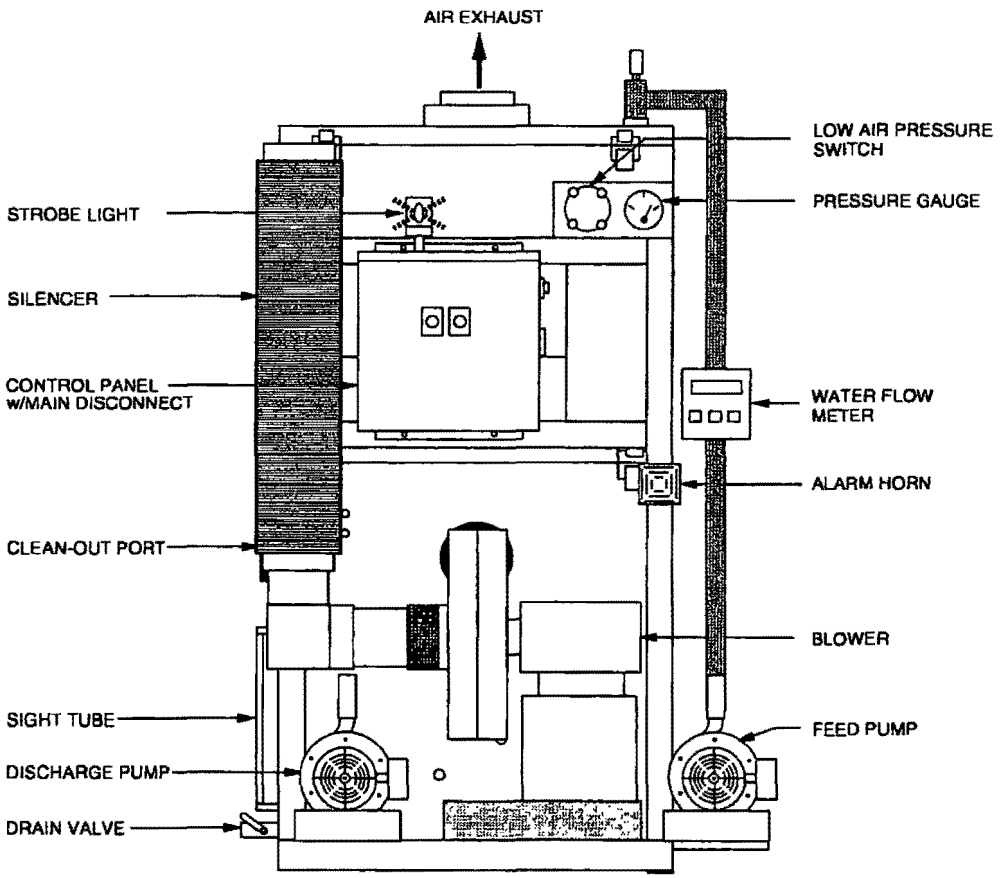

2331 STAINLESS PRESSURE SYSTEM WITH OPTIONS

NOT ALL OPTIONS SHOWN

SHALLOWTRAY ACCESSORY OPTIONS

ShallowTray System Options

ShallowTray low profile air strippers are custom built to meet site and project specifications. Please refer to the components list insert (Section 5) to see which options were selected for this system. Component information cutsheets are included in (Section 5) of this manual.

Air Blower Silencer

An air blower silencer can reduce the noise level of the blower. The size of the silencer and the type of connection used to mount it are dictated by the size of the blower, and whether the silencer is mounted horizontally or vertically. Silencers should be supported to avoid over-stressing the connections, and should be secured if exposed to high wind loads.

Air Flow Meter

An air flow meter measures the amount of air flowing through the system. It consists of a pitot tube mounted in the air duct and connected via two (2) lengths of tubing to a differential pressure gauge. The measured velocity pressure can be converted to an air flow velocity. The pitot tube must be located at least 8 1/2 pipe diameters downstream of any pipe fitting or transition, and at least 1 1/2 diameters of straight pipe upstream of the end of the duct or any elbow. The best pitot tube location is before the stripper because the air is less humid and the gauge tubing is less likely to fill with condensate.

The air flow meter typically gives readings in inches of water column, (w.c.), which is converted to feet per minute (FPM) using the provided chart or the gauge scale calibrated for the specific duct inside diameter. As stated in the damper section, the air flow meter in conjunction with the pressure gauge provides the most accurate damper adjustments, especially after initial start-up.

The table below lists the minimum vapor exhaust duct diameters.

Stripper Series	Minimum Exhaust Duct Diameter
1300	6 "Ø (16 cm)
2300	6 "Ø (16 cm)
2600	8 "Ø (20 cm)
3600	10 "Ø (25 cm)
31200	16 "Ø (40cm)
41200	18 "Ø (45cm)
61200	18 "Ø (45cm)

Note: Restricted airflow is the most common cause of poor removal efficiencies. An airflow meter is highly recommended to help ensure adequate air flow.

Air Pressure Gauge

The air pressure gauge reads the pressure differential across the stripper trays in inches of water column (w.c.). The gauge is connected to the system via tubing that attaches to a pressure port on the system. Instructions to connect the gauge for the types of systems are as follows:

Forced Draft System – Using tubing, connect the "High" pressure port on the gauge to the 1/8"Ø (3mm) shutoff valve/hose barb located on the air stripper sump. The "Low" pressure port on the gauge is left open to the atmosphere. Highest pressure drop is between the sump tank and the surrounding atmosphere.

Induced Draft System - Using tubing, connect the "Low" pressure port on the gauge to the hose barb located on the exhaust vent line on the air stripper. The "High" pressure port on the gauge is left open to the atmosphere. Highest pressure drop (vacuum) is between the cover exhaust and the surrounding atmosphere.

Note: there are two pairs of pressure ports on the gauge, one pair for side entry, the other pair for rear entry. One pair should be used to measure the differential pressure, and the other unused pair must be sealed with a plug.

At initial start-up, the pressure gauge can be used to measure blower damper adjustments. Adjustments should be made according to the following nominal differential air pressure table:

Nominal Differential Air Pressure

Number of trays	Low Water Flow Sys	High Water Flow System
1 tray system	4-6 in. w.c. (10-15 cm.)	7-10 in. w.c. (18-25 cm.)
2 tray system	7-10 in. w.c. (18-25 cm.)	11-14 in. w.c. (28-36 cm.)
3 tray system	11-14 in. w.c. (28-36 cm.)	16-18 in. w.c. (40-46 cm.)
4 tray system	16-18 in. w.c.(40-46 cm.)	20-22 in. w.c. (50-56 cm.)
5 tray system	20-22 in. w.c. (50-56 cm.)	24-26 in. w.c. (60-66 cm.)
6 tray system	24-26 in. w.c. (60-66 cm.)	28-30 in. w.c. (71-76 cm.)

Refer to high/low water flow range description in Section 1-3 above.

Note: The nominal differential pressures shown are for the air stripper pressure drop only, and do not include additional air stream equipment pressure requirements.

After initial start-up, fouling may occur in the system, which may increase the nominal air pressure reading, and may decrease the air flow rate.

Control Panel

The control panel serves two basic functions for operation of the system. The first is to provide the necessary starting and circuit protection components for each motor load, consistent with NEC electrical code. These components include fuses, circuit breakers, motor starter contactors, overload relays, and lock-out/tag-out (LOTO) features.

The second function is to provide process control and alarm status/interlock components. Alarm circuit monitor several conditions, most basically the low air pressure alarm switch and the high water level alarm switch. If either of these alarms occur, the alarm interlock will provide shut off signal to the incoming water source (feed or well pumps), if the appropriate interconnects have been made. Other alarm options are also available.

Control Panel: Intrinsically-Safe (I.S.) Components

ShallowTray low profile air stripper systems that operate in or near potentially explosive concentrations of vapors will require special hardware to meet code requirements for power wiring and for instrument and switch connections. In such cases, intrinsically-safe (I.S.) isolation of signals to and from switches and instruments is employed to limit the energy to a level lower than the energy required to generate a spark. Typical components that need I.S. protected signals are float switches and well probes. Determination of when I.S. signals are required is the responsibility of the design engineer with knowledge of the site specific code requirements.

Digital Water Flow Indicator/Totalizer

Water flow meters with totalization are often supplied as part of the ShallowTray air stripper. Available in several designs and sizes, flowmeters are typically installed in the water feed piping to the stripper, and usually provide a local readout of flowrate (gpm) and the totalized flow (gallons). Refer to the components list insert Section 5 to see which flowmeter was provided with this system. Component information cutsheets are included in Section 5 of this manual.

Flowmeters are sensitive mechanisms that require proper care and maintenance for reliable service. It is prudent to install a strainer or bag filter upstream of the flowmeter to protect it from mechanical damage from debris in the pipeline. If the strainer and/or flowmeter become plugged, disassemble and clean in accordance with the manufacturer's instructions.

Feed and Discharge Pumps

If pump(s) are included by NEEP as part of your system, they have been selected to meet the required flow and pressure requirements. The pumps are typically end suction, flooded inlet, direct coupled, centrifugal pumps, with either EXP or TEFC motors. The pumps are not self-priming. Prior to initial start-up, the pumps must be primed by filling the pump impeller housing with clean water. Throttling valves are typically installed on the effluent pump discharge. If the pump is running wide open and it is not pumping against the required head, the pump may cavitate. This is the nature of centrifugal pumps; they must be throttled back if they are not pumping against the required head. The valve should be throttled until the motor amperage is less than the nameplate motor amps rating.

Before system start-up, it is important to check for proper rotation of the impeller. A pump rotating in the wrong direction could cause the pump impeller to spin off, causing serious damage to the pump.

Systems using discharge pumps must have the flow rates balanced so that the discharge flow rate is greater than the inlet flow rate.

Refer to the components list insert (Section 5) to see which pump(s) were provided with this system. Component information cutsheets are included in (Section 5) of this manual.

High Water Level Alarm Float Switch

The high water level alarm float switch is one of the alarm sensors that must be connected prior to system start-up. The purpose of the high water level alarm float switch is to sense an excessively high level of water in the stripper sump, and provide a signal to communicate to the upstream water source to shut off the incoming water. The high water level float switch is a normally closed microswitch that opens when the float rises approximately 3 1/2 inches (9cm) above its coupling's centerline.

Component information cutsheets for the float switch are included in (Section 5) of this manual.

Line Sampling Ports

Line sampling port(s) (when included) are provided to take water samples of incoming contaminated water and outgoing clean water. The sampling ports are typically 1/2" (1cm) ball valves.

When taking a water sample, open the valve and let the water flow for at least 1 minute prior to bottling the sample. This purges the sample port of any stagnant water.

When purging the sample ports be sure to capture the water and properly dispose of it. When starting the unit for the first time double check that the valves on the sample ports are closed.

Low Air Pressure/Vacuum Alarm Switch

The low air pressure/Vacuum alarm switch monitors the blower for continuous water treatment. This switch is one of the alarm interlocks that must be properly connected by a licensed electrician prior to the system's initial start-up. Please see Special Precautions at the beginning of Operating Instructions section for more information.

Should the blower fail, the low air pressure switch is wired to shutoff all incoming water. Using tubing, connect the switch to the hose barb on the tank (pressure system) or the hose barb in the cover exhaust duct (vacuum system).

Pressure system – The air hose is connected from the sump rank 1/8 " (3mm) hose barb (without valve) to the "high" pressure port on the switch using the provided hose barb. The "low" pressure port must be open to the atmosphere. The switch measures the differential pressure between the sump tank and the atmosphere.

Vacuum system – The air hose is connected from the exhaust piping 1/8" (3mm) hose barb to the "low" pressure port on the switch using the provided hose barb. The "high" pressure port must be open to the atmosphere. The switch measures the differential pressure between the top tray and the atmosphere.

Periodically inspect the air hose for water build-up, which will affect the switch's operation. The tubing must remain open at all times.

Test the switch at initial start-up by removing the air hose from the hose barb on the sump tank or exhaust pipe once the system is in full operation. This should set the system into an alarm condition and shut off the incoming contaminated water.

High Air Pressure/Vacuum Alarm Switch

The high air pressure/vacuum alarm switch prevents the system from exceeding its highest rated pressure/vacuum value. If the blower has the ability to produce pressure/vacuum higher than 32 inches (82cm) W.C, for stainless units or 26 inches (56cm) W.C. for plastic units then it should have a high pressure/vacuum alarm switch. Be sure to check that the setpoint for alarm shutdown is at the proper setting for the system.

Panel Disconnect Switch

The panel disconnect switch removes power from the ShallowTray low Profile air stripper control panel. Make sure a qualified licensed electrician installs the power supply into the disconnect switch. Be sure to ground the switch to the main service ground.

Water Temperature Gauge

Water temperature gauges can be installed on both the inlet and outlet piping. Influent water temperature is an important variable affecting the system's removal efficiency.

Water Pressure Gauge

Water pressure gauges can be installed on both the inlet and outlet water piping. Excessively high readings could signal that something in the piping system is plugged. Large pressure fluctuation could be a sign that the water flow rate is varying.

Section 2: Operating Instructions

2-1 Special Precautions:

It is important that a qualified licensed electrician perform these installations.

The following operations must be carried out prior to initial system start-up:

Step 1: Connect the Interlock switches.

High Water level Interlock
If the water level in the sump tank rises beyond the maximum level, it could flood the blower. This may damage the blower and void the warranty. The high water level interlock switch is used to shut off the feed water pump in an emergency situation.

Low Air Pressure/Vacuum Interlock
If the blower fails, untreated water could be discharged. The low air pressure/vacuum interlock switch will shut off the feed water pump to prevent additional water from entering the stripper.

High Air Pressure/ Vacuum Interlock
If the system has a blower capable of producing more than 32 inches (82cm) of water column (w.c.) for a stainless stripper or more than 26 inches (56cm) w.c. for a polyethylene stripper, then the system requires a high pressure/vacuum switch. If a unit fouls or pressure increases due to off-gas treatment, it may exceed the maximum pressure rating of the system and cause damage to the gaskets, sump, or trays.

Note: These interlock options might not have been provided as part NEEP's scope of supply.

Step 2: Fill the Sump Tank and each tray's inlet Chamber.

On initial start-up the sump tank must be filled with **clean water** to a height of about 5 inches (13cm). Make sure the valve to the sight tube is open. The sump tank can be filled via the clean-out ports on the end of the stainless units, or through the inlet water port located on the cover. The inlet chamber on each tray (referred to as seal pots) can be filled manually by pouring **clean water** through the 1 inch (3cm) inlet chamber filling ports, or the 4 inches (10cm) clean out ports located on the ends of the stainless units, or by disassembling the plastic units and filling the seal pots as you reassemble. The seal pots on both the plastic and stainless systems can also be filled at initial start-up by connecting a **clean water** line to the inlet water port and running the system for ten minutes with the blower on and the damper 1/4 open. For complete instructions on this method, please follow initial Start-up procedures later in this section.

Do Not Run Free-Product Through the ShallowTray Air Stripper.
Free product contaminates the unit by coating the side walls with a film of free-product. ShallowTray units are designed to remove dissolved VOC's only.

Fresh air is required for the system air intake. Air that is heavily contaminated with VOC's will significantly reduce Shallow Tray's performance.

2-2 EQUIPMENT SET-UP

Drawings: Drawings referred to in the following sections are located in Section 5.

Follow codes. The plumbing and electrical installations must be performed by qualified personnel, and must be done in accordance with local, state, and national codes.

Protect critical items from the environment. In areas that could be below freezing, the stripper should be installed in a heated building. Plastic units, control panels, and motors should be protected from direct sun. Explosion-proof motors should be protected from rain due to the absence of motor gaskets.

Install adequate supports. Since **none** of the external piping associated with the ShallowTray unit is designed to support process water lines or air piping, adequate supports must be installed.

Assemble Unit. All ShallowTray units are assembled and hydraulically tested at the factory. However, to safeguard the units from shipping damage, some components are removed prior to shipping and will require reassembly. Follow all relevant steps in this section to set-up the ShallowTray system.

Check for loose fittings. Shipping the system to the site may have caused pipe joints or assembly hardware to loosen. Re-tighten as necessary.

Bolt unit together. For shipping purposes, the ShallowTray unit may come in two sections; the blower skid assembly and the sump and tray skid assembly. Bolt the base frames together using the bolts and spacers provided. (This step is done at the factory for the 1300 and 2300 series.)

Connect Blower. For forced draft (F.D., or positive pressure) systems, install the provided rubber coupling to connect the blower outlet to the air inlet on the sump tank. (See Section 5 coupling layout drawing for air inlet location.) For induced draft (I.D., or vacuum) systems, install an exhaust duct from the stripper air exhaust located on the top cover to the blower intake. North East Environmental Products may not have provided this piping. Make sure the pipe diameter is large enough to maintain the required air flow without adding a pressure drop. Also, be sure the pipe has a suitable vacuum rating to prevent collapse.

Caution: Blower must draw air. Do not vent storage tanks that contain substances that will contaminate the air in the same room the blower draws air from. Do not duct intake air from an area that has contaminated air. Contaminated air will contaminate the water.

Assemble trays and level the ShallowTray unit. Large ShallowTrays may have the top tray and cover shipped separately. Install trays shipped separately by lining up the match-marked arrows and numbers on the trays and cover. To prevent damaging the gasket, do not drag the trays or cover across the gasket during assembly. Fasten all latches properly. The tray being installed must have the downcomers from each upper tray line up with the sealpots on the tray below. Check all the trays to make sure they are installed correctly, and not backwards. If the system is not set up properly, the water could bypass a tray allowing water to miss a large portion of the treatment path. Refer to the "basic subassembly" exploded view drawing in Section 5.

Level the ShallowTray. This is a critical step in the proper assembly of the equipment. If not level, the water depth on the trays will be uneven, causing the water to weep through the tray holes untreated.

For a gravity discharge unit (no discharge pump): Install the outlet pipe.
The plumbing components are typically shipped in a separate box. Refer to the Section 5 outlet piping drawings to assemble.

F.D. systems require a riser pipe (inverted U-trap) to compensate for the pressure generated by the blower. It is important that the riser pipe height be adjusted to create a 5 inch (13 cm) water depth in the sump tank during normal operating conditions. The provided anti-siphon valve must be installed in the high point of the riser pipe to prevent the sump from siphoning to below the 5inch depth. It is essential that the riser pipe be properly supported. Use proper pipe sealant and PVC cement for the riser pipe. We recommend running the system and adjusting the riser pipe before permanently bonding the fitting.

The purpose of having the 5 inch (13cm) water depth in the sump tank is twofold. First, it is to keep the downcomer (from the bottom tray) and the water discharge port (which elbows down internally) submerged. Both are set to a height of 2 inches (5cm) from the bottom of the sump. Keeping them submerged forms a water seal, which prevents air from escaping up the downcomer pipe or out the discharge trap.

Second, the 5 inch (13cm) depth is low enough to allow our high water level switch to reset. The switch, located in its typical position, has an approximate reset deadband of six inches, meaning the water level must drop 6 inches (15cm) below the alarm trip point before it resets. Consult NEEP for additional options or questions about float switch location or normal operating water depth.

For a unit with a discharge pump: Install the outlet pipe.
For a pumped discharge unit: Refer to the Section 5 outlet piping drawing to assemble the water line from the sump tank to the pump suction, using components delivered in a separate box. Install downstream piping to the pump discharge port. A ball valve is typically provided and should be used to adjust flow. Use proper pipe sealant or PVC cement as required. If check valve is required, install on discharge side of pump. To reduce pressure losses, it is recommended that the connected pipe size remain at least as large as the pump discharge fitting.

Prime the pump.
Pour clean water in the pump's inlet port until it has filled the entire pump chamber. Remove the top air bleed plug on the pump housing to let air bleed out, then replace plug.

Install the inlet piping manifold.
Install the inlet piping manifold (typically shipped in a separate box). Follow the Section 5 inlet piping diagram for proper installation. The spray nozzles are installed on the inside of the cover, or have been shipped separately. The nozzles are typically selected to produce a 15 psig pressure drop at the highest anticipated water flow rate.

During start-up, a strainer should be installed in the Water inlet line to prevent the spray nozzle and process water line components from plugging with sand and sediment. If necessary, the strainer can be permanently installed. Use proper pipe sealant or PVC cement as required.

Caution: For systems other than 31200 , 41200, and 61200, there are two inlet port couplings on the cover; one is over the discharge side of the tray and cannot be used, so it is plugged. The other coupling is the active inlet, and has the spray nozzle inside the top cover. The 31200, 41200, and 61200 series have three, four, and six ports respectively, and all are used. The feed must enter the inlet located above the sealpot of the top tray. Otherwise contaminated water will bypass the treatment path of the first tray and fall directly into the downcomer to the next tray. This will result in poor removal efficiency.

Install the sump drain valve and the sight tube.
Install the sump drain valve and the sight tube. Refer to the Section 5 coupling layout drawing for port locations. Be sure to open the valve to the sight tube during start-up and operation. The valve should be closed only to replace a damaged sight tube.

Connect the water lines.
If the seal pots have not yet been filled with clean water, connect a clean water line to the inlet port or piping manifold and fill the seal pots according to the steps outlined in the initial start-up section above. If the seal pots are filled with clean water, connect the process water line to the inlet piping manifold. Connect the discharge water line. Firmly support the process water lines to prevent stress on the piping and ports. The system is not designed to support the weight of the process water lines.

Connect the air pressure tubing.
Connect the tubing from the ShallowTray to the low air pressure/vacuum switch (if provided), and/or the high air pressure/vacuum gauge (if provided). Read the component description on each for detailed connection information, and also refer to the Section 5 drawings. For the air pressure gauge, be sure to install the tubing to the 1/8" (3mm) shutoff valve. Open the valve only when a reading is required. This will reduce condensation build-up in the gauge. The air pressure switch tubing should always be open for continuous sensing. The switch is designed to drain excess condensation.

Connect the air discharge line.
Connect an air exhaust duct to the air outlet, either on the top of the unit for F.D. installations, or at the blower discharge for I.D. installations. Do not use an exhaust duct with a smaller diameter that the discharge port. A smaller diameter may cause a pressure drop larger than the blower was designed for, resulting in low air flow and poor removal efficiency. Support the vent line independently of the air stripper so that it can be easily disconnected for maintenance purposes.

Wire the electrical components.
Have a qualified licensed electrician wire the electrical components in compliance with local, state, and national codes. Make sure the safety interlocks, described in the Special Precautions section, are connected properly. If NEEP supplied the control panel, see Section 5 wiring diagrams.

Install optional items:

Air flow meter
Mount the pitot tube on the vent line per Dwyer bulletin # H-11 (located in the separate shipping box) or per the Section 5 "air flow meter assembly" drawings using the mounting hardware provided. Connect pitot tube to the 0-0.5 or 0-1.0 inches w.c.. air pressure gauge using the tubing provided. (See pitot tube mounting diagram in Section 5.) There are two air hoses required, one connects to the high pressure port on the gauge and on the pitot tube, and measures internal static pressure plus velocity pressure. The other connects to the low pressure ports on the gauge and on the pitot tube, and measures the internal static pressure only. The optimum pitot tube location is before the stripper, because the air is less humid and the tubing will be less prone to filling with condensation.

Blower Silencer:
Forced Draft system – Install the silencer on the inlet side of the blower. If the silencer is to be in the vertical position, install the piping and elbow as shown on the Section 5 silencer diagram. If the silencer is in the horizontal position, attach it directly to the blower inlet using a rubber coupling.

Induced Draft system – Install the silencer on the blower. The standard silencer's maximum pressure/vacuum rating is 20 inches (50cm) w.c. Be sure not to exceed the silencer's limit

Water flow meter

Install the water flow meter into the inlet piping per the Section 5 water inlet piping diagrams. The flow meter owner's manual was sent with the unit. Be sure to refer to it when installing the meter. It is prudent to install a strainer in the incoming process water line prior to the water flow meter. This will prevent rotor jamming.

Note: There may be other optional equipment that requires installation or assembly. Please refer to the Section 5 specification sheet and drawings for more information.

2-3 INITIAL SYSTEM START UP

Upon completion of the equipment set-up and mechanical/electrical installation, proceed with the following steps:

Step 1: Check all connections and close drain and sample valves.
Double check that all electrical, water, and vent connections are properly made. Close drain port and sample valves. Be sure that the sight valve is open.

Step 2: Power up.
Turn all panel control switches to the 'OFF' position, then turn 'ON' the panel disconnect switch. Systems with intermittent operation feature will show an alarm condition (low air pressure) five seconds after power is applied because the blower is not operating. Once the blower is supplying proper pressure, the alarm low air pressure condition will reset. Some systems may require pushing an 'Alarm Reset' button.

Step 3: Check the blower rotation.
Check the blower rotation by momentarily switching 'ON' (bumping) the blower switch and observing whether the blades turn in the direction of the arrow on the blower casing. You can also observe the motor's cooling fan blades for proper rotation. If system panel has the intermittent operation feature, the blower motor must be bumped in the 'Hand" position. Refer to the Routine Operation Section for a description of "intermittent operation". If blower rotates in the wrong direction, turn the main disconnect off and have a electrician make wiring changes to correct the rotation.

Step 4: Attach clean water line to the inlet.
If you did not fill the seal pots on each tray manually, fill them now by attaching a (clean) water line to the water inlet piping manifold or port, and then follow Step 5. If you have already filled the seal pots manually, skip Step 5 and go to Step 6.

Step 5: Fill the seal pots (inlet chamber) with clean water.
Use clean water when filling the seal pots. If contaminated water is used it will go through the system untreated.

To fill the seal pots (inlet chambers), set the blower damper to 1/4 open, and start the blower and the clean water flow to the unit. Let the blower and clean water run for about five to ten minutes, then shut them off. Setting the damper at 1/4 open reduces the air flow enough to allow the water to flow through the downcomers and into the seal pots.

If the system has the intermittent operation feature, the blower must be started in the 'Hand" position for this procedure. If you have trouble filling the seal pots by this method you can fill them manually, either by using the one inch sealpot filling ports (stainless units only), or by spraying a stream of clean water through the clean-out ports (stainless units only). The stream of water must be directed into the sealpots on the opposite side of the unit, until the sealpot is full. For plastic units you must remove the trays and fill the sealpots manually.

Step 6: Connect contaminated feed water line.
Connect contaminated feed line. Install all piping allowing provision for future removal for maintenance or repair. Make sure piping is supported independently of the ShallowTray. Start system with the blower damper 1/2 open. For systems with intermittent operation, you must turn 'OFF' the power at the panel disconnect, turn all control switches to the auto position, and then reapply panel disconnect power. All motors will start automatically based on control function. Each control panel is custom designed for each site. Become familiar with the panel logic and proper operation before attempting to start the system. The panel might have been provided by a panel manufacturer other then NEEP.

Step 7: Check the air pressure reading and set damper.
Run the unit for 5 minutes, and then adjust the blower damper setting to produce the required air pressure/vacuum reading on the pressure gauge. Since the blowers provided by NEEP are selected and tested to exceed the minimum flow requirements of the system, you can use the table in Section 1-3 to set the damper during initial start-up.

Double check pressure reading after system has been running for about 1/2 hour. Adjust damper again if needed. Also check the airflow meter for proper airflow rate. Pressure readings may vary somewhat depending on your venting system.

The System is ready for operation.
It is not necessary to perform initial start-up procedures each time the system is shut down. However, note that anytime water is completely removed from the seal pots or sump tank, the initial start-up procedure must be done again. For example, after the system has been taken apart for cleaning, or after an extended shutdown where the water have may evaporated from the tank or seal pots.

2-4 Routine Operation

From the tables in Section 1-3 adjust the airflow to within the required operating range in SCFM. The airflow must be a least the minimum shown for proper stripping efficiency.

Adjust water flow rate by setting the water throttle valves. Now that the system has been primed per the initial start-up procedures, it is ready for fine tuning. Adjust throttle valves on inlet and outlet piping to obtain the desired water flow rates and minimum pump cycles, if applicable. Refer to the Section 5 specification sheet for your systems design and maximum water flow rates. To prevent a high water level alarm, it is critical that the discharge pump flow rate exceed the influent water flow rate.

Pumps provided by NEEP have throttle valves on the discharge side of the pump. Once the desired water flow rate is achieved, check the amp draw of the motor. It must not exceed the pump nameplate amp draw.

High water level alarm switch: The switch is typically installed in the middle of three half inch switch ports located on the front of the unit (refer to the Section 5 coupling layout drawings). If the float is moved to the highest port and the discharge line plugs or the discharge pump fails, the water level could rise above the air inlet port, allowing water to drain into the F.D. blower housing or onto the floor. The blower may become damaged if it is running while water is in the blower housing. Be sure to check that the 1/8"Ø (3mm) coupling in the bottom of the blower housing is open to allow for drainage of water that may get into the housing.

Section 3: Cleaning Procedures

Minerals dissolved in high concentrations tend to precipitate out of groundwater during air stripping processes. These minerals form insoluble deposits commonly referred to as 'fouling.' Although the ShallowTray low profile air stripper system is designed to be fouling resistant, proper steps must be taken when treating water with high mineral concentrations. Deposits from iron-rich feed water can be reduced by pretreating the feed stream with sequestering agents. The recommended cleaning procedure for deposits is pressure washing with detailed instructions as follows:

Equipment Required:

Pressure Washer: 2 gpm minimum flow at 900 psig (minimum). Equipment rental companies can usually supply electric or gasoline driven units on a daily rental basis.

Washer Wand: Washer wand with spray nozzle, (obtainable from North East Environmental Products as an option) and an adapter to connect the wand to the pressure washer hose end. All washer connections are 1/4" (6mm) NPT.

Clean Water Supply: Clean water supply with a capacity of at least 2 gpm at 20 psig. Connect to the pressure washer using an ordinary garden hose.

System Shut Down:

Shut feed water off.

Shut off the water feed to the system.

Wait 5 minutes to allow the water in the stripper trays to be completely treated, then shut off the blower. Treated water in the trays will drain into the sump tank, so it is important to keep the outlet pump in "auto" to remove this extra water.

Shut off the power at the main disconnect switch if the shutdown is more than temporary.

Caution: If proper shut down procedures are not followed, contaminated water will drain into the sump tank. This will contaminate the water that has been collected in the tank. Therefore, always allow the blower to run an additional 5 minutes after the feed water is shut-off.

Cleaning the Unit:

Step 1: Turn off equipment.

Turn off the feed water to the stripper.

Step 2: Provide for Waste Disposal.

Make provisions for disposing of the sludge and waste generated during cleaning. A wet/dry vacuum may be required, or possibly the outlet pump (if provided) can pump out to a storage tank. Be aware that large pieces of debris might possibly clog the outlet pump or check valve.

Step 3: Remove cleanout port covers.

Remove all cleanout port covers.

Step 4: Turn on water and pressure washer.

Turn on the water supply to the pressure washer. Then, turn on the pressure washer. Wear protective goggles or face shield while spraying.

Step 5: Insert wand and start pressure washer water flow.

Insert the wand all the way into 8" (20cm) cleanout port on the sump tank. Have the spray nozzle pointed up toward the bottom of the bottom tray. Holding the wand tightly, pull the trigger to start the pressurized water flow. Expect the wand to kick back as flow starts.

Step 6: Move wand side to side.

Move the wand side to side at a rate of about 1 inch (3cm) per second. Be sure to cover the entire tray bottom area. Recommended cleaning times for one side of one tray are given below:

Model 1300	2 min
Model 2300	4 min
Model 2600	8 min
Model 3600	12 min
Model 31200	23 min
Model 41200	32 min
Model 61200	48 min

Step 7: Inspect cleaned area.

Periodically stop the cleaning operation and inspect the cleaned area by shining a light into the unit. The area is clean when there are no deposits in or around the stripper tray holes.

Step 8: Clean top side of tray.

When the bottom surface appears clean, move the wand to the top side of the same tray by inserting it in the next highest cleanout port. Continue spraying with the nozzle pointed down onto the top surface of the tray. Remove all visible deposits from the tray baffles and the walls of the unit.

Step 9: Repeat for all trays.

Repeat the procedure for the bottom of the next higher tray, etc., working up to the top tray.

Step 10: Rinse.

After the cleaning operation is finished, rinse the trays, baffles, and walls with the pressure sprayer. Work down from the top tray to the sump tank. Make sure the surfaces are clean and the holes are not blocked by loosened debris.

Step 11: Clean cover.

Remove the top cover. Flip it over, and wash the bottom side. Inspect spray nozzle and the wire mesh mist eliminator pad for fouling. Clean the spray nozzle and the mist eliminator pad.

Step 12: Replace the mist eliminator pad.

Mist eliminator pads that are excessively plugged should be replaced. The old pad is removed by loosening the retainer plates on the corners of the pad. Reinstall the new pad in the same orientation as the old one.

Section 4: Trouble Shooting

Note: A competent electrician should perform any work inside the electrical control panel. Do not perform troubleshooting if you are not familiar with the procedures or the equipment.

Problem Blower Won't Start Or Run

No power to blower

Check that all switches are in "ON" or "AUTO" position.
Position main disconnect switch to "ON" position. Turn control switches to" on" or "AUTO".

Blown Fuse **Check to see if fuses are ok.**
Check fuses in main disconnect switch and in control panel. If blown, replace with fuse of the same size and rating to avoid the risk of fire or electrical shock.

Overload relay Trips **Locate reset button on blower overload relay.**
Push reset button in. Reasons for tripping; incorrect line voltage, motor wired incorrectly, inadequate ventilation, worn bearings.

Tubing to air pressure switch plugged
Remove tubing from air pressure switch and blow into it towards tank. Clean or replace tubing if plugged or kinked.

Blower dose not rotate freely.
TURN OFF ALL POWER to the system. Try to spin wheel by hand. Wheel should rotate freely. If not, call NEEP.

Problem Outlet Pump Won't Shut Off

Suction or Discharge piping to pump is clogged.
Check water flow from discharge pipe. Piping should be clean inside. Look for narrowing caused by scale or iron accumulation. Remove piping. Inspect, clean, or replace as necessary.

Float switch in tank is stuck in down position.
Remove 8"Ø or 12"Ø (30cm) inspection cap and check that all floats are floating on the water. Clean all deposits from float. Replace float if necessary.

Normal Operation: Water level in sump is OK Pump will stop when water level reaches pre-determined height in tank. Allow water level to decrease until pump turns off. Let water level reach predetermined lower level, which will cause outlet pump to turn off. Water level may be just below the bottom of clear sight tube before pump shuts off – this is normal.

Problem Outlet Pump Won't Run Or Pump Water

No power to Pump **Check that all switches are in "ON' or "AUTO" position.**
Position panel disconnect switch to "ON position. Turn control switches to "ON" or "AUTO."

Blown fuse **Check to see if fuses are ok.**
Check fuses in main disconnect Switch and in control panel. If blown, replace with fuse of the sane size and rating to avoid the risk of fire or electrical shock.

Overload relay trips **Locate reset button on pump overload relay.**
Push reset button in. Reasons for tripping; incorrect line voltage, motor wired incorrectly, inadequate ventilation, worn bearings.

Normal operation: Water level in sump is OK. Pump will start when water level reaches predetermined height in tank. Allow water level to increase until pump turns on. Be sure pump switch is in "AUTO" position. Let water level reach predetermined upper level, which will cause outlet pump to turn on.

Level switch in tank is wired incorrectly in control panel
Check wiring circuit against diagram. See that all connections are tight and no short circuits exist because of worn insulation, crossed wires, etc. Rewire any incorrect circuits. Tighten connections, replace defective wires.

Pump does not rotate freely
TURN OFF ALL POWER TO THE SYSTEM. Try to turn impeller by hand.If impeller won't turn, remove housing and locate source of binding. It could be due to impeller, seal, or bearing damage, or excessive fouling.

Impeller or check valve is fouled.
TURN OFF POWER. Remove pump outer housing and inspect impeller for blocked openings. Be sure to have a new housing gasket kit available before removing housing. Remove check valve from line and inspect for stuck or fouled valve. Clean or replace impeller or check valve as necessary.

Problem Low Air Pressure/Vacuum in Stripper Tank.

Blower damper closed.
Visually check position of damper on inlet of blower. Open damper to get proper reading on pressure gauge. Firmly tighten damper set screw.

Motor rotation backwards
Watch rotation of blower wheel at slow speed. It must match direction of the rotation arrow on the blower housing. Have electrician reconnect wiring for proper rotation as per motor diagram.

Gravity discharge trap installed incorrectly
Trap should be positioned vertically, as an "upside down U." Install discharge trap per outlet plumbing drawings located in Section 5.

Inlet chamber (sealpot) in each tray not full of water.

Remove 4"Ø (10cm) rubber caps, or slide tray aside and look at water level in chambers. Remove 4 inch (10cm) rubber caps on end of trays. Fill up inlet chambers with a hose, or follow the sealpot fill procedure as described in the initial Start Up section.

Rubber clean out caps not in place.

All cleanout ports must have a rubber cap installed. Tighten clamps on all rubber caps.

Tubing to pressure gauge

Remove tubing from pressure gauge and blow into it towards tank. Clean or replace tubing if plugged or kinked.

Gravity feed not flowing

Unit has gravity feed and inlet pipe on inside of ShallowTray cover is not submerged in inlet chamber water. Remove cover and measure length of piping hanging from inside of cover. Length is to be about 10 1/2 inches (27cm) from cover surface. Adjust length of inlet pipe on inside of cover until total length is about 10 1/2 inches (27cm). DO NOT INSTALL NOZZLE ON A GRAVITY FEED UNIT.

Blocked blower intake

Look at blower intake screen. Remove debris from screen.

Normal operation: When inlet pump starts, the blower will start and air pressure will increase to required operational level. No action necessary.

Problem High Pressure/Vacuum in Stripper

Air exhaust is restricted

Check vent piping for bird nest or other obstructions. Check that vent pipe diameter does not decrease. Intake or exhaust air pipe diameter must be at least as big as the cover vent or blower intake diameters.

Air holes in trays plugged

Remove inspection and cleanout caps and visually inspect holes. For iron fouling, clean out the unit with a pressure washer. For scaling, scrape or bang the scale from all surfaces, then use a pressure washer to open the 3/16 inch (5mm) diameter holes. Consider using a sequestering agent to prevent scaling.

Mist eliminator is plugged

Remove cover from ShallowTray and inspect the bottom of the mist eliminator pad in the cover. Remove mist eliminator pad from cover and clean. If fouled, replace with a new mist eliminator.

Problem Water won't flow into unit

Inlet/well pump function

Allow water level to rise in well pump, which will turn on the inlet pump and start water flow to system. No action necessary.

Stripper air pressure in low alarm condition

Read sump tank air pressure from pressure gauge. System should be in alarm condition if pressure is below about 2" inches (5cm) w.c. Check that blower is operating properly, and has correct rotation. Check that all rubber caps are in place on end of trays.

Inlet piping plugged

Remove cover and inspect nozzle and piping for debris and buildup. Clean or replace clogged parts.

Problem Iron Fouling Is A Problem

Iron build-up

Iron precipitates out of water when treated with an air stripper, causing iron build up in unit. Remove cleanout caps and inspect inside of tray for buildup/fouling. Clean out unit with pressure washer on a routine basis. Pretreat incoming water to reduce fouling problems in stripper. Meter a sequestering agent into the water.

Problem VOC Removal Is Less Than Expected

There are many possible reasons for poor stripper efficiency. Review the following list of questions to troubleshoot what the problem might be.

1. Have the trays been taken apart? Are they put back together as supplied from the factory, i.e., nozzle over sealpot, downcomers from each tray underwater in the sealpot of the tray below?

2. What is the sump tank air pressure reading? Is it steady, slowly changing over time, or rapidly fluctuating?

3. What is the flow rate through the stripper? How is it measured? Where is the sensor mounted?

4. What is the air intake and exhaust piping design (size of ducts, number of elbows, length of pipe run, GAC, heaters, other restrictions)? Are sample ports installed on each tray to verify pre-tray removal efficiency?

5. Is sump tank contaminated? Where are effluent samples taken from?

6. Are sample ports purged for 30 seconds-1 minute before taking sample?

7. Are samples being taken, stored, and tested per approved methods?

8. Are seal pots on each tray full of water?

9. Dose the sump tank have at least 4 inches (10cm) of water at all times?

10. Is the water suction elbow in the tank pointing down and always underwater?

11. What is the inlet water temperature?

12. What else is in the water besides the contaminates in question?

13. Are there occasional slugs of free product, or much higher than normal contaminant concentrations that could enter the stripper?

14. Is inlet water supplied as a continuous stream (as from an electric pump.)? Or is the flow pulsed (as from a pneumatic pump)?

15. Are their surfactants, detergents, greases, fats, etc. in the water that are causing foaming in the stripper?

16. Is there equipment near the blower intake that could be contaminating the air?

17.Has the air entering the blower been tested for VOCs?

18. How far away from each other are the air intake and air exhaust points? Is the air intake downwind of upwind from the exhaust? Is it possible for contaminated air to be sucked back into the stripper air intake?

19. Is the blower spinning in the correct direction (top of blower wheel spinning towards tank)? Watch wheel when it is almost stopped.

20. Is there air coming out of the discharge pipe?

21. Is outlet piping siphoning all water out of the sump tank, until it sucks air from tank?

22. What is the outlet plumbing design (gravity discharge, pumped discharge, uphill, downhill, other equipment in-line, size of piping. etc.)?

23. What do the bubbles look like in each tray? Install view ports to see.

24. Are the undersides of the trays free of drips and drizzles?

25. Are tray holes closed or plugged? Is there any scaling or fouling on the trays?

26. Is the system level and plumb?

27. When shutting system down, is inlet water shut off, blower allowed to operate for an additional 5 minutes, then blower shut off?

Section 5: Components List, Drawings, & Cutsheets

Bulletin RB-0502

AMERICAN FAN COMPANY®
&
WOODS
U.S.A. DIVISION

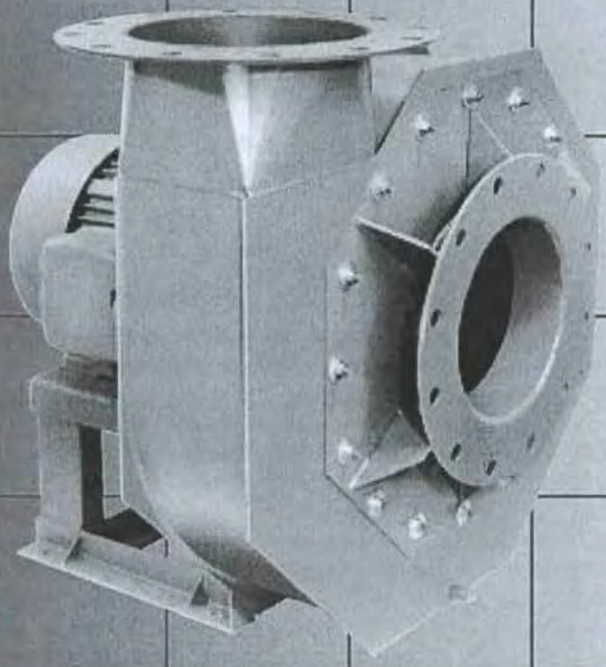

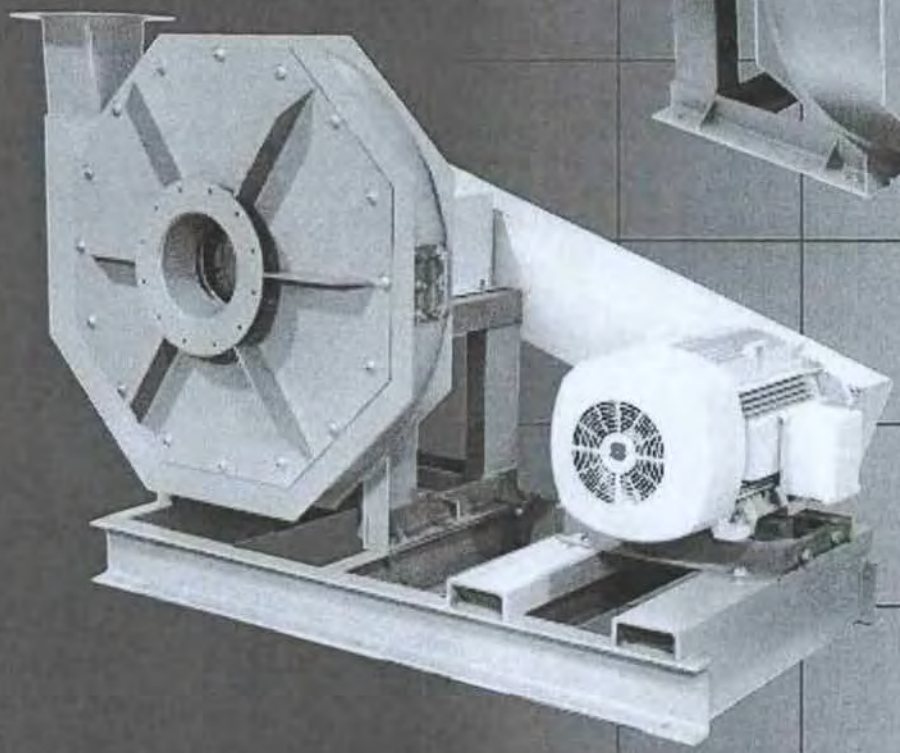

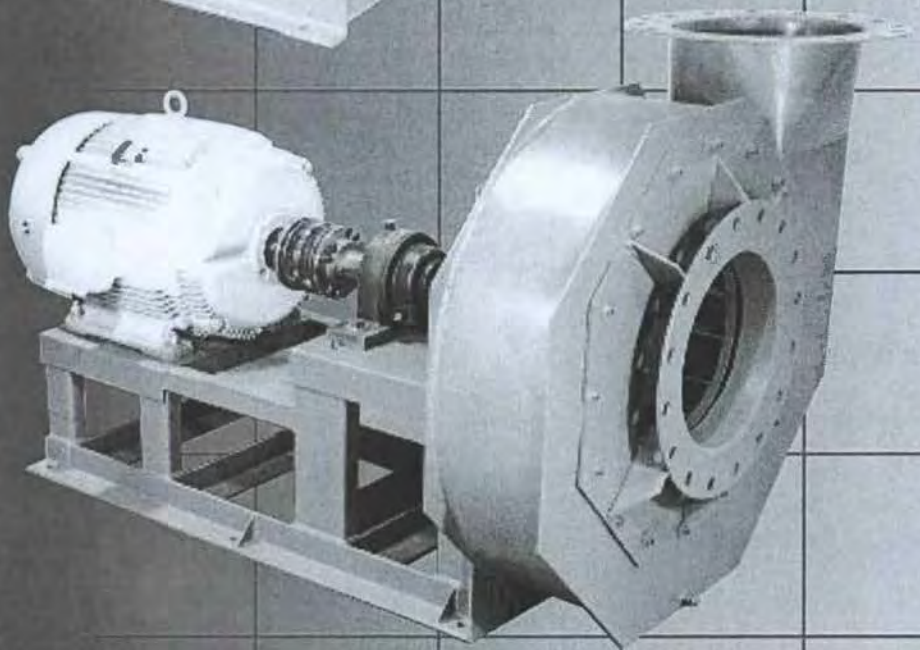

REG. NO. AQC-19207
ISO 9001
AMERICAN FAN CO.

RB PRESSURE BLOWERS

DESIGNS

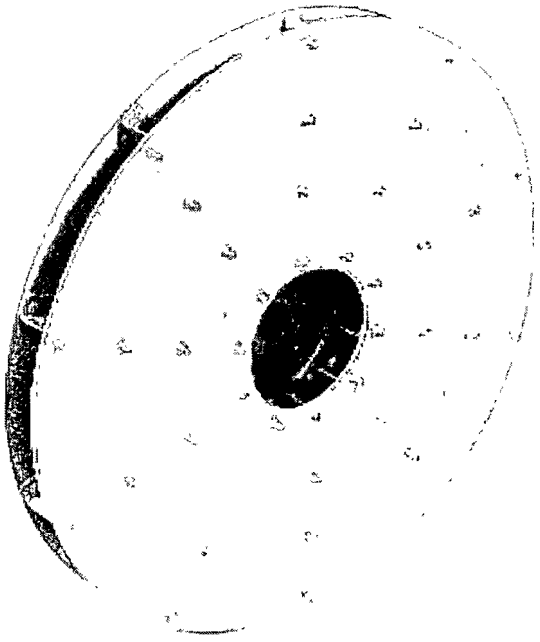

RB WHEEL DESIGNS 1, 2 AND 3
are narrow radial of all-riveted steel construction.

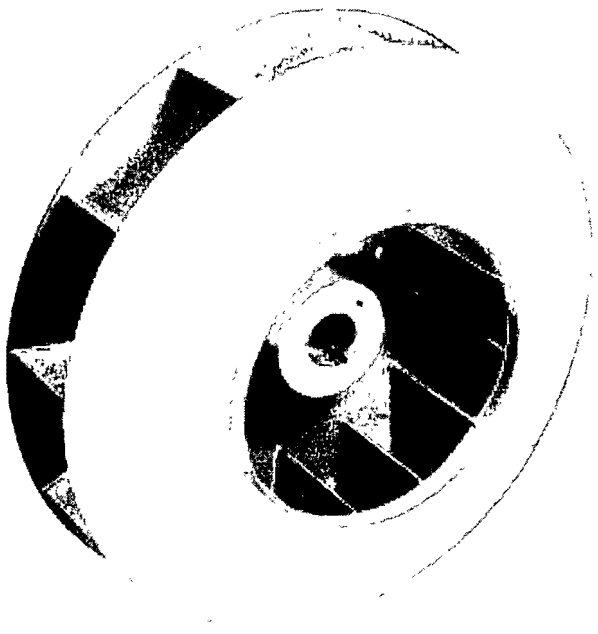

RB WHEEL DESIGNS 4 AND 5
are radial wheels with a conical frontplate and all-welded steel construction.

FEATURES

- Heavy gauge continuously welded steel housings
- Dynamically balanced wheels to assure smooth operation
- Teflon shaft seal with steel retaining plate standard
- Heavy-duty anti-friction pillow block ball bearings
- Close tolerance 1141 turned, ground, and polished shafting
- Pressures to 110" S.P. WG., Capacities to 12,000 CFM
- Round inlet and outlet with flanges drilled to match ANSI 150 # pipe flanges

ACCESSORIES

- Housing drain
- Housing Inspection Door
- Inlet Screen
- Outlet Screen
- High-temperature construction to 700°F
- Stuffing box
- Stainless steel or other alloy airstream
- Heat Slinger
- Spark-resistant construction
- Inlet damper
- Outlet damper
- Flexible Coupling for Arr't 8
- Special Coatings
- Drive Guards

TYPICAL APPLICATIONS

- Combustion Air
- Air Pollution Control Systems
- Induced Pneumatic Conveying
- Glass Blowing
- Drying
- Gas Boosting
- Material Aeration
- Cooling
- Air Flotation Conveyors
- Textile Fiber Stripping and Recycling

MAJOR INDUSTRIES

- Chemical
- Pulp and Paper
- Steel
- Glass
- Food Processing
- Energy
- Textile
- Petrochemical

HOW TO SPECIFY

RB - 251 - 3450 -18.5

- RB — Radial Blade Pressure Blower
- 251 — Size Designation
- 2 — Wheel Design
- 3450 — Blower RPM
- 18.5 — Wheel Diameter

DISCHARGE POSITIONS

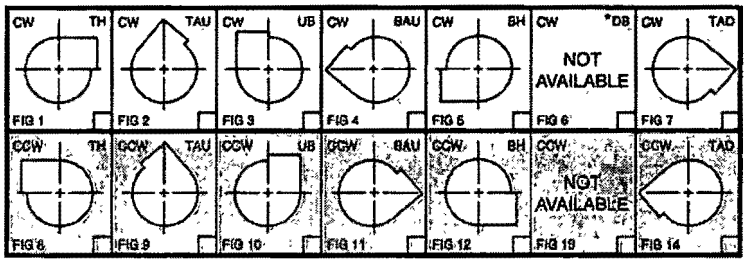

TEMPERATURE AND ALTITUDE CORRECTIONS

USING DENSITY CORRECTION FACTORS

The Capacity Tables in this bulletin are based on fans handling standard air at a density of .075 pounds per cubic foot equivalent to air at 70°F and 29.92" Hg barometric pressure. Therefore, when a fan handles air or other gases at other than standard density due to temperature, altitude or the type of gas, the published tables should be used in the following manner:

EXAMPLE: Select an RB Blower for 4250 ACFM @ 28 OZ. SP @ 250°F and 3000' Elevation.

1. Determine the equivalent static pressure in the following manner: **S.P. = REQUIRED S.P. X DENSITY FACTOR** for conditions from the table below, i.e.,**Equivalent S.P. = 28 X 1.50 = 42 OZ. SP.**
2. Using the required ACFM and the equivalent S.P. select an RB Blower from the tables i.e., **MODEL RB-453-3550-34.0** with a **BHP of 87.2**
3. Correct BHP for operating conditions by dividing BHP from table by density factor, i.e., $\frac{87.2}{1.5}$ = **58.1 BHP AT CONDITIONS.**

AIR TEMP.	ALTITUDE IN FEET ABOVE SEA LEVEL																			
DEG. F.	0	500	1000	1500	2000	2500	3000	3500	4000	4500	5000	5500	6000	6500	7000	7500	8000	8500	9000	10000
-60°	.76	.77	.78	.80	.81	.83	.84	.86	.87	.89	.91	.92	.94	.96	.98	1.00	1.02	1.04	1.06	1.10
-40°	.79	.81	.82	.84	.85	.87	.88	.90	.92	.93	.95	.97	.99	1.01	1.03	1.05	1.07	1.09	1.11	1.15
-20°	.83	.85	.86	.88	.89	.91	.93	.94	.96	.98	1.00	1.02	1.04	1.06	1.08	1.10	1.12	1.14	1.16	1.21
0°	.87	.89	.91	.92	.94	.96	.98	.99	1.01	1.03	1.05	1.06	1.09	1.10	1.13	1.15	1.17	1.19	1.22	1.26
40°	.94	.96	.98	1.00	1.02	1.04	1.06	1.08	1.10	1.12	1.14	1.16	1.19	1.21	1.23	1.26	1.28	1.30	1.32	1.36
70°	1.00	1.02	1.04	1.06	1.08	1.10	1.12	1.14	1.16	1.18	1.20	1.22	1.25	1.27	1.30	1.32	1.35	1.37	1.40	1.45
80°	1.02	1.04	1.06	1.08	1.10	1.12	1.14	1.16	1.19	1.21	1.23	1.26	1.28	1.30	1.33	1.36	1.38	1.41	1.43	1.48
100°	1.06	1.08	1.10	1.12	1.14	1.16	1.19	1.21	1.23	1.25	1.28	1.30	1.33	1.35	1.38	1.41	1.43	1.46	1.48	1.54
120°	1.09	1.12	1.14	1.16	1.18	1.20	1.23	1.25	1.28	1.30	1.32	1.35	1.38	1.40	1.43	1.46	1.48	1.51	1.53	1.58
140°	1.13	1.15	1.18	1.20	1.22	1.25	1.27	1.29	1.32	1.34	1.37	1.40	1.42	1.45	1.48	1.51	1.54	1.57	1.58	1.65
160°	1.17	1.19	1.22	1.24	1.26	1.29	1.31	1.34	1.36	1.39	1.42	1.44	1.47	1.50	1.53	1.56	1.59	1.62	1.64	1.70
180°	1.21	1.23	1.26	1.28	1.30	1.33	1.36	1.38	1.41	1.43	1.46	1.49	1.52	1.55	1.58	1.61	1.64	1.67	1.70	1.75
200°	1.25	1.27	1.29	1.32	1.34	1.37	1.40	1.42	1.45	1.48	1.51	1.54	1.057	1.60	1.63	1.66	1.69	1.72	1.75	1.81
250°	1.34	1.36	1.39	1.42	1.45	1.47	1.50	1.53	1.56	1.59	1.62	1.65	1.68	1.71	1.74	1.78	1.82	1.85	1.88	1.94
300°	1.43	1.46	1.49	1.52	1.55	1.58	1.61	1.64	1.67	1.70	1.74	1.77	1.80	1.84	1.87	1.91	1.94	1.98	2.00	2.08
350°	1.53	1.56	1.59	1.62	1.65	1.68	1.72	1.75	1.78	1.81	1.85	1.88	1.92	1.96	2.00	2.04	2.07	2.11	2.14	2.22
400°	1.62	1.65	1.69	1.72	1.75	1.79	1.82	1.85	1.89	1.93	1.96	2.00	2.04	2.08	2.12	2.16	2.20	2.25	2.27	2.35
450°	1.72	1.75	1.79	1.82	1.86	1.89	1.93	1.96	2.00	2.04	2.08	2.12	2.16	2.20.	2.24	2.29	2.33	2.38	2.41	2.50
500°	1.81	1.85	1.88	1.92	1.96	1.99	2.03	2.07	2.11	2.15	2.19	2.23	2.28	2.32	2.36	2.41	2.46	2.51	2.54	2.62
550°	1.91	1.94	1.98	2.02	2.06	2.10	2.14	2.18	2.22	2.26	2.30	2.35	2.40	2.44	2.49	2.54	2.58	2.63	2.68	2.77
600°	2.00	2.04	2.08	2.12	2.16	2.20	2.24	2.29	2.33	2.38	2.42	2.47	2.50	2.56	2.61	2.66	2.71	2.77	2.80	2.90
650°	2.10	2.14	2.18	2.22	2.26	2.31	2.35	2.40	2.44	2.49	2.54	2.58	2.63	2.68	2.74	2.79	2.84	2.90	2.94	3.04
700°	2.19	2.23	2.27	2.32	2.36	2.41	2.46	2.50	2.55	2.60	2.65	2.70	2.75	2.80	2.86	2.91	2.97	3.03	3.06	3.18

FAN	HOUSING		BASE			INLET	WHEEL			SHAFT	BEARINGS
SIZE	SIDES	SCROLL	SIDES	TOP	FEET	PLATE	FRONTPLATE	BACKPLATE	BLADES	DIA.	
251 252 253 254 255	10	12	10	10	2 x 2 x 3/16	7	10	10	12	1 11/16	SEALMASTER MP
301 302 303 304	10	12	7	7	2 x 2 x 1/4	7	10	10	12	1 15/16	SEALMASTER MP
351 352 353	10	12	1/4	1/4	2 x 2 x 1/4	7	10	10	12	2 3/16	LINK-BELT P-300
354 355	7	10									
401 402 403	7	10	6"-12# CHANNEL IRON	1/2 1/2	3 x 3 x 3/8	1/4	10	10	12	2 7/16	FAFNIR SAOL
404 405	1/4	7									
451 452 453	7	10	6"-12# CHANNEL IRON	1/2	3 x 3 x 3/8	1/4	10	10	12	2 11/16	FAFNIR SAOL
454 455	1/4	7									

PERFORMANCE DATA – DESIGNS 04 – 3600 RPM

NOTE: Performances shown are for Direct Drive. For Belt Drive selections, contact factory.

12 OZ. SP (20.78" SP)		
CFM	BHP	MODEL
199	1.3	251-3450-18.5
330	2.0	252-3450-18.5
390	2.1	253-3515-17.6
482	2.7	253-3515-17.5
654	3.9	253-3515-18.5
874	4.6	254-3515-17.8
1050	5.8	254-3515-17.5
1284	7.5	304-3515-17.5
1495	8.9	304-3515-18.0
1758	8.9	305-3515-17.0
2063	13.5	304-3515-19.5
2306	11.5	305-3515-17.5
2833	14.1	305-3515-18.0
3295	16.7	305-3515-16.5
3724	19.3	305-3515-19.0
4173	22.1	305-3515-19.5
6082	37.5	355-3550-20.5

14 OZ. SP (24.25" SP)		
CFM	BHP	MODEL
202	1.5	251-3450-19.5
335	2.3	252-3450-19.5
484	3.0	253-3515-18.5
678	4.4	253-3515-19.5
825	5.9	303-3515-19.5
1026	8.0	383-3515-20.5
1317	8.5	304-3515-18.5
1542	10.1	304-3515-19.0
1768	11.9	304-3515-19.5
1979	13.6	304.3515-20.0
2215	12.5	305-3515-18.5
2383	17.4	304-3515-21.0
2808	15.6	305-3515-19.0
3380	19.2	305-3515-19.5
3595	31.6	354-3550-22.5
4171	25.5	355-3550-19.5
4726	29.4	355-3550-20.0
5838	38.0	355-3550-21 0

16 OZ. SP (27.71" SP)		
CFM	BHP	MODEL
242	2.0	251-3450-21.0
393	3.0	252-3450-21.8
456	3.5	252-3450-21 5
599	4.1	253-3513-20.0
733	5.5	303-3515-20.0
663	6.6	303-3515-20.5
1088	9.0	383-3515-21.5
1375	9.5	304-3515-19.5
1399	13.0	303-3515-23.0
1611	11.6	304-3515-20.0
1854	13.5	304-3515-20.5
2090	15.6	304.3515-21.0
2543	20.9	354-3550-21.0
2865	19.4	355.3550-19.5
3623	24.1	355-3550-20.0
4326	28.9	355-3550-20.5
4956	33.6	355-3550-21 0
5536	38.1	355-3550-21.5

18 OZ. SP (31.18" SP)		
CFM	BHP	MODEL
214	1.9	251-3450-21.5
299	2.6	252-3450-21.5
480	4.3	302-3515-21.5
553	5.0	302-3515 22.0
627	5.8	302-3515-22.5
767	6.3	303-3515-21.0
903	7.5	303-3515-21.5
1154	10.1	303-3515-22.5
1435	11.7	304-3515-20.5
1705	13.3	304-3515-21.0
2109	18.0	354-3550-21.0
2414	20.9	354-3550-21.5
2708	23.9	354-3550-22.0
3000	22.2	355-3550-20.5
3740	27.2	355-3550-21.0
4521	32.9	355 3550-21.5
5216	38.3	355-3550-22.0
6476	49.1	355-3550-23.0
7439	60.3	405-3550-23.0
8886	75.2	405-3550-24.9
11060	100.6	405-3550-25.5

20 OZ. SP (34.64" SP)		
CFM	BHP	MODEL
497	4.9	302-3515-22.5
665	6.6	302-3515-23.5
814	7.2	303-3515-22.0
956	8.5	303-3515-22.5
1099	9.9	303-3515-23.0
1433	14.5	353-3515-23.5
1716	18.9	353-3515-24.5
2258	20.7	354-3550-22.0
2576	24.0	354-3550-22.5
3100	25.8	355-3550-21.5
3931	31.0	355-3550-22.0
4762	37.4	355-3550-22.5
5525	43.7	355-3550-23.6
6379	53.9	405-3550-23.0
7892	68.5	405-3550-24.0
9421	85.1	405-3550-25.0
12470	124.6	455-3550-26.0

22 OZ. SP (38.104" SP)		
CFM	BHP	MODEL
428	5.0	301-3515-24.5
707	7.5	302-3515-24.5
874	8.2	303-3515-23.0
1022	9.7	303-3515-23.5
1370	14.3	353-3515-24.0
1683	18.8	353-3515-25.0
2435	23.9	354-3550-23.0
3107	31.4	354-3550-24.0
4197	35.6	355-3550-23.0
4903	44.3	405-3550-23.0
5888	53.0	405-3550-23.5
6805	61.6	405-3550-24.0
8425	78.1	405-3550-25.0
10011	96.2	405-3550-26.0

24 OZ. SP (41.568" SP)		
CFM	BHP	MODEL
407	5.0	301-3515-25.0
550	6.3	302-3515-24.5
670	7.5	302-3515-25.0
889	10.8	352-3515-25.5
1119	12.1	353-3515-24.0
1470	16.4	353-3515-25.0
1540	18.7	353-3515-25.5
1958	24.0	353-3515-26.5
2640	27.6	354-3550-24.0
2988	31 7	354-3550-24.5
3434	39.0	404 3550-24.5
4200	41.8	405-3550-23.5
5302	51.1	405-3550-24.0
6331	60 8	405-3550-24.5
7302	70.4	405-3550-25.0
8186	79.7	405-3550-25.5
9014	88.9	405-3550-26.0
11231	118.6	455-3550-26.5

26 OZ. SP (45.032" SP)		
CFM	BHP	MODEL
363	4.9	301-3515-25.5
520	7.3	351-3515-26.0
636	9.2	351-3515-27.0
954	12.3	352-3515-26.5
1219	14.0	353-3515-25.0
1400	16.3	353-3515-25.5
1762	21.3	353-3515-26.5
2093	27.1	353-3515-27.5
2950	34.6	404-3550-24.5
3315	39.4	404-3550-25.0
3720	44.8	404-3550 25.5
4300	48.0	405-3550-24.5
5786	59.2	405-3550-25.0
6857	59.9	405-3550-25.5
7871	80.5	405-3550-26.0
9118	97.8	455-3556-26.0
11078	121.8	455-3558-27.0

28 OZ. SP (48.496" SP)		
CFM	BHP	MODEL
496	7.3	351 3515-26.5
628	9.4	351-3515-27.5
903	12.3	352-3515-27.0
1133	15.7	352-3515-28.0
1522	18.7	353-3515-26.5
1898	24.3	353-3515-27.5
2072	27.3	353-3515-28.0
2476	35.9	403-3550-25.0
3204	39.9	404-3550-25.5
3616	45.4	404-3550-26.0
4467	57.7	494-3550-27.0
6355	68.7	405-3550-26.6
7492	84.4	455-3550-26.8
8739	98.4	455-3550-26.5
10907	124.9	455-3550-27.5

30 OZ. SP (51.96" SP)		
CFM	BHP	MODEL
428	5.0	301-3515-24.5
473	7.3	351 3515-27.9
611	9.5	351-3515-28.0
837	12.1	352-3515-27.5
983	14.1	352-3515-28.0
1217	17.8	352-3515-29.0
1463	18.8	353-3515-27.0
1858	24.5	353-3515-28.0
2042	28.7	403-3550-27.5
2257	32.4	403-3550-28.0
2659	40.6	403 3550-29.0
3521	46.2	404-3550-26.5
3951	52.4	403-3550-27.0
4831	65.8	404-3550-28.0
5744	82.2	454-3550-28.0
7250	86.0	455-3550-26.5
8251	92.7	455-3553-27.0
9533	113.0	455-3550-27.5
11760	141.9	455-3553-25.5

32 OZ. SP (55.424" SP)		
CFM	BHP	MODEL
591	9.6	351-3515-28.5
788	13.3	351-3515-30.0
921	14.0	353-3515 28.5
1198	18.1	352-3515-29.5
1380	18.4	353-3515 27.5
1606	21.7	353-3515-28.0
1991	29.0	403-3550 28.0
2223	32.8	403-3550-28.5
2653	41.3	403-3550 29.5
3400	47.2	404-3550-27.0
4316	60.2	404-3550-28.0
5177	75.5	454-3550-28.0
6250	82.0	455-3550-27.0
7786	97.2	455-3550-27.5
9104	113.1	455-3550-28.0
11578	141.3	455-3550-29.0

34 OZ. SP (58.888" SP)		
CFM	BHP	MODEL
573	9.7	351-3515-29.0
719	12.3	351-3515-30.0
847	15.0	351-3515-31.0
1017	16.1	352.3515-29.5
1293	21.7	402-3550-29.5
1438	24.3	402-3550-30.0
1725	25.8	403-0550-28.0
1945	29.4	403-3550-28.5
2421	37.5	403-3550-29.5
2858	46.8	403-3550-30.5
3474	62.4	403-3550-32.0
4579	68.4	454-3550-28.0
5651	86.5	454-3550-29.0
7500	102.0	455-3550-28.0
8688	113.2	455-3550-28.5
10054	130.6	455-3550-29.0
11361	148.2	455-3550-29.5

PERFORMANCE DATA – DESIGNS 1-5 – 3600 RPM

NOTE: Performances shown are for Direct Drive. For Belt Drive selections, contact factory.

36 OZ. SP (62.353" SP)		
CFM	BHP	MODEL
556	9.8	351-3515-29.5
779	14.0	351-3515-31.0
1063	19.0	402-3550-29.5
1244	21.9	402-3550-30.0
1559	27-6	402-3550-31.0
1903	29.8	403-3556-28.0
2388	38.2	403-3550-30.0
2856	47.7	403-3550-31.0
3290	58.4	403-3550-32.0
4500	70.0	454-3550-28.5
5053	79.1	454-3550-28.0
5603	88.7	454-3550-29.5
6162	98.8	454-3550-30.0
6711	109.3	454-3550-30.5
8294	113.4	455-3550-29.0
9684	131.5	455-3550-20.5

38 OZ. SP (65.816" SP)		
CFM	BHP	MODEL
693	12.8	351-3515-31.0
941	18.8	401-3550-31.5
1193	22.0	402-3550-30.5
1380	25.2	402-3550-31.0
1544	28.2	402-3550-31.5
1812	34.1	402-3550-32.5
2109	34.5	403.3550-30.0
2611	43.7	403-3550-31.0
2954	48.7	403-3550-31.5
3418	61.9	453-3550-31.5
4400	72.0	454-3550-29.0
5005	81.1	454-3550-29.5
5564	91.0	454-3550-30.9
6133	101.5	454-3550.30.5
7261	123.8	454-3550-31.5

40 OZ. SP (69.28" SP)		
CFM	BHP	MODEL
759	15.4	401-3550-31.0
939	19.4	401-3550-32.0
1145	22.2	402-3550-31.0
1335	25.4	402-3550-31.5
1680	32.0	402-3550-32.5
1820	35.1	402-3550-33.0
2080	35.2	403-3550-30.5
2590	44.7	403-3550-31.5
2849	49.8	403-3550-32.0
3144	56.8	453-3550-31.5
3695	70.2	453-3550-32.5
4200	72.0	454-3550-29.5
5010	90.0	454-3550-30.0
5536	93.4	454-3550-30.5
6114	104.4	454-3550-31.0
6701	115.9	454-3550-31.5

42 OZ. SP (72.744" SP)		
CFM	BHP	MODEL
749	15.8	401-3550-31.5
932	19.8	401-3550-32.5
1102	24.0	401-0550-33.5
1489	29.3	402-3550-32.5
1822	36.2	402-3550-33.5
2311	40.7	403-3550-31.5
2820	51.5	453-3550-81.5
3128	58.2	453-3550-32.0
3430	64.8	453-3550-32.5
4253	87.2	453-3550-34.0
5516	96.2	454-3550-31.0
6103	107.5	454-3550-31.5

44 OZ. SP (76.208" SP)		
CFM	BHP	MODEL
833	18.2	401-3550-32.5
1021	22.6	401-3550-33.5
1254	26.1	402-3550-32.5
1453	29.7	402-3550-33.0
1821	37.2	402.3550-34.0
2294	41.7	403-3550-32.0
2804	53.1	453-3550-32,0
3117	59.6	453-3556-32.5
3435	66.5	453-3550-33.0
4294	89.5	453-3550-34.5
4825	106.8	453-3550-35.5
5090	115.2	453-3550-36.0

46 OZ. SP (79.672" SP)		
CFM	BHP	MODEL
826	18.6	401-3550-33.0
1019	23.2	401-3550-34.0
1421	39.3	402-3550-33.5
1626	34.2	402-3550-34.0
2022	44.0	452-3550-34.0
2383	53.0	452-3550-35.0
2793	54.4	453-3550-32.5
3111	51.2	453-3550-33.0
3433	68.3	453-3550-33.5
4047	83.7	453-3550-34.5
4613	100.7	453-3550-35.5

48 OZ. SP (83.136" SP)		
CFM	BHP	MODEL
823	19.1	401-3550-33.5
1017	23.8	401-3550-34.5
1391	30.8	402-3550-34.6
1759	39.8	452-3550-34.0
2011	45.1	452-3550-34.5
2219	50.0	452-3550-35.0
2787	55.8	453-3550-33.0
3109	62.8	453-3550-33.5
3436	70.2	453-3550-34.0
4077	86.0	453-3550-35.0
4664	103.6	453-3550-36.0

50 OZ. SP (86.6" SP)		
CFM	BHP	MODEL
1017	24.5	401-3550-35.0
1356	34.4	451-3550-35.5
1730	40.5	452-3550.34.5
1987	46.0	452-3550-35.0
2220	51.4	452-3550-35.5
2850	57.0	453-3550-33.5
3122	64.6	453-3550-34.0
3445	72.2	453-3550-34.5
4109	88.6	453-3550-35.5
4417	97.4	453-3550-36.0

52 OZ. SP (90.064" SP)		
CFM	BHP	MODEL
918	22.6	401-3550-35.0
1127	28.8	451-3550.35.0
1473	38.7	451-3550-36.5
1704	41.4	452-3550-35.0
1964	47.0	452-3550-35.5
2433	58.2	452.3550-36.5
2800	60.0	453-3550-34.0
3121	66.5	453-3550-34.5
3458	74.4	453-3550-35.0
4143	91.2	453-3550-36.0

54 OZ. SP (93.528" SP)		
CFM	BHP	MODEL
1130	29.7	451-3550-35.5
1374	36.6	451-3550-36.5
1695	46.7	451-3550-38.0
1946	48.1	452-3550-36.0
2445	60.0	452-3550-37.0
2824	70.9	452-3550-38 0
3134	68.5	453-3550-35.0
3823	85.1	453-3550-36.0

56 OZ. SP (96.992" SP)		
CFM	BHP	MODEL
1135	30.6	451-3550-36.0
1382	37.7	451-3550-37.0
1718	48.4	451-3550-38.5
1931	49.3	452-3550-36.5
2455	61.8	452-3550-37.5
2861	73.4	452-3550-38.5
3499	79.1	453-3550-36.0

58 OZ. SP (100.456" SP)		
CFM	BHP	MODEL
1142	31.5	451-3550-36.5
1392	38.9	451-3550-37.5
1633	46.5	451-3550-38.5
1920	50.5	452-3550-37.0
2195	57.0	452-3550-37.5
2466	63.7	452-3550-38.0
2693	69.9	452-3550-38.5

60 OZ. SP (103.92" SP)		
CFM	BHP	MODEL
1151	32.6	451-3550-35.0
1276	36.3	451-3550-37.5
1404	40.1	451-3550-38.0
1652	48.1	451-3550-39.0
1912	51.8	452-3550-37.5
2191	58.5	452.3550-38.0
2474	65.5	452-3550-38.5

62 OZ. SP (107.384" SP)		
CFM	BHP	MODEL
1288	37.5	451-3550-38.0
1417	41.4	451-3550-38.5
1548	45.6	451-3550-39.0
1946	48.1	452-3550-39.5
2191	60.2	452-3550-38.5

64 OZ. SP (110.848" SP)		
CFM	BHP	MODEL
1301	38.7	451-3550-38.5
1432	42.8	451-3550-39,0
1565	47.1	451-3550-39.5

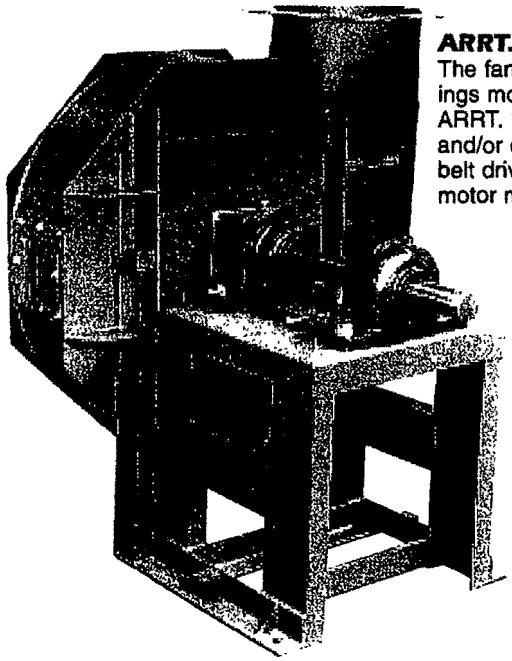

ARRT. 1
The fan wheel is overhung with both bearings mounted on a common pedestal. ARRT. 1 is suitable for high temperature and/or corrosive environment. Fan can be belt driven or directly coupled to drive motor mounted on a separate base.

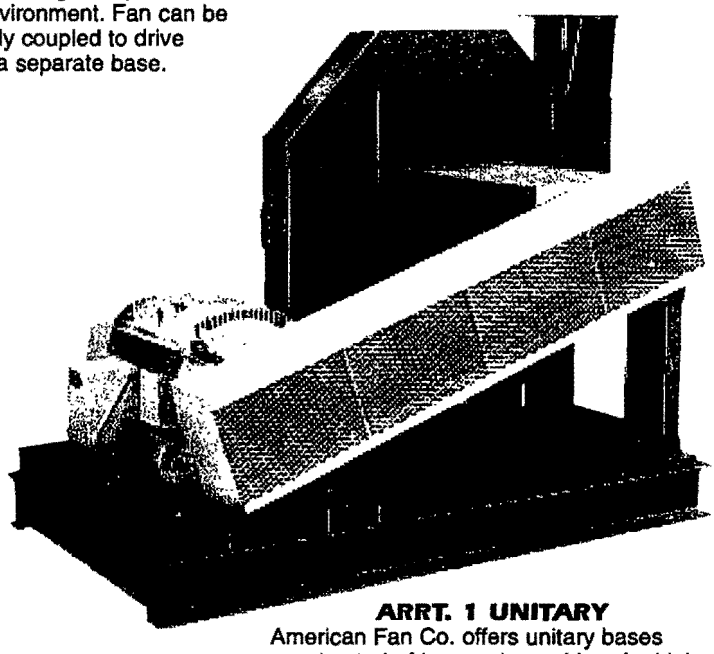

ARRT. 1 UNITARY
American Fan Co. offers unitary bases constructed of heavy channel iron for high horsepower or high temperature applications where ARRT. 9 is impractical. The unitary base design is a complete packaged unit simplifying handling and installation while providing a more uniform weight distribution necessary when vibration isolators are used. Unitary bases also allow excellent access for routine maintenance.

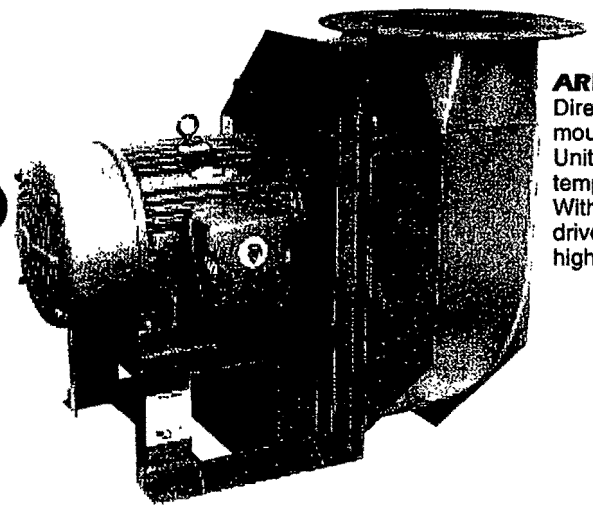

ARRT. 4
Direct drive fan with wheel mounted directly on motor shaft. Unit is designed for standard temperature applications only. With no belt loss, the direct drive fan operates at a higher efficiency.

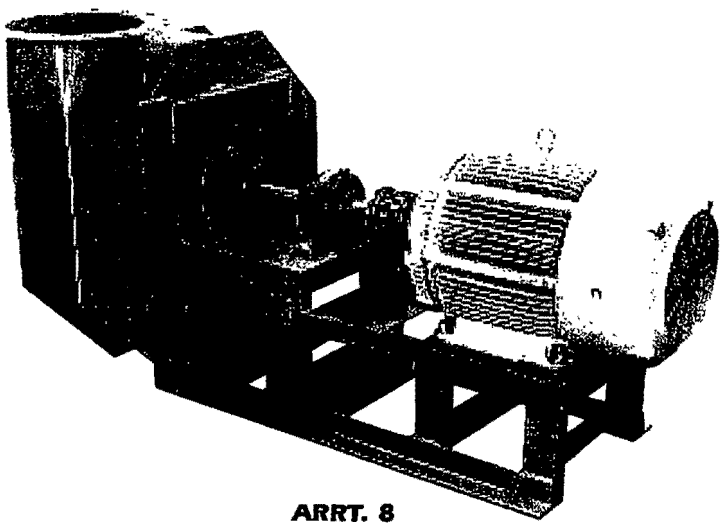

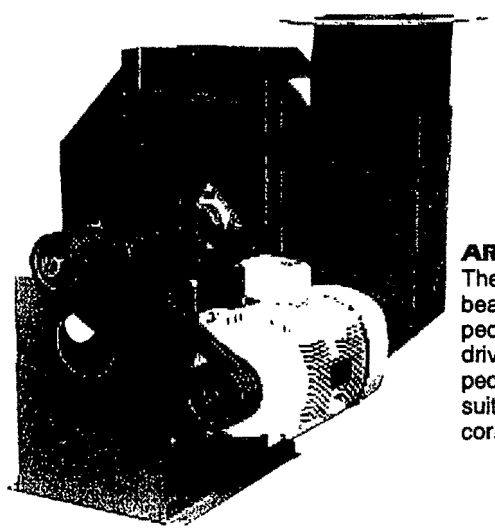

ARRT. 9
The fan wheel is overhung with both bearings mounted on a common pedestal. Fan is belt driven with drive motor mounted on bearing pedestal for a more compact unit suitable for high temperature and/or corrosive environment.

ARRT. 8
Direct drive fan through shaft and bearings. Efficiency of ARRT. 4 is maintained. However, ARRT. 8 may be used for high temperature and/or corrosive applications which requires the motor shaft to be outside of airstream.

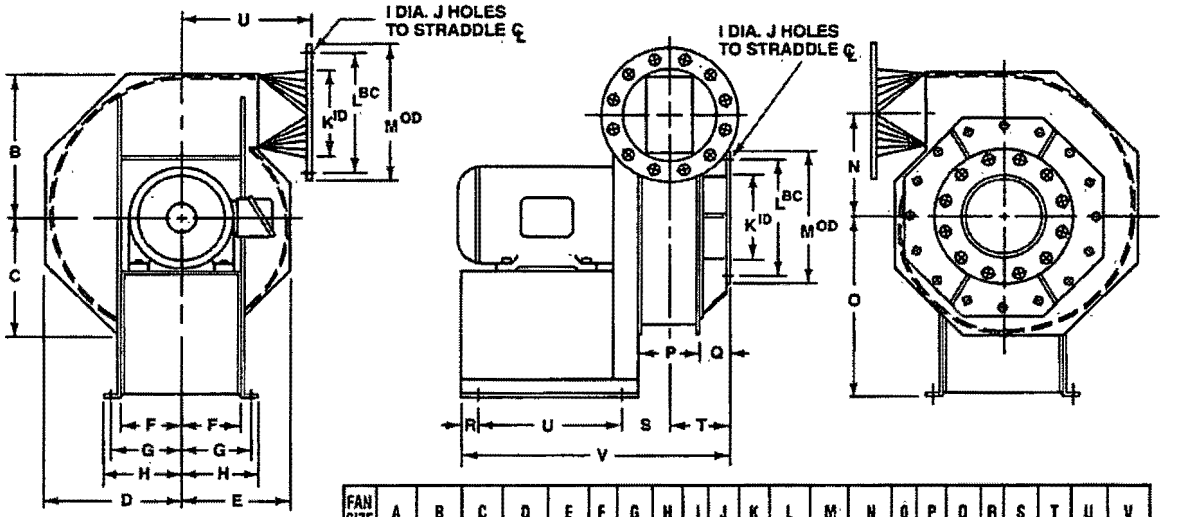

SIZES 251-355

FAN SIZE	A	B	C	D	E	F	G	H	I	J	K	L	M	N	O	P	Q	R	S	T	U	V
251	12½	13 15/16	13 3/16	13 7/16	12 3/4	6	7	8	⅜	8	5	8½	10	11 5/16	18	3¼	3¾	2	3⅛	5	12	22⅛
252	12½	14⅛	13½	13¾	12⅞	6	7	8	⅜	8	5	8½	10	11 5/16	18	3⅜	3¾	2	3 5/16	5 5/16	12	23
253	12½	13½	12¾	12 5/16	11 7/16	6	7	8	⅜	8	5	8½	10	11 5/16	18	3⅜	3⅜	2	3 5/16	5 5/16	12	23¼
254	12½	13 15/16	11⅝	12⅛	10¾	6	7	8	⅜	8	8	11¾	13½	10¼	18	5¼	3⅜	2	4⅜	6	12	24⅛
255	12½	14 5/16	11 5/16	13 5/16	10 5/16	6	7	8	⅜	8	8	11¾	13½	10 5/16	18	6⅜	3⅜	2	5 5/16	6 5/16	12	25¼
301	15	16½	15⅛	16 5/16	15 5/16	7	8	9	⅜	8	6	9½	11	13¾	21	3¾	3¾	2	3 5/16	5 5/16	17	27¾
302	15	16¾	15½	16⅛	14⅞	7	8	9	⅜	8	6	9½	11	13⅝	21	4	3⅜	2	4	5⅜	17	28⅛
303	15	16⅛	14¾	15⅞	14 5/16	7	8	9	⅜	8	6	9½	11	13 5/16	21	4¼	3⅜	2	4	5½	17	28½
304	15	16⅝	14½	15⅝	12⅝	7	8	9	1	12	10	14¼	16	12 1/16	21	5⅜	3⅜	2	4 5/16	6 5/16	17	30¼
351	17½	19 1/16	18 1/16	18 5/16	17 3/16	9	10	11	⅜	8	6	9½	11	16 3/16	26	3¼	3¾	2	3⅜	5¼	18½	29⅜
353	17½	18¾	17½	17 5/16	16¼	9	10	11	½	8	8	11¾	13½	15 1/16	26	4½	3⅜	2	4¼	5⅛	18½	30⅛
354	17½	19⅜	16 7/16	17⅞	15	9	10	11	1	12	10	14¼	16	14⅛	26	6⅜	3⅜	2	5⅜	6⅜	18½	32⅛
355	17½	19 5/16	16⅜	18⅜	14 1/16	9	10	11	1	12	12	17	19	14 15/16	26	8¼	3⅜	2	6⅛	7½	18½	34⅛

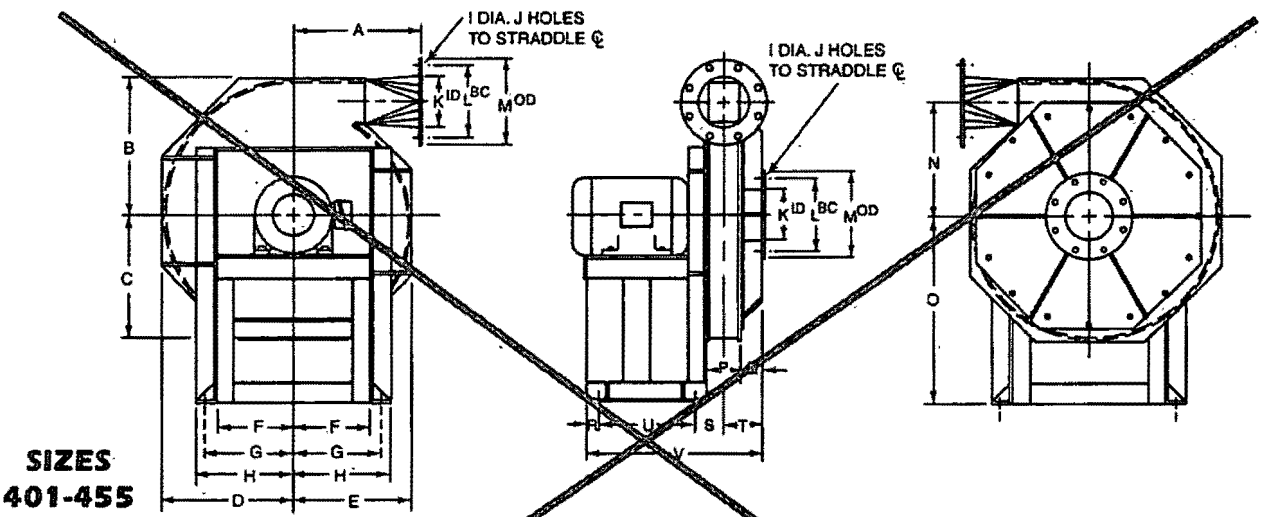

SIZES 401-455

FAN SIZE	A	B	C	D	E	F	G	H	I	J	K	L	M	N	O	P	Q	R	S	T	FRAME SIZE 254-T U	256-T V	324-TS U	324-TS V	326-TS U	326-TS V	364-TS U	364-TS V	404-TS U	404-TS V	405-TS U	405-TS V	444-TS U	445-TS V
401	20	21⅜	20½	21 7/16	19 3/4	12	13¾	15	⅞	8	8	11¾	13½	18½	29	4½	3½	2	4¼	5¾	15	26	16½	28½	18	30	19	31	21	33	24	36
402	20	21 5/16	20⅜	21⅛	19⅛	12	13¾	15	⅞	8	8	11¾	13½	18¼	29	4¾	3½	2	4⅜	5⅜	15	27¼	16½	28¼	18	30¼	19	31¼	21	33¼	24	36¼
403	20	21⅛	19⅝	20⅜	18⅝	12	13¾	15	⅞	8	8	11¼	13½	17¾	29	5¼	3½	2	4⅝	6⅛	15	27¼	16½	28¼	18	30¼	19	31¼	21	33¼	24	36¼
404	20	22⅛	18¾	20⅛	17	12	13¾	15	1	12	12	17	19	16 9/16	29	7⅛	3½	2	5⅝	7 1/16	15	29⅛	16½	31⅛	18	32⅛	19	33⅛	21	35⅛	24	38⅛
405	20	22¾	18¾	20¾	16¾	12	13¾	15	1½	12	14	18¾	21	16 15/16	29	9¼	3½	2	6¾	8¼	15	32	16½	33½	18	35	19	36	21	38	24	41
451	22½	24⅜	22⅛	23 7/16	22½	12	13¾	15	⅞	8	8	11¾	13½	20 5/16	32	4⅞	3½	2	4 7/16	5 5/16	15	27¾	16½	28⅞	18	30¾	19	31¾	21	33¾	24	36¾
452	22½	24⅜	22 1/16	23½	21¾	12	13¾	15	1	12	10	14¼	16	20⅜	32	5½	3½	2	4¾	6¼	15	28	16½	29½	18	31	19	32	21	34	24	37
453	22½	24	21 5/16	23	20 1/16	12	13¾	15	1	12	10	14¼	16	19 7/16	32	5¾	3½	2	4⅞	6⅜	15	28¼	16½	29¾	18	31¼	19	32¼	21	34¼	24	37¼
454	22½	24¼	21	22⅞	19⅛	12	13¾	15	1⅛	12	14	18¾	21	18 1/16	32	8	3½	2	6	7½	15	30½	16½	32	18	33½	19	34½	21	36½	24	39½
455	22½	25½	21	23¼	18¾	12	13¾	15	1⅛	16	16	21¼	23½	18 5/16	32	10⅝	3½	2	7 3/16	8¼	15	32⅛	16½	34⅛	18	35⅛	19	36⅛	21	38⅛	24	41⅛

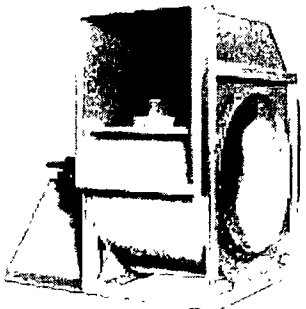

BACKWARDLY INCLINED AIRFOIL
18 Sizes from 1,000 to 93,000 CFM. Pressures to 17" WG. Write for Bulletin AS-0951.

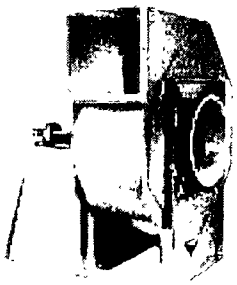

INDUSTRIAL EXHAUSTER
13 Sizes from 400 to 43,000 CFM. Pressures to 40" WG. Write for Bulletin E-0601.

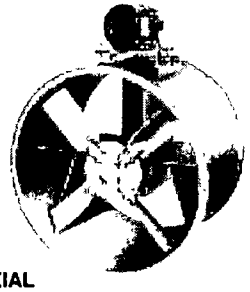

TUBE AXIAL
12 Sizes from 12" to 60" props. ¼ to 25 HP. 1,000 to 77,000 CFM. Adjustable pitch fan blades. Available in stainless steel, aluminum or special coatings. Write for Bulletin TA-1300.

TURBO-PRESSURE
9 Sizes from 400 to 3,000 CFM. 4 wheel types. Pressures to 55" WG. Write for Bulletin VP-0403.

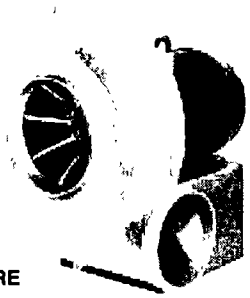

PRESSURE BLOWER
5 Sizes from ½ to 30 HP, 350 to 4,300 CFM. Pressures to 20" WG. Cast Aluminum construction. Write for Bulletin AF-0302.

PANEL EXHAUST FAN
Model PF-Direct Drive, Model PFB-Belt Drive. 9 Sizes from 12" to 60" dia. props. Air delivery to 72,000 CFM. Write for Bulletin PF-1401.

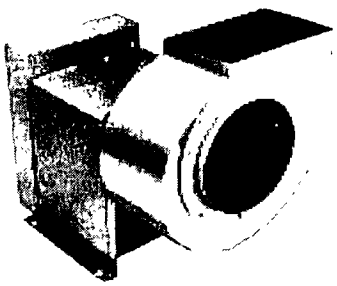

UTILITY SETS
Model SMB-Direct Drive or Belt Drive. 6 Sizes from 100 to 4,800 CFM. Pressures to 3" WG. Write for Bulletin SMB-1101.

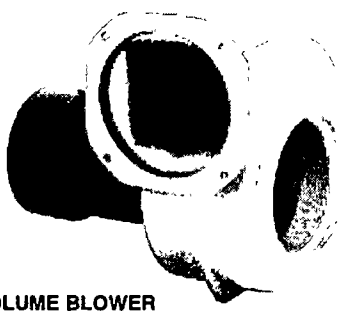

VOLUME BLOWER
Model SC-Direct Drive or Belt Drive. 4 Sizes from 100 to 1,400 CFM. Pressures to 4" WG. Write for Bulletin SC-1000.

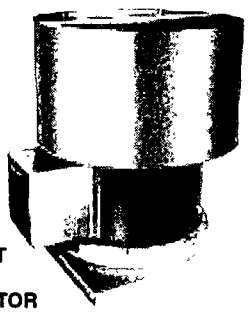

UPBLAST ROOF VENTILATOR
Model PR-Direct Drive, Model RVB-Belt Drive. 18" to 60" dia. Air delivery 2,000 to 77,000 CFM. Write for Bulletin RV-1501.

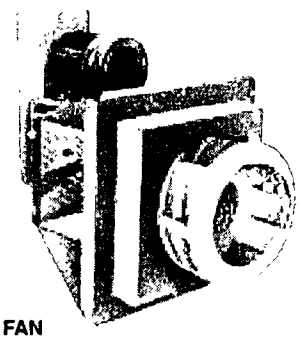

PLUG FAN
14 Sizes from 1,000 to 50,000 CFM. Pressures to 13" WG. Write for Bulletin PBCS-1201.

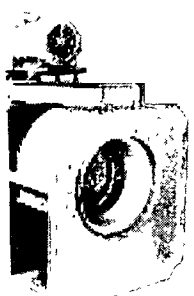

QBCA BACKWARDLY INCLINED AIRFOIL BLOWER
14 Sizes from 500 to 42,000 CFM. Pressures to 17" WG. Write for Bulletin AS-0951.

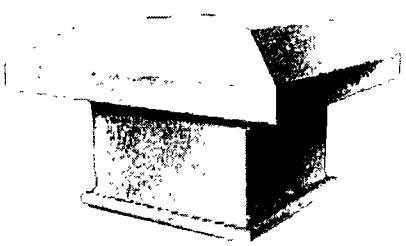

HOODED ROOF VENTILATOR
Intake, Filtered Intake and Exhaust Duty. 6 Sizes from 1,000 to 48,000 CFM. Write for Bulletin RV-1501.

REPRESENTED BY:

AMERICAN FAN COMPANY® & WOODS U.S.A. DIVISION

U.S. Sales office and factory:
2933 Symmes Road
Fairfield, Ohio 45014
Phone: 513-874-2400 Fax: 513-870-6249

www.amfan-woods.com

XXX2.5M/01/00/98060

LITHO IN U.S.A.

Radial Blade Pressure Blower Centrifugal

American Fan, US

Centrifugal Lines

¥ Radial Blade

Radial Blade Pressure Blower

- All welded construction
- Cost savings compared to P.D. Blowers
- ANSI 150# Pipe flange drilling
- Flanged inlet, outlet and Teflon shaft seal standard
- Gas tight construction option
- Rugged, channel iron motor and bearing base
- Pre-engineered for up to 700¡ Fahrenheit
- Market leader

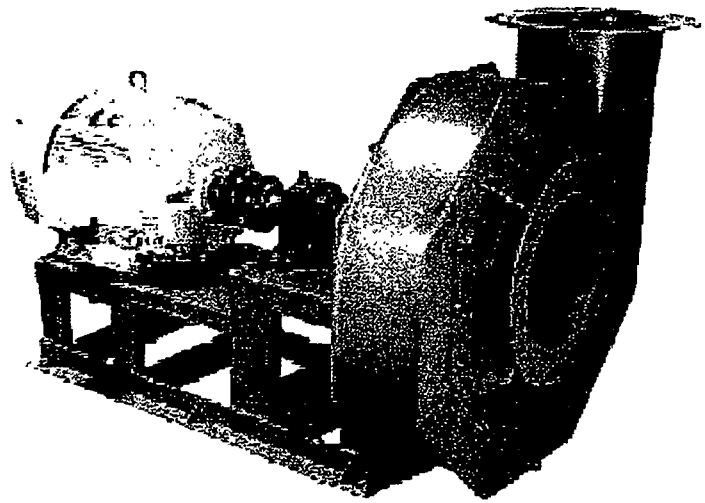

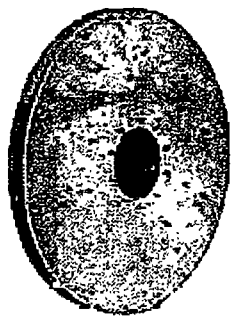

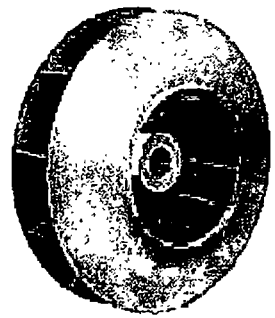

Features and Benefits

- Pressures to 110" SPwg, volumes to 11,700 CFM
- Multiple housing and wheel sizes
- Two-plane dynamically balanced wheels
- Available in stainless steel, aluminum and exotic metals for severe applications
- Heavy gauge, continuously welded housing

This print is the property of American Fan Co. It has been loaned for reference use only, and is not to be used for making the part(s) described unless a purchase order has been issued or authorization given in writing. It will not be copied, duplicated, or used in any manner detrimental to the interest of American Fan Co.

3rd ANGLE PROJECTION

INCHES FULL SIZE

DRIVE SIDE
RB-355 280TS CW-TH SHOWN

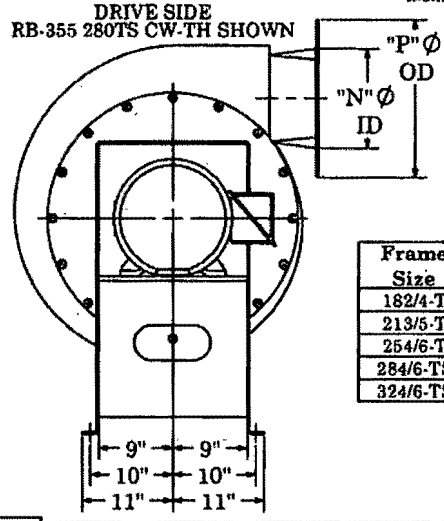

Frame Size	Maximum Overhang
182/4-T	N/A
213/5-T	N/A
254/6-T	1"
284/6-TS	4 1/2"
324/6-TS	7"

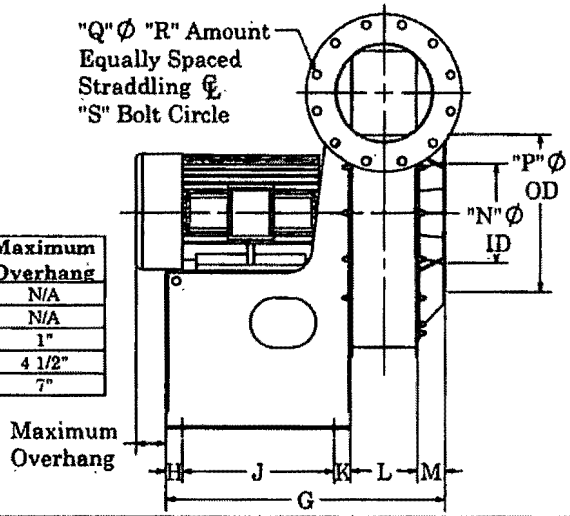

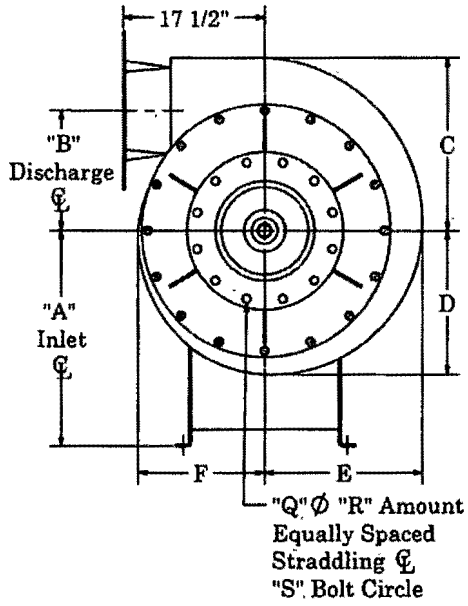

Rotation Viewed From Drive Side

CW-TH	CCW-TH
FIG. 1	FIG. 8
CW-TAU	CCW-TAU
FIG. 2	FIG. 9
CW-UB	CCW-UB
FIG. 3	FIG. 10
CW-BAU	CCW-BAU
FIG. 4	FIG. 11
CW-BH	CCW-BH
FIG. 5	FIG. 12
CW-DB	*CCW-DB*
FIG. 6	FIG. 13
CW-TAD	CCW-TAD
FIG. 7	FIG. 14

Fan Size	A	B	C	D	E	F	G	H	J	K
351	26	16 3/16	19 1/16	18 1/16	18 9/16	17 9/16	29 5/8	2	18 1/2	2
352	26	16 29/32	19 5/8	17 1/8	18 5/8	17 1/8	30 1/8	2	18 1/2	2
353	26	15 17/32	18 3/4	17 1/8	17 15/16	16 5/16	30 3/8	2	18 1/2	2
354	26	14 5/16	19 23/32	16 27/32	18 9/32	15 13/32	32 1/4	2	18 1/2	2
355	26	14 15/32	20 7/8	17 3/8	19 1/8	15 5/8	34 1/8	2	18 1/2	2

Fan Size	L	M	N	P	Q	R	S	T	U	** DB Discharge ** ** Availability **
351	3 3/4	3 3/8	6	11	7/8	8	9 1/2	3 7/8	5 1/4	YES
352	4 1/4	3 3/8	6	13 1/2	7/8	8	11 3/4	4 1/4	5 1/2	YES
353	4 1/2	3 3/8	8	13 1/2	7/8	8	11 3/4	4 1/4	5 5/8	NO
354	6 3/8	3 3/8	10	16	1	12	14 1/4	5 3/16	6 9/16	NO
355	8 1/4	3 3/8	12	19	1	12	17	6 1/8	7 1/2	NO

Fan Size	Frame Size	Total Unit Weight With Motor, Pounds	Point Load Weight Pounds Y	Z
351	182/4-T	500	213	37
	213/5-T	570	231	54
	254/6-T	660	235	90
	284/6-TS	796	243	155
	324/6-TS	970	266	221
352	182/4-T	502	216	35
	213/5-T	574	232	55
	254/6-T	664	242	90
	284/6-TS	798	247	152
	324/6-TS	976	259	229
353	182/4-T	488	207	37
	213/5-T	558	226	53
	254/6-T	650	234	91
	284/6-TS	782	239	152
	324/6-TS	962	250	231

Fan Size	Frame Size	Total Unit Weight With Motor, Pounds	Point Load Weight Pounds Y	Z
354	182/4-T	510	230	25
	213/5-T	580	244	46
	254/6-T	670	255	80
	284/6-TS	804	257	145
	324/6-TS	982	270	221
355	182/4-T	542	257	14
	213/5-T	612	275	31
	254/6-T	702	284	67
	284/6-TS	836	288	130
	324/6-TS	1014	299	208

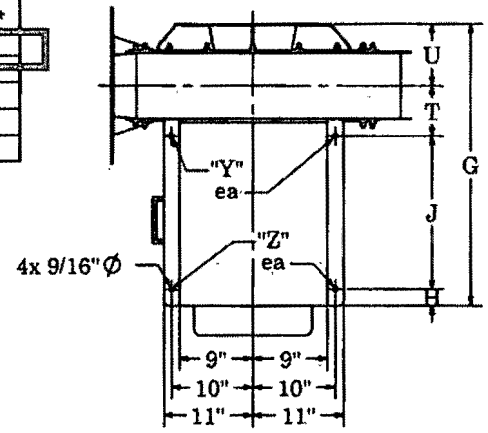

For Isolator Size And Location
See Drawing RBC4851F

AMERICAN FAN COMPANY
2933 SYMMES ROAD
FAIRFIELD, OHIO 45014
PHONE:(513) 874-2400
FAX:(513) 870-6249
WOODS U.S.A. DIVISION

TITLE:
RB 351 Thru 355 Arr't-4 180T Thru 320TS Standard Pressure Blower Fan Assembly Flanged Inlet And Outlet Rotatable And Reversible Housing

DATE: 02 DEC 02
DRAWN BY: J.BRUSMAN
CHECKED BY:
SCALE: 1 = 11
APPROVED BY:
Design-02

DRAWING NUMBER: **RBC4825F**
SHEET NUMBER 1 OF 1
REVISION LEVEL: 0

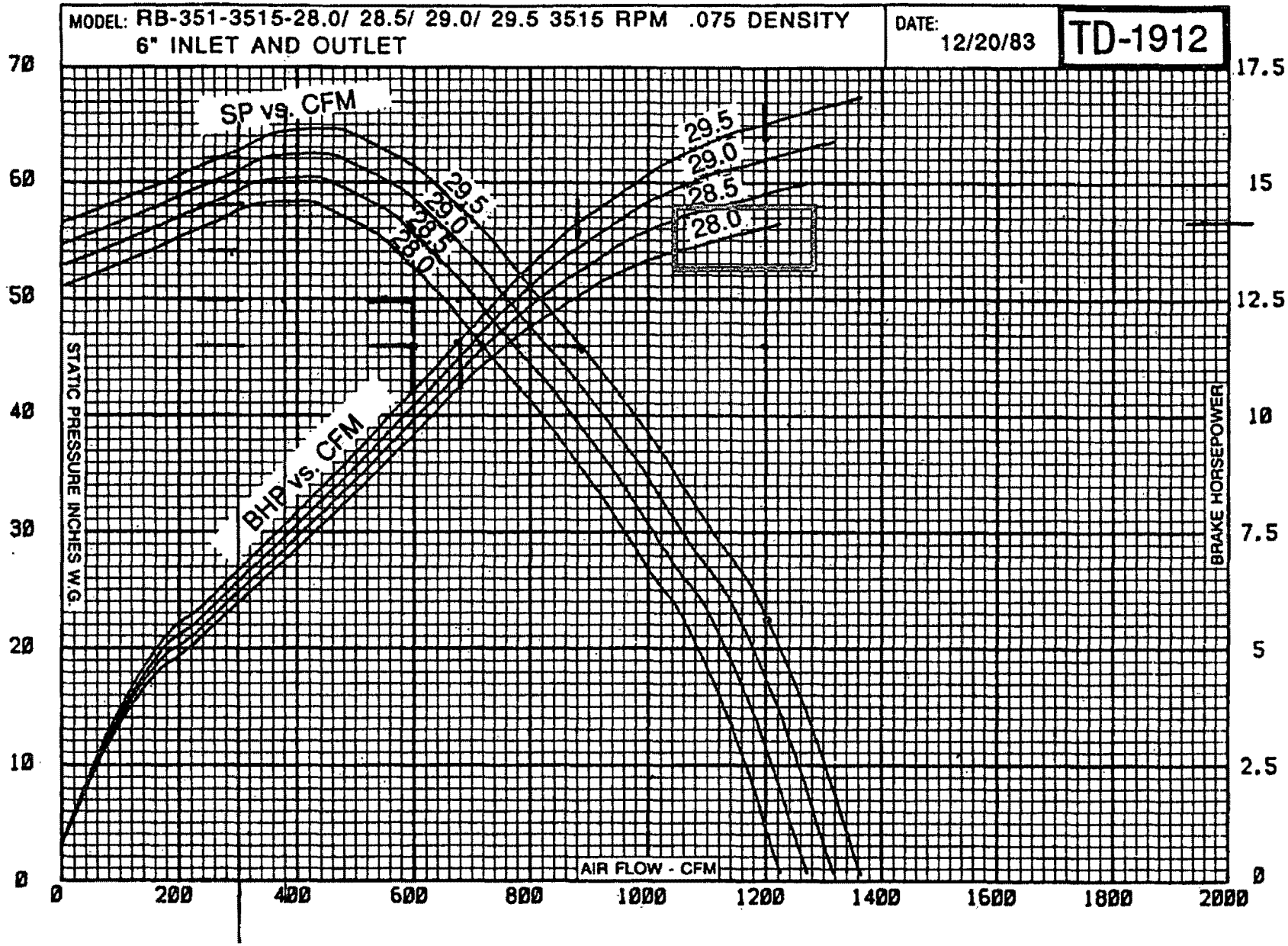
MODEL: RB-351-3515-28.0/ 28.5/ 29.0/ 29.5 3515 RPM .075 DENSITY
6" INLET AND OUTLET
DATE: 12/20/83
TD-1912
SP vs. CFM
BHP vs. CFM
29.5
29.0
28.5
28.0
STATIC PRESSURE INCHES W.G.
BRAKE HORSEPOWER
AIR FLOW - CFM
70
60
50
40
30
20
10
0
17.5
15
12.5
10
7.5
5
2.5
0
0
200
400
600
800
1000
1200
1400
1600
1800
2000

AMERICAN FAN COMPANY

5/23/2007
15:01:40

Selected : SIZE = RB-351-28
Wheel Diam = 28.0000 In
RPM = 3550
Density = 0.0750 Lb/CF
Width = 100.00%

CV-00000

	VOLU CFM	VOL @ 100.00% Width	Static Pressure In WG	Brake Power HP	PWR @ 100.00% Width	S.E.	DBA @ 5 Ft
1	1	1	51.551	0.515	0.515	1.59	107
2	125	125	54.071	3.709	3.709	28.67	104
3	249	249	56.845	5.254	5.254	42.38	107
4	375	375	59.110	6.799	6.799	51.14	106
5	500	500	57.549	8.344	8.344	54.13	104
6	625	625	52.684	9.890	9.890	52.29	107
7	749	749	45.544	11.435	11.435	46.86	110
8	875	875	37.822	12.568	12.568	41.32	110
9	1000	1000	28.489	13.495	13.495	33.14	110
10	1125	1125	17.779	14.010	14.010	22.42	110
11	1249	1249	0.031	14.422	14.422	0.04	110
12	1250	1250	0.020	14.423	14.423	0.03	110

Copyright © 2007 by American Fan Company - Fairfield, OH

Control # ENG016-0505

American Fan Company

2933 Symmes Road, Fairfield, Ohio 45014-2035
Phone: (513) 874-2400 Fax: (513) 870-6249

Service and Parts:
Phone: (513) 874-2400, Dial 2
Fax: (513) 874-3932
Service e-mail: service.usfao@flaktwoods.com
Parts email: parts.usfao@flaktwoods.com

AMERICAN FAN CO. INSTALLATION, OPERATION, AND MAINTENANCE MANUAL 0505

This general manual has been prepared to assist you in installing and maintaining your American Fan equipment. By following the general instructions presented, you will prolong the life of the equipment, while preventing unexpected downtime.

The scope of this manual covers our standard product line and is not intended to cover specially engineered equipment.

Table of Contents

Page No.	
	Section I
2	Receiving
2	Extended Storage
2	Handling
2	Installation (General)
3	Installation (Arrangement 8 Blowers)
	Section II
3	Before Start-Up
4	Start-Up
4	Balance and Vibration
4	Start-Up Of High Temperature Construction Fans & Blowers
	Section III
5	General Maintenance
5	Fan Bearing Maintenance
6	Motor Maintenance
7	Fan motors used with variable frequency drives
7	V-Belt Drive Maintenance
	Section IV
8	Vibration Level of Replacement Impellers
8	Problem Troubleshooting
9	Ordering Spare Parts
	Section V
10-12	Terms of Sale and Warranty

Section I

RECEIVING

All shipments are F.O.B. factory, Fairfield, Ohio. It is, therefore, in the interest of the buyer to carefully inspect all shipments before they are accepted from the freight carrier. Upon delivery, be sure that all items listed on the bill of lading and packing list (inserted in the plastic envelope attached to the shipment) have been received. Partial shipments are sometimes made.

Units are usually completely assembled except when specifications call for unit less motor. They are then skidded, boxed or crated to fully comply with rail or trucking requirements for shipment. Accessories are sometimes shipped separately due to handling space requirements.

Although all equipment is carefully inspected and prepared for shipment at the factory, damage to fan and/or drive parts may occur due to rough handling during shipment.

Any shortage, breakage or damage noticed at time of delivery should be indicated to the carrier's representative. Damage noticed after delivery should be reported to the carrier at once. Request their inspection of the shipment and fill out a concealed damage inspection report.

EXTENDED STORAGE

Units that will be held in storage for a period of up to two years, should have special provisions so operation-readiness can be maintained. Motors should be equipped with internal space heaters kept on continuously. Units should be crated and covered with polyethylene film. In addition, impellers should be hand-rotated once a month. For best results, keep units sheltered in a cool, dry location.

HANDLING

Small units should be handled carefully and lifted only by the base, **never** by the shaft, coupling, motor or housing. Large units should be lifted by the base or by lifting eyes. Precaution should be taken to avoid dropping or jarring equipment as this can cause damage to the shaft or wheel, which is not visibly noticeable, but can cause vibration problems.

INSTALLATION

Fans and motors should be mounted on structurally sound foundations. Concrete is the best, however, other types designed properly are acceptable. Equipment should be leveled on the foundation and shimmed or grouted in place. This will prevent putting the fan structure into a bind by bolting down on an uneven surface.

As a general rule, if vibration isolators are used, the fan should first be bolted to structural steel base and the isolation takes place between the structural steel base and the foundation. This prevents the fan base from floating due to uneven weight distribution and/or drive forces when mounted directly to vibration isolators.

ARRANGEMENT 8 BLOWER MOUNTING PROCEDURE

1. Motor and coupling should be mounted with blower resting on level, flat surface, but not bolted to surface.

2. After blower is situated in its final mounting location, feeler gauges should be used between mounting feet and mounting surface at each bolt hole location to determine thickness of shims required. Since the blower base is a weldment, it will be warped to some degree. If it is not shimmed to the foundation properly when bolted down, a bind in the frame will result. This may cause a bent shaft, coupling, motor and/or bearing misalignment resulting in high vibration levels and premature failure of drive components.

3. After shimming is done, each frame mounting bolt should be finger snugged. Then going from bolt to bolt, progressively tighten each one with a torque wrench until the proper torque value is achieved for the size foundation bolt being used.

4. After the unit is completely tightened down to foundation, coupling alignment should be rechecked. If coupling is now mis-aligned, loosen foundation bolts and recheck coupling alignment. If after loosening foundation bolts, coupling is aligned, then a bind was introduced in the bolt-down procedure. It will then be necessary to re-shim so that the bind is no longer present.

5. Once the unit is tightened down to foundation and coupling alignment is maintained, replace guards and check duck work, etc. Unit is now ready for start-up.

6. Jog motor to make sure unit is rotating in proper direction. If so, bring up to speed and check amperage to motor to make sure enough static pressure is present in system to prevent motor from overloading.

7. Vibration levels should be checked and if they are above values shown in table on page 4, a qualified balancing technician should trim balance the unit to achieve these levels.

Section II

BEFORE START-UP

1. Fasteners – all foundation bolts, wheel hub setscrews, wheel locking bolts and bearing locking collars must be tight.
2. Bearings - check bearing alignment and make certain they are properly lubricated.
3. Fan Wheel – turn over rotating assembly by hand to see that it runs free and does not bind or strike fan housing. If wheel strikes housing the wheel may have to be moved on the shaft or the bearing pillow blocks moved and re-shimmed.
4. Motor – check electrical wiring to motor. The current characteristics of the supply line must agree with the motor nameplate rating. Motor should be wired and fused in accordance with the National Electric Code and local codes.
5. V-belt drive must be in alignment with belts at proper tension.
6. Duct connections (if required) from fan to duct work must not be distorted. Ducts should never be supported by the fan. Expansion joints between duct connections should be used where expansion is likely to occur or where fan is mounted on

vibration isolators. All duct joints should be sealed to prevent air leaks. All debris should be removed from ductwork and fan.

START UP

1. "Jog" the motor to check for proper wheel rotation. The motor should be started in accordance with the manufacturer's recommendations. Arrows on fan indicate the proper direction of rotation and airflow.

2. Fan may now be brought up to speed. Watch for anything unusual such as vibration, overheating of bearings and motor, etc. Check fan speed on V-belt driven units and adjust motor sheave (on adjustable drives) to give desired RPM.

3. Check motor amperage against nameplate amperage to make sure motor is not overloading.

BALANCE AND VIBRATION

All fan impellers are dynamically balanced prior to installation in the fan assembly. After assembly, fans supplied with motors are test run and fine-tune balanced to reduce vibration levels to acceptable limits as shown in table below (from AMCA Standard 204-96). After field installation, fans will need to be checked prior to commissioning, to assure that the vibration levels do not change significantly from those achieved at the factory. It is recommended that the velocity values in the table below are not exceeded by more than 10% when field installed.

Fan Application Category	**Rigid Mounted**		**Flexible Mounted**	
	mm/sec.	(in./sec.)	mm/sec.	(in./sec.)
BV-3	3.8	(0.15)	5.1	(0.20)

The installed vibration level of any fan is not solely dependent on the balance grade. Installation factors such as the mass and stiffness of the supporting system, will influence the "as installed" vibration level (Refer to AMCA Publication 202, ***Troubleshooting***). Therefore, the "as installed" fan vibration level is not the responsibility of the fan manufacturer unless specified in the purchase contract.

START-UP OF HIGH TEMPERATURE CONSTRUCTION FANS AND BLOWERS

In addition to normal start-up procedure described above, certain measures must be taken against thermal expansion deformation.

1. Fan or blower should be brought to speed between 40°F and 150°F. It may be necessary to throttle back air entering fan or blower and slowly bleeding in heated air to accomplish this. (Note: If motor horsepower is sized for high temperature operation condition and not cold start-up, throttling inlet air will be mandatory to prevent motor overloading. It is recommended motor amperage be monitored during this procedure.

2. The maximum recommended rate of temperature rise is 15°F per minute.

3. The reverse situation of fan or blower shut-off also applies. That is the temperature must be lowered slowly before turning fan or blower off to prevent damage.

Section III

GENERAL MAINTENANCE

1. A definite time schedule for inspecting all rotating parts and accessories should be established. The frequency of inspection depends on the severity of operation and the locality. Inspections might be weekly at first in order to set up the schedule.

2. Alignment – shaft must not be cocked in the bearings. Misalignment can cause overheating, wear to dust seals, bearing failure and vibration.

3. Hardware – check tightness of all bolts and setscrews.

4. Lubrication – check fan and motor bearings and add lubricant if necessary. Be careful not to over grease as this can damage bearing seals.

5. Air flow – make sure there is no debris and no unnecessary obstructions to airflow in outlet or inlet ductwork.

6. Bearings on high-speed fans tend to run hot. Therefore, do not replace a bearing because it feels hot to the touch. Place a pyrometer or contact thermometer against the pillow block and check the temperature. Pillow block and flange mount bearings can have housing surface temperatures of 200°F (93°C) before the cause of overheating be investigated.

7. Wheel- inspect wheel blades for accumulation of dust and dirt. Clean thoroughly with stream of water jet, compressed air or a wire brush. This will help prevent an unbalanced condition. If blades are aluminum, be careful not to damage them. Cover the bearings so water won't enter the pillow block. The wheel should have proper clearances to prevent the blades from striking the housing. Make sure wheel is rotating in proper direction. Never run the fan at a higher speed or temperature than is shown on the fan nameplate. Contact American Fan Company with any questions.

FAN BEARING MAINTENANCE

For most applications, a lithium base grease (such as Mobilith AW2) conforming to a NLGI grade 2 consistency should be used. This type of grease inhibits rust, is water resistant, and has a temperature range of -30°F to 200°F with intermittent highs of 250°F. For extreme duty and higher temperature applications, use Mobilith SHC220, synthetic hydrocarbon grease.

Because oil lubricated bearings are usually used on high-speed or high temperature applications, refer to American Fan Co. factory for the type of oil you should use in your particular application.

When greasing bearings, it is important not to overgrease. This is especially true if the bearings are equipped with extended grease lines and the bearings are not visible. In this case, more bearing failures occur due to overgreasing than undergreasing. It is best to give the bearing just one "shot" of grease periodically if the bearings are not visible.

When the bearings are visible, pump in grease until a small bead of grease forms around the bearing seals. It is very important that fan bearing greasing take place while

the fan is operating. Caution should be taken while working on and near rotating equipment to avoid personal injury.

When oiling oil-lubricated bearings, oil should be poured into cup at top of bearing until it reached the overflow point at the lower oil cup.

MOTOR MAINTENANCE

Lubricate motor bearings to the manufacturer's recommendations. Lubrication recommendations are included with the packet attached to the fan. Should this packet be missing, the following will apply:

A. Fractional Horsepower Sleeve Bearing Motors:
Under normal operation at ordinary temperatures and clean surroundings, these motors will operate for three years without re-lubrication. Then lubricate annually with electric motor oil or SAE 10 oil. Under continuous operation higher temperatures (but not to exceed 104°F ambient) re-lubricate annually.

B. Fractional Horsepower Ball Bearing Motors:
Under normal conditions, ball bearing motors will operate for five years without re-lubrication. Under continuous operation at higher temperatures, (but not to exceed 104°F ambient) re-lubricate after one year. To re-lubricate where motors are not equipped with pressure fittings, disassemble motor and clean the bearings thoroughly. Repack each bearing one-third full with ball bearing grease.

C. Integral Horsepower Ball Bearings Motors:
Motors having pipe plugs or grease fittings should be re-lubricated while warm and at standstill. Replace one pipe plug on each end shield with grease fitting. Remove other plug for grease relief. On low pressure, grease, run and lubricate until new grease appears at grease relief. Allow motor to run for ten minutes to expel excess grease. Replace pipe plugs. Motors not having pipe plugs or grease fittings can be re-lubricated by removing end shield, cleaning grease cavity and refilling three-fourths or circumference of cavity.

Recommended re-lubrication intervals (General guide only)

H.P Range	Standard Duty 8 Hr./Day	Severe Duty 25 Hr./Day Dirty-Dusty	Extreme Duty Very Dirty High Ambients
1 ½ - 7 ½	5 Yrs.	3Yrs.	9 Mos.
10 – 40	3 Yrs.	1 Yr.	4 Mos.
50 – 150	1 Yr.	9 Mos.	4 Mos.

Recommended Motor Greases
Polyrex EM – Exxon Oil Company
SRI #2 – Chevron Oil Company

FAN MOTORS USED WITH VARIABLE FREQUENCY DRIVES

The following applies to the use of variable frequency drives when used with fan motors:

1. Specify "Inverter Duty Motors" whenever possible. If this is not practical, premium efficiency motors *must* be specified.
2. Specify motors with inverter spike resistant magnet wire when possible.
3. Specify insulated bearings or provide shaft grounding to prevent shaft currents from causing bearing damage and premature failure. This is critical on motors that are 50 HP and larger since the cost of downtime and bearing replacement is typically much greater on larger motors, than the initial cost of one of these preventative measures.
4. Specify the same manufacturer for both the motor and variable frequency drive, if possible, for single-source responsibility.
5. A load reactor should be installed in series in the power leads between the VFD and the motor, located as closely as possible to the VFD. This is an inexpensive preventative measure, especially if the VFD is more than 75 feet from the motor.
6. The switching frequency of the IGBT's in the VFD should be kept as low as practical to prevent higher temperatures in the motor and the VFD. However, lower switching frequencies cause higher noise levels in the motor. Therefore, the application noise level versus the higher temperature must be carefully weighed. Generally, 2.5 Khz is optimal.
7. Good industrial wiring practices meeting local and national electric codes must be followed.
8. It is best to limit the minimum frequency to the motor to 10 Hz or more for extended periods of time.

Note: These are general recommendations only. As each application is different, you must consult the motor and drive manufacturer for specific requirements as they apply to your installation.

WARNING! Shaft currents are phenomena created by the interaction between motors and variable frequency drives that can cause premature motor bearing failures. The occurrence of shaft currents is common and cannot be predicted. American Fan Company has experienced many motor bearing failures that have been positively identified as 'shaft current' problems due to the distinctive failure pattern seen in the failed bearings.

American Fan Company recommends the adoption of the above list of design constraints for any fan/motor/VFD combination. Regardless if any or all precautions are taken, American Fan Company accepts no responsibility for shaft current related motor bearing failures and will extend only the warranties of the motor and/or variable frequency drive manufacturer (when supplied by American Fan Company). Further, American Fan Company will not be held liable for any consequential damages under any circumstances resulting from premature bearing failures due to shaft currents.

V-BELT DRIVE MAINTENANCE

If belts squeal at start-up, they are too loose and should be tightened. Periodically check belt and sheave wear, alignment, and tension. When belts show wear, replace all belts at once with a new matched set of belts. New belts will not work properly in conjunction

with used belts due to difference in length. Belts and sheaves should be clean and free from grease. After installing new belts, check tension midway between sheaves. Belts

should deflect about 1/64" per inch of span length with approx. 20-lb. force. Allow unit to run for 4 – 6 hours, then it will be necessary to re-tighten belts again because new belts tend to stretch initially.

Section IV

VIBRATION LEVEL OF REPLACEMENT IMPELLERS

All replacement impellers are dynamically balanced at our factory prior to shipment. Occasionally, an impeller that has been factory-balanced will yield poor balance/vibration results when installed and operated. This does not mean that the impeller was incorrectly balanced at the factory. It can result from differences between test-stand conditions and operating conditions. A factory test stand has different bearings, bearing spans, structural response, stiffness, mechanical impedance, and by necessity, running speed. The test stand cannot duplicate the actual "fan system" and its response. For these reasons, the "fan system" vibration levels must be checked after installing a replacement impeller. Refer to page 4 for acceptable vibration levels.

PROBLEM TROUBLESHOOTING

In the event that trouble is experienced in the field, listed below are the most common fan difficulties. These points should be checked in order to prevent needless delay and expense of factory service.

1. CAPACITY OR PRESSURE RATING
   A. Total resistance of system higher than anticipated.
   B. Speed too low.
   C. Dampers or variable inlet vanes not properly adjusted.
   D. Poor fan inlet or outlet conditions.
   E. Air leaks in system.
   F. Damaged wheel.
   G. Incorrect direction or rotation.
   H. Wheel mounted backwards on shaft.

2. VIBRATION & NOISE
   A. Misalignment of bearings, couplings, wheel, or V-belt drive.
   B. Unstable foundation, fan bolted to uneven foundation, not shimmed or grouted.
   C. Foreign material in fan causing unbalance.
   D. Worn bearings.
   E. Damaged wheel or motor.
   F. Broken or loose bolts and setscrews.
   G. Bent shaft.
   H. Worn Coupling.
   I. Fan wheel or driver unbalanced.
   J. 120 cycle magnetic hum due to electrical input. Check for high or unbalanced voltage.
   K. Fan delivering more than rated capacity.
   L. Loose dampers or variable inlet vanes.

M. Speed too high or fan rotation in wrong direction.
N. Vibration transmitted to fan from some other source.

3. OVERHEATED BEARINGS
   A. Too much grease.
   B. Poor alignment.
   C. Damaged wheel or driver.
   D. Bent shaft.
   E. Abnormal end thrust.
   F. Dirt in bearings.
   G. Excessive belt tension.

ORDERING SPARE PARTS

Service and Parts:
Phone: (513) 874-2400, Dial 2
Fax: (513) 874-3932
e-mail: greg.robinson@flaktwoods.com
mike.niehaus@flaktwoods.com

Contact the local American Fan Co. sales representative or AFC Service and Parts Department and supply the following information:

1. Fan serial number stamped on nameplate.
2. Fan code and model stamped on nameplate.
3. Fan arrangement.
4. Description of part required.
5. Part number if part is a casting.
6. Special materials, paints or coatings.

WHEEL – Be sure to indicate direction of rotation as viewed from drive side, type of wheel and the operating speed.

SHAFT – Length and diameter.

MOTORS – The name of the motor manufacturer, motor model number, and serial number from the motor nameplate must be supplied to the factory for repairs or replacement.

BEARINGS – The following information should be indicated when ordering various types of bearings:

ANTI-FRICTION BEARINGS
1. State whether ball or roller.
2. Manufacturer.
3. Size and number.
4. Fixed or floating.

RECOMMENDED SPARES:
1. V-belts on V-belt driven fans.
2. Fan bearings
3. Wheel (s)
4. Motor (if blower is critical to your operation).

Section V

AMERICAN FAN COMPANY TERMS OF SALE AND WARRANTY

1. **Authority of agents:** No order or contract shall be binding upon us unless signed by an authorized employee of the company. Sales representatives and other agents are not authorized to bind us. Unless a statement representation or guarantee made by an agent is specifically provided for herein, it shall not constitute a warranty or be part of this contract. Typographical errors contained in the quotation or invoice are not binding.

2. **Acceptance, exclusive terms:** Our quotations are subject to acceptance within thirty (30) days from the date of quotation. Acceptance of our quotation includes acceptance of our terms, including those contained herein, which constitute the complete and exclusive contract between the parties. We do not accept any additional or different terms proposed by the buyer's acceptance of this offer. Our failure to specifically object to additional or different terms included in the buyer's acceptance shall not be deemed a waiver of exclusivity of our terms. This agreement may not be modified except by prior written agreement signed by an authorized employee. No course of performance, usage of trade or course of dealing may be used to supplement or explain the terms of this agreement or the obligations and rights of the parties hereunder.

3. **Seller's performance:** We shall not be held responsible for any loss, delay, failure to deliver or damage caused by reasons beyond our control, including but not limited to: our inability to obtain labor, materials, fuel or supplies; fire, accidents, floods or adverse weather conditions; strikes, lockouts or other labor disputes; embargoes, governmental acts or requirements; wars, acts of terrorism, insurrections or riots, or actions of subcontractors.

4. **Payment:** Net payment is due of the invoiced amount (hereinafter "Contract Price") and shall be paid in cash or check only within thirty (30) days F.O.B. our factory unless otherwise specified in our quotation.
   (a) Inadequate shipping instructions: If we are unable to ship the goods when ready due to your (or your representative's) instructions or lack of instructions, invoicing will be submitted and payment in full shall be due within thirty (30) days of notification that we are ready to ship.
   (b) Set-off: No retention, set-offs or counterclaims may be exercised against our invoices without prior written authorization.
   (c) Late payment charges: We shall be entitled to charge interest on overdue accounts (in addition to storage charges referred to below) at the rate of 2% per annum above the prime rate for any amount overdue and unpaid. Overdue accounts will also be charged reasonable costs of collection, including attorney fees to the extent permitted by the laws of the State of Ohio.

5. **Price:** Our quotation only includes such goods, services, accessories, and work as specified therein, unless otherwise specified in our quotation:
   (a) Packaging: Packing in accordance with our current standards is included in our quoted price; otherwise, packing charges will be added to the invoice price.
   (b) Samples: Any samples submitted to you and not returned to our factory within sixty (60) days from date of receipt shall be paid for by you.
   (c) Taxes: All applicable taxes will be added to the invoice price unless we receive your signed Tax Exempt Certificate.
   (d) Shipping: Our quotations do not include shipping. If you request delivery other that F.O.B. our factory, you will be charged extra for any shipping, handling, loading and/or insurance.
   (e) Storage: If we do not receive adequate forwarding instructions within thirty (30) days after notice to you that the goods are ready for collection or that we are ready to ship, we are entitled, but not obligated, to arrange storage at your sole expense (including storage, handling, demurrage and insurance).
   (f) Alteration of: This Quotation/Job does not include alterations to buyer's premises, electrical or other utilities required to install the equipment provided here under.

6. **Price escalation:** We reserve the right to adjust the Contract Price if we incur extra costs due to changes or delays caused by you or your agents including, but not limited to, inadequate or improper instructions, designs or specifications. We reserve the right to adjust the Contract Price if we incur extra costs due to governmental acts, which affect performance of our obligations under contract.
   (a) Our equipment: Prices on equipment of our manufacture are firm for shipments to be made within one hundred twenty (120) days from date of order. [After one hundred twenty (120) days, prices will be adjusted in accordance with increases in the cost of labor, materials and overheads. The increase will be calculated by the FORMULA FOR CONTRACT PRICE ADJUSTMENT specified in our quotation. Or, after one hundred twenty (120) days, prices will be adjusted to our prices in place at the time of shipment.]
   (b) Supplier equipment: Prices on equipment of our manufacture are subject to adjustment by the same percentage of price change as may be made effective by our supplier prior to shipment of the equipment to you.

7. **Shipping:** Unless otherwise agreed, equipment shall be delivered F.O.B. our factory. We are authorized, but not required, to arrange shipping at the buyer's sole cost, by common carrier. For goods to be exported outside the continental United States, we are authorized, but not required, to arrange shipment, at the buyer's sole cost, from our factory alongside a vessel named by you at the port stated on our quotation. This clause does not affect the risk of loss or other incidents of the sale. Our obligations are deemed fulfilled and the risk of loss shifted to the buyers as soon as conforming goods are delivered to a common carrier or to the customer in the event that no common carrier is involved.

8. **Delay in Shipping:** Lead times quoted for shipping are estimated and we are not responsible for any losses resulting from delays. If we specifically agree in writing to a fixed time for shipment, we are not liable for damages caused by delay unless we have also specifically agreed in writing to a liquidated damages clause. In that event, our liability is limited to the amount of the agreed upon liquidated damages or the losses directly caused by our delay, whichever is less. A fixed time period for shipment does not start until we receive a written order with all information necessary to proceed with the job, including, but not limited to, your acceptance and approval of our specifications and drawings, licenses and government approvals, and arrangements for payment which meet our satisfaction. We are not responsible for delays caused by any reason in paragraph (3) above or caused by your instruction or lack thereof. No agreement for a fixed time for shipment is binding on us unless accompanied by an agreed upon liquidated damage clause, signed by an authorized employee.

9. **Cancellation:** Contracts and purchase orders may not be canceled without our prior written consent. You will be subject to cancellation charges. Cancellation charges include the amount necessary to compensate us for all materials ordered and work performed prior to the date of termination, lost profits and reasonable overheads and any other expenses resulting from the cancellation. Payment of all cancellation charges shall be made within thirty (30) days of the date of the invoice itemizing such charges.

10. **Drawings, samples, models and other descriptions:** Descriptive materials do not constitute a warranty that the goods shall conform to the description, and are not part of this contract. All descriptive materials including, but not limited to shipping models, catalogs, price-lists and other advertising materials are for illustrative purposes only. Unless drawings have been approved, we reserve the right at any time to change without notice the design, construction or specification of any equipment, machinery or system provided the revisions do not prejudice the operation of the equipment.

11. **Product Performance:** All performance figures given by us are approximate and are based on our laboratory experience and you agree that we accept no liability in the event of failure to achieve such performance figures. The figures only reflect performance we expect to obtain in our laboratory when tested to the relevant Air Movement and Control Association (AMCA) standards with test and tolerances detailed in our current technical literature. You assume responsibility for your own system design and for the goods being sufficient for your purpose. We will accept neither responsibility nor liability for the performance or suitability of our goods in their final operating environment, whether or not details of the final operating environment have been made available to us. We are not responsible for any performance curves that have been altered. If we specifically agree in writing to guarantee performance, we are only responsible for proven performance deficiencies if, and to the extent, we have agreed in writing to a liquidated damage clause which shall not in any event result in our incurring liability in excess of the Contract Price. No performance guarantees are binding on us unless in writing and signed by an authorized employee.

12. **Inspection and tests:** Our products are subjected to standard quality control inspection procedures before shipping. Standard inspections proceed without notice to you unless you request otherwise. If you require other tests, personal inspection, or that test/inspections be conducted in your presence, you will be charged extra. Any special inspections or tests shall be at our factory and will be made within seven (7) days after we give you notice that the equipment is ready for shipment. Failure to inspect the equipment at this time shall constitute a waiver of your right of inspection. Acceptance of goods occurs when (a) after inspection, you signify to us that the goods are conforming or (b) you fail to timely exercise your inspection right in accordance with this paragraph.

13. **Subcontracting:** We reserve the right to sub-contract the fulfillment of any contract or part thereof.

14. **Governing Law:** The parties acknowledge that the transaction that is the subject matter of this agreement bears a reasonable relation to the State of Ohio and that this agreement shall be governed by the laws of the State of Ohio, including the Uniform Commercial Code as enacted in that State. It is specifically understood and agreed that this agreement is for the sale of "goods" as that term is used in the Uniform Commercial Code.

15. **Severability:** The invalidity or unenforceability of any one or more phrases, sentences, clauses, paragraphs, or sections contained in this agreement shall not affect the validity or enforceability of the remaining portions of this agreement.

16. **Provisions requiring notice:** Any notice provided pursuant to this agreement shall be in writing and shall be deemed given (i) if by hand delivery, telecopy or e-mail upon receipt thereof; (ii) if mailed to the most recent address, three (3) days after deposit in the U.S. mails with prepaid postage or certified mail return receipt requested.

17. **Assignment:** You may not transfer your rights or delegate your performance under this agreement whether by assignment, subcontract, merger, reorganization, operation of law, or otherwise, without the prior written consent of an authorized employee.

18. **No Waiver:** The waiver or failure of American Fan to exercise any right provided herein shall not be deemed a waiver of any further or other right hereunder.

19. **Limited Warranty:** We warrant equipment of our manufacturer to be free from defects in design, materials and workmanship (exclusive of abrasion, corrosion or erosion) for twelve (12) months from the date of receipt of notice that the goods are ready for shipment or from the date of shipment to the original purchaser, whichever comes first. In order to claim the benefit of this warranty you must notify us in writing of the claimed defect within ten (10) days after discovering it and return the equipment or parts to our factory with transportation prepaid. In the event of on-site repair, our service technician will not be dispatched until we receive your written purchase order. This warranty in not applicable if any of the following conditions exist.
    (a) You have operated the equipment outside the scope of the specifications.
    (b) You have permitted other persons not approved or authorized by us to alter, adjust, replace, or repair the equipment or any part thereof.
    (c) You have not followed instruction or other directions given in the contract documents or our maintenance manual.
    (d) When breakage or other loss or damage is the result of any negligence, misuse or fault on the part of any operator or other person not under our supervision or control.
    (e) When breakage or other loss or damage is the result of fire, lightning, or other casualty or of factors extemal to the equipment.
    (f) The defect is the result of designs or drawings made, furnished or specified by you.
    (g) The defect is attributable to goods not of our manufacture but supplied by us as part of a contract, in which case our liability shall be the lesser of the supplier's liability to us or any liability we would have for warranty on our own equipment.
    (h) You have not paid in full any invoices submitted to you, which are due for payment.
    (i) In the event of fair wear and tear of the equipment.

THIS WARRANTY IS IN LIEU OF ANY OTHER EXPRESS OR IMPLIED WARRANTIES, INCLUDING ANY IMPLIED WARRANTY OF MERCHANTABILITY OR FITNESS FOR ANY PARTICULAR PURPOSE. OUR SOLE AND EXCLUSIVE OBLIGATION UNDER THIS WARRANTY IS TO REPAIR OR REPLACE DEFECTIVE EQUIPMENT OR PARTS OR, AT OUR OPTION, TO PAY THE REASONABLE COST OF REPAIR OR REPLACEMENT. YOU AGREE THAT WE SHALL NOT BE LIABLE FOR ANY CONSEQUENTIAL, INCIDENTAL OR SPECIAL DAMAGES FOR INJURY OR FOR COMMERCIAL LOSS, PROPERTY DAMAGE OR OTHERWISE. NOTWITHSTANDING THE ABOVE, OUR MAXIMUM LIABILITY SHALL NOT UNDER ANY CIRCUMSTANCES EXCEED THE CONTRACT PRICE.

AIR MOVEMENT AND CONTROL ASSOCIATION INTERNATIONAL, INC.

Recommended
SAFETY PRACTICES

For Users and Installers of Industrial and Commercial Fans
AMCA Publication 410-96

FOREWORD

i. This publication has been prepared by the Air Movement Division of the Air Movement and Control Association International, Inc. (AMCA). The information contained in this publication has been derived from many sources. The suggestions made necessarily should be general in their meaning and cannot be applied literally to all specific situations or conditions.

ii. ***The safe installation and operation of fans is the responsibility of the system designer, installer, maintainer, and user.*** From the initial system design through the life of the equipment, safety should be a foremost consideration. Some areas which require some special attention include system design, layout and construction, fan performance specifications, foundation and installation details, storage procedures, start-up and commissioning procedures, operation, maintenance, and repair. Specific safety requirements are mandated by federal, state, and local codes. *Recommended Safety Practices for Users and Installers of Industrial and Commercial Fans* is published by AMCA for assistance. System designers, installers, maintainers, and users should consult and properly comply with all applicable codes and guidelines.

iii. The safety recommendations contained herein are intended to assist designers, installers, maintainers, or other users of air moving devices in the safe operation and use of the devices mentioned. These recommendations do not represent the only methods, procedures, or devices appropriate for the situations discussed. Caution should be used at all times when working in or around moving parts.

iv. AMCA disclaims any and all warranties, expressed or implied, regarding the products sold by the manufacturer with which this booklet has been provided. Further, AMCA recommends that competent personnel be consulted in deciding what is the preferred or recommended safety procedure in a particular instance where the guidelines contained in this booklet are unclear or in any way incomplete.

v. AMCA has offered the information within this booklet to assist in the safe operation, maintenance, and use of the products sold by members of AMCA. In so doing, AMCA does not assume any legal duties of the designer or manufacturer to instruct or warn about their product. AMCA expressly disclaims liability for any injury or damage arising out of the operation or use of the product or the guidelines contained herein.

vi. These recommended safety practices were adopted by the AMCA membership on April 28, 1996.

© 1996

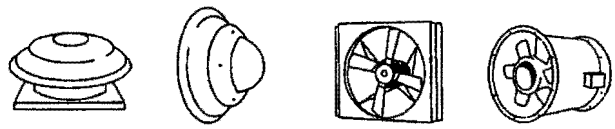

Power Roof Ventilator *Wall Exhauster* *Propeller Fan* *Axial Fan*

1. INTRODUCTION

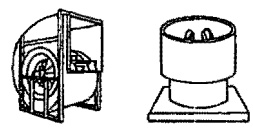

Centrifugal Fan *Uplast Roof Exhauster*

1.1 Fans and other air moving devices are made in a wide variety of types, sizes, and arrangements. This publication addresses the proper use and installation of industrial and commercial fans. It is not intended to address residential and consumer fans.

1.2 Various "size" factors are important when assessing potential for injury; some factors are: diameter of impeller (wheel, rotor, propeller), rotational inertia, voltage, and current.

1.3 This guide is intended to assist in the safe installation of air moving equipment and to warn operating and maintenance personnel of the commonly recognized hazards associated with this equipment.

1.4 ***Handling and installation should always be performed only by experienced and trained personnel who are aware of the hazards associated with rotating equipment. Failure to comply with these practices may result in death or serious bodily injury.*** In addition to following the manufacturer's installation instructions, care should be taken to ensure compliance with specific safety requirements mandated by federal, state, and local codes. Industry safety standards and practices published by AMCA and by other recognized agencies and associations should be consulted and followed where applicable.

2. PERSONNEL SAFETY ACCESSORIES

2.1 GENERAL

2.1.1 Protective devices are incorporated as standard construction on some types of fans but on many fans, these devices are offered as optional accessories. This is done because the need for the devices and the design required will frequently depend upon the type of system, fan location, and operating procedures being employed. Proper protective safety devices; company safety standards; specific safety requirements mandated by federal, state, and local codes; and industry safety standards and practices published by AMCA and by other recognized agencies and associations should be determined by the user, who should specify and obtain the appropriate devices from the fan manufacturer or others, and should not allow operation of the equipment without them. Examples of available devices include the following:

2.2 FAN GUARDS

2.2.1 All fans have moving parts which require guarding in the same way as other moving machinery. Fans located less than seven (7) feet above the floor require special consideration. Specific safety requirements should comply with mandated federal, state, and local codes; and industry safety standards and practices published by AMCA and by other recognized agencies and associations should be followed.

2.2.2 Roof-mounted fans and other fans which are not generally accessible may not require safety guards which might otherwise be appropriate. Where accessibility to these fans is occasional or infrequent, the expense of permanent guarding may be reduced through the use of lockout switches and suitable warnings. In such cases, maintenance personnel should engage the lockout switch before undertaking any maintenance or repairs. As is the case with other machinery involving moving parts, common sense and caution will preserve personal safety.

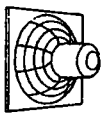

Industrial Type Guard For Propeller Fan

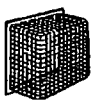

Maximum Safety Guard for Propeller Fan

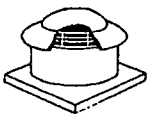

Screen on Roof Ventilator

2.3 INLET AND OUTLET GUARDS

2.3.1 Axial and centrifugal fans are often connected directly to ductwork which will prevent contact with the internal moving parts; when an exposed inlet or outlet represents a hazard, a suitable guard should be installed.

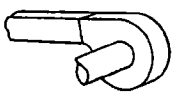

Centrifugal Fan Protected by Ductwork

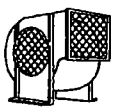

Inlet or Outlet Guard on Centrifugal Fan

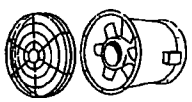

Guard for Axial Fan With Non-Ducted Inlet or Outlet

2.4 DRIVE GUARDS

2.4.1 Fans may be driven directly from the motor shaft or through a belt drive. Where the bearing assembly, rotating shaft, sheaves, or belts are exposed, a suitable guard may need to be provided. Some example guards are shown below.

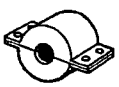

Drive Coupling Guard

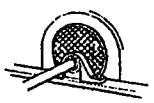

Heat Slinger Guard (Shaft and bearing guard omitted for clarity)

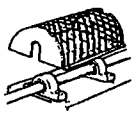

Shaft and Bearing Guard

2.4.2 Drive guards may be required for tubular centrifugal or axial fans to cover the exposed drive sheave and belts outside the fan housing.

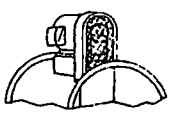

Drive Guard - Axial Fan

2.4.3 A typical centrifugal fan drive guard may vary with the arrangement. Safety guards should be used when drive systems are accessible to personnel. In restricted areas, omission of the back cover may be acceptable.

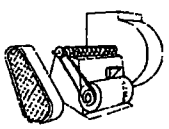

Drive Guard - Centrifugal Fan

2.4.4 Dampers and their linkage may operate suddenly without warning at high speeds. Dampers and their linkage contain pinch points which should be identified and guarded.

3. HIDDEN DANGERS

3.1 GENERAL

3.1.1 In addition to the obvious hazards associated with the moving parts of rotating machinery, fans present additional potential hazards that are not so obvious and should be considered by the system designer and user for safe operation.

3.2 SUCTION AND AIR PRESSURE

3.2.1 Fans operate by creating suction and air pressure which can be hazardous. Solid objects can be drawn into a fan's inlet and then become dangerous projectiles when they are exhausted through the fan's outlet. ***Solid objects can also cause fan failure or impeller failure due to imbalance or damage to the impeller blades.*** Personnel in close proximity to a fan inlet can be overcome by the suction, and drawn into the fan.

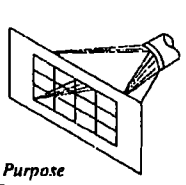

Special Purpose Intake Screen

3.2.2 Whenever there is a possibility that solid objects can be drawn into a remote intake, the intake should be guarded at all times. Before a guard is removed, the fan should be disconnected and the power supply locked out.

3.2.3 Where fans are installed over an occupied area, safety guards should be provided to prevent dropped objects from entering this area during installation and maintenance.

3.2.4 Access doors to a fan or duct system should never be opened while the fan is operating or coasting to a stop. On the downstream (or pressure) side of the system, releasing the door with the system in operation may result in an explosive opening. On the upstream (or suction) side, the inflow may be sufficient to draw in tools, clothing, and other materials. The power supply should always be locked out prior to accessing a fan or ductwork.

3.2.5 Fan design sometimes requires access doors to be supplied with internal components such as a plug to fill a hole in the fan casing. These doors can often be heavy and difficult to handle. Care should be exercised when opening, removing, and installing these components.

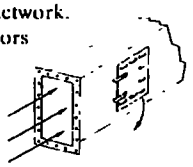

Bolted Access Door in Duct

3.3 WINDMILLING

3.3.1 Even when the power supply is locked out, fans may cause injury or damage if the impeller is subject to "windmilling" which is the turning of the impeller and drive components due to a draft in the system. To guard against this hazard, the impeller should be secured to physically restrict rotational movement.

3.4 TEMPERATURE

3.4.1 Many fans, fan motors, and fan components run at temperatures that could burn someone who comes in contact with the hot areas, including discharged or leaking gases. If this potential hazard is present, steps should be taken so that personnel working near the fan are aware of the danger and can exercise caution.

3.5 FAN NOISE AND ENVIRONMENT

3.5.1 Some fans can generate sound that could be hazardous to exposed personnel. Sound pressure can be measured in the field, but obtaining accurate data is difficult. The environment in which the fan operates can impact the ability to obtain accurate fan sound readings. Consult the manufacturer for fan sound data. It is the responsibility of the system designer, installer, user, and maintainer to comply with specific safety requirements mandated by federal, state, and local codes; and to follow industry safety standards and practices published by AMCA and by other recognized agencies and associations, regarding personnel safety from exposure to fan noise associated with use and exposure to the equipment.

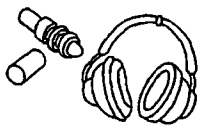

Hearing Protection

3.6 STROBOSCOPIC EFFECT

3.6.1 The stroboscopic effect of certain lights in combination with certain fan speeds may cause a rotating assembly to appear stopped. In these cases, irregular markings can be placed on the moving parts to prevent this type of effect. Personnel should be warned that the fan may be in motion even if it appears not to be.

3.7 SPECIAL PURPOSE FANS AND SYSTEMS

3.7.1 The hidden dangers associated with Special Purpose Fans used in special systems are covered in Section 6.

4. POWER ISOLATION

4.1 Every fan should be installed with a suitable device allowing it to be completely disconnected or isolated from the power supply.

4.2 Many fans are started by remote switches or push-buttons,

by interlocks with other equipment, or by automatic controls. Before performing any maintenance, inspection, or other activity which will require removal of guards, ductwork, access doors, etc., or exposure of moving parts, the fan power supply should be locked out and the fan tagged out of service.

4.3 In some installations other equipment, such as gas burners, may be interlocked with the fan so that disconnecting the fan will automatically shut off the burner or other device. Maintenance on systems of this type should be performed only under the supervision of competent engineering personnel and in accordance with applicable codes and standards.

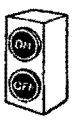

Remote Switch

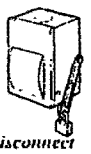
Disconnect Switch

Lock Carried by Maintenance Personnel

4.4 In cases where the fan is power driven by a source other than an electric motor, appropriate provisions should be made for the isolation or disengagement of the power supply.

5. START-UP CHECK LIST

5.1 GENERAL

5.1.1 Before putting any fan into initial operation, the manufacturer's instructions should be followed. Transportation, handling, and installation can cause fasteners to loosen, and cause misalignment of fan components. Carefully follow this check list when commissioning equipment.

5.1.2 Lock out the primary and all secondary power sources.

5.1.3 A complete inspection should be made of all of the ductwork and the interior of the fan. Make certain there is no foreign material which can be drawn into or blown through the fan or ductwork. Appropriate protective measures and safety practices should be observed when entering or working within these areas. These measures might include the use of goggles, respirators, or other personal protective devices.

5.1.4 Make sure the foundation or mounting arrangement and the duct connections are adequately designed and installed per drawings and in accordance with recognized acceptable engineering practices and with the fan manufacturer's recommendations.

5.1.5 Check and tighten all bolts, fasteners, and set screws as necessary.

5.1.6 Check the fan assembly and bearings for proper grounding to prevent static electricity discharge.

5.1.7 Ensure power and drive components such as motor starter, variable frequency drive, or hydraulic power unit are properly sized, matched, and connected to the fan.

5.1.8 Check bearings for recommended lubricant and lubrication amount.

5.1.9 Spin the rotating assembly to determine whether it rotates freely, without hitting anything, and is not grossly out of balance.

5.1.10 Inspect impeller for proper rotation for the fan design.

5.1.11 Check alignment of drives and all other components.

5.1.12 Check the belt drive for proper sheave selection and installation and make sure the sheaves are not reversed (excessive speeds could develop).

5.1.13 Check for recommended belt tension.

5.1.14 Properly secure all safety guards.

5.1.15 Assure that all appropriate warnings have been put in place.

5.1.16 Secure all access doors to the fan and ductwork.

5.1.17 Momentarily energize the fan to check the direction of rotation. Listen as the fan coasts to a stop for any unusual noise, identify the source, and take corrective action as necessary.

5.1.18 Switch on the electrical supply and allow the fan to reach full speed. Check carefully for:

(1) Excessive vibration
(2) Unusual noise
(3) Proper belt alignment
(4) Proper lubrication
(5) Proper amperage, voltage, or power values.
(6) If any problem is indicated, SWITCH OFF IMMEDIATELY.
(7) Lock out the power supply. Secure the fan impeller if there is a potential for windmilling. Check carefully for the cause of the trouble, correct as necessary, and repeat check list procedure.

5.2 Even if the fan appears to be operating satisfactorily, shut down after a brief period, lock out the power supply, and recheck items 5.1.5 through 5.1.17 as the initial start-up may have loosened the bolts, fasteners, and set screws.

5.3 The fan may now be put into operation, but during the first eight hours of running, it should be closely observed and checked for excessive vibration and noise. At this time checks should also be made of motor input current and motor and bearing temperatures to ensure that they do not exceed manufacturer's recommendations.

5.4 After eight hours of operation, the fan should be shut down and the power locked out. Check list items 5.1.5 through 5.1.17 should be inspected and adjusted, if necessary.

5.5 After twenty-four (24) hours of satisfactory operation, the fan should be shut down (locked out) and the drive belt tension should be readjusted to recommended tension.

5.6 After commissioning and start-up, the fan should be operated and maintained in accordance with the manufacturer's and component manufacturer's recommendations. Some basic guidelines for WARNING SIGNS and ROUTINE MAINTENANCE are included in Sections 7 and 8 of this publication. These sections are meant as a supplement to other publications and are not intended to replace the manufacturer's instructions.

6. SPECIAL PURPOSE FANS

6.1 Most fans are designed to handle clean air at standard temperatures between 32°F and 120°F. These fans should not be placed in systems or used for other than their design intended use. *Special Purpose Fans* are designed for use in systems that may include extreme temperatures, explosive, toxic, or special gases, material handling, corrosive environments, or other special hazards which should be carefully considered. Specific safety requirements should comply with mandated federal, state, and local codes; and industry safety standards and practices published by AMCA and by other recognized agencies and associations should be followed.

6.2 Where the system will handle explosive or flammable materials (i.e., dust, fumes, vapors or gases), fans of spark-resistant construction should be used.

6.3 Fans connected by ductwork or other piping may contain gases other than air which are hazardous. In these cases, procedures should be established to prevent exposure of personnel working on or near the fan, and by maintenance personnel who may need to enter the fan. Appropriate personal protective equipment as determined by the material safety data sheet, and system operators should be utilized. Appropriate environmental protective measures should also be taken.

6.4 Fan inlet boxes, housings, ductwork, and other system components which are large enough to permit entry should be considered confined spaces. System areas may also serve as low points where heavy gases, liquids, or other substances may accumulate and present explosive, fire, health, or suffocation hazards. Appropriate protective measures and safety practices should be observed when entering or working within these areas.

6.5 Material-handling fans are specially designed to allow the fan to handle a specific type of material without excessive accumulation of material on the fan impeller. Fans handling corrosive gases or erosive materials should be checked periodically. If loss of material is evident, the fan should be shut down, power supply locked out, and tagged out of service. The manufacturer or other qualified personnel should be consulted to determine if the fan is

within safety limits for operation. To ensure satisfactory operation it is essential to observe the manufacturer's limitations concerning the type of material to be handled by the fan.

6.6 Fan ratings and maximum speed limits are typically based on the use of air at 70°F. At temperatures above the normal range (specified by the manufacturer), a reduction should be made in the maximum speed limit. Information on this reduction and on other precautions to be taken for high temperature applications should be obtained from the fan manufacturer. Personnel working near high temperature fans should be aware that coming in contact with the fan's housing, ductwork, or handled gases could result in serious burns. Where the danger of burns is not apparent, appropriate warnings should be posted. Appropriate protective apparel should be worn whenever working in close contact with heated housings or ductwork.

6.7 Corrosive contaminants can be formed when moisture combines with an active airborne chemical. Fans subjected to corrosive contaminants will corrode; however, suitable protective coatings or material, if used in the fan construction, can delay corrosion. Protected fans should be regularly inspected to ensure that the protection remains effective. Personnel working in environments with airborne chemicals may require personal protective apparel equipment.

6.8 Where liquid can accumulate within the fan, provide for the installation of adequately sized drains.

6.9 In those applications where there is a potential for chemical build-up (such as grease, creosote, etc.), periodic cleaning and proper drainage are necessary to avoid a fire hazard.

7. WARNING SIGNS

7.1 GENERAL

7.1.1 A change in the operating characteristics of a fan may indicate the need for maintenance. Sudden changes may indicate severe problems or dangerous conditions developing. Investigate any changes in the operational characteristics or unusual symptoms of the fan. Refer to AMCA Publication 202, *Troubleshooting*, for a more detailed explanation of investigating procedures. Consult your manufacturer or other qualified consultant with questions concerning changes observed.

7.2 EXCESSIVE VIBRATION

7.2.1 Operational vibration levels are one of the best indicators of the condition of the blower. Careful observation and monitoring of vibration levels can detect a minor problem in the early stages of development when correction is less costly and easier. Recommended maximum vibration levels should be obtained from the equipment manufacturer.

7.2.2 If excessive vibration is observed, stop the fan and lock it out until the cause is corrected. Check for material build-up on the impeller. Generally this will show up as material flaking off the fan impeller and causing an imbalance which may lead to catastrophic failure of the fan or its components. Excessive vibration can also be caused by looseness in the drive train, loose fasteners, misalignment or impeller damage. Contact the fan manufacturer or other qualified consultant to determine the maximum vibration level if it is not included in maintenance instructions.

7.3 NOISE

7.3.1 Changes to the sound level may indicate maintenance is needed. Some unusual noises often heard include: bearing noise indicating the bearings need lubricant or replacement; scraping or ticking noise indicating the rotating parts are hitting the stationary parts; squealing indicating the belt drive needs tensioning; repeated changing pitch of the blower indicating operation of the blower at too low a flow. If any of these noises or any other unusual noises are detected, their cause should be determined and corrective action taken as necessary.

7.4 HIGH MOTOR TEMPERATURES

7.4.1 Check that cooling air to the motor has not been diverted or blocked by dirty guards or similar obstacles. Check the input amperage. An increase in amperage may indicate that some major change has occurred in the system.

7.5 HIGH BEARING TEMPERATURES

7.5.1 This condition is usually caused by improper lubrication; this can be either "over," "under," or "unsuitable" lubrication. In every case, if the cause of the trouble is not easily seen, experienced personnel should examine the equipment before it is put back in operation.

7.6 POOR PERFORMANCE

7.6.1 Too much flow or pressure or too little flow or pressure is often a symptom of a change in the operating system. A fan will typically operate at the same performance in a static system. Some typical causes include: operating of the fan backwards after maintenance procedures; filters dirty or not in place; change or blockage in the ductwork; change in speed of the fan (switching the sheaves); loss or failure of the impeller. All of these causes and many others will affect the flow and pressure produced by the fan.

8. ROUTINE MAINTENANCE

8.1 A preventive maintenance program is an important aspect of an effective safety program. Consult your manufacturer or other qualified consultant with questions concerning changes observed during periodic inspections and routine maintenance.

8.2 The fan manufacturer's operating and maintenance recommendations, as well as the components manufacturer's instructions (such as motor, bearing, drives, etc.) should be strictly followed.

8.3 *Maintenance should always be performed by experienced and trained personnel who are aware of the hazards associated with rotating equipment.* Do not attempt any maintenance on a fan unless the fan power supply has been locked out and tagged out and the impeller has been secured.

8.4 When performing maintenance functions which include disassembly of the fan, careful consideration should be given to the size, weight, center of gravity, and lifting means of the fan components. It should also be noted that the outboard bearing on some fans such as arrangements 1, 8, 9, and 10 is often cap-loaded. Removal of the securing means may result in a sudden change in impeller position.

8.5 Historical data is often the best indicator for determining the operational condition of the fan. Maintenance logs which include relubrication, vibration levels, temperature levels, power requirements, inspections, and other pertinent records should be maintained and consulted as necessary when assessing the condition of the fan.

8.6 Under normal circumstances, handling clean air, the system should require cleaning only once a year. However, the fan and system should be checked at regular intervals to detect any unusual accumulation.

8.7 The fan impeller should be specially checked for build-up of material or dirt which may cause an imbalance with resulting undue wear on bearings and belt drives. A regular maintenance program should be established as needed to prevent material build-up.

8.8 Periodic inspection of the rotating assembly should be made to detect any indication of weakening of the rotor because of corrosion, erosion, or metal fatigue. Where signs of deterioration are found, lock out and tag out the impeller until the unit has been inspected and approved by a qualified consultant.

Section 2 – Transfer Pump

- American Stainless Pump, Air Stripper Discharge Transfer Pump Installation Operation & Maintenance Instructions

AMERICAN STAINLESS PUMPS
Stainless Steel Pumps for the Commercial Marketplace

Installation Operation & Maintenance Instructions

Model SSP & SSPC

Description and Specifications: The Model **SSP** is a close coupled, end suction, single stage, open-impeller, back-pullout centrifugal pump. The model **SSPC** is the enclosed impeller version of the same pump. Connections are NPT threaded. All wetted metal pump parts are 18-8, 304SS, or better. Most parts are formed from stainless steel sheet. O-rings and elastomeric seal parts are Buna (Viton, EPR are optional). Motors are NEMA 56J frame, with a C-Face mounting flange and a threaded shaft. All pumps use a mechanical seal to prevent leakage around the motor shaft.

Operating limits: The models **SSP & SSPC** are designed for 75-PSIG operating pressure at 212 deg. F., with the standard Type-6, carbon vs. ceramic with buna-n elastomers mechanical seal, and a maximum temperature limit of 250 deg. F., with a Type-21 mechanical seal with viton elastomers. The motor is limited to 20 starts per hour, evenly distributed.

Notice: Upon receipt of this equipment, inspect the carton and the equipment for any damages that might have occurred during shipment and notify the carrier immediately. Damage that occurs during shipment is not the responsibility of American Stainless Pumps. Failure to notify the carrier will place responsibility on the purchaser for any repairs or damages occurring during shipment.

Safety Instructions: To avoid serious or fatal injury and/or property damage, read and follow all instructions in this manual. Review all instructions and warnings included in this manual before attempting any work on this pump or pump/motor assembly. Do not remove or alter any decals.

The motor used to drive this pump is an electrical device connected to a potentially lethal voltage power source. Take all precautions required when working with or on the motor and its power source, including but not limited to:

1. Always disconnect and lockout the electrical power source before attempting any connection, maintenance or repairs. Failure to do so can cause electrical shocks, burns and death.
2. Install, ground and wire motors in accordance with all local and national electrical codes.
3. Install an all leg disconnect switch near the motor for quick access.
4. The electrical supply must match the motor nameplate specifications and the motor must be wired per the wiring diagram on the motor to match the selected voltage. **Incorrect wiring can cause fire and motor damage and will void the warranty.**
5. Most single-phase motors and some three phase motors will have automatic thermal protection switches wired in the motor. These switches will open and stop the motor if the motor overheats. As the motor cools, these switches will close and start the motor automatically and unexpectedly.
6. Motors which do not have thermal overloads must have a properly sized contractor or magnetic starters and overload switches (or fuses) in the starter panel. Three phase motors require all leg protection.
7. Use only stranded copper wire to motor and ground. Wire size must limit the maximum voltage drop to 10% of the motor nameplate voltage at the motor terminals.
8. Three phase motors can rotate in either direction. The pump will operate properly only in one direction (clockwise when looking from the motor end, counterclockwise when viewed from the pump end). **Operating the pump in the reverse rotation may damage or destroy the pump and motor and voids the warranty.**

Installation:

Units may be installed horizontally, at an angle or vertically with the motor on top. **Do not mount the motor below the pump as leakage from the pump will damage the motor and can cause a shock, burns or death.**

- ☑ Locate the pump as near to the liquid source as possible. The pump must be primed with little or no air in the case to begin operation. The pump must be located below the liquid level when starting. This pump is not self-priming.
- ☑ Protect the pump and motor from freezing. Although the pump may survive a freeze up, the mechanical seal and O-Rings may not.
- ☑ Allow adequate space around the unit for service and ventilation.
- ☑ Units mounted horizontally should be located on a flat, rigid surface. Unit may be free standing, but some vibrations may occur. If attached to a foundation, tighten hold down bolts before connecting the piping.

Piping:

- ☑ All piping must be independently supported. No piping loads may be carried by the pump.
- ☑ Piping should be the same size or larger than the pump connections.
- ☑ Proper Piping to the suction is critical for proper pump operation. Suction pipe should be short and direct, with a minimum of fittings and turns.
- ☑ Suction pipe must continuously rise to the pump to avoid air pockets. All pipe connections must be airtight.
- ☑ If suction pipe is larger than the pump, an eccentric reducer must be used with the straight side on top to avoid an air pocket.
- ☑ If suction of pump is above the liquid source level, a foot valve or other isolation valve will be needed to prime the pump. A continuous stream of liquid must be made available for the pump suction to hold its prime.
- ☑ Do not use any suction valve for throttling the pump. This will cause loss of prime and damage to the pump that is not covered by warranty.
- ☑ Be sure that the source liquid level is sufficient to prevent vortices from drawing air into the pump.
- ☑ Install a valve on the discharge line for use in regulating the pump flow and for isolating the pump during maintenance and inspection.

Rotation:

The models SSP & SSPC will operate properly only in one direction (clockwise when looking from the motor end, counterclockwise when viewed from the pump end). **Operating the pump in the reverse rotation may cause the impeller to unscrew, breaking the shaft, damaging the pump and/or the motor, and voids the warranty.** Three phase motors can rotate in either direction. Single phase motors normally only rotate in the proper direction.

To check rotation, you must observe the motor shaft from the back of the motor.

1. Remove the end cover from the center of the back of the motor by prying off the cap. You do not need to remove any screws on most motors.
2. Quickly switch on and off the motor and watch the shaft rotation as it slows down. Motor shaft should be turning in the clockwise direction when viewed from the back of the motor.
3. If your three-phase motor is turning in the wrong direction, **have a qualified electrician interchange two of the three motor power wires.** This should reverse the rotation. If a single-phase motor is turning in the wrong direction, it has been wired wrong internally. Consult the motor manufacturer or American Stainless Pumps for instructions.
4. Check the rotation again, if it is correct, replace the end cover cap.

Operation:

- ☑ Pump must be completely primed before starting. Air in the suction lines or case must be vented.
- ☑ **Model SSPC Only:** If the pump case is rotated so that the discharge nozzle is not vertical, an air pocket may form in the case that will prevent the pump from operating properly. Loosen the case bolts until this air is removed for proper operation. Be sure to retighten the bolts before operating the pump.
- ☑ **Do not operate the pump at or near zero flow.** At zero flow, heat will build up in the pump and can cause extreme damage to the pump, property damage and/or possible injury to operating personal. Minimum flows of 10% of the pumps best efficiency point are recommended unless otherwise authorized by ASP.
- ☑ Do not operate the pump beyond the flow rates shown on published curves. Noisy pumps or the sounds of "pumping rocks" may be signs of cavitation or operation beyond the pumps capacity.

Operation Continued:

- ☑ Check pump and motor for vibration. Vibration may be a sign of pipe strain, insufficient mounting or operation beyond the pumps capacity.
- ☑ The pump models SSP & SSPC are not designed for handling large amounts of solids. For the model SSP, Spherical solids size should not exceed the vane height of the impeller, less 0.060". For the model SSPC, solid sizes must be smaller than the impeller vane family expressed in thousandths of an inch, less 0.140".

Maintenance:

There is no scheduled maintenance required. Close-coupled pumps have no bearings. Bearings in the motors are permanently grease lubricated and cannot be re-greased. Mechanical seals will need to be replaced when leaking. O-Rings may harden with age and may need to be replaced when they leak.

Motor Bearings and Pump Thrust: Model SSP Only

Open impellers generate significantly more thrust than do enclosed impellers. The Model SSP with a 4.38" diameter impeller operating at 20 psig generates about 150 pounds of thrust. This thrust load is carried by the motor bearing. The standard jet pump motor and the standard SSP motor uses as a front and rear bearing a size 203 grease lubricated bearing. This bearing has a B10 rated life of approximately 6,000 hours when operated with a thrust load of 150 pounds at 3500 RPM. This rating means that 10% of all bearings operated in this condition will fail within 6,000 hours of operation. The average bearing life will be 3 to 4 times this 6,000 hours.

Pumps and motors which operate intermittently, or only operate 40 hours per week, will usually have acceptable bearing lives with the standard jet pump motor bearing. Pumps that operate continuously, 24 hours per day, will have about 10% of their thrust bearings fail in the first year of operation.

For service applications that are critical, for installations that are difficult to access, or for pumps operating at differential pressures above 25 psig, American Stainless Pumps recommends that motors with a larger thrust bearings and higher load ratings be used. Consult factory for pricing and details.

Disassembly:

Disconnect and lockout the electrical power before attempting any disassembly. Casing may contain hazardous fluids. Drain and flush and take necessary precautions.

It is not necessary to remove piping from the case to disassemble. Pump is a back pullout design and unless casing needs to be repaired or replaced, it can stay in place during servicing.

- ☑ See page 7 for model SSP, and page 8 for model SSPC cross sectional drawings.

1. Close all valves and drain pump and pipes and flush if necessary.
2. Remove any motor hold down bolts.
3. Remove the eight (8) case bolts (Item 7CS) with a 3/16" allen wrench.
4. Pull the motor and pump internals back out of the case. The baseplate (Item 800) will slip off when the bottom two case bolts are removed and can be left with the pump case. Remove the case o-ring (item 500) and inspect for damage or hardness.
5. If the motor is a three phase motor, a locking mechanism (item 7SC) is used to prevent the impeller (item 200) from unthreading if started in the wrong direction. If motor horsepower is less than 1 HP, the starting torque is relatively weak. ASP uses a locking compound to prevent the impeller from unthreading at start-up. If the motor horsepower is equal to or greater than 1.0 HP, ASP will provide a left hand threaded, button head locking screw with an impeller washer to prevent unthreading. The locking screw (item 7SC) is installed with removable Loctite to prevent it from coming out when operating in the correct rotation. Remove this locking screw by turning it **clockwise** while holding the impeller against rotation.
6. Remove the impeller (item 200) by turning the impeller counterclockwise (when looking at the impeller from the pump end) while holding the motor shaft. It will be necessary to remove the motor shaft cover plate in the center of the rear of the motor to get access to the shaft. Using a screwdriver, wrench or vise grips as needed, hold the shaft tightly against rotation while turning the impeller. **Do apply any heat to the components.** If you are unable to hold the shaft in this manner, remove the rear motor housing and grip the motor shaft with vise grips or other similar device (do not hold shaft where bearings will mount).
7. **Model SSP Only:** There should be several spacing washers behind the impeller. These spacers locate the open impeller vanes close to the case for efficient operation. Measure the thickness of this stack of spacers for future reference. Remove them from the shaft but do not lose these washers. You will need them for reassembly.

Disassembly continued...

8. Remove the rotating element of the mechanical shaft seal (item 300). This element is held in place by the impeller only. If the rotating element does not come off easily, it is stuck to the shaft. Pry up the seal plate (Item 400) with screwdrivers or pry bars. The seal plate should compress the seal spring and force the seal off the shaft. If seal is stuck, and you must pry with force, do not pry towards your face or body. The seal and seal plate can come free unexpectedly and injure you.
9. If the seal plate (item 400) did not come off with the seal, remove it now. If you plan to replace the stationary seat, you will need to press it out from the back. Do not push with your finger, as you will probably cut it on the edges of the seal plate when the seal pushes out.
10. If you plan to replace the motor, remove the four motor adapter bolts (Item 7MB) with a 7/32" allen wrench and remove the motor adapter plate (Item 600). If you are not replacing the motor, leave the adapter plate in place.
11. If the motor comes with a deflector, the deflector should go outside of the motor adapter plate and must be removed if the adapter plate is to be removed.
12. Check the suction o-ring (item 510) in the case suction nozzle. It may be difficult to remove. Use a sharp pointed awl or similar device to pry the o-ring from the groove. Replace if damaged, swollen, fretted, or just worn out.

Assembly or Reassembly: SSP & SSPC

- ☑ See page xxx for model SSP, and page xxx for model SSPC cross sectional drawings.
- ☑ Assembly of the pump and motor is easier when the motor is standing face up so that parts do not fall off, although access to the motor shaft at the rear of the motor will require a horizontal position.
- ☑ It is considered good practice to replace the mechanical seal whenever you have to disassemble the pump.

1. If replacing the motor, remove the deflector from the motor shaft. There may not be enough room behind the motor adapter plate for the deflector to spin freely.
2. Install the motor adapter plate (Item 600) with the four motor bolts (Item 7MB) using a 7/32" allen wrench. You must use the low profile button head socket screws that came with the pump or other low profile head bolts. There is not enough room for a standard cap head screw/bolt. Tighten the bolts. Install the deflector now.
3. Install the mechanical seal stationary seat into the Seal Plate (Item 400) by putting a suitable lubricant on the cup seat and gently pressing into the seal plate bore. **Do not get any lubricant on the seal faces**. Use the foam sheet from the seal box to protect the seal face from dirt and scratches while pressing into the seal plate. Place the seal plate onto the motor adapter plate.
4. Lubricate the sealing elastomers on the rotating assembly of the mechanical seal and press gently onto the shaft. You may have to hold the seal in place until the impeller is installed.
5. **Model SSP Only:** Place the necessary number and thickness of impeller spacer/washers onto the threaded portion of the shaft. If you are not changing the impeller or the motor, use the same batch of spacer/ washers you removed. See the section on ***Setting Impeller Clearance*** for procedures if you have changed the impeller to case setting.
6. (If motor is three-phase, read section 7 below for Loctite instructions, then continue reading here) Thread the impeller onto the pump shaft. Be sure the impeller hub is tight against the spacer/washers that are tight against the shoulder of the motor shaft. If you leave the impeller loose, when the motor starts up, the impeller will tighten up on the shaft so tightly that you may not be able to remove it later. You will need to hold the motor shaft from the rear of the motor with a large screwdriver, wrench or vise grips while tightening the impeller.
7. If motor is three-phase, and wiring has been reconnected, rotation may have changed. To protect against rotation in the wrong direction at start up, reinstall the left hand threaded Impeller locking screw and washer (Item 7SC), or for motor horsepowers less than 1 HP, install the impeller with a locking compound such as Loctite.
8. Install the case o-ring (item 500). Replace if brittle, damaged or misshapen.
9. **Model SSPC Only:** Install the suction o-ring (item 510). Replace if brittle, damaged or misshapen.
10. **Model SSPC Only:** Join up the back pull out assembly with the case. Do not force the pump into the case. The suction O-ring (item 510) can be pinched when installing. You may have to back out the pump from the case, center up the O-ring with your finger and slip in the pump assembly again. Before installing the case bolts, check to be sure the impeller is spinning freely.
11. **Model SSP Only:** Join up the back pull out assembly with the case. Install the (8) case bolts (Item 7CS), leaving the bottom two bolts loose for attaching the base (not necessary with footed motors). Slip the baseplate under the bottom two bolts. Tighten the case bolts while holding the baseplate in place.
12. **Model SSP Only:** Check the impeller to case clearance per the following instructions and adjust as needed.
13. Install and tighten the motor base hold down bolts.

Setting Impeller Clearance: Model SSP Only

- ☑ **See *SSP Performance Notes* for impeller shimming discussion.**
- ☑ **Properly setting the impeller to case clearance is the most critical factor in determining the SSP's performance.** You will get maximum performance and efficiency (and maximum amp draw) with near to zero clearance. Factory standard clearance is 8 to 12 mil. Spacer/Washers to adjust clearances are available in 10 mil and 15-mil thickness.
- ☑ You can have more or less than normal flow and head by changing the clearance. To increase clearance, remove impeller spacer/washers. To decrease clearance, add impeller spacer/washers. **Be aware that if you set the impeller at near to zero clearance, and operate near maximum flow rates, you may overload the standard motor. Also be aware that impeller clearances near zero greatly increase the risk of the impeller grinding against the casing.**
- ☑ Standard factory settings for spacers are 30 to 90 mils of spacer/washers to obtain 10-mil clearance. Since the tolerances of the motor shaft and pump parts can stack up, some pumps may need more or less than this standard. Some special OEM assemblies will not have any spacers when the customer elects to accept reduced performance in return for ease of assembly.
- ☑ American Stainless Pumps provides special feeler gauges for impeller shimming. Call and order our feeler gauge set, part number K200. Our standard shim pack set is also available. It contains ten each of the 0.010" and 0.015" shims.

Use the following impeller shimming method when building a new pump:

- ☑ American Stainless Pumps provides special feeler gauges for impeller shimming. Call and order our feeler gauge set, part number K200. Our standard shim pack set is also available. It contains ten each of the 0.010" and 0.015" shims. Use part number 200115.

1. Place the pump (as assembled through step 4 on page 47) on the workbench, positioned vertically.
2. Place 0.050" shims onto the motor shaft (two 0.015" shims and two 0.010" shims).
3. Thread the impeller onto the shaft, compressing the seal and shims. You will need to hold the motor shaft from the rear of the motor with a large screwdriver, wrench or vise grips while tightening the impeller.
4. Place case o-ring (item 500) onto seal plate. Make sure o-ring is laying flat against the seal plate flange.
5. Place case onto pump assembly, and install case screws (item 7CS). Tighten case screws in a cross-bolting fashion.
6. Rotate the impeller from the back of the motor, or with your finger through the suction or discharge nozzles. Listen and feel for any scraping noises from the impeller hitting the casing. If a scraping noise is heard, remove the case and impeller, and then remove either one 10 or one 15 mil shim. Repeat step 5 & 6. If no noise is heard, proceed to step 7.
7. Use the pink feeler gauge (0.015"), and slide it in between the impeller and the casing through the discharge nozzle. If the pink feeler gauge does not fit, go back to step 6 and remove shims as necessary to make pink gauge slide in between impeller and casing. When done correctly, the feeler gauge will become visible through the suction nozzle. Continue pushing the feeler gauge into the casing until it is all the way in, and centered across the face of the impeller. Rotate the feeler gauge using a pair of needle nose pliers, and feel for tight spots. If gauge encounters only a slight pinching resistance, you probably have a good impeller clearance. Remove the pink feeler gauge, and check to see that the brown feeler gauge (0.010") does not bind when used in the same way. If it does not, go to step 9. If it does, remove 0.010 mils of shims from behind impeller and repeat step 7. If the pink feeler gauge is free to rotate 360 degrees across the face of the impeller without binding or resistance, go to step 8.
8. If the pink gauge is capable of rotating 360 degrees without binding, then there is a greater impeller/casing clearance than 0.015". Determine this clearance by repeating step 7 with the thicker gauges. Yellow=0.020", White=0.025", Orange=0.030". If clearance is larger than 0.030", stack the various gauge thickness and repeat procedure until clearance is known. When clearance is determined, add shims behind the impeller to close clearance as desired. Repeat step 7.
9. Proper clearance has been established. Return to step 5 on the previous page.

Model SSP Impeller Shimming Method for Replacement Impellers

When replacing impellers in a model SSP open impeller pump, the following worksheet will provide a relatively quick method for maintaining the proper impeller/casing clearance. You may also want to read the previous page for an overview of the impeller shimming procedure.

REPLACEMENT IMPELLER SHIMMING PROCEDURE

Old Impeller

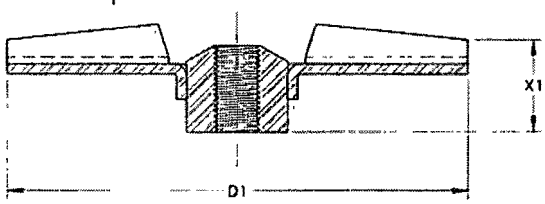

New Impeller

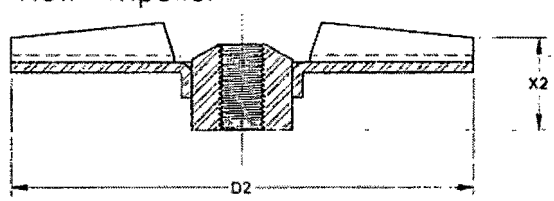

1. Measure D1, X1, D2, & X2. (Measure X1 & X2 as accurately as possible)

   D1=_____ X1=_____ D2=_____ X2=_____

2. Determin K1 & K2.

Impeller Diamerer D	K
3-3/4	-0.033
4-3/8	0.0
5-1/4	0.046

   K1=_____ K2=_____

3. Calculate H1 & H2
   H1=X1+(K1) H2=X2+(K2)

   H1=_____ H2=_____

4. Calculate S.
   S=H1-H2

   Round S to the nearest 0.005 increment.

   If S>0, then add shims equal to S.
   If S<0, subtract shims equal to S.

NOTES: & WHEN NOT NOTED OTHERWISE
NO SHARP EDGES
FILLET ALL CORNERS TO 0.01
RADIAL & DIAMETRICAL DIMENSIONS ARE TO BE HELD TO A ±0.002 SYMMETRICAL TOLERANCE, AND ARE CONCENTRIC WITH PART CENTERLINES.
ALL DIMENSIONS ARE IN INCHES
PLEASE CALL (310) 630-8089 IF THERE ARE ANY QUESTIONS OR COMMENTS RELATED TO THIS DRAWING

STANDARD TOLERANCES	
0.X	±0.01
0.XX	±0.005
0.XXX	±0.002
0.XXXX	±0.0005

NO.	REVISION DESCRIPTION	DATE
0	ORIGINAL DRAWING	XX/XX/XX

AMERICAN STAINLESS PUMPS
SSP IMPELLER SHIM GUIDE 12/13/00
MWC
..\ASP\SSP\XXXXXXXX.DWG 0

SSP (Open Impeller) Cross Sectional Drawing

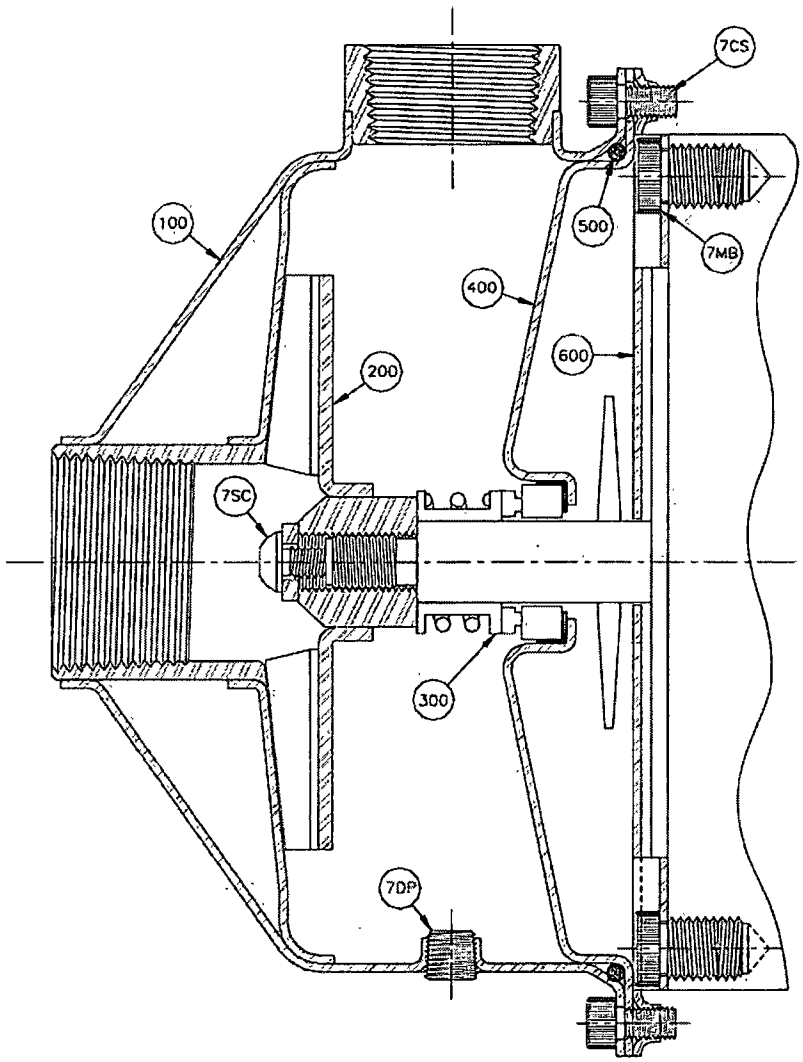

Item No.	Part Description	Standard Materials
100	Casing	304 SS
200	Impeller (Open)	304 SS
300	Mechanical Seal - Type 6 (std.) (Other seal types available)	Car/Cer/Buna N/316 SS (Other materials available)
400	Seal Plate	304 SS
500	Casing O-Ring	Buna N (Other materials available)
600	Motor Adapter Plate	304 SS
7CS	Casing Screw - 1/4-20 (3/16 Allen)	Nickle Plated Steel
7DP	Drain Plug - 1/8" NPT	304 SS
7MB	Motor Bolt - 3/8-16 (7/32 Allen)	304 SS
7SC	Impeller Screw - 10-32LH (1/8 Allen) (Standard on 3-Ph motors 1-hp or larger)	304 SS
800 (not shown)	Pump Base (not supplied with footed motors)	304 SS

14032 S. Avalon Blvd. Los Angeles, CA 90061
Phone: (310) 630-8089 Fax: (310) 630-8095

SSPC (Enclosed Impeller) Cross Sectional Drawing

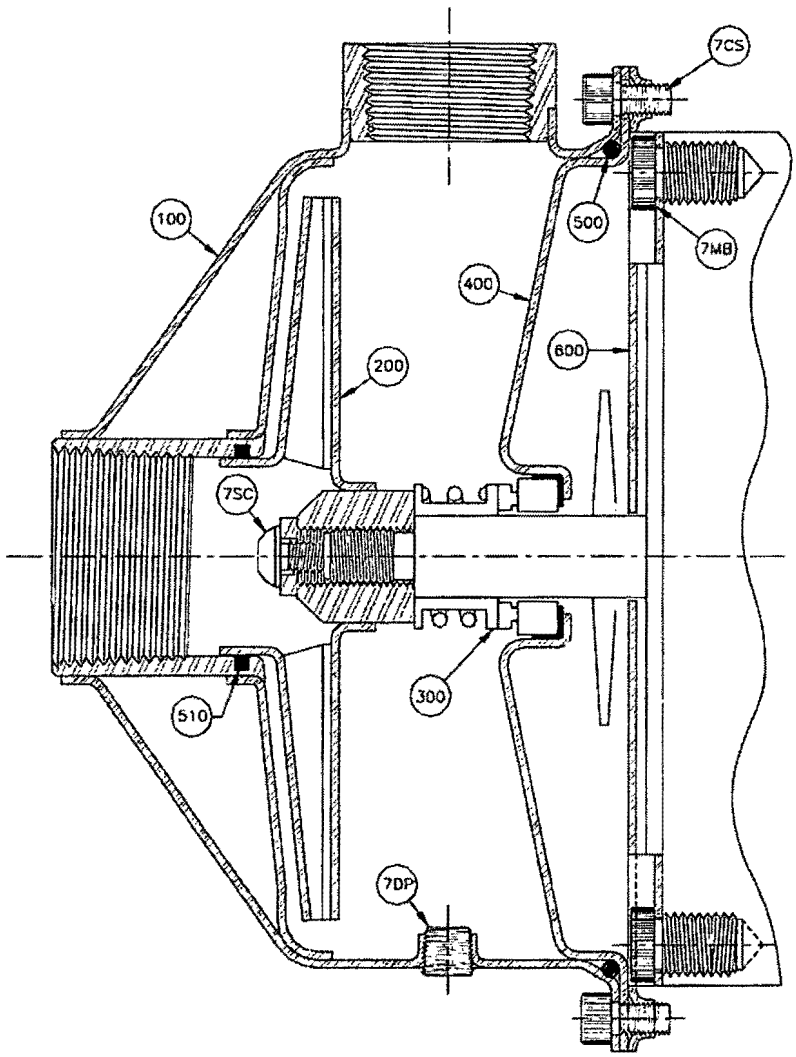

Item No.	Part Description	Standard Materials
100	Casing	304 SS
200	Impeller (Enclosed)	304 SS
300	Mechanical Seal - Type 6 (std.) (Other seal types available)	Car/Cer/Buna N/316 SS (Other materials available)
400	Seal Plate	304 SS
500	Casing O-Ring	Buna N (Other materials available)
510	Impeller O-Ring	Buna N (Other materials available)
600	Motor Adapter Plate	304 SS
7CS	Casing Screw - 1/4-20 (3/16 Allen)	Nickle Plated Steel
7DP	Drain Plug - 1/8" NPT	304 SS
7MB	Motor Bolt - 3/8-16 (7/32 Allen)	304 SS
7SC	Impeller Screw - 10-32LH (1/8 Allen) (Standard on 3-Ph motors 1-hp or larger)	304 SS
800 (not shown)	Pump Base (not supplied with footed motors)	304 SS

14032 S. Avalon Blvd. Los Angeles, CA 90061
Phone: (310) 630-8089 Fax: (310) 630-8095

Section 3 – Instrumentation

- Dwyer Series 2000 Differential Pressure Gauge Specifications - Installation & Operating Instructions
- Dwyer Series 605 Magnehelic Differential Pressure Indicating Transmitter Specifications - Installation & Operating Instructions
- Dwyer Series 1950 Differential Pressure Switch Specifications - Installation & Operating Instructions
- Air Stripper Sump Float Level Switch Specifications

Series 2000 Magnehelic® Differential Pressure Gages

Indicate positive, negative or differential. Accurate within 2%.

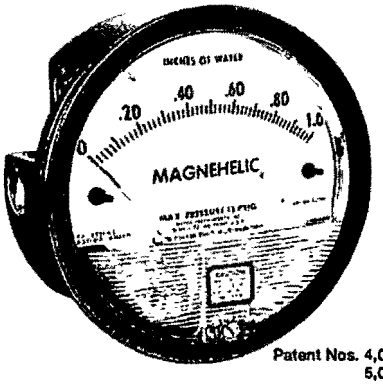

Patent Nos. 4,030,365
5,012,678

Standard Magnehelic® Pressure Gage has a large, easy-to-read 4" dial.

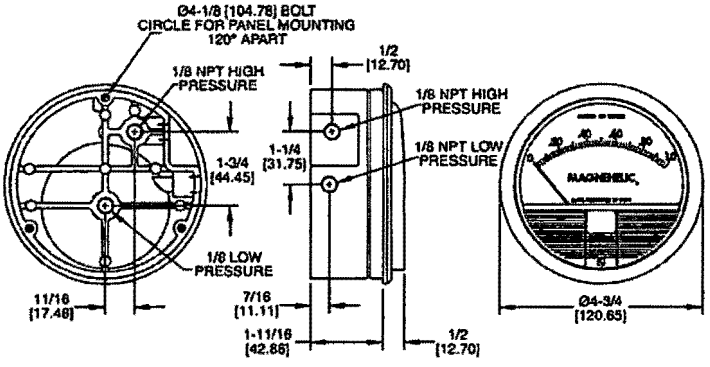

Dimensions, Standard Series 2000 Magnehelic® Pressure Gages. (Slightly different on medium and high pressure models)

Select the Dwyer Magnehelic® gage for high accuracy – guaranteed within 2% of full scale – and for the wide choice of 81 models available to suit your needs precisely. Using Dwyer's simple, frictionless Magnehelic® movement, it quickly indicates low air or non-corrosive gas pressures – either positive, negative (vacuum) or differential. The design resists shock, vibration and over-pressures. No manometer fluid to evaporate, freeze or cause toxic or leveling problems. It's inexpensive, too.

The Magnehelic® is the industry standard to measure fan and blower pressures, filter resistance, air velocity, furnace draft, pressure drop across orifice plates, liquid levels with bubbler systems and pressures in fluid amplifier or fluidic systems. It also checks gas-air ratio controls and automatic valves, and monitors blood and respiratory pressures in medical care equipment.

NOTE: Do Not use with Hydrogen gas. Dangerous reactions will occur.

Flush ...Surface...or Pipe Mounted

MOUNTING. A single case size is used for most models of Magnehelic® gages. They can be flush or surface mounted with standard hardware supplied. With the optional A-610 Pipe Mounting Kit they may be conveniently installed on horizontal or vertical 1¼" - 2" pipe. Although calibrated for vertical position, many ranges above 1" may be used at any angle by simply re-zeroing. However, for maximum accuracy, they must be calibrated in the same position in which they are used. These characteristics make Magnehelic® gages ideal for both stationary and portable applications. A 4⅝" hole is required for flush panel mounting. Complete mounting and connection fittings plus instructions are furnished with each instrument.

VENT VALVES

In applications where pressure is continuous and the Magnehelic® gage is connected by metal or plastic tubing which cannot be easily removed, we suggest using Dwyer A-310A vent valves to connect gage. Pressure can then be removed to check or re-zero the gage.

HIGH AND MEDIUM PRESSURE MODELS

Installation is similar to standard gages except that a 4⅝" hole is needed for flush mounting. The medium pressure construction is rated for internal pressures up to 35 psig and the high pressure up to 80 psig. Available for all models. Because of larger case, the medium pressure and high pressure models will not fit in a portable case size. Weight 1 lb., 10 oz. Installation of the A-321 safety relief valve on standard Magnehelic® gages often provides adequate protection against infrequent overpressure.

SPECIFICATIONS

Service: Air and non-combustible, compatible gases. (Natural Gas option available.)
Wetted Materials: Consult Factory.
Housing: Die cast aluminum case and bezel, with acrylic cover. Exterior finish is coated gray to withstand 168 hour salt spray corrosion test.
Accuracy: +/- 2% of full scale (±3% on - 0 and ±4% on - 00 ranges), throughout range at 70°F. (21.1°C)
Pressure Limits: -20" Hg. to 15 psig.† (-0.677 bar to 1.034 bar); MP option; 35 psig (2.41 bar), HP option; 80 psig (5.52 bar).
Overpressure: Relief plug opens at approximately 25 psig (1.72 kPa), standard gages only.
Temperature Limits: 20 to 140°F.* (-6.67 to 60°C).
Size: 4" (101.6 mm) Diameter dial face.
Mounting Orientation: Diaphragm in vertical position. Consult factory for other position orientations.
Process Connections: 1/8" female NPT duplicate high and low pressure taps - one pair side and one pair back.
Weight: 1 lb. 2 oz. (510g), MP & HP 2 Lb. 2 oz. (963g).
Standard Accessories: Two 1/8" NPT plugs for duplicate pressure taps, two 1/8" pipe thread to rubber tubing adapter and three flush mounting adapters with screws. (Mounting and snap ring retainer substituted for 3 adapters in MP & HP gage accessories.)
*Low temperature models available as special option.
†For applications with high cycle rate within gage total pressure rating, next higher rating is recommended. See Medium and High pressure options at lower left.

OPTIONS AND ACCESSORIES

Transparent overlays
Furnished in red and green to highlight and emphasize critical pressures.

Adjustable signal flag
Integral with plastic gage cover. Available for most models except those with medium or high pressure construction. Can be ordered with gage or separate.

LED Setpoint Indicator
Bright red LED on right of scale shows when setpoint is reached. Field adjustable from gage face, unit operates on 12-24 VDC. Requires MP or HP style cover and bezel.

Portable units
Combine carrying case with any Magnehelic® gage of standard range,except high pressure connection. Includes 9 ft. (2.7 m) of ¾" I.D. rubber tubing, standhang bracket and terminal tube with holder.

Air filter gage accessory package
Adapts any standard Magnehelic® for use as an air filter gage. Includes aluminum surface mounting bracket with screws, two 5 ft. (1.5 m) lengths of ¼" aluminum tubing two static pressure tips and two molded plastic vent valves, integral compression fittings on both tips and valves.

Quality design and construction features

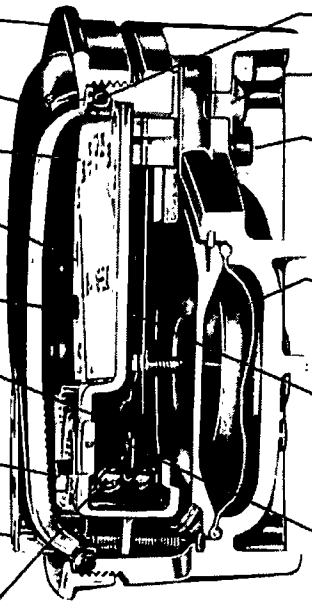

Bezel provides flange for flush mounting in panel.

Clear plastic face is highly resistant to breakage. Provides undistorted viewing of pointer and scale.

Precision litho-printed scale is accurate and easy to read.

Red tipped pointer of heat treated aluminum tubing is easy to see. It is rigidly mounted on the helix shaft.

Pointer stops of molded rubber prevent pointer over-travel without damage.

"Wishbone" assembly provides mounting for helix, helix bearings and pointer shaft.

Jeweled bearings are shock-resistant mounted; provide virtually friction-free motion for helix. Motion damped with high viscosity silicone fluid.

Zero adjustment screw is conveniently located in the plastic cover, and is accessible without removing cover. O-ring seal provides pressure tightness.

O-ring seal for cover assures pressure integrity of case.

Blowout plug of silicone rubber protects against overpressure on 15 PSIG rated models. Opens at approximately 25 PSIG.

Die cast aluminum case is precision made and iridite-dipped to withstand 168 hour salt spray corrosion test. Exterior finished in baked dark gray hammerfold. One case size is used for all standard pressure options, and for both surface and flush mounting.

Silicone rubber diaphragm with integrally molded O-ring is supported by front and rear plates. It is locked and sealed in position with a sealing plate and retaining ring. Diaphragm motion is restricted to prevent damage due to overpressures.

Calibrated range spring is flat spring steel. Small amplitude of motion assures consistency and long life. It reacts to pressure on diaphragm. Live length adjustable for calibration.

Samarium Cobalt magnet mounted at one end of range spring rotates helix without mechanical linkages.

Helix is precision made from an alloy of high magnetic permeability. Mounted in jeweled bearings, it turns freely, following the magnetic field to move the pointer across the scale.

Dual Scale English/Metric Models		
Model Number	Range, In. W.C.	Range, Pa or kPa
2000-0D	0-0.5	0-125 Pa
2001D	0-1.0	0-250 Pa
2002D	0-2.0	0-500 Pa
2003D	0-3.0	0-700 Pa
2004D	0-4.0	0-1.0 kPa
2006D	0-6.0	0-1.5 kPa
2008D	0-8.0	0-2.0 kPa
2010D	0-10	0-2.5 kPa

SERIES 2000 MAGNEHELIC® — MODELS AND RANGES
STOCKED MODELS in bold

The models below will fulfill most requirements. Page 5 also shows examples of special models built for OEM customers. For special scales furnished in ounces per square inch, inches of mercury, metric units, etc., contact the factory.

Model Number	Range Inches of Water
2000-00†	0-.25
2000-0†	0-.50
2001	0-1.0
2002	0-2.0
2003	0-3.0
2004	0-4.0
2005	0-5.0
2006	0-6.0
2008	0-8.0
2010	0-10
2015	0-15
2020	0-20
2025	0-25
2030	0-30
2040	0-40
[illegible]	[illegible]
2050	0-60
[illegible]	[illegible]
2100	0-100
2150	0-150

Model Number	Range Zero Center Inches of Water
2300-0†	.25-0-.25
2301	.5-0-.5
2302	1-0-1
2304	2-0-2
2310	5-0-5
2320	10-0-10
2330	15-0-15

Model Number	Range PSI
2201	0-1
2202	0-2
2203	0-3
2204	0-4
2205	0-5
2210*	0-10
2215*	0-15
2220*	0-20
2230**	0-30

*MP option standard
**HP option standard

Dual Scale Air Velocity Units

Model Number	Range In W.C.I Velocity, F.P.M.
2000-00AV	0-.25/300-2000
2000-0AV	0-.50/500-2800
2001AV	0-1.0/500-4000
2002AV	0-2.0/1000-5600
2010AV	0-10/2000-12500

For use with pitot tube.

Model Number	Range MM of Water
2000-6MM†	0-6
2000-10MM	0-10
2000-25MM	0-25
2000-50MM	0-50
2000-80MM	0-80
2000-100MM	0-100
Zero Center Ranges	
2300-20MM†	10-0-10

Model Number	Range, CM of Water
2000-15CM	0-15
2000-20CM	0-20
2000-25CM	0-25
2000-50CM	0-50
2000-80CM	0-80
2000-100CM	0-100
2000-150CM	0-150
2000-200CM	0-200
2000-250CM	0-250
2000-300CM	0-300
Zero Center Ranges	
2300-4CM	2-0-2
2300-10CM	5-0-5
2300-30CM	15-0-15

†These ranges calibrated for vertical scale position.

Model Number	Range, Pascals
2000-60 Pa†	0-60
2000-125 Pa†	0-125
2000-250 Pa	0-250
2000-500 Pa	0-500
2000-750 Pa	0-750
Zero Center Ranges	
2300-250 Pa	125-0-125
2300-500 Pa	250-0-250

Model Number	Range, Kilopascals
2000-1 kPa	0-1
2000-1.5 kPa	0-1.5
2000-2 kPa	0-2
2000-3 kPa	0-3
2000-4 kPa	0-4
2000-5 kPa	0-5
2000-8 kPa	0-8
2000-10 kPa	0-10
2000-15 kPa	0-15
2000-20 kPa	0-20
2000-25 kPa	0-25
2000-30 kPa	0-30
Zero Center Ranges	
2300-1 kPa	.5-0-.5
2300-3 kPa	1.5-0-1.5

Accessories
A-310A, 3-Way Vent Valve
A-321, Safety Relief Valve
A-432, Portable Kit
A-605, Air Filter Kit
A-610, Pipe Mount Kit

Options — To order, add suffix: I.E. 2001-ASF
ASF (Adjustable Signal Flag)
HP (High Pressure Option)
LT (Low Temperatures to -20°F)
MP (Med. Pressure Option)
SP (Setpoint Indicator

Scale Overlays — Red, Green, Mirrored or Combination, Specify Locations

Special Purpose Ranges
Scale No. 2401 Square Root Specify Range
Scale No. 2402 Blank Scale Specify Range

Model 2000-00N, range -.05 to +.20" W.C. For room pressure monitoring

101SR01-0296P

BULLETIN NO. **A-27**

Magnehelic® Differential Pressure Gage

OPERATING INSTRUCTIONS

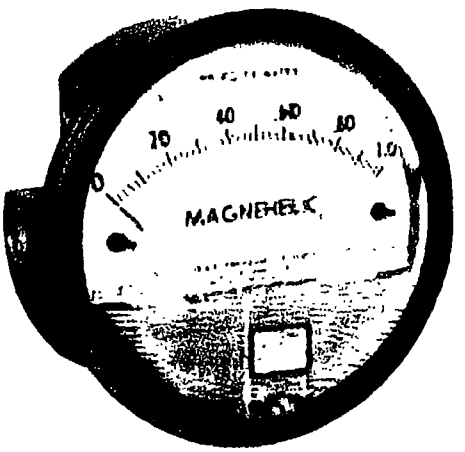

SPECIFICATIONS

Dimensions: 4-3/4" dia. x 2-3/16" deep.
Weight: 1 lb. 2 oz.
Finished: Baked dark gray enamel.
Connections: 1/8" NPT high and low pressure taps, duplicated, one pair side and one pair back.
Accuracy: Plus or minus 2% of full scale, at 70°F. (Model 2000-0, 3%; 2000-00, 4%).
Pressure Rating: 15 PSI (0,35 bar)
Ambient Temperature Range: 20° to 140°F (-7 to 60°C).
Standard gage accessories include two 1/8" NPT plugs for duplicate pressure taps, two 1/8" NPT pipe thread to rubber tubing adapters, and three flush mounting adapters with screws.

Caution: For use with air or compatible gases only.

For repeated over-ranging or high cycle rates, contact factory.

Not for use with Hydrogen gas. Dangerous reactions will occur.

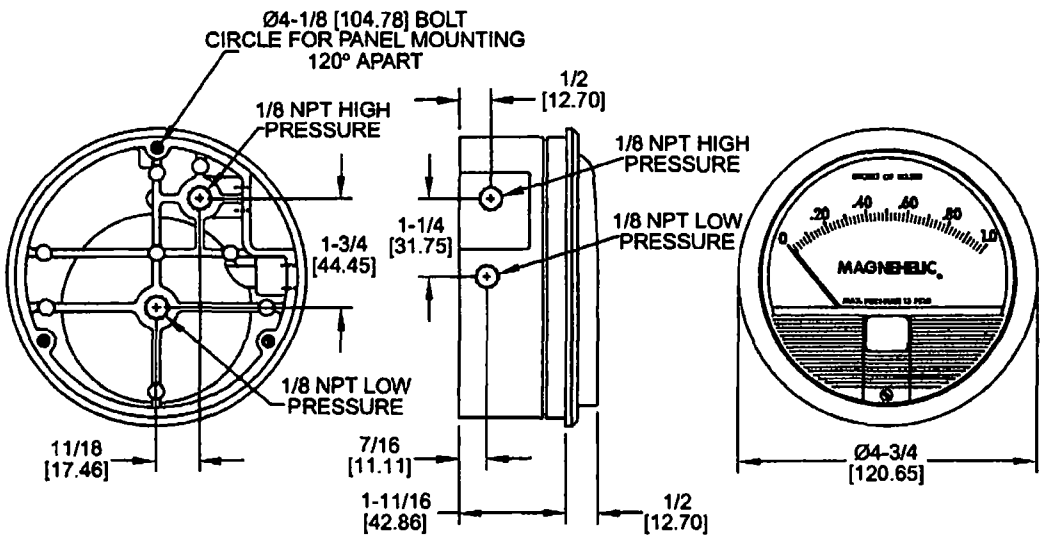

DWYER INSTRUMENTS, INC.
P.O. BOX 373 • MICHIGAN CITY, INDIANA 46361 U.S.A.

Phone: 219/879-8000 www.dwyer-inst.com
Fax: 219/872-9057 e-mail: info@dwyer-inst.com
Lit-by-Fax: 888/891-4963

MAGNEHELIC® INSTALLATION

1. Select a location free from excessive vibration and where the ambient temperature will not exceed 140°F. Also, avoid direct sunlight which accelerates discoloration of the clear plastic cover. Sensing lines my be run any necessary distance. Long tubing lengths will not affect accuracy but will increase response time slightly. Do not restrict lines. If pulsating pressures or vibration cause excessive pointer oscillation, consult the factory for ways to provide additional damping.

2. All standard Magnehelic gages are calibrated with the diaphragm vertical and should be used in that position for maximum accuracy. If gages are to be used in other than vertical position, this should be specified on the order. Many higher range gages will perform within tolerance in other positions with only rezeroing. Low range Model 2000-00 and metric equivalents must be used in the vertical position only.

3. Surface Mounting

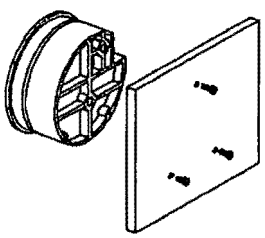

Locate mounting holes, 120° apart on a 4-1/8" dia. circle. Use No. 6-32 machine screws of appropriate length.

4. Flush Mounting

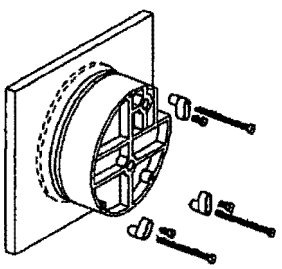

Provide a 4-9/16" dia. opening in panel. Insert gage and secure in place with No. 6-32 machine screws of appropriate length, with adapters, firmly secured in place. To mount gage on 1-1/4"-2" pipe, order optional A-610 pipe mounting kit.

5. To zero the gage after installation

Set the indicating pointer exactly on the zero mark, using the external zero adjust screw on the cover at the bottom. Note that the zero check or adjustment can only be made with the high and low pressure taps both open to atmosphere.

Operation

Positive Pressure: Connect tubing from source of pressure to either of the two high pressure ports. Plug the port not used. Vent one or both low pressure ports to atmosphere.

Negative Pressure: Connect tubing from source of vacuum or negative pressure to either of the two low pressure ports. Plug the port not used. Vent one or both high pressure ports to atmosphere.

Differential Pressure: Connect tubing from the greater of two pressure sources to either high pressure port and the lower to either low pressure port. Plug both unused ports.

When one side of the gage is vented in dirty, dusty atmosphere, we suggest an A-331 Filter Vent Plug be installed in the open port to keep inside of gage clean.

A. For portable use of temporary installation use 1/8" pipe thread to rubber tubing adapter and connect to source of pressure with rubber or Tygon tubing.

B. For permanent installation, 1/4" O.D., or larger, copper or aluminum tubing is recommended. See accessory bulletin S-101 for fittings.

Ordering Instructions:

When corresponding with the factory regarding Magnehelic® gage problems, be sure to include model number, pressure range, and any special options. Field repair is not recommended; contact the factory for repair service.

MAINTENANCE

Maintenance: No lubrication or periodic servicing is required. Keep case exterior and cover clean. Occasionally disconnect pressure lines to vent both sides of gage to atmosphere and re-zero. Optional vent valves, (bulletin S-101), should be used in permanent installations.

Calibration Check: Select a second gage or manometer of known accuracy and in an appropriate range. Using short lengths of rubber or vinyl tubing, connect the high pressure side of the Magnehelic gage and the test gage to two legs of a tee. Very slowly apply pressure through the third leg. Allow a few seconds for pressure to equalize, fluid to drain, etc., and compare readings. If accuracy unacceptable, gage may be returned to factory for recalibration. To calibrate in the field, use the following procedure.

Calibration:

1. With gage case, held firmly, loosen bezel, by turning counterclockwise. To avoid damage, a canvas strap wrench or similar tool should be used.
2. Lift out plastic cover and "O" ring.
3. Remove scale screws and scale assembly. Be careful not to damage pointer.
4. The calibration is changed by moving the clamp. Loosen the clamp screw(s) and move slightly toward the helix if gage is reading high, and away if reading low. Tighten clamp screw and install scale assembly.
5. Place cover and O-ring in position. Make sure the hex shaft on inside of cover is properly engaged in zero adjust screw.
6. Secure cover in place by screwing bezel down snug. Note that the area under the cover is pressurized in operation and therefore gage will leak if not properly tightened.
7. Zero gage and compare to test instrument. Make further adjustments as necessary.

Caution: If bezel binds when installing, lubricate threads sparingly with light oil or molybdenum disulphide compound.

Warning: Attempted field repair may void your warrenty. Recalibration or repair by the user is not recommended. For best results, return gage to the factory. Ship prepaid to:

Dwyer Instruments, Inc.

Attn: Repair Dept.

102 Indiana Highway 212

Michigan City, IN 46360

Trouble Shooting Tips:

•*Gage won't indicate or is sluggish.*

1. Duplicate pressure port not plugged.
2. Diaphragm ruptured due to overpressure.
3. Fittings or sensing lines blocked, pinched, or leaking.
4. Cover loose or "O"ring damaged, missing.
5. Pressure sensor, (static tips, Pitot tube, etc.) improperly located.
6. Ambient temperature too low. For operation below 20°F, order gage with low temperature, (LT) option.

•Pointer stuck-gage can't be zeroed.

1. Scale touching pointer.
2. Spring/magnet assembly shifted and touching helix.

3. Metallic particles clinging to magnet and interfering with helix movement.

4. Cover zero adjust shaft broken or not properly engaged in adjusting screw.

We generally recommend that gages needing repair be returned to the factory. Parts used in various sub-assemblies vary from one range of gage to another, and use of incorrect components may cause improper operation. After receipt and inspection, we will be happy to quote repair costs before proceeding.

Consult factory for assistance on unusual applications or conditions.

Use with air or compatible gases only.

©Copyright 2001 Dwyer Instruments, Inc.
Printed in U.S.A. 4/01 FR# 12-440212-00 Rev. 3

DWYER INSTRUMENTS, INC.
P.O. BOX 373 • MICHIGAN CITY, INDIANA 46361 U.S.A.
Phone: 219/879-8000 www.dwyer-inst.com
Fax: 219/872-9057 e-mail: info@dwyer-inst.com
Lit-by-Fax 888/891-4953

SERIES 605 MAGNEHELIC®
DIFFERENTIAL PRESSURE INDICATING TRANSMITTER

Specifications - Installation and Operating Instructions

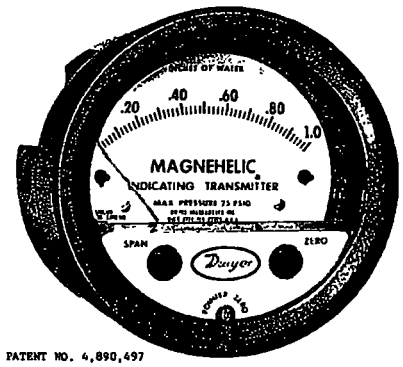

PATENT NO. 4,890,497

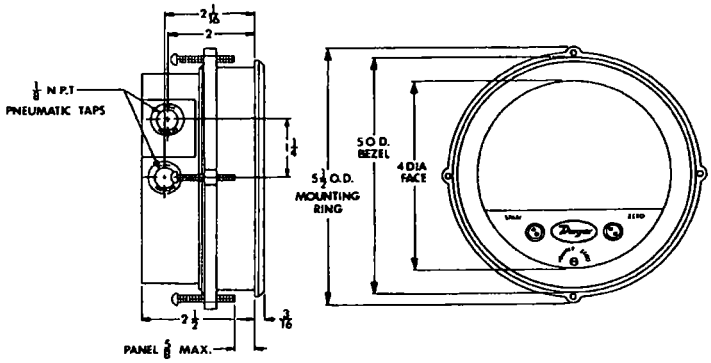

The Dwyer Series 605 Magnehelic® indicating transmitter simultaneously provides local indication on a large, easily read analog scale while also converting that pressure into a standard two-wire, 4-20 mA signal for ranges from 0-0.5 to 0-50"w.c. Positive, negative or differential air and compatible gas pressure can be measured with an accuracy of ± 2% of full scale. The basic mechanical components of the Series 605 Magnehelic® indicating transmitter are similar to those used in the popular, time-proven Magnehelic® differential pressure gage. However, the Series 605 models add electrical conditioning and amplification of a resistance change produced by a silicon strain gage which is cemented to the range spring. This resistance change is the result of the slight flexing which results from spring deflection as pressure is applied to the diaphragm which is directly linked to the spring. Refer to bulletin E-50 for additional information on the design, operation and construction of the Magnehelic® indicating transmitter.

SERIES 605 MODELS & RANGES

MODEL NUMBER	RANGE, INCHES W.C.	MINOR DIVS.
605-0	0-.5	.01
605-1	0-1.0	.02
605-2	0-2.0	.05
605-3	0-3.0	.10
605-6	0-6.0	.20
605-10	0-10	.20
605-20	0-20	.50
605-30	0-30	1.0
605-50	0-50	1.0
MODEL NUMBER	**RANGE, PASCALS**	**MINOR DIVS.**
605-250Pa	0-250	5
605-500Pa	0-500	10
MODEL NUMBER	**RANGE, KILO PASCALS**	**MINOR DIVS.**
605-1.5kPa	0-1.5	.05

SPECIFICATIONS

GENERAL

Maximum Pressure:	25 PSIG
Media Compatibility:	Air & noncombustible, noncorrosive gases

ELECTRICAL

Power Supply:	12.3 to 35 VDC.
Connections:	2 screw terminal block, positive and negative
Output Signal.	4 to 20 mA DC. (limited at 38 mA)
Loop Resistance:	0 to 1135 ohms $R_{Lmax} = \frac{V_{ps} - 12.3V}{20mA}$
Warm-up Time:	5-10 Minutes
Current Consumption:	38 mA max. DC

PERFORMANCE AT ROOM TEMPERATURE

Zero Output:	4 mA
Full Scale Span:	16 mA
Static Accuracy:	± 2% Span
Span & Zero:	Adjustable to 0.05%
Repeatability:	0.5% Span
Resolution:	Infinitesimal

ENVIRONMENTAL

Operating Temperature:	20 to 120°F (dry air)
Compensated Temperature:	30 to 120°F
Thermal Errors:	± 1%/50°F

MECHANICAL

Weight:	1 lb. 10 oz
Span & Zero Adjustments:	Protected potentiometers, externally accessible.
Pressure Connections:	1/8-27 NPT female

STANDARD ACCESSORIES

Mounting ring
Snap ring
(4) 6-32 x 1-1/4 screws (panel mtg.)
(3) 6-32 x 5/16 screws (surface mtg.)
(2) Tubing to 1/8" NPT adapters
(2) 1/8" NPT plugs
Adjustment key

DWYER INSTRUMENTS, INC.
P.O. BOX 373 • MICHIGAN CITY, INDIANA 46360 U.S.A.
Telephone 219/879-8000
Fax 219/872-9057

INSTALLATION

1. **LOCATION:** Select a location where the temperature of the unit will be between 20°F and 120°F. Distance from the receiver is limited only by total loop resistance. See "Electrical Connections." The tubing feeding pressure to the instrument can be run practically any length required but long lengths will increase response time slightly. Avoid surfaces with excessive vibration.
2. **POSITION:** All standard models are calibrated with the diaphragm vertical and should be used in that position for maximum accuracy. If your application requires mounting in other than a vertical position, be sure to specify this when ordering.
3. **PRESSURE CONNECTIONS:** For convenience, two sets of 1/8" NPT female ports are available. Plug the unused set with pipe plugs provided. Attach tubing from positive pressure source to port marked "HI" or from negative (Vacuum) source to port marked "LOW". In either case, opposite port must be vented to atmosphere. In dusty environments, we recommend use of an A-331 Filter Vent Plug to keep interior of instrument clean. For differential pressures the higher source is connected to the "HI" port and lower to the "LOW" port.

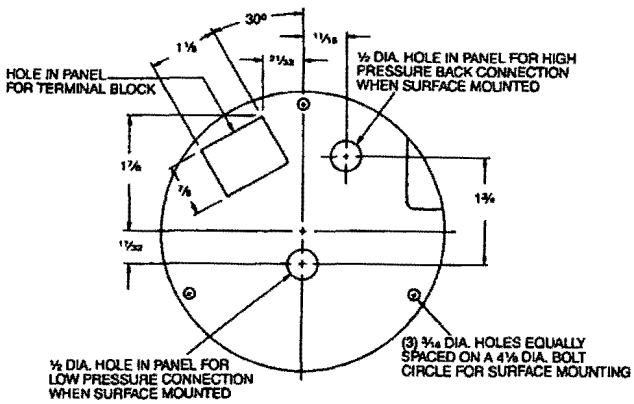

4. **MOUNTING:** The Series 605 Transmitter may be either panel mounted or surface mounted.

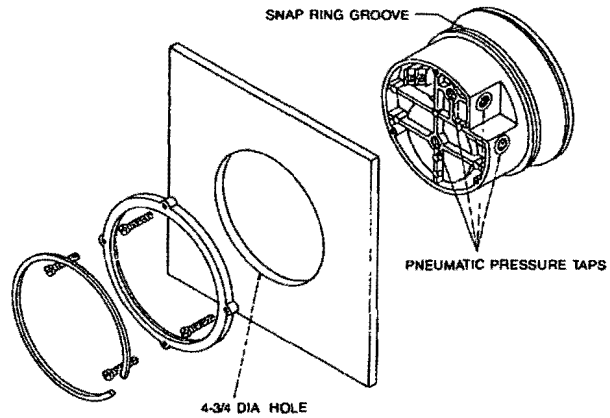

A. **PANEL MOUNTING:** Cut a 4¾" or 120mm dia. hole in panel and insert the complete unit from the front. Slip on the mounting ring and install the split snap ring in the groove on the bezel. Seat the mounting ring against the snap ring and thread the four screws through the tapped holes. Tighten screws against rear of panel.

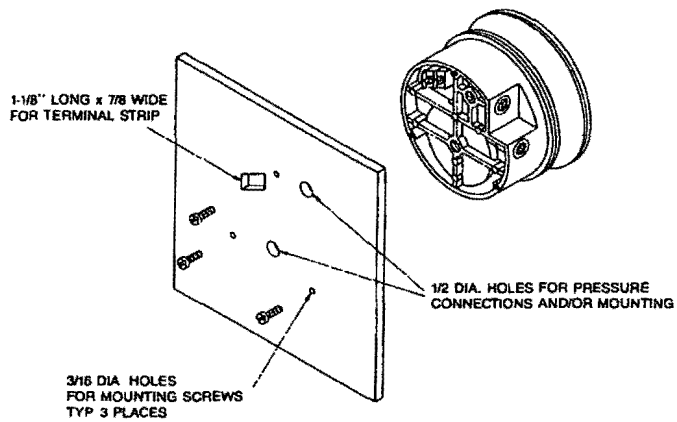

B. **SURFACE MOUNTING:** Drill (3) 3/16" dia. holes for mounting screws and cut (1) 7/8" x 1-1/8" hole for access to terminal strip as shown in hole location drawing. Insert screws from rear of panel and thread into tapped holes on back of transmitter case. If rear pressure connections are to be used, make 1/2" dia. holes located as shown in hole location drawing in left column.

5. **ZEROING:** Once gage/transmitter is mounted in its final position, check to be sure pointer aligns with zero on scale, when no pressure is applied and both low and high pressure ports are vented to atmosphere. To adjust, turn small slotted screw at center-bottom of gage face. Do not move the larger black knobs labeled SPAN and ZERO. These are for use only if a calibration check shows the 4-20 mA output signal to need adjustment. See page 3 under heading OUTPUT RANGING.

ELECTRICAL CONNECTIONS

CAUTION: DO NOT EXCEED SPECIFIED SUPPLY VOLTAGE RATINGS. PERMANENT DAMAGE NOT COVERED BY WARRANTY WILL RESULT. THIS UNIT IS NOT DESIGNED FOR AC VOLTAGE OPERATION.

Electrical connections to the Series 605 Transmitter are made to the two-screw terminal strip on the rear of the case. Polarity is indicated by + and − signs stamped on side. The schematic diagram of the Series 605 transmitter is illustrated in Figure B.

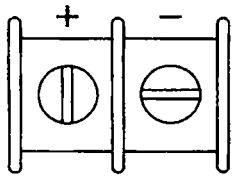

FIG A

An external power supply delivering 12.3 to 35 VDC with a minimum current capability of 40 milliamps must be used to power the control loop in which the Series 605 transmitter is connected. Refer to Fig. B for connection of the power supply, transmitter and receiver. The range of appropriate receiver load resistances (R_L) for the power supply voltage available is given by the formula and graph in Fig. C. Shielded two wire cable is recommended for control loop wiring and the negative side of the loop may be grounded if desired. Note also that the receiver may be connected in either the negative or positive side of the loop, whichever is most convenient. Should polarity of the transmitter or receiver be inadvertantly reversed, the loop will not function properly but no damage will be done to the transmitter.

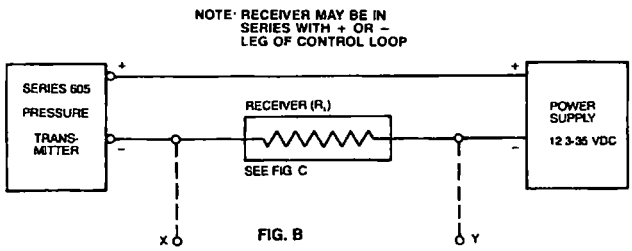

FIG. B

The maximum length of connecting wire between the transmitter and the receiver is a function of wire size and receiver resistance. That portion of the total current loop resistance represented by the resistance of the connecting wires themselves should not exceed 10% of the receiver resistance. For extremely long runs (over 1,000 feet), it is desirable to select receivers with higher resistances in order to keep the size and cost of the connecting leads as low as possible. In installations where the connecting run is no more than 100 feet, connecting lead wire as small as No. 22 Ga. can be used.

The Series 605 transmitters can be used with receivers requiring 1-5 volt input rather than 4-20 mA. If the receiver requires a 1-5 volt input, insert a 250 ohm, ½ watt resistor in series with the current loop but in parallel with the receiver input. Referring to Figure B, R_L becomes the 250 ohm resistor and points X and Y are connected to the receiver input, point X being positive (+) and point Y negative (−) or ground. The resistor should be connected at the panel end of the transmitter current loop close to the receiver input to take advantage of the immunity of the current loop to electrical noise pickup. Most electronic component distributors stock a 249 r, ½ watt, ±1% tolerance metal film resistor which is adequate for this application.

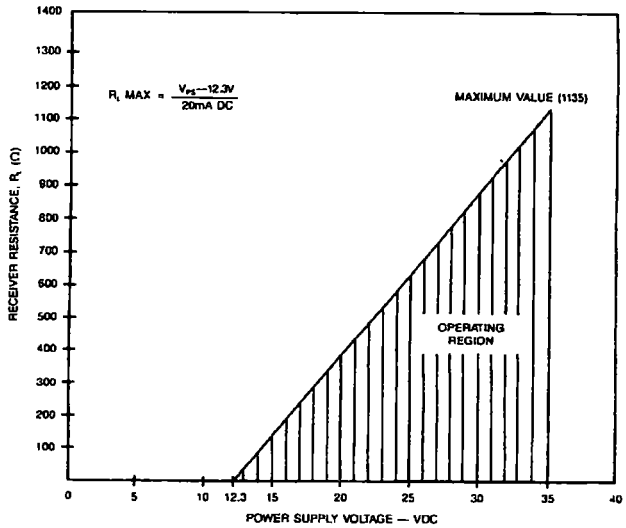

FIG. C

OUTPUT RANGING

Each Series 605 Magnehelic® indicating transmitter is factory calibrated to produce 4 mA at zero scale reading and 20 mA at full scale reading. The following procedure should be used if the pressure versus output signal relationship needs to be checked.

1. With unit connected to the companion receiver per preceding instructions, insert an accurate milliammeter with a full scale reading of approximately 30 mA in series with the current loop.
2. Vent both pressure ports to atmosphere and, if necessary, adjust pointer zero screw to align pointer with zero on scale. A controllable pressure source capable of reaching the full scale range should be connected to either high pressure port. Plug the other high pressure port and vent one or both low pressure ports to atmosphere. The instrument must be ranged in the same position in which it will be used. Standard factory calibration and ranging is done with unit vertical.
3. Apply electrical power to the system and check for proper operation by slowly increasing pressure and observing whether the loop current increases above the 4 mA zero pressure reading.
4. A spanner type key is supplied to adjust span and zero. This helps to reduce unauthorized tampering. Apply pressure until pointer aligns with full scale reading and adjust the SPAN knob for a 20 mA reading.
5. Relieve all pressure, allow a few seconds for settling and adjust the ZERO knob for a 4 mA current loop reading.
6. The SPAN and ZERO controls are slightly interactive so steps 4 & 5 should be repeated a few times until readings of 4 and 20 mA are obtained consistently.
7. Remove the milliammeter from the current loop and proceed with final installation of the transmitter and receiver.

MULTIPLE UNITS WITH COMMON POWER SUPPLY

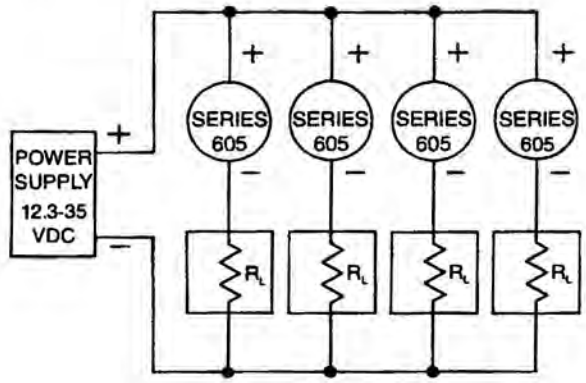

FIGURE D

Several Series 605 transmitters can be operated with a single power supply as depicted above in Figure D. Be careful to specify a supply with sufficient capacity. The minimum current requirement at a given voltage can be calculated by multiplying the number of units x 20 mA. In the example shown this would be 4 x 20 or 80 mA minimum.

MAINTENANCE

Upon final installation of the Series 605 Transmitter and the companion receiver, including the A-701 Digital Readout, no routine maintenance is required. A periodic check of system calibration is recommended. The Series 605 Differential Pressure Transmitter is not field serviceable and should be returned to the factory if service is required. The A-701 Digital Readout should be returned to the manufacturer if service is required. Refer to the A-701 instruction sheet.

©Copyright 1992 Dwyer Instruments, Inc.
Printed in U.S.A. 10/92
FR NO. 01-440559-00

Series 1950 – Explosion-Proof Differential Pressure Switches

Specifications - Installation and Operating Instructions

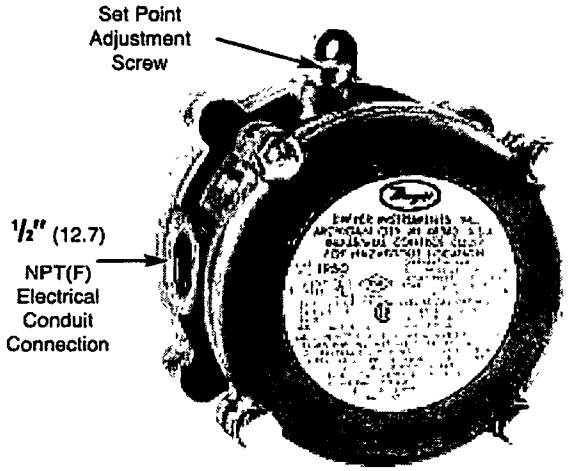

UL and CSA Listed, FM Approved For
CL. I GR. C, D - CL. II GR. E, F, G - CL. III

Series 1950 Switches
Operating ranges and deadbands

To order specify Model Number	Operating Range: Inches, W.C.	Approximate Dead Band	
		At Min. Set Point	At Max. Set Point
1950-02	0.03 to 0.10	0.025	0.05
1950-00	0.07 to 0.15	0.04	0.05
1950-0	0.15 to 0.5	0.10	0.15
1950-1	0.4 to 1.6	0.15	0.20
1950-5	1.4 to 5.5	0.3	0.4
~~1950-10~~	~~2.0 to 11.0~~	~~0.4~~	~~0.5~~
1950-20	4.0 to 20.0	0.4	0.6

Low Pressure

Model Number	Operating Range: PSI	Approximate Dead Band	
		Min. Set Point	Max. Set Point
1950P-2	0.5 to 2.0	0.3 PSI	0.3 PSI
~~1950P-8~~	~~1.0 to 8.0~~	~~1.0 PSI~~	~~1.0 PSI~~
~~1950P-15~~	3.0 to 15.0	0.9 PSI	0.9 PSI
1950P-25	4.0 to 25.0	0.7 PSI	0.7 PSI
1950P-50	15.0 to 50	1.0 PSI	1.5 PSI

High Pressure

Series 1950 Explosion-Proof Differential Pressure Switches combine the best features of the Dwyer Series 1900 Pressure Switch with an integral explosion-proof and weather-proof housing. Each unit is UL & CSA listed; FM approved for use in Class I, Groups C & D; Class II, Groups E, F, & G; and Class III atmospheres (NEMA 7 & 9). They are totally rain-tight for outdoor installations. Twelve models allow set-points from .03 to 20 inches w.c. and from .5 to 50 psi (3.4 to 345 kPa).

Easy access to the SPDT switch for electrical hook-up is provided by removing the top plate of the three-part aluminum housing. Adjustment to the set point of the switch can be made without disassembling the housing. The unit is very compact, about half the weight and bulk of equivalent conventional explosion-proof switches.

CAUTION
For use only with air or compatible gases. Use of the Model 1950 switch with explosive media connected to the Low pressure port (including differential pressure applications in such media) is not recommended. Switch contact arcing can cause an explosion inside the switch housing which, while contained, may render the switch inoperative. If switch is being used to sense a single positive pressure relative to atmosphere, run a line from the low pressure port to a non-hazardous area free of combustible gases. This may increase response time on -0 and -00 models.

NOTE: The last number-letter combination in the model number identifies the switch's electrical rating (number) and diaphragm material (letter). The 2F combination is standard as described in the physical data above. In case of special models, a number 1 rating is the same as 2; a number 3 or 4 rating is 10A 125, 250, 480 VAC; ⅛ H.P. 125 VAC; ¼ H.P. 250 VAC; a number 5 or 6 rating is 1A 125 VAC. Letter B indicates a Buna-N diaphragm; N = Neoprene; S = Silicone; and V = Viton®.

PHYSICAL DATA

Temperature Limits: -40° to 140°F (-40° to 60°C); 1950P-8, -15, -25, -50: 0° to 140°F (-17.8° to 60°C); 1950-02: - 30° to 130°F (-34.4° to 54.4°C).
Rated Pressure: 1950: 45 in. w.c. (0.1 bar); 1950P: 35 psi (2.4 bar); 1950P-50 only: 70 psi (4.8 bar).
Maximum Surge Pressure: 1950: 10 psi (0.7 bar); 1950P: 50 psi (3.4 bar); 1950P-50 only: 90 psi (6.2 bar).
Pressure Connections: ⅛" NPT(F).
Electrical Rating: 15A, 125, 250, 480 volts, 60 Hz. AC Resistive ⅛ H.P. @ 125 volts, ¼ H.P. @ 250 volts, 60 Hz. AC.
Wiring Connections: 3-screw type; common, normally open and normally closed.
Conduit Connections: ½" NPT(F).
Set point adjustment: Screw type on top of housing, field adjustable.
Housing: Anodized cast aluminum.
Diaphragm: Molded fluorosilicone rubber, 02 model: silicone on Nylon.
Calibration Spring: Stainless Steel
Installation: Mount with diaphragm in vertical position.
Weight: 3 ¼ lbs (1.5 kg), 02 model; 4 lbs, 7 oz. (2 kg).

RESPONSE TIME: Because of restrictive effect of flame arrestors, switch response time may be as much as 10-25 seconds where applied pressures are near set point.

DWYER INSTRUMENTS, INC.
P.O. BOX 373 • MICHIGAN CITY, INDIANA 46361, U.S.A.
Phone: 219/879-8000 www.dwyer-inst.com
Fax: 219/872-9057 e-mail: info@dwyer-inst.com
Lit-By Fax: 888/891-4963

Series 1950 – Explosion-Proof Differential Pressure Switches

Specifications - Installation and Operating Instructions

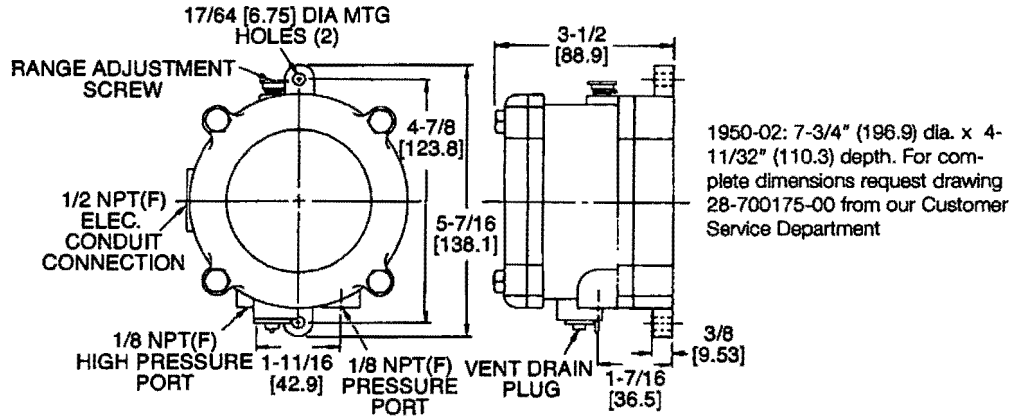

1950 Switch Outline Dimensions

INSTALLATION

1. Select a location free from excess vibration and corrosive atmospheres where temperatures will be within the limits noted under Physical Data on page 1. Switch may be installed outdoors or in areas where the hazard of explosion exists. See page 1 for specific types of hazardous service.

2. Mount standard switches with the diaphragm in a vertical plane and with switch lettering and Dwyer nameplate in an upright position. Some switches are position sensitive and may not reset properly unless they are mounted with the diaphragm vertical.

3. Connect switch to source of pressure, vacuum or differential pressure. Metal tubing with 1/4" O.D. is recommended, but any tubing which will not restrict the air flow can be used. Connect to the two 1/8" NPT(F) pressure ports as noted below:

A. Differential pressures - connect pipes or tubes from source of greater pressure to high pressure port marked HIGH PRESS, and from source of lower pressure to low pressure port marked LOW PRESS.

B. Pressure only (above atmospheric pressure) - connect tube from source of pressure to high pressure port. The low pressure port is left open to atmosphere.

C. Vacuum only (below atmospheric pressure) - connect tube from source of vacuum to low pressure port. The high pressure port is left open to atmosphere.

4. To make electrical connections, remove the three hex head screws from the cover and after loosening the fourth captive screw, swing the cover aside. Electrical connections to the standard single pole, double throw snap switch are provided by means of terminals marked "COM" (common), "NO" (norm open), "NC" (norm closed). The normally open contacts close and the normally closed contacts open when pressure increases beyond the set point. Switch loads for standard models should not exceed the maximum specified current rating of 15 amps resistive. Switch capabilities decrease with an increase in ambient temperature, load inductance, or cycling rate. Whenever an application involves one or more of these factors, the user may find it desirable to limit the switched current to 10 amps or less in the interest of prolonging switch life.

ADJUSTMENT: To Change the Set point

1. Remove the plastic cap and turn the slotted Adjust-ment Screw at the top of the housing clockwise to raise the set point pressure and counter-clockwise to lower the set point. After calibration, replace the plastic cap and re-check the set point.

2. The recommended procedure for calibrating or checking calibration is to use a "T" assembly with three rubber tubing leads, all as short as possible and the entire assembly offering minimum flow restriction. Run one lead to the pressure switch, another to a manometer of known accuracy and appropriate range, and apply pressure through the third tube. Make final approach to the set point very slowly. Note that manometer and pressure switch will have different response times due to different internal volumes, lengths of tubing, fluid drainage, etc. Be certain the switch is checked in the position it will assume in use, i.e. with diaphragm in a vertical plane and switch lettering and Dwyer nameplate in an upright position.

3. For highly critical applications check the set point adjustment and if necessary, reset it as noted in step A.

MAINTENANCE

The moving parts of these switches need no maintenance or lubrication. The only adjustment is that of the set point. Care should be taken to keep the switch reasonably clean. Periodically the vent drain plug should be rotated, then returned to its original position. This will dislodge deposits which could accumulate in applications where there is excessive condensation within the switch.

©Copyright 2001 Dwyer Instruments, Inc.
Printed in U.S.A. 6/01 FR# 26-440332-00 Rev. 9

DWYER INSTRUMENTS, INC.
P.O. BOX 373 • MICHIGAN CITY, INDIANA 46361, U.S.A.
Phone: 219/879-8000 www.dwyer-inst.com
Fax: 219/872-9057 e-mail: info@dwyer-inst.com
Lit-By Fax: 888/891-4963

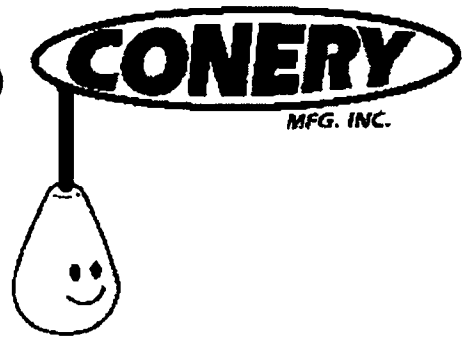

FLOAT SWITCH – PUMP DUTY

2900 MERCURY SERIES – WIDE ANGLE FLOAT SWITCH

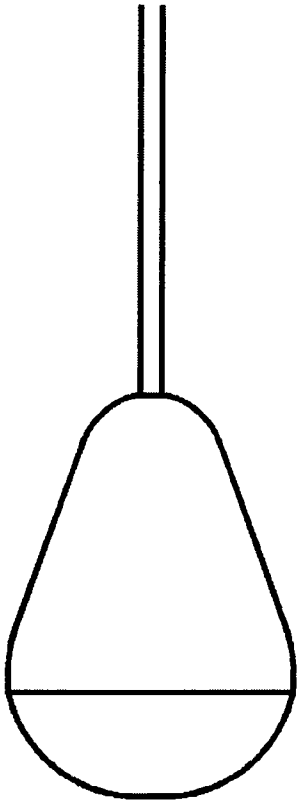

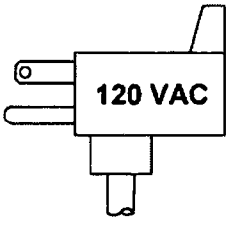

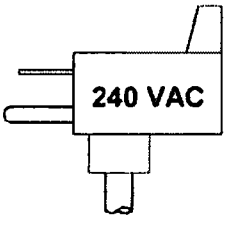

c UL us LISTED
IND. CONT. EQ.
47UF

c SP us

GENERAL

DESIGNED FOR OPERATING SEWAGE PUMPS TO CONTROL LIQUID LEVEL IN SUMPS. THE FLOAT SWITCH CAN ALSO BE UTILIZED TO SIGNIFY SPECIFIC WATER LEVELS OR FOR DIRECT ALARM ACTUATION.

SWITCH VARIATIONS

NORMALLY OPEN (N/O)

THE CONTACTS ARE OPEN (OR OFF) IN THE HANGING POSITION. AS THE FLOAT RISES 45° ABOVE HORIZONTAL, THE CONTACTS BECOME CLOSED AND ACTUATE (TURN ON) THE SWITCH. THIS FLOAT IS GENERALLY USED IN PUMP DOWN APPLICATIONS.

NORMALLY CLOSED (N/C)

THE CONTACTS ARE CLOSED (OR ON) IN THE HANGING POSITION. AS THE FLOAT RISES 45° ABOVE HORIZONTAL, THE CONTACTS BECOME OPEN AND ACTUATE (TURN OFF) THE SWITCH. THIS FLOAT IS GENERALLY USED IN PUMP UP APPLICATIONS.

SINGLE POLE, DOUBLE THROW (SPDT)

A VARIATION OF THE PREVIOUSLY LISTED SWITCHES. THIS FLOAT SWITCH CAN BE WIRED TO OPERATE AS EITHER (BUT NOT BOTH) A NORMALLY OPEN OR NORMALLY CLOSED SWITCH BASED ON THE USER'S NEED.

SWITCH SPECIFICATIONS

2900 SERIES MERCURY FLOAT SWITCHES ARE DESIGNED TO OPERATE UNDER THE FOLLOWING PARAMETERS.

MINIMUM OPERATING TEMPERATURE	-	32 DEGREES F.
MAXIMUM OPERATING TEMPERATURE	-	170 DEGREES F.
ELECTRICAL RATING	-	13 AMP – 120 VAC.
ELECTRICAL RATING	-	½ H.P. @ 120 VAC or 1 H.P. @ 240 VAC
ACTUATION POINT	-	45° ABOVE / BELOW HORIZONTAL.

POWER CORD SPECIFICATIONS

CONDUCTOR CORD – PHYSICAL	-	CHLORINATED POLY ETHYLENE.
ELECTRICAL FOR N/O OR N/C SWITCH	-	16 AWG 2, TYPE SJOOW-300 VOLT.
ELECTRICAL FOR SPDT SWITCH	-	16 AWG 3, TYPE SJOOW-300 VOLT.

OPTIONAL 120 VAC OR 240 VAC PIGGY BACK PLUG

FLOAT SPECIFICATIONS

DURABLE POLYPROPYLENE MATERIAL CONSTRUCTION.
LEAK PROOF, SHOCK PROOF, AND IMPACT RESISTANT.
RESISTANT TO SEWAGE AND WASTEWATER APPLICATIONS.
FOR USE WITH INTRINSICALLY SAFE CIRCUITS. 6" TO 30" PUMPING RANGE

OPTIONAL CORD MOUNTING ASSEMBLIES AVAILABLE (NOT SHOWN)

ZINC PLATED CAST IRON CORD WEIGHT – 1.22 LBS.

POLYPROPYLENE CABLE CLAMP WITH STAINLESS STEEL BAND

CONERY MFG INC 1380 ENTERPRISE PARKWAY ASHLAND, OH 44805
info@conerymfg.com PH (419) 289-1444 FAX (419) 281-0366

2900 SERIES B1,B2

c UL us LISTED

115V PIGGYBACK PLUG (OPTIONAL)

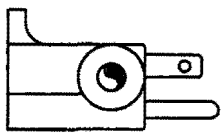

230V PIGGYBACK PLUG (OPTIONAL)

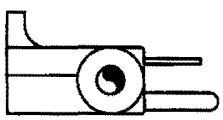

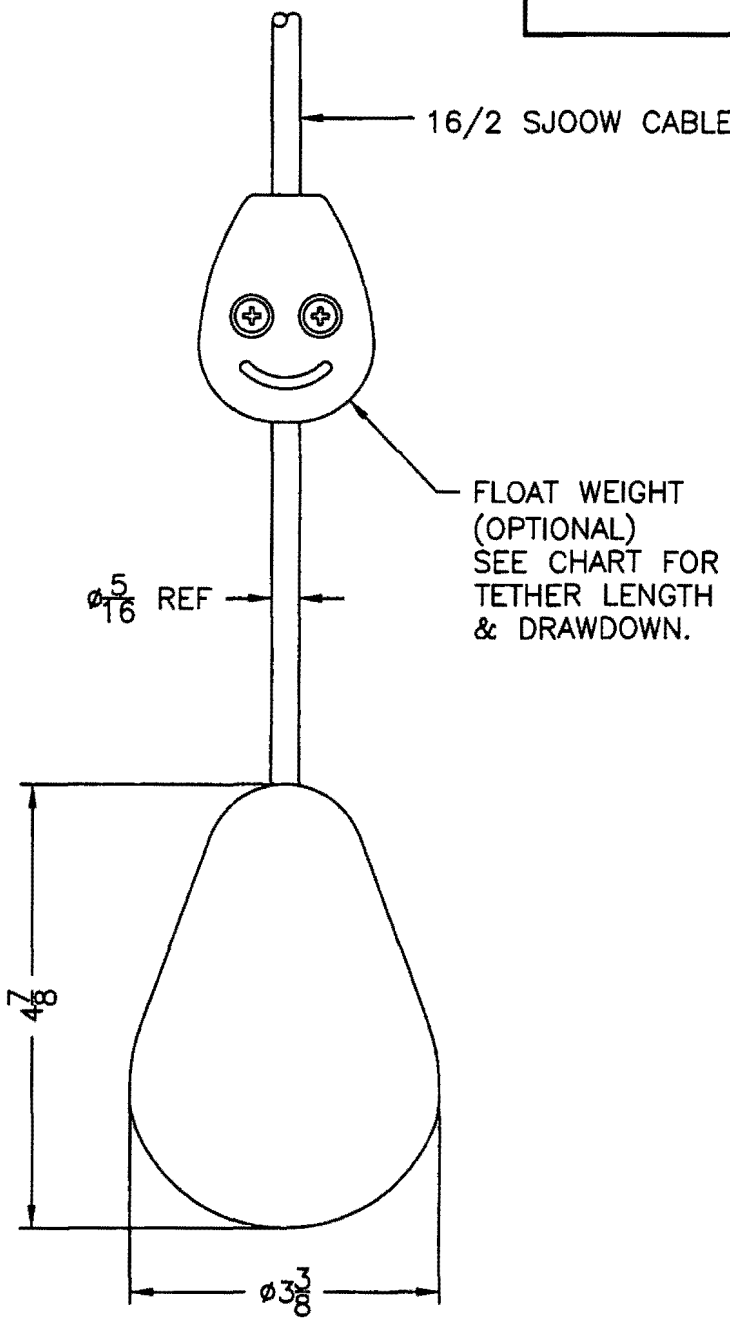

ALL INFORMATION CONTAINED IN THIS DRAWING IS CONFIDENTIAL AND PROPRIETARY TO CONERY MFG, INC.

CONERY MFG INC

CHANGES	TOLERANCES	DRAWN BY	DATE
F	DECIMALS .XXX = ±.005 .XX = ±.010 FRACTIONAL X/X = ±.1/64 ANGLES X° = ±1/2°	D. MIDDLETON	03/18/04
E		MATERIAL SPECIFICATION: WIDE ANGLE FLOAT SWITCH	
D			
C			
B			
A			

SPECIFICATION SHEET
MERCURY FLOAT

SCALE:	PART NO.
HALF	2900 SERIES B1,B2

NOTE: ALL ELECTRICAL DIAGRAMS SHOWN ARE EXAMPLES ONLY, CONSULT WITH LOCAL ELECTRICAL AUTHORITIES AND CODES. DO NOT USE THESE PRODUCTS IN GASOLINE, VOLATILES, OTHER COMBUSTIBLES.

2900 SERIES B1, B2

TYPICAL MOUNTING

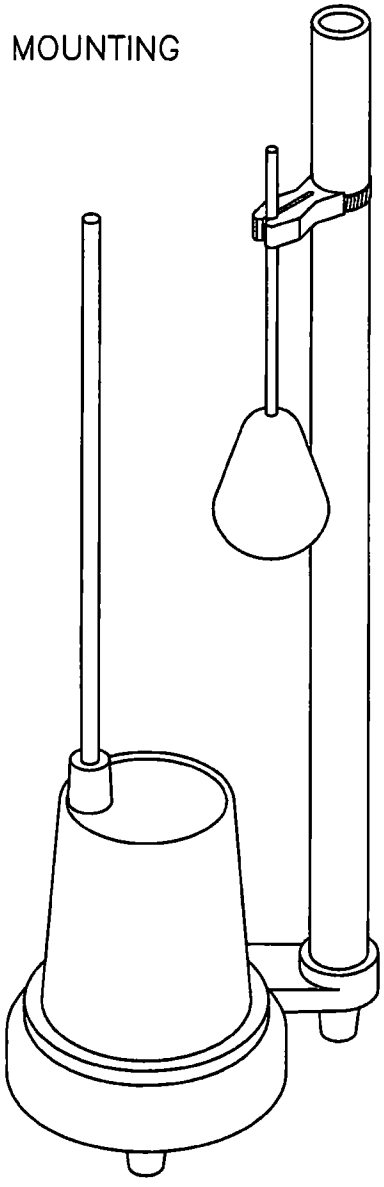

FOR PUMP DOWN USE
(NORMALLY OPEN FLOAT)
FOR PUMP UP USE
(NORMALLY CLOSED FLOAT)

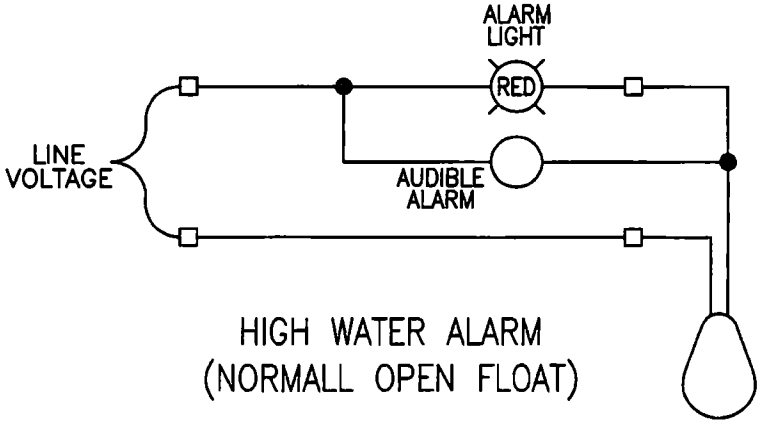

HIGH WATER ALARM
(NORMALL OPEN FLOAT)

ALL INFORMATION CONTAINED IN THIS DRAWING IS CONFIDENTIAL AND PROPRIETARY TO CONERY MFG, INC.

CONERY MFG INC

CHANGES		TOLERANCES	DRAWN BY	DATE
F		DECIMALS .XXX = ±.005 .XX = ±.010 FRACTIONAL X/X = ±.1/64 ANGLES X° = ±1/2°	D. MIDDLETON	03/18/04
E			MATERIAL SPECIFICATION: WIDE ANGLE FLOAT SWITCH	
D				
C				
B				
A				

SPECIFICATION SHEET
MERCURY FLOAT

SCALE:	PART NO.
NONE	2900 SERIES B1,B2

Section 4 – Control Panel

- Control Panel Schematics & Wiring Diagrams
- Main Circuit Breaker (CBM) Installation, Operation & Inspection Instructions
- Allen-Bradley Overload Relay Application Bulletin
- Allen-Bradley 700-FSA3UU23, Timing Relay Specifications

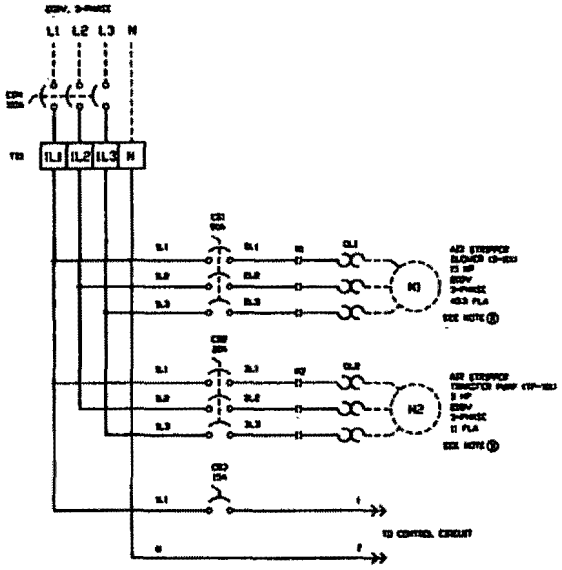

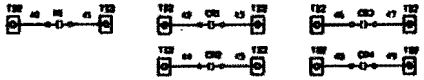

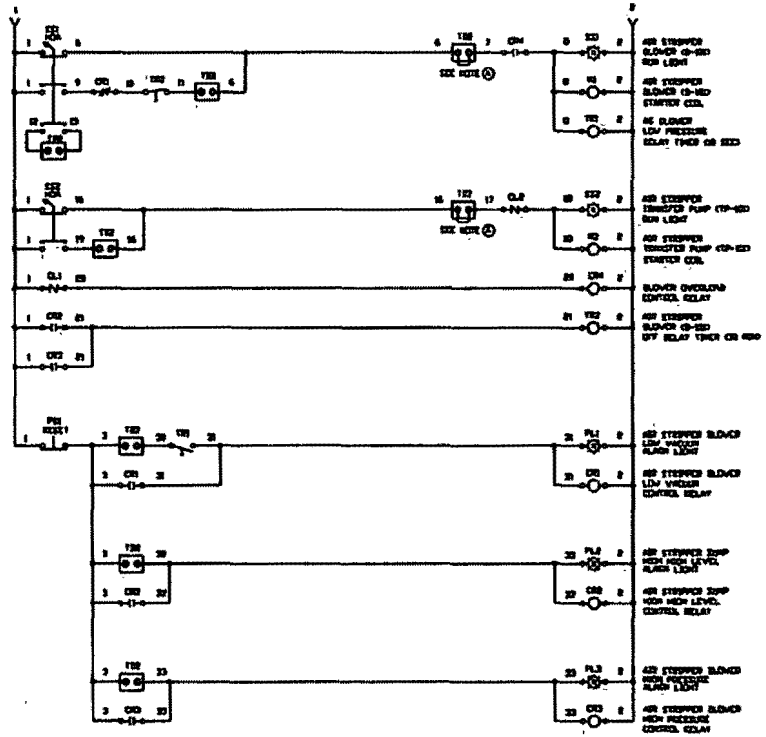

NOTE Ⓐ REMOVE JUMPER IF OPTIONAL THERMISTER IS TO BE CONNECTED

NOTE Ⓑ BASED ON THE 2002 NEC. MOTOR NAMEPLATE MAY VARY SET OVERLOAD RELAYS ACCORDINGLY

Ⓒ LISTED BESIDE PANEL

REV.	DESCRIPTION	DATE	APPR.
	PRELIMINARY		

CONFIDENTIALITY NOTE:
The information contained in this drawing is intended for use only by BISCO Environmental and the organization listed below. The information is confidential and any copying, distribution or dissemination without the consent of BISCO Environmental is STRICTLY PROHIBITED.

DRWN BY	DATE
CRL	6/13/07
CHK BY	DATE
APPR BY	DATE

BISCO Environmental
Soil & Groundwater Remediation Equipment
Taunton, Massachusetts 02780

TITLE: CONTROL PANEL

SD
OMEGA - CA

JOB NO. 12365

SCALE	SIZE	DWG NO.	SHEET	REV
N/A	B	12365GCS	1 OF 3	ASBUILT

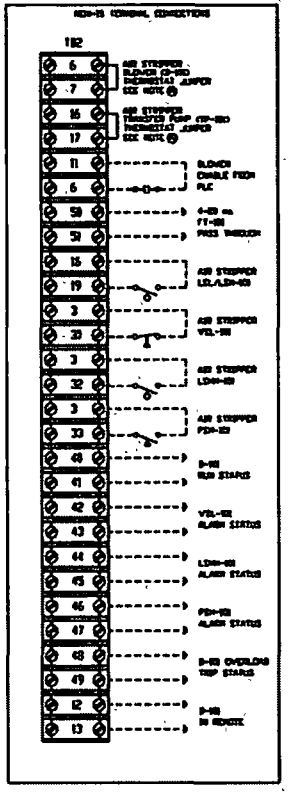

COMPONENT	QTY	TYPE	MODEL #	DESCRIPTION
Control Enclosure	1	Hammond	EN4SD30248GY	NEMA 4, Single door, 30"H x 24"W x 8"D
Control Enclosure	1	Hammond	EP3024	30"H x 24"W Sub panel
Control Enclosure	1	Hammond	2QPL	Padlock Kit
Circuit Breaker (CBM)	1	Cutler Hammer	ED3100L	Circuit Breaker, 240V, 100A, 3-Pole
Circuit Breaker (CBM)	1	Cutler Hammer	FHMVD12B-F	Disconnect Handle for CBM
Circuit Breaker (CB1)	1	Allen Bradley	1492-MCBA390	Circuit Breaker, 240V, 90A, 3-Pole
Circuit Breaker (CB2)	1	Allen Bradley	1492-MCAA320	Circuit Breaker, 240V, 20A, 3-Pole
Circuit Breaker (CB3)	1	Allen Bradley	1492-MCAA115	Circuit Breaker, 120V, 15A, 1-Pole
Distribution Block (TB1)	1	Gould	63133	195A 3-Pole Terminal Block
Contactor (M1)	1	Allen Bradley	100-C60D10	Contactor for 15HP at 208V, 3-phase
Contactor (M2)	1	Allen Bradley	100-C12D10	Contactor for 3HP at 208V, 3-phase
OL Block (M1)	1	Allen Bradley	193-EEGE	18-90A OL block
OL Block (M2)	1	Allen Bradley	193-ED1DB	3.2-16A OL block
HOA Switch (SS1,2)	2	Allen Bradley	800FM-LSL33	Selector switch illuminated, 3-position, Spring return
Latch Mechanism (SS1,2)	2	Allen Bradley	800F-MN5G	Latch, power module
Switch contact (SS1,2)	5	Allen Bradley	800F-X10	Normally open contact
Pilot Light (PL1-3)	3	Allen Bradley	800FP-P4	Pilot light, LED, red
Pilot Light (PL1-3)	3	Allen Bradley	800F-MN5R	Pilot light, LED, red
Control Relay (CR1-5)	5	Idec	RU4S-A110	Control relay, 120V, 4-pole
Control Relay (CR1-5)	5	Idec	SY4S-05	Control relay socket
Timing Relay (TR1,2)	2	Allen Bradley	700-FSA3UU23	SPDT, on delay timing relay
Reset Button (PB1)	1	Allen Bradley	800FM-F2	Pushbutton, momentary, black, flush
Reset Button (PB1)	1	Allen Bradley	800F-ALM	Latch
Reset Button (PB1)	1	Allen Bradley	800F-X01	Normally closed contact

NOTE ⑥ REMOVE JUMPER IF OPTIONAL THERMISTOR IS TO BE CONNECTED

NOTE ⑪ WIRED ON THE 3000 VDC, OPTION, CONTACT MAY TRIP, SET OVERLOAD RELAYS ACCORDINGLY

UL LISTED SUB PANEL

REV.	DESCRIPTION	DATE
	PRELIMINARY	

CONFIDENTIALITY NOTE:
The information contained in this drawing is intended for use only by BISCO Environmental and the organization listed below. The information is confidential and any copying, distribution or dissemination without the consent of BISCO Environmental is STRICTLY PROHIBITED.

DRWN BY CRL DATE 8/13/07
CHK BY DATE
APPR BY DATE

BISCO Environmental
Soil & Groundwater Remediation Equipment
Taunton, Massachusetts 02780

TITLE: CONTROL PANEL

SD OMEGA - CA. JOB NO. 12365

SCALE	SIZE	DWG NO.	SHEET	REV
N/A	B	12365GCS	2 OF 3	AS BUILT

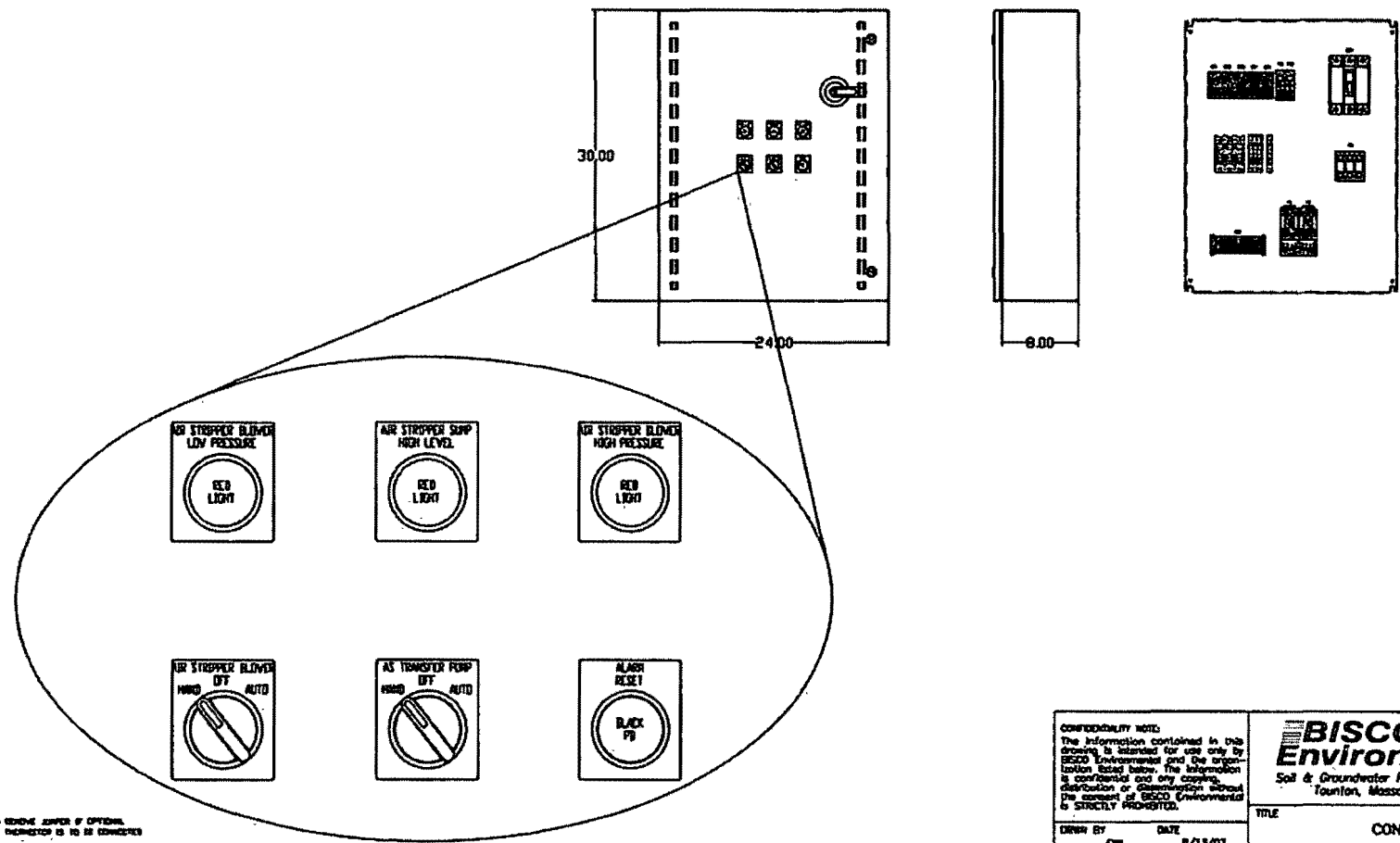

NOTE (A): REMOVE JUMPER IF OPTIONAL THERMISTOR IS TO BE CONNECTED

NOTE (B): [illegible]

UL LISTED SIGN PANEL

REV.	DESCRIPTION	DATE
	PRELIMINARY	

CONFIDENTIALITY NOTE:
The information contained in this drawing is intended for use only by BISCO Environmental and the organization listed below. The information is confidential and any copying, distribution or dissemination without the consent of BISCO Environmental is STRICTLY PROHIBITED.

BISCO Environmental
Soil & Groundwater Remediation Equipment
Taunton, Massachusetts 02780

DRAWN BY: GWL	DATE: 8/13/07	TITLE: CONTROL PANEL	
CHK BY	DATE	SEI OMEGA - CA	JOB NO. 12365
APPR BY	DATE	SCALE: N/A · SIZE: B · DWG NO. 12365GCS	SHEET 3 OF 3 · REV ASBUILT

Installation Instructions for EHD, EDB, EDS, ED, EDH, EDC, FDB, FD, HFD, FDC Circuit Breakers and Molded Case Switches

⚠ WARNING

DO NOT ATTEMPT TO INSTALL OR PERFORM MAINTENANCE ON EQUIPMENT WHILE IT IS ENERGIZED. DEATH, SEVERE PERSONAL INJURY OR SUBSTANTIAL PROPERTY DAMAGE CAN RESULT FROM CONTACT WITH ENERGIZED EQUIPMENT. ALWAYS VERIFY THAT NO VOLTAGE IS PRESENT BEFORE PROCEEDING WITH THE TASK, AND ALWAYS FOLLOW GENERALLY ACCEPTED SAFETY PROCEDURES.

CUTLER-HAMMER IS NOT LIABLE FOR THE MISAPPLICATION OR MISINSTALLATION OF ITS PRODUCTS.

The user is cautioned to observe all recommendations, warnings and cautions relating to the safety of personnel and equipment, as well as all general and local health and safety laws, codes, and procedures.

The recommendations and information contained herein are based on Cutler-Hammer experience and judgment, but should not be considered to be all-inclusive or covering every application or circumstance which may arise. If any questions arise, contact Cutler-Hammer for further information or instructions.

1. INTRODUCTION

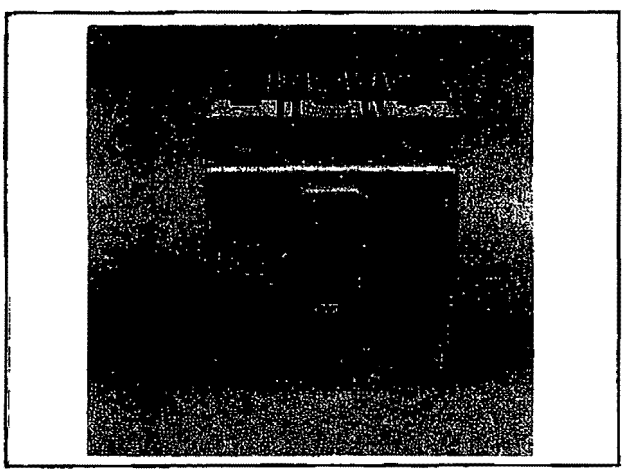

Fig. 1-1. Model D Series C Circuit Breaker and Molded Case Switches

The F-Frame Series C circuit breakers (Fig. 10-1) Types FDB, FD, HFD, and FDC are rated from 15A to 225A (150A for 1 pole versions) continuous current and are available as thermal-magnetic circuit breakers and molded case switches. Type EHD circuit breakers and molded case switches are rated 100A maximum. Types EDB, EDS, ED, EDH, and EDC are rated from 100A to 225A continuous current and are available as thermal-magnetic circuit breakers. (Molded case switches are available rated at 100A, 150A, and 225A.) Circuit breakers are listed in accordance with Underwriters Laboratories, Inc. Standard UL489, and Types EHD, EDB, EDS, ED, FDB, EDH, EDC, FD, HFD, and FDC satisfy the (P1) requirements of the International Electrotechnical Commission Recommendation No. IEC 157-1. Molded case switches are listed in accordance with UL1087. For this publication, the term circuit breaker also includes molded case switches. For more information, see Frame Book 29-101.

2. INSTALLATION

The installation procedure consists of inspecting and mounting the circuit breaker, connecting and torquing the line and load terminations, and attaching terminal shields or barriers, when supplied. To install the circuit breaker, perform the following steps:

Note: The EHD, EDB, EDS, ED, EDH, EDC, FDB, FD, HFD, and FDC circuit breakers are factory sealed. UL489 requires that internal accessories be installed at the factory. Where local codes and standards permit and UL listing is not required, internal accessories can be field installed. Accessory installation should be done before the circuit breaker is mounted and connected.

Mounting hardware and unmounted terminations (where required) are supplied in separate packages.

2-1. Make sure that the circuit breaker is suitable for the installation by comparing nameplate data with system requirements. Inspect the circuit breaker for completeness and check for damage before mounting.

⚠ WARNING

BEFORE MOUNTING THE CIRCUIT BREAKER IN AN ELECTRICAL SYSTEM, MAKE SURE THERE IS NO VOLTAGE PRESENT WHERE WORK IS TO BE PERFORMED. THE VOLTAGES IN ENERGIZED EQUIPMENT CAN CAUSE INJURY OR DEATH.

2-2. Depending on the equipment configuration, the circuit breaker can be mounted using different styles of hardware. The following steps describe how to mount the circuit breaker using standard hardware. When special hardware is needed (for example, with the electrical operator), the instruction leaflet describing the accessory also describes the special mounting arrangements.

Note: Before mounting the circuit breaker, check if the termination devices should be installed first. See terminations instructions.

2-3. To mount the circuit breaker, perform the following steps:

a. For individual mounting panels, make sure that mounting panel is predrilled using bolt drilling plan (Fig. 2-1). For panelboard mounting, only load end support mounting holes are required. For deadfront cover applications make sure panel cover is cut out to correct escutcheon dimensions (Fig. 2-2).

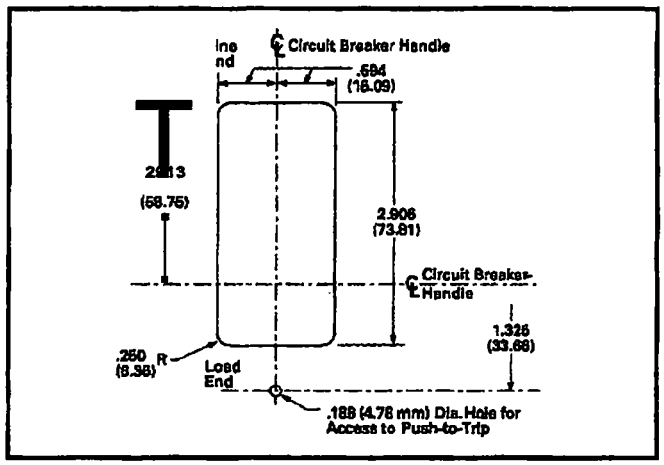

Fig. 2-2. Circuit Breaker Escutcheon Dimensions

2-4. If an optional terminal end cover is to be installed with the circuit breaker (usually line end only), it must be positioned before cable is connected to terminals.

CAUTION

DO NOT EXCEED CONNECTOR/BUS CAPACITY IN CUTLER-HAMMER POWER LINE 3A AND 4 PANELS. USE CONNECTOR KIT KPRL3AFD3 (3 POLE) AND KPRL3AFD2 (2 POLE) IN PANEL TYPE PRL3A AND KPRL4FD (3 POLE) AND KPRL4FD2 (2 POLE) IN PANEL TYPE PRL4.

b. If circuit breaker includes factory installed internal accessories, make sure accessory wiring can be reached when the circuit breaker is mounted.

c. Position circuit breaker on mounting surface.

d. Install mounting screws, washers, and nuts. Tighten screws firmly, but do not exceed 28 pound-inches (3.16 N.m.).

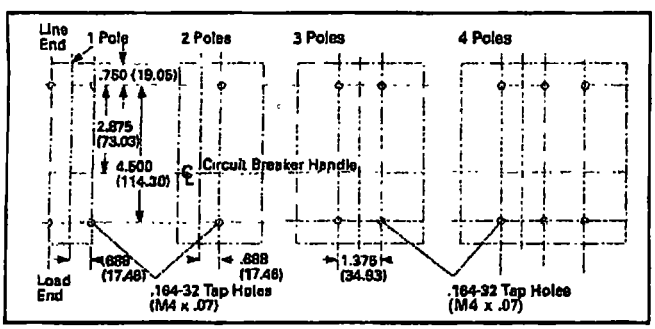

Fig. 2-1. Circuit Breaker Mounting Bolt Drilling Plans

CAUTION

WHEN ALUMINUM CONDUCTORS ARE USED, THE APPLICATION OF A SUITABLE JOINT COMPOUND IS RECOMMENDED TO REDUCE THE POSSIBILITY OF TERMINAL OVERHEATING. TERMINAL OVERHEATING CAN CAUSE NUISANCE TRIPPING AND DAMAGE TO THE CIRCUIT BREAKER.

2-5. After mounting the circuit breaker, line and load terminals and accessory leads should be connected. (See accessory schematic diagram on side of circuit breaker.)

Note: If terminal shield or interphase barriers are to be installed on the circuit breaker, install them after the terminals are connected.

2-6. If required, install terminal shield on circuit breaker cover with mounting screws provided.

2-7. If required, install an interphase barrier by sliding barrier into dovetail grooves between terminals.

2-8. After the circuit breaker is installed, check all mounting hardware and terminal connecting hardware for correct torque loading. Torque values for line/load terminals are given in Tables 2-1 and 2-2 and on the circuit breaker nameplate.

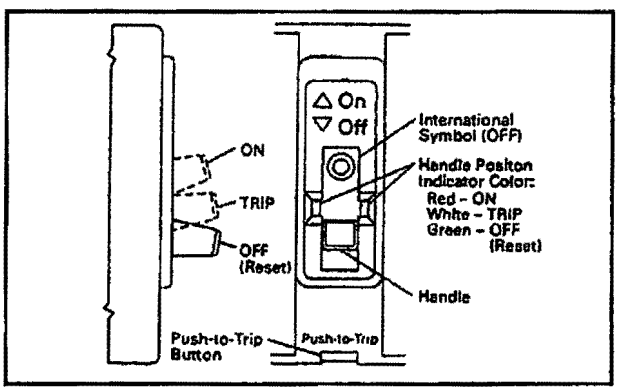

Fig. 3-1. Circuit Breaker Manual Controls

3. MANUAL OPERATION

Manual operation of the circuit breaker is controlled by the circuit breaker handle and the PUSH-TO-TRIP button. The circuit breaker handle has three indicated positions, two of which are shown on the cover with raised lettering to indicate ON and OFF. On the sliding handle barrier, ON, OFF, and trip are also shown by a color-coded strip for each circuit breaker handle position: red for ON, white for tripped, and green for OFF. On the sliding handle barrier, ON/OFF is also shown with the international symbols 1/0 (See Fig. 3-1.)

CIRCUIT BREAKER RESET
After tripping, the circuit breaker is reset by moving the circuit breaker handle to the extreme OFF position.

Note: In the event of a thermal trip, the circuit breaker cannot be reset until the thermal element cools.

PUSH-TO-TRIP BUTTON
The **PUSH-TO-TRIP** button checks the tripping function and is used to periodically exercise the operating mechanism.

4. INSPECTION AND FIELD TESTING

Series C molded case circuit breakers are designed to provide years of almost maintenance-free operation. The following procedure describes how to inspect and test a circuit breaker in service.

INSPECTION
Circuit breakers in service should be inspected periodically. The inspection should include the following checks 4-1 thru 4-7.

⚠ WARNING

BEFORE INSPECTING THE CIRCUIT BREAKER IN AN ELECTRICAL SYSTEM, MAKE SURE THE CIRCUIT BREAKER IS SWITCHED TO THE OFF POSITION AND THERE IS NO VOLTAGE PRESENT WHERE WORK IS TO BE PERFORMED. SPECIAL ATTENTION SHOULD BE PAID TO REVERSE FEED APPLICATIONS TO ENSURE NO VOLTAGE IS PRESENT. THE VOLTAGES IN ENERGIZED EQUIPMENT CAN CAUSE INJURY OR DEATH.

⚠ CAUTION

MAKE SURE THAT CLEANING AGENTS OR SOLVENTS USED TO CLEAN THE CIRCUIT BREAKER ARE SUITABLE FOR THE JOB. SOME COMMERCIAL CLEANING AGENTS WILL DAMAGE THE NAMEPLATES OR MOLDED PARTS.

4-1. Remove dust, dirt, soot, grease, or moisture from the surface of the circuit breaker using a lint-free dry cloth, brush, or vacuum cleaner. Do not blow debris into circuit breaker. If contamination is found, look for the source and eliminate the problem.

4-2. Switch circuit breaker to ON and OFF several times to be sure that the mechanical linkages are free and do not bind. If mechanical linkages are not free, replace circuit breaker.

4-3. Press the PUSH-TO-TRIP button to mechanically trip the circuit breaker. Trip, reset, and switch circuit breaker ON several times. If mechanism does not reset each time the circuit breaker is tripped, replace the circuit breaker.

4-4. Check base, cover, and operating handle for cracks, chipping, and discoloration. Circuit breakers should be replaced if cracks or severe discoloration is found.

4-5. Check terminals and connectors for looseness or signs of overheating. Overheating will show as discoloration, melting, or blistering of conductor insulation, or as pitting or melting of conductor surfaces due to arcing. If there is no evidence of overheating or looseness, do not disturb or tighten the connections. If there is evidence of overheating, terminations should be cleaned or replaced. Before re-energizing the circuit breaker, all terminations and cable should be refurbished to the condition when originally installed.

4-6. Check circuit breaker mounting hardware. Tighten if necessary.

4-7. Check area where circuit breaker is installed for any safety hazards, including personal safety and fire hazards. Exposure to certain types of chemicals can cause deterioration of electrical connections.

FIELD TESTING

Any field testing should be done in accordance with NEMA Standards Publication AB2 — 1984.

EATON | Cutler-Hammer
170 Industry Drive
Pittsburgh, PA 15275

Style No. 6620C41H08
Effective 11/03
Printed in U.S.A./TQC

Bulletin 193 E1 PLUS Overload Relay Application and Installation

(Cat 193-ED1_ _ , 193*-EE_ _)

Installation

ATTENTION: To prevent electrical shock, disconnect from power source before installing or servicing. Install in suitable enclosure. Keep free from contaminants.

193-E___ = 3 Ø
193S-E___ = 1 Ø

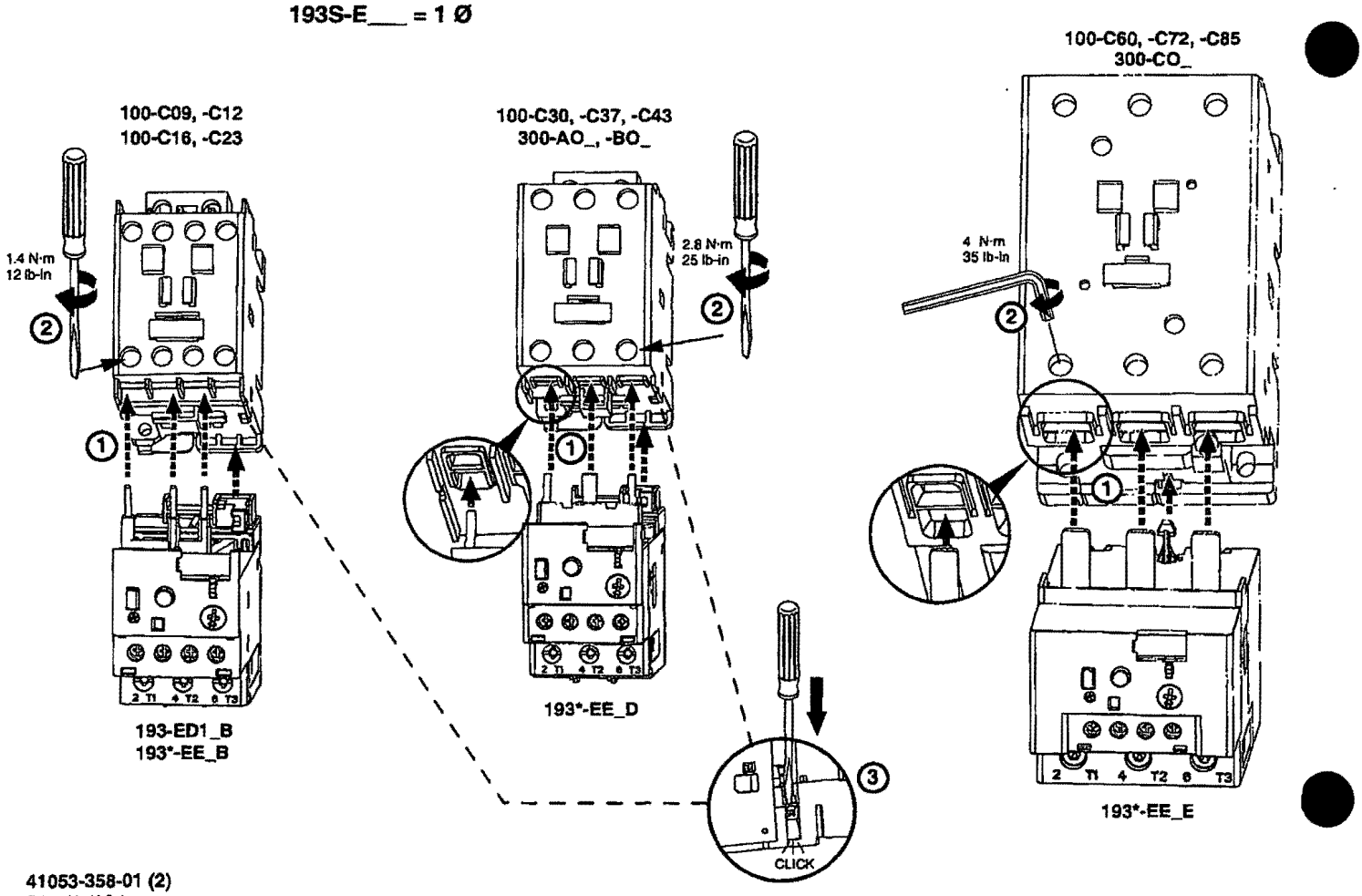

41053-358-01 (2)
Printed in U.S.A.

E1 PLUS Features

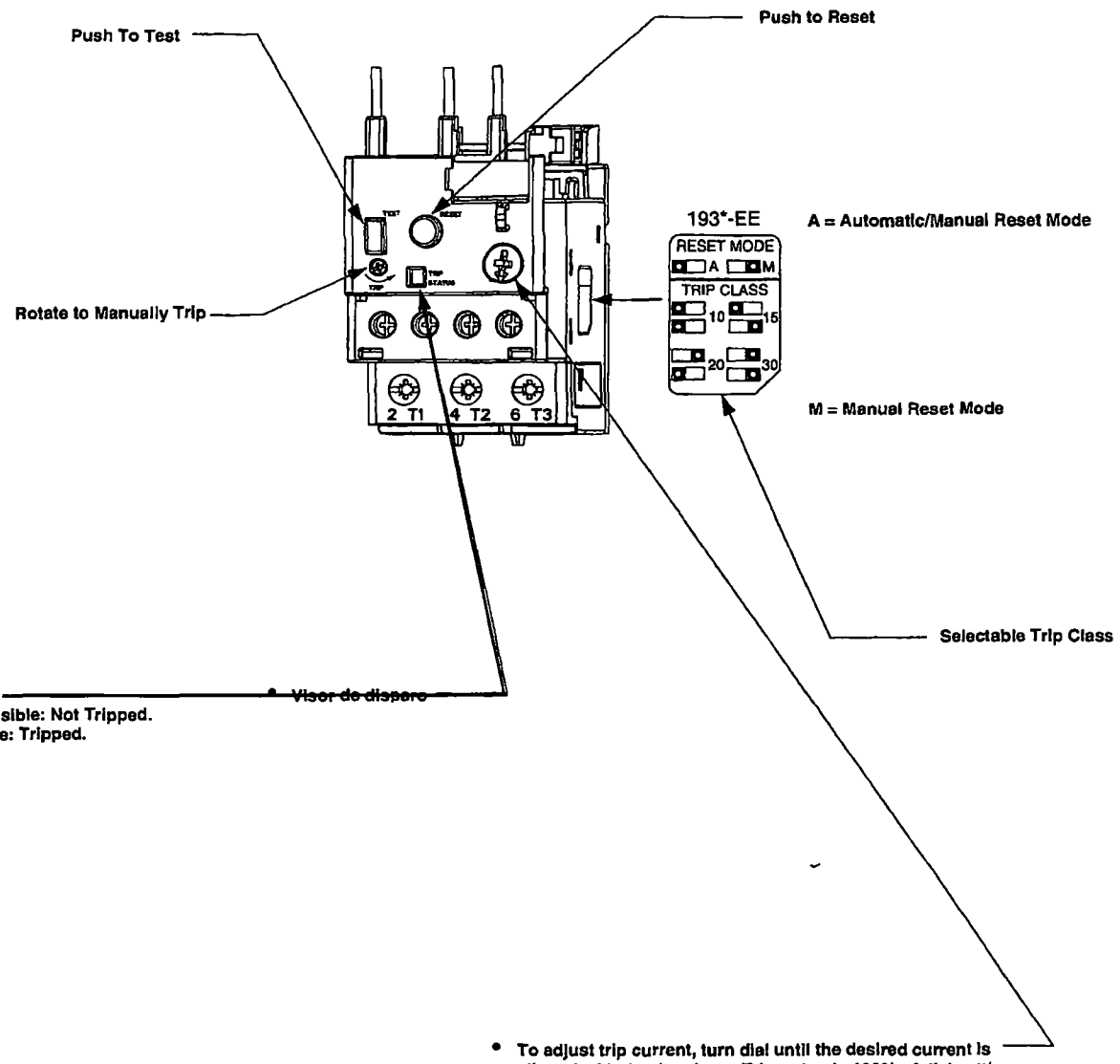

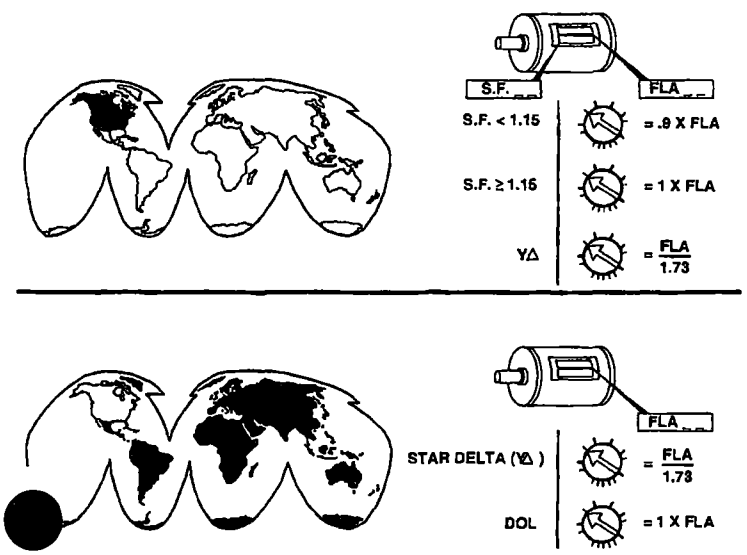

ATTENTION: Do not use automatic reset mode in applications where unexpected automatic restart of the motor can cause injury to persons or damage to equipment.

Contact Status

Normal		Test	Tripped
95 — 96	Closed	Open	Open
9798	Open	Open	Closed
9795 / 9896		9795 / 9896	9795 / 9896

Wiring Diagram - 3 Phase Full Voltage DOL Starter

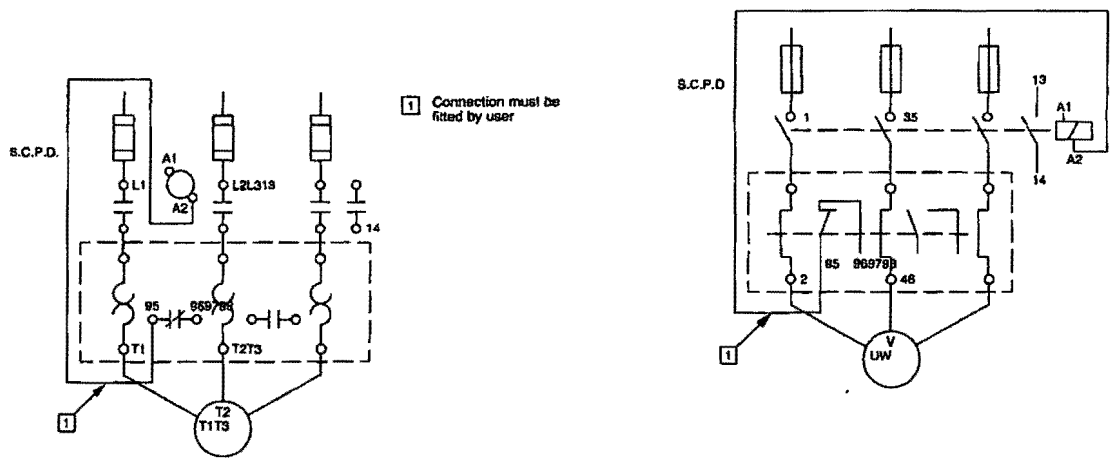

Wiring Diagram - 1 Phase Full Voltage DOL Starter (193S-____)

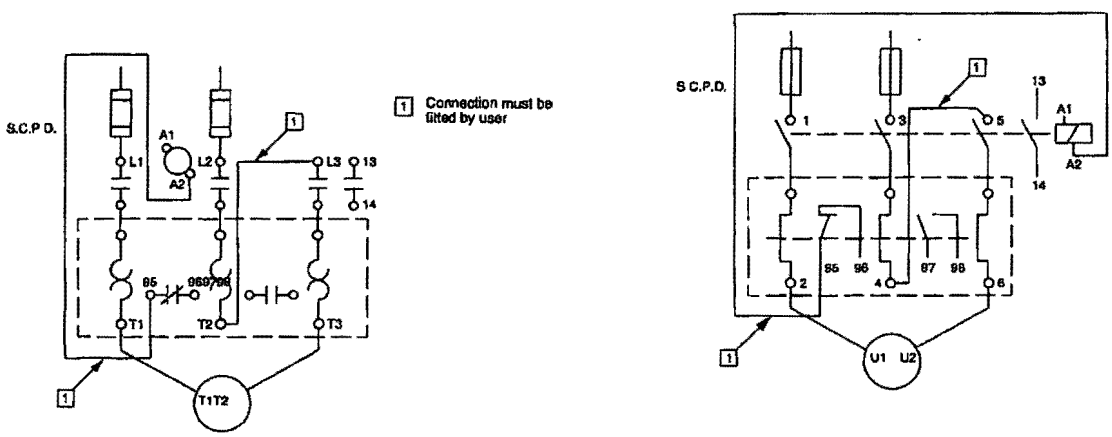

Main Connections

Terminal Screw	193-ED1_B * 193-EE_B		193-EE_D *		193-EE_E	
	M5		M5		M8	
	1x	2.5 ... 16 mm² 2.5 Nm	1x	2.5 ... 16 mm² 2.5 Nm	1x	4 ... 35 mm² 4 Nm
	2x	2.5 ... 10 mm² 3.4 Nm	2x	2.5 ... 10 mm² 3.4 Nm	2x	4 ... 25 mm² 4 Nm
	1x	2.5 ... 25 mm² 2.5 Nm	1x	2.5 ... 25 mm² 2.5 Nm	1x	4 ... 50 mm² 4 Nm
	2x	6 ...16 mm² 3.4 Nm	2x	6 ...16 mm² 3.4 Nm	2x	4 ... 35 mm² 4 Nm
	1x	14... 6 AWG 22 lb-in	1x	14... 6 AWG 22 lb-in	1x	12 ... 1 AWG 35 lb-in
	2x	14...6 AWG 30 lb-in	2x	14...6 AWG 30 lb-in	2x	6 ... 2 AWG 35 lb-in
		#2		#2		--
		1 x 6 mm		1 x 6 mm		--
		--		--		4 mm

* FOR MULTIPLE CONDUCTOR APPLICATIONS THE SAME SIZE AND STYLE WIRE MUST BE USED.

Control Connections

Terminal Screw	M3	
	1x	0.5 ... 2.5 mm² 0.55 Nm
	2x	0.25 ... 1.5 mm² 0.55 Nm
	1x	0.5 ... 4 mm² 0.55 Nm
	2x	0.2 ... 2.5 mm² 0.55 Nm
	1x	24 ... 10 AWG 5 lb-in
	2x	24 ... 10 AWG 5 lb-in
		#1
		0.6 x 3.5 mm

Cage Clamp Operation (193R-EE)

	0.25 ... 1 mm²
	0.2 ... 1.5 mm²
	24 ... 14 AWG

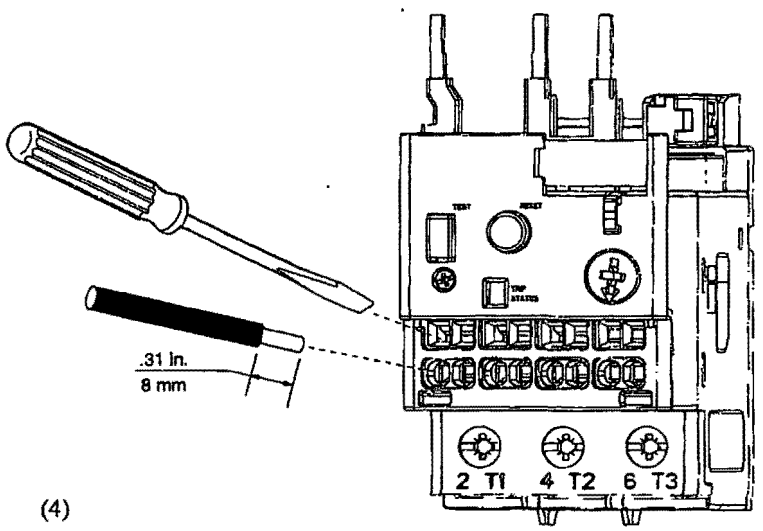

Trip Curve

COLD START — — — — HOT START

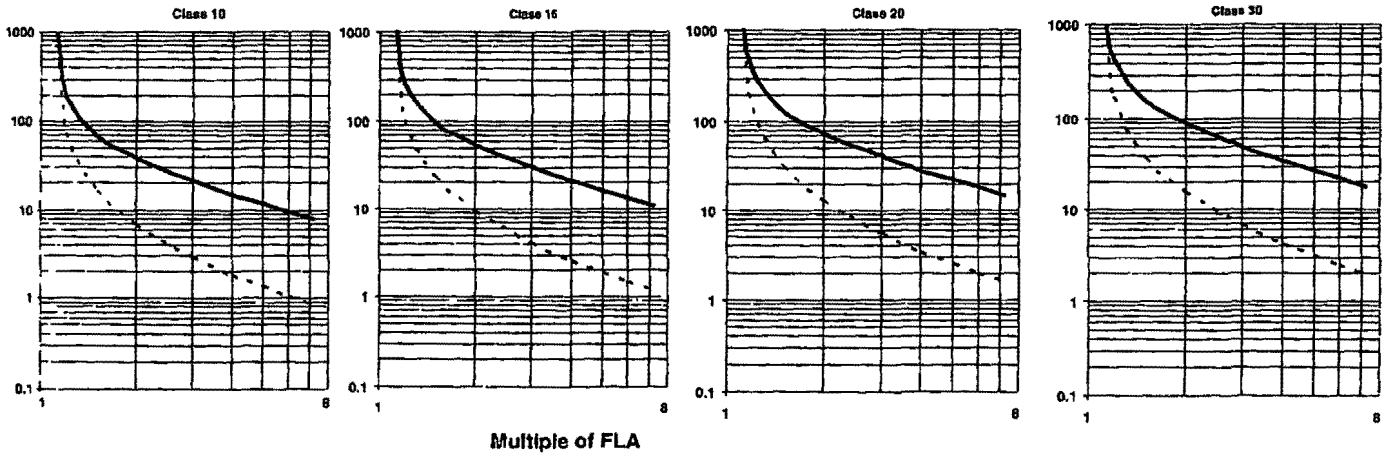

Short Circuit Ratings

Table 1 Standard Fault Short Circuit Ratings per UL508 and CSA 22.2 No. 14

E1 Plus Cat No.		Max. available fault current (kA)	Max. voltage (V)	S.C P.D.
193,193R, 193S	ED1AB, ED1BB, EEAB, EEBB	1	600	Suitable for use with fuses only
	ED1CB, ED1DB, ED1EB, EECB, EEDB, EEEB, EEED, EEFD, EEPB, EERB, EESB, EETD	5		Not restricted to fusing only
	EEEE, EEFE, EEGE, EEUE	10		

Table 2 High Fault Short Circuit Ratings per UL508 and CSA 22.2 No. 14

E1 Plus Cat. No.		Contactor Cat. No.	Max. starter FLC (A)	Max.available fault current (kA)	Max. voltage (V)	Max. UL Class J or CC fuse, CSA HRCI-J
193, 193R	ED1AB, EEAB	100-C09	0.5	100	600	3
	ED1BB, EEBB		1			6
	ED1CB, ED1DB, ED1EB, EECB, EEDB, EEEB	100-C09	9			20
		100-C12	12			20
		100-C16	16			30
		100-C23	23			40
	EEED, EEFD	100-C30	30			50
		100-C37	37			50
		100-C43	43			70
	EEEE, EEFE, EEGE	100-C60	60			80
		100-C72	72			100
		100-C85	85			150

Table 3 Short Circuit Ratings per EN 60947-4-1

E1 Plus Cat. No.		Prospective S.C. current, Ir (kA)	Conditional S.C. current, Iq (kA)	Max. voltage (V)	S.C.P.D.
193,193R, 193S	ED1AB, ED1BB, EEAB, EEBB	1	100	690	Suitable for use with fuses only
	ED1CB, ED1DB, EECB, EEDB, EEPB, EERB	1			Not restricted to fusing only
	ED1EB, EEEB, EEED, EEFD, EEEE, EEFE, EESB, EETD	3			
	EEGE, EEGF, EEUE	5			

Fuse Coordination

Table 1 Type I and Type II Fuse Coordination with Bul. 100-C contactors per EN 60947-4-1

E1 Plus Cat. No		Contactor Cat. No	Max. starter FLC (A)	Prospective S.C. current, Ir (kA)	Conditional S.C. current, Iq (kA)	Max. voltage (V)	Type I Max. Class J or CC fuse (A)	Type II Max. Class J or CC fuse (A)
193,193R	ED1AB, EEAB	100-C09	0.5	1	100	600	3	3
	ED1BB, EEBB		1				6	6
	ED1CB, ED1DB, EECB, EEDB	100-C09	9	1			20	15
		100-C12	12				20	20
		100-C16	16				30	30
		100-C23	23				40	40
	ED1EB, EEEB	100-C09	9	3			20	15
		100-C12	12				20	20
		100-C16	16				30	30
		100-C23	23				40	40
	EEED, EEFD	100-C30	30	3			50	50
		100-C37	37				50	50
		100-C43	43				70	70
	EEEE, EEFE	100-C60	60	3			80	80
		100-C72	72				100	100
		100-C85	85				150	150
	EEGE	100-C60	60	5			80	80
		100-C72	72				100	100
		100-C85	85				150	150

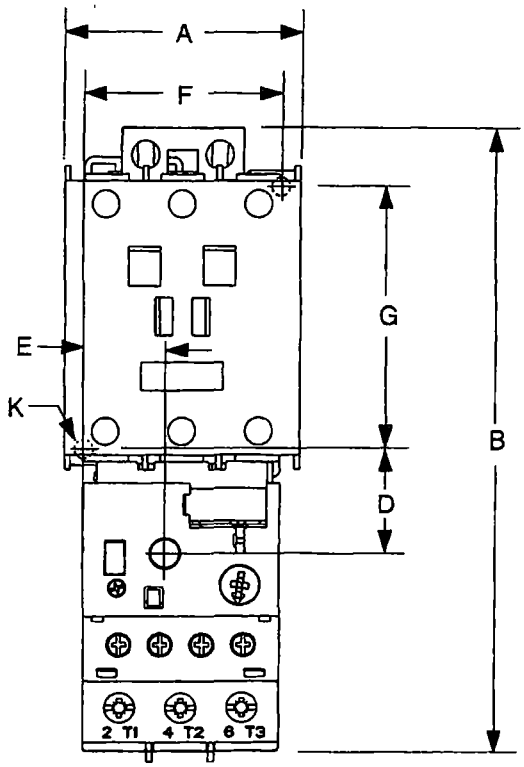

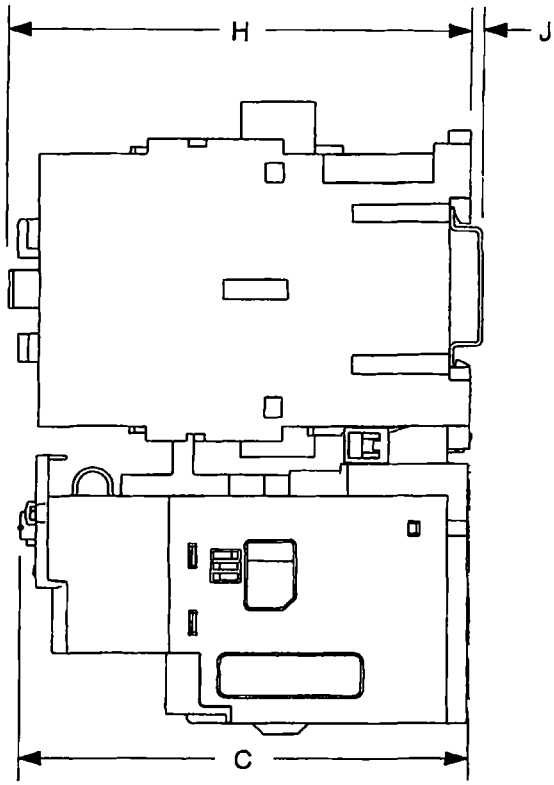

CONTACTOR CAT. NO.	E1 PLUS CAT. NO.		A	B	C	D	E	F	G	H	J	K
100-C09, -C12, -C16, -C23	193-ED1_B, 193*-EE_B	mm (in)	45 (1.76)	146.6 (5.77)	85.2 (3.35)	24.5 (.96)	13.9 (.55)	35 (1.38)	60 (2.36)	86.5 (3.40)	2 (.08)	4.5 (.17)
100-C30, -C37	193*-EE_D	mm (in)	45 (1.76)	146.6 (5.77)	101.2 (3.98)	24.5 (.96)	13.9 (.55)	35 (1.38)	60 (2.36)	104 (4.09)	2 (.08)	4.5 (.17)
100-C43		mm (in)	54 (2.12)	146.6 (5.77)	101.2 (3.98)	24.5 (.96)	18.4 (.74)	45 (1.77)	60 (2.36)	104 (4.09)	2 (.08)	4.5 (.17)
[illegible]-C60, -C72, -C85	193*-EE_E	mm (in)	72 (2.83)	192 (7.57)	120.4 (4.74)	29 (1.14)	23.8 (.94)	55 (2.16)	100 (3.94)	126 (4.94)	2 (.08)	5.4 (.21)
300-AO_, -BO_	193*-EE_D	mm (in)	45 (1.76)	146.6 (5.77)	101.2 (3.98)	24.5 (.96)	13 9 (.55)	35 (1.38)	60 (2.36)	104 (4 09)	2 (.08)	4.5 (.17)
300-CO_	193*-EE_E	mm (in)	72 (2.83)	192 (7.57)	120.4 (4.74)	29 (1.14)	23.8 (.94)	55 (2.16)	100 (3.94)	126 (4.94)	2 (.08)	5.4 (.21)

Accessories

	For Use With	Cat. No.
DIN Rail/Panel Adapter 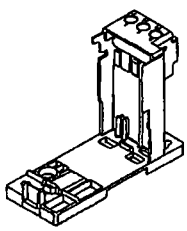	193-ED1_B, 193*-EE_B	193-EPB
	193*-EE_D	193-EPD
	193*-EE_E	193-EPE
Current Adjustment Shield	193-ED1 (all) 193*-EE (all)	193-BC8
External Reset Adapter 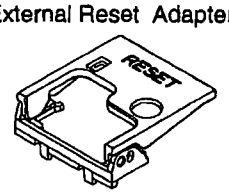	193-ED1 (all) 193*-EE (all)	193-ERA

41053-358-01 (2)
Printed in U.S.A.

Rockwell Automation

Electronic High Performance Timing Relays

(Catalog Number 700–FS)

Model No.: 700-FSA3UU23

Product Data

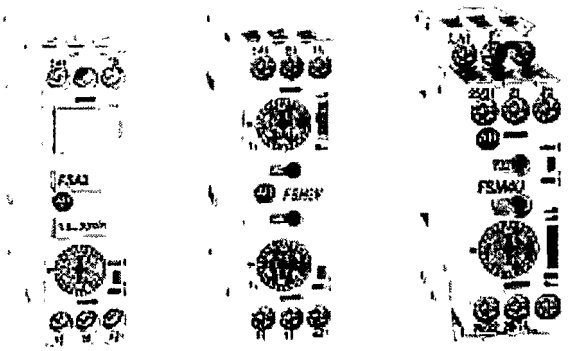

The Bulletin 700–FS Electronic High Performance Timing Relays consist of Multi–Function, Single Function and Special Function designs. These products offer the customer optimum space utilization and maximum functionality. In addition, the timing ranges are easily adjusted, and the LEDs provide visual indication of the coil and timing status.

- 22.5mm (57/64 inch) Wide
- Dual Voltage
  - 24–48V DC
    24–240V AC
- DIN Rail Mounting
- Finger Safe Terminals
- Single Pull Double Throw (SPDT) Contact Configuration
  - Multi–Function/Multi–Range (On–Delay, Off–Delay, On–and–Off–Delay, One Shot, Fleeting Off–Delay, Flasher, On–Delay Pulse Generator, Pulse Convertor, On–Function, Off–Function, with 10 Timing Ranges)
  - Single Function (On–Delay, Off– Delay, On–and–Off–Delay, One Shot, Fleeting Off–Delay, Flasher (Pulse), Flasher (Pause), On–Delay Pulse Generator, On–Delay (Pulse Controlled), One Shot/Watch Dog, Pulse Converter, with 12 Timing Ranges)
  - Special Function/Multi–Range (Flasher, True Off–Delay, Star–Delta, with 12 Timing Ranges)
- Double Pull Double Throw (DPDT) Contact Configuration
  - Multi–Function/Multi–Range (On–Delay, Off–Delay, On–and–Off–Delay, One Shot, Fleeting Off–Delay, Flasher, On–Delay Pulse Generator, Pulse Convertor, On–Function, Off–Function, with 10 Timing Ranges)
  - Single Function/Multi–Range (On–Delay, Off–Delay, with 10 Timing Ranges)

Rockwell Automation
Allen-Bradley

Catalog Number Explanation

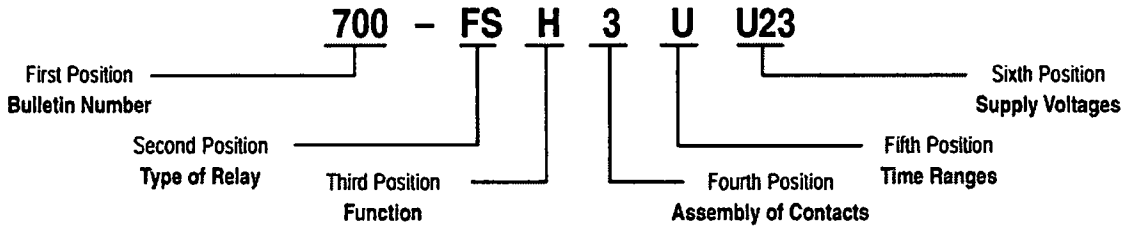

Multi–Function Timing Relays

700-FS	M	3	U	U23
	Function	**Assembly of contacts**	**Time ranges**	**Supply voltages**
	M Multi-function timing relays 8 Single-functions: A, B, C, D, E, F, I, & L. ON and OFF function additional (for installation and maintenance)	3 1 Change-over contact 1 C/O (SPDT) 4 2 Change-over contacts 2 C/O (DPDT)	U 0.05 s...60 h	Z12 12 VDC U23 24...48 VDC 24...240 V 50/60 Hz

Single Function Timing Relays

700-FS	A	3	A	U23
	Function	**Assembly of contacts**	**Time ranges**	**Supply voltages**
	A On-delay B Off-delay C On- and off-delay D One shot E Fleeting off-delay F Flasher (repeat cycle starts w/pulse) G Flasher (repeat cycle starts w/pause) I On-delay pulse generator J On-delay (pulse controlled) K One shot / watch dog (pulse controlled) L Pulse converter	3 1 Change-over contact 1 C/O (SPDT) all functions Functions A and B: 4 2 Change-over contacts 2 C/O (DPDT)	A 0.05...1 s B 0.15...3 s C 0.5...10 s D 1.5...30 s E 0.05...1 min F 0.15...3 min G 0.5...10 min H 1.5...30 min I 0.05...1 h J 0.15...3 h K 0.5...10 h L 0.3...30 h U 0.05 s...60 h	Z12 12 VDC U23 24...48 VDC 24...240 V 50/60 Hz

NOTE: Only the 700–FSA and 700–FSB are available with the "U" multi–time setting ranges (0.05s to 60h).

Special Function Timing Relays

700-FS	H	3	U	U23
	Function	**Assembly of contacts**	**Time ranges**	**Supply voltages**
	H Flasher (repeat cycle starting with pulse or pause)	3 1 Change-over contact 1 C/O (SPDT)	U 0.05 s...60 h V 0.05 s ... 60 h (2 ranges)	Z12 12 VDC U23 24...48 VDC 24...240 V 50/60 Hz

700-FS	Q	3	Q	U18
	Function	**Assembly of contacts**	**Time ranges**	**Supply voltages**
	Q Off-delay without supply voltages (true off–delay)	3 1 Change-over contact 1 C/O (SPDT) 4 2 Change-over contact 2 C/O (DPDT)	Q 0.15 s ... 10 min	U18 24...240 VDC 24...240 V 50/60 Hz

700-FS	Y	2	C	U23
	Function	**Assembly of contacts**	**Time ranges**	**Supply voltages**
	Y Star-delta timing relays	2 2 normally open contacts 2 N.O.	C 0.5...10 s D 1.5...30 s E 0.05...1 min F 0.15...3 min G 0.5...10 min	U23 24...48 VDC 24...240 V 50/60 Hz

Technical Data

700–FSM Multi–Function High Performance Timing Relays

Description	SPDT	DPDT
Multi-function timing relays 700-FSM3U includes 10 setting functions: (A) - On-delay (B) - Off-delay (C) - On- and off-delay (D) - One shot (E) - Fleeting off-delay (F) - Flasher (repeat cycle starts with pulse) (I) - On-delay pulse generator (L) - Pulse converter (On) - ON-Function * (Off) - OFF-Function * * (for installation and maintenance)	Multi-time setting range 0.05 s...60 h (1s) 0.05...1 s (3s) 0.15...3 s (10s) 0.5...10 s (1mn) 0.05...1 min (3mn) 0.15...3 min (10mn) 0.5...10 min (1h) 0.05...1 h (3h) 0.15...3 h (10h) 0.5...10 h (60h) 3...60 h	
Supply voltages (A1/A2)	Cat. No.	Cat. No.
U23 24...48 VDC; 24...240 VAC, 50/60 Hz	700-FSM3UU23	700-FSM4UU23
Z12 12 VDC	700-FSM3UZ12	700-FSM4UZ12

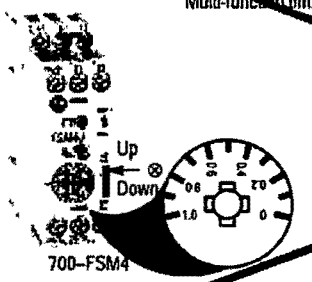

NOTE: Switch ⊗ is on DPDT relays only. When switch is down, one contact is instantaneous and one is timed. When switch is up, both contacts are timed.

700–FS Single Function High Performance Timing Relays

Description	SPDT	DPDT
22.5 mm Timing Relays Supply voltages (A1/A2) Z12 12 VDC U23 24...48 VDC 24...240 VAC, 50/60 Hz	available mono-time ranges Complete the Cat. No. with the corresponding identification ⊙ from the table on the next page. NOTE: Only the 700–FSA and 700–FSB are available with the "U" multi–time setting ranges (0.05s to 60h).	Multi-time setting ranges 0.05 s...60 h (1s) 0.05...1 s (3s) 0.15...3 s (10s) 0.5...10 s (1mn) 0.05...1 min (3mn) 0.15...3 min (10mn) 0.5...10 min (1h) 0.05...1 h (3h) 0.15...3 h (10h) 0.5...10 h (60h) 3...60 h
See 700–FS Timing Charts	Cat. No.	Cat. No.
(A) On-delay The output contact changes state after the time delay is completed.	700–FSA3CU23 700–FSA3FU23 700–FSA3UU23 700–FSA3⊙Z12 700–FSA3⊙U23	700-FSA4UU23 700-FSA4UZ12
(B) Off-delay Input power must be supplied to terminal (A1/A2) continuously. The output contact changes state when switch "S" is closed. When switch "S" is opened, the time delay begins. After the time delay is completed, the contact returns to shelf state.	700-FSB3CU23 700-FSB3FU23 700-FSB3UU23 700-FSB3⊙Z12 700-FSB3⊙U23	700-FSB4UU23 700-FSB4UZ12
(C) On- and off-delay Input power must be supplied to terminal (A1/A2) continuously. The output contact changes state when switch "S" is closed and the time delay is complete. When switch "S" is opened, the time delay begins again. After the time delay is completed, the contact returns to shelf state.	700-FSC3KU23 700-FSC3LU23 700-FSC3⊙Z12 700-FSC3⊙U23	—
(D) One shot The output contact changes state when the relay is energized. The output contact returns to shelf state when the time delay is completed.	700-FSD3KU23 700-FSD3LU23 700-FSD3⊙Z12 700-FSD3⊙U23	—
(E) Fleeting off-delay (Min. Pulse AC 50ms – DC 30ms) Input power must be supplied to terminal (A1/A2) continuously. The output contact changes state after closing and opening switch "S". After the time delay is completed, the contact returns to shelf state.	700-FSE3KU23 700-FSE3LU23 700-FSE3⊙Z12 700-FSE3⊙U23	—
(F) Flasher (Repeat Cycle Starting with Pulse) The output contact changes state when power is applied. At the end of the time delay, the output contact returns to shelf state. This cycle continues until the power is removed.	700-FSF3KU23 700-FSF3LU23 700-FSF3⊙Z12 700-FSF3⊙U23	—

Technical Data, Continued

700–FSQ Special Function Off–Delay without Supply Voltage Timing Relays

Description	SPDT	DPDT
Supply voltages (A1/A2) U18 24...240 V AC 50/60 Hz 24...240 V DC	Multi–time setting range, Q 0.15 s...10 min (2.5s) 0.15...2.5 s (80s) 4...80 s	(10s) 0.5...10 s (10min) 0.5...10 min
See 700–FS Timing Charts	Cat. No.	Cat. No.
(Q) Off-delay without supply voltage (true off–delay) When the input power is turned on, the output contact changes state. When the power is removed, the time delay begins. The output contact returns to shelf state at the end of the time delay.	700–FSQ3QU18	700–FSQ4QU18

700–FSY Special Function Star Delta Timing Relays

Description	2 NO
 Supply voltages (A1/A2) U23 24...48 VDC 24...240 VAC, 50/60 Hz	Available mono-time ranges Complete the Cat. No. with the corresponding identification ⊙ from the table below.
	Cat. No.
(Y) Star-delta timing relay When power is applied, the output contact 17/18(Y) changes state. After the time setting, the output contact 17/18(Y) returns to shelf state. After the fixed time (50 to 60 ms), the output contact 17/28Δ changes state. Both output contacts return to shelf state whenever the power is removed.	700-FSY2DU23 700-FSY2⊙U23

⊙ Mono-Time Ranges

Complete the Cat. No. with mono-time range identification. For 700–FSY relays only.

Time ranges	0.5...10 s	1.5...30 s	0.05...1 min	0.15...3 min	0.5...10 min
⊙	C	D	E	F	G

Specifications

Time characteristics (according to VDE 0435, Part 2021)

Setting accuracy	± 5% of full scale
Repeatability	± 0.2% of the setting values
Tolerance	voltage: ± 0.001%/%ΔU temperature: ± 0.025%/°C

Supply

Supply voltages	24...48 VDC and 24...240VAC, 50/60 Hz (dual voltage)
Voltage tolerance	–20% to +20% (DC), –15% to +10% (AC)
Power consumption	0.5 W at 24 VDC, 5 VA at 240 VAC
Time energized	100%
Reset time	50 ms
Voltage isolation	≤ 20 ms without reset (supply voltage)
Cable length – (supply voltage control)	max. 250 m (800 ft)

Pulse control (B1)

Pulse duration	≥ 50 ms (AC), ≥ 30 ms (DC)
Input voltage	Supply voltage range
Input current	1 mA
Cable length	max. 250 m (800 ft) without parallel load between B1 and A2 max. 50 m (160 ft) with load (< 3 kΩ) between B1 and A2

Specifications, Continued

Outputs

Contact type	Relay as changeover switch
Switching capacity	Voltage: 440 VAC Current I_{th}: 8 A Power: 2000 VA according to IEC 947-5-1: 3 A/440 VAC (inductive load, AC 14) 3 A/250 VAC (inductive load, AC 15) 1 A/24 VDC (inductive load, DC 13) according to UL 508: 1.5 A/250 VAC (B300) 3 A/120 VAC (B300)
Short-circuit protection	10 A gL (Fast Blow Fuse)
Life	mechanical: 30 Mil. of operations electrical operations: 4 Mil. at 1 A/250 VAC, cos φ = 1 0.2 Mil. at 6 A/250 VAC, cos φ = 1 1.5 Mil. at 1 A/250 VAC, cos φ = 0.3 0.3 Mil. at 3 A/250 VAC, cos φ = 0.3 0.5 Mil. at 6 A/24 VDC, resistive 2 Mil. at 4 A/24 VDC, resistive 2 Mil. at 0.2 A/230 VDC, resistive 1 Mil. at 0.4 A/24 VDC, L/R = 20 ms 1 Mil. at 0.2 A/110 VDC, L/R = 20 ms 1 Mil. at 0.1 A/230 VDC, L/R = 20 ms
State indicator	1 LED, combination signal
Setting accuracy	± 5% of full scale

General Data

Insulation characteristics	2 kVAC/50 Hz test voltage according to VDE 0435 and 6 kV 1.2/50 µs surge voltage according to IEC 947-1 between all inputs and outputs
EMC/Interference immunity	Performance of following requirements: Surge capacity of the supply voltage according to IEC 1000-4-5: 4 kV 1.2/50 µs Burst according to IEC 1000-4-4: 6 kV 6/50 ns ESD discharge according to IEC 1000-4-2: Contact 8 kV, air 8 kV Electromagnetical HF field according to IEC 801-3 and conducted electromagnetical HF signal according to IEC 801-6: Level 3
EMC/Emission	Electromagnetical fields according to EN 55 022: class B
Safe isolation	according to VDE 106, part 101
Climatic withstand	56 Cycles (24 h) at 25...40°C and 95% rel. humidity according to IEC 68-2-30 and IEC 68-2-3
Vibration resistance	4 g in 3 axis at 10...500 Hz, test FC according to IEC 68-2-6
Shock resistance	50 g according to IEC 68-2-27
Protection class	Enclosure: IP 40 IP 30 (Single-function) Terminal: IP 20 according to IEC 947-1
Weight	100 g
Approval	UL, C-UL, Germanischer Lloyd, CE Certified
Ambient temperature	Open: –25°C ... +60°C Enclosed: –25°C ... +45°C Storage: –40°C ... +85°C
Terminals	Screw terminal M3.5 for Posidrive Number.2, Philips and slotted screws Number.2. suitable for power screwdriver. Rated tightening torque 8.8 LB–IN 0.8 Nm (max. 1.2 Nm) Dual-chamber system for terminal cross-sections of 1 x 0.5 mm^2 ... 2 x 2.5 mm^2 (solid) or stranded 2 x 2.5 mm^2 (flexible with sleeve), AWG 20 to 14. Finger protection according to VDE 0106
Mounting	Front mounting; For snap-on mounting on DIN rail 35 mm or screw fixing by adapter and 2 screws M4
Disposal	Synthetic material without dioxin according to EC/EFTA notification Number. 93/0141/D – electrical contacts with cadmium

Approximate Dimensions

Dimensions are shown in millimeters (inches).
Dimensions are not intended to be used for manufacturing purposes.

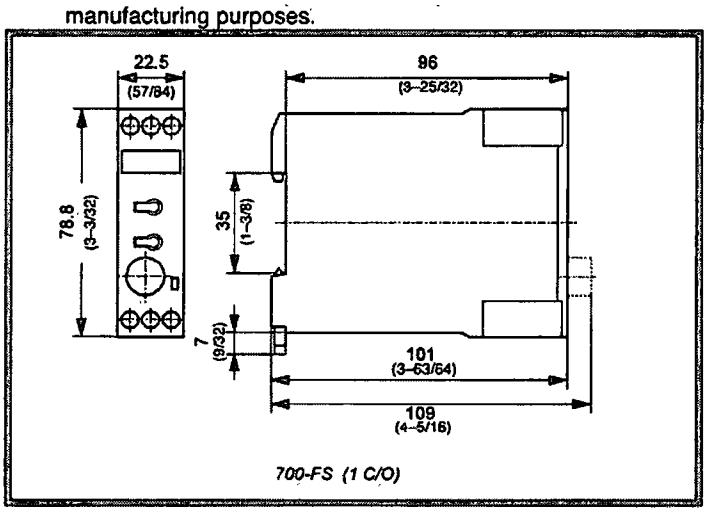

700-FS (1 C/O)

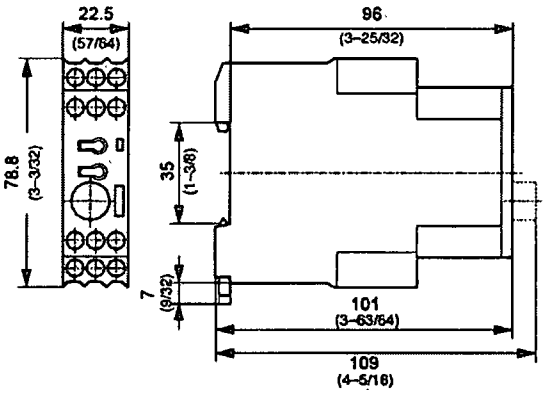

700-FS (2 C/O)

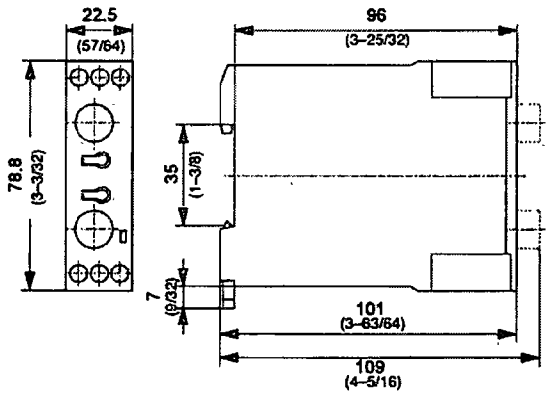

700-FSH3V...

For panel mounting, Use the 199–FSA Panel Mounting Adapter.

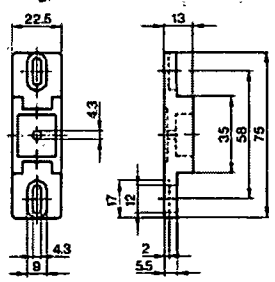

199-FSA

Timing Charts, Single Function

(A) On-delay

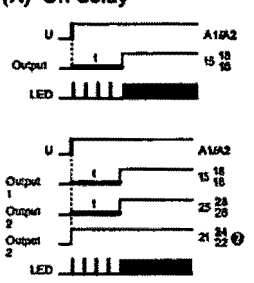

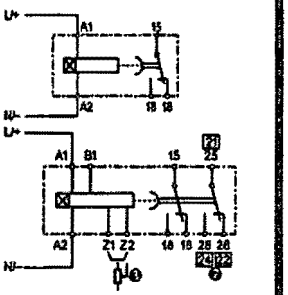

(B) Off-delay

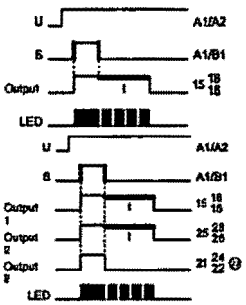

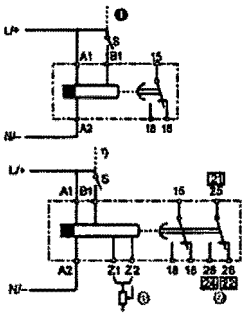

(C) On–and–Off-delay

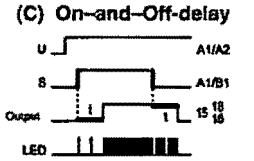

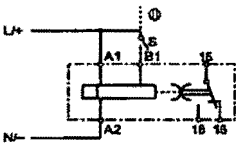

(D) One shot

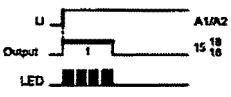

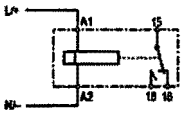

(E) Fleeting off–delay (Min. Pulse AC 50ms – DC 30ms)

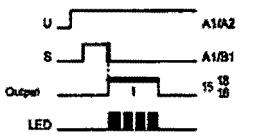

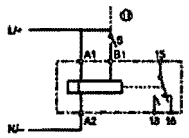

(F) Flasher (Repeat cycle starting with pulse)

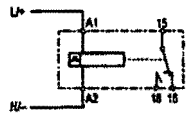

(G) Flasher (Repeat cycle starting with pause)

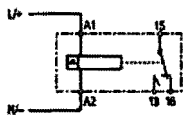

(I) On-delay pulse generator

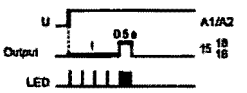

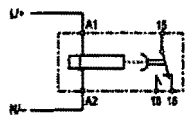

(J) On-delay (pulse controlled) (Min. Pulse AC 50ms – DC 30ms)

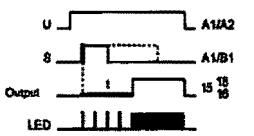

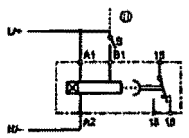

(K) One shot/watch dog (pulse controlled) (Min. Pulse AC 50ms – DC 30ms)

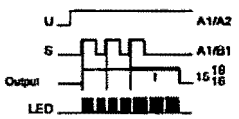

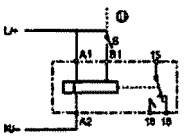

(L) Pulse converter

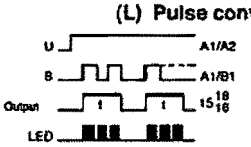

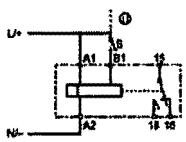

(On) ON-Function

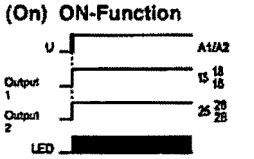

(Off) OFF-Function

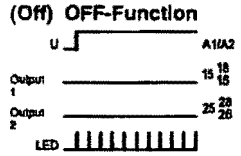

Cleverly designed function display LED (Green)

- Output in rest position, no timing
- Output in rest position, time running
- Output in operation position, no timing
- Output in operation position, time running

❶ A voltage other than the supply voltage can also be used at B1.
❷ Output 2, selectable as instantaneous contact with sliding switch (⊗) on front panel (instantaneous when switch is down, timed when switch is up).
❸ Bridge or potentiometer 10 kΩ, min. 0.25 W (low voltage) for external time setting. Set timer dial to 0.0.

Timing Charts, Special Function

(H) Flasher repeat cycle timer – Switch "X" is Up
Supply voltage connected to A1 and B1.
Oscillating Mode starting with pause.

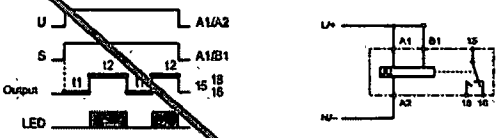

(H) Flasher repeat cycle timer – Switch "X" is Down
Supply voltage connected to A1 and B1.
Oscillating Mode starting with pulse.

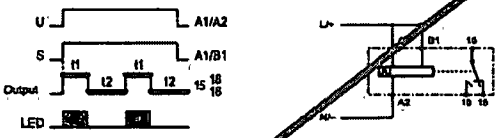

(H) Flasher repeat cycle timer – Switch "X" is Up
Pulse controlled, output starts with pause
(Min. Pulse AC 50ms – DC 30ms)
One Cycle Mode

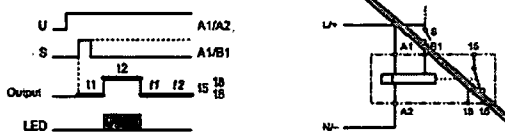

(H) Flasher repeat cycle timer – Switch "X" is Down
Pulse controlled, output starts with pulse
(Min. Pulse AC 50ms – DC 30ms)
One Cycle Mode

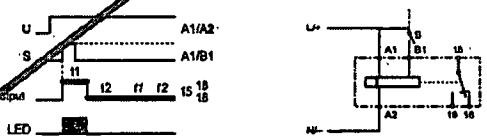

LED Operation Chart – Green LED

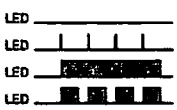

Output at Shelf State, No Timing – LED Off
Output at Shelf State, Time is Running – LED Flashing
Output NO Contact is Closed, No Timing – LED On
Output NO Contact is Closed, Time is Running – LED Long Flashing

(Q) Off–delay without supply voltage
(True Off–Delay)

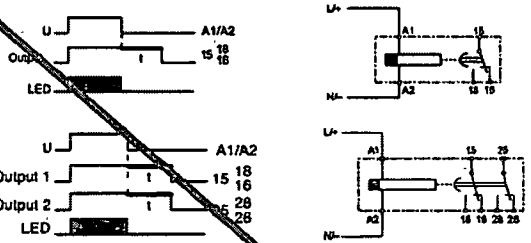

(Y) Star–Delta

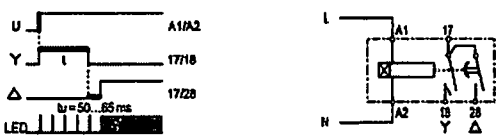

Wiring Connections
17 Common
18 Y
28 Δ

2 NO with Common

Applications

Sequence	Description	Wiring Diagram
On–Delay (A) Switch (X) Down, (Contact 21–24/22) is Instantaneous 700–FSM DPDT Only Delayed Motor Starting	Pushing the Start Button energizes A1. After the time delay, Motor 1M will start	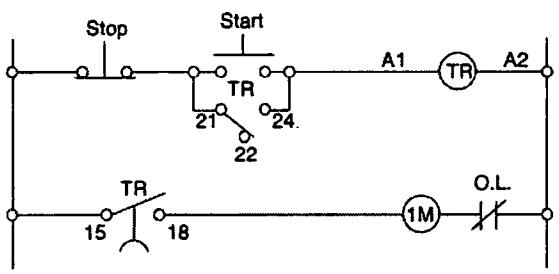

Section 5 – System Drawings

- Water Treatment Air Stripper Process & Instrumentation Diagram

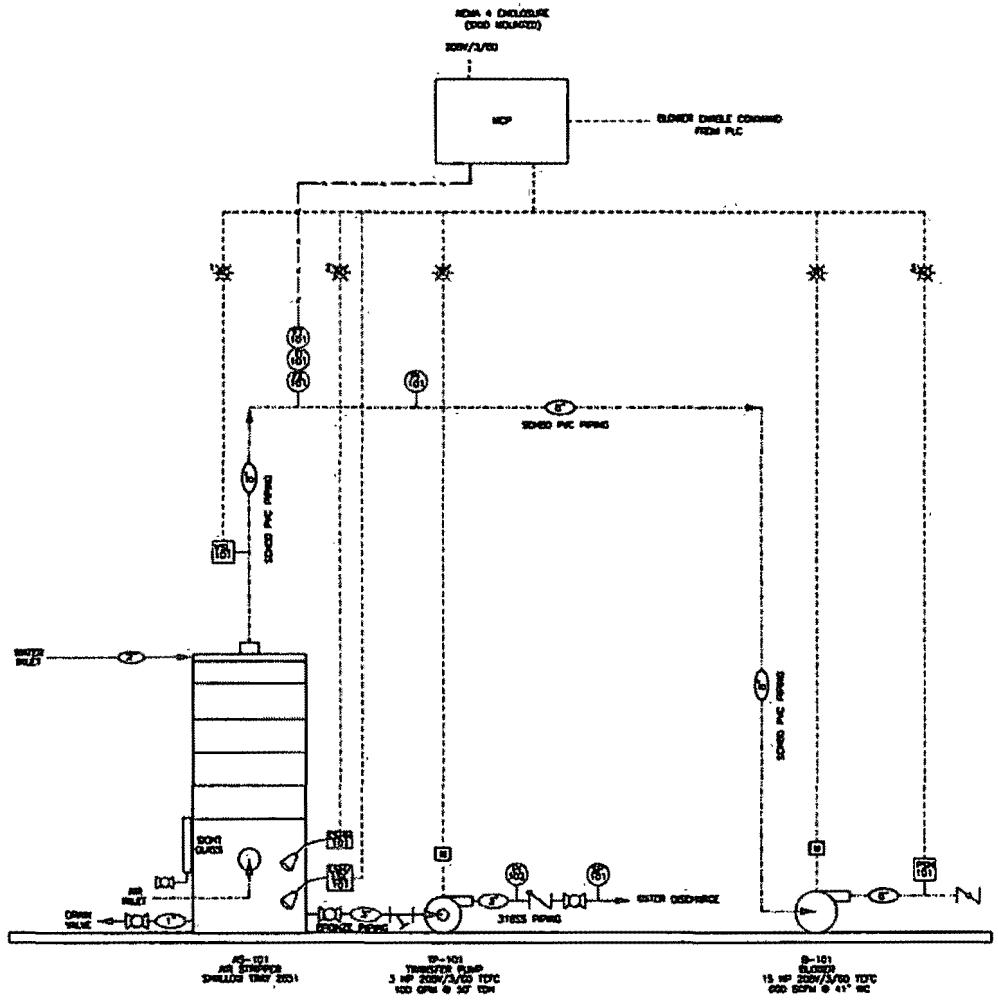

LEGEND

FE	FLOW ELEMENT
FI	FLOW INDICATOR
FT	FLOW TRANSMITTER
LSH	LEVEL SWITCH HIGH
LSHH	LEVEL SWITCH HIGH HIGH
LSL	LEVEL SWITCH LOW
M	MOTOR
MCP	MASTER CONTROL PANEL
PI	PRESSURE INDICATOR
PSH	PRESSURE SWITCH HIGH
SP	SAMPLE PORT
VSL	VACUUM SWITCH LOW
	BUTTERFLY VALVE
	BALL VALVE
	CHECK VALVE
	Y/Y STRAINER
	ALARM LIGHT
	RUN LIGHT
	AIR LINE
	CONTROL LINE
	ANALOG LINE
	WATER LINE

ALARMS

1. AIR STRIPPER BLOWER LOW VACUUM
2. AIR STRIPPER SUMP HIGH HIGH LEVEL
3. AIR STRIPPER BLOWER DISCHARGE HIGH PRESSURE

INTERLOCK SCHEDULE	
DESIGNATION	FUNCTION
LSH-101	TP-101 ON
LSL-101	TP-101 OFF
VSL-101	B-101 OFF
LSHH-101	B-101 DELAY OFF
PSH-101	B-101 DELAY OFF
NOTES	B-101 DELAYS 30 MINUTES BEFORE SHUTDOWN UNLESS VSL-101
	B-101 WAITS FOR REMOTE ENABLE SIGNAL IN AUTO
	VSL-101 HAS A 10 SECOND DELAY ON B-101 STARTUP

REV.	DESCRIPTION	DATE	APPR.
1	ADDED INTERLOCK SCHEDULE	8/13/07	JMD
REVISIONS			

CONFIDENTIALITY NOTE:
The information contained in this drawing is intended for use only by BISCO Environmental and SCI. The information is confidential and any copying, distribution or dissemination without the consent of BISCO Environmental is STRICTLY PROHIBITED.

DRWN BY	DRF
DATE	7/24/07
CHK BY	JMD
DATE	7/27/07
APPR BY	
DATE	

BISCO Environmental
Soil & Groundwater Remediation Equipment
Taunton, Massachusetts 02780

TITLE: WATER TREATMENT AIR STRIPPER PROCESS & INSTRUMENTATION DIAGRAM

SCI	OMEGA – CA
JOB NO.	123655
SCALE	N/A
SIZE	C
DWG NO.	12365GCP
SHEET	1 OF 1
REV	1

Section 6 – Warranty

- Limitation of Warranty & Limitation of Remedy

BISCO Environmental

NEEP Systems

Soil and Groundwater Remediation Equipment

Limitation of Warranty

&

Limitation of Remedy

All products not manufactured by BISCO Environmental carry the original manufacturer's warranty. Copies are available upon request.

BISCO Environmental warrants its packaged and manufactured equipment against any defect in material or workmanship, under normal use and storage, for a period of twelve (12) months from date of manufacture. In the event that products are found to be defective within the warranty period, BISCO Environmental's sole obligation and remedy shall be the furnishing of replacements for any defective parts, and such replacement shall be furnished but not installed by BISCO Environmental. BISCO Environmental will not be liable for special or consequential damages in any claim, suit or proceedings arising under this warranty, nor will BISCO Environmental accept any liability for claims for labor, loss of profit, repairs or other expenses incidental to replacement. The product warranty expressed above is our only warranty and may not be verbally changed or modified by any representative of BISCO Environmental. All freight costs incurred in shipping parts to or from BISCO Environmental or to the manufacturer if necessary, are at the expense of the customer.

BISCO Environmental expressly disclaims any warranties, expressed or implied, including any warranty of merchantability or fitness for a particular purpose or any warranty arising from a course of dealing or usage of trade. Except to the extent required by applicable law, BISCO Environmental shall not be liable, in tort, contract or otherwise, for any loss or damage, whether direct, consequential or incidental, of any person or entity arising in connection with the equipment.

135 ROBERT TREAT PAINE DRIVE * TAUNTON, MASSACHUSETTS 02780 * TEL: (508) 738-5100 * FAX: (508) 738-5022

5

Section Five

South Gate Engineering

TRANSMITTAL

June 12, 2007

Re:
P.O.#SEI-6190
SGE#9516

SLABY ENVIRONMENTAL INC.

ATTN: Robert Slaby

We are transmitting the following for approval:

1 set(s) Submittal Drawings
Bill of Materials
ASME Code Calcs

The enclosed submittal package is for the tank ordered on the above referenced purchase order. Please review these drawings and advise if changes are needed. If these drawings are satisfactory and construction can begin, please initial and return this page via fax. Please note that delivery of your equipment is contingent upon the return of an approval. Delay in approving may compel us to reschedule your equipment for later production dates than specified in our contract due to conflict with other contractual commitments. Please avoid delays by returning approvals promptly. If you have any questions, please feel free to call at any time.

Thank You,
Mallory Goad
Project Manager
South Gate Engineering, LLC.

Accepted_____
Date_____

13477 YORBA AVE. CHINO, CA 91710 PHONE: 909.628.2779 FAX: 909.628.6779

WORK ORDER NO.
9516-1A

DETAIL DWG.	NOZZLE SCHEDULE						
	ITEM	DESCRIPTION	FIT-UP DWG	SIZE	MATERIAL	QTY.	HEAT #'S
1 OF 3	A,B	INLET/OUTLET	1 OF 3				
	*	FLANGE		6"-150# RFSO	SA-105	4	
	*	PIPE		6" SCH.40 x 11 3/8"	SA-106,B	2	
	M	12"x16" MANWAY	2 OF 3	3/4" THK. x 4" WIDE	SA-106,C	1	
	F	HALF COUPLING	2 OF 3	3"-3000#	SA-105	1	
	G	HALF COUPLING	2 OF 3	1"-3000#	SA-105	1	
	H	FULL COUPLING	2 OF 3	2"-3000#	SA-105	1	
	I	HALF COUPLING	2 OF 3	2"-3000#	SA-105	1	
1 OF 3	E	SAFETY RELIEF	2 OF 3				
	*	FLANGE		3"-150# RFSO	SA-105	1	
	*	PIPE		3" SCH.40 x 6 3/4"	SA-106,B	1	
	K	HALF COUPLING	1 OF 3	1/2"-3000#	SA-105	3	

DETAIL DWG.	EXTERNAL ATTACHMENT						
	ITEM	DESCRIPTION	FIT-UP DWG	SIZE	MATERIAL	QTY.	HEAT #'S
2 OF 3	LG	PIPE LEGS	1 OF 3				
	*	PIPE		6"-SCH.40 x45"	SA-106,B	4	
	*	CAP PLATE		1/4" THK.	SA-36	4	
	*	BASEPLATE		1/2"x10"x12"	SA-36	4	
	SG	NAMEPLATE BRACKET	1 OF 3	STD	SA-414,G	1	
	LL	LIFTLUGS	1 OF 3	TYPE "E" (1/4" THK)	SA-36	2	

DETAIL DWG.	SKID						
	ITEM	DESCRIPTION	FIT-UP DWG	SIZE	MATERIAL	QTY.	HEAT #'S
3 OF 3	*	SKID	3 OF 3				
	S1	WIDE FLANGE SECTION		W8x31# x146"	A-992,GR50	2	
	S2	WIDE FLANGE SECTION		W8x24# x62 7/16"	A-992,GR50	4	
	*	BOLTS		1"-8 UN x 2 1/2" LG	SA-193,B7	4	
	*	HEX NUT		1"-8 UN	SA-194,2H	4	

SOUTH GATE ENGINEERING
13477 YORBA AVENUE
CHINO, CALIFORNIA
91710
PH.(909)628-2779
FAX.(909)628-6779

REV	DATE	DESCRIPTION	APPV'D
4			
3			
2			
1			
0	06/06	SUBMITTAL	

WORK ORDER NO.
9516-1A
SHEET 1 OF 3

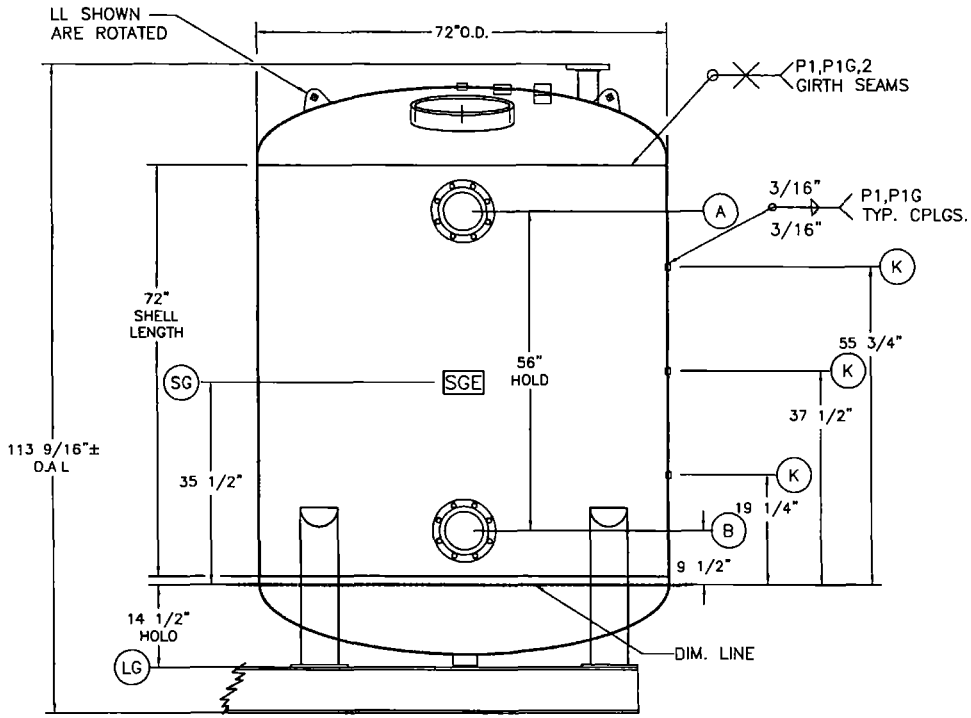

ELEVATION VIEW

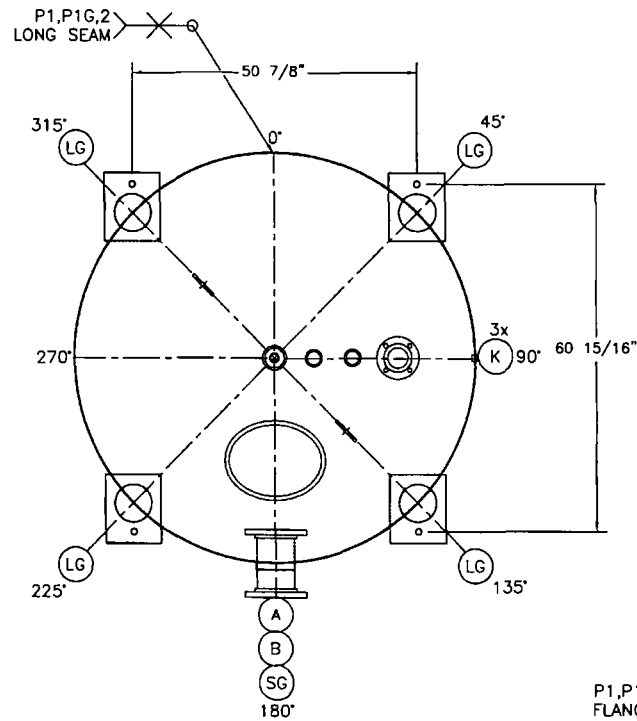

TOP VIEW

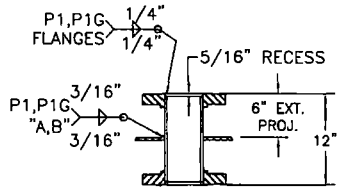

NOZZLE "A,B"

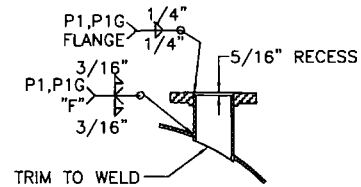

NOZZLE "E"

NOTES:

3 SP6, 3-5 MDFT TNEMEC # 140
FINISH WITH 2-3 MDFT TNEMEC #1074 (COLOR: TBD)
2. FLANGE BOLT HOLES TO STRADDLE CENTERLINES INSIDE/OUT.
1. DEBURR ALL SHARP EDGES.

CONSTRUCTION PER
A.S.M.E. SECTION VIII, DIVISION 1

SOUTH GATE ENGINEERING
13477 YORBA AVENUE
CHINO, CALIFORNIA
91710
PH.(909)628-2779
FAX.(909)628-6779

REV	DATE	DESCRIPTION	APP'D
4			
3			
2			
1			
0	06/06	SUBMITTAL	

CUSTOMER NAME: SLABY ENVIRONMENTAL, INC.		SHELL: 3/16" x 72" x 225 5/8" SA-516 GR 70
PROJECT NAME: P.O. # SEI-6190 / VAPOR FILTER VESSEL # A		HEADS: 72" O D.100%CR-6%KR 3/16" SA-516 GR 70
SERIAL NO.: 19648	NATIONAL BOARD NO.: N/A	MODEL NO: VFT72-72E
RELEASE DATE:	DRAWN BY: JASON HASSOUN	APPVD BY:
DESIGN/M A.W.P. 10/10 PSI	WORKING TEMP. (Max./Min.) 180/-20 F°	RADIOGRAPHY: NONE
TEST PRESSURE 13 PSI	VOLUME: 1,596 GAL.	WEIGHT: 1,713 LBS
		CORROSION ALLOWANCE: NONE

WORK ORDER NO.
9516-1A
SHEET 2 OF 3

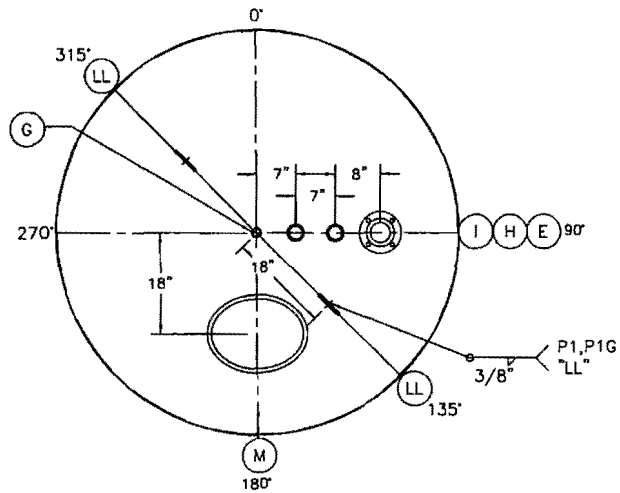

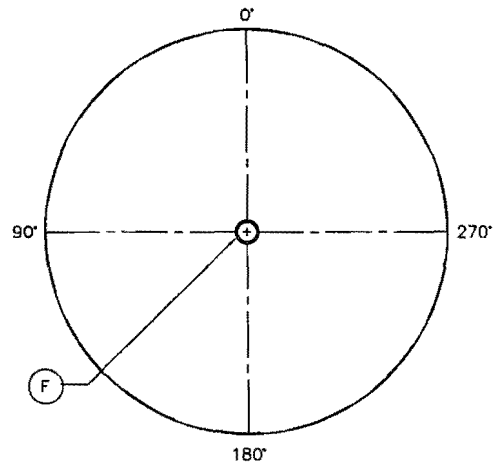

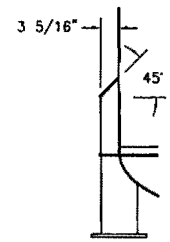

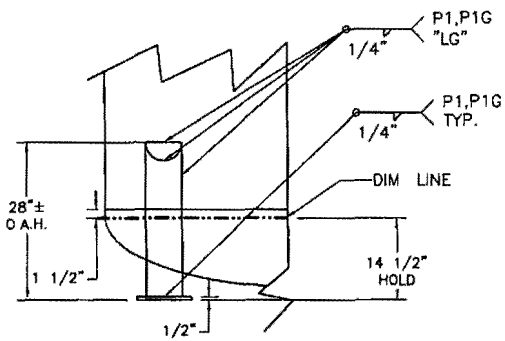

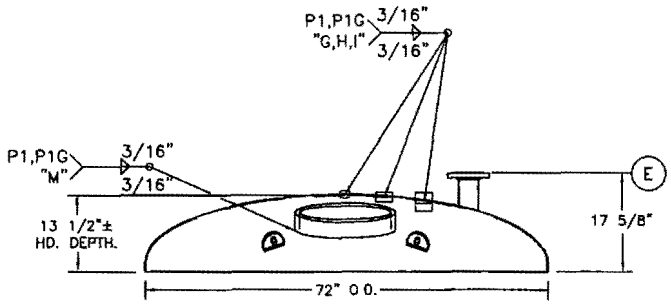

TOP HEAD LAYOUT

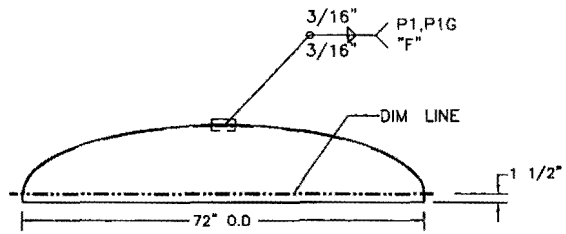

BOTTOM HEAD LAYOUT

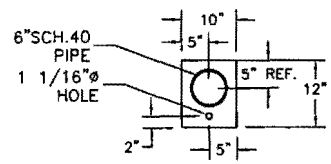

DETAIL "LEG"

3. PUNCH MARK @0°,90°,180°,270°.
2. FLANGE BOLT HOLES TO STRADDLE CENTERLINES
1. DEBURR ALL SHARP EDGES.

NOTES:

CONSTRUCTION PER
A.S.M.E. SECTION VIII, DIVISION 1

REV	DATE	DESCRIPTION	APPV'D
4			
3			
2			
1			
0	06/06	SUBMITTAL	

SOUTH GATE ENGINEERING
13477 YORBA AVENUE
CHINO, CALIFORNIA
91710
PH.(909)628-2779
FAX.(909)628-6779

WORK ORDER NO.
9516-1A
SHEET 3 OF 3

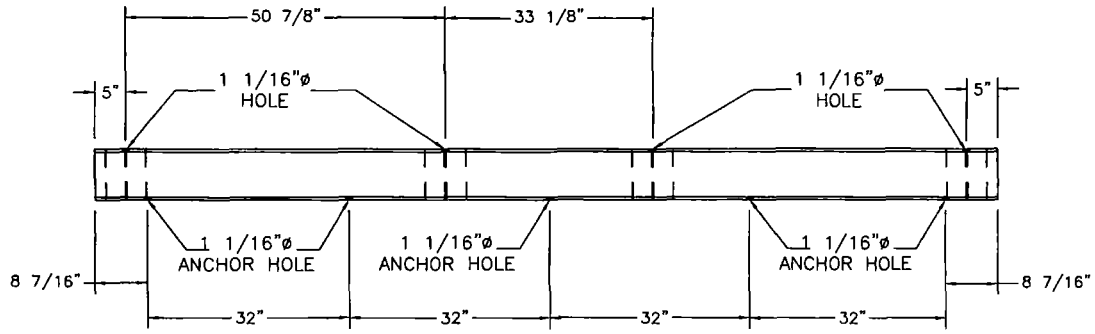

"S1" SECTION
W8X31#

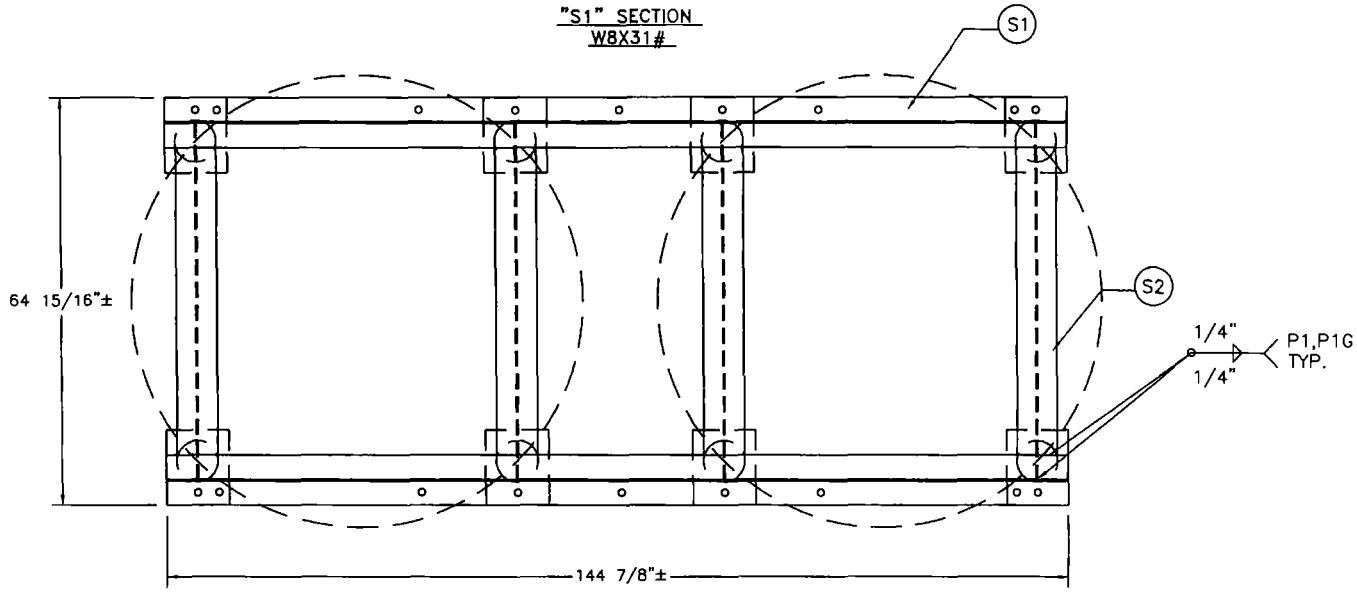

TOP VIEW

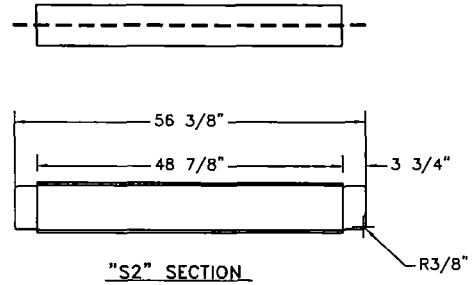

"S2" SECTION
W8X24#

2 WEIGHT OF SKID 1,378 LB
1 DEBURR ALL SHARP EDGES.

NOTES:

SOUTH GATE ENGINEERING
13477 YORBA AVENUE
CHINO, CALIFORNIA
91710
PH.(909)628-2779
FAX.(909)628-6779

CONSTRUCTION PER
A.S.M.E. SECTION VIII, DIVISION 1

REV	DATE	DESCRIPTION	APPV'D
4			
3			
2			
1			
0	06/06	SUBMITTAL	

WORK ORDER NO.
9516-1B

DETAIL DWG.	NOZZLE SCHEDULE						
	ITEM	DESCRIPTION	FIT-UP DWG	SIZE	MATERIAL	QTY.	HEAT #'S
1 OF 2	A,B	INLET/OUTLET	1 OF 2				
	*	FLANGE		6"-150# RFSO	SA-105	4	
	*	PIPE		6" SCH.40 x 11 3/8"	SA-106,B	2	
	M	12"x16" MANWAY	2 OF 2	3/4" THK. x 4" WIDE	SA-106,C	1	
	F	HALF COUPLING	2 OF 2	3"-3000#	SA-105	1	
	G	HALF COUPLING	2 OF 2	1"-3000#	SA-105	1	
	H	FULL COUPLING	2 OF 2	2"-3000#	SA-105	1	
	I	HALF COUPLING	2 OF 2	2"-3000#	SA-105	1	
1 OF 2	E	SAFETY RELIEF	2 OF 2				
	*	FLANGE		3"-150# RFSO	SA-105	1	
	*	PIPE		3" SCH.40 x 6 3/4"	SA-106,B	1	
	K	HALF COUPLING	1 OF 2	1/2"-3000#	SA-105	3	

DETAIL DWG.	EXTERNAL ATTACHMENT						
	ITEM	DESCRIPTION	FIT-UP DWG	SIZE	MATERIAL	QTY.	HEAT #'S
2 OF 2	LG	PIPE LEGS	1 OF 2				
	*	PIPE		6"-SCH.40 x45"	SA-106,B	4	
	*	CAP PLATE		1/4" THK.	SA-36	4	
	*	BASEPLATE		1/2"x10"x12"	SA-36	4	
	SG	NAMEPLATE BRACKET	1 OF 2	STD	SA-414,G	1	
	LL	LIFTLUGS	1 OF 2	TYPE "E" (1/4" THK)	SA-36	2	

DETAIL DWG.	SKID						
	ITEM	DESCRIPTION	FIT-UP DWG	SIZE	MATERIAL	QTY.	HEAT #'S
	*	BOLTS		1"-8 UN x 2 1/2" LG	SA-193,B7	4	
	*	HEX NUT		1"-8 UN	SA-194,2H	4	

SOUTH GATE ENGINEERING
13477 YORBA AVENUE
CHINO, CALIFORNIA
91710
PH.(909)628-2779
FAX.(909)628-6779

REV	DATE	DESCRIPTION	APPV'D
4			
3			
2			
1			
0	06/06	SUBMITTAL	

WORK ORDER NO.
9516-1B
SHEET 1 OF 2

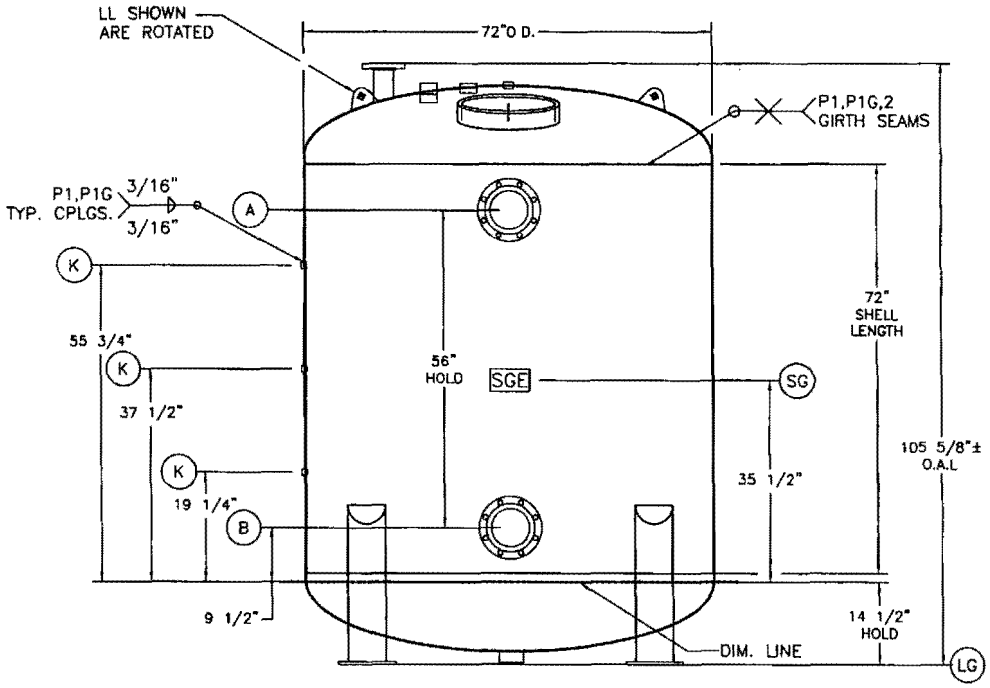

ELEVATION VIEW

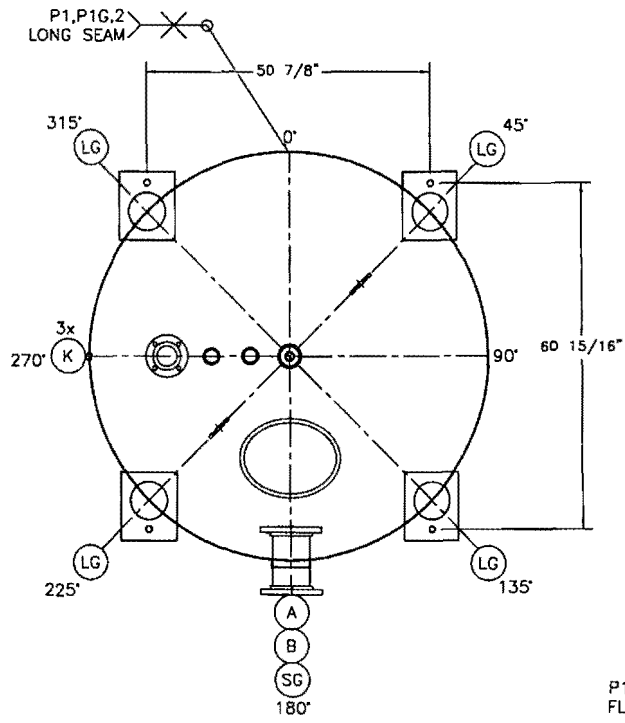

TOP VIEW

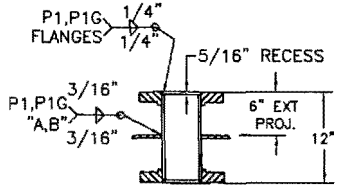

NOZZLE "A,B"

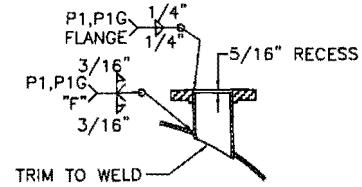

NOZZLE "E"

3 SP6, 3-5 MDFT TNEMEC # 140
FINISH WITH 2-3 MDFT TNEMEC #1074 (COLOR TBD)
2. FLANGE BOLT HOLES TO STRADDLE CENTERLINES INSIDE/OUT
1. DEBURR ALL SHARP EDGES.

NOTES:

CONSTRUCTION PER
A.S.M.E. SECTION VIII, DIVISION 1

SOUTH GATE ENGINEERING
13477 YORBA AVENUE
CHINO, CALIFORNIA
91710
PH.(909)628-2779
FAX.(909)628-6779

REV	DATE	DESCRIPTION	APP'D
4			
3			
2			
1			
0	06/06	SUBMITTAL	

CUSTOMER NAME: SLABY ENVIRONMENTAL, INC		
PROJECT NAME: P.O. # SEI-6190 / VAPOR FILTER VESSEL # B		
SERIAL NO.: 19649	NATIONAL BOARD NO.: N/A	MODEL NO: VFT72-72E
RELEASE DATE.	DRAWN BY: JASON HASSOUN	APPVD BY:
DESIGN/M.A.W.P. 10/10 PSI	WORKING TEMP. (Max./Min.) 180/-20 F°	
TEST PRESSURE: 13 PSI	VOLUME. 1,596 GAL.	WEIGHT: 1,713 LBS

SHELL: 3/16" x 72" x 225 5/8" SA-516 GR 70	
HEADS: 72" O 0.100%CR-6%KR 3/16" SA-516 GR 70	
INTERIOR LINING: SP5, 10-12 MDFT OF PLASITE 7156	
EXTERIOR COATING: SEE NOTE 3	
RADIOGRAPHY: NONE	
CORROSION ALLOWANCE: NONE	

WORK ORDER NO.
9516-1B
SHEET 2 OF 2

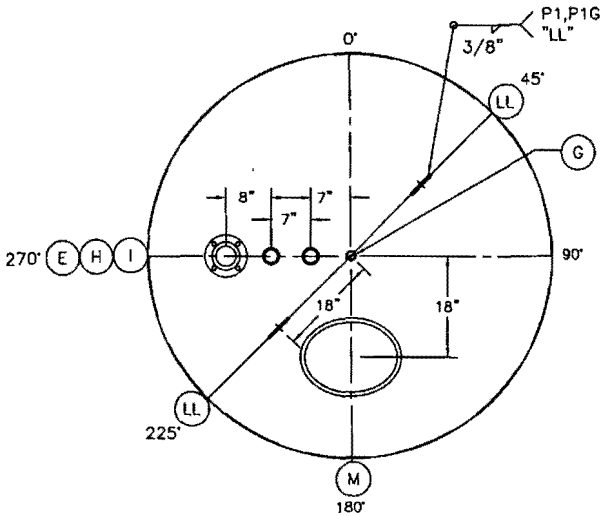

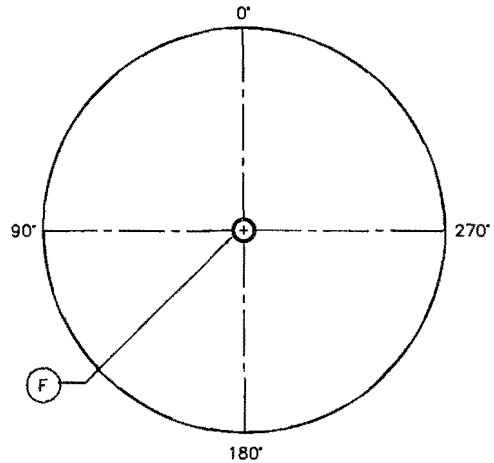

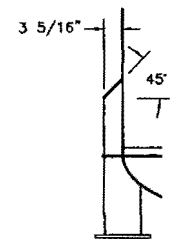

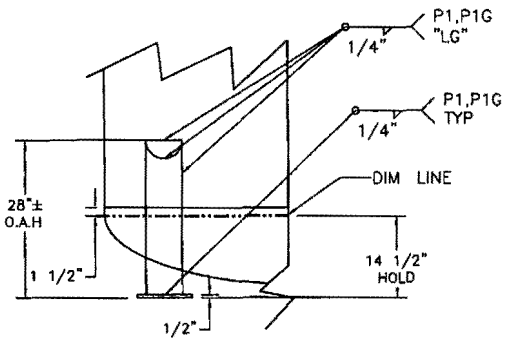

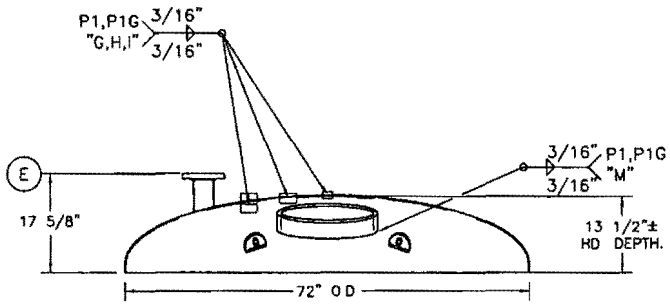

TOP HEAD LAYOUT

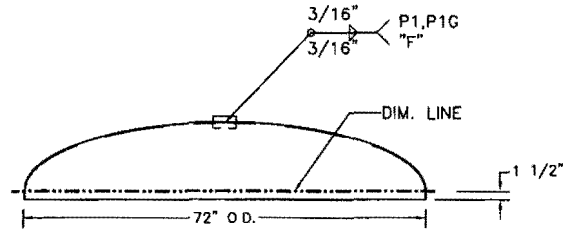

BOTTOM HEAD LAYOUT

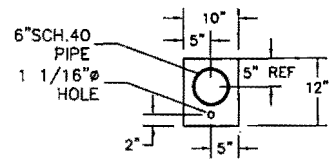

DETAIL "LEG"

3. PUNCH MARK @0°,90°,180°,270°.
2. FLANGE BOLT HOLES TO STRADDLE CENTERLINES
1. DEBURR ALL SHARP EDGES

NOTES:

CONSTRUCTION PER
A.S.M.E. SECTION VIII, DIVISION 1

REV	DATE	DESCRIPTION	APPV'D
4			
3			
2			
1			
0	06/06	SUBMITTAL	

SOUTH GATE ENGINEERING
13477 YORBA AVENUE
CHINO, CALIFORNIA
91710
PH.(909)628-2779
FAX.(909)628-6779

South Gate Engineering LLC
13477 Yorba Ave. Chino, CA 91710

Date Printed: 6/11/2007

CUSTOMER

SLABY ENVIRONMENTAL, INC.
P.O. BOX 903
BORREGO SPRINGS, CA 92004

VESSEL LOCATION

UNKNOWN

Vessel designed per the ASME Boiler & Pressure Vessel Code,
Section VIII, Division 1,2004 Edition, 2006 Addenda
with Advanced Pressure Vessel, Version: 9.2.3
Vessel is ASME Code Stamped

NOT

Job No: 9516-1
Vessel Number: VFT72-72E
Purchase Order Number: SEI-6190

NAMEPLATE INFORMATION

Vessel MAWP:	10.00 PSI at 180 °F
MDMT:	-20 °F at 10.00 PSI
Serial Number(s):	19648-19649
National Board Number(s):	NO STAMP
Year Built:	2007
Radiography:	NONE
Postweld Heat Treated:	NONE
Construction Type:	W

Signatures

ENGINEERING MANAGER: _____ Date: 6/11/07

South Gate Engineering LLC
72" O.D. 72" LG. SHELL

Customer: **SLABY ENVIRONMENTAL, INC.**
Job No: 9516-1
Number: 1

Vessel Number: VFT72-72E
Mark Number: S1

Date Printed: 6/11/2007

Cylindrical Shell Design Information

Design Pressure:	10.00	PSI	Design Temperature:	180	°F
Static Head:	3.20	PSI	Long. Joint Efficiency:	70	%
Shell Material:	SA-516 Gr 70		Factor B Chart:	CS-2	
			Material Stress (hot):	20000	PSI
Shell Length:	72.0000	in.	Material Stress (cold):	20000	PSI
			Compressive Stress:	9440	PSI
Corrosion Allowance:	0.0000	in.	Actual Circumferential Stress:	3613	PSI
External Corrosion Allowance:	0.0000	in.	Actual Longitudinal Stress:	1797	PSI
Outside Diameter (new):	72.0000	in.	Extreme Fiber Elongation:	0.26	%
Outside Diameter (corroded):	72.0000	in.	Specific Gravity:	1.00	
Shell Surface Area:	113.10	Sq. Ft.	Weight of Fluid:	10492.69	lb.
Shell Estimated Volume:	1256.00	Gal.	Total Flooded Shell Weight:	11354.62	lb.
Circ. Joint Efficiency:	70	%	Shell Weight:	861.93	lb.

Minimum Design Metal Temperature Data

Min. Temperature Curve:	B	Pressure at MDMT:	10.00 PSI
UCS-66(b) reduction:	Yes	Minimum Design Metal Temperature:	-20 °F
UCS-68(c) reduction:	No	Computed Minimum Temperature:	-155 °F

Design Thickness Calculations

Longitudinal Stress Calculations per Paragraph UG-27(c)(2)

$$t = \frac{PR}{2SE + 0.4P} = \frac{13.20 * 35.8125}{2 * 20000 * 0.70 + 0.4 * 13.20}$$

= Greater Of ($0.0169_{(Calculated)}$, $0.0625_{(Minimum\ Allowed)}$) + 0.0000 (corrosion) + 0.0000 (ext. corrosion) = minimum of **0.0625** in.

Circumferential Stress Calculations per Appendix 1-1(a)(1)

$$t = \frac{PR_o}{SE + 0.4P} = \frac{13.20 * 36.0000}{20000 * 0.70 + 0.4 * 13.20}$$

= Greater of ($0.0340_{(Calculated)}$, $0.0625_{(Minimum\ Allowed)}$) + 0.0000 (corrosion) + 0.0000 (ext. corrosion) = minimum of **0.0625** in.

External loads do not control design.

Nominal Shell Thickness Selected = **0.1875** in.

South Gate Engineering LLC
100:6 72" O.D TOP HEAD

Customer: **SLABY ENVIRONMENTAL, INC.**
Job No: 9516-1
Number: 1

Vessel Number: VFT72-72E
Mark Number: H1

Date Printed: 8/11/2007

ASME F&D Head Design Information

Design Pressure:	10.00	PSI	Design Temperature:	180	°F
Static Head:	0.50	PSI	Joint Efficiency:	85	%
Head Material:	SA-516 Gr 70		Factor B Chart:	CS-2	
			Material Stress (hot):	20000	PSI
Corrosion Allowance:	0.0000	in.	Material Stress (cold):	20000	PSI
External Corrosion Allowance:	0.0000	in.	Actual Head Stress:	4654	PSI
Head Location:	Top		Straight Flange :	1.5000	in.
Outside Diameter :	72.0000	in.	Knuckle (r) :	4.3200	in.
Thin Out :	0.0188	in.			
Crown Radius (Lo) :	72.0000	in.	$M = \frac{1}{4}[3 + \sqrt{L/r}]$:	1.7693	
Extreme Fiber Elongation:	3.19	%			
Head Surface Area:	35.23	Sq. Ft.	Specific Gravity:	1.00	
Head Estimated Volume:	167.09	Gal.	Weight of Fluid:	1393.55	lb.
Head Weight:	269.16	lb.	Total Flooded Head Weight:	1662.71	lb.

Minimum Design Metal Temperature Data

Min. Temperature Curve:	B	Pressure at MDMT:	10.00 PSI
UCS-66(b) reduction:	No	Minimum Design Metal Temperature:	-20 °F
UCS-68(c) reduction:	No	Computed Minimum Temperature:	-20 °F

Design Thickness Calculations

Design Thickness Calculations per Appendix 1-4(d)

$$t = \frac{PL_oM}{2SE + P(M - 0.2)} = \frac{10.50 * 72.0000 * 1.7693}{2 * 20000 * 0.85 + 10.50 (1.7693 - 0.2)}$$

= Greater of (0.0394(Calc.), 0.0625(Min. t)) + $0.0000_{(corrosion)}$ + $0.0000_{(ext.\ corrosion)}$ + $0.0188_{(thin\ out)}$ = minimum of **0.0813** in.

Nominal Head Thickness Selected = **0.1875** in.
Minimum Thickness after forming, t_s (uncorroded) = **0.1687** in.

South Gate Engineering LLC
72" O.D BOTTOM HEAD

Customer: **SLABY ENVIRONMENTAL, INC.**
Job No: 9516-1
Number: 2

Vessel Number: VFT72-72E
Mark Number: H2

Date Printed: 6/11/2007

ASME F&D Head Design Information

Design Pressure:	10.00	PSI	Design Temperature:	180	°F
Static Head:	3.80	PSI	Joint Efficiency:	85	%
Head Material:	SA-516 Gr 70		Factor B Chart:	CS-2	
			Material Stress (hot):	20000	PSI
Corrosion Allowance:	0.0000	in.	Material Stress (cold):	20000	PSI
External Corrosion Allowance:	0.0000	in.	Actual Head Stress:	6117	PSI
Head Location:	Bottom		Straight Flange :	1.5000	in.
Outside Diameter :	72.0000	in.	Knuckle (r) :	4.3200	in.
Thin Out :	0.0188	in.			
Crown Radius (Lo) :	72.0000	in.	$M = \frac{1}{4}[3 + \sqrt{L/r}]$:	1.7693	
Extreme Fiber Elongation:	3.19	%			
Head Surface Area:	35.23	Sq. Ft.	Specific Gravity:	1.00	
Head Estimated Volume:	167.09	Gal.	Weight of Fluid:	1393.55	lb.
Head Weight:	269.16	lb.	Total Flooded Head Weight:	1662.71	lb.

Minimum Design Metal Temperature Data

Min. Temperature Curve:	B	Pressure at MDMT:	10.00 PSI
UCS-66(b) reduction:	No	Minimum Design Metal Temperature:	-20 °F
UCS-68(c) reduction:	No	Computed Minimum Temperature:	-20 °F

Design Thickness Calculations

Design Thickness Calculations per Appendix 1-4(d)

$$t = \frac{PL_oM}{2SE + P(M - 0.2)} = \frac{13.80 * 72.0000 * 1.7693}{2 * 20000 * 0.85 + 13.80\ (1.7693 - 0.2)}$$

= Greater of (0.0517(Calc.), 0.0625(Min. t)) + $0.0000_{(corrosion)}$ + $0.0000_{(ext.\ corrosion)}$ + $0.0188_{(thin\ out)}$ = minimum of **0.0813** in.

Nominal Head Thickness Selected = **0.1875** in.
Minimum Thickness after forming, t_s (uncorroded) = **0.1687** in.

South Gate Engineering LLC

MANWAY

Customer: **SLABY ENVIRONMENTAL, INC.**
Job No: 9516-1
Number: 1
ID Number: 1

Vessel Number: VFT72-72E
Mark Number: M

Date Printed: 6/11/2007

Nozzle Design Information

Design Pressure:	10.00 PSI		Design Temperature:	180	°F
Static Head:	0.30 PSI		Nozzle Efficiency (E):	100	%
Nozzle Material:	SA-106 Gr C		Joint Efficiency (E_1):	1.00	
			Factor B Chart:	CS-2	
External Projection:	3.0000 in.		Allowable Stress at Design Temperature (S_n):	20000	PSI
Internal Projection:	0.8750 in.		Allowable Stress at Ambient Temperature:	20000	PSI
Inside Corrosion Allowance:	0.0000 in.		Correction Factor (F):	1.00	
External Corrosion Allowance:	0.0000 in.		Passes through a Category A Joint:	No	
Nozzle ID (new):	16.5000 in.		Nozzle Wall Thickness(new):	0.7500	in.
Nozzle ID (corroded):	16.5000 in.		Nozzle Wall Thickness(corroded):	0.7500	in.
Outer "h" Limit:	0.4218 in.		Upper Weld Leg Size(Weld 41):	0.1875	in.
Internal "h" Limit:	0.4218 in.		Internal Weld Leg Size(Weld 43):	0.1875	in.
OD, Limit of Reinforcement:	33.0000 in.				

Minimum Design Metal Temperature

Min. Temp. Curve:	B	Pressure at MDMT:	10.00 PSI
UCS-66(b) reduction:	Yes	Minimum Design Metal Temperature:	-20 °F
UCS-68(c) reduction:	No	Computed Minimum Temperature:	-125 °F

Host Component: Head 1 - 100:6 72" O.D TOP HEAD

Material:	SA-516 Gr 70	Head wall thickness(new):	0.1875 in.
Material Stress(S_v):	20000 PSI	Head wall thickness - thin out (corroded):	0.1687 in.

Nozzle Detail Information

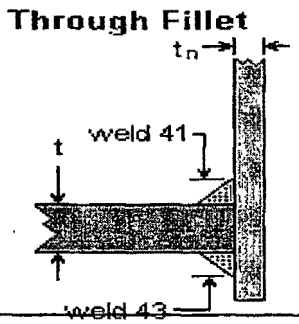

Upper Weld Leg Size(Weld 41): 0.1875 in.

Internal Weld Leg Size(Weld 43): 0.1875 in.

Nozzle Wall Thickness(t_n): 0.7500 in.

Nozzle passes through the vessel, attached by a fillet weld.
Nozzle is adequate for UG-45 requirements.
Opening is adequately reinforced for Internal Pressure.
Weld Strength Paths are adequate.

Required Head Thickness per Paragraph UG-37(a)

$$tr = \frac{PLoM}{(2SE + P * (M - 0.2))} = \frac{10.30 * 72.0000 * 1.0000}{(2 * 20000 * 1 + 10.30 * (1.0000 - 0.2))}$$ = **0.0185** in.

Nozzle Required Thickness Calculations

Required Nozzle Thickness for Internal Pressure per Paragraph UG-37(a)

$$trn = \frac{PRn}{SE - 0.6P} = \frac{10.30 * 8.2500}{20000 * 1 - 0.6 * 10.30}$$ = **0.0043** in.

Strength Reduction Factors

$$fr1 = \frac{Sn}{Sv} = \frac{20000}{20000} = 1.0000$$ $$fr2 = \frac{Sn}{Sv} = \frac{20000}{20000} = 1.0000$$ $$fr3 = \frac{Sn}{Sv} = \frac{20000}{20000} = 1.0000$$

UG-45 Thickness Calculations

This calculation is for an access or inspection opening.

Nozzle Thickness for Pressure Loading (plus corrosion) per Paragraph UG-45(a)

$$t = \frac{PRn}{SE - 0.6P} + Ca + ext.\ Ca = \frac{10.30 * 8.2500}{20000 * 1.00 - 0.6 * 10.30} + 0.0000 + 0.0000$$ = **0.0043** in.

Nozzle Reinforcement Calculations

Area Required for Internal Pressure

A = d tr F + 2 tn tr F (1 - fr1) = (16.5000 * 0.0185 * 1.00) + (2 * 0.7500 * 0.0185 * 1.00 * (1 - 1.0000)) = **0.3053** sq. in.

Area Available - Internal Pressure

A1 Formula 1 = d(E1 t - F tr) - 2tn(E1 t - F tr)(1 - fr1) =
16.5000 * (1.00 * 0.1687 - 1.00 * 0.0185) - 2 * 0.7500 * (1.00 * 0.1687 - 1.00 * 0.0185) * (1 - 1.0000) = *2.4783* sq. in.

A1 Formula 2 = 2(t + tn)(E1 t - F tr) - 2tn(E1 t - F tr)(1 - fr1) =
2 * (0.1687 + 0.7500)(1.00 * 0.1687 - 1.00 * 0.0185) - 2 * 0.7500 * (1.00 * 0.1687 - 1.00 * 0.0185) * (1 - 1.0000)

= *0.2760* sq. in.

A1 = Larger value of *A1 Formula 1* and *A1 Formula 2* = **2.4783** sq. in.

A2 Formula 1 = 5(tn - trn) fr2 t = 5(0.7500 - 0.0043) * 1.0000 * 0.1687 = *0.6290* sq. in.
A2 Formula 2 = 5(tn - trn) fr2 tn = 5(0.7500 - 0.0043) * 1.0000 * 0.7500 = *2.7964* sq. in.
A2 = Smaller value of *A2 Formula 1* and *A2 Formula 2* = **0.6290** sq. in.

A3 = Smaller value of the following :
5 * t * t_i * f_{r2} = 5 * 0.1687 * 0.7500 * 1.0000 = 0.6326 sq. in.
5 * t_i * t_i * f_{r2} = 5 * 0.7500 * 0.7500 * 1.0000 = 2.8125 sq. in.
2 * h * t_i * f_{r2} = 2 * 0.8750 * 0.7500 * 1.0000= 1.3125 sq. in.
= **0.6326** sq. in.

A41 = $(leg)^2$ * fr2 = $(0.1875)^2$ * 1.0000 = **0.0352** sq. in.

A43 = $(leg)^2$ * fr2 = $(0.1875)^2$ * 1.0000 = **0.0352** sq. in.

Area Available (Internal Pressure) = A1 + A2 + A3 + A41 + A43 = 3.8103 sq. in., which is **greater** than A (0.3053)

Nozzle Weld Strength Calculations

Attachment Weld Strength per Paragraph UW-16

Weld 41 tmin = smaller of 0.75, t, or tn = smaller of 0.75, 0.1687, or 0.7500 = **0.1687** in.

Weld 41 Leg min. = $\frac{\text{(smaller of 0.25 or (tmin * 0.7)) + ext. CA}}{0.7} = \frac{0.1181}{0.7}$ = **0.1687** in.

Weld 41, actual weld leg = **0.1875** in.

Weld 43 tmin = smaller of 0.75, t, or tn = smaller of 0.75, 0.1687, or 0.7500 = **0.1687** in.

Weld 43 Leg min. = $\frac{\text{(smaller of 0.25 or (tmin * 0.7)) + ca}}{0.7} = \frac{\text{(smaller of 0.25 or (0.1687 * 0.7)) + 0.0000}}{0.7} = \frac{0.1181}{0.7}$ = **0.1687** in.

Weld 43, actual weld leg = **0.1875** in.

Unit Stresses per Paragraphs UG-45(c) and UW-15

Nozzle wall in shear = 0.70 * Sn = 0.70 * 20000 = **14000** PSI
Upper fillet, Weld 41, in shear = 0.49 * Material Stress = 0.49 * 20000 = **9800** PSI
Inner fillet, Weld 43, in shear = 0.49 * Material Stress = 0.49 * 20000 = **9800** PSI

Strength of Connection Elements

Nozzle wall in shear = ½ * π * mean nozzle diameter * tn * Nozzle wall in shear unit stress =
½ * π * 17.2500 * 0.7500 * 14000 = **284400**
Upper fillet in shear = ½ * π * Nozzle OD * weld leg * upper fillet in shear unit stress = ½ * π * 18.0000 * 0.1875 * 9800 = **51900** lb.
Inner fillet in shear = ½ * π * Nozzle OD * weld leg * inner fillet in shear unit stress = ½ * π * 18.0000 * 0.1875 * 9800 = **51900** lb.

Load to be carried by welds, per UG-41(b)(1) and Fig. UG-41.1 sketch (a)

W = [A - A1 + 2 tn fr1(E1t - Ftr)] Sv = [0.3053 - 2.4783 + 2 * 0.7500 * 1.0000 * (1.00 * 0.1687 - 1.0000 * 0.0185)] * 20000 = **-38954** lb.
W1-1 = (A2 + A5 + A41 + A42) * Sv = (0.6290 + 0.0000 + 0.0352 + 0.0000) * 20000 = **13300** lb.
W2-2 = (A2 + A3 + A41 + A43 + 2 tn t fr1) Sv = (0.6290 + 0.6326 + 0.0352 + 0.0352 + 2 * 0.7500 * 0.1687 * 1.0000) * 20000 = **31700** lb.
W3-3 = (A2 + A3 + A5 + A41 + A42 + A43 + 2 tn t fr1) * Sv =
(0.6290 + 0.6326 + 0.0000 + 0.0352 + 0.0000 + 0.0352 + 2 * 0.7500 * 0.1687 * 1.0000) * 20000 = **31700** lb.

Check Strength Paths

Path 1-1 = Upper fillet in shear + Nozzle wall in shear = 51900 + 284400 = **336300** lb.
Path 2-2 = Upper fillet in shear + Inner fillet in shear =
51900 + 51900 = **103800** lb.
Path 3-3 = Upper fillet in shear + Inner fillet in shear = 51900 + 51900 = **103800** lb.

South Gate Engineering LLC

6" 150# NOZZLE A

Customer: **SLABY ENVIRONMENTAL, INC.**
Job No: 9516-1
Number: 2
ID Number: A

Vessel Number: VFT72-72E
Mark Number: A

Date Printed: 6/11/2007

Nozzle Design Information

Design Pressure:	10.00	PSI	Design Temperature:	180	°F
Static Head:	1.33	PSI	Nozzle Efficiency (E):	100	%
Nozzle Material:	SA-106 Gr B		Joint Efficiency (E_1):	1.00	
			Factor B Chart:	CS-2	
External Projection:	6.0000	in.	Allowable Stress at Design Temperature (S_n):	17100	PSI
Internal Projection:	6.0000	in.	Allowable Stress at Ambient Temperature:	17100	PSI
Inside Corrosion Allowance:	0.0000	in.	Correction Factor (F):	1.00	
External Corrosion Allowance:	0.0000	in.	Passes through a Category A Joint:	No	
Nozzle Pipe Size:	6		Nozzle Pipe Schedule:	40	
Nozzle ID (new):	6.0650	in.	Nozzle Wall Thickness(new):	0.2800	in.
Nozzle ID (corroded):	6.0650	in.	Nozzle Wall Thickness(corroded):	0.2800	in.
Outer "h" Limit:	0.4688	in.	Upper Weld Leg Size(Weld 41):	0.1875	in.
Internal "h" Limit:	0.4688	in.	Internal Weld Leg Size(Weld 43):	0.1875	in.
OD, Limit of Reinforcement:	12.1300	in.			

Minimum Design Metal Temperature

Min. Temp. Curve:	B	Pressure at MDMT:	10.00 PSI
UCS-66(b) reduction:	Yes	Minimum Design Metal Temperature:	-20 °F
UCS-68(c) reduction:	No	Computed Minimum Temperature:	-155 °F

Host Component: Shell 1 - 72" O.D. 72" LG. SHELL

Material:	SA-516 Gr 70	Shell wall thickness(new):	0.1875 in.
Material Stress(S_V):	20000 PSI	Shell wall thickness(corroded):	0.1875 in.

Nozzle Detail Information

Through Fillet

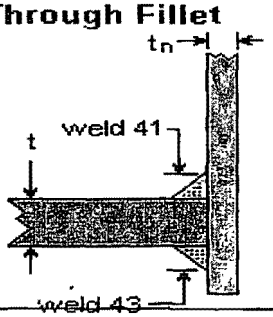

Upper Weld Leg Size(Weld 41): 0.1875 in.

Internal Weld Leg Size(Weld 43): 0.1875 in.

Nozzle Wall Thickness(t_n): 0.2800 in.

Nozzle passes through the vessel, attached by a fillet weld.
Pipe Size: 6 Schedule: 40
Nozzle is adequate for UG-45 requirements.
Opening is adequately reinforced for Internal Pressure.
Weld Strength Paths are adequate.

Required Shell Thickness per Paragraph UG-37(a)

$$tr = \frac{PRo}{SE + 0.4P} = \frac{11.33 * 36.0000}{20000 * 1 + 0.4 * 11.33}$$ = **0.0204** in.

Nozzle Required Thickness Calculations

Required Nozzle Thickness for Internal Pressure per Paragraph UG-37(a)

$$trn = \frac{PRn}{SE - 0.6P} = \frac{11.33 * 3.0325}{17100 * 1 - 0.6 * 11.33}$$ = **0.0020** in.

Strength Reduction Factors

$$fr1 = \frac{Sn}{Sv} = \frac{17100}{20000} = 0.8550 \qquad fr2 = \frac{Sn}{Sv} = \frac{17100}{20000} = 0.8550 \qquad fr3 = \frac{Sn}{Sv} = \frac{17100}{20000} = 0.8550$$

UG-45 Thickness Calculations

Nozzle Thickness for Pressure Loading (plus corrosion) per Paragraph UG-45(a)

$$t = \frac{PRn}{SE - 0.6P} + Ca + ext.\ Ca = \frac{11.33 * 3.0325}{17100 * 1.00 - 0.6 * 11.33} + 0.0000 + 0.0000$$ = **0.0020** in.

Nozzle Thickness for Internal Pressure (plus corrosion) per Paragraph UG-45(b)(1)

$$t = \frac{PRo}{SE + 0.4P} + Ca + ext.\ Ca = \frac{11.33 * 36.0000}{20000 * 1 + 0.4 * 11.33} + 0.0000 + 0.0000$$

= Greater Of ($0.0204_{(Calculated)}$, $0.0625_{(Minimum\ Allowed)}$) + 0.0000 (corrosion) + 0.0000 (ext. corrosion) = **0.0625** in.

Minimum Thickness of Standard Wall Pipe (plus corrosion) per Paragraph UG-45(b)(4)

t = minimum thickness of standard wall pipe + Ca + ext. Ca = **0.2450** in.

Nozzle Minimum Thickness per Paragraph UG-45(b)

t = Smallest of UG-45(b)(1) or UG-45(b)(4) = **0.0625** in.

Wall thickness = tn * 0.875(pipe) = **0.2450** is greater than or equal to UG-45 value of **0.0625**

Nozzle Reinforcement Calculations

Area Required for Internal Pressure

A = d tr F + 2 tn tr F (1 - fr1) = (6.0650 * 0.0204 * 1.00) + (2 * 0.2800 * 0.0204 * 1.00 * (1 - 0.8550)) = **0.1254** sq. in.

Area Available - Internal Pressure

A1 Formula 1 = d(E1 t - F tr) - 2tn(E1 t - F tr)(1 - fr1) =
6.0650 * (1.00 * 0.1875 - 1.00 * 0.0204) - 2 * 0.2800 * (1.00 * 0.1875 - 1.00 * 0.0204) * (1 - 0.8550) = *0.9999* sq. in.

A1 Formula 2 = 2(t + tn)(E1 t - F tr) - 2tn(E1 t - F tr)(1 - fr1) =
2 * (0.1875 + 0.2800)(1.00 * 0.1875 - 1.00 * 0.0204) - 2 * 0.2800 * (1.00 * 0.1875 - 1.00 * 0.0204) * (1 - 0.8550)
= *0.1427* sq. in.

A1 = Larger value of *A1 Formula 1* and *A1 Formula 2* = **0.9999** sq. in.

A2 Formula 1 = 5(tn - trn) fr2 t = 5(0.2800 - 0.0020) * 0.8550 * 0.1875 = *0.2228* sq. in.
A2 Formula 2 = 5(tn - trn) fr2 tn = 5(0.2800 - 0.0020) * 0.8550 * 0.2800 = *0.3328* sq. in.
A2 = Smaller value of *A2 Formula 1* and *A2 Formula 2* = **0.2228** sq. in.

A3 = Smaller value of the following :
5 * t * t_i * f_{r2} = 5 * 0.1875 * 0.2800 * 0.8550 = 0.2244 sq. in.
5 * t_i * t_i * f_{r2} = 5 * 0.2800 * 0.2800 * 0.8550 = 0.3352 sq. in.
2 * h * t_i * f_{r2} = 2 * 6.0000 * 0.2800 * 0.8550= 2.8728 sq. in.
= **0.2244** sq. in.

A41 = (leg)² * fr2 = (0.1875)² * 0.8550 = **0.0301** sq. in.

A43 = (leg)² * fr2 = (0.1875)² * 0.8550 = **0.0301** sq. in.

Area Available (Internal Pressure) = A1 + A2 + A3 + A41 + A43 = 1.5073 sq. in., which is **greater** than A (0.1254)

Nozzle Weld Strength Calculations

Attachment Weld Strength per Paragraph UW-16

Weld 41 tmin = smaller of 0.75, t, or tn = smaller of 0.75, 0.1875, or 0.2800 = **0.1875** in.

Weld 41 Leg min. = $\frac{\text{(smaller of 0.25 or (tmin * 0.7)) + ext. CA}}{0.7} = \frac{0.1313}{0.7}$ = **0.1875** in.

Weld 41, actual weld leg = **0.1875** in.

Weld 43 tmin = smaller of 0.75, t, or tn = smaller of 0.75, 0.1875, or 0.2800 = **0.1875** in.

Weld 43 Leg min. = $\frac{\text{(smaller of 0.25 or (tmin * 0.7)) + ca}}{0.7} = \frac{\text{(smaller of 0.25 or (0.1875 * 0.7)) + 0.0000}}{0.7} = \frac{0.1313}{0.7}$ = **0.1875** in.

Weld 43, actual weld leg = **0.1875** in.

Unit Stresses per Paragraphs UG-45(c) and UW-15

Nozzle wall in shear = 0.70 * Sn = 0.70 * 17100 = **11970** PSI
Upper fillet, Weld 41, in shear = 0.49 * Material Stress = 0.49 * 17100 = **8379** PSI
Inner fillet, Weld 43, in shear = 0.49 * Material Stress = 0.49 * 17100 = **8379** PSI

Strength of Connection Elements

Nozzle wall in shear = ½ * π * mean nozzle diameter * tn * Nozzle wall in shear unit stress =
½ * π * 6.3450 * 0.2800 * 11970 = **33400** lb.
Upper fillet in shear = ½ * π * Nozzle OD * weld leg * upper fillet in shear unit stress = ½ * π * 6.6250 * 0.1875 * 8379 = **16300** lb.
Inner fillet in shear = ½ * π * Nozzle OD * weld leg * inner fillet in shear unit stress = ½ * π * 6.6250 * 0.1875 * 8379 = **16300** lb.

Load to be carried by welds, per UG-41(b)(1) and Fig. UG-41.1 sketch (a)

W = [A - A1 + 2 tn fr1(E1t - Ftr)] Sv = [0.1254 - 0.9999 + 2 * 0.2800 * 0.8550 * (1.00 * 0.1875 - 1.0000 * 0.0204)] * 20000 = **-15889** lb.
W1-1 = (A2 + A5 + A41 + A42) * Sv = (0.2228 + 0.0000 + 0.0301 + 0.0000) * 20000 = **5060** lb.
W2-2 = (A2 + A3 + A41 + A43 + 2 tn t fr1) Sv = (0.2228 + 0.2244 + 0.0301 + 0.0301 + 2 * 0.2800 * 0.1875 * 0.8550) * 20000 = **11900** lb.
W3-3 = (A2 + A3 + A5 + A41 + A42 + A43 + 2 tn t fr1) * Sv =
(0.2228 + 0.2244 + 0.0000 + 0.0301 + 0.0000 + 0.0301 + 2 * 0.2800 * 0.1875 * 0.8550) * 20000 = **11900** lb.

Check Strength Paths

Path 1-1 = Upper fillet in shear + Nozzle wall in shear = 16300 + 33400 = **49700** lb.
Path 2-2 = Upper fillet in shear + Inner fillet in shear =
16300 + 16300 = **32600** lb.
Path 3-3 = Upper fillet in shear + Inner fillet in shear = 16300 + 16300 = **32600** lb.

South Gate Engineering LLC

6" NOZZLE B

Customer: **SLABY ENVIRONMENTAL, INC.**
Job No: 9516-1
Number: 3
ID Number: B

Vessel Number: VFT72-72E
Mark Number: B

Date Printed: 6/11/2007

Nozzle Design Information

Design Pressure:	10.00	PSI	Design Temperature:	180	°F
Static Head:	3.10	PSI	Nozzle Efficiency (E):	100	%
Nozzle Material:	SA-106 Gr B		Joint Efficiency (E_1):	1.00	
			Factor B Chart:	CS-2	
External Projection:	6.0000	in.	Allowable Stress at Design Temperature (S_n):	17100	PSI
Internal Projection:	6.0000	in.	Allowable Stress at Ambient Temperature:	17100	PSI
Inside Corrosion Allowance:	0.0000	in.	Correction Factor (F):	1.00	
External Corrosion Allowance:	0.0000	in.	Passes through a Category A Joint:	No	
Nozzle Pipe Size:	6		Nozzle Pipe Schedule:	40	
Nozzle ID (new):	6.0650	in.	Nozzle Wall Thickness(new):	0.2800	in.
Nozzle ID (corroded):	6.0650	in.	Nozzle Wall Thickness(corroded):	0.2800	in.
Outer "h" Limit:	0.4688	in.	Upper Weld Leg Size(Weld 41):	0.1875	in.
Internal "h" Limit:	0.4688	in.	Internal Weld Leg Size(Weld 43):	0.1875	in.
OD, Limit of Reinforcement:	12.1300	in.			

Minimum Design Metal Temperature

Min. Temp. Curve:	B	Pressure at MDMT:	10.00 PSI
UCS-66(b) reduction:	Yes	Minimum Design Metal Temperature:	-20 °F
UCS-68(c) reduction:	No	Computed Minimum Temperature:	-155 °F

Host Component: Shell 1 - 72" O.D. 72" LG. SHELL

Material:	SA-516 Gr 70	Shell wall thickness(new):	0.1875 in.
Material Stress(S_V):	20000 PSI	Shell wall thickness(corroded):	0.1875 in.

Nozzle Detail Information

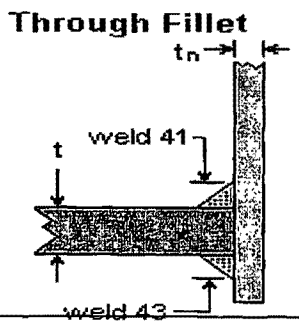

Upper Weld Leg Size(Weld 41): 0.1875 in.

Internal Weld Leg Size(Weld 43): 0.1875 in.

Nozzle Wall Thickness(t_n): 0.2800 in.

Nozzle passes through the vessel, attached by a fillet weld.
Pipe Size: 6 Schedule: 40
Nozzle is adequate for UG-45 requirements.
Opening is adequately reinforced for Internal Pressure.
Weld Strength Paths are adequate.

South Gate Engineering LLC
6" NOZZLE B

Job No: 9516-1
Number: 3
ID Number: B

Vessel Number: VFT72-72E
Mark Number: B

Date Printed: 6/11/2007

Required Shell Thickness per Paragraph UG-37(a)

$$tr = \frac{PRo}{SE + 0.4P} = \frac{13.10 * 36.0000}{20000 * 1 + 0.4 * 13.10}$$ = **0.0236** in.

Nozzle Required Thickness Calculations

Required Nozzle Thickness for Internal Pressure per Paragraph UG-37(a)

$$trn = \frac{PRn}{SE - 0.6P} = \frac{13.10 * 3.0325}{17100 * 1 - 0.6 * 13.10}$$ = **0.0023** in.

Strength Reduction Factors

$$fr1 = \frac{Sn}{Sv} = \frac{17100}{20000} = 0.8550 \qquad fr2 = \frac{Sn}{Sv} = \frac{17100}{20000} = 0.8550 \qquad fr3 = \frac{Sn}{Sv} = \frac{17100}{20000} = 0.8550$$

UG-45 Thickness Calculations

Nozzle Thickness for Pressure Loading (plus corrosion) per Paragraph UG-45(a)

$$t = \frac{PRn}{SE - 0.6P} + Ca + ext.\ Ca = \frac{13.10 * 3.0325}{17100 * 1.00 - 0.6 * 13.10} + 0.0000 + 0.0000$$ = **0.0023** in.

Nozzle Thickness for Internal Pressure (plus corrosion) per Paragraph UG-45(b)(1)

$$t = \frac{PRo}{SE + 0.4P} + Ca + ext.\ Ca = \frac{13.10 * 36.0000}{20000 * 1 + 0.4 * 13.10} + 0.0000 + 0.0000$$

= Greater Of ($0.0236_{(Calculated)}$, $0.0625_{(Minimum\ Allowed)}$) + 0.0000 (corrosion) + 0.0000 (ext. corrosion) = **0.0625** in.

Minimum Thickness of Standard Wall Pipe (plus corrosion) per Paragraph UG-45(b)(4)

t = minimum thickness of standard wall pipe + Ca + ext. Ca = **0.2450** in.

Nozzle Minimum Thickness per Paragraph UG-45(b)

t = Smallest of UG-45(b)(1) or UG-45(b)(4) = **0.0625** in.

Wall thickness = tn * 0.875(pipe) = **0.2450** is greater than or equal to UG-45 value of **0.0625**

Nozzle Reinforcement Calculations

Area Required for Internal Pressure

A = d tr F + 2 tn tr F (1 - **fr1**) = (6.0650 * 0.0236 * 1.00) + (2 * 0.2800 * 0.0236 * 1.00 * (1 - 0.8550)) = **0.1451** sq. in.

Area Available - Internal Pressure

A1 Formula 1 = d(E1 t - F tr) - 2tn(E1 t - F tr)(1 - fr1) =
6.0650 * (1.00 * 0.1875 - 1.00 * 0.0236) - 2 * 0.2800 * (1.00 * 0.1875 - 1.00 * 0.0236) * (1 - 0.8550) = *0.9807* sq. in.

A1 Formula 2 = 2(t + tn)(E1 t - F tr) - 2tn(E1 t - F tr)(1 - fr1) =
2 * (0.1875 + 0.2800)(1.00 * 0.1875 - 1.00 * 0.0236) - 2 * 0.2800 * (1.00 * 0.1875 - 1.00 * 0.0236) * (1 - 0.8550)
= *0.1399* sq. in.

A1 = Larger value of *A1 Formula 1* and *A1 Formula 2* = **0.9807** sq. in.

A2 Formula 1 = 5(tn - trn) fr2 t = 5(0.2800 - 0.0023) * 0.8550 * 0.1875 = *0.2226* sq. in.
A2 Formula 2 = 5(tn - trn) fr2 tn = 5(0.2800 - 0.0023) * 0.8550 * 0.2800 = *0.3324* sq. in.
A2 = Smaller value of *A2 Formula 1* and *A2 Formula 2* = **0.2226** sq. in.

A3 = Smaller value of the following :
5 * t * t_i * f_{r2} = 5 * 0.1875 * 0.2800 * 0.8550 = 0.2244 sq. in.
5 * t_i * t_i * f_{r2} = 5 * 0.2800 * 0.2800 * 0.8550 = 0.3352 sq. in.
2 * h * t_i * f_{r2} = 2 * 6.0000 * 0.2800 * 0.8550= 2.8728 sq. in.
= **0.2244** sq. in.

A41 = (leg)² * fr2 = (0.1875)² * 0.8550 = **0.0301** sq. in.

A43 = (leg)² * fr2 = (0.1875)² * 0.8550 = **0.0301** sq. in.

Area Available (Internal Pressure) = A1 + A2 + A3 + A41 + A43 = 1.4879 sq. in., which is **greater** than A (0.1451)

Nozzle Weld Strength Calculations

Attachment Weld Strength per Paragraph UW-16

Weld 41 tmin = smaller of 0.75, t, or tn = smaller of 0.75, 0.1875, or 0.2800 = **0.1875** in.

Weld 41 Leg min. = $\frac{\text{(smaller of 0.25 or (tmin * 0.7)) + ext. CA}}{0.7} = \frac{0.1313}{0.7}$ = **0.1875** in.

Weld 41, actual weld leg = **0.1875** in.

Weld 43 tmin = smaller of 0.75, t, or tn = smaller of 0.75, 0.1875, or 0.2800 = **0.1875** in.

Weld 43 Leg min. = $\frac{\text{(smaller of 0.25 or (tmin * 0.7)) + ca}}{0.7} = \frac{\text{(smaller of 0.25 or (0.1875 * 0.7)) + 0.0000}}{0.7} = \frac{0.1313}{0.7}$ = **0.1875** in.

Weld 43, actual weld leg = **0.1875** in.

Unit Stresses per Paragraphs UG-45(c) and UW-15

Nozzle wall in shear = 0.70 * Sn = 0.70 * 17100 = **11970** PSI

Upper fillet, Weld 41, in shear = 0.49 * Material Stress = 0.49 * 17100 = **8379** PSI

Inner fillet, Weld 43, in shear = 0.49 * Material Stress = 0.49 * 17100 = **8379** PSI

Strength of Connection Elements

Nozzle wall in shear = ½ * π * mean nozzle diameter * tn * Nozzle wall in shear unit stress =
½ * π * 6.3450 * 0.2800 * 11970 = **33400** lb.

Upper fillet in shear = ½ * π * Nozzle OD * weld leg * upper fillet in shear unit stress = ½ * π * 6.6250 * 0.1875 * 8379 = **16300** lb.

Inner fillet in shear = ½ * π * Nozzle OD * weld leg * inner fillet in shear unit stress = ½ * π * 6.6250 * 0.1875 * 8379 = **16300** lb.

Load to be carried by welds, per UG-41(b)(1) and Fig. UG-41.1 sketch (a)

W = [A - A1 + 2 tn fr1(E1t - Ftr)] Sv = [0.1451 - 0.9807 + 2 * 0.2800 * 0.8550 * (1.00 * 0.1875 - 1.0000 * 0.0236)] * 20000 = **-15142** lb.

W1-1 = (A2 + A5 + A41 + A42) * Sv = (0.2226 + 0.0000 + 0.0301 + 0.0000) * 20000 = **5050** lb.

W2-2 = (A2 + A3 + A41 + A43 + 2 tn t fr1) Sv = (0.2226 + 0.2244 + 0.0301 + 0.0301 + 2 * 0.2800 * 0.1875 * 0.8550) * 20000 = **11900** lb.

W3-3 = (A2 + A3 + A5 + A41 + A42 + A43 + 2 tn t fr1) * Sv =
(0.2226 + 0.2244 + 0.0000 + 0.0301 + 0.0000 + 0.0301 + 2 * 0.2800 * 0.1875 * 0.8550) * 20000 = **11900** lb.

Check Strength Paths

Path 1-1 = Upper fillet in shear + Nozzle wall in shear = 16300 + 33400 = **49700** lb.

Path 2-2 = Upper fillet in shear + Inner fillet in shear =
16300 + 16300 = **32600** lb.

Path 3-3 = Upper fillet in shear + Inner fillet in shear = 16300 + 16300 = **32600** lb.

South Gate Engineering LLC
3" RELIEF

Customer: **SLABY ENVIRONMENTAL, INC.**
Job No: 9516-1
Number: 4
ID Number: 4

Vessel Number: VFT72-72E
Mark Number: E

Date Printed: 6/11/2007

Nozzle Design Information

Design Pressure:	10.00 PSI		Design Temperature:	180 °F	
Static Head:	0.30 PSI		Nozzle Efficiency (E):	100 %	
Nozzle Material:	SA-106 Gr B		Joint Efficiency (E_1):	1.00	
			Factor B Chart:	CS-2	
External Projection:	6.0000 in.		Allowable Stress at Design Temperature (S_n):	17100 PSI	
Internal Projection:	0.1875 in.		Allowable Stress at Ambient Temperature:	17100 PSI	
Inside Corrosion Allowance:	0.0000 in.		Correction Factor (F):	1.00	
External Corrosion Allowance:	0.0000 in.		Passes through a Category A Joint:	No	
Nozzle Pipe Size:	3		Nozzle Pipe Schedule:	40	
Nozzle ID (new):	3.0680 in.		Nozzle Wall Thickness(new):	0.2160 in.	
Nozzle ID (corroded):	3.0680 in.		Nozzle Wall Thickness(corroded):	0.2160 in.	
Developed Opening:	3.2230 in.		Tangential Dimension L:	22.0000 in.	
Outer "h" Limit:	0.4218 in.		Upper Weld Leg Size(Weld 41):	0.1875 in.	
Internal "h" Limit:	0.4218 in.		Internal Weld Leg Size(Weld 43):	0.1875 in.	
OD, Limit of Reinforcement:	6.4460 in.		Outside Groove Weld Depth:	0.1250 in.	

Minimum Design Metal Temperature

Min. Temp. Curve:	B	Pressure at MDMT:	10.00	PSI
UCS-66(b) reduction:	Yes	Minimum Design Metal Temperature:	-20	°F
UCS-68(c) reduction:	No	Computed Minimum Temperature:	-155	°F

Host Component: Head 1 - 100:6 72" O.D TOP HEAD

Material:	SA-516 Gr 70	Head wall thickness(new):	0.1875	in.
Material Stress(S_v):	20000 PSI	Head wall thickness - thin out (corroded):	0.1687	in.

Nozzle Detail Information

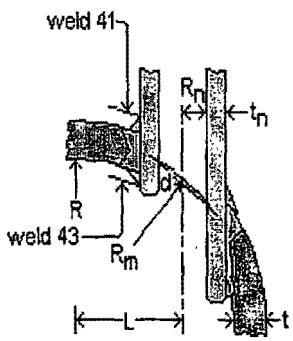

Fig. UW-16.1 (e)

Upper Weld Leg Size(Weld 41): 0.1875 in.

Internal Weld Leg Size(Weld 43): 0.1875 in.

Nozzle Wall Thickness(t_n): 0.2160 in.

Outside Groove Weld Depth: 0.1250 in.

tangential to the vessel wall, attached by a groove weld.
Pipe Size: 3 Schedule: 40
Nozzle is adequate for UG-45 requirements.
Opening is adequately reinforced for Internal Pressure.
Reinforcement calculations are not required per UG-36(c)(3)(a)See Uw-14 for exceptions.
Weld Strength Paths are adequate.

Required Head Thickness per Paragraph UG-37(a)

$$tr = \frac{PLoM}{(2SE + P * (M - 0.2))} = \frac{10.30 * 72.0000 * 1.0000}{(2 * 20000 * 1 + 10.30 * (1.0000 - 0.2))}$$ = **0.0185** in.

Nozzle Required Thickness Calculations

Required Nozzle Thickness for Internal Pressure per Paragraph UG-37(a)

$$trn = \frac{PRn}{SE - 0.6P} = \frac{10.30 * 1.5340}{17100 * 1 - 0.6 * 10.30}$$ = **0.0009** in.

Strength Reduction Factors

$$fr1 = \frac{Sn}{Sv} = \frac{17100}{20000} = 0.8550 \qquad fr2 = \frac{Sn}{Sv} = \frac{17100}{20000} = 0.8550 \qquad fr3 = \frac{Sn}{Sv} = \frac{17100}{20000} = 0.8550$$

UG-45 Thickness Calculations

Nozzle Thickness for Pressure Loading (plus corrosion) per Paragraph UG-45(a)

$$t = \frac{PRn}{SE - 0.6P} + Ca + ext.\ Ca = \frac{10.30 * 1.5340}{17100 * 1.00 - 0.6 * 10.30} + 0.0000 + 0.0000$$ = **0.0009** in.

Nozzle Thickness for Internal Pressure (plus corrosion) per Paragraph UG-45(b)(1)

$$t = \frac{PLoM}{(2SE + P * (M - 0.2))} + Ca + ext.\ Ca = \frac{10.30 * 72.0000 * 1.7693}{(2 * 20000 * 1 + 10.30 * (1.7693 - 0.2))} + 0.0000 + 0.0000$$

= Greater Of ($0.0328_{(Calculated)}$, $0.0625_{(Minimum\ Allowed)}$) + 0.0000 (corrosion) + 0.0000 (ext. corrosion) = **0.0625** in.

Minimum Thickness of Standard Wall Pipe (plus corrosion) per Paragraph UG-45(b)(4)

t = minimum thickness of standard wall pipe + Ca + ext. Ca = **0.1890** in.

Nozzle Minimum Thickness per Paragraph UG-45(b)

t = Smallest of UG-45(b)(1) or UG-45(b)(4) = **0.0625** in.

Wall thickness = tn * 0.875(pipe) = **0.1890** is greater than or equal to UG-45 value of **0.0625**

Nozzle Weld Strength Calculations

Attachment Weld Strength per Paragraph UW-16

Weld 41 tmin = smaller of 0.75, t, or tn = smaller of 0.75, 0.1687, or 0.2160 = **0.1687** in.

Weld 41 Leg min. = $\frac{\text{(smaller of 0.25 or (tmin * 0.7)) + ext. CA}}{0.7} = \frac{0.1181}{0.7}$ = **0.1687** in.

Weld 41, actual weld leg = **0.1875** in.

Weld 43 tmin = smaller of 0.75, t, or tn = smaller of 0.75, 0.1687, or 0.2160 = **0.1687** in.

Weld 43 Leg min. = $\frac{\text{(smaller of 0.25 or (tmin * 0.7)) + ca}}{0.7} = \frac{\text{(smaller of 0.25 or (0.1687 * 0.7)) + 0.0000}}{0.7} = \frac{0.1181}{0.7}$ = **0.1687** in.

Weld 43, actual weld leg = **0.1875** in.

Unit Stresses per Paragraphs UG-45(c) and UW-15

Nozzle wall in shear = 0.70 * Sn = 0.70 * 17100 = **11970** PSI
Upper fillet, Weld 41, in shear = 0.49 * Material Stress = 0.49 * 17100 = **8379** PSI
Vessel groove weld, in tension = 0.74 * Material Stress = 0.74 * 17100 = **12654** PSI
Inner fillet, Weld 43, in shear = 0.49 * Material Stress = 0.49 * 17100 = **8379** PSI

Strength of Connection Elements

Nozzle wall in shear = ½ * π * mean nozzle diameter * tn * Nozzle wall in shear unit stress = ½ * π * 3.2840 * 0.2160 * 11970 = **13300** lb.
Upper fillet in shear = ½ * π * Nozzle OD * weld leg * upper fillet in shear unit stress = ½ * π * 3.5000 * 0.1875 * 8379 = **8630** lb.
Groove Weld in Tension = ½ * π * Nozzle OD * groove depth * groove weld tension unit stress = ½ * π * 3.5000 * 0.1250 * 12654 = **8690** lb.
Inner fillet in shear = ½ * π * Nozzle OD * weld leg * inner fillet in shear unit stress = ½ * π * 3.5000 * 0.1875 * 8379 = **8630** lb.

Load to be carried by welds, per UG-41(b)(1) and Fig. UG-41.1 sketch (a)

W = [A - A1 + 2 tn fr1(E1t - Ftr)] Sv = [0.0608 - 0.4747 + 2 * 0.2160 * 0.8550 * (1.00 * 0.1687 - 1.0000 * 0.0185)] * 20000 = **-7168** lb.
W1-1 = (A2 + A5 + A41 + A42) * Sv = (0.1551 + 0.0000 + 0.0301 + 0.0000) * 20000 = **3700** lb.
W2-2 = (A2 + A3 + A41 + A43 + 2 tn t fr1) Sv = (0.1551 + 0.0693 + 0.0301 + 0.0301 + 2 * 0.2160 * 0.1687 * 0.8550) * 20000 = **6940** lb.
W3-3 = (A2 + A3 + A5 + A41 + A42 + A43 + 2 tn t fr1) * Sv = (0.1551 + 0.0693 + 0.0000 + 0.0301 + 0.0000 + 0.0301 + 2 * 0.2160 * 0.1687 * 0.8550) * 20000 = **6940** lb.

Check Strength Paths

Path 1-1 = Upper fillet in shear + Nozzle wall in shear = 8630 + 13300 = **21930** lb.
Path 2-2 = Upper fillet in shear + Groove weld in tension + Inner fillet in shear = 8630 + 8690 + 8630 = **25950** lb.
Path 3-3 = Upper fillet in shear + Inner fillet in shear + Groove weld in tension = 8630 + 8630 + 8690 = **25950** lb.

South Gate Engineering LLC

Leg 1

Customer: **SLABY ENVIRONMENTAL, INC.**
Job No: 9516-1
Mark Number: LEG1

Vessel Number: VFT72-72E

Date Printed: 6/11/2007

Leg Information

Design Temperature:	180	°F	Factor B Chart:	CS-2	
Material:	SA-106 Gr B		Material Stress (Hot):	17100	PSI
Condition:			Material Stress (Cold):	17100	PSI
B.P. to Vessel Attachment Length (L):	8.7500	in.	Modulus of Elasticity:	28.9	10^6 PSI
Direction of Applied Force:	0	°	Yield Strength:	32420	PSI
Length of Supports:	27.5000	in.	Dist. From Reference Line:	12.0000	in.
Quantity:	4				
Type: Pipe			Molded to Head Curvature: Yes		
Description:	6" SCH. 40 PIPE LEG				
Pipe I.D.:	6.0650	in.	Pipe Thickness:	0.2800	in.
Weld Attachment Length Top (W_t):	3.3125	in.	Side (W_s):	18.6250	in.
Weld Leg Dimension (W_l):	0.2500	in.	Eccentricity:	3.3125	in.

Base Plate Information

Design Temperature:	180	°F			
Material:	SA-36		Material Stress (Hot):	16600	PSI
Condition:			Material Stress (Cold):	16600	PSI
Length:	10.0000	in.	Yield Strength:	33320	PSI
Width:	12.0000	in.	Thickness:	0.5000	in.
Leg to B.P. Attachment Factor:	0.7500		Bending Coefficient (C_m):	1.0000	
Effective Length Factor (K):	1.5000				

Anchor Bolt Information

Material:	SA-193 Gr B7 <=2.5"		Material Stress (Hot):	25000	PSI
Condition:			Material Stress (Cold):	25000	PSI
Diameter:	1.0000	in.	Root Area:	0.5510	sq. in.
Quantity:	1		Bolt Circle Diameter:	79.3750	in.
Ultimate 28 Day Concrete Strength:	3000	PSI			

ASME Flange Design Information

Host	Description	Type	Size (in.)	Material	ASME Class	Material Group	MAP (PSI)
6" 150# NOZZLE A	ASME Flange 1	Slip-On	6	SA-105	150	1.1	265.00
6" NOZZLE B	ASME Flange 2	Slip-On	6	SA-105	150	1.1	265.00
3" RELIEF	ASME Flange 3	Slip-On	3	SA-105	150	1.1	265.00

Loading Summary

Type	Starting Elevation (in.)	Ending Elevation (in.)	Density (lb./Ft^3)	Thickness (in.)	Wind Diameter (in.)	Wind Pressure (lb./ft.²)
Liquid	3.0000	114.0000	62.4300	-	-	-

MDMT Report by Components

Design MDMT is -20 °F

Component	Material	Curve	Pressure	MDMT
72" O.D. 72" LG. SHELL	SA-516 Gr 70	B	10.00 PSI	-155 °F
6" 150# NOZZLE A	SA-106 Gr B	B	10.00 PSI	-155 °F
6" NOZZLE B	SA-106 Gr B	B	10.00 PSI	-155 °F
100:6 72" O.D TOP HEAD	SA-516 Gr 70	B	10.00 PSI	-20 °F
MANWAY	SA-106 Gr C	B	10.00 PSI	-125 °F
3" RELIEF	SA-106 Gr B	B	10.00 PSI	-155 °F
72" O.D BOTTOM HEAD	SA-516 Gr 70	B	10.00 PSI	-20 °F

Component with highest MDMT: 100:6 72" O.D TOP HEAD.

Computed MDMT = -20 °F

The required design MDMT of -20 °F has been met or exceeded for the calculated MDMT values.

ANSI Flanges Are Not Included in MDMT Calculations.

South Gate Engineering LLC

Customer: **SLABY ENVIRONMENTAL, INC.**
Job No: 9516-1

Vessel Number: VFT72-72E

Date Printed: 6/11/2007

MAWP Report by Components

Component	Design Pressure	Static Head	Vessel MAWP New & Cold UG-98(a)	Component MAWP Hot & Corroded UG-98(b)	Vessel MAWP Hot & Corroded UG-98(a)
72" O.D. 72" LG. SHELL	10.00 PSI	3.20 PSI	69.87 PSI	73.07 PSI	69.87 PSI
6" 150# NOZZLE A	10.00 PSI	1.33 PSI	72.97 PSI	74.30 PSI	72.97 PSI
ASME Flange Class: 150 Gr:1.1		1.33 PSI	283.67 PSI	265.00 PSI	263.67 PSI
6" NOZZLE B	10.00 PSI	3.10 PSI	71.20 PSI	74.30 PSI	71.20 PSI
ASME Flange Class: 150 Gr:1.1		3.10 PSI	281.90 PSI	265.00 PSI	261.90 PSI
100:6 72" O.D TOP HEAD	10.00 PSI	0.50 PSI	44.62 PSI	45.12 PSI	44.62 PSI
MANWAY	10.00 PSI	0.30 PSI	68.71 PSI	69.01 PSI	68.71 PSI
3" RELIEF	10.00 PSI	0.30 PSI	93.62 PSI	93.92 PSI	93.62 PSI
ASME Flange Class: 150 Gr:1.1		0.30 PSI	284.70 PSI	265.00 PSI	264.70 PSI
72" O.D BOTTOM HEAD	10.00 PSI	3.80 PSI	41.32 PSI	45.12 PSI	41.32 PSI

NC = Not Calculated Inc = Incomplete

Summary

Component with the lowest vessel MAWP(New & Cold) : **72" O.D BOTTOM HEAD**
The lowest vessel MAWP(New & Cold) : **41.32** PSI

Component with the lowest vessel MAWP(Hot & Corroded) : **72" O.D BOTTOM HEAD**
The lowest vessel MAWP(Hot & Corroded) : **41.32** PSI

Pressures are exclusive of any external loads.

Flange pressures listed here do not consider external loadings

Summary Information

	Dry Weight	Flooded Weight
Shell	861.93 lb.	11354.62 lb.
Head	538.33 lb.	3325.42 lb.
Nozzle	89.25 lb.	89.25 lb.
ANSI Flange	46.00 lb.	46.00 lb.
Totals	1535.50 lb.	14815.29 lb.

	Volume
Shell	1256.00 Gal.
Head	334.18 Gal.
Nozzle	5.35 Gal.
Totals	1595.53 Gal.

	Area
Shell	113.10 Sq. Ft.
Head	70.45 Sq. Ft.
Nozzle	8.00 Sq. Ft.
Totals	191.55 Sq. Ft.

Hydrostatic Test Information (UG-99)

Gauge at Top

Component with controlling ratio is : 72" O.D. 72" LG. SHELL
Component with controlling pressure is : 72" O.D. 72" LG. SHELL

$$\text{Calculated Test Pressure} = P * 1.3 * \frac{\text{Cold Stress}}{\text{Hot Stress}} = 10.00 * 1.3 * \frac{20000}{20000} =$$ **13.00 PSI**

Table of Contents

72" O.D. 72" LG. SHELL	1
100:6 72" O.D TOP HEAD	2
72" O.D BOTTOM HEAD	3
MANWAY	4
6" 150# NOZZLE A	8
6" NOZZLE B	12
3" RELIEF	16
Leg Information	19
ASME Flanges	20
Attachment/Loading Information	21
MDMT Summary	22
MAWP Summary	23
Summary Information	24

Section Six

PACO PUMPS

SM 1570-0 Material Data Sheet

By:
Date: 12/10/2008
Rev. #

Project:	Tag #	P.O. #
Location:	Model: **1570-0**	Cust Ref#
Contractor:	Qty:	Agent/Rep:
Engineer:	Service:	Doc #

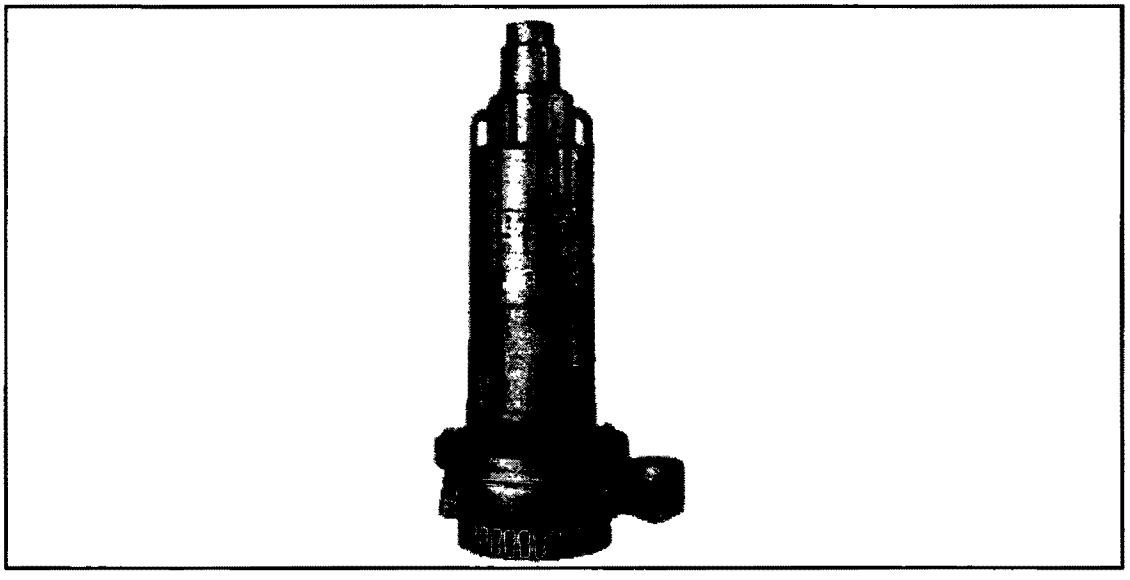

PACO submersible pump model SM offers a flexible option to sump and drainage applications. The compact drop in design and rugged Class 30 cast iron construction of the pump and motor make it suitable for a variety of below grade pumping applications.

The semi-open impeller and volute are constructed of Class 30 iron and pump has a heavy duty strainer removable for access and inspection.

PACOs rugged air-filled submersible motor constructed of heavy cast iron features an oversized stainless steel shaft, tandem oil-lubricated mechanical seals, a two probe moisture sensing device, thermal overload protection and heavy duty ball bearings designed to withstand all radial and thrust loads throughout the entire pump operating range. All motors are UL labeled for Class 1, Division 1, Group D making them suitable for hazardous location applications.

Cord Length	25 ft.	Impeller Cap Screw	S.S., AISI-303
Casing	Cast Iron, ASTM-A48, CL 30	Impeller Washer	S.S., AISI-303
Motor Housing	Cast Iron, ASTM A48, CL30	Impeller Key	Steel, AISI 1045
Motor Shaft	S.S. AISI-416	Seal Type	Tandem Seal
Impeller	Cast Iron, ASTM-A48, C1.30	Seal Material	Ceramic/Carbon/Buna

BLANK PAGE

BARNES®

INSTALLATION and OPERATION MANUAL
Submersible Sewage Ejector

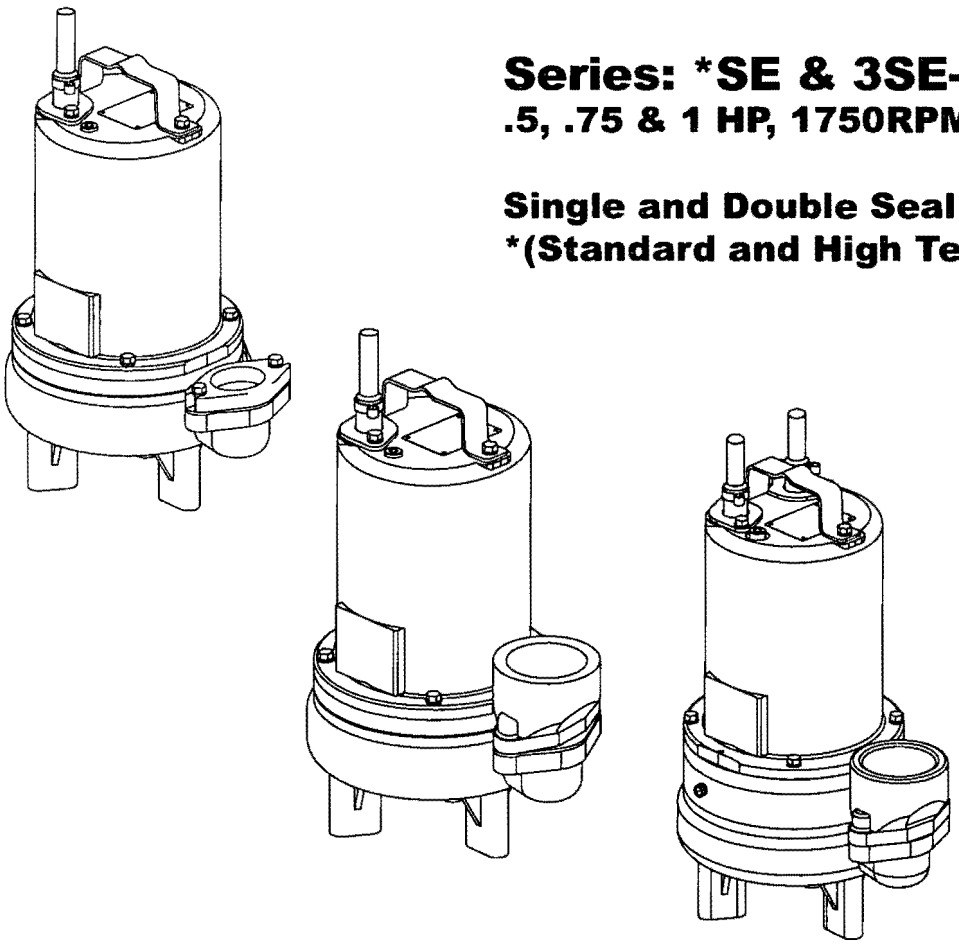

Series: *SE & 3SE-L & DS
.5, .75 & 1 HP, 1750RPM, 60 Hz.

Single and Double Seal
***(Standard and High Temperature)**

IMPORTANT! ***Read all instructions in this manual before operating pump. As a result of Crane Pumps & Systems, Inc., constant product improvement program, product changes may occur. As such Crane Pumps & Systems reserves the right to change product without prior written notification.***

CRANE®
A Crane Co. Company

PUMPS & SYSTEMS

420 Third Street
Piqua, Ohio 45356
Phone: (937) 778-8947
Fax (937) 773-7157
www.cranepumps com

83 West Drive, Bramton
Ontario, Canada L6T 2J6
Phone (905) 457-6223
Fax (905) 457-2650

Submersible Wastewater Pump Association SWPA MEMBER

Form No. 105240-Rev. P

TABLE OF CONTENTS

SAFETY FIRST 3

A. PUMP SPECIFICATIONS ..... 4 - 6

B GENERAL INFORMATION 7

C. INSTALLATION ..... 7 - 9

ELECTRICAL DATA ..... 9 - 10

D START-UP OPERATION 9

E. PREVENTATIVE MAINTENANCE 11

F. SERVICE and REPAIR ..... 11 - 18

G. REPLACEMENT PARTS 15

TROUBLE SHOOTING 19

SE-L & 3SE-L SINGLE SEAL - CROSS-SECTION (Fig. 16) 20
SE-L & 3SE-L SINGLE SEAL - EXPLODED VIEW (Fig. 17) 21

SE-HT SINGLE SEAL - CROSS SECTION (Fig. 18) 22
SE-HT SINGLE SEAL - EXPLODED VIEW (Fig. 19) 23

3SE-DS DOUBLE SEAL - CROSS-SECTION (Fig. 20) 24
3SE-DS DOUBLE SEAL - EXPLODED VIEW (Fig. 21) 25

PARTS LIST ..... 26 - 28

RETURNED GOODS POLICY 29
WARRANTY 30
START-UP REPORT ..... 33 - 34
WARRANTY REGISTRATION

SPECIAL TOOLS AND EQUIPMENT
INSULATION TESTER (MEGGER)
DIELECTRIC TESTER
SEAL TOOL KIT (see parts list)
PRESSURE GAUGE KIT (see parts list)

Other brand and product names are trademarks or registered trademarks of their respective holders
® Barnes is a registered trademark of Crane Pumps & Systems, Inc
1999, 2002, 2003, 5/04, 1/06, 9/06, 12/06, 2/07

Alteration Rights Reserved

SAFETY FIRST!

Please Read This Before Installing Or Operating Pump.
This information is provided for **SAFETY and to PREVENT EQUIPMENT PROBLEMS.** To help recognize this information, observe the following symbols:

IMPORTANT! Warns about hazards that can result in personal injury or Indicates factors concerned with assembly, installation, operation, or maintenance which could result in damage to the machine or equipment if ignored.

CAUTION ! Warns about hazards that can or will cause minor personal injury or property damage if ignored Used with symbols below.

WARNING ! Warns about hazards that can or will cause serious personal injury, death, or major property damage if ignored. Used with symbols below.

Hazardous fluids can cause fire or explosions, burnes or death could result

Extremely hot - Severe burnes can occur on contact

Biohazard can cause serious personal injury.

Hazardous fluids can Hazardous pressure, eruptions or explosions could cause personal injury or property damage

Rotating machinery Amputation or severe laceration can result.

Hazardous voltage can shock, burn or cause death

Only qualified personnel should install, operate and repair pump Any wiring of pumps should be performed by a qualified electrician

WARNING ! - To reduce risk of electrical shock, pumps and control panels must be properly grounded in accordance with the National Electric Code (NEC) or the Canadian Electrical Code (CEC) and all applicable state, province, local codes and ordinances.

WARNING! - To reduce risk of electrical shock, always disconnect the pump from the power source before handling or servicing. Lock out power and tag

WARNING! Operation against a closed discharge valve will cause premature bearing and seal failure on any pump, and on end suction and self priming pump the heat build may cause the generation of steam with resulting dangerous pressures. It is recommended that a high case temperature switch or pressure relief valve be installed on the pump body.

CAUTION ! Never operate a pump with a plug-in type power cord without a ground fault circuit interrupter.

CAUTION! Pumps build up heat and pressure during operation-allow time for pumps to cool before handling or servicing.

WARNING! - DO NOT pump hazardous materials (flammable, caustic, etc.) unless the pump is specifically designed and designated to handle them

Do not block or restrict discharge hose, as discharge hose may whip under pressure.

WARNING! - DO NOT wear loose clothing that may become entangled in the impeller or other moving parts.

WARNING! - Keep clear of suction and discharge openings **DO NOT** insert fingers in pump with power connected

Always wear eye protection when working on pumps.

Make sure lifting handles are securely fastened each time before lifting **DO NOT** operate pump without safety devices in place. Always replace safety devices that have been removed during service or repair. Secure the pump in its operating position so it can not tip over, fall or slide.

DO NOT exceed manufacturers recommendation for maximum performance, as this could cause the motor to overheat.

DO NOT remove cord and strain relief. Do not connect conduit to pump.

WARNING! Cable should be protected at all times to avoid punctures, cut, bruises and abrasions - inspect frequently. Never handle connected power cords with wet hands.

WARNING! To reduce risk of electrical shock, all wiring and junction connections should be made per the NEC or CEC and applicable state or province and local codes. Requirements may vary depending on usage and location

WARNING! Submersible Pumps are not approved for use in swimming pools, recreational water installations, decorative fountains or any installation where human contact with the pumped fluid is common

WARNING! Products Returned Must Be Cleaned, Sanitized, Or Decontaminated As Necessary Prior To Shipment, To Insure That Employees Will Not Be Exposed To Health Hazards In Handling Said Material All Applicable Laws And Regulations Shall Apply.

Bronze/brass and bronze/brass fitted pumps may contain lead levels higher than considered safe for potable water systems Lead is known to cause cancer and birth defects or other reproductive harm. Various government agencies have determined that leaded copper alloys should not be used in potable water applications. For non-leaded copper alloy materials of construction, please contact factory.

IMPORTANT! - Crane Pumps & Systems, Inc is not responsible for losses, injury, or death resulting from a failure to observe these safety precautions, misuse or abuse of pumps or equipment.

SECTION: A - PUMP SPECIFICATIONS:

2" Pumps (Standard & High Temperature)

DISCHARGE.....2" NPT, Female, Vertical, Bolt-on Flange
LIQUID TEMPERATURE:
Standard.....104°F (40°C) Continuous
High Temp.....200°F (93°C) Continuous
VOLUTE.....Cast Iron ASTM A-48, Class 30
MOTOR HOUSING...Cast Iron ASTM A-48, Class 30
SEAL PLATE.....Cast Iron ASTM A-48, Class 30
IMPELLER:
Design.....2 Vane, open, with pump out vanes on back side. Dynamically balanced, ISO G6.3
Material.....Cast Iron ASTM A-48, Class 30
SHAFT.....416 Stainless Steel
SQUARE RINGS.....Buna-N
HARDWARE.....300 Series Stainless Steel
PAINT.....Air Dry Enamel
SEAL:
Design.....Single Mechanical
Material.....Carbon/Ceramic/Buna-N Hardware -300 Series Stainless
CORD ENTRY.....30 ft. (9.1m) Cord with plug on 120 volt & 5HP, 240 volt, 1 phase. Quick connect custom molded for sealing and strain relief
SPEED.....1750 RPM (Nominal)
UPPER BEARING.....Single Row, Ball, Oil lubricated
Load.....Radial
LOWER BEARING....Single Row, Ball, Oil lubricated
Load.....Radial & Thrust
MOTOR:
Design.....NEMA L -Single Phase, NEMA B -Three phase Torque Curve, Oil Filled, Squirrel Cage Induction
Insulation.....Class B, Class F for High Temp
SINGLE PHASE.....Permanent Split Capacitor (PSC) Includes Overload Protection in Motor
THREE PHASE.....200-240/480 is Tri-Voltage notor 600V. Requires overload Protection to be included in control panel
LEVEL CONTROL....**"A"** - Wide Angle, PVC, Mechanical, 15 ft (5m) cord with Piggy-Back Plug, N/O
"AU"- Wide Angle, Polypropylene, Mechanical, N/O Integral to pump. ON and OFF Points are adjustable

OPTIONAL EQUIPMENT Seal Material, Impeller Trims, Additional cord, Normally Closed Temperature Sensors with cord for 3 phase pumps (Requires relay in control panel), *Inlet Strainer for High Temperature Models.

(*) 3/4" Spherical solids handling with optional inlet stainer.

IMPORTANT ! - High Temperature

1.) PUMP MAY BE OPERATED "DRY" FOR EXTENDED PERIODS WITHOUT DAMAGE TO MOTOR AND/OR SEALS
2) THIS PUMP IS NOT APPROPRIATE FOR THOSE APPLICATIONS SPECIFIED AS CLASS I DIVISION I HAZARDOUS LOCATIONS.
3) INSTALLATIONS SUCH AS DECORATIVE FOUNTAINS OR WATER FEATURES PROVIDED FOR VISUAL ENJOYMENT MUST BE INSTALLED IN ACCORDANCE WITH THE NATIONAL ELECTRIC CODE ANSI/NFPA 70 AND/OR THE AUTHORITY HAVING JURISDICTION THIS PUMP IS NOT INTENDED FOR USE IN SWIMMING POOLS, RECREATIONAL WATER PARKS, OR INSTALLATIONS IN WHICH HUMAN CONTACT WITH PUMPED MEDIA IS A COMMON OCCURRENCE
4) MUST USE A **HIGH TEMPERATURE** WIDE ANGLE LEVEL CONTROL IN HIGH TEMPERATURE APPLICATIONS

3" Pumps

DISCHARGE.....3" NPT, Female, Vertical, Bolt-on Flange
LIQUID TEMP.....104°F (40°C) Continuous
VOLUTE.....Cast Iron ASTM A-48, Class 30
MOTOR HOUSING...Cast Iron ASTM A-48, Class 30
SEAL PLATE.....Cast Iron ASTM A-48, Class 30
IMPELLER:
Design.....2 Vane, open, with pump out vanes on back side Dynamically balanced, ISO G6.3
Material.....Cast Iron ASTM A-48, Class 30
SHAFT.....416 Stainless Steel
SQUARE RINGS.....Buna-N
HARDWARE.....300 Series Stainless Steel
PAINT.....Air Dry Enamel
SEAL:
Design.....Single Mechanical or Tandem Mechanical with Oil Filled Reservoir
Material.....Carbon/Ceramic/Buna-N Hardware -300 Series Stainless
CORD ENTRY.....30 ft (9 1m) Cord. Plug on 120 Volt & 5HP. 240 Volt 1 Phase. Quick connect custom molded for sealing and strain relief
SPEED.....1750 RPM (Nominal)
UPPER BEARING.....Single Row, Ball, Oil lubricated
Load.....Radial
LOWER BEARING....Single Row, Ball, Oil lubricated
Load.....Radial & Thrust
MOTOR:
Design.....NEMA L -Single Phase, NEMA B -Three phase Torque Curve, Oil Filled, Squirrel Cage Induction
Insulation.....Class B
SINGLE PHASE.....Permanent Split Capacitor (PSC) Includes Overload Protection in Motor
THREE PHASE.....200-240/480 is Tri-Voltage. 600V. Requires Overload Protection to be included in control panel
OPTIONAL EQUIPMENT.....Seal Material, Impeller Trims, Additional cord, Normally Closed Temperature Sensors with cord for 3 phase pumps (Requires relay in control panel), Normally Open Moisture Sensor with cord for DS pumps.

IMPORTANT ! - Standard Temperature

1.) PUMP MAY BE OPERATED "DRY" FOR EXTENDED PERIODS WITHOUT DAMAGE TO MOTOR AND/OR SEALS
2) THIS PUMP IS APPROPRIATE FOR THOSE APPLICATIONS SPECIFIED AS CLASS I DIVISION II HAZARDOUS LOCATIONS.
3) THIS PUMP IS NOT APPROPRIATE FOR THOSE APPLICATIONS SPECIFIED AS CLASS I DIVISION I HAZARDOUS LOCATIONS.
4.) INSTALLATIONS SUCH AS DECORATIVE FOUNTAINS OR WATER FEATURES PROVIDED FOR VISUAL ENJOYMENT MUST BE INSTALLED IN ACCORDANCE WITH THE NATIONAL ELECTRIC CODE ANSI/NFPA 70 AND/OR THE AUTHORITY HAVING JURISDICTION THIS PUMP IS NOT INTENDED FOR USE IN SWIMMING POOLS, RECREATIONAL WATER PARKS, OR INSTALLATIONS IN WHICH HUMAN CONTACT WITH PUMPED MEDIA IS A COMMON OCCURRENCE

SE & SE-HT, Single Seal

inches (mm)

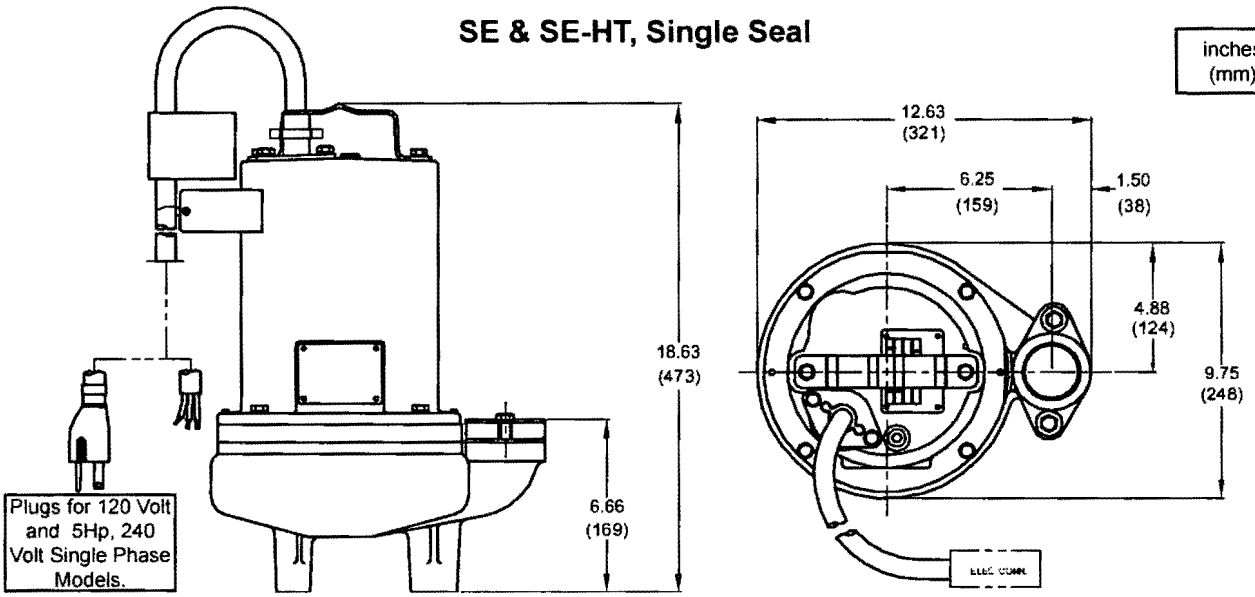

Plugs for 120 Volt and 5Hp, 240 Volt Single Phase Models.

SE-A & SE-HTA, Single Seal

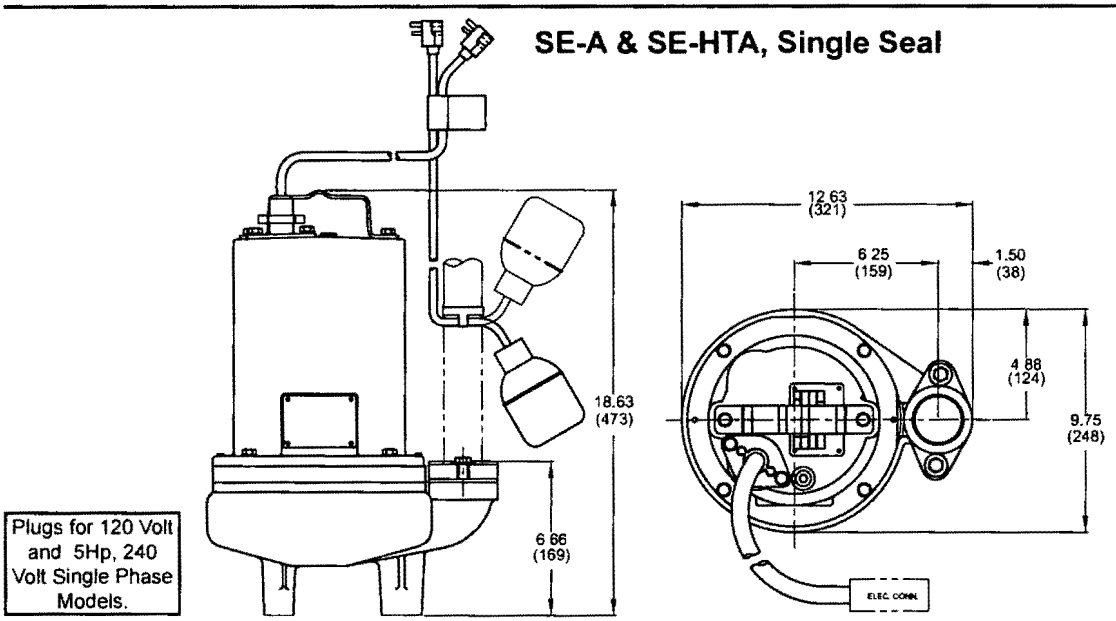

Plugs for 120 Volt and 5Hp, 240 Volt Single Phase Models.

SE-AU & SE-HTAU, Single Seal

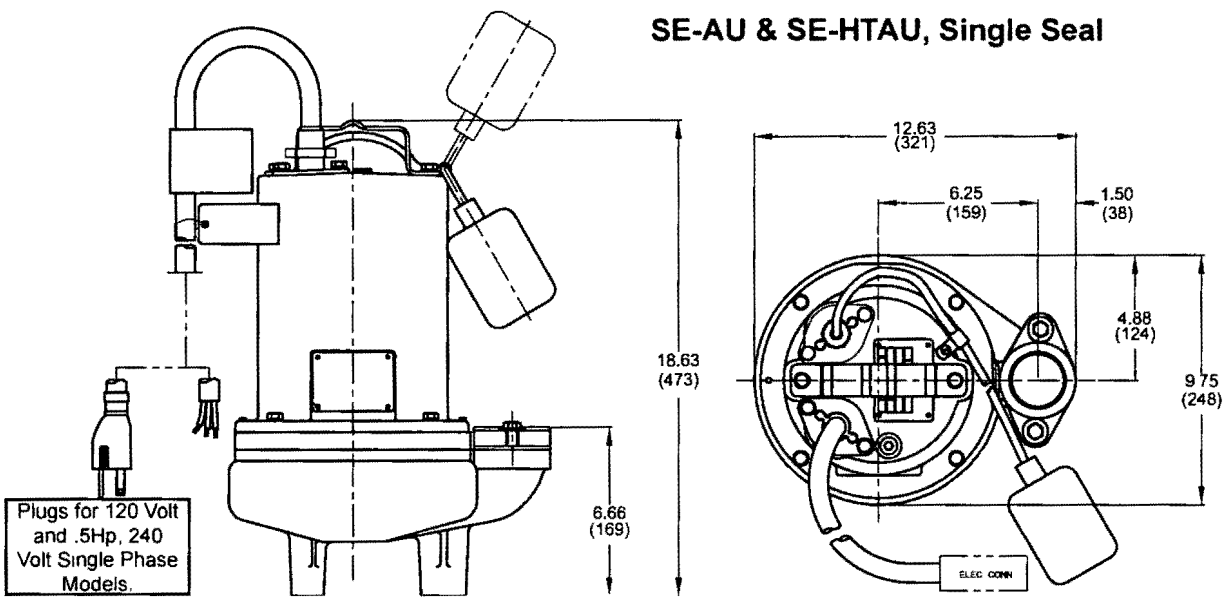

Plugs for 120 Volt and .5Hp, 240 Volt Single Phase Models.

3SE-L, Single Seal

inches (mm)

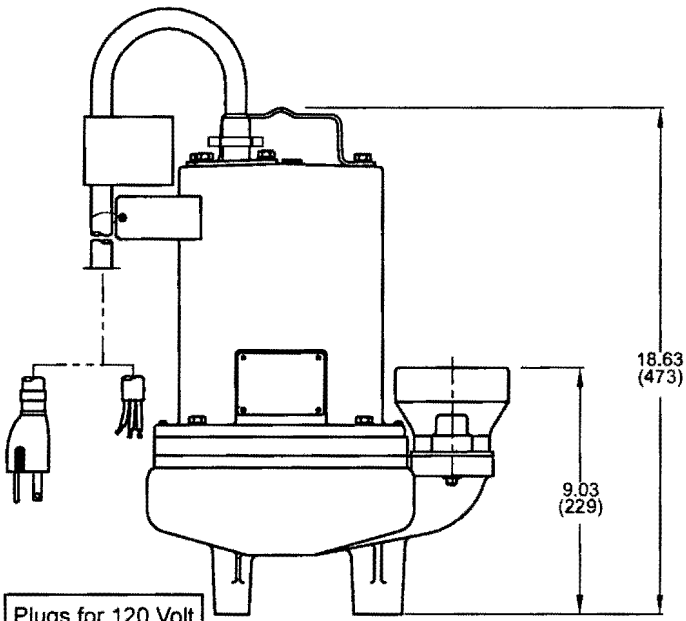

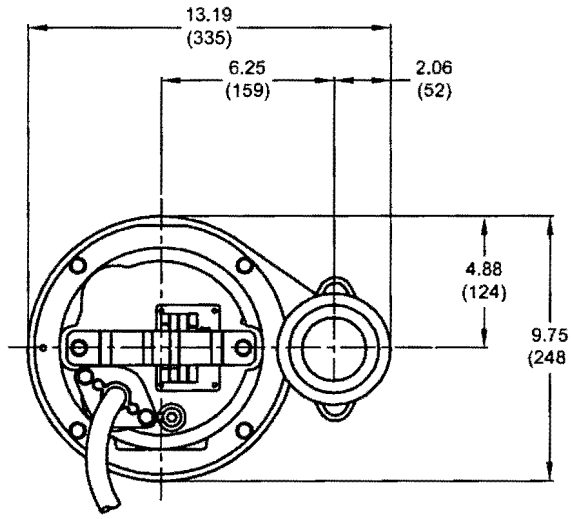

Plugs for 120 Volt and .5Hp, 240 Volt Single Phase Models

3SE-DS, Double Seal

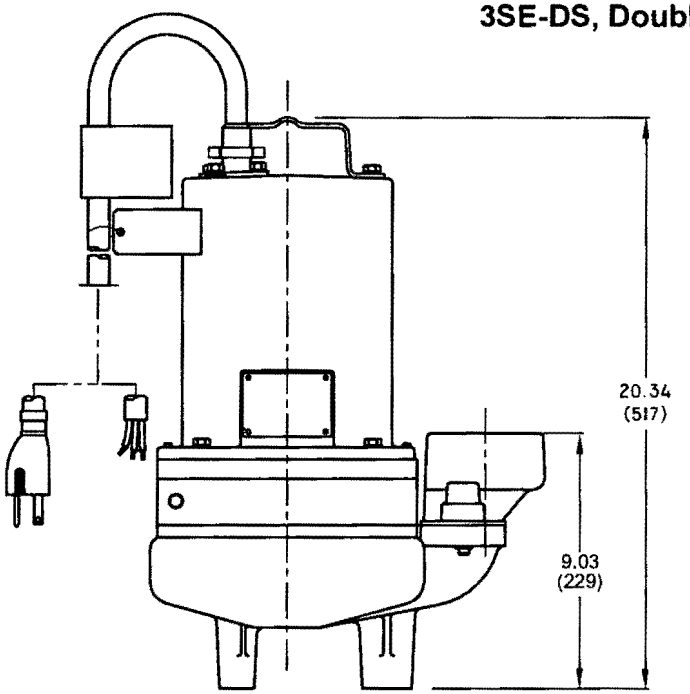

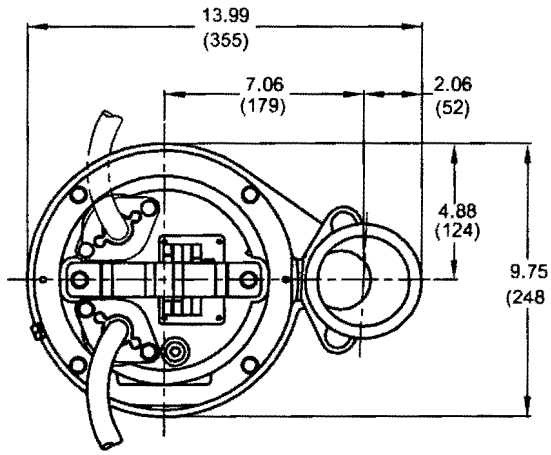

Plugs for 120 Volt and .5Hp, 240 Volt Single Phase Models.

SECTION B: GENERAL INFORMATION

B-1) To the Purchaser:
Congratulations! You are the owner of one of the finest pumps on the market today. CP&S pumps are products engineered and manufactured of high quality components. Over one hundred years of pump building experience along with a continuing quality assurance program combine to produce a pump which will stand up to the toughest applications. This manual will provide helpful information concerning installation, maintenance, and proper service guidelines.

B-2) Receiving:
Upon receiving the pump, it should be inspected for damage or shortages. If damage has occurred, file a claim immediately with the company that delivered the pump. If the manual is removed from the packaging, do not lose or misplace

B-3) Storage:
Short Term- CP&S Pumps are manufactured for efficient performance following short inoperative periods in storage. For best results, pumps can be retained in storage, as factory assembled, in a dry atmosphere with constant temperatures for up to six (6) months. Long Term- Any length of time exceeding six (6) months, but not more than twenty-four (24) months. The unit should be stored in a temperature controlled area, a roofed over walled enclosure that provides protection from the elements (rain, snow, wind-blown dust, etc.), and whose temperature can be maintained between +40 deg. F and +120 deg F (4.4 - 49°C). Pump should be stored in its original shipping container. On initial start up, rotate impeller by hand to assure seal and impeller rotate freely. If it is required that the pump be installed and tested before the long term storage begins, such installation will be allowed provided:

1.) The pump is not installed under water for more than one (1) month.
2) Immediately upon satisfactory completion of the test, the pump is removed, thoroughly dried, repacked in the original shipping container, and placed in a temperature controlled storage area.

B-4) Service Centers:
For the location of the nearest Barnes Service Center, check your Barnes representative or Crane Pumps & Systems, Inc., Service Department in Piqua, Ohio, telephone (937) 778-8947 or Crane Pumps & Systems Canada, in Brampton, Ontario, (905) 457-6223

SECTION C: INSTALLATION

C-1) Location:
These pumping units are self-contained and are recommended for use in a sump, lift station or basin. The sump, lift station or basin shall be vented in accordance with local plumbing codes. This pump is designed to pump sewage, effluent, or other nonexplosive or noncorrosive wastewater. and shall **NOT** be installed in locations classified as hazardous in accordance with the National Electrical Code (NEC), ANSI/NFPA 70 or the Canadian Electrical Code (CEC) Never install the pump in a trench, ditch or hole with a dirt bottom; the legs will sink into the dirt and the suction will become plugged.

C-1.1) Submergence:
It is recommended that the pump be operated in the submerged condition and the sump liquid level should never be less than 10 inches above the pump bottom (see Fig. 1).

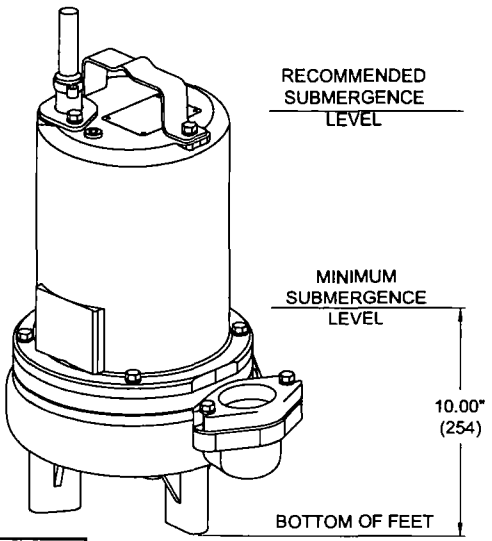

FIGURE 1

C-2) Discharge:
Discharge piping should be as short as possible. Both a check valve and a shut-off valve are recommended for each pump being used. The check valve is used to prevent backflow into the sump Excessive backflow can cause flooding and/or damage to the pump The shut-off valve is used to stop system flow during pump or check valve servicing.

Barnes Pumps supplies a Stainless Rail Package for the 2" models and also a variety of 2" and 3" break-away fitting discharge systems designed to allow the submersible wastewater pump to be installed or removed without requiring personnel to enter the wet well. Contact your local Barnes Pumps distributor for complete details.

Stainless Rail Package (Not Shown) - The package system comes complete and ready to place into the ground as outlined in the project specifications. The moveable portion of the Break Away Fitting (BAF), check valve, piping and guide bracket comes assembled on the pump along with the lifting cord. Insert pump bracket and moveable portion of BAF into the guide channel and lower pump into basin **(DO NOT DROP)** Now connect power and control cords to the junction box or control panel depending on system design

C-3) Liquid Level Controls:
The level controls are to be supported by a mounting bracket that is attached to the sump wall, cover or junction box. Cord grips are used to hold the cords in place on the mounting bracket. The control level can be changed by loosening the grip and adjusting the cord length as per the plans and specifications. Be certain that the level controls cannot hang up or foul in it's swing and that the pump is completely submerged when the level control is in the "Off" mode.

Figure 2 shows a typical installation of an "A" version float, (an "AU" version will attach to the pump), using a piggy-back plug.

TYPICAL INSTALLATION WITH WIDE ANGLE LEVEL CONTROL

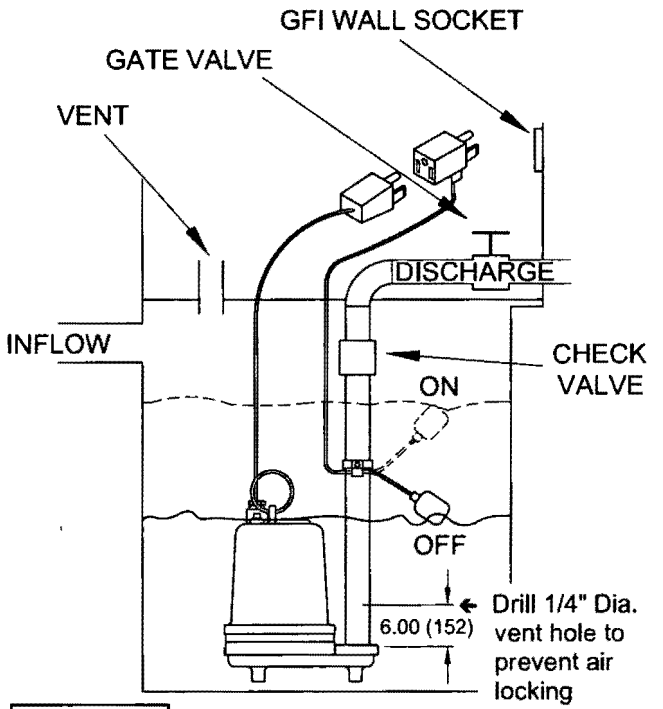

FIGURE 2

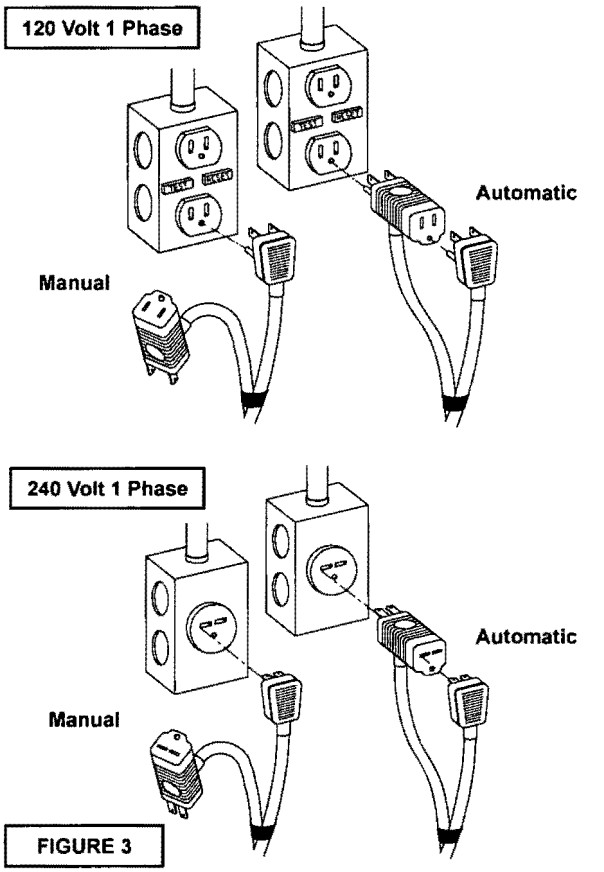

FIGURE 3

General Comments:

1) Never work in the sump with the power on

2) Level controls are factory set for a pumping differential of 9 inches. If that is the cycle desired, simply circle the discharge pipe with the pipe mounting strap, feed the end through the worm drive, and tighten with a screwdriver. Be certain that the level control cannot hang up or foul in it's swing. Also, make certain the pump impeller is still submerged when the level control is in the 'off' mode.

3) If a higher pump differential is needed, grip the cord near the neck of the float, then using the other hand, exert a steady force on the lower edge of the cable clamp. The cable clamp should slide up to the new pivot point. Attach the level control to the discharge hose in the manner described above

4) Plug the level control plug into the receptacle, then plug the pump into the piggyback plug. One cycle of operation should be observed, so that any potential problems can be corrected.

5) It is recommended that the float should be set to insure that the sump well liquid level never drops below the top of the motor housing.

6.) Figure 3 shows a typical connection for pumps with the wide angle float and piggy-back plug. For manual and automatic operations.

Automatic - Plug float cord into outlet, then plug pump cord into float cord.

Manual - Plug pump cord directly int outlet.

C-4) Electrical Connections:

C-4.1) Power and Control Cable:

The cord assembly mounted to the pump must not be modified in any way except for shortening to a specific application. Any splice between the pump and the control panel must be made in accordance with all applicable electric codes. It is recommended that a junction box, if used, be mounted outside the sump or be of at least Nema 4 (EEMAC-4) construction if located within the wet well. **Do not use the power or control cable to lift pump. NOTE: The white wire is NOT a neutral or ground lead, but a power carrying conductor.**

C-4.2) Overload Protection :

C-4.2-1) Three Phase (Optional) - The normally closed (N/C) thermal sensor is embedded in the motor windings and will detect excessive heat in the event an overload condition occurs The thermal sensor will trip when the windings become too hot and will automatically reset itself when the pump motor cools to a safe temperature. It is recommended that the thermal sensor be connected in series to an alarm device to alert the operator of an overload condition, and/or the motor starter coil to stop the pump. In the event of an overload, the source of this condition should be determined and rectified immediately. **DO NOT LET THE PUMP CYCLE OR RUN IF AN OVERLOAD CONDITION OCCURS !**

C-4.2-2) Single Phase (Standard) - The type of in-winding overload protector used is referred to as an inherent overheating protector and operates on the combined effect of temperature and current. This means that the overload protector will trip out and shut the pump off if the windings become too hot, or the load current passing through them becomes too high It will then automatically reset and start the pump up after the motor cools to a safe temperature. In the event of an overload, the source of this condition should be determined and rectified immediately. **DO NOT LET THE PUMP CYCLE OR RUN IF AN OVERLOAD CONDITION OCCURS !**

If current through the temperature sensor exceeds the values listed, an intermediate control circuit relay must be used to reduce the current or the sensor will not work properly.

TEMPERATURE SENSOR ELECTRICAL RATINGS		
Volts	**Continuous Amperes**	**Inrush Amperes**
110-120	3 00	30.0
220-240	1.50	15.0
440-480	0 75	7 5
600	0.60	6.0

C-4.3) Moisture Sensors- DS Models: (Optional)
A normally open (N/O) detector is installed in the pump seal chamber which will detect any moisture present. It is recommended that this detector be connected in series to an alarm device or the motor started coil to alert the operator that a moisture detect has occurred. In the event of a moisture detect, check the individual moisture sensor probe leads for continuity, (∞ resistance = no moisture) and the junction box/control box for moisture content. The above situations may induce a false signal in the moisture detecting circuit. If none of the above tests prove conclusive, the pump(s) should be pulled and the source of the failure identified and repaired **IF A MOISTURE DETECT HAS OCCURRED SCHEDULE MAINTENANCE AS SOON AS POSSIBLE.**

C-4.4) Wire Size:
Consult a qualified electrician for proper wire size if additional power cord length is required. See table on pages 9 and 10 for electrical information

SECTION: D START-UP OPERATION

D-1) Check Voltage and Phase:
Before operating pump, compare the voltage and phase information stamped on the pump identification plate to the available power.

D-2) Check Pump Rotation:
Before putting pump into service for the first time, the motor rotation must be checked. Improper motor rotation can result in poor pump performance and can damage the motor and/or pump. To check the rotation, suspend the pump freely, momentarily apply power and observe the "kickback". "Kickback" should always be in a counter-clockwise direction as viewed from the top of the pump motor housing.

D-2.1) Incorrect Rotation for Three-Phase Pumps:
In the event that the rotation is incorrect for a three-phase installation, interchange any two power cord leads at the control box. **DO NOT** change leads in the cord housing in the motor. Recheck the "kickback" rotation again by momentarily applying power.

D-2.2) Incorrect Rotation for Single-Phase Pumps:
In the unlikely event that the rotation is incorrect for a single phase pump, contact a Barnes Pumps Service Center.

D-3) Start-Up Report:
Included at the end of this manual is a start-up report form, this form is to be completed as applicord. Return one copy to Barnes Pumps, Inc and store a copy in the control panel or with the pump manual if no control panel is used. It is important to record this data at initial start-up since it will be useful to refer to should servicing the pump be required in the future.

D-3.1) Identification Plate:
Record the numbers from the pump identification plate on both START-UP REPORT provided at the end of the manual for future reference

D-3.2) Insulation Test:
Before the pump is put into service, an insulation (megger) test should be performed on the motor. The resistance values (ohms) as well as the voltage (volts) and current (amps) should be recorded on the start-up report.

D-3.3) Pump-Down Test:
After the pump has been properly wired and lowered into the basin, sump or lift station, it is advisable to check the system by filling with liquid and allowing the pump to operate through its pumping cycle The time needed to empty the system, or pump-down time along with the volume of water, should be recorded on the start-up report.

Winding Resistance ± 5%, measured from terminal block.
Pump rated for operation at ± 10% voltage at motor

2" Pumps ONLY:
Mechanical Switch on SE51A, Cable 16/2, SJOW, 0.320 (8.1 mm) O D. Piggy-Back Plug.

Mechanical Switch on SE51AU & SE52AU, Cable 14/2, SJOW, 0.345 (8.8 mm) O.D.

OPTIONAL - Moisture Sensor cable for DS models is 18/5, SOW, 0.470 (11 9 mm) O D

OPTIONAL - Temperature Sensor cable for 3 phase models is 14/3 SOW, 0.530 (13.5 mm) O D.

OPTIONAL - Moisture & Temperature Sensor cable for 3 phase DS models is 18/5, SOW, 0.470 (11.9 mm) O.D.

FRANKLIN MOTOR:
(*) When checking winding resistance of these motors, disconnect leads to solid state switch. Once leads have been disconnected, resistance should read as follows:

(2MAINS) Yellow & Blue = 1.79 ohms
Grey & Orange = 1 79 ohms
(START WINDINGS) Red & Orange = 5.99 ohms.

G.E. MOTORS:
(*) When checking winding resistance of these motors, resistance should read as follows:

(2MAINS) White (T2) & Brown (P2) = 1 64
Orange (T3) & Yellow (T4) = 1.64
(START WINDINGS) Orange (T3) & Black (T5) = 3.05

MODEL NO	HP	VOLT/PH	Hz	RPM (Nom)	NEMA START CODE	FULL LOAD AMPS	LOCKED ROTOR AMPS	CORD SIZE	CORD TYPE	CORD O.D inch (mm)	WINDING RESISTANCE		
											Emerson Main-Start	Franklin Main-Start	G.E. Main-Start
SE51	0.5	120/1	60	1750	F	11.6	21.3	14/3	SJTOW	0 375 (9.5)			1.51 - 16.10
SE51A	0.5	120/1	60	1750	F	11.6	21.3	14/3	SJTOW	0 375 (9.5)			1.51 - 16.10
SE51AU	0.5	120/1	60	1750	F	11 6	21.3	14/3	SJTOW	0.375 (9.5)			1.51 - 16 10
SE52	0.5	240/1	60	1750	J	5.9	14.9	14/3	SOW	0.530 (13.5)	3.38 - 9.30		5 69 - 18.74
SE52AU	0.5	240/1	60	1750	J	5.9	14.9	14/3	SOW	0 530 (13.5)	3.38 - 9 30		5.69 - 18.74
SE594L	0.5	200-240/3	60	1750	H/L	3.2/3.0	9.8/11.0	14/4	SOW	0 570 (14 5)	10.20	13.00	
SE544L	0.5	480/3	60	1750	K	1.5	5.3	14/4	SOW	0.570 (14.5)	40.80	52 00	
SE554L	0.5	600/3	60	1750	H	1.0	3 4	14/4	SOW	0.570 (14 5)		77.60	89.76
SE774L	0.75	200-240/1	60	1750	G/K	7.4/7.0	21.5/25.8	14/3	SOW	0.530 (13.5)	1 86 - 10.20		2.74 - 10 56
SE794L	0.75	200-240/3	60	1750	H/K	4.8/4.5	13 7/15.4	14/4	SOW	0.570 (14 5)		5.49	6.28
SE744L	0 75	480/3	60	1750	K	2.2	7 7	14/4	SOW	0.570 (14.5)		21.96	24 51
SE754L	0 75	600/3	60	1750	L	1.5	7.2	14/4	SOW	0.570 (14.5)		34.36	36.60
SE1074L	1.0	200-240/1	60	1750	D/G	8.8/8 3	21.5/25.8	14/3	SOW	0.530 (13.5)	1.86 - 10.20		2.74 - 10 56
SE1094L	1 0	200-240/3	60	1750	E/H	5.1/4 9	13.7/15.4	14/4	SOW	0.570 (14.5)		5 49	6.28
SE1044L	1 0	480/3	60	1750	H	2.4	7.7	14/4	SOW	0 570 (14 5)		21.96	24 51
SE1054L	1 0	600/3	60	1750	J	1 9	7.2	14/4	SOW	0.570 (14 5)		34 36	36 60
SE51HT	0.5	120/1	60	1750	R	17 0	63 8	14/3	SOW	0.530 (13.5)		*	*
SE51HTA	0 5	120/1	60	1750	R	17 0	63.8	14/3	SOW	0.530 (13.5)		*	*
SE51HTAU	0 5	120/1	60	1750	R	17.0	63.8	14/3	SOW	0.530 (13 5)		*	*
SE52HT	0.5	240/1	60	1750	R	8.5	30 1	14/3	SOW	0.530 (13.5)		*	*
SE52HTAU	0.5	240/1	60	1750	R	8.5	30.1	14/3	SOW	0 530 (13.5)		*	*
3SE514L	0.5	120/1	60	1750	F	11.6	21.3	14/3	SJTOW	0 375 (9 5)			1.51 - 16.10
3SE524L	0 5	240/1	60	1750	J	5.9	14.9	14/3	SOW	0 530 (13.5)	3.38 - 9 30		5.69 - 18.74
3SE594L	0.5	200-240/3	60	1750	H/L	3.2/3.0	9 8/11.0	14/4	SOW	0 570 (14.5)	10.20	13.00	
3SE544L	0.5	480/3	60	1750	K	1.5	5.3	14/4	SOW	0.570 (14.5)	40.80	52.00	
3SE554L	0.5	600/3	60	1750	H	1.0	3 4	14/4	SOW	0.570 (14.5)		77 60	89.76
3SE774L	0.75	200-240/1	60	1750	G/K	7 4/7.0	21.5/25 8	14/3	SOW	0.530 (13.5)	1.86 - 10.20		2.74 - 10.56
3SE794L	0.75	200-240/3	60	1750	H/K	4 8/4.5	13 7/15.4	14/4	SOW	0.570 (14.5)		5.49	6 28
3SE744L	0.75	480/3	60	1750	K	2.2	7.7	14/4	SOW	0.570 (14.5)		21.96	24.51
3SE754L	0.75	600/3	60	1750	L	1.5	7.2	14/4	SOW	0 570 (14.5)		34 36	36.60
3SE1074L	1 0	200-240/1	60	1750	D/G	8 8/8.3	21 5/25.8	14/3	SOW	0.530 (13.5)	1.86 - 10.20		2.74 - 10.56
3SE1094L	1.0	200-240/3	60	1750	E/H	5 14/4.9	13.7/15.4	14/3	SOW	0.570 (14.5)		5.49	6.28
3SE1044L	1.0	480/3	60	1750	H	2.4	7.7	14/4	SOW	0.570 (14.5)		21.96	24.51
3SE1054L	1.0	600/3	60	1750	J	1.9	7.2	14/4	SOW	0 570 (14.5)		34.36	36.60
3SE514DS	0.5	120/1	60	1750	F	11.6	21 3	14/3	SJTOW	0.375 (9 5)			1.51 - 16.10
3SE524DS	0 5	240/1	60	1750	J	5.9	14.9	14/3	SOW	0.530 (13.5)	3.38 - 9.30		5.69 - 18.74
3SE594DS	0 5	200-240/3	60	1750	H/L	3 2/3.0	9.8/11.0	14/4	SOW	0.570 (14.5)	10.20	13 00	
3SE544DS	0.5	480/3	60	1750	K	1.5	5.3	14/4	SOW	0.570 (14 5)	40.80	52.00	
3SE554DS	0.5	600/3	60	1750	H	1.0	3 4	14/4	SOW	0.570 (14.5)		77.60	89.76
3SE774DS	0 75	200-240/1	60	1750	G/K	7.4/7.0	21 5/25.8	14/3	SOW	0.530 (13.5)	1.86 - 10.20		2.74 - 10.56
3SE794DS	0 75	200-240/3	60	1750	H/K	4 8/4.5	13 7/15.4	14/4	SOW	0 570 (14 5)		5.49	6.28
3SE744DS	0.75	480/3	60	1750	K	2.2	7 7	14/4	SOW	0.570 (14.5)		21.96	24.51
3SE754DS	0.75	600/3	60	1750	L	1.5	7.2	14/4	SOW	0.570 (14.5)		34.36	36.60
3SE1074DS	1.0	200-240/1	60	1750	D/G	8 8/8.3	21 5/25.8	14/3	SOW	0 530 (13.5)	1 86 - 10.20		2.74 - 10.56
3SE1094DS	1.0	200-240/3	60	1750	E/H	5 14/4.9	13 7/15.4	14/3	SOW	0.570 (14.5)		5 49	6.28
3SE1044DS	1.0	480/3	60	1750	H	2 4	7.7	14/4	SOW	0.570 (14.5)		21.96	24.51
3SE1054DS	1.0	600/3	60	1750	J	1.9	7.2	14/4	SOW	0.570 (14 5)		34.36	36.60

(*) See page 9

SECTION E: PREVENTATIVE MAINTENANCE

As the motor is oil filled, no lubrication or other maintenance is required, and generally Barnes Pumps will give very reliable service and can be expected to operate for years on normal sewage pumping without failing. However as with any mechanical piece of equipment a preventive maintenance program is recommended and suggested to include the following checks.

1) Inspect motor chamber for oil level and contamination and repair as required per section F-1.
2) Inspect impeller and body for excessive build-up or clogging and repair as required per section F-2.
3) Inspect motor and bearings and replace as required per section F-3.
4) Inspect seal for wear or leakage and repair as required per section F-4.

SECTION F: SERVICE AND REPAIR

NOTE: All item numbers in ( ) refer to Figures 16 thru 21

F-1) Lubrication:

Anytime the pump is removed from operation, the cooling oil in the motor housing (6) should be checked visually for oil level and contamination.

F-1.1) Checking Oil:

Motor Housing - To check oil, set unit upright. Remove pipe plug (39) from housing (6). With a flashlight, visually inspect the oil in the motor housing (6) to make sure it is clean and clear, light amber in color and free from suspended particles Milky white oil indicates the presence of water. Oil level should be just above the motor when pump is in vertical position.

F-1.2) Testing Oil:

1.) Place pump on it's side, remove pipe plug (39), from motor housing (6) and drain oil into a clean, dry container
2.) Check oil for contamination using an oil tester with a range to 30 Kilovolts breakdown.
3) If oil is found to be clean and uncontaminated (measuring above 15 KV. breakdown), refill the motor housing as per section F-1.4.
4) If oil is found to be dirty or contaminated (or measures below 15 KV. breakdown), the the pump must be carefully inspected for leaks at the shaft seal (28), cable assemblies (16) and (56 if used), square ring (27) and pipe plug (39), before refilling with oil. To locate the leak, perform a pressure test as per section F-1.3. After leak is repaired, dispose of old oil properly, and refill with new oil as per section F-1 4.

F-1.3) Pressure Test:

Pumps that have been disassembled, Motor Housing - If the pump has been disassembled, the oil should be drained before a pressure test, as described in section F-1.1 Remove pipe plug (39) from motor housing (6). Apply pipe sealant to pressure gauge assembly and tighten into hole (See Figure 4) Pressurize motor housing to 10 P.S.I. Use soap solution around the sealed areas and inspect joints for "air bubbles". If, after five minutes, the pressure is still holding constant, and no "bubbles" are observed, slowly bleed the pressure and remove the gauge assembly. Replace oil as described in section F-1.4. If the pressure does not hold, then the leak must be located and repaired.

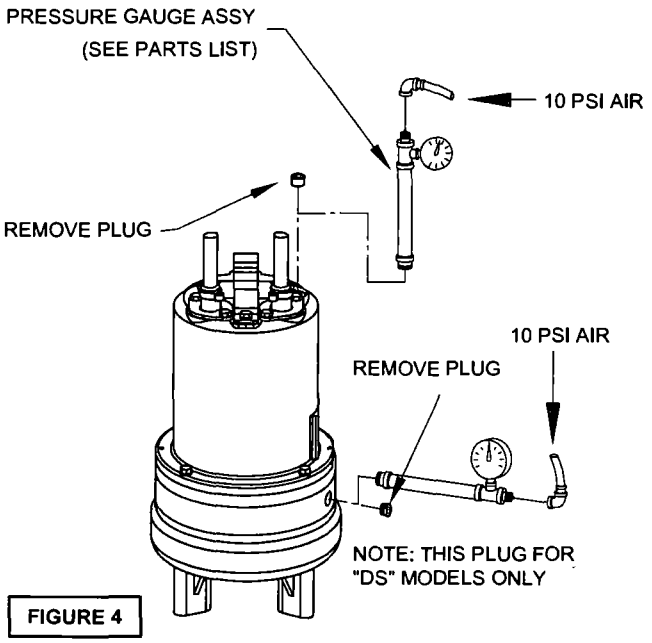

FIGURE 4

Pumps that have NOT been disassembled, Motor Housing - The pressure test may be done with the oil at its normal level. Remove pipe plug (39) from motor housing (6). Apply pipe sealant to pressure gauge assembly and tighten into hole (see Figure 4). Pressurize motor housing to 10 P S.I. Use soap solution around the sealed areas above the oil level and inspect joints for "air bubbles" For sealed areas below the oil level, leaks will seep oil

If, after five minutes, the pressure is still holding constant, and no "bubbles"/oil seepage is observed, slowly bleed the pressure and remove the gauge assembly If the pressure does not hold, then the leak must be located and repaired

Seal Chamber (DS Units Only)- Set unit on its side with fill plug (44) downward, remove plug (44) and drain all oil from seal chamber Apply pipe sealant to pressure gauge assembly and tighten into hole in outer seal plate (29). Pressurize seal chamber to 10 P.S I and check for leaks as outlined above

CAUTION ! - Pressure builds up extremely fast, increase pressure by "TAPPING" air nozzle. Too much pressure will damage seal. DO NOT exceed 10 P.S.I.

F-1.4) Replacing Oil:

Motor Housing- Set unit upright and refill with new cooling oil as per Table 1 (see parts list for amount). Fill to just above motor as an air space must remain in the top of the motor housing to compensate for oil expansion (see Fig 16, 18 or 20). Apply pipe thread compound to threads of pipe plug (39) then assemble to motor housing (6).

IMPORTANT! - For single phase units, oil level should be below capacitor.

Seal Chamber (DS Units Only)- Set unit on its side, with plug (44) upward, and refill with new oil as per Table 1 (see parts list for amount). Apply pipe thread compound to threads of pipe plug (44) and assemble to outer seal plate (29).

WARNING ! - DO NOT overfill oil. Overfilling of motor housing with oil can create excessive and dangerous hydraulic pressure which can destroy the pump and create a hazard. OVerfilling oil voids warranty.

TABLE 1 - COOLING OIL - Dielectric	
SUPPLIER	**GRADE**
BP	Enerpar SE100
Conoco	Pale Paraffin 22
Mobile	D T E Oil Light
G & G Oil	Circulating 22
Imperial Oil	Voltesso-35
Shell Canada	Transformer-10
Texaco	Diala-Oil-AX
Woco	Premium 100

F-2) Impeller and Volute Service:

F-2.1) Disassembly and Inspection:

To clean out volute (1) or replace impeller (33), disconnect power, remove hex bolts (26), and lockwashers (12), vertically lift motor and seal plate assembly from volute (1) see Figure 5 Clean out body if necessary. Clean and examine impeller (33), for pitting or wear and replace if required, inspect gasket (36) and replace if cut or damaged. If the impeller (33) needs replacing, place a flat screwdriver in the slot of the end of the shaft to hold the shaft stationary while unscrewing the impeller (33).

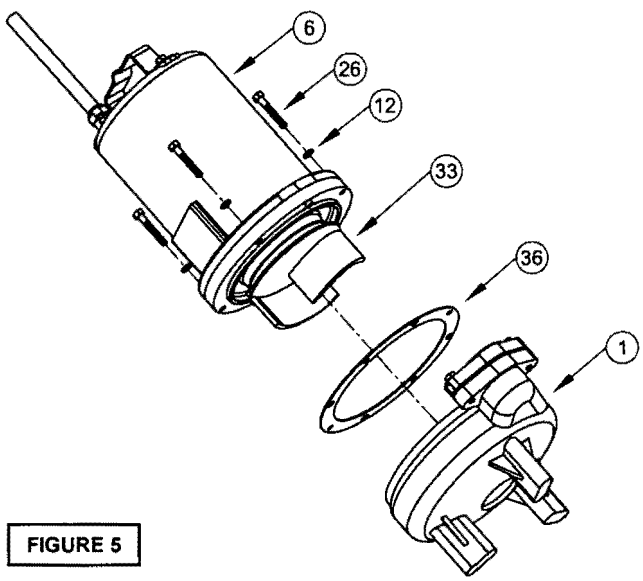

FIGURE 5

F-2.2) Reassembly:

To install impeller (33), clean the threads with thread locking compound cleaner. Apply removable Loctite® 609 or equivalent to shaft threads. Screw impeller onto the shaft hand tight while using a screwdriver in the slot at the end of the shaft to hold it stationary.

It is important that the spring of the lower shaft seal (28) seats in the hub of the impeller (33). Rotate impeller to check for binding. Position gasket (36) on volute flange and position impeller and motor housing on volute (1). Position lockwasher (12) on cap screw (26) and screw into volute (1). Torque to 100 in-lbs Check for free rotation of motor and impeller.

F-3) Shaft Seal Service:

CAUTION ! - Handle seal parts with extreme care. DO NOT scratch or mar lapped surfaces.

F-3.1) Disassembly and Inspection:

Outer Seal (All Units) - To expose shaft seal (28) for examination, disassemble volute and impeller as outlined in paragraph F-2.1. If further repair is required, remove retaining ring (28d), spring (28c) and rotating member (28b) from shaft (see Figure 6 & 7). Examine all seal parts and especially contact faces Inspect seal for signs of wear such as uneven wear pattern on stationary members, chips and scratches on either seal face **DO NOT** interchange seal components, replace the entire shaft seal (28). If replacing seal, remove stationary (28a) by prying out with flat screwdriver

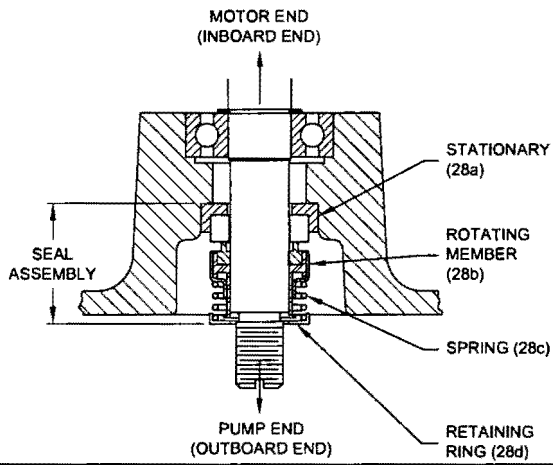

FIGURE 6 - SINGLE SEAL

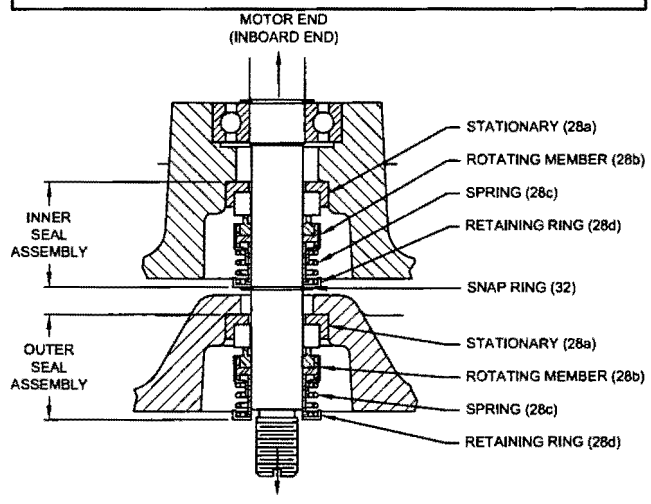

FIGURE 6 - DOUBLE SEAL

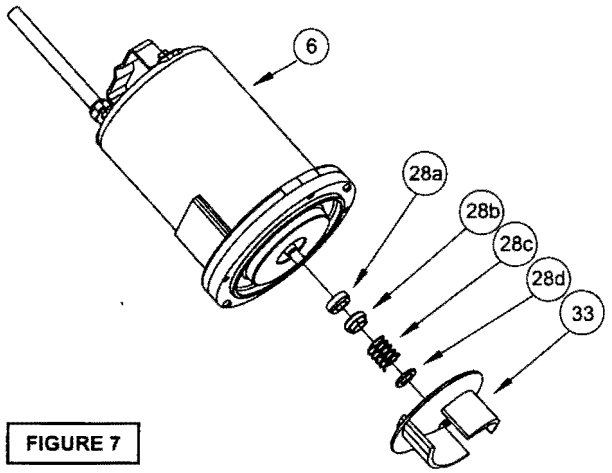

FIGURE 7

Inner Seal (DS Units Only)- To expose inner shaft seal (28) for examination, remove outer seal as outlined above. Remove socket head cap screws (64) Lift outer seal plate (29) and square-ring (27) from inner seal plate (5) see Figure 8 If further repair is required, remove snap ring (32), retaining ring (28d), spring (28c) and rotating member (28b) from shaft. Examine as outlined in outer seal paragraph. If replacing seal, remove stationary (28a) by prying out with flat screwdriver.

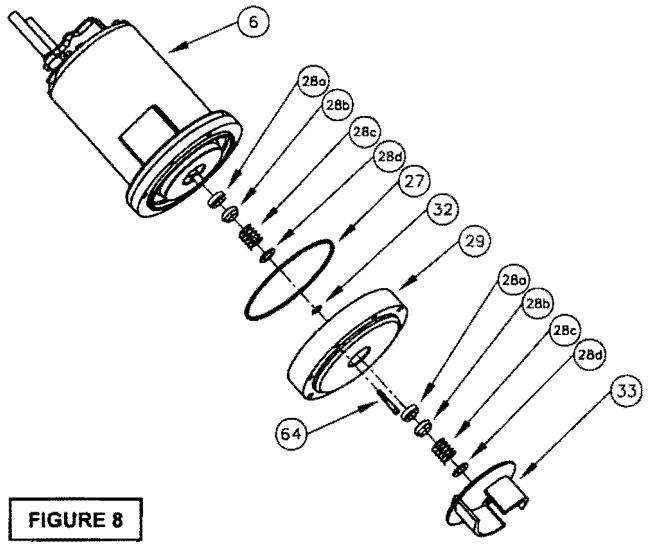

FIGURE 8

F-3.2) Reassembly:

Inner Seal (DS Units Only)- Clean and oil seal cavities in seal plates (5, 29). Lightly oil **(DO NOT use grease)** outer surface of stationary member (28a). Press stationary member (28a) firmly into inner seal plate (5), using a seal pusher (see parts list - seal tool kit) Nothing but the seal pusher is to come in contact with seal face (see Fig 9).

IMPORTANT! - DO NOT hammer on the seal pusher- it will damage the seal face.

Make sure the stationary member is in straight. Slide a bullet (see parts list - seal tool kit) over motor shaft. Lightly oil **(DO NOT use grease)** shaft, bullet and inner surface of bellows on rotating member (28b) see Figure 10 With lapped surface of rotating member (28b) facing inward toward stationary member, slide rotating member over bullet and onto shaft, using seal pusher, until lapped faces of (28a) and (28b) are together (see Figure 9).

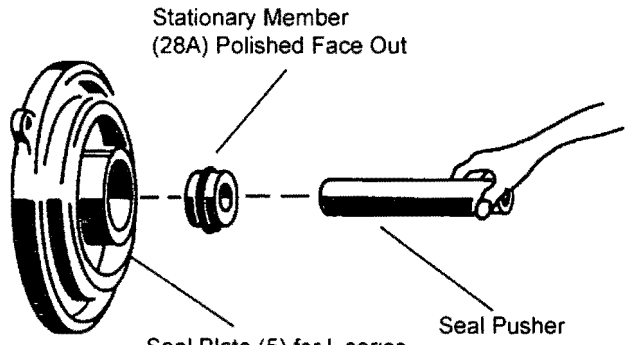

FIGURE 9

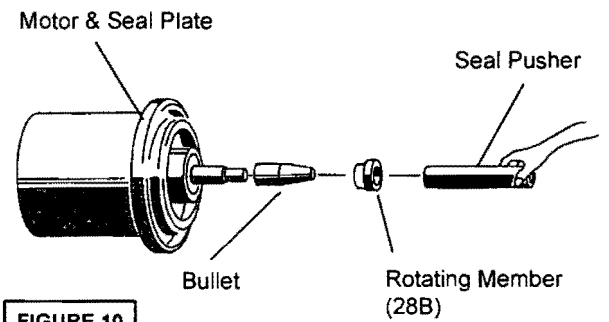

FIGURE 10

It is extremely important to keep seal faces clean during assembly. Dirt particles lodged between these faces will cause the seal to leak Place spring (28c) over shaft and in place on rotating member (28b), making sure it is seated on retainer and not cocked or resting on bellows tail. Slide retaining ring (28d) over shaft and let rest on spring (28c). Replace snap ring (32) in groove of shaft. Set square-ring (27) in groove on outer seal plate (29) and place outer seal plate (29) onto inner seal plate (5). Replace socket head cap screws (64) and torque to 60 in-lbs

Outer Seal (All Units)- Press stationary member (28a) firmly into outer seal plate (5, or 29 on DS Units) as described above. Slide rotating member (28b) onto stationary member using seal pusher as described above. Place spring (28c) and retaining ring (28d) onto rotating member (28b). Assemble impeller and volute as outlined in paragraph F-2.2. Replace oil as outlined in paragraph F-1.4.

F-4) Motor and Bearing Service

F-4.1) Disassembly and Inspection:

To examine or replace the motor (7), capacitor (9, single phase units), controls (55, 56, optional), and bearing (25), drain oil from motor as outlined in paragraph F-1.1. Disassemble volute and impeller as outlined in paragraph F-2 1 and disassemble shaft seal as outlined in paragraph F-3 1.

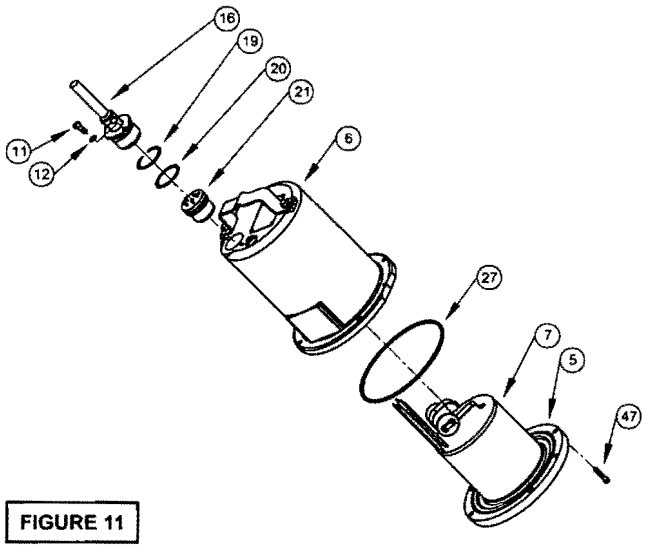

FIGURE 11

Position unit upright, using blocks to avoid resting unit on shaft. Unscrew cable hex bolts (11) and remove compression flange (16a) and power cord (16) Remove snap ring (19) with a flat head screwdriver. Pull the terminal block (21) out of the housing (6) using a T-bolt or pair of pliers and a 25-20 screw in the threads of the terminal block (21). Be sure to leave slack on the motor leads connected underneath. Use needle nose pliers to pull each female connector off of the pins on the underside of the terminal block (21) see Figure 11. The unit voltage should be noted. Repeat cable and terminal block removal procedure for any control cables (56) if equipped. Remove socket head cap screws (47). Vertically lift the motor housing (6) from seal plate (5) by lifting handle (13). Inspect square ring (27) for damage or cuts. Remove the motor bolts and lift motor stator from seal plate (5). Disconnect capacitor leads from capacitor (9, single phase units) Examine bearing (25) and replace if required If replacement is required, remove beanng (25) from motor shaft using a wheel puller or arbor press, see Figure 12

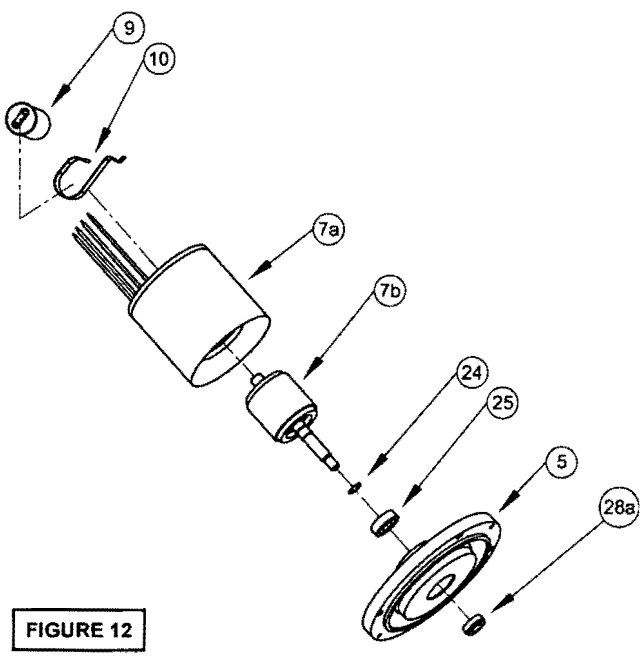

FIGURE 12

Check motor capacitor (9, single phase units) with an Ohm meter by first grounding the capacitor by placing a screwdriver across both terminals and then removing screwdriver. Connect Ohm meter (set on high scale) to terminals. If needle moves to infinity (∞) then drifts back, the capacitor is good. If needle does not move or moves to infinity (∞) and does not drift back, replace capacitor (9). To test the float switch (55 or 56 optional), check for continuity between the pin receptacles of the cord with the float in an "up" position. There should be no continuity with the switch in the "down" position. Replace switch (55 or 56) if malfunctioning. If moisture sensors (4, optional) are damaged, disconnect leads by removing machine screws (45) and washers (46) from probes (4). Remove probes (4) from seal plate (5). To test the temperature sensor (50, optional), check for continuity between the black and white wires If found to be defective, contact a motor service station or Barnes Pumps Service department Inspect motor winding for shorts and check resistance values Check rotor for wear. If rotor or the stator windings are defective, the complete motor must be replaced.

IMPORTANT! - All parts must be clean before reassembly.

F-4.2) Reassembly:

Moisture Sensors, DS Models - If pump is equipped with optional moisture sensors, reassemble by applying thread compound to threads on probes (4) and install in upper seal plate (5), see Figure 20 & 21. Connect wire assemblies (53) to probes (4) with washers (46) and machine screws (45).

Thermal Sensors - If pump is equipped with optional thermal sensors, use terminal connectors (52) to connect wire assemblies (51) to sensor leads. If sensor is not functioning, contact factory approved Service Center or Contact factory Service Department.

Bearings - When replacing bearing, be careful not to damage the rotor or shaft threads. Clean the shaft thoroughly. Press bearing (25) on the motor shaft, position squarely onto the shaft applying force to the inner race of the bearing only, until bearing seats against the retaining ring (24).

Motor - Slide lower bearing (25) and motor shaft squarely into the seal plate (5) until bearing seats on the bottom. Place stator over rotor, lining up motor bolts with holes in seal plate (5). Position capacitor (9, single phase units) so that it will lay on the opposite side of the cable entry bosses of the motor housing (6). Reconnect capacitor leads. Torque motor tie bolts to 17 in-lbs. Set square ring (27) in grove on seal plate (5).

F-4.3) Wiring Connections:

Check power cables (16) and control cable (56, if used), for cracks or damage and replace if required (see Figure 14) Make internal wiring connections which are independent of the terminal block as shown, using connectors (48) and wire assemblies (49) and (63) as required. Do not use wire nuts. Slip motor leads and groud wire through fiberglass sleeve. Lower motor housing (6) down onto seal plate (5) while aligning holes and stringing motor leads through the cable entry bore(s). (Slipping cords inside a 1 ft length of .5" conduit makes this easier). Place socket head cap screws (47) through seal plate (5) into motor housing (6) and torque to 60 in-lbs.

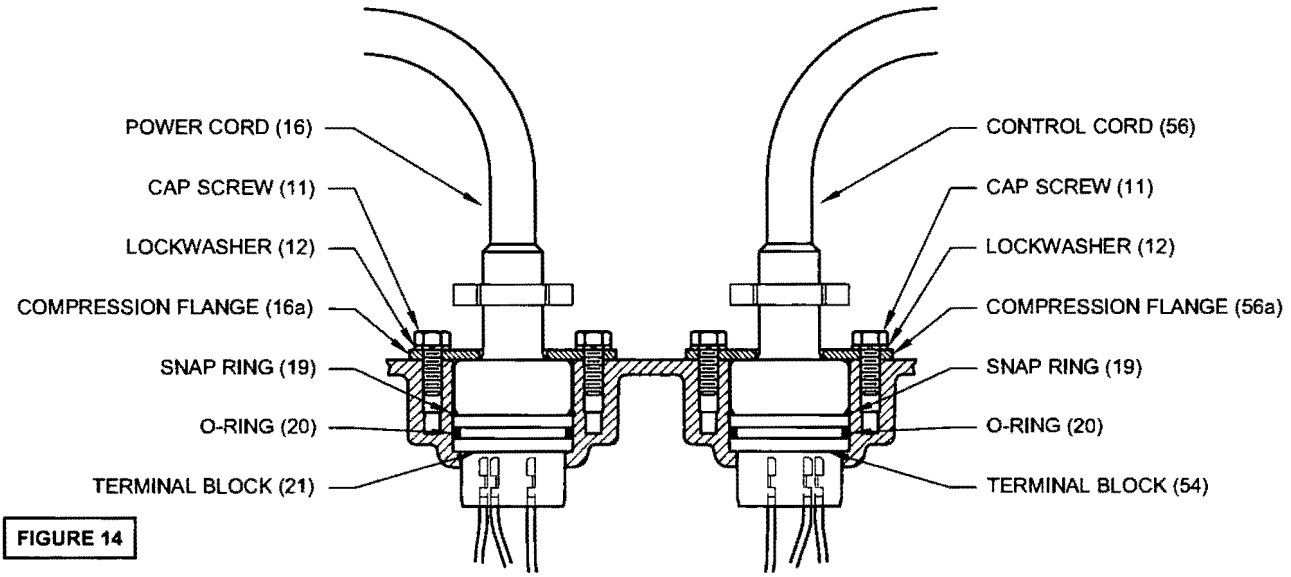

FIGURE 14

Reconnect motor and optional control leads to the underside of the terminal block(s) (21), (54 optional) as shown in Figure 13 Note that the pins are numbered underneath the terminal block. Place o-ring (20) into groove in terminal block and lubricate with dielectric oil. Press the terminal block (21) into the housing so it seats completely below the snap ring groove Place snap ring (19) into groove in cable entry bore of housing. Repeat terminal block installation for control cable, if equipped.

F-4.4) Cable Assemblies:
Power/Control Cable- Refill the cooling oil as outlined in paragraph F-1.3. Make wire connections as outlined in paragraph F-4.3. Insert female end of cable plug into housing bore aligning timing mark with hole in terminal block (21) see Figure 15 Compress cable plug with compression flange (16a) by tightening hex bolts (11) into the housing (6) Torque to 132 in-lbs.

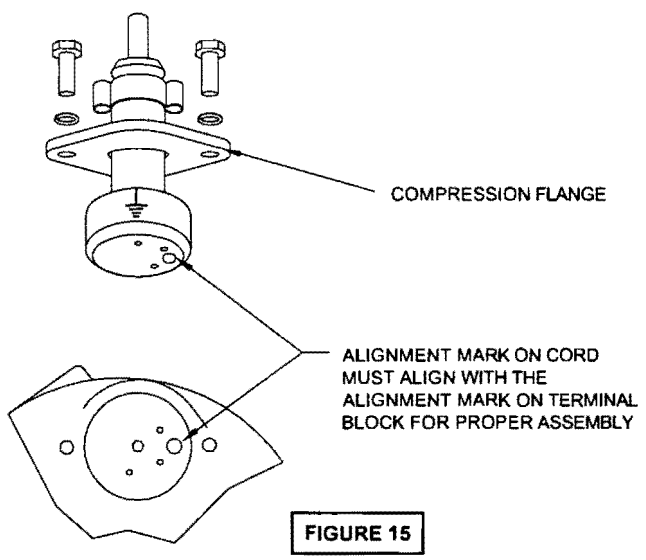

FIGURE 15

SECTION: G REPLACEMENT PARTS

G-1 ORDERING REPLACEMENT PARTS:
When ordering replacement parts, ALWAYS furnish the following information.
1. Pump serial number and date code. (Paragraph G-4)
2. Pump model number. (Paragraph G-3)
3. Pump part number. (Paragraph G-2)
4. Part description
5. Item part number.
6. Quantity required.
7. Shipping instructions.
8. Billing Instructions.

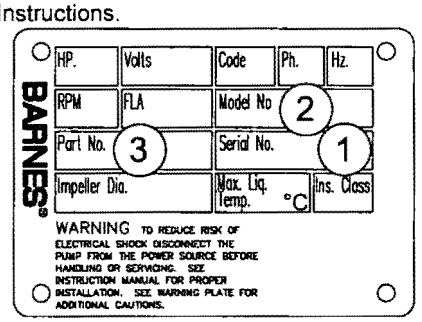

G-2 PART NUMBER:
The part number consists of a six (6) digit number, which appears in the catalog. A one or two letter suffix may follow this number to designate the design configuration. This number is used for ordering and obtaining information.

G-3 MODEL NUMBER:
This designation consists of numbers and letters which represent the discharge size, series, horsepower, motor phase and voltage, speed and pump design. This number is used for ordering and obtaining information.

G-4 SERIAL NUMBER:
The serial number block will consist of a six digit number, which is specific to each pump and may be preceded by a alpha character, which indicates the plant location. This number will also be suffixed with a four digit number, which indicates the date the unit was built (Date Code).
EXAMPLE: A012345 0490.

Reference the six digit portion (Serial Number) of this number when referring to the product.

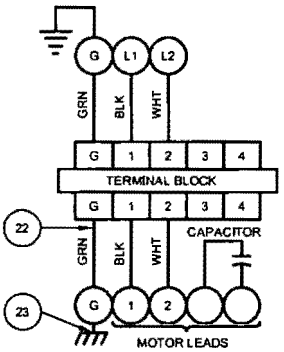

STANDARD TEMPERATURE
SINGLE PHASE - 120/240 VOLT AC (PSC)

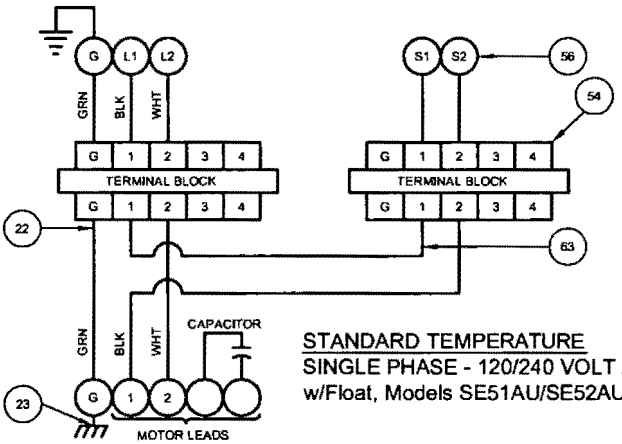

STANDARD TEMPERATURE
SINGLE PHASE - 120/240 VOLT AC (PSC)
w/Float, Models SE51AU/SE52AU

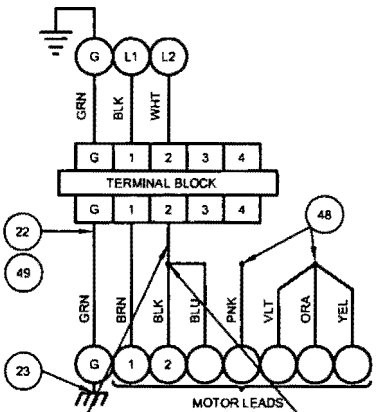

HIGH TEMPERATURE
SINGLE PHASE - 120 VOLT AC (SPLIT PHASE)
(FRANKLIN)

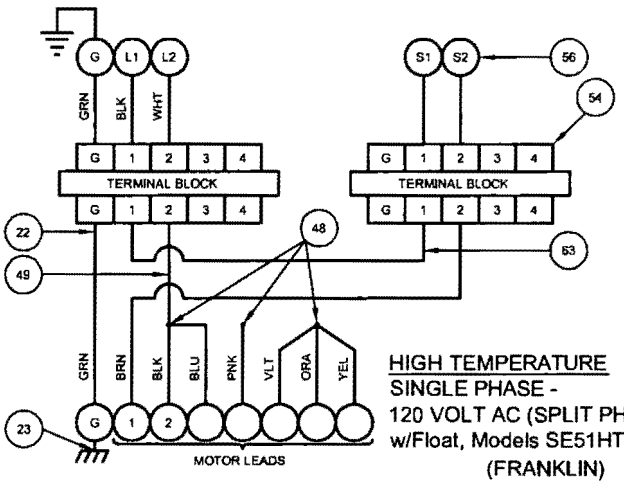

HIGH TEMPERATURE
SINGLE PHASE -
120 VOLT AC (SPLIT PHASE)
w/Float, Models SE51HTAU
(FRANKLIN)

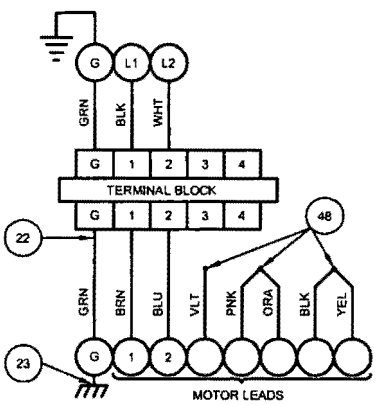

HIGH TEMPERATURE
SINGLE PHASE - 240 VOLT AC (SPLIT PHASE)
(FRANKLIN)

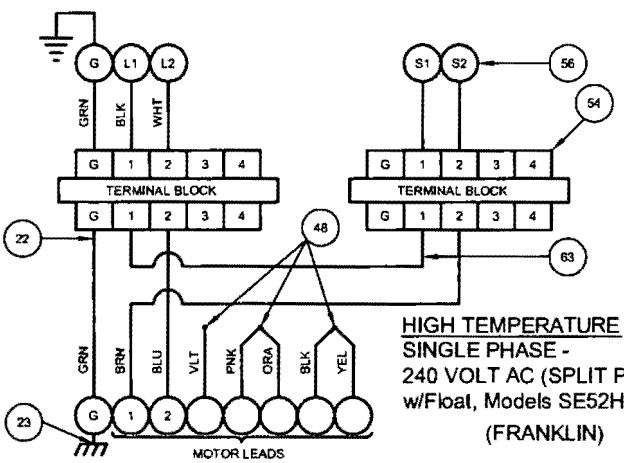

HIGH TEMPERATURE
SINGLE PHASE -
240 VOLT AC (SPLIT PHASE)
w/Float, Models SE52HTAU
(FRANKLIN)

FIGURE 13

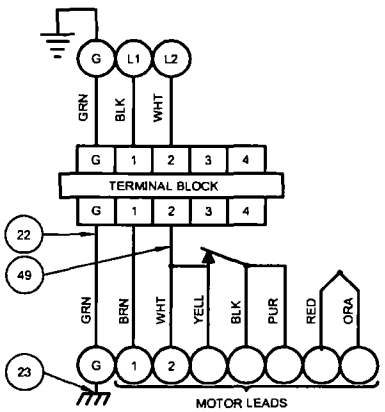

HIGH TEMPERATURE
SINGLE PHASE - 120 VOLT AC (SPLIT PHASE)
(G.E. MOTOR)

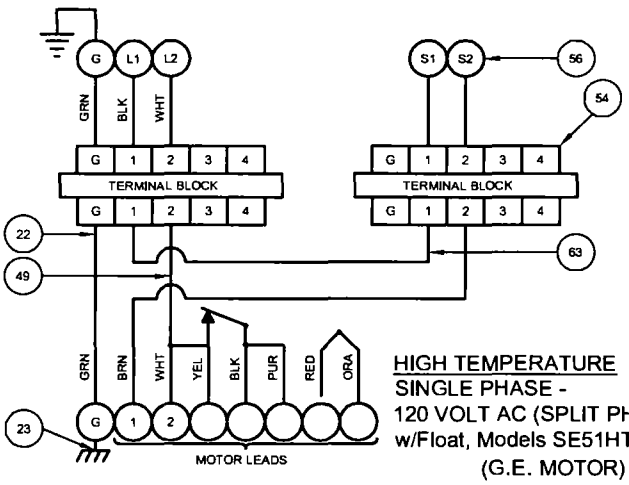

HIGH TEMPERATURE
SINGLE PHASE -
120 VOLT AC (SPLIT PHASE)
w/Float, Models SE51HTAU
(G.E. MOTOR)

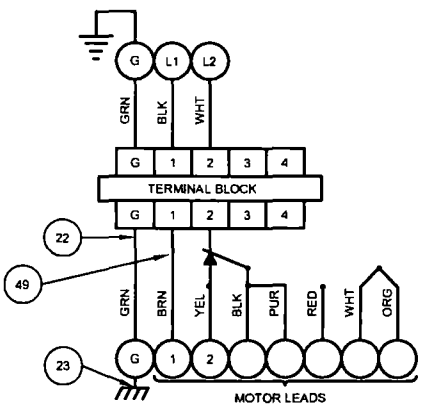

HIGH TEMPERATURE
SINGLE PHASE - 240 VOLT AC (SPLIT PHASE)
(G.E.MOTOR)

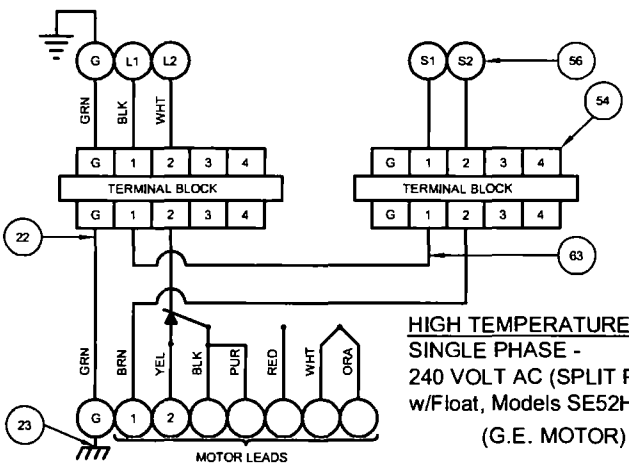

HIGH TEMPERATURE
SINGLE PHASE -
240 VOLT AC (SPLIT PHASE)
w/Float, Models SE52HTAU
(G.E. MOTOR)

FIGURE 13

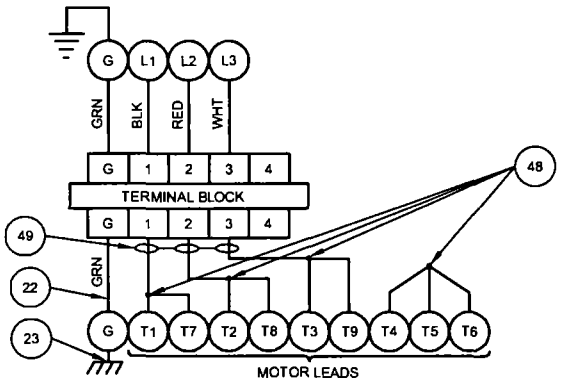

THREE PHASE - 200/240 VOLT AC

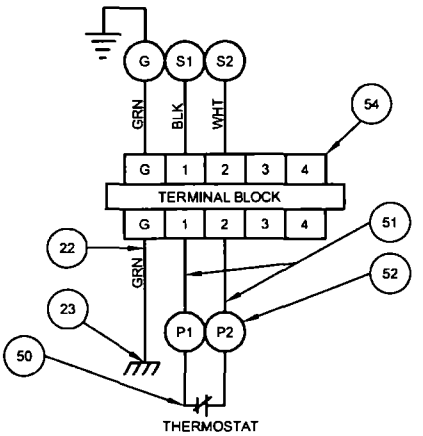

TEMPERATURE SENSORS:
Three Phase (Optional)

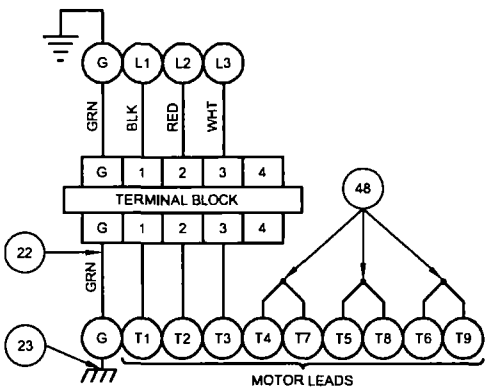

THREE PHASE - 480 VOLT AC

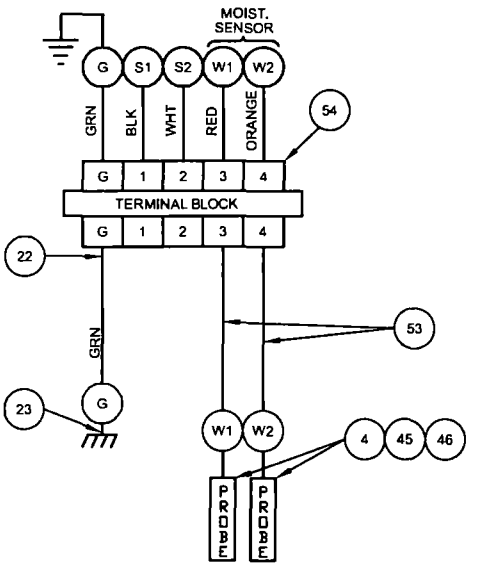

MOISTURE SENSORS
DS MODELS (Optional)

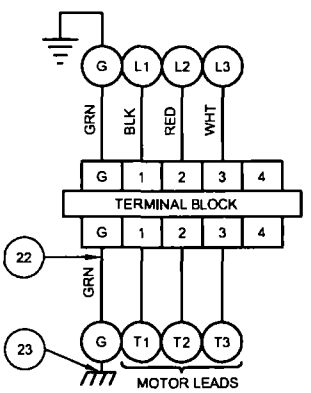

THREE PHASE - 600 VOLT AC

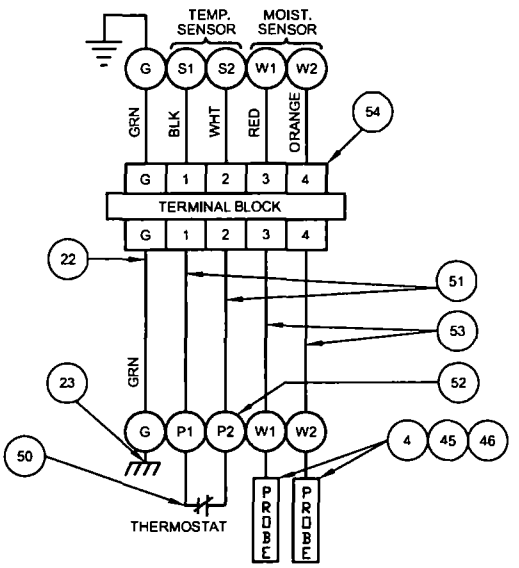

MOISTURE AND TEMPERATURE SENORS:
Three Phase DS Models (Optional)

FIGURE 13 - CONTIUED

TROUBLE SHOOTING

CAUTION ! Always disconnect the pump from the electrical power source before handling
If the system fails to operate properly, carefully read instructions and perform maintenance recommendations.
If operating problems persist, the following chart may be of assistance in identifying and correcting them:
MATCH "CAUSE" NUMBER WITH CORRELATING "CORRECTION" NUMBER.

NOTE: Not all problems and corrections will apply to each pump model.

PROBLEM	CAUSE	CORRECTION
Pump will not run	**1.** Poor electrical connection, blown fuse, tripped breaker or other interruption of power, improper power supply. **2.** Motor or switch inoperative (to isolate cause, go to manual operation of pump). **2a.** Flaot movement restricted 2b. Switch will not activate pump or is defective. **3.** Insufficient liquid level	1 Check all electrical connections for security. Have electrician measure current in motor leads, if current is within ±20% of locked rotor Amps, impeller is probably locked. If current is 0, overload may be tripped Remove power, allow pump to cool, then recheck current. 2a Reposition pump or clean basin as required to provide adequate clearance for float 2b. Disconnect level control. Set ohmmeter for a low range, such as 100 ohms full scale and connect to level control leads. Actuate level control manually and check to see that ohmmeter shows zero ohms for closed switch and full scale for open switch. (Float Switch). 3 Make sure liquid level is at least equal to suggested turn-on point. 4. Recheck all sizing calculations to determine proper pump size. 5. Check discharge line for restrictions, including ice if line passes through or into cold areas 6 Remove and examine check valve for proper installation and freedom of operation. 7. Open valve 8. Check cutter for freedom of operation, security and condition. Clean cutter and inlet of any obstruction. 9. Loosen union slightly to allow trapped air to escape.Verify that turn-off level of switch is set so that the suction is always flooded. Clean vent hole 10. Remove & examine for damage. Replace pump stator if required. 11. Repair fixtures as required to eliminate leakage. 12. Check pump temperature limits & fluid temperature. 13. Replace portion of discharge pipe with flexible connector 14. Turn to automatic position. 15. Check for leaks around basin inlet and outlets.
Pump will not turn off	2a. Float movement restricted. 2b Switch will not activate pump or is defective. 4. Excessive inflow or pump not properly sized for application. 9. Pump may be airlocked. 14. H-O-A switch on panel is in "HAND" position	
Pump hums but does not run	1. Incorrect voltage 8. Cutter jammed or loose on shaft, worn or damaged, inlet plugged.	
Pump delivers insufficient capacity	1. Incorrect voltage 4. Excessive inflow or pump not properly sized for application. 5 Discharge restricted. 6 Check valve stuck closed or installed backwards. 7 Shut-off valve closed. 8 Cutter jammed or loose on shaft, worn or damaged, inlet plugged. 9. Pump may be airlocked. 10. Pump stator damaged/torn.	
Pump cycles too frequently or runs periodically when fixtures are not in use	6. Check valve stuck closed or installed backwards. 11 Fixtures are leaking 15 Ground water entering basin	
Pump shuts off and turns on independent of switch, (trips thermal overload protector). **CAUTION!** Pump may start unexpectedly Disconnect power supply.	1 Incorrect voltage. 4 Excessive inflow or pump not properly sized for application 8. Cutter jammed, loose on shaft, worn or damaged, inlet plugged 12. Excessive water temperature.	
Pump operates noisily or vibrates excessively	4. Operating at too high a pressure. 5. Discharge restricted. 8. Cutter broken 13. Piping attachments to buiding structure too rigid or too loose.	

SE- L & 3SE- L Series, Single Seal

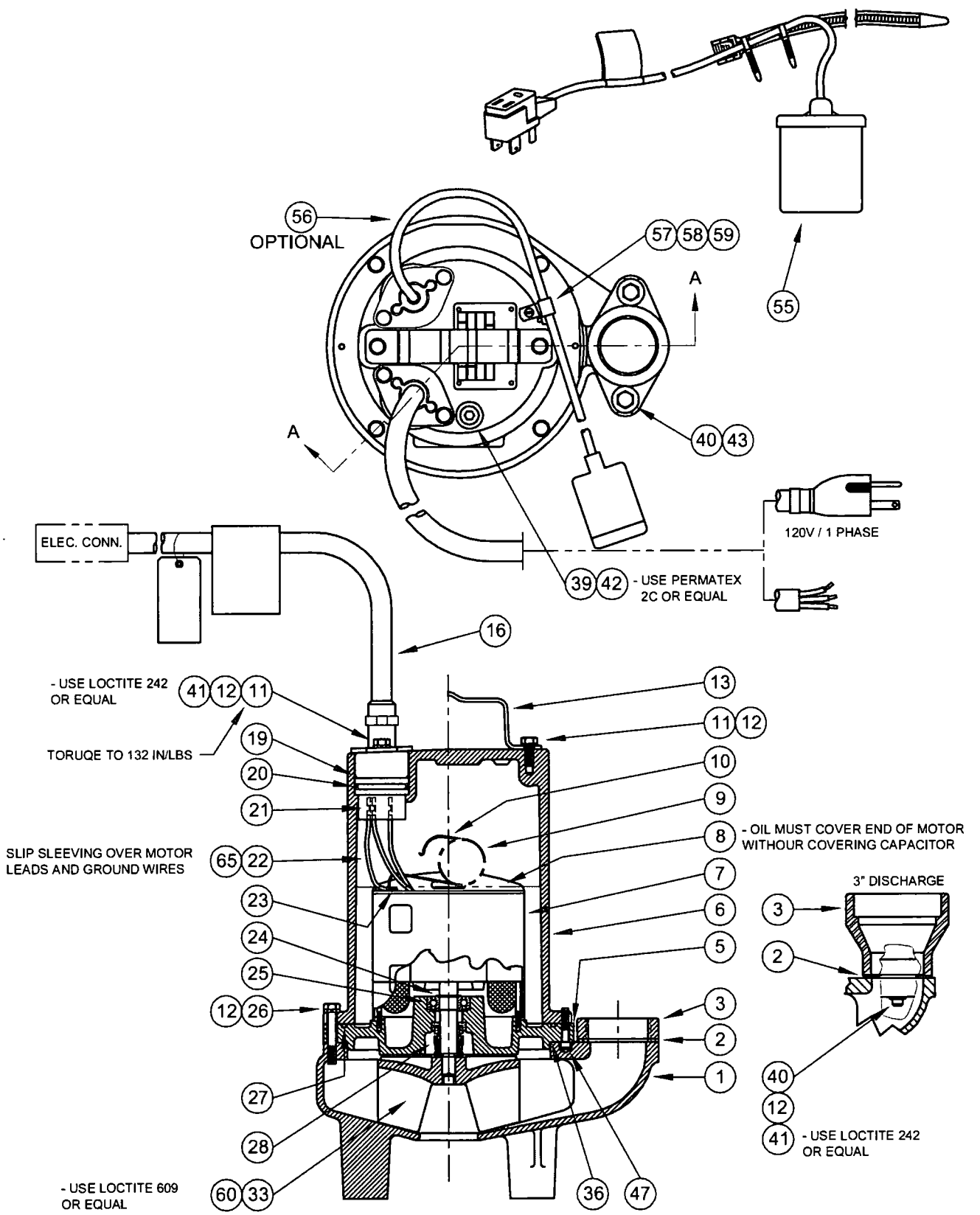

FIGURE 16

SE- L & 3SE- L Series, Single Seal

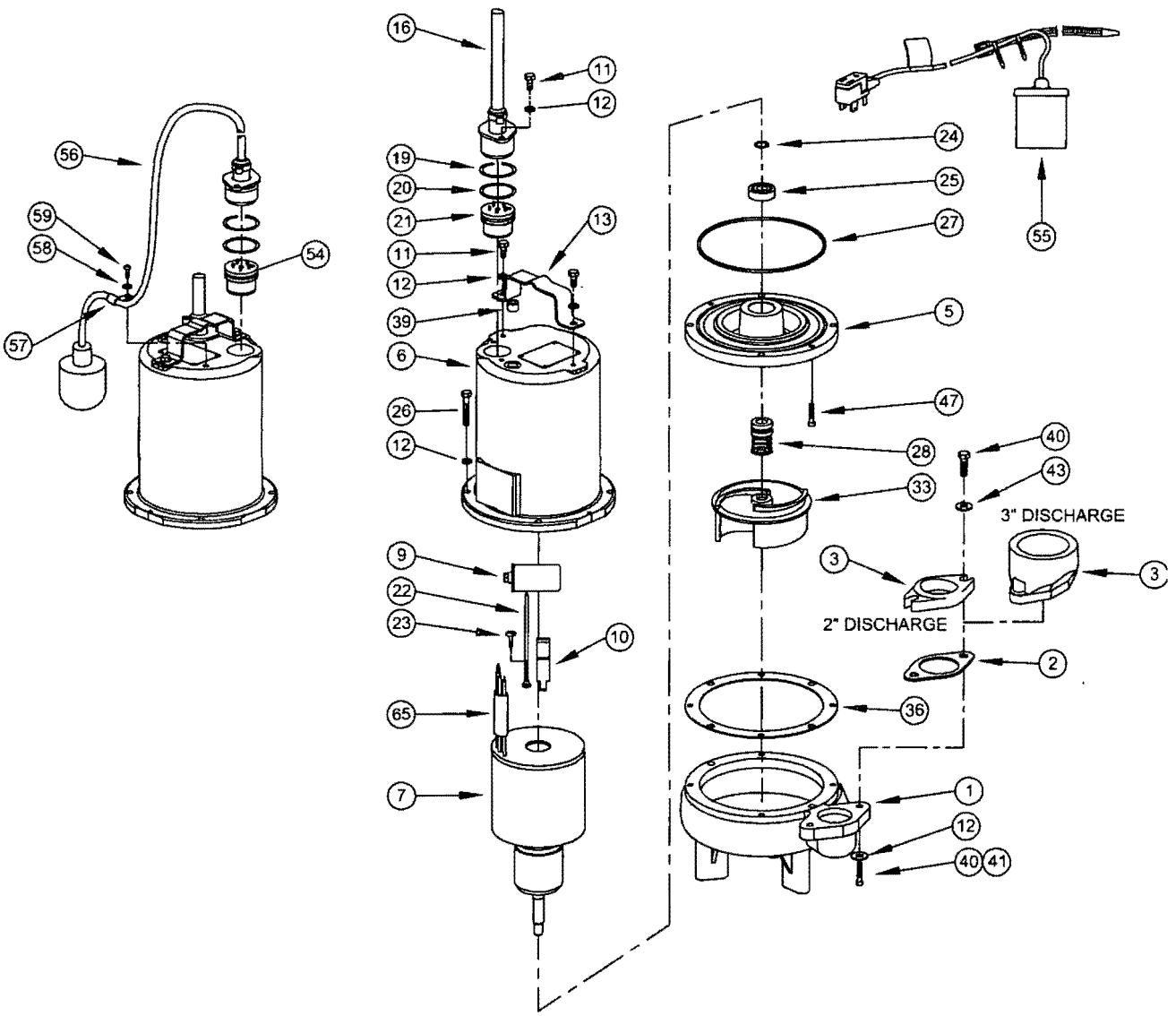

FIGURE 17

SE-HT (High Temp) Series - Single Seal

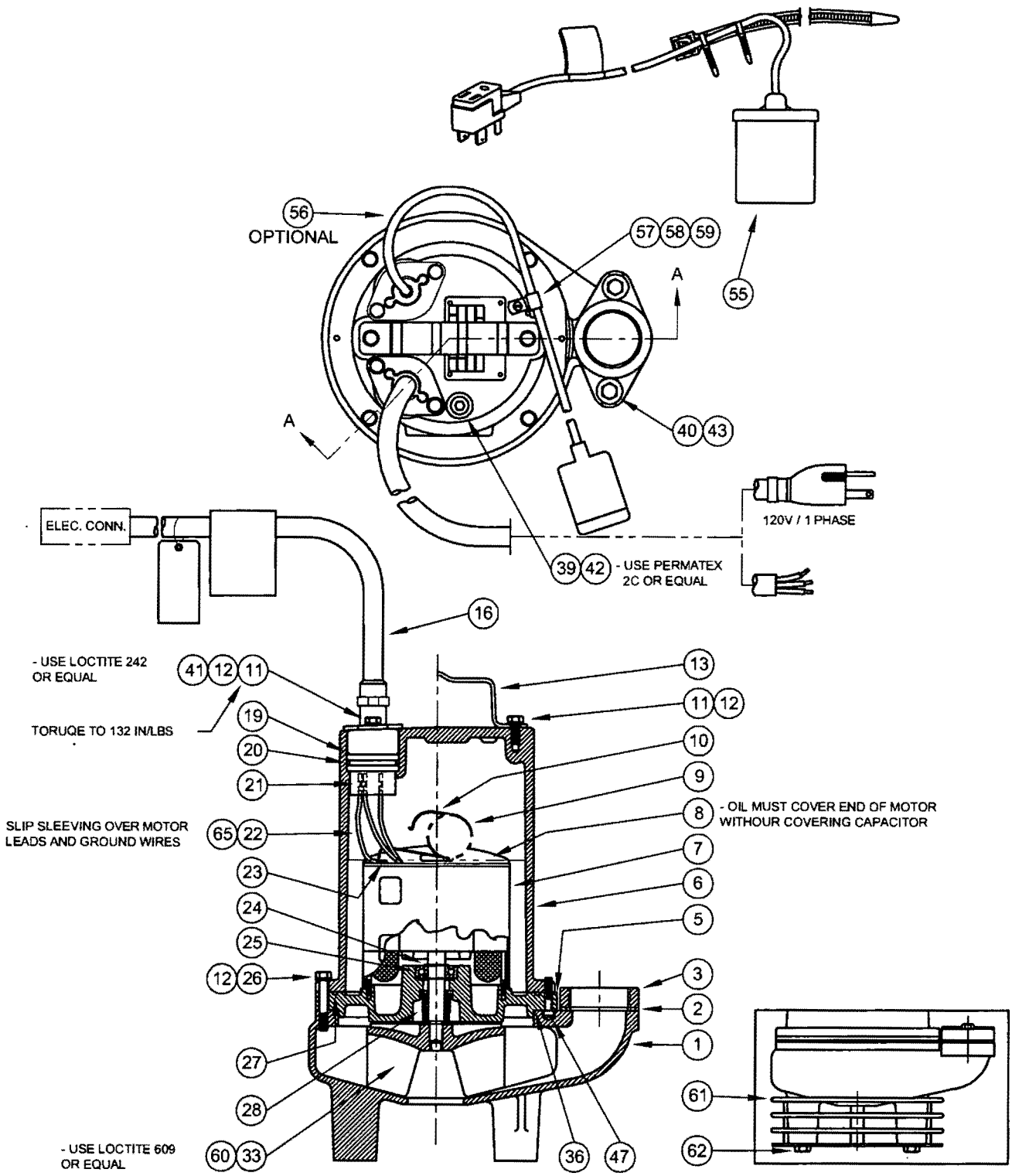

FIGURE 18

SE-HT (High Temp) Series - Single Seal

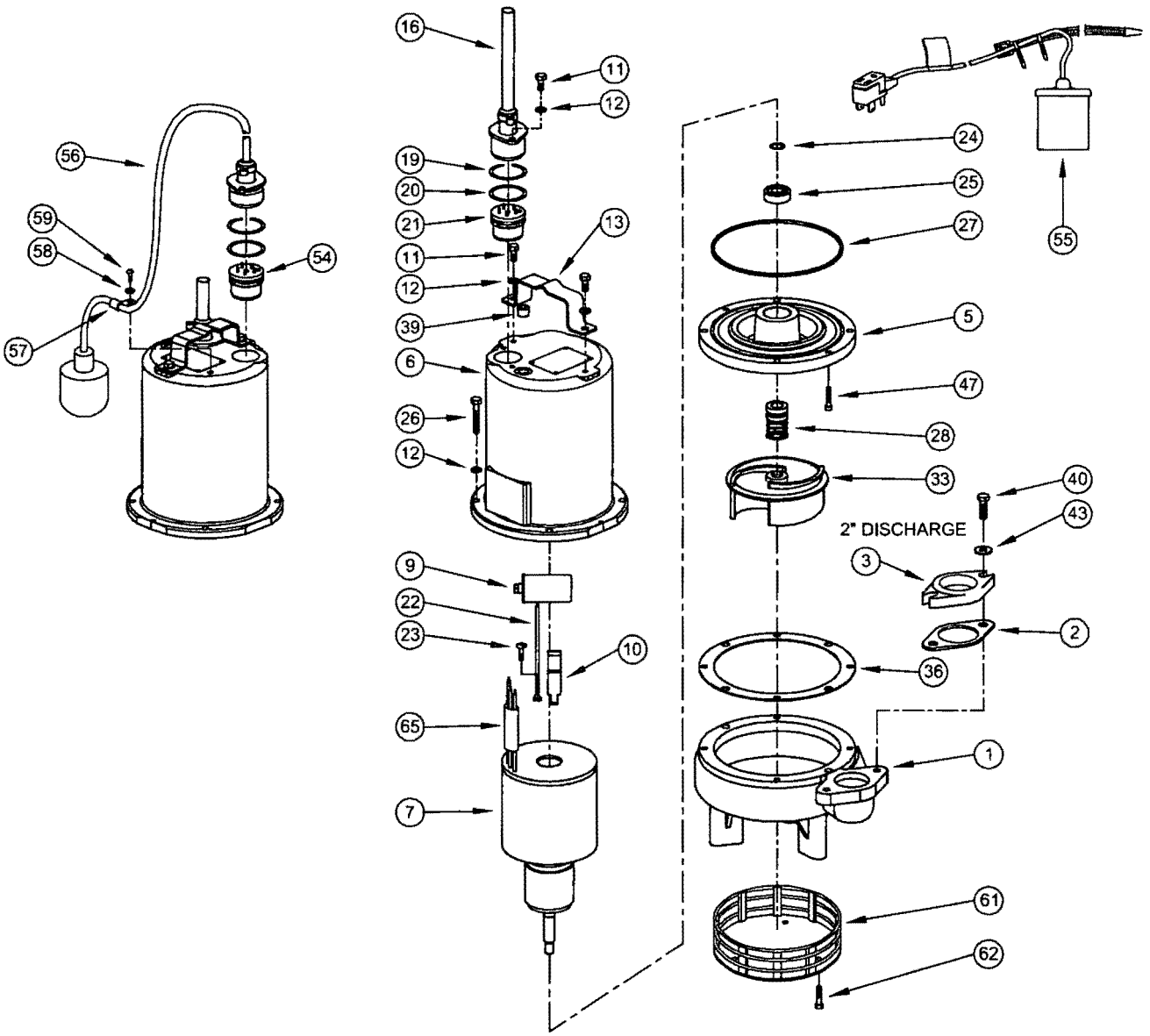

FIGURE 19

3SE-DS Series - Double Seal

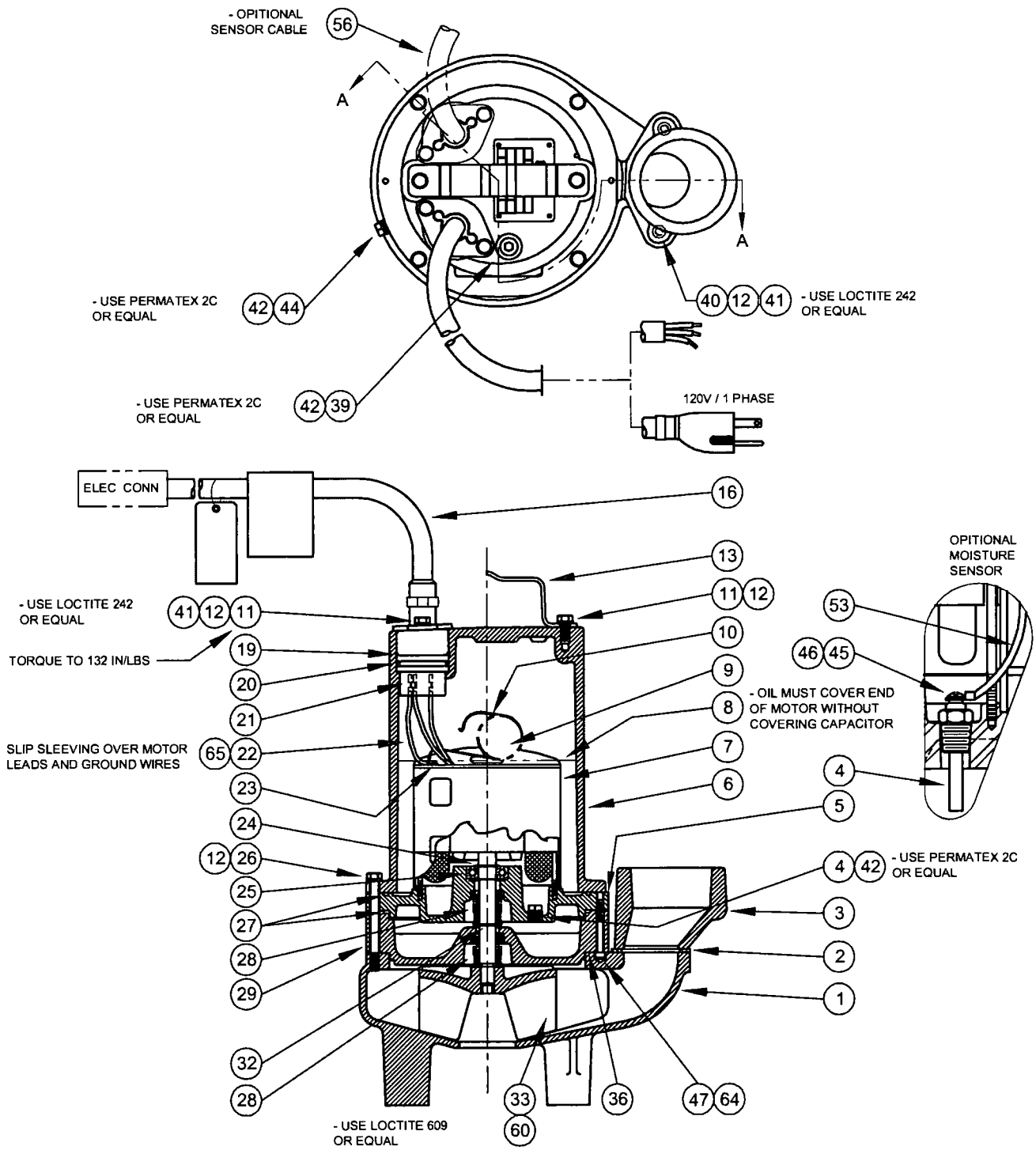

FIGURE 20

3SE-DS Series - Double Seal

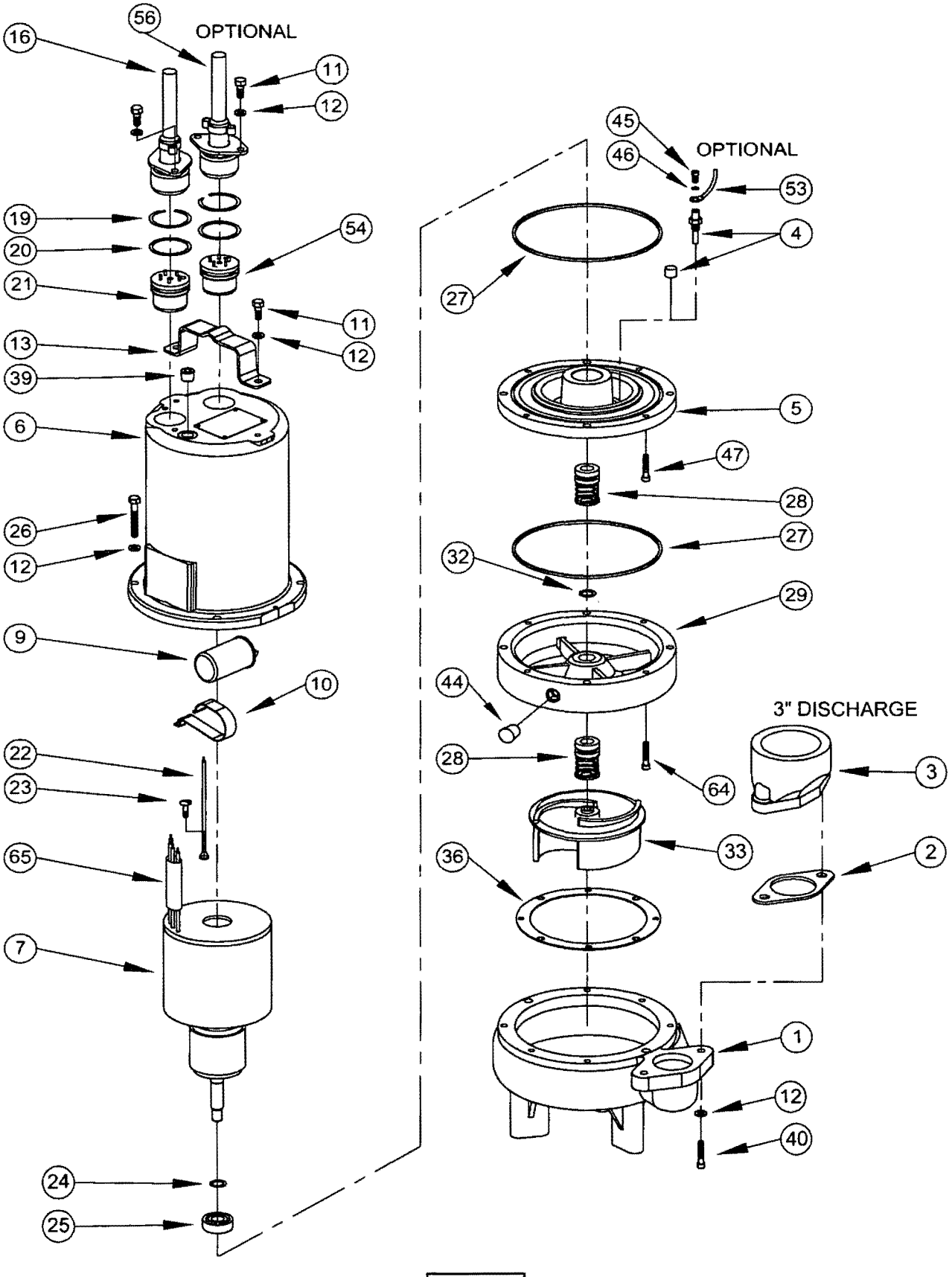

FIGURE 21

PARTS KITS

Seal Repair Kits:

Single Seal .....P/N - 107272 (†) 2, 27, 28, 36

Double Seal .....P/N - 107273 (◊) 2, 27, 28, 32, 36

Overhaul Kits:

Single Seal .....P/N - 111521 (♦) 2, 19, 20, 24, 25, 27, 28, 36, 49, 65

Double Seal .....P/N - 111522 (+) 2, 19, 20, 24, 25, 27, 28, 32, 36, 44, 49, 65

Seal Tool Kit .....P/N - 107271

Pressure Gauge Kit .....P/N - 085343

PARTS LIST

ITEM	QTY.	PART NO.		DESCRIPTION	
1	1	055400		Volute	(Std)
	1	071114		Volute	(For use with Optional Strainer)
2	1	069140	†◊♦+	Gasket	
3	1	026210		Flange	2" Discharge
		074498			3" Discharge - Single Seal
		105153			3" Discharge - Double seal
4	2	003217		Pipe Plug	All double seal (Std), .25" NPT, ZP
	2	039383		Moisture Sensor Probes	(Optional) moisture sensor
5	1	084532		Seal Plate	All single seal
		084906			All double seal
6	1	105196		Motor Housing	(Std)
		105196HA			(Optional) for all AU and HTAU, moisture and temp. sensors
7	1	**Motor:**		**Capacitor (item 9):**	
		030369BS		034964	SE51, SE51A, SE51AU, 3SE514L
		030369BD		070963	3SE514DS
		030370BS		070963	SE52, SE52AU, 3SE524L
		030370BD		070963	3SE524DS
		085472BS		None	SE51HT, SE51HTA, SE51HTAU, SE52HT, SE52HTAU
		071352BS		None	SE594L, 3SE594L, SE544L, 3SE544L
		071352BD		None	3SE594DS, 3SE544DS
		092854BS		None	SE554L, 3SE554L
		092854BD		None	3SE554DS
		029792BS		070963	SE774L, 3SE774L, SE1074L, 3SE1074L
		029792BD		070963	3SE774DS, 3SE1074DS
		071354BS		None	SE794L, SE744L, 3SE794L, 3SE744L, SE1094L,
				None	SE1044L, 3SE1094L, 3SE1044L
		071354BD		None	3SE794DS, 3SE744DS, 3SE1094DS, 3SE1044DS
		092855BS		None	SE754L, 3SE754L, SE1054L, 3SE1054L
		092855BD		None	3SE754DS, 3SE1054DS
8	96 oz	029034		Oil	All single seal
	120oz	029034		Oil	All double seal (Includes 24 oz. in Seal Chamber)
9	1	034964	*	Capacitor (30MFD)	1 Phase
	1	070963		Capacitor (20 MFD)	1 Phase
10	1	039858		Capacitor Bracket	1 Phase
11	4	1-156-1		Hex. Hd. Cap Screw	(Std), 5/16-18 x 1 00" Lg., Stainless
	6	1-156-1		Hex. Hd. Cap Screw	(Optional) for all AU and HTAU, moisture and temp. sensors
12	10	026322		Lockwasher	(Std), 5/16, Stainless
	12	026322		Lockwasher	(Optional) for all AU and HTAU, moisture and temp. sensors
13	1	103503		Handle	
16	1	See Table 2		Power Cable Set	
16a	1	103582		Compression Flange, Included with Cable Set	
19	1	105197	♦+	Snap Ring	(Std)
	2	105197		Snap Ring	(Optional) for all AU and HTAU, moisture and temp sensors
20	1	2-31051-224	♦+	O-ring	(Std)
	2	2-31051-224		O-ring	(Optional) for all AU and HTAU, moisture and temp sensors

** Units with build code date (see section G-4) before -0901 may use capacitor part number, 070963 or the 034964 part number.*

21	1	103584		Terminal Block	1 Phase
		103583			3 Phase
22	1	105111		Ground Wire Assembly	(Std)
	2	105111		Ground Wire Assembly	(Optional) for moisture and temp. sensors
23	1	016660		Screw, Self Tapping #8-32 x .375" Lg	
24	1	085326	♦✦	Retaining Ring	
25	1	017414	♦✦	Bearing	
26	4	1-135-1		Cap Screw	All single seal, 5/16-18 x 1 75" Lg , Stainless
		1-168-1		Cap Screw	All double seal, 5/16-18 x 3.50" Lg. Stainless
27	1	027269	†◊♦✦	Square Ring	All single seal
	2	027269	◊	Square Ring	All double seal
28	1		†◊♦✦	Shaft Seal - (Qty 2 for DS)	
		005080		Carbon/Ceramic/Buna-N (STD)	
		005080SB		Tungsten/Tungsten/Buna-N	
		005080SD		Silicon Carbide/Silicon Carbide/Buna-N	
		005080SF		Carbon/Ceramic/Viton	
		005080SH		Tungsten/Tungsten/Viton	
		005080SK		Silicon Carbide/Silicon Carbide/Viton	
		005080SM		Silicon Carbide/Tungsten/Buna-N	
		005080SN		Carbon/Ni-Resistant/Buna-N	
		005080SP		Carbon/Ni-Resistant/Neoprene	
		082850		Carbon/Ni-Resistant/Viton	
29	1	103587		Seal Housing	All double seal
32	1	2-27008-62	◊✦	Retaining Ring	All double seal
33	1			Impeller, Cast Iron	
		084346		6.00 Dia. (STD for 1 HP)	
		084346TA		5 88 Dia.	
		084346TB		5.75 Dia.	
		084346TC		5.63 Dia. (STD for .75 HP)	
		084346TD		5 50 Dia	
		084346TE		5.38 Dia.	
		084346TF		5 25 Dia. (STD for .5 HP)	
		084346TG		5.13 Dia.	
		084346TH		5.00 Dia.	
		084346TJ		4.88 Dia.	
		084346TK		4.75 Dia	
		084346TL		4.63 Dia.	
		084346TM		4 50 Dia.	
		084346TN		4.38 Dia.	
		084346TP		4 25 Dia.	
		084346TQ		4 13 Dia	
		084346TR		4.00 Dia	
36	1	027344	†◊♦✦	Gasket	
39	1	014270		Pipe Plug	.375" NPT
40	2	1-36-1	✦	Hex. Hd. Cap Screw	2" Discharge, 3/8-16 x 1.25" Lg , Stainless
		2-23030-59		Hex. Hd Cap Screw	3" Discharge, 5/16-18 x 1.50" Lg., Stainless
41	A/R	-----		Loctite 242	
42	A/R	-----		Permatex 2C	
43	2	082727		Washer	2" Discharge, 3/8" Stainless
44	1	003217	✦	Pipe Plug	All double seal, 25" NPT
45	2	5-32-6		Screw	(Optional) moisture sensor, #6-32 x .25" Lg., ZP
46	2	052563		Lockwasher	(Optional) moisture sensor, #6 Stl.
47	2	084948		Socket Head Cap Screw	1/4-20 x 1.25" Lg., Stainless
48	3	074449		Terminal Connector	HT Only
	4	105150		Terminal Connector	200-240V, 3Ph
	3	625-00163		Terminal Connector	480V, 3PH
49	1	105149	♦✦	Wire Assembly	120V HT
	3	105149		Wire Assembly	200-240V, 3Ph
50	1	051621		Thermal Sensor	Optional for temperature sensor (Not Shown)
51	2	105155		Wire Assembly	Optional for temperature sensor (Not Shown)
52	2	625-00163		Terminal Connector	Optional for temperature sensor (Not Shown)
53	2	105106		Wire Assembly	Optional for moisture sensor

54	1	103759		Terminal Block	All AU and HTAU
		103584			Optional for temperature sensor only
		103585			Optional for moisture and temp sensors
55	1	See Table 2		Float Switch w/Plug Piggyback	
56	1	103746		Float Switch	SE51AU, SE52AU
	1	103755		Float Switch, High Temp.	SE51HTAU, SE52HTAU
	1	See Table 2		Control Cable	Optional for moisture and/or temp. sensors
56a	1	103582		Compression Flange	Included with Cable Set
57	1	090516		Cord Clip,	(For SE51AU, SE52AU, SE51HTAU & SE52HTAU)
58	1	20-12-1		Washer,	(For SE51AU, SE52AU, SE51HTAU & SE52HTAU)
59	1	2-88-1		Screw,	(For SE51AU, SE52AU, SE51HTAU & SE52HTAU)
60	A/R	-----		Loctite 609	
61	1	082852		Inlet Strainer, Stainless	(Optional)
62	3	028913		Hex Hd, Screw, Stainless	(Optional), 3/8-16 x 875" Lg., Stainless
63	1	105147		Wire Assembly	All AU Series
64	2	030337		Socket Head Cap Screw	Double seal Only, 1/4-20 x 2 00" Lg., Stainless
65	1	625-02117	♦✦	Sleeve, Fiberglass	

TABLE 2 - POWER & SENSOR CORD SETS

CABLE LENGTH	ITEM #16 120 VOLT 1 PHASE STD. Temp	ITEM #16 120 VOLT 1 PHASE High Temp	ITEM #16 240 VOLT 1 PHASE 0.5HP STD & HT	ITEM #16 240 VOLT 1 PHASE 0 75 & 1HP STD & HT	ITEM #16 3 PHASE	ITEM #55 (OPTIONAL) STD. Temp Piggy-Back Float Switch "A" Series	ITEM #55 (OPTIONAL) High Temp. Piggy-Back Float Switch "A" Series	ITEM #56 (OPTIONAL) Temperature 3 Phase	ITEM #56 (OPTIONAL) Moisture and Temperature Sensor 3 Phase or Moisture Sensor Only
8 FT	103756A	110416A	-----	103741A	103742A	---	---	103741A	103740A
15 FT	103756	110416	110949	103741	103742	101758	090269	103741	103740
20 FT	103756XA	110416XA	110949XA	103741XA	103742XA	101758XA	090269XA	103741XA	103740XA
30 FT **(Std)**	103756XC	110416XC	110949XC	103741XC	103742XC	101758XC	090269XC	103741XC	103740XC
50 FT	103756XF	110416XF	110949XF	103741XF	103742XF	101758XF	090269XF	103741XF	103740XF
75 FT	103756XJ	110416XJ	110949XJ	103741XJ	103742XJ		090269XJ	103741XJ	103740XJ
100 FT	103756XL	110416XL	110949XL	103741XL	103742XL		090269XL	103741XL	103740XL

IMPORTANT!
WARRANTY REGISTRATION

Your product is covered by the enclosed Warranty.
Complete the Warranty Registration Form and return to
Crane Pumps & Systems, Inc. Warranty Service Group

If you have a claim under the provision of the warranty, contact your local Crane Pumps & Systems, Inc. Distributor.

RETURNED GOODS
RETURN OF MERCHANDISE REQUIRES A "RETURNED GOODS AUTHORIZATION".
CONTACT YOUR LOCAL CRANE PUMPS & SYSTEMS, INC. DISTRIBUTOR.

Products Returned Must Be Cleaned, Sanitized,
Or Decontaminated As Necessary Prior To Shipment,
To Insure That Employees Will Not Be Exposed To Health
Hazards In Handling Said Material. All Applicable Laws
And Regulations Shall Apply.

BARNES®

Limited Warranty

We warrant to our immediate customer and to the ultimate consumer that products of our manufacture will be free of defects in material and workmanship under normal use and service for the following time periods, when installed and maintained in accordance with our instructions.

Pump Products One (1) year from date of installation or (24) twenty-four months from date of shipment, whichever occurs first Cleaning Products: Twelve (12) months from date of installation or eighteen (18) months from date of shipment, whichever occurs first As used herein, "the ultimate consumer" is defined as the purchaser who first uses the product after its initial installation or, in the case of product designed for non permanent installation, the first owner who used the product. It is the purchaser's or any sub-vendee's obligation to make known to the ultimate consumer the terms and conditions of this warranty This warranty gives you specific legal rights, and there may also be other rights which vary from state to state. In the event the product is covered by the Federal Consumer Product Warranties Law (1) the duration of any implied warranties associated with the product by virtue of said law is limited to the same duration as stated herein, (2) this warranty is a LIMITED WARRANTY, and (3) no claims of any nature whatsoever shall be made against us, until the ultimate consumer, his successor, or assigns, notifies us in writing of the defect, and delivers the product and/or defective part(s) freight prepaid to our factory or nearest authorized service station. Some states do not allow limitations on how long an implied warranty lasts, so the above limitation may not apply. **THE SOLE AND EXCLUSIVE REMEDY FOR BREACH OF ANY AND ALL WARRANTIES WITH RESPECT TO ANY PRODUCT SHALL BE TO REPLACE OR REPAIR AT OUR ELECTION, F.O.B. POINT OF MANUFACTURE OR AUTHORIZED REPAIR STATION, SUCH PRODUCTS AND/OR PARTS AS PROVEN DEFECTIVE. THERE SHALL BE NO FURTHER LIABILITY, WHETHER BASED ON WARRANTY, NEGLIGENCE OR OTHERWISE.** Unless expressly stated otherwise, guarantees in the nature of performance specifications furnished in addition to the foregoing material and workmanship warranties on a product manufactured by us, if any, are subject to laboratory tests corrected for field performance. Any additional guarantees, in the nature of performance specifications must be in writing and such writing must be signed by our authorized representative. Due to inaccuracies in field testing if a conflict arises between the results of field testing conducted by or for user, and laboratory tests corrected for field performance, the latter shall control Components or accessories supplied by us but manufactured by others are warranted only to the extent of and by the terms and conditions of the original manufacturer's warranty. **RECOMMENDATIONS FOR SPECIAL APPLICATIONS OR THOSE RESULTING FROM SYSTEMS ANALYSES AND EVALUATIONS WE CONDUCT WILL BE BASED ON OUR BEST AVAILABLE EXPERIENCE AND PUBLISHED INDUSTRY INFORMATION. SUCH RECOMMENDATIONS DO NOT CONSTITUTE A WARRANTY OF SATISFACTORY PERFORMANCE AND NO SUCH WARRANTY IS GIVEN.**

This warranty shall not apply when damage is caused by (a) improper installation, (b) improper voltage (c) lightning (d) sand or other abrasive material (e) scale or corrosion build-up due to excessive chemical content. Any modification of the original equipment will also void the warranty We will not be responsible for loss, damage or labor cost due to interruption of service caused by defective parts. Neither will we accept charges incurred by others without our prior written approval. This warranty is void if our inspection reveals the product was used in a manner inconsistent with normal industry practice and\or our specific recommendations. The purchaser is responsible for communication of all necessary information regarding the application and use of the product **UNDER NO CIRCUMSTANCES WILL WE BE RESPONSIBLE FOR ANY OTHER DIRECT OR CONSEQUENTIAL DAMAGES, INCLUDING BUT NOT LIMITED TO LOST PROFITS, LOST INCOME, LABOR CHARGES, DELAYS IN PRODUCTION, IDLE PRODUCTION, WHICH DAMAGES ARE CAUSED BY ANY DEFECTS IN MATERIAL AND\OR WORKMANSHIP AND\OR DAMAGE OR DELAYS IN SHIPMENT. THIS WARRANTY IS EXPRESSLY IN LIEU OF ANY OTHER EXPRESS OR IMPLIED WARRANTY, INCLUDING ANY WARRANTY OF MERCHANTABILITY OR FITNESS FOR A PARTICULAR PURPOSE.**

No rights extended under this warranty shall be assigned to any other person, whether by operation of law or otherwise, without our prior written approval

CRANE®

A Crane Co. Company

PUMPS & SYSTEMS

420 Third Street
Piqua, Ohio 45356
Phone (937) 778-8947
Fax: (937) 773-7157
www cranepumps com

83 West Drive, Bramton
Ontano, Canada L6T 2J6
Phone: (905) 457-6223
Fax. (905) 457-2650

Notes

START-UP REPORT
FOR SUBMERSIBLE PUMPS

This form is designed to provide assurance that customer service and a quality product are the number one priority with Crane Pumps & Systems, Inc (CP&S). Please fill out the following questions as completely and accurate as possible When complete, mail this form to:

In U.S.A Send To:
Crane Pumps & Systems, Inc
Attn: Warranty Service Group
420 Third Street
Piqua, Ohio 45356

In Canada Send To:
Crane Pumps & Systems, Inc.
Attn: Service Manager
83 West Drive, Brampton
Ontario, Canada L6T 2J6

REPORTS THAT ARE NOT RETURNED CAN DELAY OR VOID WARRANTY.

Pump Owner's Name: _____
Address: _____
Location of Installation _____
Person in Charge _____ Phone _____
Purchased From (Crane Pumps & Systems Representative/Distributor _____

Pump Model _____ Serial No. _____
Part Number _____
Voltage _____ Phase _____ Hertz _____ Horespower _____
Rotation: Direction of impeller rotation (Use C/W for clockwise, CC/W for counter-clockwise) _____
Method used to check rotation (viewed from bottom) _____
Does impeller turn freely by hand: Yes _____ No _____

Condition of equipment Good _____ Fair _____ Poor _____
Condition of cable jacket Good _____ Fair _____ Poor _____
Resistance of cable jacket Good _____ Fair _____ Poor _____
Resistance of cable and pump motor (measured at pump control)
Red-Black _____ Ohms, Red-White _____ Ohms, White-Black _____ Ohms
Resistance of Ground Circuit between Control Panel and outside of pump _____ Ohms
MEG Ohms check of insulation:
Red to Ground _____ White to Ground _____ Black to Ground _____

Condition of equipment at Start-Up: Dry _____ Wet _____ Muddy _____
Was Equipment Stored? _____ Length of Storage _____
Describe station layout _____

Liquid being pumped _____
Debris in bottom of station? _____
Was debris removed in your presence? _____
Are guide rails exactly vertical? _____
Is BAF stationary installed level? _____

Liquid level controls Model _____
Are level controls installed away from turbulence? _____
Operation Check:
Tip lowest float (Stop Float), All pumps should remain off
Tip second float (and Stop Float), one pump comes On.
Tip third float (and Stop Float), both pumps on (alarm on simplex).
Tip fourth float (and Stop Float), high level alarm on (omit on simplex).

If not CP&S level controls, describe type of controls _____
Does liquid level ever drop below volute top? _____

CP&S control panel part no. and brand _____
Number of pumps operated by control panel _____
NOTE: At no time should holes be made in top of control panel, unless proper sealing devices are utilized.
Control panel manufactured by others _____
Company name _____
Model number _____
Short circuit protection _____ Type _____
Number and size of short circuit device(s) _____ Amp rating _____
Overload type _____ Size _____ Amp rating _____
Do protection devices comply with pump and motor Amp rating? _____
Are all connections tight? _____
Is the interior of the panel dry? _____

ELECTRICAL READINGS:
Single Phase:
Voltage supply at panel line connection, Pump Off, L1, L2 _____
Voltage supply at panel line connection, Pump On, L1, L2 _____
Amperage: Load connection, Pump On L1 _____ L2 _____

Three Phase:
Voltage supply at panel line connection, Pump Off, L1 - L2 _____ L2 - L3 _____ L3 - L1 _____
Voltage supply at panel line connection, Pump On, L1 - L2 _____ L2 - L3 _____ L3 - L1 _____
Amperage: Load connection, Pump On L1 _____ L2 _____ L3 _____

FINAL CHECK:
Is pump seated on discharge properly? _____ Check for leaks? _____
Does check valve(s) operate properly? _____
Flow, Does station appear to operate at proper rate? _____ Pump down time _____
Noise level. High _____ Medium _____ Low _____
Comments: _____
_____

Equipment difficulties during start-up _____
_____
_____

MANUALS:
Has operator received pump instructions and parts manual? _____
Has operator received electrical control panel diagram? _____
Has operator been briefed on Warranty? _____
Address of local CP&S Representative/Distributor: _____
I have received the above information (Name of Operator) _____
Name of Company _____
_____ Date: _____
I Certify this report to be accurate (Name of Start-Up person) _____
Employed By _____ Date: _____

Date and time of Start-Up _____
Present at Start-Up
( ) Engineer. _____ ( ) Operator: _____

( ) Contactor: _____ ( ) Other. _____

To be filled out by factory:
Start-Up form checked by: _____ Date warranty registration mailed: _____

IMPORTANT!
WARRANTY REGISTRATION

Your product is covered by the enclosed Warranty.
Complete the Warranty Registration Form and return to
Crane Pumps & Systems, Inc. Warranty Service Group

If you have a claim under the provision of the warranty, contact your local
Crane Pumps & Systems, Inc. Distributor.

FOLD HERE AND TAPE, DO NOT STAPLE

IMPORTANT!

WARRANTY REGISTRATION

CUSTOMER'S NAME _____ **DATE INSTALLED** _____

ADDRESS _____

CITY _____ **STATE** _____ **ZIP** _____

PHONE # _____ **FAX #** _____

DEALER'S NAME _____

CITY _____ **STATE** _____ **ZIP** _____

MODEL NO. _____ **SERIAL NO.** _____

PART NO. _____ **BRAND** _____

FOLD HERE AND TAPE, DO NOT STAPLE

PLACE
STAMP
HERE

CRANE PUMPS & SYSTEMS, INC.
WARRANTY SERVICE GROUP
420 THIRD STREET
PIQUA, OHIO
45356 - U.S.A.

BARNES®

www.cranepumps.com

Series SE-L

2" Spherical Solids Handling
Manual & Automatic

1½" & 2" Discharge

DISCHARGE		2" NPT, Female, Vertical, Bolt-on Flange
LIQUID TEMPERATURE		104°F (40°C) Continuous
VOLUTE		Cast Iron ASTM A-48, Class 30
MOTOR HOUSING		Cast Iron ASTM A-48, Class 30
SEAL PLATE		Cast Iron ASTM A-48, Class 30
IMPELLER:	*Design*	2 Vane, open, with pump out vanes on back side. Dynamically balanced, ISO G6.3
	Material	Cast Iron ASTM A-48, Class 30
SHAFT		416 Stainless Steel
SQUARE RINGS		Buna-N
HARDWARE		300 Series Stainless Steel
PAINT		Air Dry Enamel
SEAL:	*Design*	Single Mechanical
	Material	Carbon/Ceramic/Buna-N Hardware -300 Series Stainless
CORD ENTRY		20 ft. (6.1m) Cord with plug on 120 volt & .5HP, 240 volt, 1 phase. Quick connect custom molded for sealing and strain relief
SPEED		1750 RPM (Nominal)
UPPER BEARING		Single Row, Ball, Oil lubricated
	Load	Radial
LOWER BEARING		Single Row, Ball, Oil lubricated
	Load	Radial & Thrust
MOTOR:	*Design*	NEMA L -Single Phase, NEMA B -Three phase Torque Curve, Oil Filled, Squirrel Cage Induction
	Insulation	Class B
SINGLE PHASE		Permanent Split Capacitor (PSC) Includes Overload Protection in Motor
THREE PHASE		200-240/480 is Tri-Voltage motor 600V. Requires overload Protection to be included in control panel
LEVEL CONTROL		**"A"** - Wide Angle, PVC. Mechanical, 15 ft (5m) cord with Piggy-Back Plug, N/O **"AU"**- Wide Angle, Polypropylene, Mechanical, N/O Integral to pump. ON and OFF Points are adjustable
OPTIONAL EQUIPMENT		Seal Material, Impeller Trims, Additional cord, Normally Closed Temperature Sensors with cord for 3 phase pumps (Requires relay in control panel).

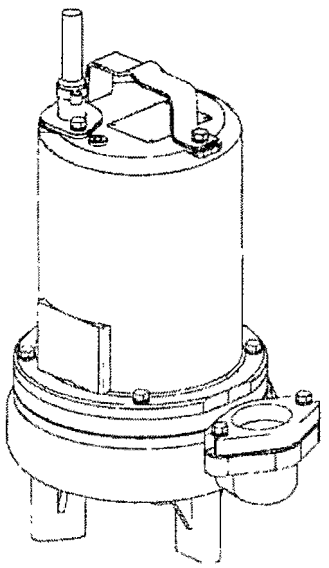

Series: SE (SE51 & SE52)
.5, .75, 1.0HP, 1750RPM, 60Hz

Submersible Wastewater Pump Association
SWPA
MEMBER

C SP R US
CSA 108
UL 778
LR16567

Sample Specifications: Section 1 Page 5

DESCRIPTION:

SUBMERSIBLE NON-CLOG SEWAGE PUMP DESIGNED FOR TYPICAL RAW SEWAGE APPLICATIONS

Series SE-L

2" Spherical Solids Handling
Manual & Automatic

BARNES®

www.cranepumps.com

1½" & 2" Discharge

SE51, SE52, SE-L | SE51A, SE52A | SE51AU, SE52AU

inches (mm)

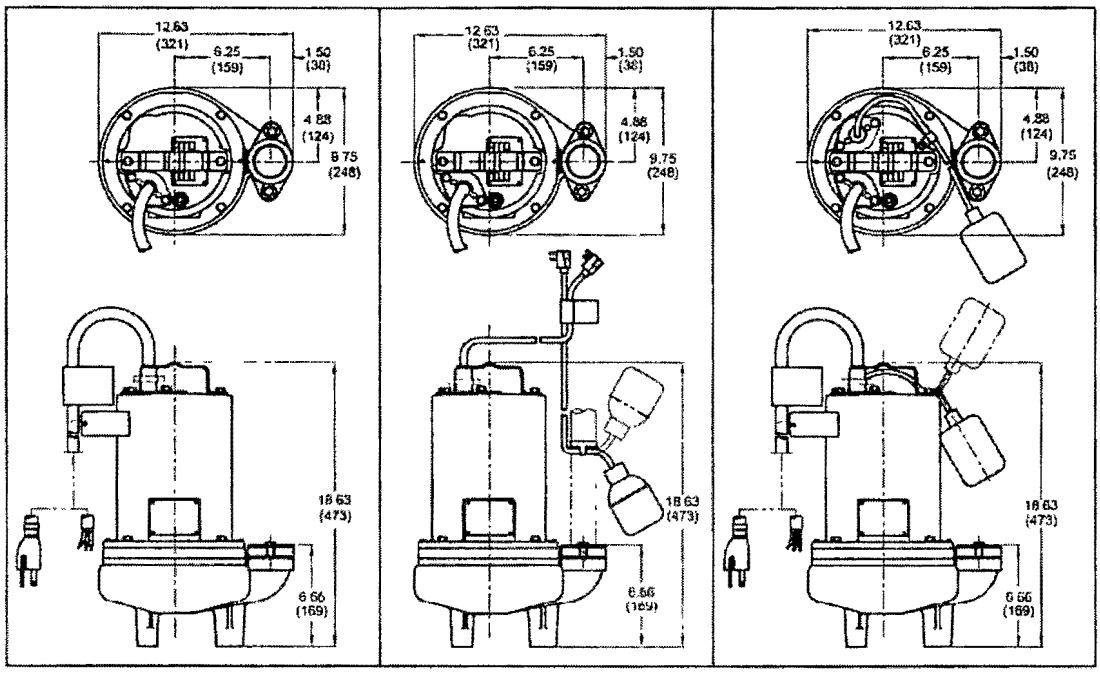

MODEL NO	PART NO	HP	VOLT/PH	Hz	RPM (Nom)	NEMA START CODE	FULL LOAD AMPS	LOCKED ROTOR AMPS	CORD SIZE	CORD TYPE	CORD O.D inch (mm)
SE51	104871	0.5	120/1	60	1750	F	11.6	21.3	14/3	SJTOW	0.375 (9.5)
SE51A	104872	0.5	120/1	60	1750	F	11.6	21.3	14/3	SJTOW	0.375 (9.5)
SE51AU	104873	0.5	120/1	60	1750	F	11.6	21.3	14/3	SJTOW	0.375 (9.5)
SE52	104874	0.5	240/1	60	1750	J	5.9	14.9	14/3	SOW	0.530 (13.5)
SE52AU	104875	0.5	240/1	60	1750	J	5.9	14.9	14/3	SOW	0.530 (13.5)
SE594L	104881	0.5	200-240/3	60	1750	H/L	3.2/3.0	9.8/11.0	14/4	SOW	0.570 (14.5)
SE544L	104882	0.5	480/3	60	1750	K	1.5	5.3	14/4	SOW	0.570 (14.5)
SE554L	104883	0.5	600/3	60	1750	H	1.0	3.4	14/4	SOW	0.570 (14.5)
SE774L	104884	0.75	200-240/1	60	1750	G/K	7.4/7.0	21.5/25.8	14/3	SOW	0.530 (13.5)
SE794L	104885	0.75	200-240/3	60	1750	H/K	4.8/4.5	13.7/15.4	14/4	SOW	0.570 (14.5)
SE744L	104886	0.75	480/3	60	1750	K	2.2	7.7	14/4	SOW	0.570 (14.5)
SE754L	104887	0.75	600/3	60	1750	L	1.5	7.2	14/4	SOW	0.570 (14.5)
SE1074L	104888	1.0	200-240/1	60	1750	D/G	8.8/8.3	21.5/25.8	14/3	SOW	0.530 (13.5)
SE1094L	104889	1.0	200-240/3	60	1750	E/H	5.1/4.9	13.7/15.4	14/4	SOW	0.570 (14.5)
SE1044L	104890	1.0	480/3	60	1750	H	2.4	7.7	14/4	SOW	0.570 (14.5)
SE1054L	104891	1.0	600/3	60	1750	J	1.9	7.2	14/4	SOW	0.570 (14.5)

Mechanical Switch on SE51A, cord 16/2, SJOW, 0.320 (8.1mm) O.D , Piggy-Back Plug
Mechanical Switch on SE-AU, cord 14/2, SJOW, 0.345 (8.8mm) O.D.

IMPORTANT !

1.) PUMP MAY BE OPERATED "DRY" FOR EXTENDED PERIODS WITHOUT DAMAGE TO MOTOR AND/OR SEALS.
2.) THIS PUMP IS APPROPRIATE FOR THOSE APPLICATIONS SPECIFIED AS CLASS I DIVISION II HAZARDOUS LOCATIONS.
3.) THIS PUMP IS NOT APPROPRIATE FOR THOSE APPLICATIONS SPECIFIED AS CLASS I DIVISION I HAZARDOUS LOCATIONS.
4.) INSTALLATIONS SUCH AS DECORATIVE FOUNTAINS OR WATER FEATURES PROVIDED FOR VISUAL ENJOYMENT MUST BE INSTALLED IN ACCORDANCE WITH THE NATIONAL ELECTRIC CODE ANSI/NFPA 70 AND/OR THE AUTHORITY HAVING JURISDICTION. THIS PUMP IS NOT INTENDED FOR USE IN SWIMMING POOLS, RECREATIONAL WATER PARKS, OR INSTALLATIONS IN WHICH HUMAN CONTACT WITH PUMPED MEDIA IS A COMMON OCCURRENCE.

CRANE
A Crane Co Company

PUMPS & SYSTEMS

USA: (937) 778-8947 • Canada: (905) 457-6223 • International: (937) 615-3598

BARNES®

www.cranepumps.com

Series SE -L

Performance Curve

0.5, 0.75, 1HP, 1750RPM, 60Hz

1½" & 2" Discharge

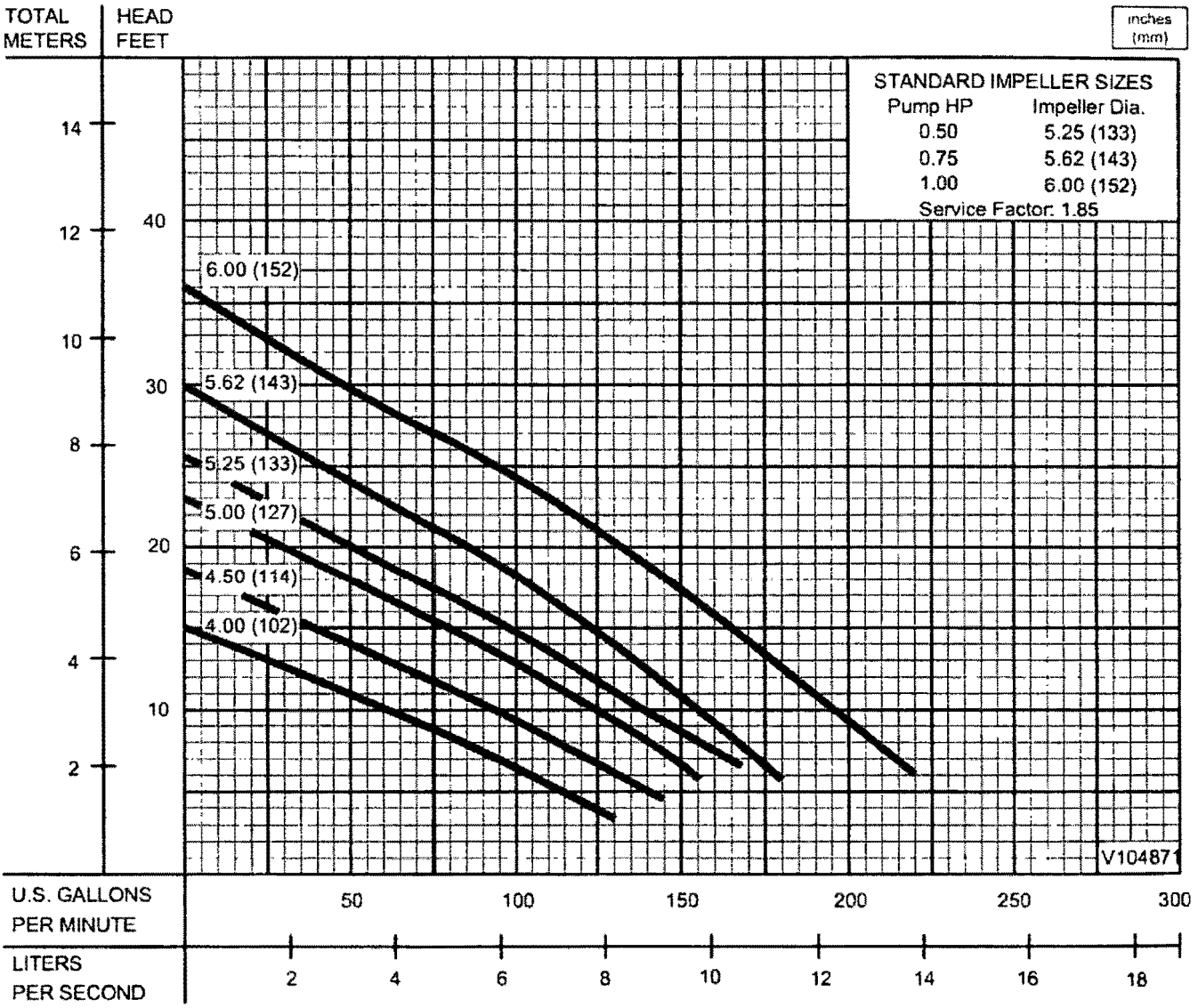

Testing is performed with water, specific gravity 1.0 @ 68° F @ (20°C), other fluids may vary performance

BARNES®

www.cranepumps.com

Series SE-L

2" Spherical Solids Handling
Manual & Automatic

1½" & 2" Discharge

DISCHARGE		2" NPT, Female, Vertical, Bolt-on Flange
LIQUID TEMPERATURE		104°F (40°C) Continuous
VOLUTE		Cast Iron ASTM A-48, Class 30
MOTOR HOUSING		Cast Iron ASTM A-48, Class 30
SEAL PLATE		Cast Iron ASTM A-48, Class 30
IMPELLER:	*Design*	2 Vane, open, with pump out vanes on back side Dynamically balanced, ISO G6.3
	Material	Cast Iron ASTM A-48, Class 30
SHAFT		416 Stainless Steel
SQUARE RINGS		Buna-N
HARDWARE		300 Series Stainless Steel
PAINT		Air Dry Enamel
SEAL:	*Design*	Single Mechanical
	Material	Carbon/Ceramic/Buna-N Hardware -300 Series Stainless
CORD ENTRY		20 ft. (6.1m) Cord with plug on 120 volt & .5HP, 240 volt, 1 phase. Quick connect custom molded for sealing and strain relief
SPEED		1750 RPM (Nominal)
UPPER BEARING		Single Row, Ball, Oil lubricated
	Load	Radial
LOWER BEARING		Single Row, Ball, Oil lubricated
	Load	Radial & Thrust
MOTOR:	*Design*	NEMA L -Single Phase, NEMA B -Three phase Torque Curve, Oil Filled, Squirrel Cage Induction
	Insulation	Class B
SINGLE PHASE		Permanent Split Capacitor (PSC) Includes Overload Protection in Motor
THREE PHASE		200-240/480 is Tri-Voltage motor 600V. Requires overload Protection to be included in control panel
LEVEL CONTROL		**"A"** - Wide Angle, PVC, Mechanical, 15 ft (5m) cord with Piggy-Back Plug, N/O **"AU"**- Wide Angle, Polypropylene, Mechanical, N/O Integral to pump. ON and OFF Points are adjustable
OPTIONAL EQUIPMENT		Seal Material, Impeller Trims, Additional cord, Normally Closed Temperature Sensors with cord for 3 phase pumps (Requires relay in control panel).

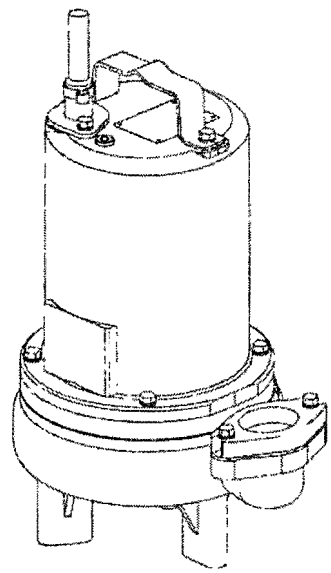

Series: SE (SE51 & SE52)
.5, .75, 1.0HP, 1750RPM, 60Hz

Submersible Wastewater Pump Association
SWPA
MEMBER

C SP R US
CSA 108
UL 778
LR16567

Sample Specifications Section 1 Page 5.

DESCRIPTION:

SUBMERSIBLE NON-CLOG SEWAGE PUMP DESIGNED FOR TYPICAL RAW SEWAGE APPLICATIONS

Series SE-L

2" Spherical Solids Handling
Manual & Automatic

BARNES®

www.cranepumps.com

1½" & 2" Discharge

SE51, SE52, SE-L

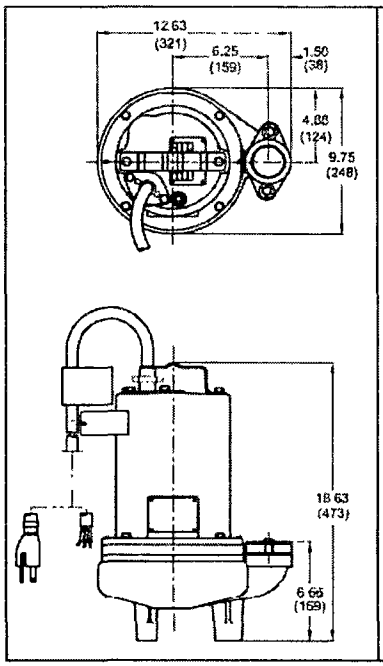

SE51A, SE52A

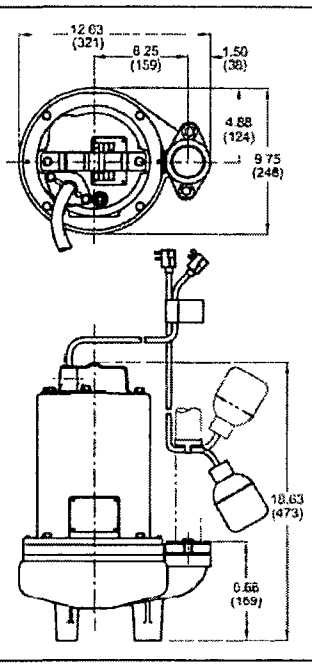

SE51AU, SE52AU

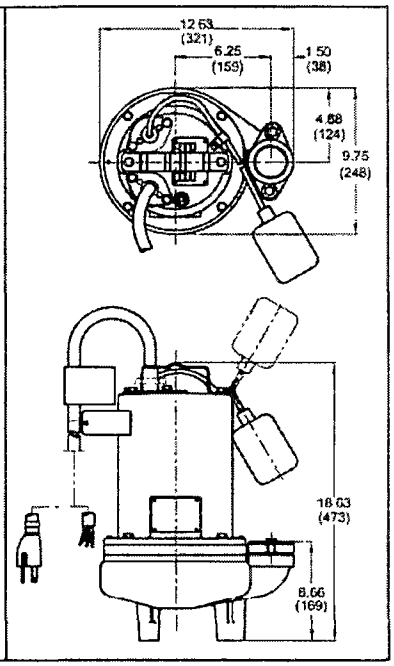

inches
(mm)

MODEL NO	PART NO	HP	VOLT/PH	Hz	RPM (Nom)	NEMA START CODE	FULL LOAD AMPS	LOCKED ROTOR AMPS	CORD SIZE	CORD TYPE	CORD O.D inch (mm)
SE51	104871	0.5	120/1	60	1750	F	11.6	21.3	14/3	SJTOW	0.375 (9 5)
SE51A	104872	0 5	120/1	60	1750	F	11.6	21.3	14/3	SJTOW	0.375 (9.5)
SE51AU	104873	0.5	120/1	60	1750	F	11.6	21.3	14/3	SJTOW	0.375 (9 5)
SE52	104874	0.5	240/1	60	1750	J	5.9	14.9	14/3	SOW	0.530 (13 5)
SE52AU	104875	0.5	240/1	60	1750	J	5.9	14.9	14/3	SOW	0.530 (13.5)
SE594L	104881	0.5	200-240/3	60	1750	H/L	3.2/3.0	9.8/11.0	14/4	SOW	0.570 (14 5)
SE544L	104882	0.5	480/3	60	1750	K	1.5	5.3	14/4	SOW	0.570 (14 5)
SE554L	104883	0.5	600/3	60	1750	H	1 0	3.4	14/4	SOW	0.570 (14.5)
SE774L	104884	0.75	200-240/1	60	1750	G/K	7.4/7.0	21.5/25.8	14/3	SOW	0.530 (13.5)
SE794L	104885	0.75	200-240/3	60	1750	H/K	4.8/4.5	13.7/15.4	14/4	SOW	0.570 (14 5)
SE744L	104886	0.75	480/3	60	1750	K	2.2	7.7	14/4	SOW	0.570 (14.5)
SE754L	104887	0.75	600/3	60	1750	L	1.5	7.2	14/4	SOW	0.570 (14 5)
SE1074L	104888	1.0	200-240/1	60	1750	D/G	8.8/8.3	21.5/25 8	14/3	SOW	0.530 (13.5)
SE1094L	104889	1 0	200-240/3	60	1750	E/H	5.1/4.9	13.7/15.4	14/4	SOW	0.570 (14.5)
SE1044L	104890	1.0	480/3	60	1750	H	2.4	7.7	14/4	SOW	0.570 (14.5)
SE1054L	104891	1.0	600/3	60	1750	J	1.9	7.2	14/4	SOW	0.570 (14.5)

Mechanical Switch on SE51A, cord 16/2, SJOW 0 320 (8.1mm) O D , Piggy-Back Plug
Mechanical Switch on SE-AU, cord 14/2, SJOW, 0 345 (8.8mm) O.D.

IMPORTANT !

1) PUMP MAY BE OPERATED "DRY" FOR EXTENDED PERIODS WITHOUT DAMAGE TO MOTOR AND/OR SEALS.
2.) THIS PUMP IS APPROPRIATE FOR THOSE APPLICATIONS SPECIFIED AS CLASS I DIVISION II HAZARDOUS LOCATIONS
3) THIS PUMP IS NOT APPROPRIATE FOR THOSE APPLICATIONS SPECIFIED AS CLASS I DIVISION I HAZARDOUS LOCATIONS
4) INSTALLATIONS SUCH AS DECORATIVE FOUNTAINS OR WATER FEATURES PROVIDED FOR VISUAL ENJOYMENT MUST BE INSTALLED IN ACCORDANCE WITH THE NATIONAL ELECTRIC CODE ANSI/NFPA 70 AND/OR THE AUTHORITY HAVING JURISDICTION THIS PUMP IS NOT INTENDED FOR USE N SWIMMING POOLS, RECREATIONAL WATER PARKS, OR INSTALLATIONS IN WHICH HUMAN CONTACT WITH PUMPED MEDIA IS A COMMON OCCURRENCE.

BARNES®

www.cranepumps.com

Series SE -L

Performance Curve

0.5, 0.75, 1HP, 1750RPM, 60Hz

1½" & 2" Discharge

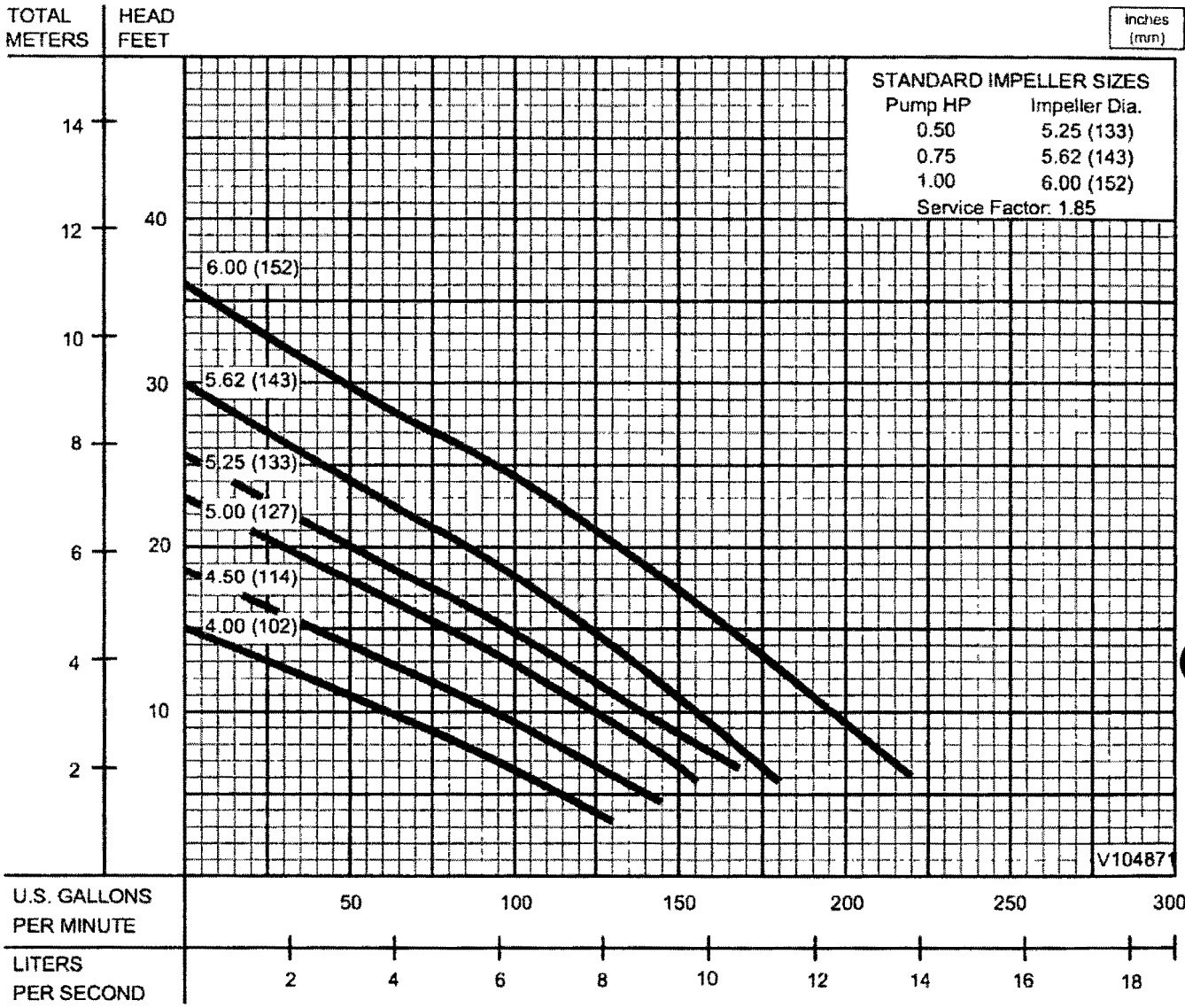

Testing is performed with water, specific gravity 1.0 @ 68° F @ (20°C), other fluids may vary performance

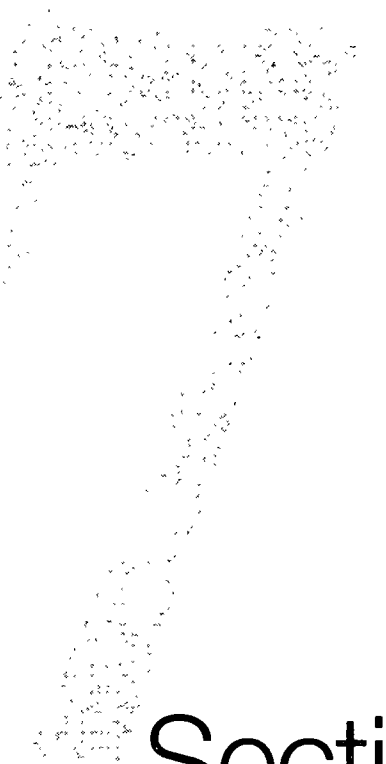

Section Seven

DEVICE DESIGNATION

A = A200
F = FREEDOM
I = IT
V = VACUUM
W = ADVANTAGE

0 = SINGLE SPEED, NON REVERSING
1 = SINGLE SPEED, REVERSING
3 = MULTI-MOTOR
4 = TWO SPEED, ONE WINDING, NON REVERSING
5 = TWO SPEED, TWO WINDING, NON REVERSING

STARTERS/CONTACTORS – F206 1

2 = FULL VOLTAGE, MAGNETIC
5 = SOLID STATE
4 = RESISTANCE
3 = ADJUSTABLE FREQUENCY CONTROLLERS
6 = REDUCED VOLTAGE AUTO XFMR, MAGNETIC
7 = REDUCED VOLTAGE PART WINDING, MAGNETIC
8 = REDUCED VOLTAGE WYE DELTA, MAGNETIC
9 = FULL VOLTAGE 2 SPEED, MAGNETIC

4 = FUSIBLE DISCONNECT SWITCH
6 = FULL VOLTAGE CONTACTOR/THERM. MAG./CURRENT LIMITER
5 = CIRCUIT BREAKER, HMCP OR THERM. MAG
7 = CIRCUIT BREAKER, HMCP OR THERM MAG/CURRENT LIMITER
8 = THERMAL MAG BREAKER WITH CONTACTOR
0 = FUSIBLE DISCONNECT SWITCH WITH CONTACTOR

NEMA STARTER/CONTACTOR SIZE – "0" "1" "2" "3" "4" "5" "6" "7" L = LOW RANGE

ABBREVIATION LEGEND

HP – HORSE POWER
FLA – FULL LOAD AMPS
KW – KILOWATTS
CPT – CONTROL POWER TRANSFORMER
WD – WIRING DIAGRAM
CT – CURRENT TRANSFORMER
AFD – ADJUSTABLE FREQUENCY DRIVE
VFD – VARIABLE FREQUENCY DRIVE
CB – CIRCUIT BREAKER
BKR – BREAKER
FDR – FEEDER
SVM – SERVICE VOLTAGE MONITOR
DS – DISCONNECT SWITCH

INSTALL WARRICK RELAYS WHERE SHOWN ON DRAWINGS

NAMEPLATES FEATURES

NAMEPLATE COLOR IS BLACK / WHITE LETTERS
NAMEPLATE ATTACHED WITH STAINLESS STEEL SELF TAPING SCREWS.
1", 3 LINE NAMEPLATE IS SUPPLIED AS STANDARD. 2", 5 LINE SUPPLIED WHEN LINES 4 & 5 HAVE VALUES.
STANDARD CHARACTERS HEIGHT IS 0.1875 [4.78].
17 CHARACTERS MAXIMUM ON LINES 1, 3, 4 & 5 (STANDARD HEIGHT).
15 CHARACTERS MAXIMUM ON LINE 2 (STANDARD HEIGHT).

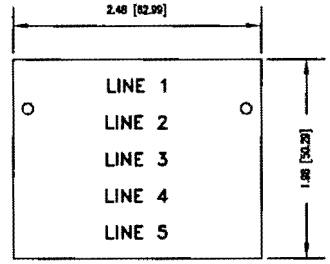

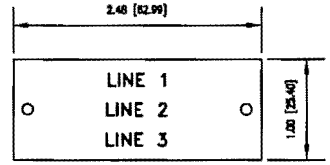

SCHEMATIC DESIGNATION

- TERMINAL POINT
- N.O. CONTACT
- N.C. CONTACT
- N.O.T.C. ON-DELAY SWITCH
- N.C.T.O. ON-DELAY SWITCH
- N.O.T.O. OFF-DELAY SWITCH
- N.C.T.C. OFF-DELAY SWITCH
- N.O. THERMOSTAT
- N.C. THERMOSTAT
- N.O. FLOAT SWITCH
- N.C. FLOAT SWITCH
- N.O. PRESSURE SWITCH
- N.C. PRESSURE SWITCH
- N.O. FLOW SWITCH
- N.C. FLOW SWITCH
- N.O. LIMIT SWITCH
- N.C. LIMIT SWITCH
- M – MECHANICALLY INTERLOCKED
- ▲ – REMOTE DEVICE

TWO POSITION SWITCH
THREE POSITION SWITCH
FOUR POSITION SWITCH

- N.O. PUSHBUTTON
- N.C. PUSHBUTTON
- N.C. MAINTAINED PUSHBUTTON
- N.O. MAINTAINED PUSHBUTTON
- N.O N.C. PUSHBUTTON
- MECH. INTERLOCKED PUSHBUTTON
- INDICATING LIGHT
- PUSH-TO-TEST LIGHT

- CONTROL POWER TRANSFORMER
- CURRENT TRANSFORMER
- FUSE
- DIODE
- SOLENOID
- GROUND
- SURGE SUPPRESSOR
- 1 PHASE CAPACITOR
- MOTOR
- COIL
- HEATER

REVISION	
01	

Issued For Approval

The information on this document is intended to convey and document that the correct specification has been accurately interpreted and may not be accurate for construction purposes

THE INFORMATION ON THIS DOCUMENT WAS CREATED BY CUTLER-HAMMER. IT WAS DISCLOSED IN CONFIDENCE AND IS ONLY TO BE USED FOR THE PURPOSE IN WHICH IT WAS SUPPLIED

DFTR	DATE
T973	5/13/08
APPD	DATE
T973	5/13/08
E.O.	
FEDERAL ID NO.	PRODUCT CODE
68725	MCC
REVISION	
01	

MEC-ALT NUMBER: T9730513B09-0000
ITEM NUMBER:
REFERENCE NUMBER: MCC

Eaton | Cutler-Hammer

TITLE: T9730513B09
MCC

TYPE: FREEDOM MCC

LEGEND

G.O.: MCCDWGS
DWG: SKETCH1
SHEET 1 OF 1

COEFTBL REV_02

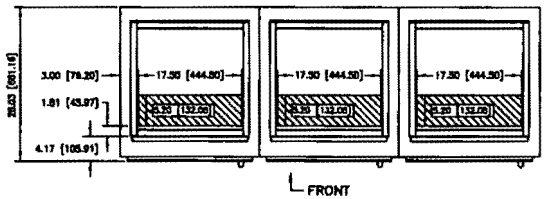

TOP PLAN VIEW

ROOF SHEET AND TRIM IS NOT SHOWN FOR CLARITY MIN. DISTANCE ROOF TO WALL IS 3.00" [76.20].

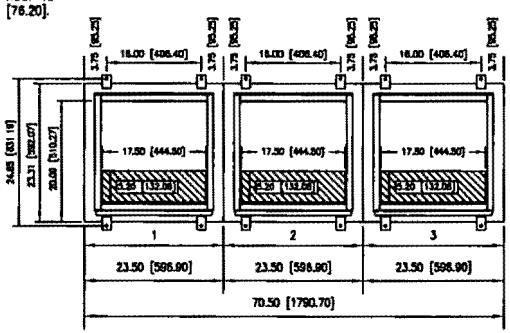

BOTTOM PLAN VIEW

GENERAL INFORMATION

CODES, STANDARDS AND CERTIFICATIONS
STANDARDS: UL845, NEMA, NEC

GENERAL
SERVICE VOLTAGE: 208VAC
FREQUENCY: 60HZ
SYSTEM: 3PH4W
SERVICE FACTOR: 1.15
CONTROL VOLTAGE: 120VAC
CONTROL VOLTAGE SOURCE: LINE/NEUTRAL
WIRING CLASS: 1B

ENCLOSURE FEATURES
TYPE: 3R NON WALK-IN
CONFIGURATION: 21"D FRONT MT ONLY, 90"H
HORIZONTAL WIRE WAY 9" HIGH, TOP & BOTTOM
150W SPACE HEATERS WITH THERMOSTAT

BUS FEATURES
BRACING: 65K
HORIZONTAL AMPS: 600A
HORIZONTAL MATERIAL: COPPER
HORIZONTAL PLATING: TIN
MAXIMUM TEMPERATURE RISE: 65°C OVER 40 °C AMBIENT
VERTICAL AMPS: SEE ELEVATION
VERTICAL MATERIAL: COPPER, TIN PLATED
VERTICAL BARRIER: ISOLATED, RED
GROUND SIZE: 0.25" X 1.00"
GROUND LOCATION: TOP
GROUND LUG PLACEMENT: INCOMING LINE
GROUND LUG SIZE: 1-#6-350KCMIL
GROUND LUG TYPE: SCREW
NEUTRAL AMPS: 600A
NEUTRAL LOCATION: BOTTOM
NEUTRAL LUG PLACEMENT: INCOMING LINE
NEUTRAL LUG SIZE: 1-#6-350KCMIL
NEUTRAL LUG TYPE: SCREW

INCOMING LINE
SEE UNIT LISTING FOR MAIN DEVICE TYPE & DETAILS

WIRING FEATURES
CONTROL WIRE TYPE: #16AWG, MTW CONTROL WIRE
POWER WIRE: UL MTW - CSA TEW-AWM
TERMINAL BLOCKS: STD-LATCHING PULL APART
MOTOR OL: BI-METALIC CLASS 20 AMBIENT COMPENSATED, HEATERS BY CUSTOMER

PILOT DEVICE FEATURES (IF SUPPLIED)
(SEE UNIT LISTING FOR DEVICE DETAILS)
DEVICE TYPE: 10250T
INDICATING LIGHT TYPE: PUSH TO TEST
INDICATING BULB TYPE: INCANDESCENT

NOTE
1) ANCHOR BOLT CLEARANCE HOLE IS 0.53 [13.46] DIAMETER
2) MINIMUM LENGTH OF ANCHOR BOLT ABOVE GRADE 1.25 [31.75] (.38-16 GRADE 5 TORQUED AT 31lb-ft [43.4Nm])
3) APPROXIMATE WEIGHT OF EACH ENCLOSURE 400lb [181.434kg]

▨ - AVAILABLE CONDUIT SPACE

REVISION 01		Issued For Approval	THE INFORMATION ON THIS DOCUMENT WAS CREATED BY CUTLER-HAMMER. IT WAS DISCLOSED IN CONFIDENCE AND IS ONLY TO BE USED FOR THE PURPOSE IN WHICH IT WAS SUPPLIED	DFTR T973 DATE 5/13/08 APPD T973 DATE 5/13/08 S.O	MEC-ALT NUMBER: T9730513809-0000 ITEM NUMBER: REFERENCE NUMBER: MCC	Eaton | Cutler-Hammer	
				FEDERAL ID NO. 88725 PRODUCT CODE MCC REVISION 01		TITLE T9730513809 MCC TYPE FREEDOM MCC	PLAN VIEW
					G.D MCCDWGS DWG SKETCH2		SHEET 1 OF 1

COEFTBL REV 02

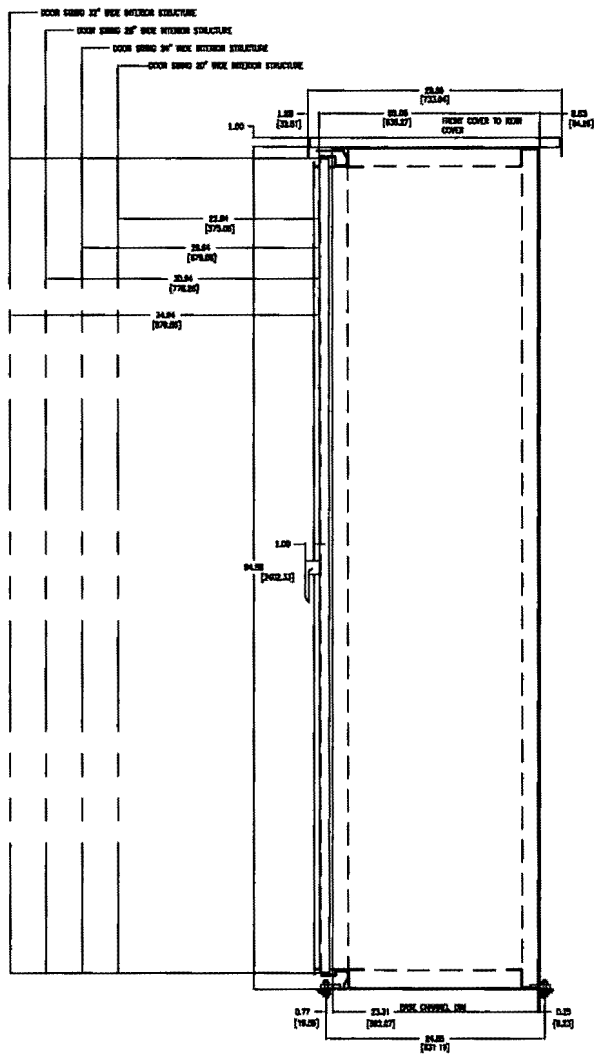

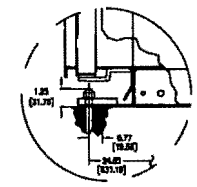

RECOMMENDED STANDARD ANCHOR BOLTING.

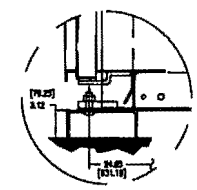

RECOMMENDED STANDARD ANCHOR BOLTING WITH OPTIONAL CHANNEL SILLS. DETAIL REFLECTS SILLS MOUNTED ON TOP OF CONCRETE. (CHANNEL SILLS PROVIDED ONLY WHEN SPECIFIED)

NEG-ALT NUMBER: T97305131809-0000
ITEM NUMBER:

REFERENCE NUMBER: MCC

Issued For Approval

The information on this document is intended to convey and document that the contract specification has been accurately interpreted and may not be accurate for construction purposes.

THE INFORMATION ON THIS DOCUMENT WAS CREATED BY CUTLER-HAMMER. IT WAS DISCLOSED IN CONFIDENCE AND IS ONLY TO BE USED FOR THE PURPOSE IN WHICH IT WAS SUPPLIED.

DFTR T973	DATE 5/13/08
APPD T973	DATE 5/13/08
S.O	
FEDERAL ID NO. 88725	PRODUCT CODE MCC
REVISION 01	

WATON | Cutler-Hammer

TITLE T97305131809 MCC

TYPE FREEDOM MCC

SIDE VIEW

O.D MCCDWGS

DWG SKETCH3

SHEET 1 OF 1

REVISION 01

CDEFTBL REV 02

DOOR LAYOUT DETAILS

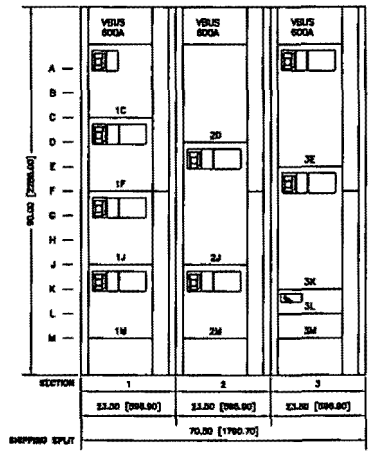

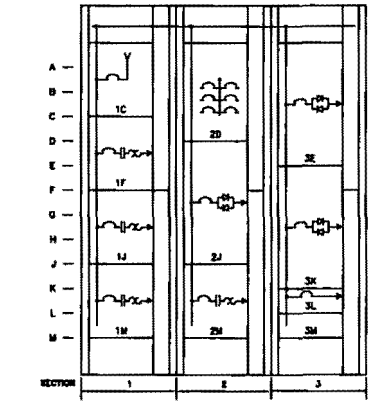

POWER FLOW

01	REVISION		Issued For Approval	THE INFORMATION ON THIS DOCUMENT WAS CREATED BY CUTLER-HAMMER. IT WAS DISCLOSED IN CONFIDENCE AND IS ONLY TO BE USED FOR THE PURPOSE IN WHICH IT WAS SUPPLIED.	DFTR T973 DATE 5/13/08	MEC-ALT NUMBER: T9730513809-0000 ITEM NUMBER: REFERENCE NUMBER: MCC	
			The information on this document is intended to convey and document that the contract specification has been accurately interpreted and may not be accurate for construction purposes.		APPD T973 DATE 5/13/08	Eaton | Cutler-Hammer	
					S.O.	TITLE T9730513809 MCC	
						TYPE FREEDOM MCC	ELEVATION
				FEDERAL ID NO. 88725 PRODUCT CODE MCC	REVISION 01	G.O MCCDWGS DWG SKETCH4	SHEET 1 OF 1

COEFTBL REV 02

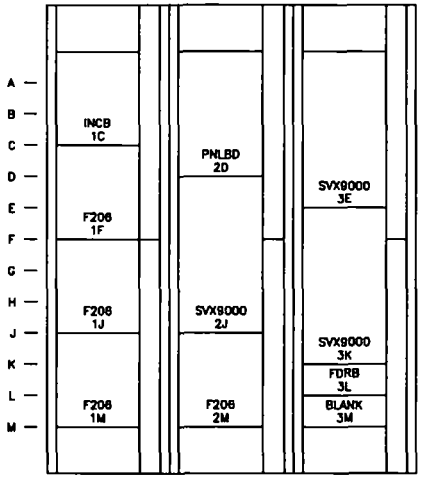

NAMEPLATE FEATURES

NAMEPLATE COLOR IS BLACK / WHITE LETTERS
NAMEPLATE ATTACHED WITH STAINLESS STEEL SELF TAPING SCREWS.
1", 3 LINE NAMEPLATE IS SUPPLIED AS STANDARD. 2", 5 LINE SUPPLIED WHEN LINES 4 & 5 HAVE VALUES.
STANDARD CHARACTERS HEIGHT IS 0.1875 [4.76].
17 CHARACTERS MAXIMUM ON LINES 1, 3, 4 & 5 (STANDARD HEIGHT).
15 CHARACTERS MAXIMUM ON LINE 2 (STANDARD HEIGHT).

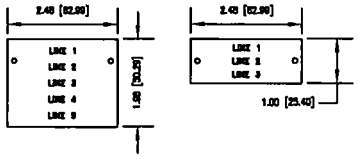

LOW VOLTAGE MCC UNIT SCHEDULE

ID		DEVICE INFORMATION							PROTECTION INFO						UNIT DATA			TERMINATIONS					
SECTION NUMBER	CELL	CIRCUIT NAMEPLATE	DEVICE TYPE	DEVICE MOUNTING (SEE NOTES)	DEVICE SIZE	POLES	KAIC RATING	BREAKER FRAME	RATING PLUG	TRIP AMPERES	STARTER NEMA SIZE	ACTUAL LOAD SIZE	FULL LOAD AMPERES	OVERLOAD (HEATER OR SOLID STATE CURRENT RANGE)	CPT SIZE	ADDITIONAL ACCESSORIES, FEATURES, & NOTES	DEVICE SPACE REQUIREMENT (INCHES)	CONTROL CABLE ENTRY DIRECTION	POWER CABLE ENTRY DIRECTION	TYPE (SEE NOTES)	PHASE SIZE	# PER PHASE	DETAILED DRAWING REFERENCE OR CATALOG NUMBER
1	C	200A MAIN CB	MAIN BREAKER (INCB)	D	200A	3	65	HFD		200							18		TOP	M	#4-4/0 AWG	1	281757
1	F	SIZE 1 FVNR-230	FVNR STARTER (F206)	F		3	65	HMCP		30	1	3			LINE	ADDITIONAL X-SPACE 3 POS. SEL. SEL. 102501 (HAND-OFF-AUTO) PILOT LIGHT-PIT-102501 (RUN) PILOT LIGHT-PIT-102501 (OVERLOAD TRIP) PILOT LIGHT-PIT-102501 (MISC) TERM ELAPSED TIME METER C-H MODEL 07, 300W, 4 POLE SOCKET RELAY C-H MODEL T39 SOLID STATE OB-DELAY TIMER	18	EITHER	EITHER	M	#14-6 AWG	1	265737
1	J	SIZE 1 DR-4 FNP-140	FVNR STARTER (F206)	F		3	65	HMCP		3	1	0.5			LINE	ADDITIONAL X-SPACE 3 POS. SEL. SEL. 102501 (HAND-OFF-AUTO) PILOT LIGHT-PIT-102501 (RUN) PILOT LIGHT-PIT-102501 (STOP/FLT) PILOT LIGHT-PIT-102501 (OVERLOAD TRIP) C-H MODEL 07, 300W, 4 POLE SOCKET RELAY	18	EITHER	EITHER	M	#14-6 AWG	1	265737
1	M	SIZE 1 DR-5 FNP-150	FVNR STARTER (F206)	F		3	65	HMCP		3	1	0.5			LINE	ADDITIONAL X-SPACE 3 POS. SEL. SEL. 102501 (HAND-OFF-AUTO) PILOT LIGHT-PIT-102501 (RUN) PILOT LIGHT-PIT-102501 (STOP/FLT) PILOT LIGHT-PIT-102501 (OVERLOAD TRIP) C-H MODEL 07, 300W, 4 POLE SOCKET RELAY	18	EITHER	EITHER	M	#14-6 AWG	1	265737
2	D		PANELBOARD (PNLBD)	F	100A	18										SEE PANELBOARD SCHEDULE 2D	24							8A10388
2	J	2HP VFD DR-1 FNP-110	VARIABLE FREQUENCY DRIVE (SVX9000)	F	7.6A	3	65	HMCP		15		2			IF REQ	CONSTANT TORQUE RATED PILOT LIGHT-PIT-102501 (RUN) PILOT LIGHT-PIT-102501 (STOP/FLT) PILOT LIGHT-PIT-102501 (OVERLOAD TRIP) TERM ELAPSED TIME METER (4) C-H MODEL 07, 300W, 4 POLE SOCKET RELAY	30	EITHER	EITHER	M	CONTACT EATON	1	284479
2	M	SIZE 1 SPARE	FVNR STARTER (F206)	F		3	65	HMCP		15	1	3			LINE	ADDITIONAL X-SPACE 3 POS. SEL. SEL. 102501 (HAND-OFF-AUTO) PILOT LIGHT-PIT-102501 (RUN) PILOT LIGHT-PIT-102501 (STOP/FLT) PILOT LIGHT-PIT-102501 (OVERLOAD TRIP) C-H MODEL 07, 300W, 4 POLE SOCKET RELAY	18	EITHER	EITHER	M	#14-6 AWG	1	265737
3	E	2HP VFD DR-2 FNP-120	VARIABLE FREQUENCY DRIVE (SVX9000)	F	7.6A	3	65	HMCP		15		2			IF REQ	CONSTANT TORQUE RATED PILOT LIGHT-PIT-102501 (RUN) PILOT LIGHT-PIT-102501 (STOP/FLT) PILOT LIGHT-PIT-102501 (OVERLOAD TRIP) TERM ELAPSED TIME METER (4) C-H MODEL 07, 300W, 4 POLE SOCKET RELAY	30	EITHER	EITHER	M	CONTACT EATON	1	284479
3	K	2HP VFD DR-3 FNP-130	VARIABLE FREQUENCY DRIVE (SVX9000)	F	7.6A	3	65	HMCP		15		2			IF REQ	CONSTANT TORQUE RATED PILOT LIGHT-PIT-102501 (RUN) PILOT LIGHT-PIT-102501 (STOP/FLT) PILOT LIGHT-PIT-102501 (OVERLOAD TRIP) TERM ELAPSED TIME METER (4) C-H MODEL 07, 300W, 4 POLE SOCKET RELAY	30	EITHER	EITHER	M	CONTACT EATON	1	284479
3	L	100A CB ABB STRIPPER FEEDER BREAKER	FEEDER BREAKER (FDRB)	D	100A	3	65	E125H		100							6		EITHER	M			5599A85
3	M		DOOR (BLANK)														6						

NOTES:
1) DEVICE MOUNTING: D=DRAWOUT, F=FIXED
2) TERMINATION TYPE: M=MECHANICAL, C=CRIMP

REVISION	
01	

Issued For Approval

The information on this document is intended to convey and document that the contract specification has been accurately interpreted and may not be accurate for construction purposes.

THE INFORMATION ON THIS DOCUMENT WAS CREATED BY CUTLER-HAMMER. IT WAS DISCLOSED IN CONFIDENCE AND IS ONLY TO BE USED FOR THE PURPOSE IN WHICH IT WAS SUPPLIED.

DFTR	DATE
T973	5/13/08
APPD	DATE
T973	5/13/08
S.O	

FEDERAL ID NO.	PRODUCT CODE	REVISION
88725	MCC	01

MEC-ALT NUMBER: T9730513B09-0000
ITEM NUMBER:
REFERENCE NUMBER: MCC

Eaton | Cutler-Hammer

TITLE: T9730513B09
MCC

TYPE: FREEDOM MCC

UNIT SCHEDULE

G.O: MCCDWGS

DWG: SKETCH5

SHEET 1 OF 1

COEFTBL REV_02

PANELBOARD SCHEDULE 2D

CKT	DESCRIPTION	TYPE	POLES	TRIP	TRIP	POLES	TYPE	DESCRIPTION	CKT
1		BAB	1	20	20	1	BAB		2
3		BAB	1	20	20	1	BAB		4
5		BAB	1	20	20	1	BAB		6
7		BAB	1	20	20	1	BAB		8
9		BAB	1	20	20	1	BAB		10
11		BAB	1	20	20	1	BAB		12
13		BAB	1	20	20	1	BAB		14
15		BAB	1	20	20	1	BAB		16
17		BAB	1	20	20	1	BAB		18

A B C

CHASSIS TYPE: PRL1A
CIRCUITS: 18
VOLTAGE: 120/208V
3 PHASE 4 WIRE
BUS RATING: 100A
INTERRUPTING: BAB 10KA

REVISION	
01	

Issued For Approval

This information on this document is intended to convey and document that the contract specification has been accurately interpreted and may not be accurate for construction purposes.

THE INFORMATION ON THIS DOCUMENT WAS CREATED BY CUTLER-HAMMER. IT WAS DISCLOSED IN CONFIDENCE AND IS ONLY TO BE USED FOR THE PURPOSE IN WHICH IT WAS SUPPLIED

DFTR	DATE
T973	5/13/08
APPD	DATE
T973	5/13/08
S.O.	
FEDERAL ID NO.	PRODUCT CODE
88725	MCC
REVISION	
01	

MEC-ALT NUMBER: T9730513809-0000
ITEM NUMBER:
REFERENCE NUMBER: MCC

Eaton | Cutler-Hammer

TITLE: T9730513809
MCC

TYPE: FREEDOM MCC — PANELBOARD

O.D: MCCDWGS — DWG: SKETCH6 — SHEET 1 OF 1

COEFTBL REV 02

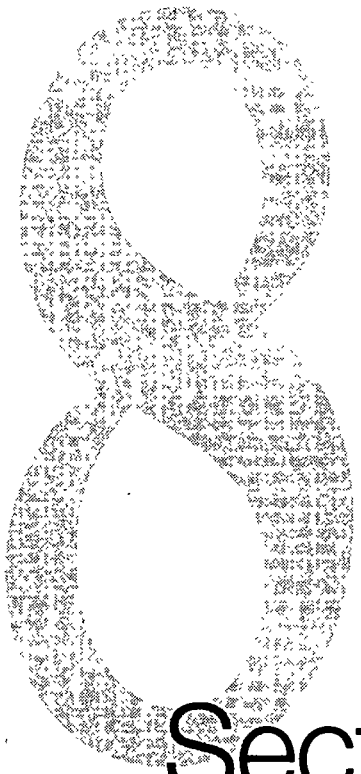

Section Eight

TABLE OF CONTENTS

Document Page

Frontpage ... 1
Project properties ... 3
Project structure ... 4
PLC configuration ... 5
I/O map ... 8
Derived Datatypes ... 11
  Datatypes from Library COMM ... 11
  Datatypes from Library CONT_CTL ... 13
  Datatypes from Library DIAGNO ... 24
  Datatypes from Library EXPERTS ... 25
  Datatypes from Library FUZZY ... 31
  Datatypes from Library HANDTABL ... 32
  Datatypes from Library LIB984 ... 33
  Datatypes from Library SYSTEM ... 34
  Project Datatypes ... 40
  Global Datatypes ... 41
Variable list ... 42
Variable usage ... 51
State RAM usage overview ... 79
Execution order ... 88
Sections (alphabetic order) ... 89
  DAILY_FLOW_TOTAL_STORAGE_01 ... 89
  DAILY_FLOW_TOTAL_STORAGE_02 ... 101
  DAILY_FLOW_TOTAL_STORAGE_03 ... 113
  AD_ALARMS ... 115
  AIR_STRIPPER ... 119
  ANALOG ... 125
  BAGFILTER_SCALENT_VGAC ... 135
  DISCHARGE_WETWELL_AND_PUMP ... 139
  EXTRACTION_WELLS ... 143
  SHUTDOWN ... 164
  SYS_OH ... 172
DFB usage ... 174
EFB usage ... 175
ASCII-Messages ... 195
Message Window contents ... 196

BLANK PAGE

Project Number:

Creation Date: 12/12/2008 18:42:18

Modification Date: 9/15/2009 10:47:43

Language :

x	SFC
x	FBD
x	LD
x	ST
x	IL
x	LL984
x	DFBs

STATUS:

x	DRAFT
	IN REVIEW
	RELEASED
	IN CHANGE
	INVALID

Description:

Comments:

Author(s): Concept Development Team

Approved:

History of Modification:

Rev.	Date	Author	Description of Modifications
2.0	22.07.96	Concept Team	all

Project properties

Database version : 9/15/2009 10:47:43
PLC related version : 9/15/2009 10:37:31
Global DFB Path : C:\CONCEPT\OMEGA\UPL\GLB\
Secure Application : No

Project structure

```
Project : OMEGA
    LD:SYS_OH
    FBD:DAILY_FLOW_TOTAL_STORAGE_01
    FBD:DAILY_FLOW_TOTAL_STORAGE_02
    FBD:DAILY_FLOW_TOTAL_STORAGE_03
    LD:SHUTDOWN
    LD:DISCHARGE_WETWELL_AND_PUMP
    LD:AIR_STRIPPER
    LD:BAGFILTER_SCALENT_VGAC
    LD:EXTRACTION_WELLS
    LD:ANALOG
    LD:AD_ALARMS
```

PLC-Configuration

PLC Selection

PLC Type	171 CCC 960 30-IEC
Exec Id	899
Memory Size	20 K logic / 16 K state
Extended Memory	No
IEC Runtime	Enabled
IEC Usable Memory Size	0

PLC Memory Partition

Coils	(0x)	1536	000001-001536
Discrete Inputs	(1x)	512	100001-100512
Input registers	(3x)	48	300001-300048
Holding registers	(4x)	1872	400001-401872

ASCII Setup

Total Message	0
Message area size	0
ASCII Ports	0

Configuration Extensions

Data Protection	No
Peer Cop	No
Hot Standby	No
Ethernet	1
Profibus DP	No

Specials

Battery Coil	No
Timer Register	400090
Time Of Day	400050 - 400057
Duplicate coils	No
First Coil Address	-
Watchdog Timeout [ms*10]	30
Online Editing Timeslice [ms]	20

Segment Scheduler

Schedule	Type of Solve	Reference	Sense	Segment	Drop Input	Drop Output
1	Continuous			1	1	1
2	Continuous			2		
3	Continuous			3		
4	End of Logic					
5	End of Logic					
6	End of Logic					
7	End of Logic					
8	End of Logic					
9	End of Logic					
10	End of Logic					
11	End of Logic					
12	End of Logic					
13	End of Logic					
14	End of Logic					
15	End of Logic					
16	End of Logic					
17	End of Logic					
18	End of Logic					
19	End of Logic					
20	End of Logic					
21	End of Logic					
22	End of Logic					
23	End of Logic					
24	End of Logic					
25	End of Logic					
26	End of Logic					
27	End of Logic					
28	End of Logic					
29	End of Logic					
30	End of Logic					
31	End of Logic					
32	End of Logic					

Ethernet Parameters

Slot	Module Name	IP Cfg	Internet Addr	Subnet Mask	Gateway Addr	Frame Type	Health Block	Diag Block
1-1	171 CCC 960 30->	Specify	192.168.100.002	255.255.255.000	000.000.000.000	Ethernet II		

Modbus Port Settings (Bridge Mode: No)

Port	Baudrate	Data bits	Stop bits	Parity	Delay (ms)	Address	Head Slot	Mode	Protocol
2	9600	8	1	even	10	1	0	RTU	RS485

I / O Map

Remote (Head slot 0)

Drop	Type	Modules	Holdup [ms]	Input-Bits	Output-Bits	Status Reg.	Activate
1	Momentum	1	-	16	0		-
2	I/O Bus	9	-	544	624		-

Local Drop

Drop Type: Momentum Drop 1

Slot	Module name	Input Range	Output Range	Module description	In/Out-Type	Timeout-State
1	ADI-540-50	100001-100016		120V AC-16 Pt Input	BIN	

Remote (Head slot 0)

Drop Type: I/O Bus Drop 2

Slot	Module name	Input Range	Output Range	Module description	In/Out-Type	Timeout-State
1	ADI-540-50	100017-100032		120V AC-16 Pt Input	BIN	
2	ADI-540-50	100033-100048		120V AC-16 Pt Input	BIN	
3	ADO-540-50		000001-000016	120V AC-16 Pt Output	BIN	
4	ADO-540-50		000017-000032	120V AC-16 Pt Output	BIN	
5	AAI-030-00	300001-300008	400009-400016	Analog-8 Ch differential Input		
6	AAI-030-00	300009-300016	400017-400024	Analog-8 Ch differential Input		
7	AAI-030-00	300017-300024	400025-400032	Analog-8 Ch differential Input		
8	AAO-921-00		400001-400005	Analog-4 Ch 4-20mA Output		
9	AAI-030-00	300025-300032	400033-400040	Analog-8 Ch differential Input		

Parameter AAI-030-00 (Slot 5)

Channel	Type
1	1..5V and 4..20mA
2	1..5V and 4..20mA
3	1..5V and 4..20mA
4	1..5V and 4..20mA
5	1..5V and 4..20mA
6	1..5V and 4..20mA
7	1..5V and 4..20mA
8	1..5V and 4..20mA

Parameter Word 1: AAAA
Parameter Word 2: AAAA

Parameter AAI-030-00 (Slot 6)

Channel	Type
1	1..5V and 4..20mA
2	1..5V and 4..20mA
3	1..5V and 4..20mA
4	1..5V and 4..20mA
5	1..5V and 4..20mA
6	1..5V and 4..20mA
7	1..5V and 4..20mA
8	1..5V and 4..20mA

Parameter Word 1: AAAA
Parameter Word 2: AAAA

Parameter AAI-030-00 (Slot 7)

Channel	Type
1	1..5V and 4..20mA
2	1..5V and 4..20mA
3	1..5V and 4..20mA
4	1..5V and 4..20mA
5	1..5V and 4..20mA
6	1..5V and 4..20mA
7	1..5V and 4..20mA
8	1..5V and 4..20mA

Parameter Word 1: AAAA
Parameter Word 2: AAAA

Parameter AAO-921-00 (Slot 8)

Channel	Type
1	Output to Zero
2	Output to Zero
3	Output to Zero
4	Output to Zero

Parameter Word 1: 1111

Parameter AAI-030-00 (Slot 9)

Channel	Type
1	1..5V and 4..20mA
2	1..5V and 4..20mA
3	1..5V and 4..20mA
4	1..5V and 4..20mA
5	1..5V and 4..20mA
6	1..5V and 4..20mA
7	1..5V and 4..20mA
8	1..5V and 4..20mA

Parameter Word 1: AAAA
Parameter Word 2: AAAA

Datatypes from Library COMM

```
(* library.dty       Derived datatypes definition file:          *)

(* You should edit this file, if you need some derived datatypes *)
(* in conjunction with EFBs of this library.                     *)
(* Syntax is given by IEC 1131-3 ST (Structured Text) language   *)

(* fur ICNT und ICOM (Interbus S) *)
TYPE
Ibc:
 STRUCT
   service:  BYTE;
   err_cd:  BYTE;
   err_cl:  BYTE;
   cr:   BYTE;
   size:  BYTE;
   e_par:  BYTE;
   index:  WORD;
   subindex: BYTE;
   fillbyte_1: BYTE;
   fillword_1: WORD;
   fillword_2: WORD;
   fillword_3: WORD;
   fillword_4: WORD;
   fillword_5: WORD;
   fillword_6: WORD;
 END_STRUCT;

WordArr5:      ARRAY [1..5] OF WORD;

WordArr128:    ARRAY [1..128] OF WORD;

Ibd:
 STRUCT
   data:       WordArr128;
 END_STRUCT;
END_TYPE

(* data type XMIT_SET contains a structure of configuration parameters *)
(* for the XMIT EFB (added by Joerg Klatte)                            *)

TYPE
XMIT_CFG:
 STRUCT
   Revision    : WORD;
   FaultStatus : WORD;
   UserAvail_1 : WORD;
   BaudRate    : WORD;
   DataBits    : WORD;
   Parity      : WORD;
   StopBits    : WORD;
   UserAvail_2 : WORD;
```

table continued...

Datatypes from Library COMM

```
   CommandWord : WORD;
   MessagePtr  : WORD;
   MessageLen  : WORD;
   RespTimeOut : WORD;
   RetryLimit  : WORD;
   XmStartDelay: WORD;
   XmEndDelay  : WORD;
   CurrentRetry: WORD;
 END_STRUCT;
END_TYPE

TYPE
XMIT_SET:
 STRUCT
   BaudRate    : WORD;
   DataBits    : BYTE;
   Parity      : BYTE;
   StopBits    : BYTE;
   CommandWord : WORD;
   MessageLen  : WORD;
   RespTimeOut : WORD;
   RetryLimit  : WORD;
   XmStartDelay: WORD;
   XmEndDelay  : WORD;
 END_STRUCT;
END_TYPE
```

Datatypes from Library CONT_CTL

```
(* cont_ctl.dty : derived datatypes for the EFB library CONT_CTL *)

TYPE

(* TOTALIZER *)

Mode_TOTALIZER:  (* Operating modes *)
 STRUCT
  hold : BOOL; (* Freeze the integration *)
  rst  : BOOL; (* Reinitialize the function block *)
 END_STRUCT;

Para_TOTALIZER:  (* Parameters *)
 STRUCT
  thld : REAL; (* Integration threshold *)
  cutoff : REAL; (* Integration cutoff *)
  inc_dec : BOOL; (* 0 = increase / 1 = decrease *)
 END_STRUCT;

Info_TOTALIZER:  (* Information parameters *)
 STRUCT
  outc : REAL; (* Accumulated value since the beginning of the integration *)
  cter : UINT; (* Integration counter *)
  done : BOOL; (* Threshold reached *)
 END_STRUCT;

(* SCALING *)

Para_SCALING:  (* Parameters type *)
 STRUCT
  in_min  : REAL; (* IN scale lower limit *)
  in_max  : REAL; (* IN scale higher limit *)
  out_min : REAL; (* OUT scale lower limit *)
  out_max : REAL; (* OUT scale higher limit *)
  clip : BOOL; (* AT 1 if IN not in [IN_MIN , IN_MAX]; OUT is clipped *)
  END_STRUCT;

(* SUM_W *)

Para_SUM_W :   (* Parameters type *)
 STRUCT
  k1: REAL; (* Weight of IN1 *)
  k2: REAL; (* Weight of IN2 *)
  k3: REAL; (* Weight of IN3 *)
  c1: REAL; (* Offset of sum *)
   END_STRUCT;

(* RATIO *)

Para_RATIO :   (* Parameters type *)
 STRUCT
  k_min: REAL; (* K scale lower limit *)
```

table continued...

Datatypes from Library CONT_CTL

```
  k_max: REAL; (* K scale higher limit *)
  sp_min: REAL; (* SP scale lower limit *)
  sp_max: REAL; (* SP scale higher limit *)
  bias: REAL;  (* Bias *)
 END_STRUCT;

(* DTIME *)

buffer_DTIME :   (* Buffer type *)
 ARRAY[1..100]OF REAL; (* Default size is 100 *)

(* STEP2 *)

Para_STEP2 :   (* Parameters type *)
 STRUCT
  dev_ll: REAL; (* Deviation lower threshold *)
  dev_hl: REAL; (* Deviation higher treshold *)
  pv_inf: REAL; (* PV scale lower limit *)
  pv_sup: REAL; (* PV scale higher limit *)
 END_STRUCT;

(* STEP3 *)

Para_STEP3 :   (* Parameters type *)
 STRUCT
  dev_ll: REAL; (* Deviation lower threshold *)
  dev_hl: REAL; (* Deviation higher treshold *)
  hyst: REAL;  (* Hysteresis *)
  pv_inf: REAL; (* PV scale lower limit *)
  pv_sup: REAL;  (* PV scale higher limit *)
 END_STRUCT;

(* MFLOW *)

Para_MFLOW :    (* Parameters type *)
 STRUCT
  k : REAL;  (* Adjustment factor *)
  en_pres : BOOL; (* Validation of PRES input *)
  pr_pa : BOOL; (* 0 : relative pressure ; 1 : absolute pressure *)
  pu : REAL;  (* Pressure of 1 Atm *)
  en_temp : BOOL; (* Validation of TEMP input *)
  tc_tf : BOOL; (* 0 : temperature in °C ; 1 : temperature in °F *)
  en_sqrt : BOOL; (* Validatio of the square root computation *)
   END_STRUCT;

(* RAMP *)

Para_RAMP :   (* Parameters type *)
 STRUCT
  inc_rate : REAL; (* Ramp increase speed (unit : 1/s) *)
  dec_rate : REAL; (* Ramp decrease speed (unit : 1/s) *)
```

table continued...

Datatypes from Library CONT_CTL

```
  END_STRUCT;

(* MS *)

Para_MS :   (* Parameters type *)
 STRUCT
  out_min  : REAL; (* OUT scale lower limit *)
  out_max  : REAL; (* OUT scale higher limit *)
  inc_rate : REAL; (* Increment rate on manu/auto if USE_BIAS = 0 (unit : 1/s) *)
  dec_rate : REAL; (* Decrement rate on manu/auto if USE_BIAS = 0 (unit : 1/s) *)
  outbias  : REAL; (* Bias *)
  use_bias : BOOL; (* Bias handling if USE_BIAS =1  *)
  bumpless : BOOL; (* If 1 and USE_BIAS = 1, bumpless changeover from manu to auto got by BIAS change *)
   END_STRUCT;

(* PIDFF *)

Para_PIDFF :  (* Parameters type *)
 STRUCT
  id       : UINT; (* Reserved for AUTOTUNE *)
  pv_inf   : REAL; (* PV scale lower limit *)
  pv_sup   : REAL; (* PV scale higher limit *)
  out_inf  : REAL; (* OUT scale lower limit *)
  out_sup  : REAL; (* OUT scale higher limit *)
  rev_dir  : BOOL; (* Reverse (0) or direct (1) action *)
  mix_par  : BOOL; (* Mixed (0) or parallel (1) PID *)
  aw_type  : BOOL; (* Standard velocty algorithm (0) or smoothed anti-windup mecanism (1) *)
  en_rcpy  : BOOL; (* Validation of RCPY input *)
  kp       : REAL; (* Proportional gain in physical units *)
  ti       : TIME; (* Reset time in seconds *)
  td       : TIME; (* Rate time in seconds *)
  kd       : REAL; (* Transitory deviation gain *)
  pv_dev   : BOOL; (* Derivative action on PV (0) or DEV (1) *)
  bump     : BOOL; (* Change to auto mode without (0) or with (1) bump *)
  dband    : REAL; (* Dead band on the deviation in physical units *)
  gain_kp  : REAL; (* Proportional action weight inside the dead band *)
  ovs_att  : REAL; (* Overshoot attenuation *)
  outbias  : REAL; (* Manual reset *)
  out_min  : REAL; (* Output lower limit (in automatic mode) *)
  out_max  : REAL; (* Output higher limit (in automatic mode) *)
  outrate  : REAL; (* Output rate of change limit in output units per second (inhibited when OUTRATE = 0) *)
  ff_inf   : REAL; (* FF scale lower limit *)
  ff_sup   : REAL; (* FF scale higher limit *)
  otff_inf : REAL; (* OUT_FF scale lower limit *)
  otff_sup : REAL; (* OUT_FF scale higher limit *)
  END_STRUCT;

Info_PIDFF :   (* Information parameter *)
 STRUCT
  dev      : REAL; (* Deviation PV - SP *)
  out_ff   : REAL; (* Feedforward action *)
```

table continued...

Datatypes from Library CONT_CTL

```
 END_STRUCT;

(* PI_B *)

Para_PI_B :  (* Parameters type *)
 STRUCT
  id       : UINT; (* Reserved for AUTOTUNE *)
  pv_inf   : REAL; (* PV scale lower limit *)
  pv_sup   : REAL; (* PV scale higher limit *)
  out_inf  : REAL; (* OUT scale lower limit *)
  out_sup  : REAL; (* OUT scale higher limit *)
  rev_dir  : BOOL; (* Reverse (0) or direct (1) action *)
  en_rcpy  : BOOL; (* Validation of RCPY input *)
  kp       : REAL; (* Proportional gain in physical units *)
  ti       : TIME; (* Reset time in seconds *)
  dband    : REAL; (* Dead band on the deviation in physical units *)
  outbias  : REAL; (* Manual reset *)
  END_STRUCT;

(* SP_SEL *)

Para_SP_SEL :   (* Parameters type *)
 STRUCT
  sp_min  : REAL; (* SP scale lower limit *)
  sp_max  : REAL; (* SP scale higher limit *)
  bump : BOOL; (* The changeover from remote to local setpoint is bumpless (0) or with bump by restoration of the previous local
setpoint (1) *)
  track : BOOL; (* At 1 : if the controller is in manual mode, the setpoint is set to PV *)
  rate : REAL; (* Setpoint slew rate limit in the case of setpoint changeover from remote to local setpoint. If not 0 : bumpless
changeover (unit : 1/s) *)
 END_STRUCT;

(* SERVO *)

Para_SERVO :   (* Parameters type *)
 STRUCT
  en_rcpy : BOOL; (* AT 1 : functioning with feed back *)
  rcpy_rev: BOOL; (* RCPY direct (0) ; RCPY reversed (1) *)
  t_motor : TIME; (* Time to cover the full scale range *)
  t_mini  : TIME; (* Minimum pulse duration if no feed back *)
 END_STRUCT;

(* AUTOTUNE *)

Para_AUTOTUNE:    (* Parameters type *)
    STRUCT
  step_ampl: REAL;     (* Output step value *)
  tmax: TIME;          (* Duration of steps *)
  perf: REAL;             (* Performance criterion *)
  plant_type: WORD;      (* Type of plant *)
    END_STRUCT;
```

table continued...

Datatypes from Library CONT_CTL

```
Info_AUTOTUNE:    (* Information parameters *)
    STRUCT
  diag: UDINT;          (* Diagnostic word *)
  p1_prev: REAL;         (* Previous value of parameter 1 *)
  p2_prev: REAL;           (* Previous value of parameter 2 *)
  p3_prev: REAL;         (* Previous value of parameter 3 *)
  p4_prev: REAL;          (* Previous value of parameter 4 *)
  p5_prev: REAL;           (* Previous value of parameter 5 *)
  p6_prev: REAL;           (* Previous value of parameter 6 *)
    END_STRUCT;


(* MULDIV_W *)

Para_MULDIV_W :  (* parameters type *)
 STRUCT
  k: REAL; (* Weight of the calculation *)
  c1: REAL; (* Offset of the first input *)
  c2: REAL; (* Offset of the second input *)
  c3: REAL; (* Offset of the third input *)
  c4: REAL; (* Offset of the result *)
    END_STRUCT;

(* SPLRG *)

Para_SPLRG :  (* parameters type *)
 STRUCT
  out1_th1: REAL; (* Input value for OUT1 = out1_inf *)
  out1_th2: REAL; (* Input value for OUT1 = out1_sup *)
  out1_inf: REAL; (* Low limit of OUT1 *)
  out1_sup: REAL; (* High limit of OUT1 *)
  out2_th1: REAL; (* Input value for OUT2 = out2_inf *)
  out2_th2: REAL; (* Input value for OUT2 = out2_sup *)
  out2_inf: REAL; (* Low limit of OUT2 *)
  out2_sup: REAL; (* High limit of OUT2 *)
 END_STRUCT;

(* globally used structures for CLC_PRO *)

Mode_MH  : STRUCT
              man  : BOOL;          (* Manual mode *)
              halt : BOOL;          (* Halt mode   *)
           END_STRUCT;


Stat_MAXMIN : STRUCT
                 qmax : BOOL;       (* '1':  Y >= Maximum *)
                 qmin : BOOL;       (* '1':  Y <= Minimum *)
              END_STRUCT;
```

table continued...

Datatypes from Library CONT_CTL

```
(*  VLIM  *)

Para_VLIM: STRUCT
             rate : REAL;          (* Maximum velocity   *)
             ymax : REAL;          (* Max. output limit  *)
             ymin : REAL;          (* Min. output limit  *)
           END_STRUCT;


(*  PWM1   *)

Para_PWM1 : STRUCT
             t_period : TIME;        (* timelapse between impulses in sec   *)
             t_min    : TIME;        (* Minimum time for set impulse in sec *)
             in_max   : REAL;        (* Range for X (0..x_max)              *)
           END_STRUCT;

(* ALIM *)

Para_ALIM : STRUCT
              max_v : REAL;        (* Maximum velocity          *)
              max_a : REAL;        (* Max. acceleration rate    *)
            END_STRUCT;

(*  PCON3   *)


Para_PCON3 : STRUCT
               gain    : REAL;     (* Feedback gain                *)
               lag_neg : TIME;     (* Feedback time constant       *)
               lag_pos : TIME;     (* Feedback time constant       *)
               hys     : REAL;     (* Hysteresis                   *)
               db      : REAL;     (* Non sensitive zone (deadband) *)
               xf_man  : REAL;     (* feedback reset value         *)
             END_STRUCT;

(*  SCON3   *)

Para_SCON3 : STRUCT
               gain   : REAL;      (* Proportional gain      *)
               ti     : TIME;      (* Adjustment time        *)
               t_proc : TIME;      (* Time constant of value *)
               hys    : REAL;      (* Hysteresis             *)
               db     : REAL;      (* Non sensitive zone     *)
             END_STRUCT;

(*  DERIV  *)

Para_DERIV : STRUCT
               gain : REAL;        (* Gain     *)
```

table continued...

Datatypes from Library CONT_CTL

```
              lag  : TIME;        (* time lag *)
            END_STRUCT;

(*  INTEG  *)

Para_INTEG : STRUCT
              gain : REAL;        (* Integral gain        *)
              ymax : REAL;        (* Maximum output limit *)
              ymin : REAL;        (* Minimum output limit *)
            END_STRUCT;

(*  COMP_PID  *)

Mode_COMP_PID : STRUCT           (* Controlblock for KPID                    *)
              r       : BOOL;    (* reset mode  (1=Reset,  Y=YRESET)         *)
              man     : BOOL;    (* Manual mode (1=Manual, Y=YMAN)           *)
              halt    : BOOL;    (* Halt mode   (1=Halt,   Y=unchanged)      *)
              cascade : BOOL;    (* cascade mode(1=cascade)                  *)
              en_p    : BOOL;    (* 1= P-term on                             *)
              en_i    : BOOL;    (* 1= I-term on                             *)
              en_d    : BOOL;    (* 1= D-term on                             *)
              d_on_pv : BOOL;    (* Differential term works on PV (=1)       *)
                                 (*                           on ERR(=0)     *)
              halt_aw : BOOL;    (* 1= Antiwindup Halt, 0= Antiwindup Reset *)
              bump    : BOOL;    (* 0= bumpless mode change                  *)
              ymanc   : BOOL;    (* 1= YMAN nachfuehren                      *)
            END_STRUCT;

Para_COMP_PID : STRUCT           (* KPID Parameter Block                *)
              gain     : REAL;   (* Proportional gain                   *)
              ti       : TIME;   (* time adjustment constant            *)
              td       : TIME;   (* Suspension time constant            *)
              td_lag   : TIME;   (* time lag constant                   *)
              db       : REAL;   (* Non-sensitive zone                  *)
              gain_red : REAL;   (* gain reduction in non-sensitive zone *)
              rate_sp  : REAL;   (* Increment-limit for setpoint        *)
              rate_man : REAL;   (* Increment-limit for manual setpoint  *)
              ymax     : REAL;   (* upperlimit for Y                    *)
              ymin     : REAL;   (* lowerlimit for Y                    *)
              delt_aw  : REAL;   (* Limit extension for Antiwindup      *)
            END_STRUCT;

Stat_COMP_PID : STRUCT
              st_r       : BOOL;      (* "1" : KPID in reset mode     *)
              st_man     : BOOL;      (* "1" : KPID in manual mode    *)
              st_halt    : BOOL;      (* "1" : KPID in halt mode      *)
              st_auto    : BOOL;      (* "1" : KPID in automatic mode *)
              st_cascade : BOOL;      (* "1" : KPID in cascade mode   *)
              st_max     : BOOL;      (* "1" : Y >= ymax              *)
              st_min     : BOOL;      (* "1" : Y <= ymin              *)
            END_STRUCT;
```

table continued...

Datatypes from Library CONT_CTL

```
(*   PWM   *)

Para_PWM : STRUCT
             t_period : TIME;        (* timelapse between impulses in sec   *)
             t_pause  : TIME;        (* timelapse before braking in sec     *)
             t_brake  : TIME;        (* Braking Period in sec               *)
             t_min    : TIME;        (* Minimum time for set impulse in sec *)
             t_max    : TIME;        (* Maximum time for set impulse in sec *)
             up_pos   : REAL;        (* Upperlimit for positive X           *)
             up_neg   : REAL;        (* Upperlimit for negative X           *)
           END_STRUCT;


(*   PDM    *)

Para_PDM : STRUCT
             t_on      : TIME;       (* Length of impulse in sec        *)
             t_pause   : TIME;       (* timelapse before braking in sec *)
             t_brake   : TIME;       (* Braking period in sec           *)
             pos_up_x  : REAL;       (* Upperlimit for positive X       *)
             pos_t_min : TIME;       (* Minimum period for open         *)
             pos_lo_x  : REAL;       (* lowerlimit for positive X       *)
             pos_t_max : TIME;       (* Maximum period for open         *)
             neg_up_x  : REAL;       (* Upperlimit for negative X       *)
             neg_t_min : TIME;       (* Minimum period for closed       *)
             neg_lo_x  : REAL;       (* lowerlimit for negative X       *)
             neg_t_max : TIME;       (* Maximum period for closed       *)
           END_STRUCT ;

(*  PD_or_PI  *)

Para_PD_or_PI : STRUCT
              trig_err : REAL; (* Switch value from PD to PI Controller     *)
              gain_d   : REAL; (* Differential Gain                         *)
              td       : TIME; (* Derivative Time constant for PD controller*)
              td_lag   : TIME; (* Lag Time for derivative term PD controller*)
              gain_i   : REAL; (* Integral Gain                             *)
              ti       : TIME; (* Adjustment Time constant for PI controller*)
              ymax     : REAL; (* Maximum output limit                      *)
              ymin     : REAL; (* Minimum output limit                      *)
            END_STRUCT;



(*  LEAD_LAG  *)

Para_LEAD_LAG : STRUCT
                  gain : REAL;    (* Gain                                 *)
                  lead : TIME;    (* time constant for differential term *)
```

table continued...

Datatypes from Library CONT_CTL

```
                lag  : TIME;    (* timelag constant                    *)
              END_STRUCT;

(*  PI   *)

Para_PI : STRUCT
             gain : REAL;             (* Proportional gain *)
      ti   : TIME;             (* Time Adjustment   *)
      ymax : REAL;             (* Maximum Output    *)
      ymin : REAL;             (* Minimum Output    *)
          END_STRUCT;


(*  PID   *)

Mode_PID : STRUCT
              man    : BOOL;          (*  Manual mode                 *)
              halt   : BOOL;          (*  Halt mode                   *)
              en_p   : BOOL;          (*  Enable proportional term    *)
              en_i   : BOOL;          (*  Enable integral term        *)
              en_d   : BOOL;          (*  Enable differential term    *)
              d_on_pv: BOOL;          (*  Differential term works on PV*)
           END_STRUCT;

Para_PID : STRUCT
        gain     : REAL;        (* Proportional gain               *)
              ti       : TIME;        (* Adjustment time constant        *)
              td       : TIME;        (* Suspension time constant        *)
              td_lag   : TIME;        (* Time delay for differential term *)
              ymax     : REAL;        (* Maximum output limit            *)
              ymin     : REAL;        (* Minimum output limit            *)
           END_STRUCT;

(*  PID_P   *)

Mode_PID_P : STRUCT
               man    : BOOL;   (* Manual mode                      *)
               halt   : BOOL;   (* Halt mode                        *)
               d_on_pv: BOOL;   (* Differential term works on PV(=1) *)
                                (*                          on ERR(=0)*)
               revers : BOOL;   (* system deviation                 *)
     END_STRUCT;

Para_PID_P : STRUCT
               kp     : REAL;          (* Proportional gain  *)
               ki     : REAL;          (* Integral gain      *)
               kd     : REAL;          (* Differential gain  *)
               td_lag : TIME;          (* lag time of D-term *)
        ymax   : REAL;          (* upperlimit for Y   *)
               ymin   : REAL;          (* lowerlimit for Y   *)
           END_STRUCT;
```

table continued...

Datatypes from Library CONT_CTL

```
(*   PI-P and P-PI    *)

Mode_PIP : STRUCT
             man  : BOOL;            (* 1 = manual mode  *)
             halt : BOOL;            (* 1 = halt mode    *)
             fix  : BOOL;            (* 1 = fix mode     *)
           END_STRUCT;

Para_PIP : STRUCT
             gain1   : REAL;    (* Proportional gain for Main Controller *)
             t1      : TIME;    (* Time Adjustment for PI-Controller     *)
             gain2   : REAL;    (* Proportional gain for Sub Controller  *)
             ymax    : REAL;    (* Maximum Output                        *)
             ymin    : REAL;    (* Minimum Output                        *)
           END_STRUCT;


(*  LAG  *)

Para_LAG : STRUCT
             gain : REAL;           (* Gain     *)
             lag  : TIME;           (* Time-Lag *)
           END_STRUCT;

(*  LAG2  *)

Para_LAG2 : STRUCT
              gain : REAL;         (* Gain           *)
              dmp  : REAL;         (* damping factor  *)
              freq : REAL;         (* cycle frequence *)
            END_STRUCT;

(*  FGEN  *)

Para_FGEN: STRUCT
             func_no    : INT;      (* Function number (1-8)     *)
             amplitude  : REAL;     (* amplitude                 *)
             halfperiod : TIME;     (* Halfperiod length         *)
           t_off      : TIME;     (* switchoff time constant   *)
             t_rise     : TIME;     (* rising time               *)
             t_acc      : TIME;     (* acceleration period       *)
             unipolar   : BOOL;     (* uni- or bi-polar function *)
           END_STRUCT;

(*  PCON2  *)

Para_PCON2 : STRUCT
               gain    : REAL;       (* Feedback gain          *)
               lag_neg : TIME;       (* Feedback time constant *)
```

table continued...

Datatypes from Library CONT_CTL

```
              lag_pos : TIME;       (* Feedback time constant *)
              hys     : REAL;       (* Hysteresis             *)
              xf_man  : REAL;       (* manual feedback value  *)
            END_STRUCT;

(*  QPWM   *)

Para_QPWM : STRUCT
              t_period : TIME;        (* timelapse between impulses in sec   *)
              t_min    : TIME;        (* Minimum time for set impulse in sec *)
              x_max    : REAL;        (* Range for X (0..x_max)              *)
           END_STRUCT;


END_TYPE
```

Datatypes from Library DIAGNO

```
TYPE

  PCV_IN:
    STRUCT
      auftrag:    INT;
      parameter:  INT;
    END_STRUCT;

  PCV_OUT:
    STRUCT
      response:      INT;
      counter:       INT;
      st_feld:       ARRAY [1..64] OF INT;
      laenge:        INT;
      klasse:        INT;
      typ:           INT;
      station:       INT;
      q_status:      INT;
      m_status:      INT;
      t_kommt:       DINT;
      t_kommt_ms:    INT;
      blob_id:       INT;
      t_geht:        DINT;
      t_geht_ms:     INT;
      scan_index:    INT;
      blob_adr:      DINT;
      blob_gen_time: DINT;
      trans_id:      INT;
      anz_signale:   INT;
      fehler_liste:  ARRAY [1..20] OF INT;
      add_info:      ARRAY [1..10] OF INT;
    END_STRUCT;

END_TYPE
```

Datatypes from Library EXPERTS

```
TYPE

  (* ----------------- general sub data types: ------------------------- *)

  Exp_Status:  (* error status of transfer *)
    STRUCT
      ErrFlag1:    BOOL;     (* TRUE: epxert not pluged, wrong expert
                                DPM-access-error *)
      ErrFlag2:    BOOL;     (* TRUE: Bit 7 of DPM Identcode is set;
                                logical DMP-access-error *)
      UserStatus:  WORD;     (* status of expert *)
      ErrNo:       WORD;     (* errornumber *)
    END_STRUCT;

  (* ----------------- data blocks, explicitly typed: ------------------ *)

  ByteArr2:        ARRAY [1..2] OF BYTE;    (* 2 bytes *)
  ByteArr4:        ARRAY [1..4] OF BYTE;    (* 4 bytes *)
  ByteArr5:        ARRAY [1..5] OF BYTE;    (* 5 bytes *)
  ByteArr8:        ARRAY [1..8] OF BYTE;    (* 8 bytes *)
  ByteArr9:        ARRAY [1..9] OF BYTE;    (* 9 bytes *)
  ByteArr12:       ARRAY [1..12] OF BYTE;   (* block of 12 bytes *)
  ByteArr36:       ARRAY [1..36] OF BYTE;   (* block of 36 bytes *)
  IntArr12:        ARRAY [1..12] OF INT;    (* block of 12 integers *)
  WordArr9:        ARRAY [1..9] OF WORD;    (* block of 9 words *)
  WordArr11:       ARRAY [1..11] OF WORD;   (* block of 11 words *)
  WordArr26:       ARRAY [1..26] OF WORD;   (* 26 words *)
  WordArr31:       ARRAY [1..31] OF WORD;   (* 31 words *)
  WordArr256:      ARRAY [1..256] OF WORD;  (* 256 words *)
  DIntArr5:        ARRAY [1..5] OF DINT;    (* 5 double integers *)
  DIntArr12:       ARRAY [1..12] OF DINT;   (* block of 12 double integers *)
  DIntArr32:       ARRAY [1..32] OF DINT;   (* 32 double integers *)
  DIntArr84:       ARRAY [1..84] OF DINT;   (* block of 84 double integers *)
  DIntArr125:      ARRAY [1..125] OF DINT;  (* block of 125 double integers *)

  (* ---------------- ESI specific data structures: -------------------- *)

  DPM_Time:  (* time stamp *)
    STRUCT
      sync:        BOOL;     (* sync clock, pos. edge by hour or telegr. *)
      ms:          WORD;     (* milli-seconds *)
      min:         BYTE;     (* minutes; (min AND 16#80) = not valid *)
      hour:        BYTE;     (* hours; (hour AND 16#80) = summer time *)
      day:         BYTE;     (* days of week:  (day AND 16#E0) =  1..7
                                days of month: (day AND 16#1F) =  1..31 *)
      mon:         BYTE;     (* month *)
      year:        BYTE;     (* year *)
    END_STRUCT;

  ESI_Status:  (* Status of ESI *)
    STRUCT
      wdog:        BYTE;     (* expert watchdog-counter *)
```

table continued...

Datatypes from Library EXPERTS

```
    stat1:      BYTE;     (* error status 1 *)
    stat2:      BYTE;     (* error status 2 *)
    stat3:      BYTE;     (* error status 3 *)
    slot:       WORD;     (* slot number *)
    user:       WORD;     (* virtual slot number *)
    esitime:    DPM_Time; (* time stamp *)
  END_STRUCT;

ESI_Block:  (* datas of ESI *)
  STRUCT
    func:       BYTE;     (* function *)
    mux:        WORD;     (* distribution *)
    attr:       BYTE;     (* attribut *)
    cause:      BYTE;     (* reason *)
    station:    WORD;     (* station number *)
    object:     WORD;     (* objekt number *)
    data:       ByteArr9; (* data bytes *)
  END_STRUCT;

ESI_BlockArr14: ARRAY[1..14] OF ESI_Block;    (* used as sub type *)

ESI_InOut:  (* ESI input / output data structure *)
  STRUCT
    tstat:      BYTE;     (* transfer status, handshake *)
    blocks:     BYTE;     (* number of used blocks *)
    res:        BYTE;     (* reserved *)
    block:      ESI_BlockArr14;     (* data block *)
  END_STRUCT;

ESI_In:  (* ESI - input data, cyclic transmited, cycle from I/O-Map *)
  STRUCT
    in:         ESI_InOut;     (* ESI input data *)
    esi:        ESI_Status;
    dummy:      BYTE;          (* supplement to modulo 16 *)
    slot:       Exp_Status;
  END_STRUCT;

ESI_OUT:   (* ESI - output data *)
  STRUCT   (* or: ESI_InOut; alias data types currently not supported *)
    tstat:      BYTE;     (* transfer status, handshake *)
    blocks:     BYTE;     (* number of used blocks *)
    res:        BYTE;     (* reserved *)
    block:      ESI_BlockArr14;     (* data block *)
  END_STRUCT;


(* ---------------- NOA611 specific data structures: ----------------- *)

NOA1_In:  (* input data,  mode 1 *)
  STRUCT
    status:     WORD;          (* status and error flags *)
```

table continued...

Datatypes from Library EXPERTS

```
    busy:       WORD;          (* busy bits of INTERBUS S *)
    retrn:      WORD;          (* return bits of INTERBUS S *)
    diag:       WORD;          (* diagnostic word of INTERBUS S *)
    data:       WordArr26;     (* IBS input data *)
  END_STRUCT;

NOA2_In:  (* input data,  mode 2 *)
  STRUCT
    status:     WORD;          (* status and error flags *)
    busy:       WORD;          (* busy bits of INTERBUS S *)
    retrn:      WORD;          (* return bits of INTERBUS S *)
    diag:       WORD;          (* diagnostic word of INTERBUS S *)
    ind:        WORD;          (* indication word of INTERBUS S *)
    data:       WordArr256;    (* IBS input data *)
    reserved:   ARRAY[1..6] OF WORD;    (* reserved *)
  END_STRUCT;

NOA1_Out:  (* output data,  mode 1 *)
  STRUCT
    active:     WORD;          (* active bits of INTERBUS S *)
    data:       WordArr31;     (* IBS output data *)
  END_STRUCT;

NOA2_Out:  (* output data,  mode 2 *)
  STRUCT
    active:     WORD;          (* active bits of INTERBUS S *)
    data:       WordArr256;    (* IBS output data *)
    reserved:   ARRAY[1..7] OF WORD;     (* reserved *)
  END_STRUCT;


(* ---------------- MMB / MMD data type structures: ------------------ *)

MMBD_Commands:  (* MMB/MMD output data *)
  STRUCT
    mode:       BYTE;     (* new operating mode for MMB/D *)
    commands:   BYTE;     (* commands for axisgroup 1 and 2 *)
    specCom:    BYTE;     (* special commands *)
    dirBits:    BYTE;     (* direction bits for manual + ref. mode *)
    progNoAG1:  BYTE;     (* program number for automatic mode group 1 *)
    progNoAG2:  BYTE;     (* program number for automatic mode group 2 *)
    userDef1:   WORD;     (* user defined *)
    userDef2:   WORD;     (* user defined *)
    counter:    BYTE;     (* transfer counter *)
    dataType:   BYTE;     (* data type for optional data *)
    optData:    WordArr11;     (* data according data type *)
  END_STRUCT;

MMBD_ActDat:  (* MMB/MMD input data *)
  STRUCT
    xStat:      BYTE;     (* status X axis *)
```

table continued...

Datatypes from Library EXPERTS

```
    yStat:       BYTE;     (* status Y axis *)
    zStat:       BYTE;     (* status Z axis *)
    cStat:       BYTE;     (* status C axis *)
    errNo:       WORD;     (* error number *)
    mode:        BYTE;     (* actual operating mode for MMB/D *)
    vpStat:      BYTE;     (* status of automatic mode *)
    progNoAG1:   BYTE;     (* actual program number group 1 *)
    progNoAG2:   BYTE;     (* actual program number group 2 *)
    userDef1:    WORD;     (* user defined *)
    userDef2:    WORD;     (* user defined *)
    counter:     BYTE;     (* transfer counter *)
    dataType:    BYTE;     (* data type for optional data *)
    optData:     WordArr9; (* data according DataType *)
  END_STRUCT;

MMBD_PPAR:  (* MMB/MMD PPAR data *)
  STRUCT
    pq:     DIntArr84;     (* position parameter *)
    pf:     DIntArr12;     (* speed parameter *)
    pl:     ByteArr36;     (* label parameter *)
    pt:     IntArr12;      (* dwell time parameter *)
    pv:     IntArr12;      (* voltage parameter *)
    po:     ByteArr12;     (* dig. output parameter *)
    pi:     ByteArr12;     (* dig. input parameter *)
  END_STRUCT;

(* ---------------- EHC 105 specific data structures: ---------------- *)

EHC105_In:  (* actual values *)
  STRUCT
    error:       BYTE;     (* error flags *)
    final:       BYTE;     (* final signals *)
    preced1:     BYTE;     (* preceded signals 1 *)
    preced2:     BYTE;     (* preceded signals 2 *)
    actual:      DIntArr5; (* actual values *)
  END_STRUCT;

EHC105_Out:  (* setpoint values *)
  STRUCT
    quit:        BYTE;     (* quit bits *)
    control:     ByteArr5; (* control bits *)
    final:       DintArr5; (* final values *)
  END_STRUCT;

(* ------------------ ERT specific data structures: ------------------ *)

ERT_Status:  (* status of ERT *)
  STRUCT
    wdog:        BYTE;     (* expert watchdog-counter *)
    stat1:       BYTE;     (* error status 1:  - TE - A -  -  FP FW
                              TE = time_normal error
```

table continued...

Datatypes from Library EXPERTS

```
                              A  = master watchdog error
                              FP = missing parameter
                              FW = firmware-error                *)
    stat2:       BYTE;     (* not used *)
    stat3:       BYTE;     (* error status 3:  - TU - - S  T  P  PF
                              TU = time invalid
                              S  = slot number error
                              T  = user number error
                              P  = parameter invalid
                              PF = buffer overflow               *)
  END_STRUCT;

ERT_TimeStamp:  (* time stamp *)
  STRUCT
    group:       BYTE;     (* input group *)
    in:          ByteArr2; (* input 1 .. 16 *)
    ms:          WORD;     (* milli-seconds *)
    min:         BYTE;     (* minutes; (min AND 16#80) = not valid *)
    hour:        BYTE;     (* hours; (hour AND 16#80) = summer time *)
    day:         BYTE;     (* days of week:  (day AND 16#E0) =  1..7
                              days of month: (day AND 16#1F) =  1..31 *)
  END_STRUCT;

ERT_TimeStampArr6: ARRAY [1..6] OF ERT_TimeStamp;

ERT_IcField:  (* actual value field 1, inputs and counter values *)
  STRUCT
    tstat:       BYTE;     (* transfer status, handshake *)
    user:        BYTE;     (* virtual slot number *)
    in:          ByteArr4; (* inputs 1 ... 32 *)
    reserved:    ByteArr4; (* reserved *)
    count:       DIntArr32;     (* counter value *)
  END_STRUCT;

ERT_TsField:  (* actual value field 2, time stamped data *)
  STRUCT
    tstat:       BYTE;     (* transfer status, handshake *)
    user:        BYTE;     (* virtual slot number *)
    ts:          ERT_TimeStampArr6;     (* block of time stamps *)
  END_STRUCT;

ERT_In:  (* ERT input datas, cyclic transmited, cycle from I/O Map *)
  STRUCT
    ic:          ERT_IcField;   (* input and counter field *)
    ts:          ERT_TsField;   (* time stamped data field *)
    ert:         ERT_Status;    (* expert error status *)
    erttime:     DPM_Time;      (* time stamp *)
    dummy:       ByteArr8;      (* supplement to modulo 16 *)
    slot:        Exp_Status;    (* transfer error status *)
  END_STRUCT;
```

table continued...

Datatypes from Library EXPERTS

```
  (* ---------------- ERT_TIME specific data structure: ---------------- *)

  SlotStr:         ARRAY [1..32] OF BYTE;  (* 32 slots *)


  (* -------------- ERT854 10 specific data structures: ---------------- *)

   ERT_10_TTag:    STRUCT
            user:   BYTE;  (* user number [module No] *)
            input:  BYTE;  (* input type + input No *)
            in:     BYTE;  (* input value 1 .. 8 *)
            ms:     WORD;  (* milli-seconds *)
            min:    BYTE;  (* minutes; (min AND 16#80) = not valid *)
            hour:   BYTE;       (* hours; (hour AND 16#80) = summer time*)
            day:    BYTE;  (* days of week:  (day AND 16#E0) =  1..7
                    days of month: (day AND 16#1F) =  1..31 *)
   END_STRUCT;

   UDIntArr32:   ARRAY [1..32] OF UDINT;
   BoolArr32:   ARRAY [1..32] OF BOOL;


(* ------------------------------------------------------------ *)
(* mvb           Derived datatypes                              *)
(* ------------------------------------------------------------ *)
(* MVB_xxxxx: for MVB_258A modul                                *)
(* MVB_STATUS for the MVB_IN EFB necessary                      *)
 MVB_STATUS:  ARRAY [1..32]   OF WORD;
 MVB_INPUT :  ARRAY [1..1024] OF WORD;
 MVB_OUTPUT:  ARRAY [1..1024] OF WORD;
(* ------------------------------------------------------------ *)


(* ------------------------------------------------------------ *)
(* simtsx.dty       Derived datatypes definition file:          *)
(* ------------------------------------------------------------ *)

SIMAC_PARAM : STRUCT
   NOMBRE     : UINT;   (* Number of variables to copy *)
   OFF_SOURCE : UINT;   (* Offset to first 4x register *)
   OFF_DEST   : UINT;   (* Offset to first 1x ou 3x register*)
       END_STRUCT;

(* ------------------------------------------------------------ *)

END_TYPE
```

Datatypes from Library FUZZY

```
TYPE
FUZ_MD_INT:
 STRUCT
  n: INT;
  term1: INT;
  term2: INT;
  term3: INT;
  term4: INT;
  term5: INT;
  term6: INT;
  term7: INT;
  term8: INT;
  term9: INT;
 END_STRUCT;

FUZ_MD_REAL:
 STRUCT
  n: INT;
  term1: REAL;
  term2: REAL;
  term3: REAL;
  term4: REAL;
  term5: REAL;
  term6: REAL;
  term7: REAL;
  term8: REAL;
  term9: REAL;
 END_STRUCT;

END_TYPE
```

Datatypes from Library HANDTABL

```
(*-------------------------------------------*)
(*                                           *)
(*  Strukturen fuer Handtableaubedienung     *)
(*                                           *)
(*  UDS:                                     *)
(*  BTMINFO:                                 *)
(*  BLD2PLC5:                                *)
(*                                           *)
(*-------------------------------------------*)

TYPE

(* *)
UDS:
 STRUCT
  symType:    INT;
  varSize:    INT;
  physOffs:   DINT;
  selsym:     INT;
  ref:        INT;
 END_STRUCT;

(* *)
BTMINFO:
 STRUCT
    UDS_left: UDS;
    UDS_right: UDS;
    HmSmMode: INT;
    SoftButton_left: BYTE;
    SoftButton_right: BYTE;
 END_STRUCT;


(* *)
BLD2PLC5:
 STRUCT
    stamp:   UDINT;
    alive:   UINT;
    mode:    UINT;
    reserve: UDINT;
    BTM:     ARRAY [1..5] OF BTMINFO;
 END_STRUCT;

END_TYPE
```

Datatypes from Library LIB984

```
(* library.dty       Derived datatypes definition file:          *)

(* You should edit this file, if you need some derived datatypes *)
(* in conjunction with EFBs of this library.                     *)
(* Syntax is given by IEC 1131-3 textual language format         *)


TYPE

FIFOQUEUE:    ARRAY [0..1999] OF BOOL;

DLOG_CTRL: STRUCT
           status:    WORD;
           operation: WORD;
           window:    WORD;
           offset:    WORD;
           count:     WORD;
           END_STRUCT;

END_TYPE
```

Datatypes from Library SYSTEM

```
TYPE

PLCSTATE: STRUCT
word1 : WORD;
word2 : WORD;
word3 : WORD;
word4 : WORD;
word5 : WORD;
word6 : WORD;
word7 : WORD;
word8 : WORD;
word9 : WORD;
word10 : WORD;
word11 : WORD;
END_STRUCT;

RIOSTATE: STRUCT
word1 : WORD;
word2 : WORD;
word3 : WORD;
word4 : WORD;
word5 : WORD;
word6 : WORD;
word7 : WORD;
word8 : WORD;
word9 : WORD;
word10 : WORD;
word11 : WORD;
word12 : WORD;
word13 : WORD;
word14 : WORD;
word15 : WORD;
word16 : WORD;
word17 : WORD;
word18 : WORD;
word19 : WORD;
word20 : WORD;
word21 : WORD;
word22 : WORD;
word23 : WORD;
word24 : WORD;
word25 : WORD;
word26 : WORD;
word27 : WORD;
word28 : WORD;
word29 : WORD;
word30 : WORD;
word31 : WORD;
word32 : WORD;
word33 : WORD;
word34 : WORD;
word35 : WORD;
```

table continued...

Datatypes from Library SYSTEM

```
word36 : WORD;
word37 : WORD;
word38 : WORD;
word39 : WORD;
word40 : WORD;
word41 : WORD;
word42 : WORD;
word43 : WORD;
word44 : WORD;
word45 : WORD;
word46 : WORD;
word47 : WORD;
word48 : WORD;
word49 : WORD;
word50 : WORD;
word51 : WORD;
word52 : WORD;
word53 : WORD;
word54 : WORD;
word55 : WORD;
word56 : WORD;
word57 : WORD;
word58 : WORD;
word59 : WORD;
word60 : WORD;
word61 : WORD;
word62 : WORD;
word63 : WORD;
word64 : WORD;
word65 : WORD;
word66 : WORD;
word67 : WORD;
word68 : WORD;
word69 : WORD;
word70 : WORD;
word71 : WORD;
word72 : WORD;
word73 : WORD;
word74 : WORD;
word75 : WORD;
word76 : WORD;
word77 : WORD;
word78 : WORD;
word79 : WORD;
word80 : WORD;
word81 : WORD;
word82 : WORD;
word83 : WORD;
word84 : WORD;
word85 : WORD;
word86 : WORD;
```

table continued...

Datatypes from Library SYSTEM

```
word87 : WORD;
word88 : WORD;
word89 : WORD;
word90 : WORD;
word91 : WORD;
word92 : WORD;
word93 : WORD;
word94 : WORD;
word95 : WORD;
word96 : WORD;
word97 : WORD;
word98 : WORD;
word99 : WORD;
word100 : WORD;
word101 : WORD;
word102 : WORD;
word103 : WORD;
word104 : WORD;
word105 : WORD;
word106 : WORD;
word107 : WORD;
word108 : WORD;
word109 : WORD;
word110 : WORD;
word111 : WORD;
word112 : WORD;
word113 : WORD;
word114 : WORD;
word115 : WORD;
word116 : WORD;
word117 : WORD;
word118 : WORD;
word119 : WORD;
word120 : WORD;
word121 : WORD;
word122 : WORD;
word123 : WORD;
word124 : WORD;
word125 : WORD;
word126 : WORD;
word127 : WORD;
word128 : WORD;
word129 : WORD;
word130 : WORD;
word131 : WORD;
word132 : WORD;
word133 : WORD;
word134 : WORD;
word135 : WORD;
word136 : WORD;
word137 : WORD;
```

table continued...

Datatypes from Library SYSTEM

```
word138 : WORD;
word139 : WORD;
word140 : WORD;
word141 : WORD;
word142 : WORD;
word143 : WORD;
word144 : WORD;
word145 : WORD;
word146 : WORD;
word147 : WORD;
word148 : WORD;
word149 : WORD;
word150 : WORD;
word151 : WORD;
word152 : WORD;
word153 : WORD;
word154 : WORD;
word155 : WORD;
word156 : WORD;
word157 : WORD;
word158 : WORD;
word159 : WORD;
word160 : WORD;
END_STRUCT;

DIOSTATE: STRUCT
word1 : WORD;
word2 : WORD;
word3 : WORD;
word4 : WORD;
word5 : WORD;
word6 : WORD;
word7 : WORD;
word8 : WORD;
word9 : WORD;
word10 : WORD;
word11 : WORD;
word12 : WORD;
word13 : WORD;
word14 : WORD;
word15 : WORD;
word16 : WORD;
word17 : WORD;
word18 : WORD;
word19 : WORD;
word20 : WORD;
word21 : WORD;
word22 : WORD;
word23 : WORD;
word24 : WORD;
word25 : WORD;
```

table continued...

Datatypes from Library SYSTEM

```
word26 : WORD;
word27 : WORD;
word28 : WORD;
word29 : WORD;
word30 : WORD;
word31 : WORD;
word32 : WORD;
word33 : WORD;
word34 : WORD;
word35 : WORD;
word36 : WORD;
word37 : WORD;
word38 : WORD;
word39 : WORD;
word40 : WORD;
word41 : WORD;
word42 : WORD;
word43 : WORD;
word44 : WORD;
word45 : WORD;
word46 : WORD;
word47 : WORD;
word48 : WORD;
word49 : WORD;
word50 : WORD;
word51 : WORD;
word52 : WORD;
word53 : WORD;
word54 : WORD;
word55 : WORD;
word56 : WORD;
word57 : WORD;
word58 : WORD;
word59 : WORD;
word60 : WORD;
word61 : WORD;
word62 : WORD;
word63 : WORD;
word64 : WORD;
word65 : WORD;
word66 : WORD;
word67 : WORD;
word68 : WORD;
word69 : WORD;
word70 : WORD;
word71 : WORD;
word72 : WORD;
word73 : WORD;
word74 : WORD;
word75 : WORD;
word76 : WORD;
```

table continued...

Datatypes from Library SYSTEM

```
word77 : WORD;
word78 : WORD;
word79 : WORD;
word80 : WORD;
word81 : WORD;
word82 : WORD;
word83 : WORD;
word84 : WORD;
word85 : WORD;
word86 : WORD;
word87 : WORD;
word88 : WORD;
word89 : WORD;
word90 : WORD;
word91 : WORD;
word92 : WORD;
word93 : WORD;
word94 : WORD;
word95 : WORD;
word96 : WORD;
word97 : WORD;
word98 : WORD;
word99 : WORD;
word100 : WORD;
word101 : WORD;
word102 : WORD;
word103 : WORD;
word104 : WORD;
word105 : WORD;
word106 : WORD;
END_STRUCT;


END_TYPE
```

Project Datatypes

```
(* testprj.dty   :   Derived datatypes definition file *)
(*                   for the Testprj                   *)

TYPE

OSCILLATION:
  STRUCT
    sine   : INT;
    cosine : INT;
  END_STRUCT;

BOOL_Array5:
  ARRAY [1..5] OF BOOL;   (* block of 5 bits *)

INDICATOR:
  ARRAY [1..8] OF BOOL;   (* block of 8 bits *)

END_TYPE
```

Global Datatypes: does not exist

Variable list (Name: All, Type: All, DataType: All, Sorted by: name)

Variable name	Type	DType	Address	Initial value	Comment	Used
AC_POWER_FAIL	VAR	BOOL	100042			2
AD_ALARMS	IVAR	SECT_CTRL				0
AD_ANTSC_LAL	VAR	BOOL	000022			1
AD_ASTR_LAHH	VAR	BOOL	000024			1
AD_BF_PDAH	VAR	BOOL	000020			1
AD_BF_PDAHH	VAR	BOOL	000021			1
AD_BWR_FAILURE	VAR	BOOL	000023			1
AD_CONT_LAHH	VAR	BOOL	000030			1
AD_DSUMP_LAHH	VAR	BOOL	000031			1
AD_EFF_FAHH	VAR	BOOL	000032			1
AD_EFF_PUMP_FAIL	VAR	BOOL	000029			1
AD_EW_FAILURE	VAR	BOOL	000017			1
AD_EW_PAH	VAR	BOOL	000018			1
AD_POWER_FAIL	VAR	BOOL	000028			1
AD_VGAC_MAH	VAR	BOOL	000026			1
AD_VGAC_PDAH	VAR	BOOL	000025			1
AD_VGAC_TAH	VAR	BOOL	000027			1
AIRSTRIPPER_HH_LEVEL_ALARM	VAR	BOOL	100023			1
AIRSTRIPPER_HH_LEVEL_ALARM_HMI	VAR	BOOL	000506			4
AIRSTRIPPER_HIGH_RH_ALARM	VAR	BOOL	000624			4
AIRSTRIPPER_HIGH_TEMP_ALARM	VAR	BOOL	000623			4
AIRSTRIPPER_RH	VAR	REAL	400104			2
AIRSTRIPPER_RH_TIMER_ACC	VAR	TIME	400210			1
AIRSTRIPPER_RH_TIMER_DN	VAR	BOOL	000622			2
AIRSTRIPPER_TEMP	VAR	REAL	400102			2
AIRSTRIPPER_TEMP_TIMER_ACC	VAR	TIME	400208			1
AIRSTRIPPER_TEMP_TIMER_DN	VAR	BOOL	000621			2
AIRSTR_DIS_RELATIVE_FLOW_PARA	VAR	Para_SCALING	400517			1
in_max	COMP	REAL		32000.0		
out_max	COMP	REAL		1000.0		
AIRSTR_DIS_RELATIVE_FLOW_RAW	VAR	WORD	300024			1
AIR_STRIPPER	IVAR	SECT_CTRL				0
AIR_STRIP_AUTO_HMI	VAR	BOOL	000613			0
ALARM_RESET_PB	VAR	BOOL	000201			27
ALARM_TEST	VAR	BOOL	000697			0
ANALOG	IVAR	SECT_CTRL				0
ANTISCALANT_MAN_START	VAR	BOOL	000700			1
ANTI_SCALENT_PUMP_DISCHARGE_FLOW	VAR	REAL	400142			1
ANTI_SCALENT_PUMP_START	VAR	BOOL	000006			1
ANTI_SCALENT_PUMP_START_HMI	VAR	BOOL	000601			2
ANTI_SCALENT_TANK_LL_ALARM	VAR	BOOL	100025			2
AS_DISCHARGE_BLOWER_RH_RAW	VAR	WORD	300004			1
AS_DISCHARGE_BLOWER_TEMP_PARA	VAR	Para_SCALING	400346			1
in_max	COMP	REAL		32000.0		
out_min	COMP	REAL		-4.0		
out_max	COMP	REAL		167.0		
AS_DISCHARGE_BLOWER_TEMP_RAW	VAR	WORD	300003			1
AS_HIGH_RH_ALARM_SP	VAR	REAL	401028			1
AS_HIGH_TEMP_ALARM_SP	VAR	REAL	401030			1
AS_PUMP_DISCHARGE_FLOW_PARA	VAR	Para_SCALING	400508			1
in_max	COMP	REAL		32000.0		

table continued...

Variable list (Name: All, Type: All, DataType: All, Sorted by: name)

Variable name	Type	DType	Address	Initial value	Comment	Used
out_max	COMP	REAL		100.0		
AS_PUMP_DISCHARGE_FLOW_RAW	VAR	WORD	300023			1
AS_TANK_CONTAINMENT_HH	VAR	BOOL	100024			1
BAGFILTER1_DIFF_PRESS	VAR	REAL	400138			3
BAGFILTER1_DIFF_PRESS_RAW	VAR	WORD	300021			1
BAGFILTER1_PARA	VAR	Para_SCALING	400328			1
in_max	COMP	REAL		32000.0		
out_max	COMP	REAL		30.0		
BAGFILTER2_DIFF_PRESS	VAR	REAL	400140			3
BAGFILTER2_DIFF_PRESS_RAW	VAR	WORD	300022			1
BAGFILTER2_PARA	VAR	Para_SCALING	400337			1
in_max	COMP	REAL		32000.0		
out_max	COMP	REAL		30.0		
BAGFILTER_SCALENT_VGAC	IVAR	SECT_CTRL				0
BF1_PDAHH_206	VAR	BOOL	000688			4
BF1_PDAHH_SP	VAR	REAL	400922	15.0		1
BF1_PDAHH_TACC	VAR	TIME	400926			1
BF1_PDAHH_TDN	VAR	BOOL	000655			2
BF1_PDAH_SP	VAR	REAL	400930	8.0		1
BF1_TIMER_ACC	VAR	TIME	400204			1
BF1_TIMER_DN	VAR	BOOL	000610			2
BF2_PDAHH_208	VAR	BOOL	000689			4
BF2_PDAHH_SP	VAR	REAL	400924	15.0		1
BF2_PDAHH_TACC	VAR	TIME	400928			1
BF2_PDAHH_TDN	VAR	BOOL	000656			2
BF2_PDAH_SP	VAR	REAL	400932	8.0		1
BF2_TIMER_ACC	VAR	TIME	400206			1
BF2_TIMER_DN	VAR	BOOL	000611			2
BLOWER_CTR	VAR	BOOL	000007			2
BLOWER_DISCHARGE_FLOW	VAR	REAL	400144			1
BLOWER_FAILED	VAR	BOOL	100019			1
BLOWER_FAILURE	VAR	BOOL				4
BLOWER_FTS_TACC_SEC	VAR	DINT	401010			1
BLOWER_FTS_TDN	VAR	BOOL	000699			2
BLOWER_FTS_TPRE_SEC	VAR	DINT	401012			1
BLOWER_IN_AUTO	VAR	BOOL	000615			2
BLOWER_IN_MANUAL	VAR	BOOL	000614			2
BLOWER_MANUAL_HMI	VAR	BOOL	000612			2
BLOWER_MANUAL_START_PB	VAR	BOOL	000616			1
BLOWER_ON	VAR	BOOL	100020			1
BLOWER_PAL	VAR	BOOL	100022			1
BLOWER_READY	VAR	BOOL	000680			3
BLOWER_REMOTE	VAR	BOOL	100021			2
BLOWER_RH_PARA	VAR	Para_SCALING	400355			1
in_max	COMP	REAL		32000.0		
out_max	COMP	REAL		100.0		
BLOWER_SD_TACC_SEC	VAR	DINT	400974			1
BLOWER_SD_TPRE_SEC	VAR	DINT	400972	120000		1
BLOWER_SHUTDOWN	VAR	BOOL	000681			2
BLOWER_START_AUTO	VAR	BOOL	000625			2

table continued...

Variable list (Name: All, Type: All, DataType: All, Sorted by: name)

Variable name	Type	DType	Address	Initial value	Comment	Used
BLOWER_START_MANUAL	VAR	BOOL	000618			2
BLOWER_START_TIMER_ACC	VAR	TIME	400212			1
BLOWER_START_TIMER_DN	VAR	BOOL	000626			2
BLOWER_STOP_HMI	VAR	BOOL	000617			0
CONTAINMENT_LAH	VAR	BOOL	000703			2
CONTAINMENT_LAH_DI	VAR	BOOL	100043			4
DAILY_FLOW_TOTAL_STORAGE_01	IVAR	SECT_CTRL				0
DAILY_FLOW_TOTAL_STORAGE_02	IVAR	SECT_CTRL				0
DAILY_FLOW_TOTAL_STORAGE_03	IVAR	SECT_CTRL				0
DISCHARGE_WETWELL_AND_PUMP	IVAR	SECT_CTRL				0
DRAIN_PUMP_ENABLE	VAR	BOOL	000009			1
DRAIN_SUMP_LAHH_235	VAR	BOOL	100037			1
EFF_DAILY_FQ	VAR	DIntArr125	401500			249
EFF_DAILY_FQ_LEQ_TH	VAR	REAL	400936			1
EFF_DAILY_FQ_RET	VAR	REAL	400944			2
EFF_DAILY_TOT_INFO	VAR	Info_TOTALIZ>	400564			3
EFF_DAILY_TOT_MODE	VAR	Mode_TOTALIZ>	400559			1
EFF_DAILY_TOT_PARA	VAR	Para_TOTALIZ>	400553			1
thld	COMP	REAL		56600.0		
cutoff	COMP	REAL		0.2		
EFF_DAILY_TOT_STAT	VAR	WORD	400942			1
EFF_DAILY_TOT_TRI	VAR	REAL	400940			1
EFF_DAILY_TOT_TRS	VAR	BOOL	000659			1
EFF_FIT_FAIL	VAR	BOOL	000702			1
EFF_FIT_FAIL_DI	VAR	BOOL	100045			1
EFF_FQAH	VAR	BOOL	000660			5
EFF_FQH_RESTART	VAR	BOOL	000694			2
EFF_FQ_LEQ_TH	VAR	REAL	400988			1
EFF_FQ_RET	VAR	REAL	400991			0
EFF_PUMP_AUTO_HMI	VAR	BOOL	000628			2
EFF_PUMP_CTR	VAR	BOOL	000008			2
EFF_PUMP_FAIL	VAR	BOOL	000692			4
EFF_PUMP_FAIL_DI	VAR	BOOL	100046			1
EFF_PUMP_FTS_TACC_SEC	VAR	DINT	401026			1
EFF_PUMP_FTS_TDN	VAR	BOOL	000701			2
EFF_PUMP_FTS_TPRE_SEC	VAR	DINT	401024			1
EFF_PUMP_IN_AUTO	VAR	BOOL	000630			3
EFF_PUMP_IN_MANUAL	VAR	BOOL	000629			2
EFF_PUMP_IN_REMOTE	VAR	BOOL	100048			2
EFF_PUMP_MANUAL_HMI	VAR	BOOL	000627			0
EFF_PUMP_ON	VAR	BOOL	100047			1
EFF_PUMP_READY	VAR	BOOL	000693			2
EFF_PUMP_START_HMI	VAR	BOOL	000631			1
EFF_PUMP_START_INTERNAL_MA	VAR	BOOL	000633			2
EFF_PUMP_START_INTERN_AUTO	VAR	BOOL	000644			3
EFF_PUMP_START_LEVEL_SP	VAR	REAL	400903	2.0		1
EFF_PUMP_STOP_HMI	VAR	BOOL	000632			0
EFF_PUMP_STOP_LEVEL_SP	VAR	REAL	400905	1.0		1
EFF_PUMP_TIMER_ACC	VAR	TIME	400218			1
EFF_PUMP_TIMER_DN	VAR	BOOL	000639			2

table continued...

Variable list (Name: All, Type: All, DataType: All, Sorted by: name)

Variable name	Type	DType	Address	Initial value	Comment	Used
EFF_SUMP_HL_ALARM	VAR	BOOL	000641			4
EFF_SUMP_HL_ALARM_SP	VAR	REAL	400901	3.0		1
EFF_SUMP_LEVEL	VAR	REAL	400108			4
EFF_SUMP_LEVEL_PARA	VAR	Para_SCALING	400373			1
in_max	COMP	REAL		32000.0		
out_max	COMP	REAL		3.875		
EFF_SUMP_LEVEL_RAW	VAR	WORD	300006			2
EFF_SUMP_LIT_FAIL	VAR	BOOL	000691			3
EFF_SUMP_LIT_FAIL_DI	VAR	BOOL	100044			1
EFF_TOT_INFO	VAR	Info_TOTALIZ>	400984			2
EFF_TOT_MODE	VAR	Mode_TOTALIZ>	400976			1
EFF_TOT_PARA	VAR	Para_TOTALIZ>	400977			1
thld	COMP	REAL		1.000000E+09		
cutoff	COMP	REAL		0.2		
EFF_TOT_STAT	VAR	WORD	400990			1
EFF_TOT_TRI	VAR	REAL	400982			1
EFF_TOT_TRS	VAR	BOOL	000695			3
EW1_FLOW_TIMER_ACC	VAR	TIME	400224			1
EW1_FLOW_TIMER_DN	VAR	BOOL	000648			3
EW1_FQ	VAR	REAL	400162			3
EW1_FTS	VAR	BOOL	000653			4
EW1_FTS_TACC_SEC	VAR	DINT	400918			1
EW1_FTS_TDN	VAR	BOOL	000654			2
EW1_FTS_TPRE_SEC	VAR	DINT	400916	360		1
EW1_GAL_PER_SECOND	VAR	REAL	400152			2
EW1_LL_FLOAT	VAR	BOOL				0
EW1_ON	VAR	BOOL	100015			5
EW1_PAH_114	VAR	BOOL	000682			4
EW1_PAH_SP	VAR	REAL	401014	15.0		1
EW1_PUMPSPEED_PARA	VAR	Para_SCALING	400300			0
in_max	COMP	REAL		32000.0		
out_max	COMP	REAL		100.0		
EW1_PUMPSPEED_RAW	VAR	WORD	300009			1
EW1_PUMP_DISCHARGE_FLOW	VAR	REAL	400118			3
EW1_PUMP_DISCHARGE_FLOW_PARA	VAR	Para_SCALING	400418			1
in_max	COMP	REAL		32000.0		
out_max	COMP	REAL		30.0		
EW1_PUMP_DISCHARGE_FLOW_RAW	VAR	WORD	300011			1
EW1_PUMP_DISCHARGE_PRESSURE	VAR	REAL	400116			2
EW1_PUMP_DISCHARGE_PRESSURE_PARA	VAR	Para_SCALING	400409			1
in_max	COMP	REAL		32000.0		
out_max	COMP	REAL		75.0		
EW1_PUMP_DISCHARGE_PRESSURE_RAW	VAR	WORD	300010			1
EW1_PUMP_ENABLED	VAR	BOOL	000001			2
EW1_PUMP_FAILED_STATUS	VAR	BOOL	100014			2
EW1_PUMP_IN_AUTO	VAR	BOOL	100016			2
EW1_PUMP_SPEED_COMMAND	VAR	INT	400004			1
EW1_PUMP_SPEED_COMMAND_HMI	VAR	REAL	400910			1
EW1_PUMP_SPEED_COMMAND_PARA	VAR	Para_SCALING	400526			1
in_max	COMP	REAL		100.0		

table continued...

Variable list (Name: All, Type: All, DataType: All, Sorted by: name)

Variable name	Type	DType	Address	Initial value	Comment	Used
out_max	COMP	REAL		32000.0		
EW1_PUMP_SPEED_FB	VAR	REAL	400114			1
EW1_PUMP_SPEED_FB_PARA	VAR	Para_SCALING	400400			1
in_max	COMP	REAL		32000.0		
out_max	COMP	REAL		100.0		
EW1_READY	VAR	BOOL	000672			3
EW1_START_TIMER_DN	VAR	BOOL	000606			0
EW1_WELL_VAULT_HIGHLEVEL_ALARM	VAR	BOOL	100013			2
EW2_FLOW_TIMER_ACC	VAR	TIME	400226			1
EW2_FLOW_TIMER_DN	VAR	BOOL	000649			3
EW2_FQ	VAR	REAL	400164			3
EW2_FTS	VAR	BOOL	000658			4
EW2_FTS_TACC_SEC	VAR	DINT	400934			1
EW2_FTS_TDN	VAR	BOOL	000657			2
EW2_FTS_TPRE_SEC	VAR	DINT	400920			1
EW2_GAL_PER_SECOND	VAR	REAL	400154			2
EW2_ON	VAR	BOOL	100011			5
EW2_PAH_124	VAR	BOOL	000683			4
EW2_PAH_SP	VAR	REAL	401016	15.0		1
EW2_PUMPSPEED_FEEDBACK_PARA	VAR	Para_SCALING	400472			1
in_max	COMP	REAL		32000.0		
out_max	COMP	REAL		100.0		
EW2_PUMPSPEED_FEEDBACK_RAW	VAR	WORD	300017			1
EW2_PUMPSPEED_PARA	VAR	Para_SCALING	400309			0
in_max	COMP	REAL		100.0		
out_min	COMP	REAL		7000.0		
out_max	COMP	REAL		32000.0		
EW2_PUMP_DISCHARGE_FLOW	VAR	REAL	400122			3
EW2_PUMP_DISCHARGE_FLOW_PARA	VAR	Para_SCALING	400436			1
in_max	COMP	REAL		32000.0		
out_max	COMP	REAL		30.0		
EW2_PUMP_DISCHARGE_FLOW_RAW	VAR	WORD	300013			1
EW2_PUMP_DISCHARGE_PRESSURE	VAR	REAL	400120			2
EW2_PUMP_DISCHARGE_PRESSURE_PARA	VAR	Para_SCALING	400427			1
in_max	COMP	REAL		32000.0		
out_max	COMP	REAL		75.0		
EW2_PUMP_DISCHARGE_PRESS_RAW	VAR	WORD	300012			1
EW2_PUMP_ENABLED	VAR	BOOL	000002			2
EW2_PUMP_FAILED_STATUS	VAR	BOOL	100010			2
EW2_PUMP_IN_AUTO	VAR	BOOL	100012			2
EW2_PUMP_SPEED_COMMAND	VAR	INT	400003			1
EW2_PUMP_SPEED_COMMAND_HMI	VAR	REAL	400912			1
EW2_PUMP_SPEED_COMMAND_PARA	VAR	Para_SCALING	400535			1
in_max	COMP	REAL		100.0		
out_max	COMP	REAL		32000.0		
EW2_PUMP_SPEED_FB	VAR	REAL	400130			1
EW2_READY	VAR	BOOL	000673			3
EW2_START_TIMER_DN	VAR	BOOL	000607			0
EW2_WELL_VAULT_HIGHLEVEL_ALARM	VAR	BOOL	100009			2
EW3_FLOW_TIMER_ACC	VAR	TIME	400228			1

table continued...

Variable list (Name: All, Type: All, DataType: All, Sorted by: name)

Variable name	Type	DType	Address	Initial value	Comment	Used
EW3_FLOW_TIMER_DN	VAR	BOOL	000650			3
EW3_FQ	VAR	REAL	400166			3
EW3_FTS	VAR	BOOL	000664			4
EW3_FTS_TACC_SEC	VAR	DINT	400954			1
EW3_FTS_TDN	VAR	BOOL	000663			2
EW3_FTS_TPRE_SEC	VAR	DINT	400956			1
EW3_GAL_PER_SECOND	VAR	REAL	400156			2
EW3_ON	VAR	BOOL	100007			5
EW3_PAH_134	VAR	BOOL	000684			4
EW3_PAH_SP	VAR	REAL	401018	15.0		1
EW3_PUMPSPEED_FB	VAR	REAL	400100			1
EW3_PUMPSPEED_FB_PARA	VAR	Para_SCALING	400319			1
in_max	COMP	REAL		32000.0		
out_max	COMP	REAL		100.0		
EW3_PUMPSPEED_RAW	VAR	WORD	300001			1
EW3_PUMP_DISCHARGE_FLOW	VAR	REAL	400126			3
EW3_PUMP_DISCHARGE_FLOW_PARA	VAR	Para_SCALING	400454			1
in_max	COMP	REAL		32000.0		
out_max	COMP	REAL		30.0		
EW3_PUMP_DISCHARGE_FLOW_RAW	VAR	WORD	300015			1
EW3_PUMP_DISCHARGE_PRESSURE	VAR	REAL	400124			2
EW3_PUMP_DISCHARGE_PRESSURE_PARA	VAR	Para_SCALING	400445			1
in_max	COMP	REAL		32000.0		
out_max	COMP	REAL		75.0		
EW3_PUMP_DISCHARGE_PRESS_RAW	VAR	WORD	300014			1
EW3_PUMP_ENABLED	VAR	BOOL	000003			2
EW3_PUMP_FAILED_STATUS	VAR	BOOL	100006			2
EW3_PUMP_IN_AUTO	VAR	BOOL	100008			2
EW3_PUMP_SPEED_COMMAND	VAR	INT	400002			1
EW3_PUMP_SPEED_COMMAND_HMI	VAR	REAL	400914			1
EW3_PUMP_SPEED_COMMAND_PARA	VAR	Para_SCALING	400544			1
in_max	COMP	REAL		100.0		
out_max	COMP	REAL		32000.0		
EW3_READY	VAR	BOOL	000674			3
EW3_WELL_VAULT_HIGHLEVEL_ALARM	VAR	BOOL	100005			2
EW4_FLOW_TIMER_ACC	VAR	TIME	400230			1
EW4_FLOW_TIMER_DN	VAR	BOOL	000651			3
EW4_FQ	VAR	REAL	400168			3
EW4_FTS	VAR	BOOL	000665			4
EW4_FTS_TACC_SEC	VAR	DINT	400960			1
EW4_FTS_TDN	VAR	BOOL	000666			2
EW4_FTS_TPRE_SEC	VAR	DINT	400958			1
EW4_GAL_PER_SECOND	VAR	REAL	400158			2
EW4_ON	VAR	BOOL	100003			5
EW4_PAH_144	VAR	BOOL	000685			4
EW4_PAH_SP	VAR	REAL	401020			1
EW4_PUMP_DISCHARGE_FLOW	VAR	REAL	400132			3
EW4_PUMP_DISCHARGE_FLOW_PARA	VAR	Para_SCALING	400481			1
in_max	COMP	REAL		32000.0		
out_max	COMP	REAL		30.0		

table continued...

Variable list (Name: All, Type: All, DataType: All, Sorted by: name)

Variable name	Type	DType	Address	Initial value	Comment	Used
EW4_PUMP_DISCHARGE_FLOW_RAW	VAR	WORD	300018			1
EW4_PUMP_DISCHARGE_PRESSURE	VAR	REAL	400128			2
EW4_PUMP_DISCHARGE_PRESSURE_PARA	VAR	Para_SCALING	400463			1
in_max	COMP	REAL		32000.0		
out_max	COMP	REAL		75.0		
EW4_PUMP_DISCHARGE_PRESS_RAW	VAR	WORD	300016			1
EW4_PUMP_ENABLED	VAR	BOOL	000004			2
EW4_PUMP_FAILED_STATUS	VAR	BOOL	100002			2
EW4_PUMP_IN_AUTO	VAR	BOOL	100004			2
EW4_READY	VAR	BOOL	000675			3
EW4_WELL_VAULT_HIGHLEVEL_ALARM	VAR	BOOL	100001			2
EW5_FLOW_TIMER_ACC	VAR	TIME	400232			1
EW5_FLOW_TIMER_DN	VAR	BOOL	000652			3
EW5_FQ	VAR	REAL	400170			3
EW5_FTS	VAR	BOOL	000668			4
EW5_FTS_TACC_SEC	VAR	DINT	400964			1
EW5_FTS_TDN	VAR	BOOL	000667			2
EW5_FTS_TPRE_SEC	VAR	DINT	400962			1
EW5_GAL_PER_SECOND	VAR	REAL	400160			2
EW5_ON	VAR	BOOL	100031			5
EW5_PAH_154	VAR	BOOL	000686			4
EW5_PAH_SP	VAR	REAL	401022			1
EW5_PUMP_DISCHARGE_FLOW	VAR	REAL	400136			3
EW5_PUMP_DISCHARGE_FLOW_PARA	VAR	Para_SCALING	400499			1
in_max	COMP	REAL		32000.0		
out_max	COMP	REAL		30.0		
EW5_PUMP_DISCHARGE_FLOW_RAW	VAR	WORD	300020			1
EW5_PUMP_DISCHARGE_PRESSURE	VAR	REAL	400134			2
EW5_PUMP_DISCHARGE_PRESS_PARA	VAR	Para_SCALING	400490			1
in_max	COMP	REAL		32000.0		
out_max	COMP	REAL		75.0		
EW5_PUMP_DISCHARGE_PRESS_RAW	VAR	WORD	300019			1
EW5_PUMP_ENABLED	VAR	BOOL	000005			2
EW5_PUMP_FAILED_STATUS	VAR	BOOL	100030			2
EW5_PUMP_IN_AUTO	VAR	BOOL	100032			2
EW5_READY	VAR	BOOL	000676			3
EW5_WELL_VAULT_HIGHLEVEL_ALARM	VAR	BOOL	100029			2
EW_NOT_RUNNING	VAR	BOOL	000677			0
EW_OFF_SD_TACC_SEC	VAR	DINT	400968			0
EW_OFF_SD_TPRE_SEC	VAR	DINT	400970	600000		0
EW_READY	VAR	BOOL	000687			2
EXCESSIVE_FLOW_ALARM	VAR	BOOL	000505			5
EXCESSIVE_FLOW_TIMER_ACC	VAR	TIME	400222			1
EXCESSIVE_FLOW_TIMER_DN	VAR	BOOL	000646			2
EXTRACTION_WELLS	IVAR	SECT_CTRL				0
GAL_PER_QTR_SECOND	VAR	REAL	400148			0
GAL_PER_SECOND	VAR	REAL	400146			0
GTP_SHUTDOWN	VAR	BOOL	000671			8
GTP_SHUTDOWN_PB	VAR	BOOL	000679			3
GTP_START_PB	VAR	BOOL	000678			3

table continued...

Variable list (Name: All, Type: All, DataType: All, Sorted by: name)

Variable name	Type	DType	Address	Initial value	Comment	Used
HMI_BF1_DIFF_PRESS_ALARM	VAR	BOOL	000501			3
HMI_BF2_DIFF_PRESS_ALARM	VAR	BOOL	000502			3
INF_FLOW_SUM	VAR	REAL	401008			2
INF_FQ	VAR	REAL	400172			1
INF_FQ_LEQ_TH	VAR	REAL	400993			1
INF_TOT_INFO	VAR	Info_TOTALIZ>	400995			2
INF_TOT_MODE	VAR	Mode_TOTALIZ>	401000			1
INF_TOT_PARA	VAR	Para_TOTALIZ>	401001			1
thld	COMP	REAL		1.000000E+07		
INF_TOT_STAT	VAR	WORD	400999			1
INF_TOT_TRI	VAR	REAL	401006			1
INF_TOT_TRS	VAR	BOOL	000696			3
NEW_DAY_HOLDER	VAR	BOOL	000670			2
NEW_DAY_PULSE	VAR	BOOL	000661			130
NEW_DAY_PULSE_HMI	VAR	BOOL	000669			4
ONE_DAY_TACC	VAR	TIME	400966			1
PLC_DOM	VAR	BYTE	400949			0
PLC_DOW	VAR	BYTE	400947			0
PLC_HOUR	VAR	BYTE	400946			0
PLC_MINUTE	VAR	BYTE	400951			0
PLC_MONTH	VAR	BYTE	400948			0
PLC_SECOND	VAR	BYTE	400952			0
PLC_TOD_CNF	VAR	BOOL	000662			0
PLC_YEAR	VAR	BYTE	400950			0
SHUTDOWN	IVAR	SECT_CTRL				0
SYS_OH	IVAR	SECT_CTRL				0
TEST	VAR	REAL	400938			0
TestBool	VAR	BOOL	000690			0
TEST_PULSE1	VAR	BOOL	000698			0
TOTALIZER_PERMISSIVE	VAR	BOOL	000647			0
TOTALIZER_TIMER_ACC	VAR	TIME	400220			0
TREATMENT_DISCHARGE_FLOW	VAR	REAL	400106			4
TREATMENT_DISCHARGE_FLOW_PARA	VAR	Para_SCALING	400364			1
in_max	COMP	REAL		32000.0		
out_max	COMP	REAL		100.0		
TREATMENT_DISCHARGE_FLOW_RAW	VAR	WORD	300005			2
TREATMENT_DISCHARGE_TIMER_DN	VAR	BOOL	000645			0
TREATMENT_DISCHARGE_TOTAL	VAR	REAL	400150			1
UPS_FAIL	VAR	BOOL	100041			1
VGAC_DIFFERENTIAL_PRESSURE	VAR	REAL	400110			2
VGAC_DIFFERENTIAL_PRESSURE_PARA	VAR	Para_SCALING	400382			1
in_max	COMP	REAL		32000.0		
out_max	COMP	REAL		100.0		
VGAC_DIFFERENTIAL_PRESSURE_RAW	VAR	WORD	300007			1
VGAC_DIFFERENTIAL_TIMER_ACC	VAR	TIME	400214			1
VGAC_DIFFERENTIAL_TIMER_DN	VAR	BOOL	000637			2
VGAC_DISCHARGE_TEMPERATURE	VAR	REAL	400112			2
VGAC_DISCHARGE_TEMPERATURE_PARA	VAR	Para_SCALING	400391			1
in_max	COMP	REAL		32000.0		
out_max	COMP	REAL		200.0		

table continued...

Variable list (Name: All, Type: All, DataType: All, Sorted by: name)

Variable name	Type	DType	Address	Initial value	Comment	Used
VGAC_DISCHARGE_TEMPERATURE_RAW	VAR	WORD	300008			1
VGAC_DISCHARGE_TEMP_TIMER_ACC	VAR	TIME	400216			1
VGAC_DISCHARGE_TEMP_TIMER_DN	VAR	BOOL	000638			2
VGAC_HIGH_DIFF_PRESS_ALARM	VAR	BOOL	000503			4
VGAC_HIGH_DISC_TEMP_ALARM	VAR	BOOL	000504			4
VGAC_PDAH_SP	VAR	REAL	401032			1
VGAC_TAH_SP	VAR	REAL	401034			1

Variable usage (Name: All, Type: All, DataType: All, Sorted by: name)

Variable name	Used in section	Type	Instance/Network	at	Pin	R/W
AC_POWER_FAIL	LD:SHUTDOWN	NC_CONTACT	.8.139	3,12	IN	R
	LD:AD_ALARMS	NC_CONTACT	.6.109	11,48	IN	R
AD_ANTSC_LAL	LD:AD_ALARMS	COIL	FBI_6_55	123,35	Q	W
AD_ASTR_LAHH	LD:AD_ALARMS	COIL	FBI_6_63	123,40	Q	W
AD_BF_PDAH	LD:AD_ALARMS	COIL	FBI_6_41	123,29	Q	W
AD_BF_PDAHH	LD:AD_ALARMS	COIL	FBI_6_50	123,32	Q	W
AD_BWR_FAILURE	LD:AD_ALARMS	COIL	FBI_6_59	123,37	Q	W
AD_CONT_LAHH	LD:AD_ALARMS	COIL	FBI_6_78	123,52	Q	W
AD_DSUMP_LAHH	LD:AD_ALARMS	COIL	FBI_6_81	123,54	Q	W
AD_EFF_FAHH	LD:AD_ALARMS	COIL	FBI_6_82	123,56	Q	W
AD_EFF_PUMP_FAIL	LD:AD_ALARMS	COIL	FBI_6_77	123,50	Q	W
AD_EW_FAILURE	LD:AD_ALARMS	COIL	FBI_6_5	123,6	Q	W
AD_EW_PAH	LD:AD_ALARMS	COIL	FBI_6_29	123,23	Q	W
AD_POWER_FAIL	LD:AD_ALARMS	COIL	FBI_6_74	123,48	Q	W
AD_VGAC_MAH	LD:AD_ALARMS	COIL	FBI_6_70	123,44	Q	W
AD_VGAC_PDAH	LD:AD_ALARMS	COIL	FBI_6_69	123,42	Q	W
AD_VGAC_TAH	LD:AD_ALARMS	COIL	FBI_6_72	123,46	Q	W
AIRSTRIPPER_HH_LEVEL_ALARM	LD:AIR_STRIPPER	NO_CONTACT	.4.132	3,34	IN	R
AIRSTRIPPER_HH_LEVEL_ALARM_HMI	LD:SHUTDOWN	NO_CONTACT	.8.35	3,6	IN	R
	LD:AIR_STRIPPER	NO_CONTACT	.4.150	3,35	IN	R
	LD:AIR_STRIPPER	COIL	FBI_4_154	83,34	Q	W
	LD:AD_ALARMS	NO_CONTACT	.6.64	11,40	IN	R
AIRSTRIPPER_HIGH_RH_ALARM	LD:SHUTDOWN	NO_CONTACT	.8.120	3,11	IN	R
	LD:AIR_STRIPPER	NO_CONTACT	.4.145	3,32	IN	R
	LD:AIR_STRIPPER	COIL	FBI_4_149	83,31	Q	W
	LD:AD_ALARMS	NO_CONTACT	.6.71	11,44	IN	R
AIRSTRIPPER_HIGH_TEMP_ALARM	LD:SHUTDOWN	NO_CONTACT	.8.138	3,14	IN	R
	LD:AIR_STRIPPER	COIL	FBI_4_141	83,28	Q	W
	LD:AIR_STRIPPER	NO_CONTACT	.4.142	3,29	IN	R
	LD:AD_ALARMS	NO_CONTACT	.6.62	11,38	IN	R
AIRSTRIPPER_RH	LD:AIR_STRIPPER	COMP_DB	FBI_4_20	58,14	IN1	R
	LD:ANALOG	SCALING	FBI_1_55	61,22	OUT	W
AIRSTRIPPER_RH_TIMER_ACC	LD:AIR_STRIPPER	TON	FBI_4_33	74,27	ET	W
AIRSTRIPPER_RH_TIMER_DN	LD:AIR_STRIPPER	TON	FBI_4_33	74,26	Q	W
	LD:AIR_STRIPPER	NO_CONTACT	.4.94	3,31	IN	R
AIRSTRIPPER_TEMP	LD:AIR_STRIPPER	COMP_DB	FBI_4_19	10,14	IN1	R
	LD:ANALOG	SCALING	FBI_1_58	61,16	OUT	W
AIRSTRIPPER_TEMP_TIMER_ACC	LD:AIR_STRIPPER	TON	FBI_4_31	74,22	ET	W
AIRSTRIPPER_TEMP_TIMER_DN	LD:AIR_STRIPPER	TON	FBI_4_31	74,21	Q	W
	LD:AIR_STRIPPER	NO_CONTACT	.4.93	3,28	IN	R
AIRSTR_DIS_RELATIVE_FLOW_PARA	LD:ANALOG	SCALING	FBI_1_100	42,144	PARA	R
AIRSTR_DIS_RELATIVE_FLOW_RAW	LD:ANALOG	W_INT_REAL	FBI_1_99	18,143	IN	R
ALARM_RESET_PB	LD:SYS_OH	NO_CONTACT	.7.24	3,26	IN	R
	LD:SYS_OH	RESET_COIL	FBI_7_27	99,25	Q	W
	LD:SHUTDOWN	NC_CONTACT	.8.14	19,51	IN	R
	LD:SHUTDOWN	NC_CONTACT	.8.31	19,63	IN	R
	LD:SHUTDOWN	NC_CONTACT	.8.100	27,90	IN	R
	LD:SHUTDOWN	NC_CONTACT	.8.101	27,86	IN	R
	LD:SHUTDOWN	NC_CONTACT	.8.163	19,110	IN	R
	LD:SHUTDOWN	NC_CONTACT	.8.167	19,119	IN	R
	LD:DISCHARGE_WETWELL_AND_>	NC_CONTACT	.5.334	27,25	IN	R

table continued...

Variable usage (Name: All, Type: All, DataType: All, Sorted by: name)

Variable name	Used in section	Type	Instance/Network	at	Pin	R/W
	PUMP					
	LD:AIR_STRIPPER	NC_CONTACT	.4.143	27,29	IN	R
	LD:AIR_STRIPPER	NC_CONTACT	.4.146	27,32	IN	R
	LD:AIR_STRIPPER	NC_CONTACT	.4.151	27,35	IN	R
	LD:AIR_STRIPPER	NC_CONTACT	.4.156	27,71	IN	R
	LD:BAGFILTER_SCALENT_VGAC	NC_CONTACT	.3.121	35,58	IN	R
	LD:BAGFILTER_SCALENT_VGAC	NC_CONTACT	.3.101	35,54	IN	R
	LD:BAGFILTER_SCALENT_VGAC	NC_CONTACT	.3.110	35,19	IN	R
	LD:BAGFILTER_SCALENT_VGAC	NC_CONTACT	.3.111	35,23	IN	R
	LD:EXTRACTION_WELLS	NC_CONTACT	.2.368	11,12	IN	R
	LD:EXTRACTION_WELLS	NC_CONTACT	.2.446	11,39	IN	R
	LD:EXTRACTION_WELLS	NC_CONTACT	.2.473	11,67	IN	R
	LD:EXTRACTION_WELLS	NC_CONTACT	.2.488	11,95	IN	R
	LD:EXTRACTION_WELLS	NC_CONTACT	.2.515	11,121	IN	R
	LD:EXTRACTION_WELLS	NC_CONTACT	.2.585	19,24	IN	R
	LD:EXTRACTION_WELLS	NC_CONTACT	.2.588	19,52	IN	R
	LD:EXTRACTION_WELLS	NC_CONTACT	.2.591	19,80	IN	R
	LD:EXTRACTION_WELLS	NC_CONTACT	.2.594	19,107	IN	R
	LD:EXTRACTION_WELLS	NC_CONTACT	.2.597	19,133	IN	R
ANTISCALANT_MAN_START	LD:BAGFILTER_SCALENT_VGAC	NO_CONTACT	.3.123	35,32	IN	R
ANTI_SCALENT_PUMP_DISCHARGE_FLOW	LD:ANALOG	SCALING	FBI_1_97	61,138	OUT	W
ANTI_SCALENT_PUMP_START	LD:BAGFILTER_SCALENT_VGAC	COIL	FBI_3_57	91,26	Q	W
ANTI_SCALENT_PUMP_START_HMI	LD:BAGFILTER_SCALENT_VGAC	NC_CONTACT	.3.77	11,26	IN	R
	LD:BAGFILTER_SCALENT_VGAC	NO_CONTACT	.3.79	11,32	IN	R
ANTI_SCALENT_TANK_LL_ALARM	LD:BAGFILTER_SCALENT_VGAC	NC_CONTACT	.3.73	59,26	IN	R
	LD:AD_ALARMS	NO_CONTACT	.6.57	11,35	IN	R
AS_DISCHARGE_BLOWER_RH_RAW	LD:ANALOG	W_INT_REAL	FBI_1_56	18,22	IN	R
AS_DISCHARGE_BLOWER_TEMP_PARA	LD:ANALOG	SCALING	FBI_1_58	42,17	PARA	R
AS_DISCHARGE_BLOWER_TEMP_RAW	LD:ANALOG	W_INT_REAL	FBI_1_57	18,16	IN	R
AS_HIGH_RH_ALARM_SP	LD:AIR_STRIPPER	COMP_DB	FBI_4_20	58,15	IN2	R
AS_HIGH_TEMP_ALARM_SP	LD:AIR_STRIPPER	COMP_DB	FBI_4_19	10,15	IN2	R
AS_PUMP_DISCHARGE_FLOW_PARA	LD:ANALOG	SCALING	FBI_1_97	42,139	PARA	R
AS_PUMP_DISCHARGE_FLOW_RAW	LD:ANALOG	W_INT_REAL	FBI_1_98	18,138	IN	R
AS_TANK_CONTAINMENT_HH	LD:BAGFILTER_SCALENT_VGAC	NC_CONTACT	.3.74	59,27	IN	R
BAGFILTER1_DIFF_PRESS	LD:SHUTDOWN	COMP_DB	FBI_8_110	10,70	IN1	R
	LD:BAGFILTER_SCALENT_VGAC	COMP_DB	FBI_3_2	10,4	IN1	R
	LD:ANALOG	SCALING	FBI_1_94	61,126	OUT	W
BAGFILTER1_DIFF_PRESS_RAW	LD:ANALOG	W_INT_REAL	FBI_1_93	18,126	IN	R
BAGFILTER1_PARA	LD:ANALOG	SCALING	FBI_1_94	42,127	PARA	R
BAGFILTER2_DIFF_PRESS	LD:SHUTDOWN	COMP_DB	FBI_8_111	58,70	IN1	R
	LD:BAGFILTER_SCALENT_VGAC	COMP_DB	FBI_3_3	58,4	IN1	R
	LD:ANALOG	SCALING	FBI_1_96	61,132	OUT	W
BAGFILTER2_DIFF_PRESS_RAW	LD:ANALOG	W_INT_REAL	FBI_1_95	18,132	IN	R
BAGFILTER2_PARA	LD:ANALOG	SCALING	FBI_1_96	42,133	PARA	R
BF1_PDAHH_206	LD:SHUTDOWN	NO_CONTACT	.8.94	3,9	IN	R
	LD:SHUTDOWN	COIL	FBI_8_97	91,85	Q	W
	LD:SHUTDOWN	NO_CONTACT	.8.103	11,86	IN	R
	LD:AD_ALARMS	NO_CONTACT	.6.48	11,32	IN	R
BF1_PDAHH_SP	LD:SHUTDOWN	COMP_DB	FBI_8_110	10,71	IN2	R
BF1_PDAHH_TACC	LD:SHUTDOWN	TON	FBI_8_106	74,78	ET	R

table continued...

Variable usage (Name: All, Type: All, DataType: All, Sorted by: name)

Variable name	Used in section	Type	Instance/Network	at	Pin	R/W
BF1_PDAHH_TDN	LD:SHUTDOWN	NO_CONTACT	.8.105	11,85	IN	R
	LD:SHUTDOWN	TON	FBI_8_106	82,77	Q	W
BF1_PDAH_SP	LD:BAGFILTER_SCALENT_VGAC	COMP_DB	FBI_3_2	10,5	IN2	R
BF1_TIMER_ACC	LD:BAGFILTER_SCALENT_VGAC	TON	FBI_3_17	74,12	ET	W
BF1_TIMER_DN	LD:BAGFILTER_SCALENT_VGAC	TON	FBI_3_17	82,11	Q	W
	LD:BAGFILTER_SCALENT_VGAC	NO_CONTACT	.3.22	11,18	IN	R
BF2_PDAHH_208	LD:SHUTDOWN	NO_CONTACT	.8.95	3,10	IN	R
	LD:SHUTDOWN	COIL	FBI_8_96	91,89	Q	W
	LD:SHUTDOWN	NO_CONTACT	.8.102	11,90	IN	R
	LD:AD_ALARMS	NO_CONTACT	.6.49	11,33	IN	R
BF2_PDAHH_SP	LD:SHUTDOWN	COMP_DB	FBI_8_111	58,71	IN2	R
BF2_PDAHH_TACC	LD:SHUTDOWN	TON	FBI_8_107	74,83	ET	W
BF2_PDAHH_TDN	LD:SHUTDOWN	NO_CONTACT	.8.104	11,89	IN	R
	LD:SHUTDOWN	TON	FBI_8_107	82,82	Q	W
BF2_PDAH_SP	LD:BAGFILTER_SCALENT_VGAC	COMP_DB	FBI_3_3	58,5	IN2	R
BF2_TIMER_ACC	LD:BAGFILTER_SCALENT_VGAC	TON	FBI_3_19	74,17	ET	W
BF2_TIMER_DN	LD:BAGFILTER_SCALENT_VGAC	TON	FBI_3_19	82,16	Q	W
	LD:BAGFILTER_SCALENT_VGAC	NO_CONTACT	.3.23	11,22	IN	R
BLOWER_CTR	LD:AIR_STRIPPER	COIL	FBI_4_111	83,52	Q	W
	LD:AIR_STRIPPER	NO_CONTACT	.4.191	3,62	IN	R
BLOWER_DISCHARGE_FLOW	LD:ANALOG	SCALING	FBI_1_100	61,143	OUT	W
BLOWER_FAILED	LD:AIR_STRIPPER	NC_CONTACT	.4.122	11,56	IN	R
BLOWER_FAILURE	LD:AIR_STRIPPER	NO_CONTACT	.4.155	3,71	IN	R
	LD:AIR_STRIPPER	COIL	FBI_4_159	83,69	Q	W
	LD:AIR_STRIPPER	NC_CONTACT	.4.176	19,46	IN	R
	LD:AD_ALARMS	NO_CONTACT	.6.58	11,37	IN	R
BLOWER_FTS_TACC_SEC	LD:AIR_STRIPPER	DIV_DINT	.4.184	99,63	OUT	W
BLOWER_FTS_TDN	LD:AIR_STRIPPER	TON	FBI_4_190	58,63	Q	W
	LD:AIR_STRIPPER	NO_CONTACT	.4.192	3,70	IN	R
BLOWER_FTS_TPRE_SEC	LD:AIR_STRIPPER	MUL_DINT	.4.188	10,66	IN1	R
BLOWER_IN_AUTO	LD:AIR_STRIPPER	COIL	FBI_4_86	75,2	Q	W
	LD:AIR_STRIPPER	NO_CONTACT	.4.175	3,46	IN	R
BLOWER_IN_MANUAL	LD:AIR_STRIPPER	COIL	FBI_4_83	75,0	Q	W
	LD:AIR_STRIPPER	NO_CONTACT	.4.87	3,5	IN	R
BLOWER_MANUAL_HMI	LD:AIR_STRIPPER	NO_CONTACT	.4.85	27,2	IN	R
	LD:AIR_STRIPPER	NC_CONTACT	.4.119	27,0	IN	R
BLOWER_MANUAL_START_PB	LD:AIR_STRIPPER	NO_CONTACT	.4.89	27,5	IN	R
BLOWER_ON	LD:AIR_STRIPPER	NC_CONTACT	.4.189	27,62	IN	R
BLOWER_PAL	LD:AIR_STRIPPER	NO_CONTACT	.4.180	11,57	IN	R
BLOWER_READY	LD:SHUTDOWN	NC_CONTACT	.8.119	3,8	IN	R
	LD:AIR_STRIPPER	NO_CONTACT	.4.170	3,50	IN	R
	LD:AIR_STRIPPER	COIL	FBI_4_178	83,46	Q	W
BLOWER_REMOTE	LD:AIR_STRIPPER	NO_CONTACT	.4.82	3,0	IN	R
	LD:AIR_STRIPPER	NO_CONTACT	.4.84	3,2	IN	R
BLOWER_RH_PARA	LD:ANALOG	SCALING	FBI_1_55	42,23	PARA	R
BLOWER_SD_TACC_SEC	LD:AIR_STRIPPER	TIME_TO_DINT	.4.168	85,39	OUT	W
BLOWER_SD_TPRE_SEC	LD:AIR_STRIPPER	DINT_TO_TIME	.4.165	26,43	IN	R
BLOWER_SHUTDOWN	LD:AIR_STRIPPER	NC_CONTACT	.4.131	19,50	IN	R
	LD:AIR_STRIPPER	COIL	FBI_4_167	59,38	Q	W
BLOWER_START_AUTO	LD:AIR_STRIPPER	COIL	FBI_4_103	83,50	Q	W

table continued...

Variable usage (Name: All, Type: All, DataType: All, Sorted by: name)

Variable name	Used in section	Type	Instance/Network	at	Pin	R/W
	LD:AIR_STRIPPER	NO_CONTACT	.4.110	3,53	IN	R
BLOWER_START_MANUAL	LD:AIR_STRIPPER	COIL	FBI_4_88	75,5	Q	W
	LD:AIR_STRIPPER	NO_CONTACT	.4.109	3,52	IN	R
BLOWER_START_TIMER_ACC	LD:AIR_STRIPPER	TON	FBI_4_55	82,58	ET	W
BLOWER_START_TIMER_DN	LD:AIR_STRIPPER	TON	FBI_4_55	82,57	Q	W
	LD:AIR_STRIPPER	NO_CONTACT	.4.113	3,69	IN	R
CONTAINMENT_LAH	LD:SHUTDOWN	COIL	FBI_8_165	91,118	Q	W
	LD:SHUTDOWN	NO_CONTACT	.8.166	3,119	IN	R
CONTAINMENT_LAH_DI	LD:SHUTDOWN	NO_CONTACT	.8.24	3,3	IN	R
	LD:SHUTDOWN	NO_CONTACT	.8.164	3,116	IN	R
	LD:DISCHARGE_WETWELL_AND_> PUMP	NC_CONTACT	.5.294	3,40	IN	R
	LD:AD_ALARMS	NO_CONTACT	.6.79	11,52	IN	R
DRAIN_PUMP_ENABLE	LD:DISCHARGE_WETWELL_AND_> PUMP	COIL	FBI_5_295	91,40	Q	W
DRAIN_SUMP_LAHH_235	LD:AD_ALARMS	NC_CONTACT	.6.94	11,54	IN	R
EFF_DAILY_FQ[124]	FBD:DAILY_FLOW_TOTAL_STOR> AGE_01	MOVE	.15.1	39,7	IN	R
EFF_DAILY_FQ[125]	FBD:DAILY_FLOW_TOTAL_STOR> AGE_01	MOVE	.15.1	55,7	OUT	W
EFF_DAILY_FQ[123]	FBD:DAILY_FLOW_TOTAL_STOR> AGE_01	MOVE	.15.4	39,22	IN	R
EFF_DAILY_FQ[124]	FBD:DAILY_FLOW_TOTAL_STOR> AGE_01	MOVE	.15.4	55,22	OUT	
EFF_DAILY_FQ[122]	FBD:DAILY_FLOW_TOTAL_STOR> AGE_01	MOVE	.15.7	39,37	IN	R
EFF_DAILY_FQ[123]	FBD:DAILY_FLOW_TOTAL_STOR> AGE_01	MOVE	.15.7	55,37	OUT	W
EFF_DAILY_FQ[121]	FBD:DAILY_FLOW_TOTAL_STOR> AGE_01	MOVE	.15.10	39,52	IN	R
EFF_DAILY_FQ[122]	FBD:DAILY_FLOW_TOTAL_STOR> AGE_01	MOVE	.15.10	55,52	OUT	W
EFF_DAILY_FQ[120]	FBD:DAILY_FLOW_TOTAL_STOR> AGE_01	MOVE	.15.13	39,67	IN	R
EFF_DAILY_FQ[121]	FBD:DAILY_FLOW_TOTAL_STOR> AGE_01	MOVE	.15.13	55,67	OUT	W
EFF_DAILY_FQ[119]	FBD:DAILY_FLOW_TOTAL_STOR> AGE_01	MOVE	.15.16	39,82	IN	R
EFF_DAILY_FQ[120]	FBD:DAILY_FLOW_TOTAL_STOR> AGE_01	MOVE	.15.16	55,82	OUT	W
EFF_DAILY_FQ[118]	FBD:DAILY_FLOW_TOTAL_STOR> AGE_01	MOVE	.15.19	114,7	IN	R
EFF_DAILY_FQ[119]	FBD:DAILY_FLOW_TOTAL_STOR> AGE_01	MOVE	.15.19	130,7	OUT	W
EFF_DAILY_FQ[117]	FBD:DAILY_FLOW_TOTAL_STOR> AGE_01	MOVE	.15.22	114,22	IN	R
EFF_DAILY_FQ[118]	FBD:DAILY_FLOW_TOTAL_STOR> AGE_01	MOVE	.15.22	130,22	OUT	W
EFF_DAILY_FQ[116]	FBD:DAILY_FLOW_TOTAL_STOR> AGE_01	MOVE	.15.25	114,37	IN	

table continued...

Variable usage (Name: All, Type: All, DataType: All, Sorted by: name)

Variable name	Used in section	Type	Instance/Network	at	Pin	R/W
EFF_DAILY_FQ[117]	FBD:DAILY_FLOW_TOTAL_STOR>AGE_01	MOVE	.15.25	130,37	OUT	W
EFF_DAILY_FQ[115]	FBD:DAILY_FLOW_TOTAL_STOR>AGE_01	MOVE	.15.28	114,52	IN	R
EFF_DAILY_FQ[116]	FBD:DAILY_FLOW_TOTAL_STOR>AGE_01	MOVE	.15.28	130,52	OUT	W
EFF_DAILY_FQ[114]	FBD:DAILY_FLOW_TOTAL_STOR>AGE_01	MOVE	.15.31	114,67	IN	R
EFF_DAILY_FQ[115]	FBD:DAILY_FLOW_TOTAL_STOR>AGE_01	MOVE	.15.31	130,67	OUT	W
EFF_DAILY_FQ[113]	FBD:DAILY_FLOW_TOTAL_STOR>AGE_01	MOVE	.15.34	114,82	IN	R
EFF_DAILY_FQ[114]	FBD:DAILY_FLOW_TOTAL_STOR>AGE_01	MOVE	.15.34	130,82	OUT	W
EFF_DAILY_FQ[112]	FBD:DAILY_FLOW_TOTAL_STOR>AGE_01	MOVE	.15.37	189,7	IN	R
EFF_DAILY_FQ[113]	FBD:DAILY_FLOW_TOTAL_STOR>AGE_01	MOVE	.15.37	205,7	OUT	W
EFF_DAILY_FQ[111]	FBD:DAILY_FLOW_TOTAL_STOR>AGE_01	MOVE	.15.40	189,22	IN	R
EFF_DAILY_FQ[112]	FBD:DAILY_FLOW_TOTAL_STOR>AGE_01	MOVE	.15.40	205,22	OUT	W
EFF_DAILY_FQ[110]	FBD:DAILY_FLOW_TOTAL_STOR>AGE_01	MOVE	.15.43	189,37	IN	R
EFF_DAILY_FQ[111]	FBD:DAILY_FLOW_TOTAL_STOR>AGE_01	MOVE	.15.43	205,37	OUT	W
EFF_DAILY_FQ[109]	FBD:DAILY_FLOW_TOTAL_STOR>AGE_01	MOVE	.15.46	189,52	IN	R
EFF_DAILY_FQ[110]	FBD:DAILY_FLOW_TOTAL_STOR>AGE_01	MOVE	.15.46	205,52	OUT	W
EFF_DAILY_FQ[108]	FBD:DAILY_FLOW_TOTAL_STOR>AGE_01	MOVE	.15.49	189,67	IN	R
EFF_DAILY_FQ[109]	FBD:DAILY_FLOW_TOTAL_STOR>AGE_01	MOVE	.15.49	205,67	OUT	W
EFF_DAILY_FQ[107]	FBD:DAILY_FLOW_TOTAL_STOR>AGE_01	MOVE	.15.52	189,82	IN	R
EFF_DAILY_FQ[108]	FBD:DAILY_FLOW_TOTAL_STOR>AGE_01	MOVE	.15.52	205,82	OUT	W
EFF_DAILY_FQ[106]	FBD:DAILY_FLOW_TOTAL_STOR>AGE_01	MOVE	.15.55	264,7	IN	R
EFF_DAILY_FQ[107]	FBD:DAILY_FLOW_TOTAL_STOR>AGE_01	MOVE	.15.55	280,7	OUT	W
EFF_DAILY_FQ[105]	FBD:DAILY_FLOW_TOTAL_STOR>AGE_01	MOVE	.15.58	264,22	IN	R
EFF_DAILY_FQ[106]	FBD:DAILY_FLOW_TOTAL_STOR>AGE_01	MOVE	.15.58	280,22	OUT	W
EFF_DAILY_FQ[104]	FBD:DAILY_FLOW_TOTAL_STOR>AGE_01	MOVE	.15.61	264,37	IN	R
EFF_DAILY_FQ[105]	FBD:DAILY_FLOW_TOTAL_STOR>AGE_01	MOVE	.15.61	280,37	OUT	W

table continued...

Variable usage (Name: All, Type: All, DataType: All, Sorted by: name)

Variable name	Used in section	Type	Instance/Network	at	Pin	R/W
EFF_DAILY_FQ[103]	FBD:DAILY_FLOW_TOTAL_STOR>AGE_01	MOVE	.15.64	264,52	IN	R
EFF_DAILY_FQ[104]	FBD:DAILY_FLOW_TOTAL_STOR>AGE_01	MOVE	.15.64	280,52	OUT	W
EFF_DAILY_FQ[102]	FBD:DAILY_FLOW_TOTAL_STOR>AGE_01	MOVE	.15.67	264,67	IN	R
EFF_DAILY_FQ[103]	FBD:DAILY_FLOW_TOTAL_STOR>AGE_01	MOVE	.15.67	280,67	OUT	W
EFF_DAILY_FQ[101]	FBD:DAILY_FLOW_TOTAL_STOR>AGE_01	MOVE	.15.70	264,82	IN	R
EFF_DAILY_FQ[102]	FBD:DAILY_FLOW_TOTAL_STOR>AGE_01	MOVE	.15.70	280,82	OUT	W
EFF_DAILY_FQ[100]	FBD:DAILY_FLOW_TOTAL_STOR>AGE_01	MOVE	.15.73	39,107	IN	R
EFF_DAILY_FQ[101]	FBD:DAILY_FLOW_TOTAL_STOR>AGE_01	MOVE	.15.73	55,107	OUT	W
EFF_DAILY_FQ[99]	FBD:DAILY_FLOW_TOTAL_STOR>AGE_01	MOVE	.15.76	39,122	IN	R
EFF_DAILY_FQ[100]	FBD:DAILY_FLOW_TOTAL_STOR>AGE_01	MOVE	.15.76	55,122	OUT	W
EFF_DAILY_FQ[98]	FBD:DAILY_FLOW_TOTAL_STOR>AGE_01	MOVE	.15.79	39,137	IN	R
EFF_DAILY_FQ[99]	FBD:DAILY_FLOW_TOTAL_STOR>AGE_01	MOVE	.15.79	55,137	OUT	
EFF_DAILY_FQ[97]	FBD:DAILY_FLOW_TOTAL_STOR>AGE_01	MOVE	.15.82	39,152	IN	R
EFF_DAILY_FQ[98]	FBD:DAILY_FLOW_TOTAL_STOR>AGE_01	MOVE	.15.82	55,152	OUT	W
EFF_DAILY_FQ[96]	FBD:DAILY_FLOW_TOTAL_STOR>AGE_01	MOVE	.15.85	39,167	IN	R
EFF_DAILY_FQ[97]	FBD:DAILY_FLOW_TOTAL_STOR>AGE_01	MOVE	.15.85	55,167	OUT	W
EFF_DAILY_FQ[95]	FBD:DAILY_FLOW_TOTAL_STOR>AGE_01	MOVE	.15.88	39,182	IN	R
EFF_DAILY_FQ[96]	FBD:DAILY_FLOW_TOTAL_STOR>AGE_01	MOVE	.15.88	55,182	OUT	W
EFF_DAILY_FQ[94]	FBD:DAILY_FLOW_TOTAL_STOR>AGE_01	MOVE	.15.91	114,107	IN	R
EFF_DAILY_FQ[95]	FBD:DAILY_FLOW_TOTAL_STOR>AGE_01	MOVE	.15.91	130,107	OUT	W
EFF_DAILY_FQ[93]	FBD:DAILY_FLOW_TOTAL_STOR>AGE_01	MOVE	.15.94	114,122	IN	R
EFF_DAILY_FQ[94]	FBD:DAILY_FLOW_TOTAL_STOR>AGE_01	MOVE	.15.94	130,122	OUT	W
EFF_DAILY_FQ[92]	FBD:DAILY_FLOW_TOTAL_STOR>AGE_01	MOVE	.15.97	114,137	IN	R
EFF_DAILY_FQ[93]	FBD:DAILY_FLOW_TOTAL_STOR>AGE_01	MOVE	.15.97	130,137	OUT	W
EFF_DAILY_FQ[91]	FBD:DAILY_FLOW_TOTAL_STOR>AGE_01	MOVE	.15.100	114,152	IN	

table continued...

Variable usage (Name: All, Type: All, DataType: All, Sorted by: name)

Variable name	Used in section	Type	Instance/Network	at	Pin	R/W
EFF_DAILY_FQ[92]	FBD:DAILY_FLOW_TOTAL_STOR>AGE_01	MOVE	.15.100	130,152	OUT	W
EFF_DAILY_FQ[90]	FBD:DAILY_FLOW_TOTAL_STOR>AGE_01	MOVE	.15.103	114,167	IN	R
EFF_DAILY_FQ[91]	FBD:DAILY_FLOW_TOTAL_STOR>AGE_01	MOVE	.15.103	130,167	OUT	W
EFF_DAILY_FQ[89]	FBD:DAILY_FLOW_TOTAL_STOR>AGE_01	MOVE	.15.106	114,182	IN	R
EFF_DAILY_FQ[90]	FBD:DAILY_FLOW_TOTAL_STOR>AGE_01	MOVE	.15.106	130,182	OUT	W
EFF_DAILY_FQ[88]	FBD:DAILY_FLOW_TOTAL_STOR>AGE_01	MOVE	.15.109	189,107	IN	R
EFF_DAILY_FQ[89]	FBD:DAILY_FLOW_TOTAL_STOR>AGE_01	MOVE	.15.109	205,107	OUT	W
EFF_DAILY_FQ[87]	FBD:DAILY_FLOW_TOTAL_STOR>AGE_01	MOVE	.15.112	189,122	IN	R
EFF_DAILY_FQ[88]	FBD:DAILY_FLOW_TOTAL_STOR>AGE_01	MOVE	.15.112	205,122	OUT	W
EFF_DAILY_FQ[86]	FBD:DAILY_FLOW_TOTAL_STOR>AGE_01	MOVE	.15.115	189,137	IN	R
EFF_DAILY_FQ[87]	FBD:DAILY_FLOW_TOTAL_STOR>AGE_01	MOVE	.15.115	205,137	OUT	W
EFF_DAILY_FQ[85]	FBD:DAILY_FLOW_TOTAL_STOR>AGE_01	MOVE	.15.118	189,152	IN	R
EFF_DAILY_FQ[86]	FBD:DAILY_FLOW_TOTAL_STOR>AGE_01	MOVE	.15.118	205,152	OUT	W
EFF_DAILY_FQ[84]	FBD:DAILY_FLOW_TOTAL_STOR>AGE_01	MOVE	.15.121	189,167	IN	R
EFF_DAILY_FQ[85]	FBD:DAILY_FLOW_TOTAL_STOR>AGE_01	MOVE	.15.121	205,167	OUT	W
EFF_DAILY_FQ[83]	FBD:DAILY_FLOW_TOTAL_STOR>AGE_01	MOVE	.15.124	189,182	IN	R
EFF_DAILY_FQ[84]	FBD:DAILY_FLOW_TOTAL_STOR>AGE_01	MOVE	.15.124	205,182	OUT	W
EFF_DAILY_FQ[82]	FBD:DAILY_FLOW_TOTAL_STOR>AGE_01	MOVE	.15.127	264,107	IN	R
EFF_DAILY_FQ[83]	FBD:DAILY_FLOW_TOTAL_STOR>AGE_01	MOVE	.15.127	280,107	OUT	W
EFF_DAILY_FQ[81]	FBD:DAILY_FLOW_TOTAL_STOR>AGE_01	MOVE	.15.130	264,122	IN	R
EFF_DAILY_FQ[82]	FBD:DAILY_FLOW_TOTAL_STOR>AGE_01	MOVE	.15.130	280,122	OUT	W
EFF_DAILY_FQ[80]	FBD:DAILY_FLOW_TOTAL_STOR>AGE_01	MOVE	.15.133	264,137	IN	R
EFF_DAILY_FQ[81]	FBD:DAILY_FLOW_TOTAL_STOR>AGE_01	MOVE	.15.133	280,137	OUT	W
EFF_DAILY_FQ[79]	FBD:DAILY_FLOW_TOTAL_STOR>AGE_01	MOVE	.15.136	264,152	IN	R
EFF_DAILY_FQ[80]	FBD:DAILY_FLOW_TOTAL_STOR>AGE_01	MOVE	.15.136	280,152	OUT	W

table continued...

Variable usage (Name: All, Type: All, DataType: All, Sorted by: name)

Variable name	Used in section	Type	Instance/Network	at	Pin	R/W
EFF_DAILY_FQ[78]	FBD:DAILY_FLOW_TOTAL_STOR>AGE_01	MOVE	.15.139	264,167	IN	R
EFF_DAILY_FQ[79]	FBD:DAILY_FLOW_TOTAL_STOR>AGE_01	MOVE	.15.139	280,167	OUT	W
EFF_DAILY_FQ[77]	FBD:DAILY_FLOW_TOTAL_STOR>AGE_01	MOVE	.15.142	264,182	IN	R
EFF_DAILY_FQ[78]	FBD:DAILY_FLOW_TOTAL_STOR>AGE_01	MOVE	.15.142	280,182	OUT	W
EFF_DAILY_FQ[76]	FBD:DAILY_FLOW_TOTAL_STOR>AGE_01	MOVE	.15.145	39,207	IN	R
EFF_DAILY_FQ[77]	FBD:DAILY_FLOW_TOTAL_STOR>AGE_01	MOVE	.15.145	55,207	OUT	W
EFF_DAILY_FQ[75]	FBD:DAILY_FLOW_TOTAL_STOR>AGE_01	MOVE	.15.148	39,222	IN	R
EFF_DAILY_FQ[76]	FBD:DAILY_FLOW_TOTAL_STOR>AGE_01	MOVE	.15.148	55,222	OUT	W
EFF_DAILY_FQ[74]	FBD:DAILY_FLOW_TOTAL_STOR>AGE_01	MOVE	.15.151	114,207	IN	R
EFF_DAILY_FQ[75]	FBD:DAILY_FLOW_TOTAL_STOR>AGE_01	MOVE	.15.151	130,207	OUT	W
EFF_DAILY_FQ[73]	FBD:DAILY_FLOW_TOTAL_STOR>AGE_01	MOVE	.15.154	114,222	IN	R
EFF_DAILY_FQ[74]	FBD:DAILY_FLOW_TOTAL_STOR>AGE_01	MOVE	.15.154	130,222	OUT	
EFF_DAILY_FQ[72]	FBD:DAILY_FLOW_TOTAL_STOR>AGE_01	MOVE	.15.157	189,207	IN	R
EFF_DAILY_FQ[73]	FBD:DAILY_FLOW_TOTAL_STOR>AGE_01	MOVE	.15.157	205,207	OUT	W
EFF_DAILY_FQ[71]	FBD:DAILY_FLOW_TOTAL_STOR>AGE_01	MOVE	.15.160	189,222	IN	R
EFF_DAILY_FQ[72]	FBD:DAILY_FLOW_TOTAL_STOR>AGE_01	MOVE	.15.160	205,222	OUT	W
EFF_DAILY_FQ[70]	FBD:DAILY_FLOW_TOTAL_STOR>AGE_01	MOVE	.15.163	264,207	IN	R
EFF_DAILY_FQ[71]	FBD:DAILY_FLOW_TOTAL_STOR>AGE_01	MOVE	.15.163	280,207	OUT	W
EFF_DAILY_FQ[69]	FBD:DAILY_FLOW_TOTAL_STOR>AGE_01	MOVE	.15.166	264,222	IN	R
EFF_DAILY_FQ[70]	FBD:DAILY_FLOW_TOTAL_STOR>AGE_01	MOVE	.15.166	280,222	OUT	W
EFF_DAILY_FQ[68]	FBD:DAILY_FLOW_TOTAL_STOR>AGE_02	MOVE	.16.1	39,7	IN	R
EFF_DAILY_FQ[69]	FBD:DAILY_FLOW_TOTAL_STOR>AGE_02	MOVE	.16.1	55,7	OUT	W
EFF_DAILY_FQ[67]	FBD:DAILY_FLOW_TOTAL_STOR>AGE_02	MOVE	.16.4	39,22	IN	R
EFF_DAILY_FQ[68]	FBD:DAILY_FLOW_TOTAL_STOR>AGE_02	MOVE	.16.4	55,22	OUT	W
EFF_DAILY_FQ[66]	FBD:DAILY_FLOW_TOTAL_STOR>AGE_02	MOVE	.16.7	39,37	IN	

table continued...

Variable usage (Name: All, Type: All, DataType: All, Sorted by: name)

Variable name	Used in section	Type	Instance/Network	at	Pin	R/W
EFF_DAILY_FQ[67]	FBD:DAILY_FLOW_TOTAL_STOR>AGE_02	MOVE	.16.7	55,37	OUT	W
EFF_DAILY_FQ[65]	FBD:DAILY_FLOW_TOTAL_STOR>AGE_02	MOVE	.16.10	39,52	IN	R
EFF_DAILY_FQ[66]	FBD:DAILY_FLOW_TOTAL_STOR>AGE_02	MOVE	.16.10	55,52	OUT	W
EFF_DAILY_FQ[64]	FBD:DAILY_FLOW_TOTAL_STOR>AGE_02	MOVE	.16.13	39,67	IN	R
EFF_DAILY_FQ[65]	FBD:DAILY_FLOW_TOTAL_STOR>AGE_02	MOVE	.16.13	55,67	OUT	W
EFF_DAILY_FQ[63]	FBD:DAILY_FLOW_TOTAL_STOR>AGE_02	MOVE	.16.16	39,82	IN	R
EFF_DAILY_FQ[64]	FBD:DAILY_FLOW_TOTAL_STOR>AGE_02	MOVE	.16.16	55,82	OUT	W
EFF_DAILY_FQ[62]	FBD:DAILY_FLOW_TOTAL_STOR>AGE_02	MOVE	.16.19	114,7	IN	R
EFF_DAILY_FQ[63]	FBD:DAILY_FLOW_TOTAL_STOR>AGE_02	MOVE	.16.19	130,7	OUT	W
EFF_DAILY_FQ[61]	FBD:DAILY_FLOW_TOTAL_STOR>AGE_02	MOVE	.16.22	114,22	IN	R
EFF_DAILY_FQ[62]	FBD:DAILY_FLOW_TOTAL_STOR>AGE_02	MOVE	.16.22	130,22	OUT	W
EFF_DAILY_FQ[60]	FBD:DAILY_FLOW_TOTAL_STOR>AGE_02	MOVE	.16.25	114,37	IN	R
EFF_DAILY_FQ[61]	FBD:DAILY_FLOW_TOTAL_STOR>AGE_02	MOVE	.16.25	130,37	OUT	W
EFF_DAILY_FQ[59]	FBD:DAILY_FLOW_TOTAL_STOR>AGE_02	MOVE	.16.28	114,52	IN	R
EFF_DAILY_FQ[60]	FBD:DAILY_FLOW_TOTAL_STOR>AGE_02	MOVE	.16.28	130,52	OUT	W
EFF_DAILY_FQ[58]	FBD:DAILY_FLOW_TOTAL_STOR>AGE_02	MOVE	.16.31	114,67	IN	R
EFF_DAILY_FQ[59]	FBD:DAILY_FLOW_TOTAL_STOR>AGE_02	MOVE	.16.31	130,67	OUT	W
EFF_DAILY_FQ[57]	FBD:DAILY_FLOW_TOTAL_STOR>AGE_02	MOVE	.16.34	114,82	IN	R
EFF_DAILY_FQ[58]	FBD:DAILY_FLOW_TOTAL_STOR>AGE_02	MOVE	.16.34	130,82	OUT	W
EFF_DAILY_FQ[56]	FBD:DAILY_FLOW_TOTAL_STOR>AGE_02	MOVE	.16.37	189,7	IN	R
EFF_DAILY_FQ[57]	FBD:DAILY_FLOW_TOTAL_STOR>AGE_02	MOVE	.16.37	205,7	OUT	W
EFF_DAILY_FQ[55]	FBD:DAILY_FLOW_TOTAL_STOR>AGE_02	MOVE	.16.40	189,22	IN	R
EFF_DAILY_FQ[56]	FBD:DAILY_FLOW_TOTAL_STOR>AGE_02	MOVE	.16.40	205,22	OUT	W
EFF_DAILY_FQ[54]	FBD:DAILY_FLOW_TOTAL_STOR>AGE_02	MOVE	.16.43	189,37	IN	R
EFF_DAILY_FQ[55]	FBD:DAILY_FLOW_TOTAL_STOR>AGE_02	MOVE	.16.43	205,37	OUT	W

table continued...

Variable usage (Name: All, Type: All, DataType: All, Sorted by: name)

Variable name	Used in section	Type	Instance/Network	at	Pin	R/W
EFF_DAILY_FQ[53]	FBD:DAILY_FLOW_TOTAL_STORAGE_02	MOVE	.16.46	189,52	IN	R
EFF_DAILY_FQ[54]	FBD:DAILY_FLOW_TOTAL_STORAGE_02	MOVE	.16.46	205,52	OUT	W
EFF_DAILY_FQ[52]	FBD:DAILY_FLOW_TOTAL_STORAGE_02	MOVE	.16.49	189,67	IN	R
EFF_DAILY_FQ[53]	FBD:DAILY_FLOW_TOTAL_STORAGE_02	MOVE	.16.49	205,67	OUT	W
EFF_DAILY_FQ[51]	FBD:DAILY_FLOW_TOTAL_STORAGE_02	MOVE	.16.52	189,82	IN	R
EFF_DAILY_FQ[52]	FBD:DAILY_FLOW_TOTAL_STORAGE_02	MOVE	.16.52	205,82	OUT	W
EFF_DAILY_FQ[50]	FBD:DAILY_FLOW_TOTAL_STORAGE_02	MOVE	.16.55	264,7	IN	R
EFF_DAILY_FQ[51]	FBD:DAILY_FLOW_TOTAL_STORAGE_02	MOVE	.16.55	280,7	OUT	W
EFF_DAILY_FQ[49]	FBD:DAILY_FLOW_TOTAL_STORAGE_02	MOVE	.16.58	264,22	IN	R
EFF_DAILY_FQ[50]	FBD:DAILY_FLOW_TOTAL_STORAGE_02	MOVE	.16.58	280,22	OUT	W
EFF_DAILY_FQ[48]	FBD:DAILY_FLOW_TOTAL_STORAGE_02	MOVE	.16.61	264,37	IN	R
EFF_DAILY_FQ[49]	FBD:DAILY_FLOW_TOTAL_STORAGE_02	MOVE	.16.61	280,37	OUT	
EFF_DAILY_FQ[47]	FBD:DAILY_FLOW_TOTAL_STORAGE_02	MOVE	.16.64	264,52	IN	R
EFF_DAILY_FQ[48]	FBD:DAILY_FLOW_TOTAL_STORAGE_02	MOVE	.16.64	280,52	OUT	W
EFF_DAILY_FQ[46]	FBD:DAILY_FLOW_TOTAL_STORAGE_02	MOVE	.16.67	264,67	IN	R
EFF_DAILY_FQ[47]	FBD:DAILY_FLOW_TOTAL_STORAGE_02	MOVE	.16.67	280,67	OUT	W
EFF_DAILY_FQ[45]	FBD:DAILY_FLOW_TOTAL_STORAGE_02	MOVE	.16.70	264,82	IN	R
EFF_DAILY_FQ[46]	FBD:DAILY_FLOW_TOTAL_STORAGE_02	MOVE	.16.70	280,82	OUT	W
EFF_DAILY_FQ[44]	FBD:DAILY_FLOW_TOTAL_STORAGE_02	MOVE	.16.73	39,107	IN	R
EFF_DAILY_FQ[45]	FBD:DAILY_FLOW_TOTAL_STORAGE_02	MOVE	.16.73	55,107	OUT	W
EFF_DAILY_FQ[43]	FBD:DAILY_FLOW_TOTAL_STORAGE_02	MOVE	.16.76	39,122	IN	R
EFF_DAILY_FQ[44]	FBD:DAILY_FLOW_TOTAL_STORAGE_02	MOVE	.16.76	55,122	OUT	W
EFF_DAILY_FQ[42]	FBD:DAILY_FLOW_TOTAL_STORAGE_02	MOVE	.16.79	39,137	IN	R
EFF_DAILY_FQ[43]	FBD:DAILY_FLOW_TOTAL_STORAGE_02	MOVE	.16.79	55,137	OUT	W
EFF_DAILY_FQ[41]	FBD:DAILY_FLOW_TOTAL_STORAGE_02	MOVE	.16.82	39,152	IN	

table continued...

Variable usage (Name: All, Type: All, DataType: All, Sorted by: name)

Variable name	Used in section	Type	Instance/Network	at	Pin	R/W
EFF_DAILY_FQ[42]	FBD:DAILY_FLOW_TOTAL_STOR>AGE_02	MOVE	.16.82	55,152	OUT	W
EFF_DAILY_FQ[40]	FBD:DAILY_FLOW_TOTAL_STOR>AGE_02	MOVE	.16.85	39,167	IN	R
EFF_DAILY_FQ[41]	FBD:DAILY_FLOW_TOTAL_STOR>AGE_02	MOVE	.16.85	55,167	OUT	W
EFF_DAILY_FQ[39]	FBD:DAILY_FLOW_TOTAL_STOR>AGE_02	MOVE	.16.88	39,182	IN	R
EFF_DAILY_FQ[40]	FBD:DAILY_FLOW_TOTAL_STOR>AGE_02	MOVE	.16.88	55,182	OUT	W
EFF_DAILY_FQ[38]	FBD:DAILY_FLOW_TOTAL_STOR>AGE_02	MOVE	.16.91	114,107	IN	R
EFF_DAILY_FQ[39]	FBD:DAILY_FLOW_TOTAL_STOR>AGE_02	MOVE	.16.91	130,107	OUT	W
EFF_DAILY_FQ[37]	FBD:DAILY_FLOW_TOTAL_STOR>AGE_02	MOVE	.16.94	114,122	IN	R
EFF_DAILY_FQ[38]	FBD:DAILY_FLOW_TOTAL_STOR>AGE_02	MOVE	.16.94	130,122	OUT	W
EFF_DAILY_FQ[36]	FBD:DAILY_FLOW_TOTAL_STOR>AGE_02	MOVE	.16.97	114,137	IN	R
EFF_DAILY_FQ[37]	FBD:DAILY_FLOW_TOTAL_STOR>AGE_02	MOVE	.16.97	130,137	OUT	W
EFF_DAILY_FQ[35]	FBD:DAILY_FLOW_TOTAL_STOR>AGE_02	MOVE	.16.100	114,152	IN	R
EFF_DAILY_FQ[36]	FBD:DAILY_FLOW_TOTAL_STOR>AGE_02	MOVE	.16.100	130,152	OUT	W
EFF_DAILY_FQ[34]	FBD:DAILY_FLOW_TOTAL_STOR>AGE_02	MOVE	.16.103	114,167	IN	R
EFF_DAILY_FQ[35]	FBD:DAILY_FLOW_TOTAL_STOR>AGE_02	MOVE	.16.103	130,167	OUT	W
EFF_DAILY_FQ[33]	FBD:DAILY_FLOW_TOTAL_STOR>AGE_02	MOVE	.16.106	114,182	IN	R
EFF_DAILY_FQ[34]	FBD:DAILY_FLOW_TOTAL_STOR>AGE_02	MOVE	.16.106	130,182	OUT	W
EFF_DAILY_FQ[32]	FBD:DAILY_FLOW_TOTAL_STOR>AGE_02	MOVE	.16.109	189,107	IN	R
EFF_DAILY_FQ[33]	FBD:DAILY_FLOW_TOTAL_STOR>AGE_02	MOVE	.16.109	205,107	OUT	W
EFF_DAILY_FQ[31]	FBD:DAILY_FLOW_TOTAL_STOR>AGE_02	MOVE	.16.112	189,122	IN	R
EFF_DAILY_FQ[32]	FBD:DAILY_FLOW_TOTAL_STOR>AGE_02	MOVE	.16.112	205,122	OUT	W
EFF_DAILY_FQ[30]	FBD:DAILY_FLOW_TOTAL_STOR>AGE_02	MOVE	.16.115	189,137	IN	R
EFF_DAILY_FQ[31]	FBD:DAILY_FLOW_TOTAL_STOR>AGE_02	MOVE	.16.115	205,137	OUT	W
EFF_DAILY_FQ[29]	FBD:DAILY_FLOW_TOTAL_STOR>AGE_02	MOVE	.16.118	189,152	IN	R
EFF_DAILY_FQ[30]	FBD:DAILY_FLOW_TOTAL_STOR>AGE_02	MOVE	.16.118	205,152	OUT	W

table continued...

Variable usage (Name: All, Type: All, DataType: All, Sorted by: name)

Variable name	Used in section	Type	Instance/Network	at	Pin	R/W
EFF_DAILY_FQ[28]	FBD:DAILY_FLOW_TOTAL_STOR>AGE_02	MOVE	.16.121	189,167	IN	R
EFF_DAILY_FQ[29]	FBD:DAILY_FLOW_TOTAL_STOR>AGE_02	MOVE	.16.121	205,167	OUT	W
EFF_DAILY_FQ[27]	FBD:DAILY_FLOW_TOTAL_STOR>AGE_02	MOVE	.16.124	189,182	IN	R
EFF_DAILY_FQ[28]	FBD:DAILY_FLOW_TOTAL_STOR>AGE_02	MOVE	.16.124	205,182	OUT	W
EFF_DAILY_FQ[26]	FBD:DAILY_FLOW_TOTAL_STOR>AGE_02	MOVE	.16.127	264,107	IN	R
EFF_DAILY_FQ[27]	FBD:DAILY_FLOW_TOTAL_STOR>AGE_02	MOVE	.16.127	280,107	OUT	W
EFF_DAILY_FQ[25]	FBD:DAILY_FLOW_TOTAL_STOR>AGE_02	MOVE	.16.130	264,122	IN	R
EFF_DAILY_FQ[26]	FBD:DAILY_FLOW_TOTAL_STOR>AGE_02	MOVE	.16.130	280,122	OUT	W
EFF_DAILY_FQ[24]	FBD:DAILY_FLOW_TOTAL_STOR>AGE_02	MOVE	.16.133	264,137	IN	R
EFF_DAILY_FQ[25]	FBD:DAILY_FLOW_TOTAL_STOR>AGE_02	MOVE	.16.133	280,137	OUT	W
EFF_DAILY_FQ[23]	FBD:DAILY_FLOW_TOTAL_STOR>AGE_02	MOVE	.16.136	264,152	IN	R
EFF_DAILY_FQ[24]	FBD:DAILY_FLOW_TOTAL_STOR>AGE_02	MOVE	.16.136	280,152	OUT	
EFF_DAILY_FQ[22]	FBD:DAILY_FLOW_TOTAL_STOR>AGE_02	MOVE	.16.139	264,167	IN	R
EFF_DAILY_FQ[23]	FBD:DAILY_FLOW_TOTAL_STOR>AGE_02	MOVE	.16.139	280,167	OUT	W
EFF_DAILY_FQ[21]	FBD:DAILY_FLOW_TOTAL_STOR>AGE_02	MOVE	.16.142	264,182	IN	R
EFF_DAILY_FQ[22]	FBD:DAILY_FLOW_TOTAL_STOR>AGE_02	MOVE	.16.142	280,182	OUT	W
EFF_DAILY_FQ[20]	FBD:DAILY_FLOW_TOTAL_STOR>AGE_02	MOVE	.16.145	39,207	IN	R
EFF_DAILY_FQ[21]	FBD:DAILY_FLOW_TOTAL_STOR>AGE_02	MOVE	.16.145	55,207	OUT	W
EFF_DAILY_FQ[19]	FBD:DAILY_FLOW_TOTAL_STOR>AGE_02	MOVE	.16.148	39,222	IN	R
EFF_DAILY_FQ[20]	FBD:DAILY_FLOW_TOTAL_STOR>AGE_02	MOVE	.16.148	55,222	OUT	W
EFF_DAILY_FQ[18]	FBD:DAILY_FLOW_TOTAL_STOR>AGE_02	MOVE	.16.151	114,207	IN	R
EFF_DAILY_FQ[19]	FBD:DAILY_FLOW_TOTAL_STOR>AGE_02	MOVE	.16.151	130,207	OUT	W
EFF_DAILY_FQ[17]	FBD:DAILY_FLOW_TOTAL_STOR>AGE_02	MOVE	.16.154	114,222	IN	R
EFF_DAILY_FQ[18]	FBD:DAILY_FLOW_TOTAL_STOR>AGE_02	MOVE	.16.154	130,222	OUT	W
EFF_DAILY_FQ[16]	FBD:DAILY_FLOW_TOTAL_STOR>AGE_02	MOVE	.16.157	189,207	IN	

table continued...

Variable usage (Name: All, Type: All, DataType: All, Sorted by: name)

Variable name	Used in section	Type	Instance/Network	at	Pin	R/W
EFF_DAILY_FQ[17]	FBD:DAILY_FLOW_TOTAL_STOR>AGE_02	MOVE	.16.157	205,207	OUT	W
EFF_DAILY_FQ[15]	FBD:DAILY_FLOW_TOTAL_STOR>AGE_02	MOVE	.16.160	189,222	IN	R
EFF_DAILY_FQ[16]	FBD:DAILY_FLOW_TOTAL_STOR>AGE_02	MOVE	.16.160	205,222	OUT	W
EFF_DAILY_FQ[14]	FBD:DAILY_FLOW_TOTAL_STOR>AGE_02	MOVE	.16.163	264,207	IN	R
EFF_DAILY_FQ[15]	FBD:DAILY_FLOW_TOTAL_STOR>AGE_02	MOVE	.16.163	280,207	OUT	W
EFF_DAILY_FQ[13]	FBD:DAILY_FLOW_TOTAL_STOR>AGE_02	MOVE	.16.166	264,222	IN	R
EFF_DAILY_FQ[14]	FBD:DAILY_FLOW_TOTAL_STOR>AGE_02	MOVE	.16.166	280,222	OUT	W
EFF_DAILY_FQ[12]	FBD:DAILY_FLOW_TOTAL_STOR>AGE_03	MOVE	.17.1	39,7	IN	R
EFF_DAILY_FQ[13]	FBD:DAILY_FLOW_TOTAL_STOR>AGE_03	MOVE	.17.1	55,7	OUT	W
EFF_DAILY_FQ[11]	FBD:DAILY_FLOW_TOTAL_STOR>AGE_03	MOVE	.17.4	39,22	IN	R
EFF_DAILY_FQ[12]	FBD:DAILY_FLOW_TOTAL_STOR>AGE_03	MOVE	.17.4	55,22	OUT	W
EFF_DAILY_FQ[10]	FBD:DAILY_FLOW_TOTAL_STOR>AGE_03	MOVE	.17.7	39,37	IN	R
EFF_DAILY_FQ[11]	FBD:DAILY_FLOW_TOTAL_STOR>AGE_03	MOVE	.17.7	55,37	OUT	W
EFF_DAILY_FQ[9]	FBD:DAILY_FLOW_TOTAL_STOR>AGE_03	MOVE	.17.10	39,52	IN	R
EFF_DAILY_FQ[10]	FBD:DAILY_FLOW_TOTAL_STOR>AGE_03	MOVE	.17.10	55,52	OUT	W
EFF_DAILY_FQ[8]	FBD:DAILY_FLOW_TOTAL_STOR>AGE_03	MOVE	.17.13	39,67	IN	R
EFF_DAILY_FQ[9]	FBD:DAILY_FLOW_TOTAL_STOR>AGE_03	MOVE	.17.13	55,67	OUT	W
EFF_DAILY_FQ[7]	FBD:DAILY_FLOW_TOTAL_STOR>AGE_03	MOVE	.17.16	39,82	IN	R
EFF_DAILY_FQ[8]	FBD:DAILY_FLOW_TOTAL_STOR>AGE_03	MOVE	.17.16	55,82	OUT	W
EFF_DAILY_FQ[6]	FBD:DAILY_FLOW_TOTAL_STOR>AGE_03	MOVE	.17.19	114,7	IN	R
EFF_DAILY_FQ[7]	FBD:DAILY_FLOW_TOTAL_STOR>AGE_03	MOVE	.17.19	130,7	OUT	W
EFF_DAILY_FQ[5]	FBD:DAILY_FLOW_TOTAL_STOR>AGE_03	MOVE	.17.22	114,22	IN	R
EFF_DAILY_FQ[6]	FBD:DAILY_FLOW_TOTAL_STOR>AGE_03	MOVE	.17.22	130,22	OUT	W
EFF_DAILY_FQ[4]	FBD:DAILY_FLOW_TOTAL_STOR>AGE_03	MOVE	.17.25	114,37	IN	R
EFF_DAILY_FQ[5]	FBD:DAILY_FLOW_TOTAL_STOR>AGE_03	MOVE	.17.25	130,37	OUT	W

table continued...

Variable usage (Name: All, Type: All, DataType: All, Sorted by: name)

Variable name	Used in section	Type	Instance/Network	at	Pin	R/W
EFF_DAILY_FQ[3]	FBD:DAILY_FLOW_TOTAL_STOR>AGE_03	MOVE	.17.28	114,52	IN	R
EFF_DAILY_FQ[4]	FBD:DAILY_FLOW_TOTAL_STOR>AGE_03	MOVE	.17.28	130,52	OUT	W
EFF_DAILY_FQ[2]	FBD:DAILY_FLOW_TOTAL_STOR>AGE_03	MOVE	.17.31	114,67	IN	R
EFF_DAILY_FQ[3]	FBD:DAILY_FLOW_TOTAL_STOR>AGE_03	MOVE	.17.31	130,67	OUT	W
EFF_DAILY_FQ[1]	FBD:DAILY_FLOW_TOTAL_STOR>AGE_03	MOVE	.17.34	114,82	IN	R
EFF_DAILY_FQ[2]	FBD:DAILY_FLOW_TOTAL_STOR>AGE_03	MOVE	.17.34	130,82	OUT	W
EFF_DAILY_FQ[1]	FBD:DAILY_FLOW_TOTAL_STOR>AGE_03	REAL_TO_DINT	.17.37	98,95	OUT	W
EFF_DAILY_FQ_LEQ_TH	LD:SHUTDOWN	TOTALIZER	FBI_8_12	101,29	OUT	W
EFF_DAILY_FQ_RET	FBD:DAILY_FLOW_TOTAL_STOR>AGE_03	REAL_TO_DINT	.17.37	79,95	IN	R
	LD:SHUTDOWN	MOVE	.8.9	98,37	OUT	W
EFF_DAILY_TOT_INFO.done	LD:SHUTDOWN	NO_CONTACT	.8.8	3,38	IN	R
EFF_DAILY_TOT_INFO.outc	LD:SHUTDOWN	MOVE	.8.9	82,37	IN	R
	LD:SHUTDOWN	TOTALIZER	FBI_8_12	101,30	INFO	W
EFF_DAILY_TOT_MODE	LD:SHUTDOWN	TOTALIZER	FBI_8_12	82,30	MODE	R
EFF_DAILY_TOT_PARA	LD:SHUTDOWN	TOTALIZER	FBI_8_12	82,31	PARA	R
EFF_DAILY_TOT_STAT	LD:SHUTDOWN	TOTALIZER	FBI_8_12	101,31	STATUS	W
EFF_DAILY_TOT_TRI	LD:SHUTDOWN	TOTALIZER	FBI_8_12	82,32	TR_I	R
EFF_DAILY_TOT_TRS	LD:SHUTDOWN	NO_CONTACT	.8.160	3,33	IN	R
EFF_FIT_FAIL	LD:DISCHARGE_WETWELL_AND_>PUMP	COIL	FBI_5_359	99,64	Q	W
EFF_FIT_FAIL_DI	LD:DISCHARGE_WETWELL_AND_>PUMP	NC_CONTACT	.5.355	11,67	IN	R
EFF_FQAH	LD:SHUTDOWN	NO_CONTACT	.8.6	3,39	IN	R
	LD:SHUTDOWN	COIL	FBI_8_7	99,38	Q	W
	LD:SHUTDOWN	NO_CONTACT	.8.20	3,1	IN	R
	LD:SHUTDOWN	NO_CONTACT	.8.155	19,22	IN	R
	LD:AD_ALARMS	NO_CONTACT	.6.102	11,57	IN	R
EFF_FQH_RESTART	LD:SHUTDOWN	COIL	FBI_8_157	99,22	Q	W
	LD:SHUTDOWN	NC_CONTACT	.8.158	19,20	IN	R
EFF_FQ_LEQ_TH	LD:DISCHARGE_WETWELL_AND_>PUMP	TOTALIZER	FBI_5_341	101,48	OUT	W
EFF_PUMP_AUTO_HMI	LD:DISCHARGE_WETWELL_AND_>PUMP	NO_CONTACT	.5.274	27,3	IN	R
	LD:DISCHARGE_WETWELL_AND_>PUMP	NC_CONTACT	.5.278	27,1	IN	R
EFF_PUMP_CTR	LD:DISCHARGE_WETWELL_AND_>PUMP	COIL	FBI_5_296	91,9	Q	W
	LD:DISCHARGE_WETWELL_AND_>PUMP	NO_CONTACT	.5.347	3,18	IN	R
EFF_PUMP_FAIL	LD:DISCHARGE_WETWELL_AND_>PUMP	NO_CONTACT	.5.283	11,25	IN	R
	LD:DISCHARGE_WETWELL_AND_>	COIL	FBI_5_333	91,24	Q	

table continued...

Variable usage (Name: All, Type: All, DataType: All, Sorted by: name)

Variable name	Used in section	Type	Instance/Network	at	Pin	R/W
	PUMP					
	LD:DISCHARGE_WETWELL_AND_> PUMP	NC_CONTACT	.5.339	19,27	IN	R
	LD:AD_ALARMS	NO_CONTACT	.6.110	11,51	IN	R
EFF_PUMP_FAIL_DI	LD:DISCHARGE_WETWELL_AND_> PUMP	NC_CONTACT	.5.298	19,13	IN	R
EFF_PUMP_FTS_TACC_SEC	LD:DISCHARGE_WETWELL_AND_> PUMP	DIV_DINT	.5.353	99,19	OUT	W
EFF_PUMP_FTS_TDN	LD:DISCHARGE_WETWELL_AND_> PUMP	TON	FBI_5_348	58,19	Q	W
	LD:DISCHARGE_WETWELL_AND_> PUMP	NO_CONTACT	.5.354	27,24	IN	R
EFF_PUMP_FTS_TPRE_SEC	LD:DISCHARGE_WETWELL_AND_> PUMP	MUL_DINT	.5.350	10,22	IN1	R
EFF_PUMP_IN_AUTO	LD:DISCHARGE_WETWELL_AND_> PUMP	COIL	FBI_5_273	91,3	Q	W
	LD:DISCHARGE_WETWELL_AND_> PUMP	NO_CONTACT	.5.290	3,37	IN	R
	LD:DISCHARGE_WETWELL_AND_> PUMP	NO_CONTACT	.5.337	3,27	IN	R
EFF_PUMP_IN_MANUAL	LD:DISCHARGE_WETWELL_AND_> PUMP	NO_CONTACT	.5.272	3,6	IN	R
	LD:DISCHARGE_WETWELL_AND_> PUMP	COIL	FBI_5_276	91,1	Q	W
EFF_PUMP_IN_REMOTE	LD:DISCHARGE_WETWELL_AND_> PUMP	NO_CONTACT	.5.275	3,3	IN	R
	LD:DISCHARGE_WETWELL_AND_> PUMP	NO_CONTACT	.5.277	3,1	IN	R
EFF_PUMP_ON	LD:DISCHARGE_WETWELL_AND_> PUMP	NC_CONTACT	.5.349	27,18	IN	R
EFF_PUMP_READY	LD:SHUTDOWN	NC_CONTACT	.8.159	3,5	IN	R
	LD:DISCHARGE_WETWELL_AND_> PUMP	COIL	FBI_5_340	91,27	Q	W
EFF_PUMP_START_HMI	LD:DISCHARGE_WETWELL_AND_> PUMP	NO_CONTACT	.5.270	27,6	IN	R
EFF_PUMP_START_INTERNAL_MA	LD:DISCHARGE_WETWELL_AND_> PUMP	COIL	FBI_5_271	91,6	Q	W
	LD:DISCHARGE_WETWELL_AND_> PUMP	NO_CONTACT	.5.280	3,9	IN	R
EFF_PUMP_START_INTERN_AUTO	LD:DISCHARGE_WETWELL_AND_> PUMP	NO_CONTACT	.5.279	3,10	IN	R
	LD:DISCHARGE_WETWELL_AND_> PUMP	COIL	FBI_5_293	91,37	Q	W
	LD:DISCHARGE_WETWELL_AND_> PUMP	NO_CONTACT	.5.304	19,38	IN	R
EFF_PUMP_START_LEVEL_SP	LD:DISCHARGE_WETWELL_AND_> PUMP	COMP_DB	FBI_5_51	50,33	IN2	R
EFF_PUMP_STOP_LEVEL_SP	LD:DISCHARGE_WETWELL_AND_> PUMP	COMP_DB	FBI_5_52	82,33	IN2	R
EFF_PUMP_TIMER_ACC	LD:DISCHARGE_WETWELL_AND_>	TON	FBI_5_39	98,15	ET	W

table continued...

Variable usage (Name: All, Type: All, DataType: All, Sorted by: name)

Variable name	Used in section	Type	Instance/Network	at	Pin	R/W
	PUMP					
EFF_PUMP_TIMER_DN	LD:DISCHARGE_WETWELL_AND_> PUMP	TON	FBI_5_39	98,14	Q	W
	LD:DISCHARGE_WETWELL_AND_> PUMP	NO_CONTACT	.5.285	11,24	IN	R
EFF_SUMP_HL_ALARM	LD:SHUTDOWN	COIL	FBI_8_29	99,62	Q	W
	LD:SHUTDOWN	NO_CONTACT	.8.32	3,63	IN	R
	LD:SHUTDOWN	NO_CONTACT	.8.34	3,4	IN	R
	LD:AD_ALARMS	NO_CONTACT	.6.75	11,50	IN	R
EFF_SUMP_HL_ALARM_SP	LD:SHUTDOWN	COMP_DB	FBI_8_28	82,59	IN2	R
EFF_SUMP_LEVEL	LD:SHUTDOWN	COMP_DB	FBI_8_28	82,58	IN1	R
	LD:DISCHARGE_WETWELL_AND_> PUMP	COMP_DB	FBI_5_51	50,32	IN1	R
	LD:DISCHARGE_WETWELL_AND_> PUMP	COMP_DB	FBI_5_52	82,32	IN1	R
	LD:ANALOG	SCALING	FBI_1_51	61,33	OUT	W
EFF_SUMP_LEVEL_PARA	LD:ANALOG	SCALING	FBI_1_51	42,34	PARA	R
EFF_SUMP_LEVEL_RAW	LD:SHUTDOWN	W_INT_REAL	FBI_8_145	10,105	IN	R
	LD:ANALOG	W_INT_REAL	FBI_1_52	18,33	IN	R
EFF_SUMP_LIT_FAIL	LD:SHUTDOWN	COIL	FBI_8_143	91,106	Q	W
	LD:SHUTDOWN	NO_CONTACT	.8.162	3,110	IN	R
	LD:DISCHARGE_WETWELL_AND_> PUMP	NO_CONTACT	.5.336	19,14	IN	R
EFF_SUMP_LIT_FAIL_DI	LD:SHUTDOWN	NC_CONTACT	.8.147	3,108	IN	R
EFF_TOT_INFO	LD:DISCHARGE_WETWELL_AND_> PUMP	TOTALIZER	FBI_5_341	101,49	INFO	W
EFF_TOT_INFO.outc	LD:DISCHARGE_WETWELL_AND_> PUMP	MOVE	.5.344	82,56	IN	R
EFF_TOT_MODE	LD:DISCHARGE_WETWELL_AND_> PUMP	TOTALIZER	FBI_5_341	82,49	MODE	R
EFF_TOT_PARA	LD:DISCHARGE_WETWELL_AND_> PUMP	TOTALIZER	FBI_5_341	82,50	PARA	R
EFF_TOT_STAT	LD:DISCHARGE_WETWELL_AND_> PUMP	TOTALIZER	FBI_5_341	101,50	STATUS	W
EFF_TOT_TRI	LD:DISCHARGE_WETWELL_AND_> PUMP	TOTALIZER	FBI_5_341	82,51	TR_I	R
EFF_TOT_TRS	LD:SYS_OH	RESET_COIL	FBI_7_36	99,31	Q	W
	LD:SYS_OH	NO_CONTACT	.7.38	3,32	IN	R
	LD:DISCHARGE_WETWELL_AND_> PUMP	NO_CONTACT	.5.345	3,51	IN	R
EW1_FLOW_TIMER_ACC	LD:EXTRACTION_WELLS	TON	FBI_2_280	34,171	ET	W
EW1_FLOW_TIMER_DN	LD:EXTRACTION_WELLS	TON	FBI_2_280	34,170	Q	W
	LD:EXTRACTION_WELLS	NO_CONTACT	.2.282	43,168	IN	R
	LD:EXTRACTION_WELLS	NC_CONTACT	.2.283	11,169	IN	R
EW1_FQ	LD:EXTRACTION_WELLS	ADD_REAL	.2.281	107,170	OUT	W
	LD:EXTRACTION_WELLS	ADD_REAL	.2.281	90,171	IN2	R
	LD:EXTRACTION_WELLS	ADD_REAL	.2.319	50,225	IN1	R
EW1_FTS	LD:EXTRACTION_WELLS	COIL	FBI_2_364	171,11	Q	W
	LD:EXTRACTION_WELLS	NO_CONTACT	.2.367	3,12	IN	R
	LD:EXTRACTION_WELLS	NC_CONTACT	.2.427	3,14	IN	R

table continued...

Variable usage (Name: All, Type: All, DataType: All, Sorted by: name)

Variable name	Used in section	Type	Instance/Network	at	Pin	R/W
	LD:AD_ALARMS	NO_CONTACT	.6.95	11,16	IN	R
EW1_FTS_TACC_SEC	LD:EXTRACTION_WELLS	DIV_DINT	.2.378	171,6	OUT	W
EW1_FTS_TDN	LD:EXTRACTION_WELLS	TON	p	98,6	Q	W
	LD:EXTRACTION_WELLS	NO_CONTACT	.2.365	3,11	IN	R
EW1_FTS_TPRE_SEC	LD:EXTRACTION_WELLS	MUL_DINT	.2.351	50,9	IN1	R
EW1_GAL_PER_SECOND	LD:EXTRACTION_WELLS	ADD_REAL	.2.281	90,170	IN1	R
	LD:EXTRACTION_WELLS	DIV_REAL	.2.286	35,165	OUT	W
EW1_ON	LD:BAGFILTER_SCALENT_VGAC	NO_CONTACT	.3.41	35,26	IN	R
	LD:EXTRACTION_WELLS	NO_CONTACT	.2.327	67,168	IN	R
	LD:EXTRACTION_WELLS	NO_CONTACT	.2.332	3,223	IN	R
	LD:EXTRACTION_WELLS	NC_CONTACT	.2.350	27,5	IN	R
	LD:EXTRACTION_WELLS	NO_CONTACT	.2.544	67,143	IN	R
EW1_PAH_114	LD:EXTRACTION_WELLS	COIL	FBI_2_553	171,23	Q	W
	LD:EXTRACTION_WELLS	NC_CONTACT	.2.558	91,14	IN	R
	LD:EXTRACTION_WELLS	NO_CONTACT	.2.584	3,24	IN	R
	LD:AD_ALARMS	NO_CONTACT	.6.25	11,23	IN	R
EW1_PAH_SP	LD:EXTRACTION_WELLS	COMP_DB	FBI_2_552	82,20	IN2	R
EW1_PUMPSPEED_RAW	LD:ANALOG	W_INT_REAL	FBI_1_63	18,58	IN	R
EW1_PUMP_DISCHARGE_FLOW	LD:EXTRACTION_WELLS	DIV_REAL	.2.286	18,165	IN1	R
	LD:EXTRACTION_WELLS	ADD_REAL	.2.534	10,147	IN1	R
	LD:ANALOG	SCALING	FBI_1_72	61,70	OUT	W
EW1_PUMP_DISCHARGE_FLOW_PARA	LD:ANALOG	SCALING	FBI_1_72	42,71	PARA	R
EW1_PUMP_DISCHARGE_FLOW_RAW	LD:ANALOG	W_INT_REAL	FBI_1_71	18,70	IN	R
EW1_PUMP_DISCHARGE_PRESSURE	LD:EXTRACTION_WELLS	COMP_DB	FBI_2_552	82,19	IN1	R
	LD:ANALOG	SCALING	FBI_1_69	61,64	OUT	W
EW1_PUMP_DISCHARGE_PRESSURE_PARA	LD:ANALOG	SCALING	FBI_1_69	42,65	PARA	R
EW1_PUMP_DISCHARGE_PRESSURE_RAW	LD:ANALOG	W_INT_REAL	FBI_1_70	18,64	IN	R
EW1_PUMP_ENABLED	LD:EXTRACTION_WELLS	COIL	FBI_2_339	171,1	Q	W
	LD:EXTRACTION_WELLS	NO_CONTACT	.2.347	3,5	IN	R
EW1_PUMP_FAILED_STATUS	LD:EXTRACTION_WELLS	NC_CONTACT	.2.428	11,14	IN	R
	LD:AD_ALARMS	NO_CONTACT	.6.1	11,6	IN	R
EW1_PUMP_IN_AUTO	LD:EXTRACTION_WELLS	NO_CONTACT	.2.346	3,1	IN	R
	LD:EXTRACTION_WELLS	NO_CONTACT	.2.438	67,14	IN	R
EW1_PUMP_SPEED_COMMAND	LD:ANALOG	REAL_TO_INT	.1.111	61,149	OUT	W
EW1_PUMP_SPEED_COMMAND_HMI	LD:ANALOG	SCALING	FBI_1_102	18,149	IN	R
EW1_PUMP_SPEED_COMMAND_PARA	LD:ANALOG	SCALING	FBI_1_102	18,150	PARA	R
EW1_PUMP_SPEED_FB	LD:ANALOG	SCALING	FBI_1_64	61,58	OUT	W
EW1_PUMP_SPEED_FB_PARA	LD:ANALOG	SCALING	FBI_1_64	42,59	PARA	R
EW1_READY	LD:SHUTDOWN	NO_CONTACT	.8.127	3,94	IN	R
	LD:EXTRACTION_WELLS	COIL	FBI_2_434	171,14	Q	W
	LD:EXTRACTION_WELLS	NO_CONTACT	.2.435	19,1	IN	R
EW1_WELL_VAULT_HIGHLEVEL_ALARM	LD:EXTRACTION_WELLS	NO_CONTACT	.2.525	35,14	IN	R
	LD:AD_ALARMS	NC_CONTACT	.6.89	11,11	IN	R
EW2_FLOW_TIMER_ACC	LD:EXTRACTION_WELLS	TON	FBI_2_298	50,183	ET	W
EW2_FLOW_TIMER_DN	LD:EXTRACTION_WELLS	NO_CONTACT	.2.296	59,180	IN	R
	LD:EXTRACTION_WELLS	TON	FBI_2_298	50,182	Q	W
	LD:EXTRACTION_WELLS	NC_CONTACT	.2.299	11,181	IN	R
EW2_FQ	LD:EXTRACTION_WELLS	ADD_REAL	.2.297	107,182	OUT	W
	LD:EXTRACTION_WELLS	ADD_REAL	.2.297	90,183	IN2	R
	LD:EXTRACTION_WELLS	ADD_REAL	.2.319	50,226	IN2	R

table continued...

Variable usage (Name: All, Type: All, DataType: All, Sorted by: name)

Variable name	Used in section	Type	Instance/Network	at	Pin	R/W
EW2_FTS	LD:EXTRACTION_WELLS	NC_CONTACT	.2.444	3,41	IN	R
	LD:EXTRACTION_WELLS	NO_CONTACT	.2.447	3,39	IN	R
	LD:EXTRACTION_WELLS	COIL	FBI_2_450	171,38	Q	W
	LD:AD_ALARMS	NO_CONTACT	.6.97	11,17	IN	R
EW2_FTS_TACC_SEC	LD:EXTRACTION_WELLS	DIV_DINT	.2.445	171,33	OUT	W
EW2_FTS_TDN	LD:EXTRACTION_WELLS	NO_CONTACT	.2.449	3,38	IN	R
	LD:EXTRACTION_WELLS	TON	FBI_2_455	98,33	Q	W
EW2_FTS_TPRE_SEC	LD:EXTRACTION_WELLS	MUL_DINT	.2.453	50,36	IN1	R
EW2_GAL_PER_SECOND	LD:EXTRACTION_WELLS	DIV_REAL	.2.295	51,177	OUT	W
	LD:EXTRACTION_WELLS	ADD_REAL	.2.297	90,182	IN1	R
EW2_ON	LD:BAGFILTER_SCALENT_VGAC	NO_CONTACT	.3.44	35,27	IN	R
	LD:EXTRACTION_WELLS	NO_CONTACT	.2.328	75,180	IN	R
	LD:EXTRACTION_WELLS	NO_CONTACT	.2.333	3,224	IN	R
	LD:EXTRACTION_WELLS	NC_CONTACT	.2.454	27,32	IN	R
	LD:EXTRACTION_WELLS	NO_CONTACT	.2.545	67,144	IN	R
EW2_PAH_124	LD:EXTRACTION_WELLS	COIL	FBI_2_562	171,51	Q	W
	LD:EXTRACTION_WELLS	NC_CONTACT	.2.564	91,41	IN	R
	LD:EXTRACTION_WELLS	NO_CONTACT	.2.589	3,52	IN	R
	LD:AD_ALARMS	NO_CONTACT	.6.26	11,24	IN	R
EW2_PAH_SP	LD:EXTRACTION_WELLS	COMP_DB	FBI_2_563	82,48	IN2	R
EW2_PUMPSPEED_FEEDBACK_PARA	LD:ANALOG	SCALING	FBI_1_84	42,111	PARA	R
EW2_PUMPSPEED_FEEDBACK_RAW	LD:ANALOG	W_INT_REAL	FBI_1_83	18,110	IN	R
EW2_PUMP_DISCHARGE_FLOW	LD:EXTRACTION_WELLS	DIV_REAL	.2.295	34,177	IN1	
	LD:EXTRACTION_WELLS	ADD_REAL	.2.534	10,148	IN2	R
	LD:ANALOG	SCALING	FBI_1_75	61,82	OUT	W
EW2_PUMP_DISCHARGE_FLOW_PARA	LD:ANALOG	SCALING	FBI_1_75	42,83	PARA	R
EW2_PUMP_DISCHARGE_FLOW_RAW	LD:ANALOG	W_INT_REAL	FBI_1_76	18,82	IN	R
EW2_PUMP_DISCHARGE_PRESSURE	LD:EXTRACTION_WELLS	COMP_DB	FBI_2_563	82,47	IN1	R
	LD:ANALOG	SCALING	FBI_1_73	61,76	OUT	W
EW2_PUMP_DISCHARGE_PRESSURE_PARA	LD:ANALOG	SCALING	FBI_1_73	42,77	PARA	R
EW2_PUMP_DISCHARGE_PRESS_RAW	LD:ANALOG	W_INT_REAL	FBI_1_74	18,76	IN	R
EW2_PUMP_ENABLED	LD:EXTRACTION_WELLS	NO_CONTACT	.2.456	3,32	IN	R
	LD:EXTRACTION_WELLS	COIL	FBI_2_459	171,28	Q	W
EW2_PUMP_FAILED_STATUS	LD:EXTRACTION_WELLS	NC_CONTACT	.2.443	11,41	IN	R
	LD:AD_ALARMS	NO_CONTACT	.6.2	11,7	IN	R
EW2_PUMP_IN_AUTO	LD:EXTRACTION_WELLS	NO_CONTACT	.2.439	59,41	IN	R
	LD:EXTRACTION_WELLS	NO_CONTACT	.2.457	3,28	IN	R
EW2_PUMP_SPEED_COMMAND	LD:ANALOG	REAL_TO_INT	.1.110	61,155	OUT	W
EW2_PUMP_SPEED_COMMAND_HMI	LD:ANALOG	SCALING	FBI_1_105	18,155	IN	R
EW2_PUMP_SPEED_COMMAND_PARA	LD:ANALOG	SCALING	FBI_1_105	18,156	PARA	R
EW2_PUMP_SPEED_FB	LD:ANALOG	SCALING	FBI_1_84	61,110	OUT	W
EW2_READY	LD:SHUTDOWN	NO_CONTACT	.8.128	3,95	IN	R
	LD:EXTRACTION_WELLS	NO_CONTACT	.2.440	19,28	IN	R
	LD:EXTRACTION_WELLS	COIL	FBI_2_441	171,41	Q	W
EW2_WELL_VAULT_HIGHLEVEL_ALARM	LD:EXTRACTION_WELLS	NO_CONTACT	.2.526	35,41	IN	R
	LD:AD_ALARMS	NC_CONTACT	.6.90	11,12	IN	R
EW3_FLOW_TIMER_ACC	LD:EXTRACTION_WELLS	TON	FBI_2_305	50,197	ET	W
EW3_FLOW_TIMER_DN	LD:EXTRACTION_WELLS	NC_CONTACT	.2.304	11,195	IN	R
	LD:EXTRACTION_WELLS	TON	FBI_2_305	50,196	Q	
	LD:EXTRACTION_WELLS	NO_CONTACT	.2.307	59,194	IN	

table continued...

Variable usage (Name: All, Type: All, DataType: All, Sorted by: name)

Variable name	Used in section	Type	Instance/Network	at	Pin	R/W
EW3_FQ	LD:EXTRACTION_WELLS	ADD_REAL	.2.306	107,196	OUT	W
	LD:EXTRACTION_WELLS	ADD_REAL	.2.306	90,197	IN2	R
	LD:EXTRACTION_WELLS	ADD_REAL	.2.319	50,227	IN3	R
EW3_FTS	LD:EXTRACTION_WELLS	COIL	FBI_2_469	171,66	Q	W
	LD:EXTRACTION_WELLS	NO_CONTACT	.2.472	3,67	IN	R
	LD:EXTRACTION_WELLS	NC_CONTACT	.2.475	3,69	IN	R
	LD:AD_ALARMS	NO_CONTACT	.6.98	11,18	IN	R
EW3_FTS_TACC_SEC	LD:EXTRACTION_WELLS	DIV_DINT	.2.474	171,61	OUT	W
EW3_FTS_TDN	LD:EXTRACTION_WELLS	TON	FBI_2_464	98,61	Q	W
	LD:EXTRACTION_WELLS	NO_CONTACT	.2.470	3,66	IN	R
EW3_FTS_TPRE_SEC	LD:EXTRACTION_WELLS	MUL_DINT	.2.466	50,64	IN1	R
EW3_GAL_PER_SECOND	LD:EXTRACTION_WELLS	ADD_REAL	.2.306	90,196	IN1	R
	LD:EXTRACTION_WELLS	DIV_REAL	.2.308	51,191	OUT	W
EW3_ON	LD:BAGFILTER_SCALENT_VGAC	NO_CONTACT	.3.45	35,28	IN	R
	LD:EXTRACTION_WELLS	NO_CONTACT	.2.329	75,194	IN	R
	LD:EXTRACTION_WELLS	NO_CONTACT	.2.334	3,225	IN	R
	LD:EXTRACTION_WELLS	NC_CONTACT	.2.465	27,60	IN	R
	LD:EXTRACTION_WELLS	NO_CONTACT	.2.546	67,145	IN	R
EW3_PAH_134	LD:EXTRACTION_WELLS	COIL	FBI_2_566	171,79	Q	W
	LD:EXTRACTION_WELLS	NC_CONTACT	.2.575	91,69	IN	R
	LD:EXTRACTION_WELLS	NO_CONTACT	.2.592	3,80	IN	R
	LD:AD_ALARMS	NO_CONTACT	.6.27	11,25	IN	R
EW3_PAH_SP	LD:EXTRACTION_WELLS	COMP_DB	FBI_2_565	82,76	IN2	R
EW3_PUMPSPEED_FB	LD:ANALOG	SCALING	FBI_1_61	61,6	OUT	W
EW3_PUMPSPEED_FB_PARA	LD:ANALOG	SCALING	FBI_1_61	42,7	PARA	R
EW3_PUMPSPEED_RAW	LD:ANALOG	W_INT_REAL	FBI_1_62	18,6	IN	R
EW3_PUMP_DISCHARGE_FLOW	LD:EXTRACTION_WELLS	DIV_REAL	.2.308	34,191	IN1	R
	LD:EXTRACTION_WELLS	ADD_REAL	.2.534	10,149	IN3	R
	LD:ANALOG	SCALING	FBI_1_80	61,94	OUT	W
EW3_PUMP_DISCHARGE_FLOW_PARA	LD:ANALOG	SCALING	FBI_1_80	42,95	PARA	R
EW3_PUMP_DISCHARGE_FLOW_RAW	LD:ANALOG	W_INT_REAL	FBI_1_79	18,94	IN	R
EW3_PUMP_DISCHARGE_PRESSURE	LD:EXTRACTION_WELLS	COMP_DB	FBI_2_565	82,75	IN1	R
	LD:ANALOG	SCALING	FBI_1_78	61,88	OUT	W
EW3_PUMP_DISCHARGE_PRESSURE_PARA	LD:ANALOG	SCALING	FBI_1_78	42,89	PARA	R
EW3_PUMP_DISCHARGE_PRESS_RAW	LD:ANALOG	W_INT_REAL	FBI_1_77	18,88	IN	R
EW3_PUMP_ENABLED	LD:EXTRACTION_WELLS	COIL	FBI_2_460	171,56	Q	W
	LD:EXTRACTION_WELLS	NO_CONTACT	.2.463	3,60	IN	R
EW3_PUMP_FAILED_STATUS	LD:EXTRACTION_WELLS	NC_CONTACT	.2.476	11,69	IN	R
	LD:AD_ALARMS	NO_CONTACT	.6.3	11,8	IN	R
EW3_PUMP_IN_AUTO	LD:EXTRACTION_WELLS	NO_CONTACT	.2.462	3,56	IN	R
	LD:EXTRACTION_WELLS	NO_CONTACT	.2.480	51,69	IN	R
EW3_PUMP_SPEED_COMMAND	LD:ANALOG	REAL_TO_INT	.1.109	69,160	OUT	W
EW3_PUMP_SPEED_COMMAND_HMI	LD:ANALOG	SCALING	FBI_1_107	18,160	IN	R
EW3_PUMP_SPEED_COMMAND_PARA	LD:ANALOG	SCALING	FBI_1_107	18,161	PARA	R
EW3_READY	LD:SHUTDOWN	NO_CONTACT	.8.129	3,96	IN	R
	LD:EXTRACTION_WELLS	COIL	FBI_2_478	171,69	Q	W
	LD:EXTRACTION_WELLS	NO_CONTACT	.2.479	19,56	IN	R
EW3_WELL_VAULT_HIGHLEVEL_ALARM	LD:EXTRACTION_WELLS	NO_CONTACT	.2.527	27,69	IN	R
	LD:AD_ALARMS	NC_CONTACT	.6.91	11,13	IN	R
EW4_FLOW_TIMER_ACC	LD:EXTRACTION_WELLS	TON	FBI_2_312	50,208	ET	W

table continued...

Variable usage (Name: All, Type: All, DataType: All, Sorted by: name)

Variable name	Used in section	Type	Instance/Network	at	Pin	R/W
EW4_FLOW_TIMER_DN	LD:EXTRACTION_WELLS	NO_CONTACT	.2.310	59,205	IN	R
	LD:EXTRACTION_WELLS	TON	FBI_2_312	50,207	Q	W
	LD:EXTRACTION_WELLS	NC_CONTACT	.2.313	11,206	IN	R
EW4_FQ	LD:EXTRACTION_WELLS	ADD_REAL	.2.311	107,207	OUT	W
	LD:EXTRACTION_WELLS	ADD_REAL	.2.311	90,208	IN2	R
	LD:EXTRACTION_WELLS	ADD_REAL	.2.319	50,228	IN4	R
EW4_FTS	LD:EXTRACTION_WELLS	NC_CONTACT	.2.486	3,97	IN	R
	LD:EXTRACTION_WELLS	NO_CONTACT	.2.489	3,95	IN	R
	LD:EXTRACTION_WELLS	COIL	FBI_2_492	171,94	Q	W
	LD:AD_ALARMS	NO_CONTACT	.6.99	11,19	IN	R
EW4_FTS_TACC_SEC	LD:EXTRACTION_WELLS	DIV_DINT	.2.487	171,89	OUT	W
EW4_FTS_TDN	LD:EXTRACTION_WELLS	NO_CONTACT	.2.491	3,94	IN	R
	LD:EXTRACTION_WELLS	TON	FBI_2_497	98,89	Q	W
EW4_FTS_TPRE_SEC	LD:EXTRACTION_WELLS	MUL_DINT	.2.495	50,92	IN1	R
EW4_GAL_PER_SECOND	LD:EXTRACTION_WELLS	DIV_REAL	.2.309	51,202	OUT	W
	LD:EXTRACTION_WELLS	ADD_REAL	.2.311	90,207	IN1	R
EW4_ON	LD:BAGFILTER_SCALENT_VGAC	NO_CONTACT	.3.46	35,29	IN	R
	LD:EXTRACTION_WELLS	NO_CONTACT	.2.330	75,205	IN	R
	LD:EXTRACTION_WELLS	NO_CONTACT	.2.335	3,226	IN	R
	LD:EXTRACTION_WELLS	NC_CONTACT	.2.496	27,88	IN	R
	LD:EXTRACTION_WELLS	NO_CONTACT	.2.547	67,146	IN	R
EW4_PAH_144	LD:EXTRACTION_WELLS	COIL	FBI_2_573	171,106	Q	W
	LD:EXTRACTION_WELLS	NC_CONTACT	.2.576	91,97	IN	R
	LD:EXTRACTION_WELLS	NO_CONTACT	.2.595	3,107	IN	R
	LD:AD_ALARMS	NO_CONTACT	.6.28	11,26	IN	R
EW4_PAH_SP	LD:EXTRACTION_WELLS	COMP_DB	FBI_2_574	82,103	IN2	R
EW4_PUMP_DISCHARGE_FLOW	LD:EXTRACTION_WELLS	DIV_REAL	.2.309	34,202	IN1	R
	LD:EXTRACTION_WELLS	ADD_REAL	.2.534	10,150	IN4	R
	LD:ANALOG	SCALING	FBI_1_85	61,104	OUT	W
EW4_PUMP_DISCHARGE_FLOW_PARA	LD:ANALOG	SCALING	FBI_1_85	42,105	PARA	R
EW4_PUMP_DISCHARGE_FLOW_RAW	LD:ANALOG	W_INT_REAL	FBI_1_86	18,104	IN	R
EW4_PUMP_DISCHARGE_PRESSURE	LD:EXTRACTION_WELLS	COMP_DB	FBI_2_574	82,102	IN1	R
	LD:ANALOG	SCALING	FBI_1_81	61,99	OUT	W
EW4_PUMP_DISCHARGE_PRESSURE_PARA	LD:ANALOG	SCALING	FBI_1_81	42,100	PARA	R
EW4_PUMP_DISCHARGE_PRESS_RAW	LD:ANALOG	W_INT_REAL	FBI_1_82	18,99	IN	R
EW4_PUMP_ENABLED	LD:EXTRACTION_WELLS	NO_CONTACT	.2.498	3,88	IN	R
	LD:EXTRACTION_WELLS	COIL	FBI_2_501	171,84	Q	W
EW4_PUMP_FAILED_STATUS	LD:EXTRACTION_WELLS	NC_CONTACT	.2.485	11,97	IN	R
	LD:AD_ALARMS	NO_CONTACT	.6.4	11,9	IN	R
EW4_PUMP_IN_AUTO	LD:EXTRACTION_WELLS	NO_CONTACT	.2.481	51,97	IN	R
	LD:EXTRACTION_WELLS	NO_CONTACT	.2.499	3,84	IN	R
EW4_READY	LD:SHUTDOWN	NO_CONTACT	.8.130	3,97	IN	R
	LD:EXTRACTION_WELLS	NO_CONTACT	.2.482	19,84	IN	R
	LD:EXTRACTION_WELLS	COIL	FBI_2_483	171,97	Q	W
EW4_WELL_VAULT_HIGHLEVEL_ALARM	LD:EXTRACTION_WELLS	NO_CONTACT	.2.523	27,97	IN	R
	LD:AD_ALARMS	NC_CONTACT	.6.92	11,14	IN	R
EW5_FLOW_TIMER_ACC	LD:EXTRACTION_WELLS	TON	FBI_2_317	50,219	ET	W
EW5_FLOW_TIMER_DN	LD:EXTRACTION_WELLS	NO_CONTACT	.2.315	59,216	IN	R
	LD:EXTRACTION_WELLS	TON	FBI_2_317	50,218	Q	W
	LD:EXTRACTION_WELLS	NC_CONTACT	.2.318	11,217	IN	R

table continued...

Variable usage (Name: All, Type: All, DataType: All, Sorted by: name)

Variable name	Used in section	Type	Instance/Network	at	Pin	R/W
EW5_FQ	LD:EXTRACTION_WELLS	ADD_REAL	.2.316	107,218	OUT	W
	LD:EXTRACTION_WELLS	ADD_REAL	.2.316	90,219	IN2	R
	LD:EXTRACTION_WELLS	ADD_REAL	.2.319	50,229	IN5	R
EW5_FTS	LD:EXTRACTION_WELLS	COIL	FBI_2_511	171,120	Q	W
	LD:EXTRACTION_WELLS	NO_CONTACT	.2.514	3,121	IN	R
	LD:EXTRACTION_WELLS	NC_CONTACT	.2.517	3,123	IN	R
	LD:AD_ALARMS	NO_CONTACT	.6.100	11,20	IN	R
EW5_FTS_TACC_SEC	LD:EXTRACTION_WELLS	DIV_DINT	.2.516	171,115	OUT	W
EW5_FTS_TDN	LD:EXTRACTION_WELLS	TON	FBI_2_506	98,115	Q	W
	LD:EXTRACTION_WELLS	NO_CONTACT	.2.512	3,120	IN	R
EW5_FTS_TPRE_SEC	LD:EXTRACTION_WELLS	MUL_DINT	.2.508	50,118	IN1	R
EW5_GAL_PER_SECOND	LD:EXTRACTION_WELLS	DIV_REAL	.2.314	51,213	OUT	W
	LD:EXTRACTION_WELLS	ADD_REAL	.2.316	90,218	IN1	R
EW5_ON	LD:BAGFILTER_SCALENT_VGAC	NO_CONTACT	.3.47	35,30	IN	R
	LD:EXTRACTION_WELLS	NO_CONTACT	.2.331	75,216	IN	R
	LD:EXTRACTION_WELLS	NO_CONTACT	.2.336	3,227	IN	R
	LD:EXTRACTION_WELLS	NC_CONTACT	.2.507	27,114	IN	R
	LD:EXTRACTION_WELLS	NO_CONTACT	.2.548	67,147	IN	R
EW5_PAH_154	LD:EXTRACTION_WELLS	COIL	FBI_2_578	171,132	Q	W
	LD:EXTRACTION_WELLS	NC_CONTACT	.2.583	91,123	IN	R
	LD:EXTRACTION_WELLS	NO_CONTACT	.2.598	3,133	IN	R
	LD:AD_ALARMS	NO_CONTACT	.6.30	11,27	IN	R
EW5_PAH_SP	LD:EXTRACTION_WELLS	COMP_DB	FBI_2_577	82,129	IN2	R
EW5_PUMP_DISCHARGE_FLOW	LD:EXTRACTION_WELLS	DIV_REAL	.2.314	34,213	IN1	R
	LD:EXTRACTION_WELLS	ADD_REAL	.2.534	10,151	IN5	R
	LD:ANALOG	SCALING	FBI_1_92	61,121	OUT	W
EW5_PUMP_DISCHARGE_FLOW_PARA	LD:ANALOG	SCALING	FBI_1_92	42,122	PARA	R
EW5_PUMP_DISCHARGE_FLOW_RAW	LD:ANALOG	W_INT_REAL	FBI_1_91	18,121	IN	R
EW5_PUMP_DISCHARGE_PRESSURE	LD:EXTRACTION_WELLS	COMP_DB	FBI_2_577	82,128	IN1	R
	LD:ANALOG	SCALING	FBI_1_90	61,116	OUT	W
EW5_PUMP_DISCHARGE_PRESS_PARA	LD:ANALOG	SCALING	FBI_1_90	42,117	PARA	R
EW5_PUMP_DISCHARGE_PRESS_RAW	LD:ANALOG	W_INT_REAL	FBI_1_89	18,116	IN	R
EW5_PUMP_ENABLED	LD:EXTRACTION_WELLS	COIL	FBI_2_502	171,110	Q	W
	LD:EXTRACTION_WELLS	NO_CONTACT	.2.505	3,114	IN	R
EW5_PUMP_FAILED_STATUS	LD:EXTRACTION_WELLS	NC_CONTACT	.2.518	11,123	IN	R
	LD:AD_ALARMS	NO_CONTACT	.6.6	11,10	IN	R
EW5_PUMP_IN_AUTO	LD:EXTRACTION_WELLS	NO_CONTACT	.2.504	3,110	IN	R
	LD:EXTRACTION_WELLS	NO_CONTACT	.2.522	51,123	IN	R
EW5_READY	LD:SHUTDOWN	NO_CONTACT	.8.131	3,98	IN	R
	LD:EXTRACTION_WELLS	COIL	FBI_2_520	171,123	Q	W
	LD:EXTRACTION_WELLS	NO_CONTACT	.2.521	19,110	IN	R
EW5_WELL_VAULT_HIGHLEVEL_ALARM	LD:EXTRACTION_WELLS	NO_CONTACT	.2.529	27,123	IN	R
	LD:AD_ALARMS	NC_CONTACT	.6.93	11,15	IN	R
EW_READY	LD:SHUTDOWN	NC_CONTACT	.8.117	3,7	IN	R
	LD:SHUTDOWN	COIL	FBI_8_126	91,94	Q	W
EXCESSIVE_FLOW_ALARM	LD:SHUTDOWN	COIL	FBI_8_15	99,50	Q	W
	LD:SHUTDOWN	NO_CONTACT	.8.16	3,51	IN	R
	LD:SHUTDOWN	NO_CONTACT	.8.22	3,2	IN	R
	LD:DISCHARGE_WETWELL_AND_> PUMP	NC_CONTACT	.5.307	27,9	IN	R

table continued...

Variable usage (Name: All, Type: All, DataType: All, Sorted by: name)

Variable name	Used in section	Type	Instance/Network	at	Pin	R/W
	LD:AD_ALARMS	NO_CONTACT	.6.83	11,56	IN	R
EXCESSIVE_FLOW_TIMER_ACC	LD:SHUTDOWN	TON	FBI_8_18	98,48	ET	W
EXCESSIVE_FLOW_TIMER_DN	LD:SHUTDOWN	NO_CONTACT	.8.17	3,50	IN	R
	LD:SHUTDOWN	TON	FBI_8_18	98,47	Q	W
GTP_SHUTDOWN	LD:SHUTDOWN	COIL	FBI_8_3	99,1	Q	W
	LD:SHUTDOWN	NO_CONTACT	.8.69	3,20	IN	R
	LD:AIR_STRIPPER	NO_CONTACT	.4.163	3,38	IN	R
	LD:EXTRACTION_WELLS	NC_CONTACT	.2.345	35,1	IN	R
	LD:EXTRACTION_WELLS	NC_CONTACT	.2.458	35,28	IN	R
	LD:EXTRACTION_WELLS	NC_CONTACT	.2.461	35,56	IN	R
	LD:EXTRACTION_WELLS	NC_CONTACT	.2.500	35,84	IN	R
	LD:EXTRACTION_WELLS	NC_CONTACT	.2.503	35,110	IN	R
GTP_SHUTDOWN_PB	LD:SYS_OH	RESET_COIL	FBI_7_21	99,22	Q	W
	LD:SYS_OH	NO_CONTACT	.7.23	3,23	IN	R
	LD:SHUTDOWN	NO_CONTACT	.8.72	3,19	IN	R
GTP_START_PB	LD:SYS_OH	NO_CONTACT	.7.15	3,20	IN	R
	LD:SYS_OH	RESET_COIL	FBI_7_17	99,19	Q	W
	LD:SHUTDOWN	NC_CONTACT	.8.73	35,20	IN	R
HMI_BF1_DIFF_PRESS_ALARM	LD:BAGFILTER_SCALENT_VGAC	NO_CONTACT	.3.112	11,19	IN	R
	LD:BAGFILTER_SCALENT_VGAC	COIL	FBI_3_116	75,18	Q	W
	LD:AD_ALARMS	NO_CONTACT	.6.47	11,29	IN	R
HMI_BF2_DIFF_PRESS_ALARM	LD:BAGFILTER_SCALENT_VGAC	NO_CONTACT	.3.113	11,23	IN	R
	LD:BAGFILTER_SCALENT_VGAC	COIL	FBI_3_117	75,22	Q	W
	LD:AD_ALARMS	NO_CONTACT	.6.46	11,30	IN	R
INF_FLOW_SUM	LD:EXTRACTION_WELLS	DIV_REAL	.2.532	42,147	IN1	R
	LD:EXTRACTION_WELLS	ADD_REAL	.2.534	27,147	OUT	W
INF_FQ	LD:EXTRACTION_WELLS	MOVE	.2.531	98,161	OUT	W
INF_FQ_LEQ_TH	LD:EXTRACTION_WELLS	TOTALIZER	FBI_2_533	117,147	OUT	W
INF_TOT_INFO.outc	LD:EXTRACTION_WELLS	MOVE	.2.531	82,161	IN	R
	LD:EXTRACTION_WELLS	TOTALIZER	FBI_2_533	117,148	INFO	W
INF_TOT_MODE	LD:EXTRACTION_WELLS	TOTALIZER	FBI_2_533	98,148	MODE	R
INF_TOT_PARA	LD:EXTRACTION_WELLS	TOTALIZER	FBI_2_533	98,149	PARA	R
INF_TOT_STAT	LD:EXTRACTION_WELLS	TOTALIZER	FBI_2_533	117,149	STATUS	W
INF_TOT_TRI	LD:EXTRACTION_WELLS	TOTALIZER	FBI_2_533	98,150	TR_I	R
INF_TOT_TRS	LD:SYS_OH	RESET_COIL	FBI_7_32	99,28	Q	W
	LD:SYS_OH	NO_CONTACT	.7.34	3,29	IN	R
	LD:EXTRACTION_WELLS	NO_CONTACT	.2.530	3,152	IN	R
NEW_DAY_HOLDER	LD:SYS_OH	COIL	FBI_7_2	99,3	Q	W
	LD:SYS_OH	NO_CONTACT	.7.4	3,2	IN	R
NEW_DAY_PULSE	LD:SYS_OH	COIL	FBI_7_9	99,7	Q	W
	LD:SYS_OH	NC_CONTACT	.7.30	19,7	IN	R
	FBD:DAILY_FLOW_TOTAL_STOR>AGE_01	AND_BOOL	.15.3	5,6	IN1	R
	FBD:DAILY_FLOW_TOTAL_STOR>AGE_01	AND_BOOL	.15.6	5,21	IN1	R
	FBD:DAILY_FLOW_TOTAL_STOR>AGE_01	AND_BOOL	.15.9	5,36	IN1	R
	FBD:DAILY_FLOW_TOTAL_STOR>AGE_01	AND_BOOL	.15.12	5,51	IN1	R
	FBD:DAILY_FLOW_TOTAL_STOR>	AND_BOOL	.15.15	5,66	IN1	R

table continued...

Variable usage (Name: All, Type: All, DataType: All, Sorted by: name)

Variable name	Used in section	Type	Instance/Network	at	Pin	R/W
	AGE_01 FBD:DAILY_FLOW_TOTAL_STOR>	AND_BOOL	.15.18	5,81	IN1	R
	AGE_01 FBD:DAILY_FLOW_TOTAL_STOR>	AND_BOOL	.15.21	80,6	IN1	R
	AGE_01 FBD:DAILY_FLOW_TOTAL_STOR>	AND_BOOL	.15.24	80,21	IN1	R
	AGE_01 FBD:DAILY_FLOW_TOTAL_STOR>	AND_BOOL	.15.27	80,36	IN1	R
	AGE_01 FBD:DAILY_FLOW_TOTAL_STOR>	AND_BOOL	.15.30	80,51	IN1	R
	AGE_01 FBD:DAILY_FLOW_TOTAL_STOR>	AND_BOOL	.15.33	80,66	IN1	R
	AGE_01 FBD:DAILY_FLOW_TOTAL_STOR>	AND_BOOL	.15.36	80,81	IN1	R
	AGE_01 FBD:DAILY_FLOW_TOTAL_STOR>	AND_BOOL	.15.39	155,6	IN1	R
	AGE_01 FBD:DAILY_FLOW_TOTAL_STOR>	AND_BOOL	.15.42	155,21	IN1	R
	AGE_01 FBD:DAILY_FLOW_TOTAL_STOR>	AND_BOOL	.15.45	155,36	IN1	R
	AGE_01 FBD:DAILY_FLOW_TOTAL_STOR>	AND_BOOL	.15.48	155,51	IN1	R
	AGE_01 FBD:DAILY_FLOW_TOTAL_STOR>	AND_BOOL	.15.51	155,66	IN1	R
	AGE_01 FBD:DAILY_FLOW_TOTAL_STOR>	AND_BOOL	.15.54	155,81	IN1	R
	AGE_01 FBD:DAILY_FLOW_TOTAL_STOR>	AND_BOOL	.15.57	230,6	IN1	R
	AGE_01 FBD:DAILY_FLOW_TOTAL_STOR>	AND_BOOL	.15.60	230,21	IN1	R
	AGE_01 FBD:DAILY_FLOW_TOTAL_STOR>	AND_BOOL	.15.63	230,36	IN1	R
	AGE_01 FBD:DAILY_FLOW_TOTAL_STOR>	AND_BOOL	.15.66	230,51	IN1	R
	AGE_01 FBD:DAILY_FLOW_TOTAL_STOR>	AND_BOOL	.15.69	230,66	IN1	R
	AGE_01 FBD:DAILY_FLOW_TOTAL_STOR>	AND_BOOL	.15.72	230,81	IN1	R
	AGE_01 FBD:DAILY_FLOW_TOTAL_STOR>	AND_BOOL	.15.75	5,106	IN1	R
	AGE_01 FBD:DAILY_FLOW_TOTAL_STOR>	AND_BOOL	.15.78	5,121	IN1	R
	AGE_01 FBD:DAILY_FLOW_TOTAL_STOR>	AND_BOOL	.15.81	5,136	IN1	R
	AGE_01 FBD:DAILY_FLOW_TOTAL_STOR>	AND_BOOL	.15.84	5,151	IN1	R
	AGE_01 FBD:DAILY_FLOW_TOTAL_STOR>	AND_BOOL	.15.87	5,166	IN1	R
	AGE_01 FBD:DAILY_FLOW_TOTAL_STOR>	AND_BOOL	.15.90	5,181	IN1	R

table continued...

Variable usage (Name: All, Type: All, DataType: All, Sorted by: name)

Variable name	Used in section	Type	Instance/Network	at	Pin	R/W
	AGE_01 FBD:DAILY_FLOW_TOTAL_STOR>	AND_BOOL	.15.93	80,106	IN1	R
	AGE_01 FBD:DAILY_FLOW_TOTAL_STOR>	AND_BOOL	.15.96	80,121	IN1	R
	AGE_01 FBD:DAILY_FLOW_TOTAL_STOR>	AND_BOOL	.15.99	80,136	IN1	R
	AGE_01 FBD:DAILY_FLOW_TOTAL_STOR>	AND_BOOL	.15.102	80,151	IN1	R
	AGE_01 FBD:DAILY_FLOW_TOTAL_STOR>	AND_BOOL	.15.105	80,166	IN1	R
	AGE_01 FBD:DAILY_FLOW_TOTAL_STOR>	AND_BOOL	.15.108	80,181	IN1	R
	AGE_01 FBD:DAILY_FLOW_TOTAL_STOR>	AND_BOOL	.15.111	155,106	IN1	R
	AGE_01 FBD:DAILY_FLOW_TOTAL_STOR>	AND_BOOL	.15.114	155,121	IN1	R
	AGE_01 FBD:DAILY_FLOW_TOTAL_STOR>	AND_BOOL	.15.117	155,136	IN1	R
	AGE_01 FBD:DAILY_FLOW_TOTAL_STOR>	AND_BOOL	.15.120	155,151	IN1	R
	AGE_01 FBD:DAILY_FLOW_TOTAL_STOR>	AND_BOOL	.15.123	155,166	IN1	R
	AGE_01 FBD:DAILY_FLOW_TOTAL_STOR>	AND_BOOL	.15.126	155,181	IN1	R
	AGE_01 FBD:DAILY_FLOW_TOTAL_STOR>	AND_BOOL	.15.129	230,106	IN1	R
	AGE_01 FBD:DAILY_FLOW_TOTAL_STOR>	AND_BOOL	.15.132	230,121	IN1	R
	AGE_01 FBD:DAILY_FLOW_TOTAL_STOR>	AND_BOOL	.15.135	230,136	IN1	R
	AGE_01 FBD:DAILY_FLOW_TOTAL_STOR>	AND_BOOL	.15.138	230,151	IN1	R
	AGE_01 FBD:DAILY_FLOW_TOTAL_STOR>	AND_BOOL	.15.141	230,166	IN1	R
	AGE_01 FBD:DAILY_FLOW_TOTAL_STOR>	AND_BOOL	.15.144	230,181	IN1	R
	AGE_01 FBD:DAILY_FLOW_TOTAL_STOR>	AND_BOOL	.15.147	5,206	IN1	R
	AGE_01 FBD:DAILY_FLOW_TOTAL_STOR>	AND_BOOL	.15.150	5,221	IN1	R
	AGE_01 FBD:DAILY_FLOW_TOTAL_STOR>	AND_BOOL	.15.153	80,206	IN1	R
	AGE_01 FBD:DAILY_FLOW_TOTAL_STOR>	AND_BOOL	.15.156	80,221	IN1	R
	AGE_01 FBD:DAILY_FLOW_TOTAL_STOR>	AND_BOOL	.15.159	155,206	IN1	R
	AGE_01 FBD:DAILY_FLOW_TOTAL_STOR>	AND_BOOL	.15.162	155,221	IN1	R
	AGE_01 FBD:DAILY_FLOW_TOTAL_STOR>	AND_BOOL	.15.165	230,206	IN1	

table continued...

Variable usage (Name: All, Type: All, DataType: All, Sorted by: name)

Variable name	Used in section	Type	Instance/Network	at	Pin	R/W
	AGE_01 FBD:DAILY_FLOW_TOTAL_STOR>	AND_BOOL	.15.168	230,221	IN1	R
	AGE_01 FBD:DAILY_FLOW_TOTAL_STOR>	AND_BOOL	.16.3	5,6	IN1	R
	AGE_02 FBD:DAILY_FLOW_TOTAL_STOR>	AND_BOOL	.16.6	5,21	IN1	R
	AGE_02 FBD:DAILY_FLOW_TOTAL_STOR>	AND_BOOL	.16.9	5,36	IN1	R
	AGE_02 FBD:DAILY_FLOW_TOTAL_STOR>	AND_BOOL	.16.12	5,51	IN1	R
	AGE_02 FBD:DAILY_FLOW_TOTAL_STOR>	AND_BOOL	.16.15	5,66	IN1	R
	AGE_02 FBD:DAILY_FLOW_TOTAL_STOR>	AND_BOOL	.16.18	5,81	IN1	R
	AGE_02 FBD:DAILY_FLOW_TOTAL_STOR>	AND_BOOL	.16.21	80,6	IN1	R
	AGE_02 FBD:DAILY_FLOW_TOTAL_STOR>	AND_BOOL	.16.24	80,21	IN1	R
	AGE_02 FBD:DAILY_FLOW_TOTAL_STOR>	AND_BOOL	.16.27	80,36	IN1	R
	AGE_02 FBD:DAILY_FLOW_TOTAL_STOR>	AND_BOOL	.16.30	80,51	IN1	R
	AGE_02 FBD:DAILY_FLOW_TOTAL_STOR>	AND_BOOL	.16.33	80,66	IN1	R
	AGE_02 FBD:DAILY_FLOW_TOTAL_STOR>	AND_BOOL	.16.36	80,81	IN1	R
	AGE_02 FBD:DAILY_FLOW_TOTAL_STOR>	AND_BOOL	.16.39	155,6	IN1	R
	AGE_02 FBD:DAILY_FLOW_TOTAL_STOR>	AND_BOOL	.16.42	155,21	IN1	R
	AGE_02 FBD:DAILY_FLOW_TOTAL_STOR>	AND_BOOL	.16.45	155,36	IN1	R
	AGE_02 FBD:DAILY_FLOW_TOTAL_STOR>	AND_BOOL	.16.48	155,51	IN1	R
	AGE_02 FBD:DAILY_FLOW_TOTAL_STOR>	AND_BOOL	.16.51	155,66	IN1	R
	AGE_02 FBD:DAILY_FLOW_TOTAL_STOR>	AND_BOOL	.16.54	155,81	IN1	R
	AGE_02 FBD:DAILY_FLOW_TOTAL_STOR>	AND_BOOL	.16.57	230,6	IN1	R
	AGE_02 FBD:DAILY_FLOW_TOTAL_STOR>	AND_BOOL	.16.60	230,21	IN1	R
	AGE_02 FBD:DAILY_FLOW_TOTAL_STOR>	AND_BOOL	.16.63	230,36	IN1	R
	AGE_02 FBD:DAILY_FLOW_TOTAL_STOR>	AND_BOOL	.16.66	230,51	IN1	R
	AGE_02 FBD:DAILY_FLOW_TOTAL_STOR>	AND_BOOL	.16.69	230,66	IN1	R
	AGE_02 FBD:DAILY_FLOW_TOTAL_STOR>	AND_BOOL	.16.72	230,81	IN1	R

table continued...

Variable usage (Name: All, Type: All, DataType: All, Sorted by: name)

Variable name	Used in section	Type	Instance/Network	at	Pin	R/W
	AGE_02 FBD:DAILY_FLOW_TOTAL_STOR>	AND_BOOL	.16.75	5,106	IN1	R
	AGE_02 FBD:DAILY_FLOW_TOTAL_STOR>	AND_BOOL	.16.78	5,121	IN1	R
	AGE_02 FBD:DAILY_FLOW_TOTAL_STOR>	AND_BOOL	.16.81	5,136	IN1	R
	AGE_02 FBD:DAILY_FLOW_TOTAL_STOR>	AND_BOOL	.16.84	5,151	IN1	R
	AGE_02 FBD:DAILY_FLOW_TOTAL_STOR>	AND_BOOL	.16.87	5,166	IN1	R
	AGE_02 FBD:DAILY_FLOW_TOTAL_STOR>	AND_BOOL	.16.90	5,181	IN1	R
	AGE_02 FBD:DAILY_FLOW_TOTAL_STOR>	AND_BOOL	.16.93	80,106	IN1	R
	AGE_02 FBD:DAILY_FLOW_TOTAL_STOR>	AND_BOOL	.16.96	80,121	IN1	R
	AGE_02 FBD:DAILY_FLOW_TOTAL_STOR>	AND_BOOL	.16.99	80,136	IN1	R
	AGE_02 FBD:DAILY_FLOW_TOTAL_STOR>	AND_BOOL	.16.102	80,151	IN1	R
	AGE_02 FBD:DAILY_FLOW_TOTAL_STOR>	AND_BOOL	.16.105	80,166	IN1	R
	AGE_02 FBD:DAILY_FLOW_TOTAL_STOR>	AND_BOOL	.16.108	80,181	IN1	R
	AGE_02 FBD:DAILY_FLOW_TOTAL_STOR>	AND_BOOL	.16.111	155,106	IN1	R
	AGE_02 FBD:DAILY_FLOW_TOTAL_STOR>	AND_BOOL	.16.114	155,121	IN1	R
	AGE_02 FBD:DAILY_FLOW_TOTAL_STOR>	AND_BOOL	.16.117	155,136	IN1	R
	AGE_02 FBD:DAILY_FLOW_TOTAL_STOR>	AND_BOOL	.16.120	155,151	IN1	R
	AGE_02 FBD:DAILY_FLOW_TOTAL_STOR>	AND_BOOL	.16.123	155,166	IN1	R
	AGE_02 FBD:DAILY_FLOW_TOTAL_STOR>	AND_BOOL	.16.126	155,181	IN1	R
	AGE_02 FBD:DAILY_FLOW_TOTAL_STOR>	AND_BOOL	.16.129	230,106	IN1	R
	AGE_02 FBD:DAILY_FLOW_TOTAL_STOR>	AND_BOOL	.16.132	230,121	IN1	R
	AGE_02 FBD:DAILY_FLOW_TOTAL_STOR>	AND_BOOL	.16.135	230,136	IN1	R
	AGE_02 FBD:DAILY_FLOW_TOTAL_STOR>	AND_BOOL	.16.138	230,151	IN1	R
	AGE_02 FBD:DAILY_FLOW_TOTAL_STOR>	AND_BOOL	.16.141	230,166	IN1	R
	AGE_02 FBD:DAILY_FLOW_TOTAL_STOR>	AND_BOOL	.16.144	230,181	IN1	R
	AGE_02 FBD:DAILY_FLOW_TOTAL_STOR>	AND_BOOL	.16.147	5,206	IN1	

table continued...

Variable usage (Name: All, Type: All, DataType: All, Sorted by: name)

Variable name	Used in section	Type	Instance/Network	at	Pin	R/W
	AGE_02					
	FBD:DAILY_FLOW_TOTAL_STOR> AGE_02	AND_BOOL	.16.150	5,221	IN1	R
	FBD:DAILY_FLOW_TOTAL_STOR> AGE_02	AND_BOOL	.16.153	80,206	IN1	R
	FBD:DAILY_FLOW_TOTAL_STOR> AGE_02	AND_BOOL	.16.156	80,221	IN1	R
	FBD:DAILY_FLOW_TOTAL_STOR> AGE_02	AND_BOOL	.16.159	155,206	IN1	R
	FBD:DAILY_FLOW_TOTAL_STOR> AGE_02	AND_BOOL	.16.162	155,221	IN1	R
	FBD:DAILY_FLOW_TOTAL_STOR> AGE_02	AND_BOOL	.16.165	230,206	IN1	R
	FBD:DAILY_FLOW_TOTAL_STOR> AGE_02	AND_BOOL	.16.168	230,221	IN1	R
	FBD:DAILY_FLOW_TOTAL_STOR> AGE_03	AND_BOOL	.17.3	5,6	IN1	R
	FBD:DAILY_FLOW_TOTAL_STOR> AGE_03	AND_BOOL	.17.6	5,21	IN1	R
	FBD:DAILY_FLOW_TOTAL_STOR> AGE_03	AND_BOOL	.17.9	5,36	IN1	R
	FBD:DAILY_FLOW_TOTAL_STOR> AGE_03	AND_BOOL	.17.12	5,51	IN1	R
	FBD:DAILY_FLOW_TOTAL_STOR> AGE_03	AND_BOOL	.17.15	5,66	IN1	R
	FBD:DAILY_FLOW_TOTAL_STOR> AGE_03	AND_BOOL	.17.18	5,81	IN1	R
	FBD:DAILY_FLOW_TOTAL_STOR> AGE_03	AND_BOOL	.17.21	80,6	IN1	R
	FBD:DAILY_FLOW_TOTAL_STOR> AGE_03	AND_BOOL	.17.24	80,21	IN1	R
	FBD:DAILY_FLOW_TOTAL_STOR> AGE_03	AND_BOOL	.17.27	80,36	IN1	R
	FBD:DAILY_FLOW_TOTAL_STOR> AGE_03	AND_BOOL	.17.30	80,51	IN1	R
	FBD:DAILY_FLOW_TOTAL_STOR> AGE_03	AND_BOOL	.17.33	80,66	IN1	R
	FBD:DAILY_FLOW_TOTAL_STOR> AGE_03	AND_BOOL	.17.36	80,81	IN1	R
	FBD:DAILY_FLOW_TOTAL_STOR> AGE_03	REAL_TO_DINT	.17.37	79,94	EN	R
	LD:SHUTDOWN	NC_CONTACT	.8.4	19,39	IN	R
	LD:SHUTDOWN	NO_CONTACT	.8.11	3,32	IN	R
	LD:SHUTDOWN	NO_CONTACT	.8.154	3,22	IN	R
NEW_DAY_PULSE_HMI	LD:SYS_OH	NO_CONTACT	.7.1	3,3	IN	R
	LD:SYS_OH	RESET_COIL	FBI_7_5	99,2	Q	W
	LD:SYS_OH	NC_CONTACT	.7.7	3,7	IN	R
	LD:SYS_OH	NO_CONTACT	.7.12	3,15	IN	R
ONE_DAY_TACC	LD:SYS_OH	TON	FBI_7_6	66,9	ET	W
TREATMENT_DISCHARGE_FLOW	LD:SHUTDOWN	DIV_REAL	.8.10	34,29	IN1	R

table continued...

Variable usage (Name: All, Type: All, DataType: All, Sorted by: name)

Variable name	Used in section	Type	Instance/Network	at	Pin	R/W
	LD:SHUTDOWN	GE_REAL	.8.19	10,47	IN1	R
	LD:DISCHARGE_WETWELL_AND_PUMP	DIV_REAL	.5.343	34,48	IN1	R
	LD:ANALOG	SCALING	FBI_1_54	61,27	OUT	W
TREATMENT_DISCHARGE_FLOW_PARA	LD:ANALOG	SCALING	FBI_1_54	42,28	PARA	R
TREATMENT_DISCHARGE_FLOW_RAW	LD:DISCHARGE_WETWELL_AND_PUMP	W_INT_REAL	FBI_5_357	18,63	IN	R
	LD:ANALOG	W_INT_REAL	FBI_1_53	18,27	IN	R
TREATMENT_DISCHARGE_TOTAL	LD:DISCHARGE_WETWELL_AND_PUMP	MOVE	.5.344	98,56	OUT	W
UPS_FAIL	LD:SHUTDOWN	NC_CONTACT	.8.140	3,13	IN	R
VGAC_DIFFERENTIAL_PRESSURE	LD:BAGFILTER_SCALENT_VGAC	COMP_DB	FBI_3_59	10,37	IN1	R
	LD:ANALOG	SCALING	FBI_1_68	61,46	OUT	W
VGAC_DIFFERENTIAL_PRESSURE_PARA	LD:ANALOG	SCALING	FBI_1_68	42,47	PARA	R
VGAC_DIFFERENTIAL_PRESSURE_RAW	LD:ANALOG	W_INT_REAL	FBI_1_67	18,46	IN	R
VGAC_DIFFERENTIAL_TIMER_ACC	LD:BAGFILTER_SCALENT_VGAC	TON	FBI_3_64	74,46	ET	W
VGAC_DIFFERENTIAL_TIMER_DN	LD:BAGFILTER_SCALENT_VGAC	TON	FBI_3_64	82,45	Q	W
	LD:BAGFILTER_SCALENT_VGAC	NO_CONTACT	.3.72	11,53	IN	R
VGAC_DISCHARGE_TEMPERATURE	LD:BAGFILTER_SCALENT_VGAC	COMP_DB	FBI_3_58	58,37	IN1	R
	LD:ANALOG	SCALING	FBI_1_65	61,52	OUT	W
VGAC_DISCHARGE_TEMPERATURE_PARA	LD:ANALOG	SCALING	FBI_1_65	42,53	PARA	R
VGAC_DISCHARGE_TEMPERATURE_RAW	LD:ANALOG	W_INT_REAL	FBI_1_66	18,52	IN	R
VGAC_DISCHARGE_TEMP_TIMER_ACC	LD:BAGFILTER_SCALENT_VGAC	TON	FBI_3_63	74,51	ET	W
VGAC_DISCHARGE_TEMP_TIMER_DN	LD:BAGFILTER_SCALENT_VGAC	TON	FBI_3_63	82,50	Q	W
	LD:BAGFILTER_SCALENT_VGAC	NO_CONTACT	.3.119	11,57	IN	R
VGAC_HIGH_DIFF_PRESS_ALARM	LD:SHUTDOWN	NO_CONTACT	.8.149	3,15	IN	R
	LD:BAGFILTER_SCALENT_VGAC	COIL	FBI_3_98	75,53	Q	W
	LD:BAGFILTER_SCALENT_VGAC	NO_CONTACT	.3.100	11,54	IN	R
	LD:AD_ALARMS	NO_CONTACT	.6.68	11,42	IN	R
VGAC_HIGH_DISC_TEMP_ALARM	LD:SHUTDOWN	NO_CONTACT	.8.150	3,16	IN	R
	LD:BAGFILTER_SCALENT_VGAC	NO_CONTACT	.3.120	11,58	IN	R
	LD:BAGFILTER_SCALENT_VGAC	COIL	FBI_3_108	75,57	Q	W
	LD:AD_ALARMS	NO_CONTACT	.6.73	11,46	IN	R
VGAC_PDAH_SP	LD:BAGFILTER_SCALENT_VGAC	COMP_DB	FBI_3_59	10,38	IN2	R
VGAC_TAH_SP	LD:BAGFILTER_SCALENT_VGAC	COMP_DB	FBI_3_58	58,38	IN2	R

State RAM usage overview

	0	1	2	3	4	5	6	7	8	9
0x		IO,IEC[rw]	IO,IEC[rw]	IO,IEC[rw]	IO,IEC[rw]	IO,IEC[rw]	IO,IEC[w]	IO,IEC[rw]	IO,IEC[rw]	IO,IEC[w]
000010	IO	IO	IO	IO	IO	IO	IO	IO,IEC[w]	IO,IEC[w]	IO
000020	IO,IEC[w]	IO,IEC[w]	IO,IEC[w]	IO,IEC[w]	IO,IEC[w]	IO,IEC[w]	IO,IEC[w]	IO,IEC[w]	IO,IEC[w]	IO,IEC[w]
000030	IO,IEC[w]	IO,IEC[w]	IO,IEC[w]	-	-	-	-	-	-	-
000040	-	-	-	-	-	-	-	-	-	-
000050	-	-	-	-	-	-	-	-	-	-
000060	-	-	-	-	-	-	-	-	-	-
000070	-	-	-	-	-	-	-	-	-	-
000080	-	-	-	-	-	-	-	-	-	-
000090	-	-	-	-	-	-	-	-	-	-
000100	-	-	-	-	-	-	-	-	-	-
000110	-	-	-	-	-	-	-	-	-	-
000120	-	-	-	-	-	-	-	-	-	-
000130	-	-	-	-	-	-	-	-	-	-
000140	-	-	-	-	-	-	-	-	-	-
000150	-	-	-	-	-	-	-	-	-	-
000160	-	-	-	-	-	-	-	-	-	-
000170	-	-	-	-	-	-	-	-	-	-
000180	-	-	-	-	-	-	-	-	-	-
000190	-	-	-	-	-	-	-	-	-	-
000200	-	IEC[rw]	-	-	-	-	-	-	-	-
000210	-	-	-	-	-	-	-	-	-	-
000220	-	-	-	-	-	-	-	-	-	-
000230	-	-	-	-	-	-	-	-	-	-
000240	-	-	-	-	-	-	-	-	-	-
000250	-	-	-	-	-	-	-	-	-	-
000260	-	-	-	-	-	-	-	-	-	-
000270	-	-	-	-	-	-	-	-	-	-
000280	-	-	-	-	-	-	-	-	-	-
000290	-	-	-	-	-	-	-	-	-	-
000300	-	IEC[rw]	IEC[rw]	IEC[rw]	IEC[rw]	IEC[rw]	-	-	-	-
000310	-	-	-	-	-	-	-	-	-	-
000320	-	-	-	-	-	-	-	-	-	-
000330	-	-	-	-	-	-	-	-	-	-
000340	-	-	-	-	-	-	-	-	-	-
000350	-	-	-	-	-	-	-	-	-	-
000360	-	-	-	-	-	-	-	-	-	-
000370	-	-	-	-	-	-	-	-	-	-
000380	-	-	-	-	-	-	-	-	-	-
000390	-	-	-	-	-	-	-	-	-	-
000400	-	-	-	-	-	-	-	-	-	-
000410	-	-	-	-	-	-	-	-	-	-
000420	-	-	-	-	-	-	-	-	-	-
000430	-	-	-	-	-	-	-	-	-	-
000440	-	-	-	-	-	-	-	-	-	-
000450	-	-	-	-	-	-	-	-	-	-
000460	-	-	-	-	-	-	-	-	-	-
000470	-	-	-	-	-	-	-	-	-	-
000480	-	-	-	-	-	-	-	-	-	-
000490	-	-	-	-	-	-	-	-	-	-
000500	-	IEC[rw]	IEC[rw]	IEC[rw]	IEC[rw]	IEC[rw]	IEC[rw]	-	-	-

table continued...

State RAM usage overview

	0	1	2	3	4	5	6	7	8	9
000510	-	-	-	-	-	-	-	-	-	-
000520	-	-	-	-	-	-	-	-	-	-
000530	-	-	-	-	-	-	-	-	-	-
000540	-	-	-	-	-	-	-	-	-	-
000550	-	-	-	-	-	-	-	-	-	-
000560	-	-	-	-	-	-	-	-	-	-
000570	-	-	-	-	-	-	-	-	-	-
000580	-	-	-	-	-	-	-	-	-	-
000590	-	-	-	-	-	-	-	-	-	-
000600	-	IEC[r]	-	-	-	-	VAR	VAR	IEC[rw]	IEC[rw]
000610	IEC[rw]	IEC[rw]	IEC[r]	VAR	IEC[rw]	IEC[rw]	IEC[r]	VAR	IEC[rw]	IEC[rw]
000620	IEC[rw]	IEC[rw]	IEC[rw]	IEC[rw]	IEC[rw]	IEC[rw]	IEC[rw]	VAR	IEC[r]	IEC[rw]
000630	IEC[rw]	IEC[r]	VAR	IEC[rw]	-	IEC[rw]	IEC[rw]	IEC[rw]	IEC[rw]	IEC[rw]
000640	IEC[rw]	IEC[rw]	IEC[rw]	IEC[rw]	IEC[rw]	VAR	IEC[rw]	VAR	IEC[rw]	IEC[rw]
000650	IEC[rw]	IEC[rw]	IEC[rw]	IEC[rw]	IEC[rw]	IEC[rw]	IEC[rw]	IEC[rw]	IEC[rw]	IEC[r]
000660	IEC[rw]	IEC[rw]	VAR	IEC[rw]	IEC[rw]	IEC[rw]	IEC[rw]	IEC[rw]	IEC[rw]	IEC[rw]
000670	IEC[rw]	IEC[rw]	IEC[rw]	IEC[rw]	IEC[rw]	IEC[rw]	IEC[rw]	VAR	IEC[rw]	IEC[rw]
000680	IEC[rw]	IEC[rw]	IEC[rw]	IEC[rw]	IEC[rw]	IEC[rw]	IEC[rw]	IEC[rw]	IEC[rw]	IEC[rw]
000690	VAR	IEC[rw]	IEC[rw]	IEC[rw]	IEC[rw]	IEC[rw]	IEC[rw]	VAR	VAR	IEC[rw]
000700	IEC[r]	IEC[rw]	IEC[w]	IEC[rw]	-	-	-	-	-	-
000710	-	-	-	-	-	-	-	-	-	-
000720	-	-	-	-	-	-	-	-	-	-
000730	-	-	-	-	-	-	-	-	-	-
000740	-	-	-	-	-	-	-	-	-	-
000750	-	-	-	-	-	-	-	-	-	-
000760	-	-	-	-	-	-	-	-	-	-
000770	-	-	-	-	-	-	-	-	-	-
000780	-	-	-	-	-	-	-	-	-	-
000790	-	-	-	-	-	-	-	-	-	-
000800	-	-	-	-	-	-	-	-	-	-
000810	-	-	-	-	-	-	-	-	-	-
000820	-	-	-	-	-	-	-	-	-	-
000830	-	-	-	-	-	-	-	-	-	-
000840	-	-	-	-	-	-	-	-	-	-
000850	-	-	-	-	-	-	-	-	-	-
000860	-	-	-	-	-	-	-	-	-	-
000870	-	-	-	-	-	-	-	-	-	-
000880	-	-	-	-	-	-	-	-	-	-
000890	-	-	-	-	-	-	-	-	-	-
000900	-	-	-	-	-	-	-	-	-	-
000910	-	-	-	-	-	-	-	-	-	-
000920	-	-	-	-	-	-	-	-	-	-
000930	-	-	-	-	-	-	-	-	-	-
000940	-	-	-	-	-	-	-	-	-	-
000950	-	-	-	-	-	-	-	-	-	-
000960	-	-	-	-	-	-	-	-	-	-
000970	-	-	-	-	-	-	-	-	-	-
000980	-	-	-	-	-	-	-	-	-	-
000990	-	-	-	-	-	-	-	-	-	-
001000	IEC[rw]	IEC[rw]	-	IEC[rw]	-	-	-	-	-	-

table continued...

State RAM usage overview

	0	1	2	3	4	5	6	7	8	9
001010	-	-	-	-	-	-	-	-	-	-
001020	-	-	-	-	-	-	-	-	-	-
001030	-	-	-	-	-	-	-	-	-	-
001040	-	-	-	-	-	-	-	-	-	-
001050	-	-	-	-	-	-	-	-	-	-
001060	-	-	-	-	-	-	-	-	-	-
001070	-	-	-	-	-	-	-	-	-	-
001080	-	-	-	-	-	-	-	-	-	-
001090	-	-	-	-	-	-	-	-	-	-
001100	-	-	-	-	-	-	-	-	-	-
001110	-	-	-	-	-	-	-	-	-	-
001120	-	-	-	-	-	-	-	-	-	-
001130	-	-	-	-	-	-	-	-	-	-
001140	-	-	-	-	-	-	-	-	-	-
001150	-	-	-	-	-	-	-	-	-	-
001160	-	-	-	-	-	-	-	-	-	-
001170	-	-	-	-	-	-	-	-	-	-
001180	-	-	-	-	-	-	-	-	-	-
001190	-	-	-	-	-	-	-	-	-	-
001200	-	-	-	-	-	-	-	-	-	-
001210	-	-	-	-	-	-	-	-	-	-
001220	-	-	-	-	-	-	-	-	-	-
001230	-	-	-	-	-	-	-	-	-	-
001240	-	-	-	-	-	-	-	-	-	-
001250	-	-	-	-	-	-	-	-	-	-
001260	-	-	-	-	-	-	-	-	-	-
001270	-	-	-	-	-	-	-	-	-	-
001280	-	-	-	-	-	-	-	-	-	-
001290	-	-	-	-	-	-	-	-	-	-
001300	-	-	-	-	-	-	-	-	-	-
001310	-	-	-	-	-	-	-	-	-	-
001320	-	-	-	-	-	-	-	-	-	-
001330	-	-	-	-	-	-	-	-	-	-
001340	-	-	-	-	-	-	-	-	-	-
001350	-	-	-	-	-	-	-	-	-	-
001360	-	-	-	-	-	-	-	-	-	-
001370	-	-	-	-	-	-	-	-	-	-
001380	-	-	-	-	-	-	-	-	-	-
001390	-	-	-	-	-	-	-	-	-	-
001400	-	-	-	-	-	-	-	-	-	-
001410	-	-	-	-	-	-	-	-	-	-
001420	-	-	-	-	-	-	-	-	-	-
001430	-	-	-	-	-	-	-	-	-	-
001440	-	-	-	-	-	-	-	-	-	-
001450	-	-	-	-	-	-	-	-	-	-
001460	-	-	-	-	-	-	-	-	-	-
001470	-	-	-	-	-	-	-	-	-	-
001480	-	-	-	-	-	-	-	-	-	-
001490	-	-	-	-	-	-	-	-	-	-
001500	-	IEC[rw]	IEC[rw]	IEC[rw]	IEC[rw]	IEC[rw]	-	-	-	-

table continued...

State RAM usage overview

	0	1	2	3	4	5	6	7	8	9
001510	-	-	-	-	-	-	-	-	-	-
001520	-	-	-	-	-	-	-	-	-	-
001530	-	-	-	-	-	-	-			
1x		IO,IEC[r]	IO,IEC[r]	IO,IEC[r]	IO,IEC[r]	IO,IEC[r]	IO,IEC[r]	IO,IEC[r]	IO,IEC[r]	IO,IEC[r]
100010	IO,IEC[r]	IO,IEC[r]	IO,IEC[r]	IO,IEC[r]	IO,IEC[r]	IO,IEC[r]	IO,IEC[r]	IO	IO	IO,IEC[r]
100020	IO,IEC[r]	IO,IEC[r]	IO,IEC[r]	IO,IEC[r]	IO,IEC[r]	IO,IEC[r]	IO	IO	IO	IO,IEC[r]
100030	IO,IEC[r]	IO,IEC[r]	IO,IEC[r]	IO	IO	IO	IO	IO,IEC[r]	IO	IO
100040	IO	IO,IEC[r]	IO,IEC[r]	IO,IEC[r]	IO,IEC[r]	IO,IEC[r]	IO,IEC[r]	IO,IEC[r]	IO,IEC[r]	-
100050	-	-	-	-	-	-	-	-	-	-
100060	-	-	-	-	-	-	-	-	-	-
100070	-	-	-	-	-	-	-	-	-	-
100080	-	-	-	-	-	-	-	-	-	-
100090	-	-	-	-	-	-	-	-	-	-
100100	-	-	-	-	-	-	-	-	-	-
100110	-	-	-	-	-	-	-	-	-	-
100120	-	-	-	-	-	-	-	-	-	-
100130	-	-	-	-	-	-	-	-	-	-
100140	-	-	-	-	-	-	-	-	-	-
100150	-	-	-	-	-	-	-	-	-	-
100160	-	-	-	-	-	-	-	-	-	-
100170	-	-	-	-	-	-	-	-	-	-
100180	-	-	-	-	-	-	-	-	-	-
100190	-	-	-	-	-	-	-	-	-	-
100200	-	-	-	-	-	-	-	-	-	-
100210	-	-	-	-	-	-	-	-	-	-
100220	-	-	-	-	-	-	-	-	-	-
100230	-	-	-	-	-	-	-	-	-	-
100240	-	-	-	-	-	-	-	-	-	-
100250	-	-	-	-	-	-	-	-	-	-
100260	-	-	-	-	-	-	-	-	-	-
100270	-	-	-	-	-	-	-	-	-	-
100280	-	-	-	-	-	-	-	-	-	-
100290	-	-	-	-	-	-	-	-	-	-
100300	-	-	-	-	-	-	-	-	-	-
100310	-	-	-	-	-	-	-	-	-	-
100320	-	-	-	-	-	-	-	-	-	-
100330	-	-	-	-	-	-	-	-	-	-
100340	-	-	-	-	-	-	-	-	-	-
100350	-	-	-	-	-	-	-	-	-	-
100360	-	-	-	-	-	-	-	-	-	-
100370	-	-	-	-	-	-	-	-	-	-
100380	-	-	-	-	-	-	-	-	-	-
100390	-	-	-	-	-	-	-	-	-	-
100400	-	-	-	-	-	-	-	-	-	-
100410	-	-	-	-	-	-	-	-	-	-
100420	-	-	-	-	-	-	-	-	-	-
100430	-	-	-	-	-	-	-	-	-	-
100440	-	-	-	-	-	-	-	-	-	-
100450	-	-	-	-	-	-	-	-	-	-

table continued...

State RAM usage overview

	0	1	2	3	4	5	6	7	8	9
100460	-	-	-	-	-	-	-	-	-	-
100470	-	-	-	-	-	-	-	-	-	-
100480	-	-	-	-	-	-	-	-	-	-
100490	-	-	-	-	-	-	-	-	-	-
100500	-	-	-	-	-	-	-	-	-	-
100510	-	-	-							
3x		IO,IEC[r]	IO	IO,IEC[r]	IO,IEC[r]	IO,IEC[r]	IO,IEC[r]	IO,IEC[r]	IO,IEC[r]	IO,IEC[r]
300010	IO,IEC[r]	IO,IEC[r]	IO,IEC[r]	IO,IEC[r]	IO,IEC[r]	IO,IEC[r]	IO,IEC[r]	IO,IEC[r]	IO,IEC[r]	IO,IEC[r]
300020	IO,IEC[r]	IO,IEC[r]	IO,IEC[r]	IO,IEC[r]	IO,IEC[r]	IO	IO	IO	IO	IO
300030	IO	IO	IO	-	-	-	-	-	-	-
300040	-	-	-	-	-	-	-	-	-	
4x		IO	IO,IEC[w]	IO,IEC[w]	IO,IEC[w]	IO	-	-	-	IO
400010	IO	IO	IO	IO	IO	IO	IO	IO	IO	IO
400020	IO	IO	IO	IO	IO	IO	IO	IO	IO	IO
400030	IO	IO	IO	IO	IO	IO	IO	IO	IO	IO
400040	IO	-	-	-	-	-	-	-	-	-
400050	CFG	CFG	CFG	CFG	CFG	CFG	CFG	CFG	-	-
400060	-	-	-	-	-	-	-	-	-	-
400070	-	-	-	-	-	-	-	-	-	-
400080	-	-	-	-	-	-	-	-	-	-
400090	CFG	-	-	-	-	-	-	-	-	-
400100	IEC[w]	IEC[w]	IEC[rw]	IEC[rw]	IEC[rw]	IEC[rw]	IEC[rw]	IEC[rw]	IEC[rw]	IEC[rw]
400110	IEC[rw]	IEC[rw]	IEC[rw]	IEC[rw]	IEC[w]	IEC[w]	IEC[rw]	IEC[rw]	IEC[rw]	IEC[rw]
400120	IEC[rw]	IEC[rw]	IEC[rw]	IEC[rw]	IEC[rw]	IEC[rw]	IEC[rw]	IEC[rw]	IEC[rw]	IEC[rw]
400130	IEC[w]	IEC[w]	IEC[rw]	IEC[rw]	IEC[rw]	IEC[rw]	IEC[rw]	IEC[rw]	IEC[rw]	IEC[rw]
400140	IEC[rw]	IEC[rw]	IEC[w]	IEC[w]	IEC[w]	IEC[w]	VAR	VAR	VAR	VAR
400150	IEC[w]	IEC[w]	IEC[rw]	IEC[rw]	IEC[rw]	IEC[rw]	IEC[rw]	IEC[rw]	IEC[rw]	IEC[rw]
400160	IEC[rw]	IEC[rw]	IEC[rw]	IEC[rw]	IEC[rw]	IEC[rw]	IEC[rw]	IEC[rw]	IEC[rw]	IEC[rw]
400170	IEC[rw]	IEC[rw]	IEC[w]	IEC[w]	-	-	-	-	-	-
400180	-	-	-	-	-	-	-	-	-	-
400190	-	-	-	-	-	-	-	-	-	-
400200	-	-	-	-	IEC[w]	IEC[w]	IEC[w]	IEC[w]	IEC[w]	IEC[w]
400210	IEC[w]	IEC[w]	IEC[w]	IEC[w]	IEC[w]	IEC[w]	IEC[w]	IEC[w]	IEC[w]	IEC[w]
400220	VAR	VAR	IEC[w]	IEC[w]	IEC[w]	IEC[w]	IEC[w]	IEC[w]	IEC[w]	IEC[w]
400230	IEC[w]	IEC[w]	IEC[w]	IEC[w]	-	-	-	-	-	-
400240	-	-	-	-	-	-	-	-	-	-
400250	-	-	-	-	-	-	-	-	-	-
400260	-	-	-	-	-	-	-	-	-	-
400270	-	-	-	-	-	-	-	-	-	-
400280	-	-	-	-	-	-	-	-	-	-
400290	-	-	-	-	-	-	-	-	-	-
400300	VAR	VAR	VAR	VAR	VAR	VAR	VAR	VAR	VAR	VAR
400310	VAR	VAR	VAR	VAR	VAR	VAR	VAR	VAR	-	IEC[r]
400320	IEC[r]	IEC[r]	IEC[r]	IEC[r]	IEC[r]	IEC[r]	IEC[r]	IEC[r]	IEC[r]	IEC[r]
400330	IEC[r]	IEC[r]	IEC[r]	IEC[r]	IEC[r]	IEC[r]	IEC[r]	IEC[r]	IEC[r]	IEC[r]
400340	IEC[r]	IEC[r]	IEC[r]	IEC[r]	IEC[r]	IEC[r]	IEC[r]	IEC[r]	IEC[r]	IEC[r]
400350	IEC[r]	IEC[r]	IEC[r]	IEC[r]	IEC[r]	IEC[r]	IEC[r]	IEC[r]	IEC[r]	IEC[r]
400360	IEC[r]	IEC[r]	IEC[r]	IEC[r]	IEC[r]	IEC[r]	IEC[r]	IEC[r]	IEC[r]	IEC[r]

table continued...

State RAM usage overview

	0	1	2	3	4	5	6	7	8	9
400370	IEC[r]	IEC[r]	IEC[r]	IEC[r]	IEC[r]	IEC[r]	IEC[r]	IEC[r]	IEC[r]	IEC[r]
400380	IEC[r]	IEC[r]	IEC[r]	IEC[r]	IEC[r]	IEC[r]	IEC[r]	IEC[r]	IEC[r]	IEC[r]
400390	IEC[r]	IEC[r]	IEC[r]	IEC[r]	IEC[r]	IEC[r]	IEC[r]	IEC[r]	IEC[r]	IEC[r]
400400	IEC[r]	IEC[r]	IEC[r]	IEC[r]	IEC[r]	IEC[r]	IEC[r]	IEC[r]	IEC[r]	IEC[r]
400410	IEC[r]	IEC[r]	IEC[r]	IEC[r]	IEC[r]	IEC[r]	IEC[r]	IEC[r]	IEC[r]	IEC[r]
400420	IEC[r]	IEC[r]	IEC[r]	IEC[r]	IEC[r]	IEC[r]	IEC[r]	IEC[r]	IEC[r]	IEC[r]
400430	IEC[r]	IEC[r]	IEC[r]	IEC[r]	IEC[r]	IEC[r]	IEC[r]	IEC[r]	IEC[r]	IEC[r]
400440	IEC[r]	IEC[r]	IEC[r]	IEC[r]	IEC[r]	IEC[r]	IEC[r]	IEC[r]	IEC[r]	IEC[r]
400450	IEC[r]	IEC[r]	IEC[r]	IEC[r]	IEC[r]	IEC[r]	IEC[r]	IEC[r]	IEC[r]	IEC[r]
400460	IEC[r]	IEC[r]	IEC[r]	IEC[r]	IEC[r]	IEC[r]	IEC[r]	IEC[r]	IEC[r]	IEC[r]
400470	IEC[r]	IEC[r]	IEC[r]	IEC[r]	IEC[r]	IEC[r]	IEC[r]	IEC[r]	IEC[r]	IEC[r]
400480	IEC[r]	IEC[r]	IEC[r]	IEC[r]	IEC[r]	IEC[r]	IEC[r]	IEC[r]	IEC[r]	IEC[r]
400490	IEC[r]	IEC[r]	IEC[r]	IEC[r]	IEC[r]	IEC[r]	IEC[r]	IEC[r]	IEC[r]	IEC[r]
400500	IEC[r]	IEC[r]	IEC[r]	IEC[r]	IEC[r]	IEC[r]	IEC[r]	IEC[r]	IEC[r]	IEC[r]
400510	IEC[r]	IEC[r]	IEC[r]	IEC[r]	IEC[r]	IEC[r]	IEC[r]	IEC[r]	IEC[r]	IEC[r]
400520	IEC[r]	IEC[r]	IEC[r]	IEC[r]	IEC[r]	IEC[r]	IEC[r]	IEC[r]	IEC[r]	IEC[r]
400530	IEC[r]	IEC[r]	IEC[r]	IEC[r]	IEC[r]	IEC[r]	IEC[r]	IEC[r]	IEC[r]	IEC[r]
400540	IEC[r]	IEC[r]	IEC[r]	IEC[r]	IEC[r]	IEC[r]	IEC[r]	IEC[r]	IEC[r]	IEC[r]
400550	IEC[r]	IEC[r]	IEC[r]	IEC[r]	IEC[r]	IEC[r]	IEC[r]	IEC[r]	-	IEC[r]
400560	-	-	-	-	IEC[rw]	IEC[rw]	IEC[rw]	IEC[rw]	-	-
400570	-	-	-	-	-	-	-	-	-	-
400580	-	-	-	-	-	-	-	-	-	-
400590	-	-	-	-	-	-	-	-	-	-
400600	-	-	-	-	-	-	-	-	-	-
400610	-	-	-	-	-	-	-	-	-	-
400620	-	-	-	-	-	-	-	-	-	-
400630	-	-	-	-	-	-	-	-	-	-
400640	-	-	-	-	-	-	-	-	-	-
400650	-	-	-	-	-	-	-	-	-	-
400660	-	-	-	-	-	-	-	-	-	-
400670	-	-	-	-	-	-	-	-	-	-
400680	-	-	-	-	-	-	-	-	-	-
400690	-	-	-	-	-	-	-	-	-	-
400700	-	-	-	-	-	-	-	-	-	-
400710	-	-	-	-	-	-	-	-	-	-
400720	-	-	-	-	-	-	-	-	-	-
400730	-	-	-	-	-	-	-	-	-	-
400740	-	-	-	-	-	-	-	-	-	-
400750	-	-	-	-	-	-	-	-	-	-
400760	-	-	-	-	-	-	-	-	-	-
400770	-	-	-	-	-	-	-	-	-	-
400780	-	-	-	-	-	-	-	-	-	-
400790	-	-	-	-	-	-	-	-	-	-
400800	-	-	-	-	-	-	-	-	-	-
400810	-	-	-	-	-	-	-	-	-	-
400820	-	-	-	-	-	-	-	-	-	-
400830	-	-	-	-	-	-	-	-	-	-
400840	-	-	-	-	-	-	-	-	-	-
400850	-	-	-	-	-	-	-	-	-	-
400860	-	-	-	-	-	-	-	-	-	-

table continued...

State RAM usage overview

	0	1	2	3	4	5	6	7	8	9
400870	-	-	-	-	-	-	-	-	-	-
400880	-	-	-	-	-	-	-	-	-	-
400890	-	-	-	-	-	-	-	-	-	-
400900	-	IEC[r]	IEC[r]	IEC[r]	IEC[r]	IEC[r]	IEC[r]	-	-	-
400910	IEC[r]	IEC[r]	IEC[r]	IEC[r]	IEC[r]	IEC[r]	IEC[r]	IEC[r]	IEC[w]	IEC[w]
400920	IEC[r]	IEC[r]	IEC[r]	IEC[r]	IEC[r]	IEC[r]	IEC[w]	IEC[w]	IEC[w]	IEC[w]
400930	IEC[r]	IEC[r]	IEC[r]	IEC[r]	IEC[w]	IEC[w]	IEC[w]	IEC[w]	VAR	VAR
400940	IEC[r]	IEC[r]	IEC[w]	-	IEC[rw]	IEC[rw]	VAR	VAR	VAR	VAR
400950	VAR	VAR	VAR	-	IEC[w]	IEC[w]	IEC[r]	IEC[r]	IEC[r]	IEC[r]
400960	IEC[w]	IEC[w]	IEC[r]	IEC[r]	IEC[w]	IEC[w]	IEC[w]	IEC[w]	VAR	VAR
400970	VAR	VAR	IEC[r]	IEC[r]	IEC[w]	IEC[w]	IEC[r]	IEC[r]	IEC[r]	IEC[r]
400980	IEC[r]	IEC[r]	IEC[r]	IEC[r]	IEC[rw]	IEC[rw]	IEC[rw]	IEC[rw]	IEC[w]	IEC[w]
400990	IEC[w]	VAR	VAR	IEC[w]	IEC[w]	IEC[rw]	IEC[rw]	IEC[rw]	IEC[rw]	IEC[w]
401000	IEC[r]	IEC[r]	IEC[r]	IEC[r]	IEC[r]	IEC[r]	IEC[r]	IEC[r]	IEC[rw]	IEC[rw]
401010	IEC[w]	IEC[w]	IEC[r]	IEC[r]	IEC[r]	IEC[r]	IEC[r]	IEC[r]	IEC[r]	IEC[r]
401020	IEC[r]	IEC[r]	IEC[r]	IEC[r]	IEC[r]	IEC[r]	IEC[w]	IEC[w]	IEC[r]	IEC[r]
401030	IEC[r]	IEC[r]	IEC[r]	IEC[r]	IEC[r]	IEC[r]	-	-	-	-
401040	-	-	-	-	-	-	-	-	-	-
401050	-	-	-	-	-	-	-	-	-	-
401060	-	-	-	-	-	-	-	-	-	-
401070	-	-	-	-	-	-	-	-	-	-
401080	-	-	-	-	-	-	-	-	-	-
401090	-	-	-	-	-	-	-	-	-	-
401100	-	-	-	-	-	-	-	-	-	-
401110	-	-	-	-	-	-	-	-	-	-
401120	-	-	-	-	-	-	-	-	-	-
401130	-	-	-	-	-	-	-	-	-	-
401140	-	-	-	-	-	-	-	-	-	-
401150	-	-	-	-	-	-	-	-	-	-
401160	-	-	-	-	-	-	-	-	-	-
401170	-	-	-	-	-	-	-	-	-	-
401180	-	-	-	-	-	-	-	-	-	-
401190	-	-	-	-	-	-	-	-	-	-
401200	-	-	-	-	-	-	-	-	-	-
401210	-	-	-	-	-	-	-	-	-	-
401220	-	-	-	-	-	-	-	-	-	-
401230	-	-	-	-	-	-	-	-	-	-
401240	-	-	-	-	-	-	-	-	-	-
401250	-	-	-	-	-	-	-	-	-	-
401260	-	-	-	-	-	-	-	-	-	-
401270	-	-	-	-	-	-	-	-	-	-
401280	-	-	-	-	-	-	-	-	-	-
401290	-	-	-	-	-	-	-	-	-	-
401300	-	-	-	-	-	-	-	-	-	-
401310	-	-	-	-	-	-	-	-	-	-
401320	-	-	-	-	-	-	-	-	-	-
401330	-	-	-	-	-	-	-	-	-	-
401340	-	-	-	-	-	-	-	-	-	-
401350	-	-	-	-	-	-	-	-	-	-
401360	-	-	-	-	-	-	-	-	-	-

table continued...

State RAM usage overview

	0	1	2	3	4	5	6	7	8	9
401370	-	-	-	-	-	-	-	-	-	-
401380	-	-	-	-	-	-	-	-	-	-
401390	-	-	-	-	-	-	-	-	-	-
401400	-	-	-	-	-	-	-	-	-	-
401410	-	-	-	-	-	-	-	-	-	-
401420	-	-	-	-	-	-	-	-	-	-
401430	-	-	-	-	-	-	-	-	-	-
401440	-	-	-	-	-	-	-	-	-	-
401450	-	-	-	-	-	-	-	-	-	-
401460	-	-	-	-	-	-	-	-	-	-
401470	-	-	-	-	-	-	-	-	-	-
401480	-	-	-	-	-	-	-	-	-	-
401490	-	-	-	-	-	-	-	-	-	-
401500	IEC[rw]	IEC[rw]	IEC[rw]	IEC[rw]	IEC[rw]	IEC[rw]	IEC[rw]	IEC[rw]	IEC[rw]	IEC[rw]
401510	IEC[rw]	IEC[rw]	IEC[rw]	IEC[rw]	IEC[rw]	IEC[rw]	IEC[rw]	IEC[rw]	IEC[rw]	IEC[rw]
401520	IEC[rw]	IEC[rw]	IEC[rw]	IEC[rw]	IEC[rw]	IEC[rw]	IEC[rw]	IEC[rw]	IEC[rw]	IEC[rw]
401530	IEC[rw]	IEC[rw]	IEC[rw]	IEC[rw]	IEC[rw]	IEC[rw]	IEC[rw]	IEC[rw]	IEC[rw]	IEC[rw]
401540	IEC[rw]	IEC[rw]	IEC[rw]	IEC[rw]	IEC[rw]	IEC[rw]	IEC[rw]	IEC[rw]	IEC[rw]	IEC[rw]
401550	IEC[rw]	IEC[rw]	IEC[rw]	IEC[rw]	IEC[rw]	IEC[rw]	IEC[rw]	IEC[rw]	IEC[rw]	IEC[rw]
401560	IEC[rw]	IEC[rw]	IEC[rw]	IEC[rw]	IEC[rw]	IEC[rw]	IEC[rw]	IEC[rw]	IEC[rw]	IEC[rw]
401570	IEC[rw]	IEC[rw]	IEC[rw]	IEC[rw]	IEC[rw]	IEC[rw]	IEC[rw]	IEC[rw]	IEC[rw]	IEC[rw]
401580	IEC[rw]	IEC[rw]	IEC[rw]	IEC[rw]	IEC[rw]	IEC[rw]	IEC[rw]	IEC[rw]	IEC[rw]	IEC[rw]
401590	IEC[rw]	IEC[rw]	IEC[rw]	IEC[rw]	IEC[rw]	IEC[rw]	IEC[rw]	IEC[rw]	IEC[rw]	IEC[rw]
401600	IEC[rw]	IEC[rw]	IEC[rw]	IEC[rw]	IEC[rw]	IEC[rw]	IEC[rw]	IEC[rw]	IEC[rw]	IEC[rw]
401610	IEC[rw]	IEC[rw]	IEC[rw]	IEC[rw]	IEC[rw]	IEC[rw]	IEC[rw]	IEC[rw]	IEC[rw]	IEC[rw]
401620	IEC[rw]	IEC[rw]	IEC[rw]	IEC[rw]	IEC[rw]	IEC[rw]	IEC[rw]	IEC[rw]	IEC[rw]	IEC[rw]
401630	IEC[rw]	IEC[rw]	IEC[rw]	IEC[rw]	IEC[rw]	IEC[rw]	IEC[rw]	IEC[rw]	IEC[rw]	IEC[rw]
401640	IEC[rw]	IEC[rw]	IEC[rw]	IEC[rw]	IEC[rw]	IEC[rw]	IEC[rw]	IEC[rw]	IEC[rw]	IEC[rw]
401650	IEC[rw]	IEC[rw]	IEC[rw]	IEC[rw]	IEC[rw]	IEC[rw]	IEC[rw]	IEC[rw]	IEC[rw]	IEC[rw]
401660	IEC[rw]	IEC[rw]	IEC[rw]	IEC[rw]	IEC[rw]	IEC[rw]	IEC[rw]	IEC[rw]	IEC[rw]	IEC[rw]
401670	IEC[rw]	IEC[rw]	IEC[rw]	IEC[rw]	IEC[rw]	IEC[rw]	IEC[rw]	IEC[rw]	IEC[rw]	IEC[rw]
401680	IEC[rw]	IEC[rw]	IEC[rw]	IEC[rw]	IEC[rw]	IEC[rw]	IEC[rw]	IEC[rw]	IEC[rw]	IEC[rw]
401690	IEC[rw]	IEC[rw]	IEC[rw]	IEC[rw]	IEC[rw]	IEC[rw]	IEC[rw]	IEC[rw]	IEC[rw]	IEC[rw]
401700	IEC[rw]	IEC[rw]	IEC[rw]	IEC[rw]	IEC[rw]	IEC[rw]	IEC[rw]	IEC[rw]	IEC[rw]	IEC[rw]
401710	IEC[rw]	IEC[rw]	IEC[rw]	IEC[rw]	IEC[rw]	IEC[rw]	IEC[rw]	IEC[rw]	IEC[rw]	IEC[rw]
401720	IEC[rw]	IEC[rw]	IEC[rw]	IEC[rw]	IEC[rw]	IEC[rw]	IEC[rw]	IEC[rw]	IEC[rw]	IEC[rw]
401730	IEC[rw]	IEC[rw]	IEC[rw]	IEC[rw]	IEC[rw]	IEC[rw]	IEC[rw]	IEC[rw]	IEC[rw]	IEC[rw]
401740	IEC[rw]	IEC[rw]	IEC[rw]	IEC[rw]	IEC[rw]	IEC[rw]	IEC[rw]	IEC[rw]	IEC[rw]	IEC[rw]
401750	-	-	-	-	-	-	-	-	-	-
401760	-	-	-	-	-	-	-	-	-	-
401770	-	-	-	-	-	-	-	-	-	-
401780	-	-	-	-	-	-	-	-	-	-
401790	-	-	-	-	-	-	-	-	-	-
401800	-	-	-	-	-	-	-	-	-	-
401810	-	-	-	-	-	-	-	-	-	-
401820	-	-	-	-	-	-	-	-	-	-
401830	-	-	-	-	-	-	-	-	-	-
401840	-	-	-	-	-	-	-	-	-	-
401850	-	-	-	-	-	-	-	-	-	-
401860	-	-	-	-	-	-	-	-	-	-

table continued...

State RAM usage overview

	0	1	2	3	4	5	6	7	8	9
401870	-	-	-							

Execution order

Order	Section name	Section description
1	SYS_OH	
2	DAILY_FLOW_TOTAL_STORAGE_01	
3	DAILY_FLOW_TOTAL_STORAGE_02	
4	DAILY_FLOW_TOTAL_STORAGE_03	
5	SHUTDOWN	
6	DISCHARGE_WETWELL_AND_PUMP	
7	AIR_STRIPPER	
8	BAGFILTER_SCALENT_VGAC	
9	EXTRACTION_WELLS	
10	ANALOG	
11	AD_ALARMS	

Graph of section DAILY_FLOW_TOTAL_STORAGE_01

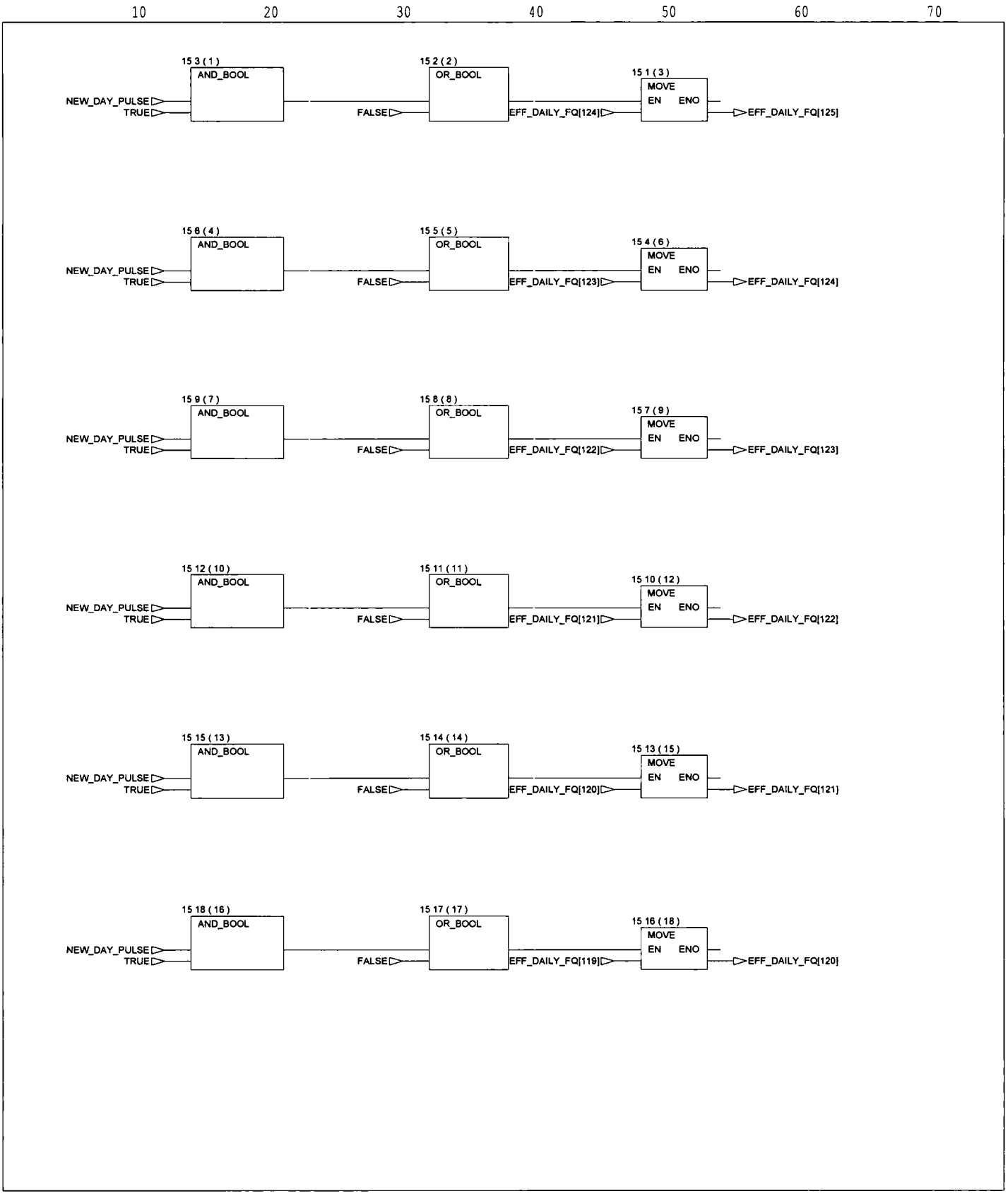

> page 93

Graph of section DAILY_FLOW_TOTAL_STORAGE_01

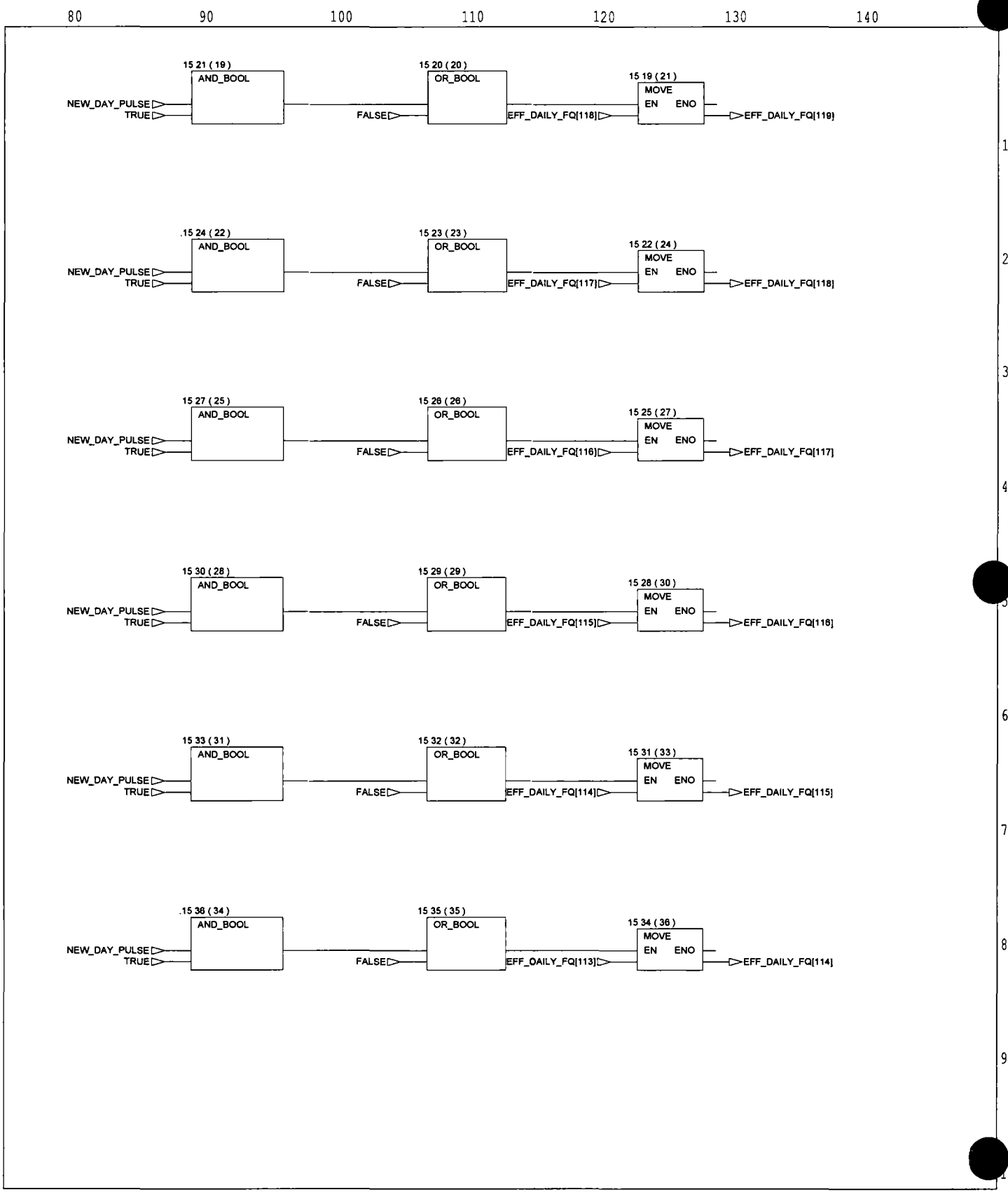

< page 89

> page 91

> page 94

Graph of section DAILY_FLOW_TOTAL_STORAGE_01

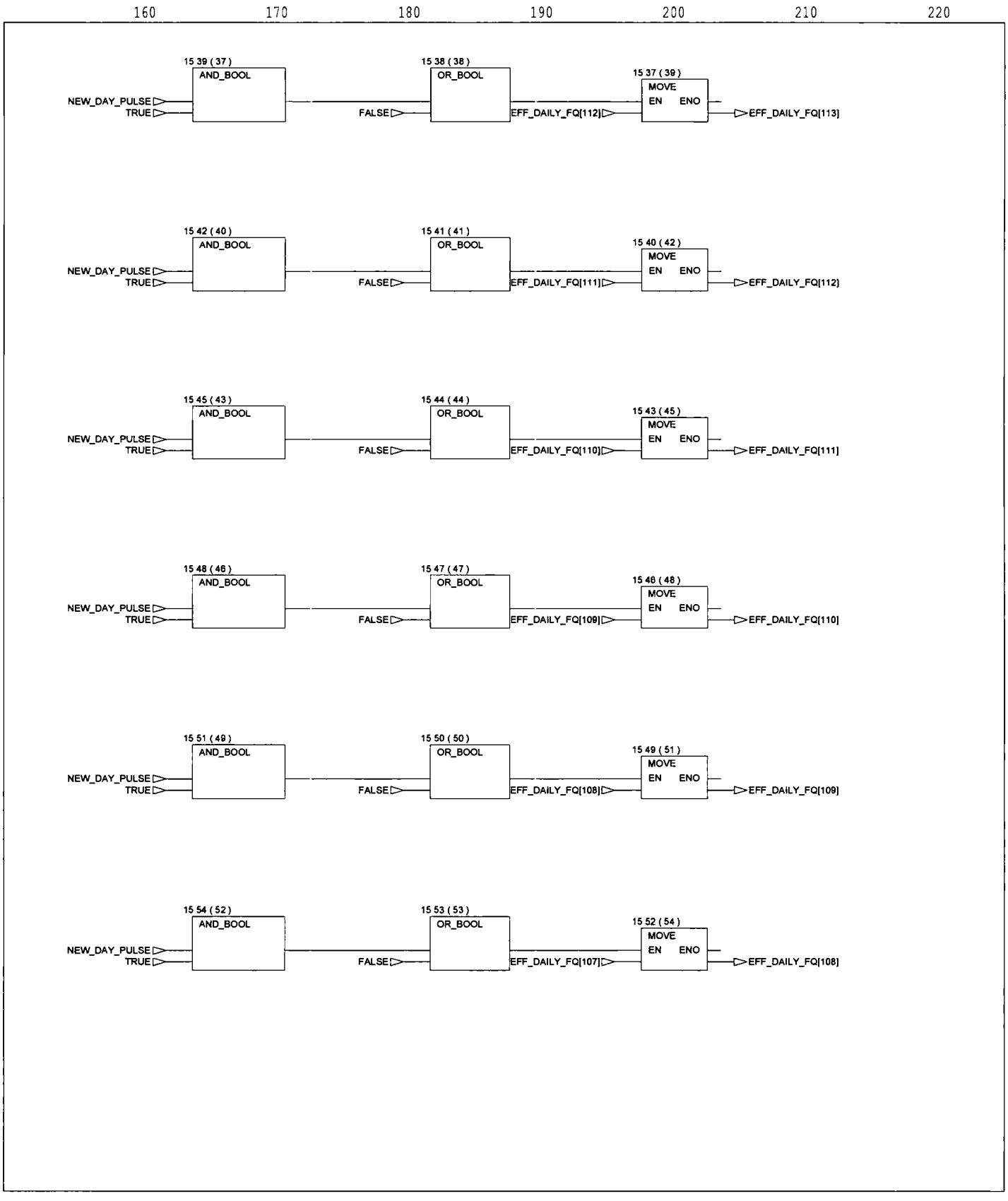

< page 90

page 92 >

> page 95

Graph of section DAILY_FLOW_TOTAL_STORAGE_01

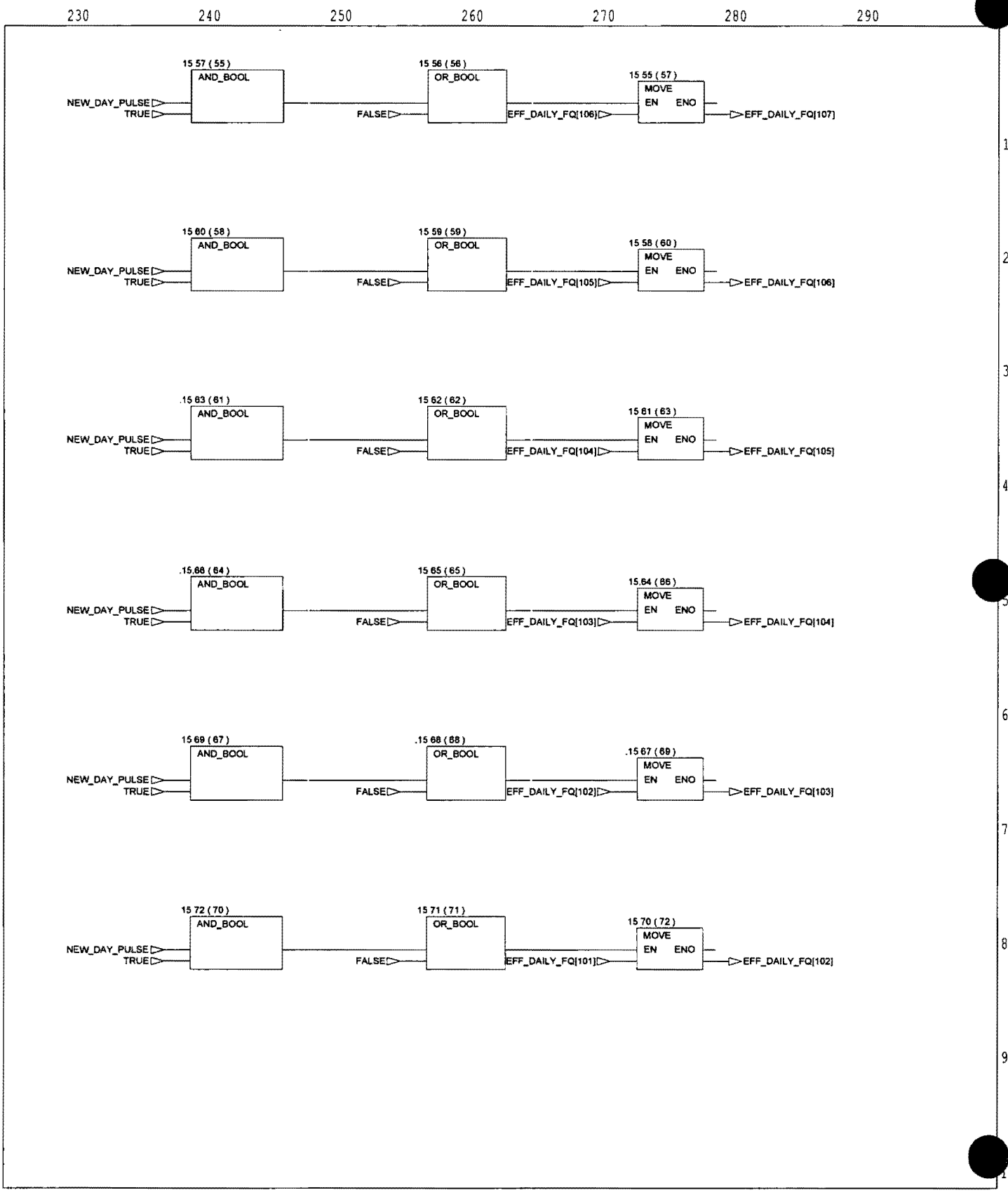

< page 91

> page 96

Graph of section DAILY_FLOW_TOTAL_STORAGE_01

< page 89

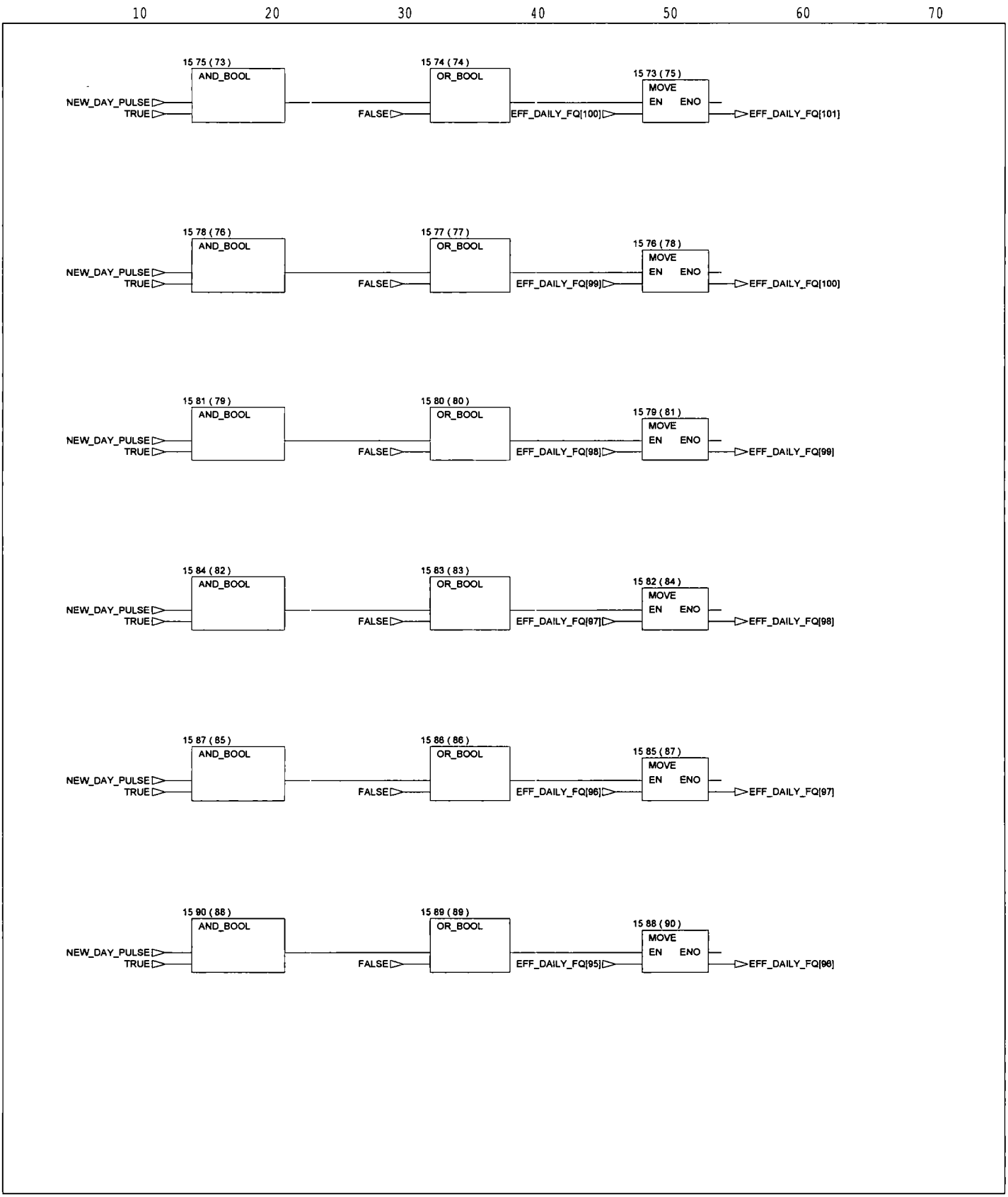

> page 97

Graph of section DAILY_FLOW_TOTAL_STORAGE_01

< page 90

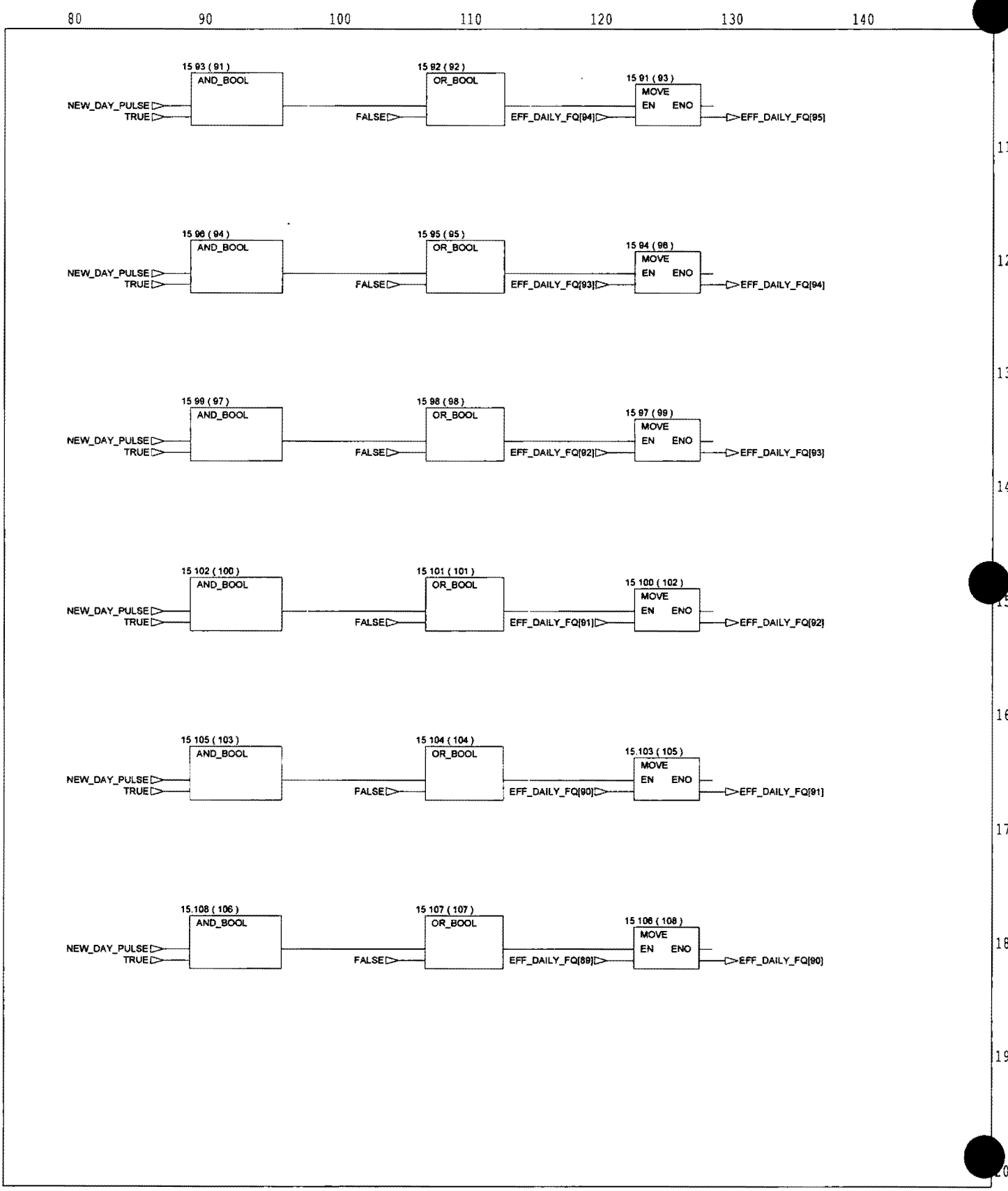

< page 93

> page 98

Graph of section DAILY_FLOW_TOTAL_STORAGE_01

< page 91

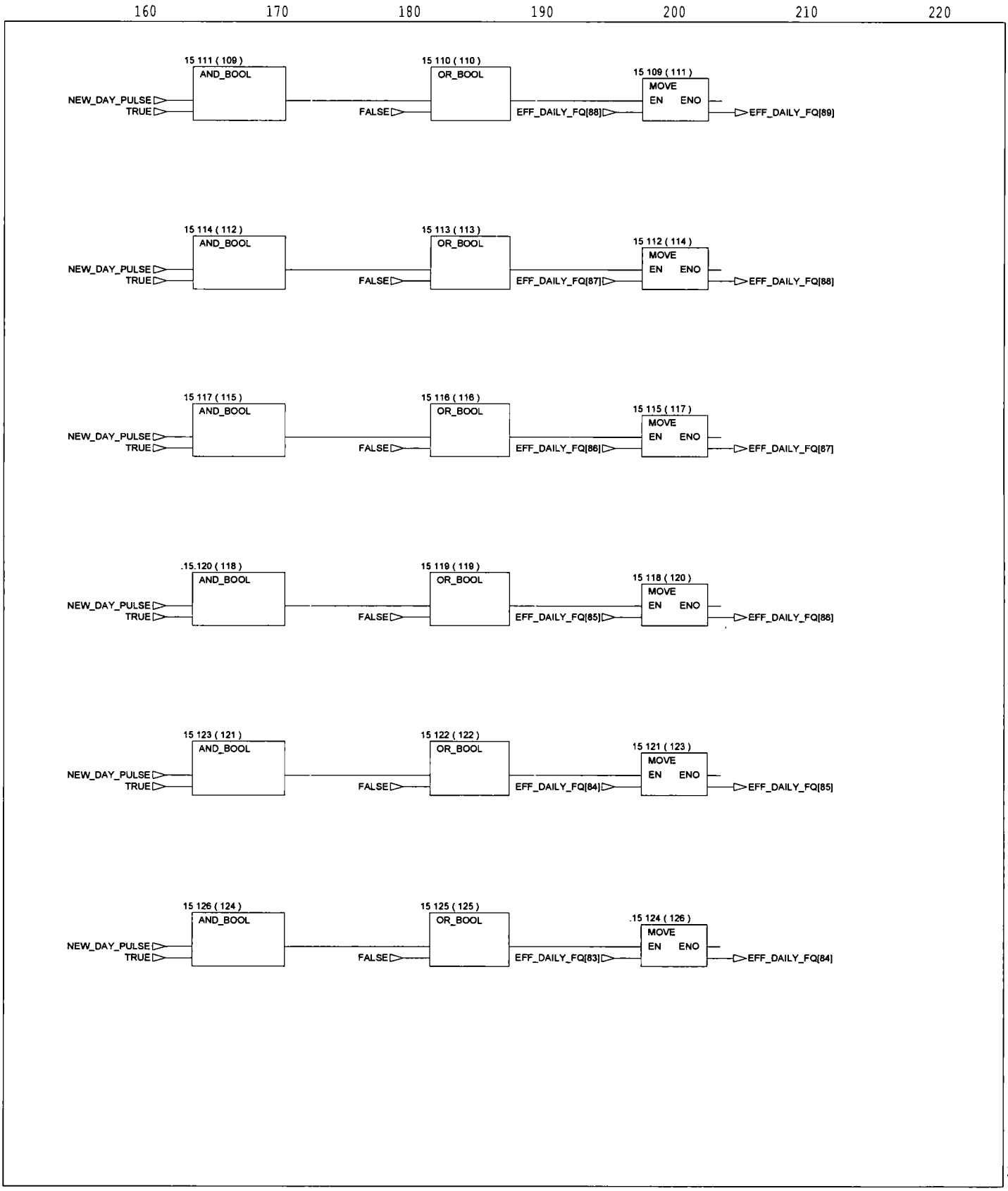

< page 94

> page 96

> page 99

Graph of section DAILY_FLOW_TOTAL_STORAGE_01

< page 92

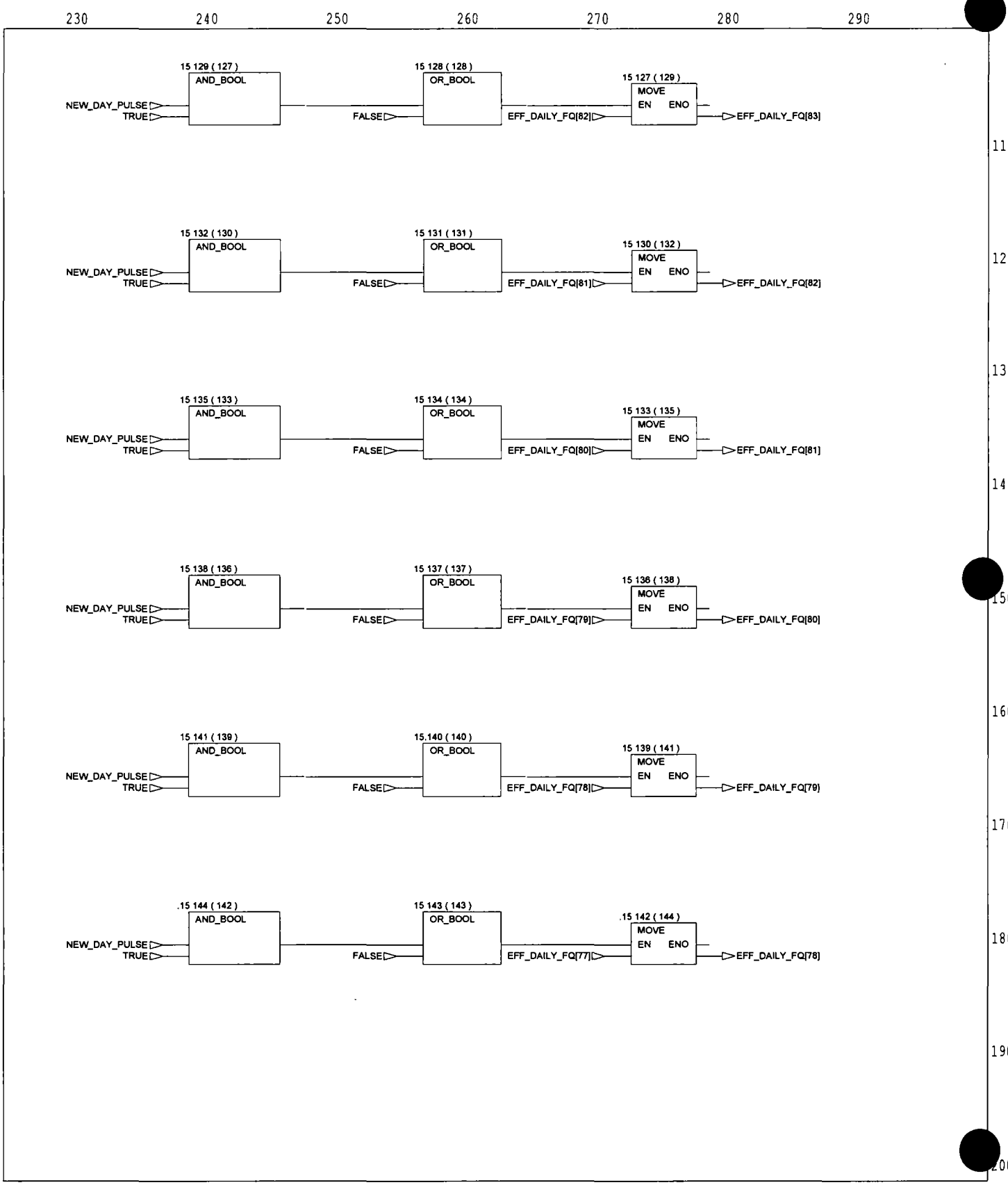

< page 95

> page 100

Graph of section DAILY_FLOW_TOTAL_STORAGE_01

< page 93

10 20 30 40 50 60 70

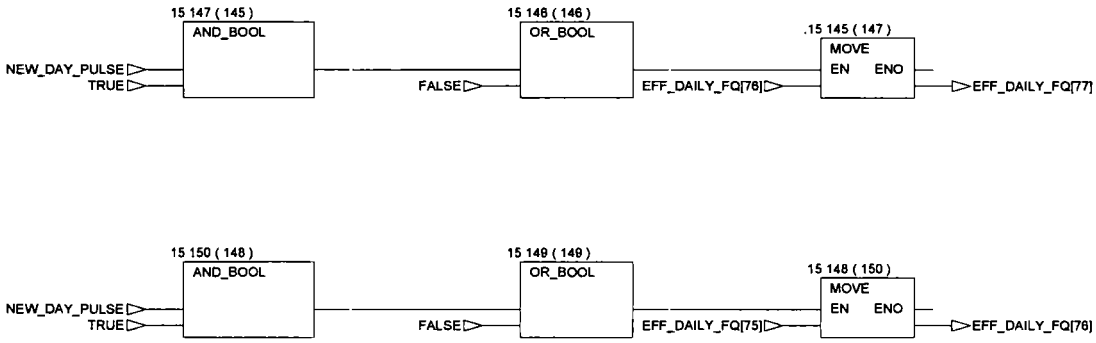

210

220

230

Graph of section DAILY_FLOW_TOTAL_STORAGE_01 < page 94

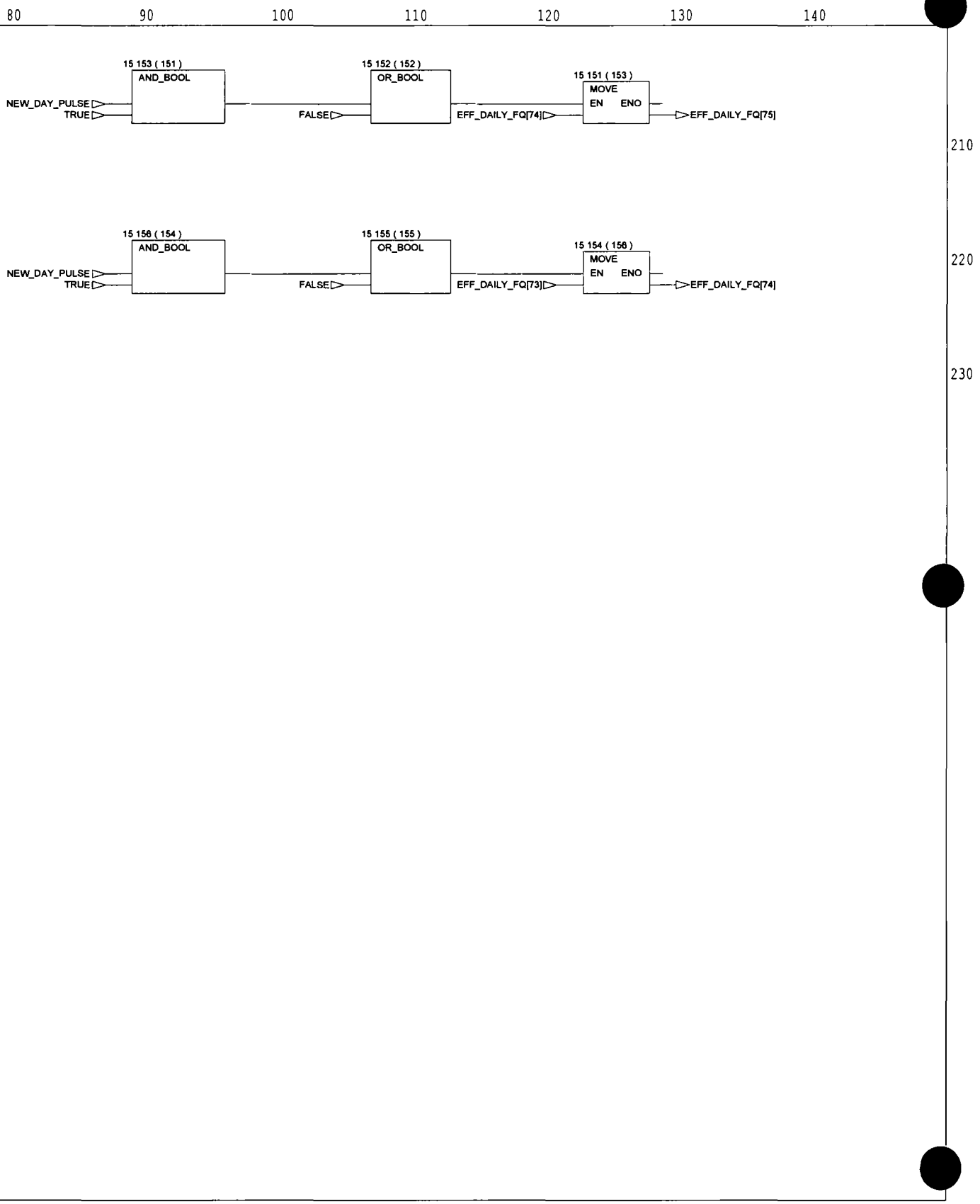

< page 97

Graph of section DAILY_FLOW_TOTAL_STORAGE_01 < page 95

160 170 180 190 200 210 220

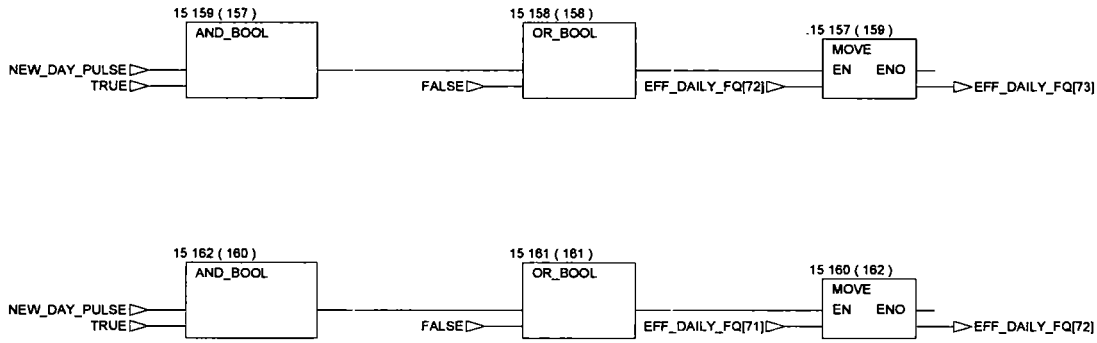

210

220

230

< page 98

> page 100

Graph of section DAILY_FLOW_TOTAL_STORAGE_01 < page 96

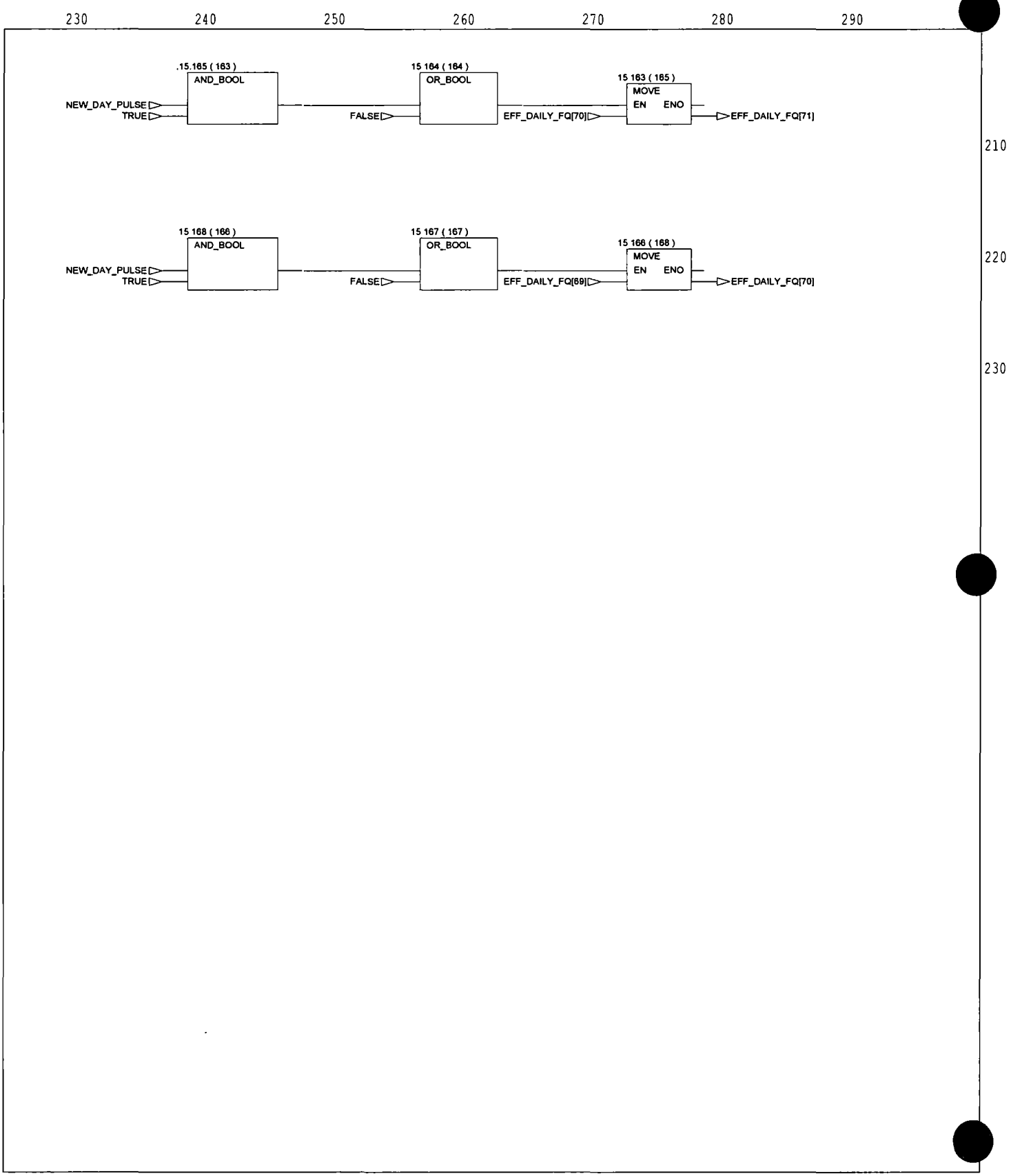

< page 99

Graph of section DAILY_FLOW_TOTAL_STORAGE_02

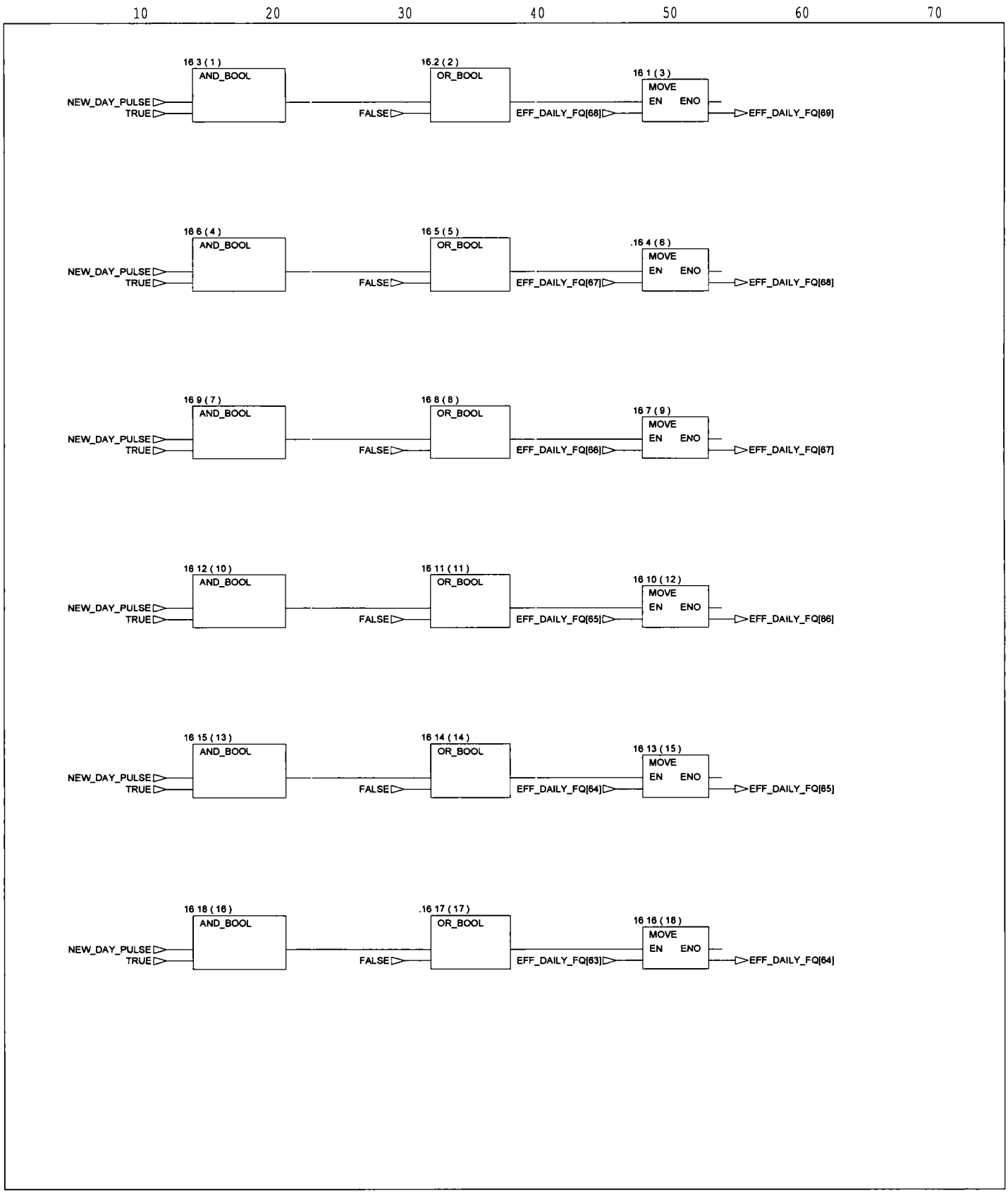

> page 105

Graph of section DAILY_FLOW_TOTAL_STORAGE_02

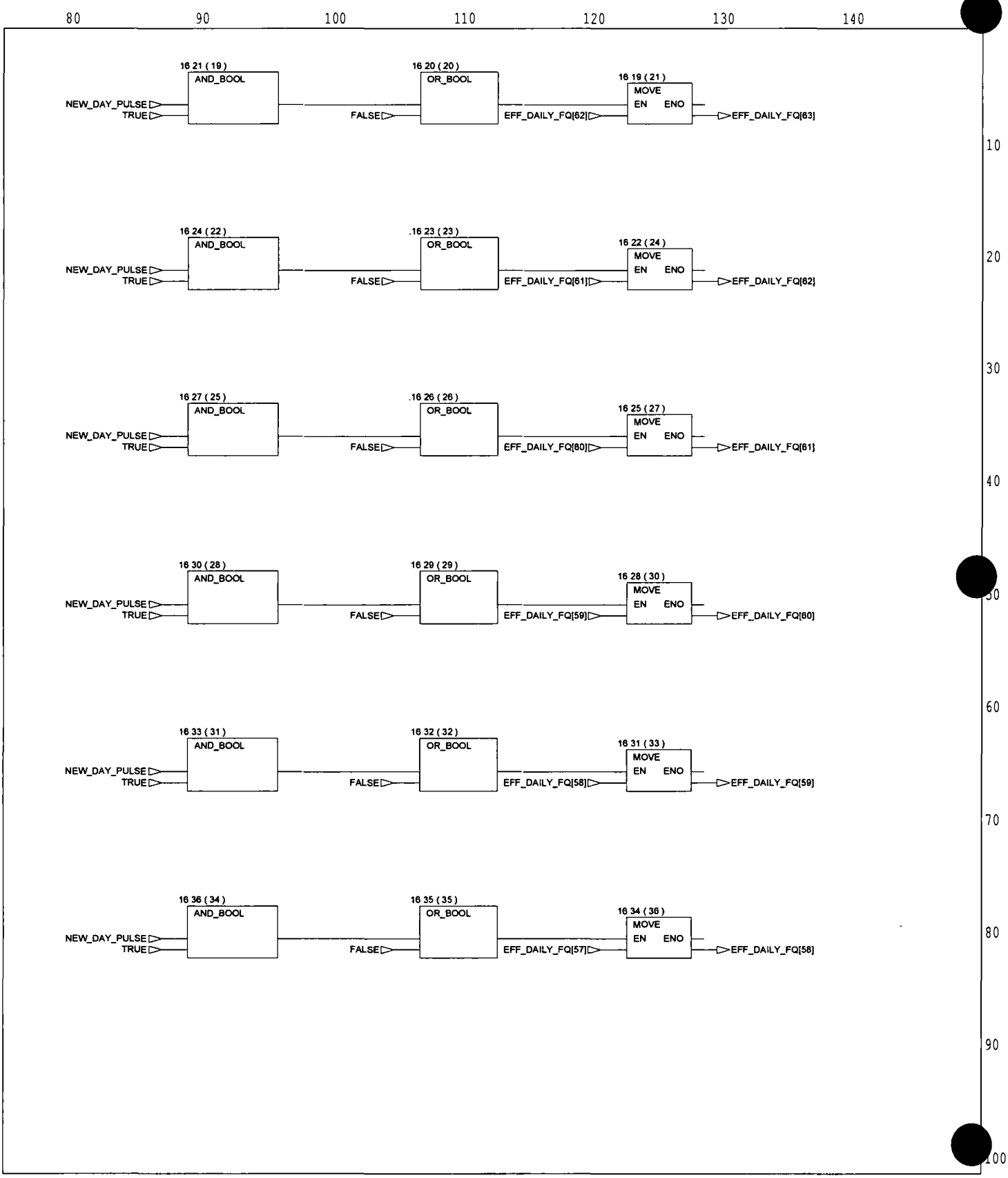

< page 101

> page 106

Graph of section DAILY_FLOW_TOTAL_STORAGE_02

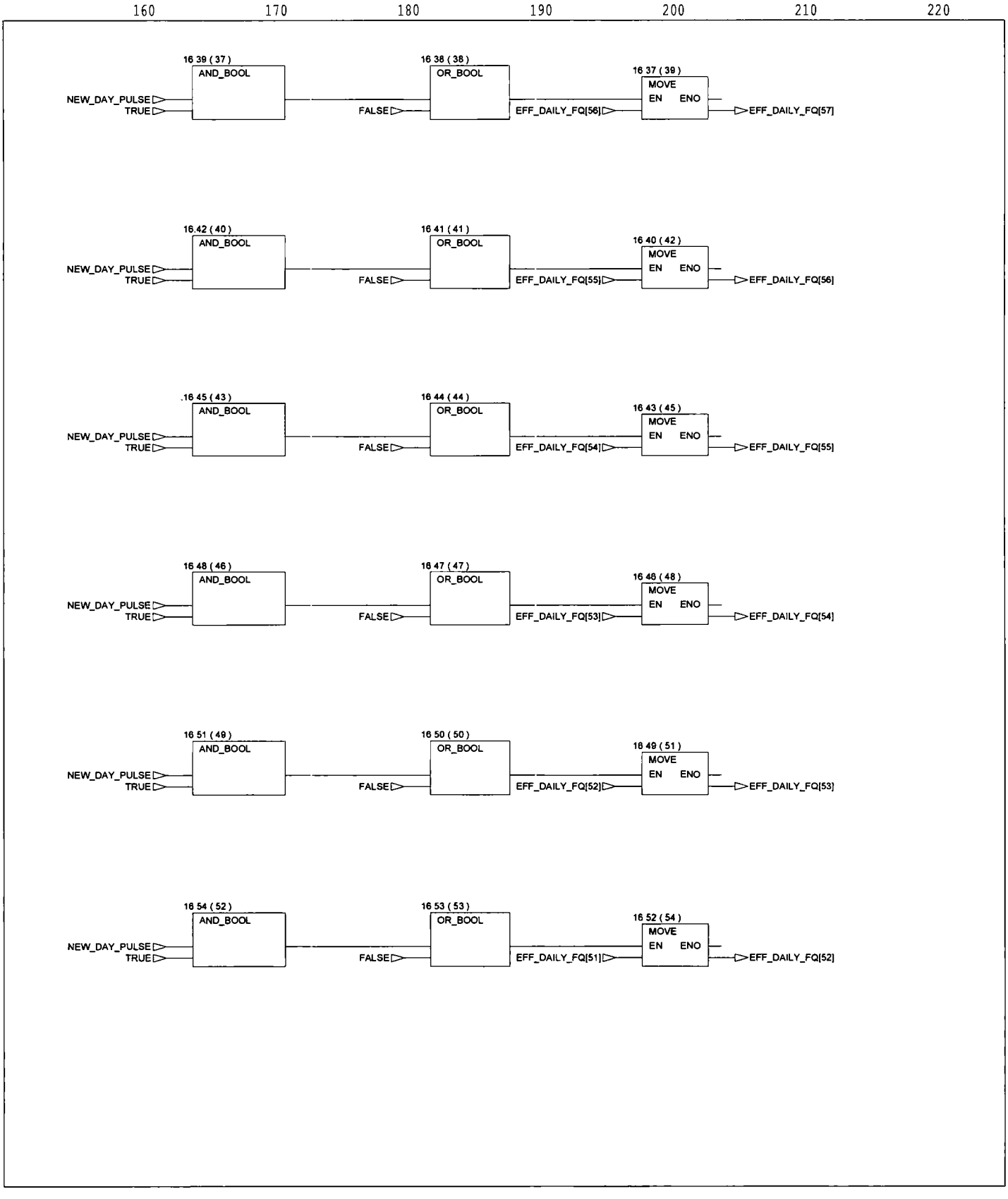

< page 102

page 104 >

> page 107

Graph of section DAILY_FLOW_TOTAL_STORAGE_02

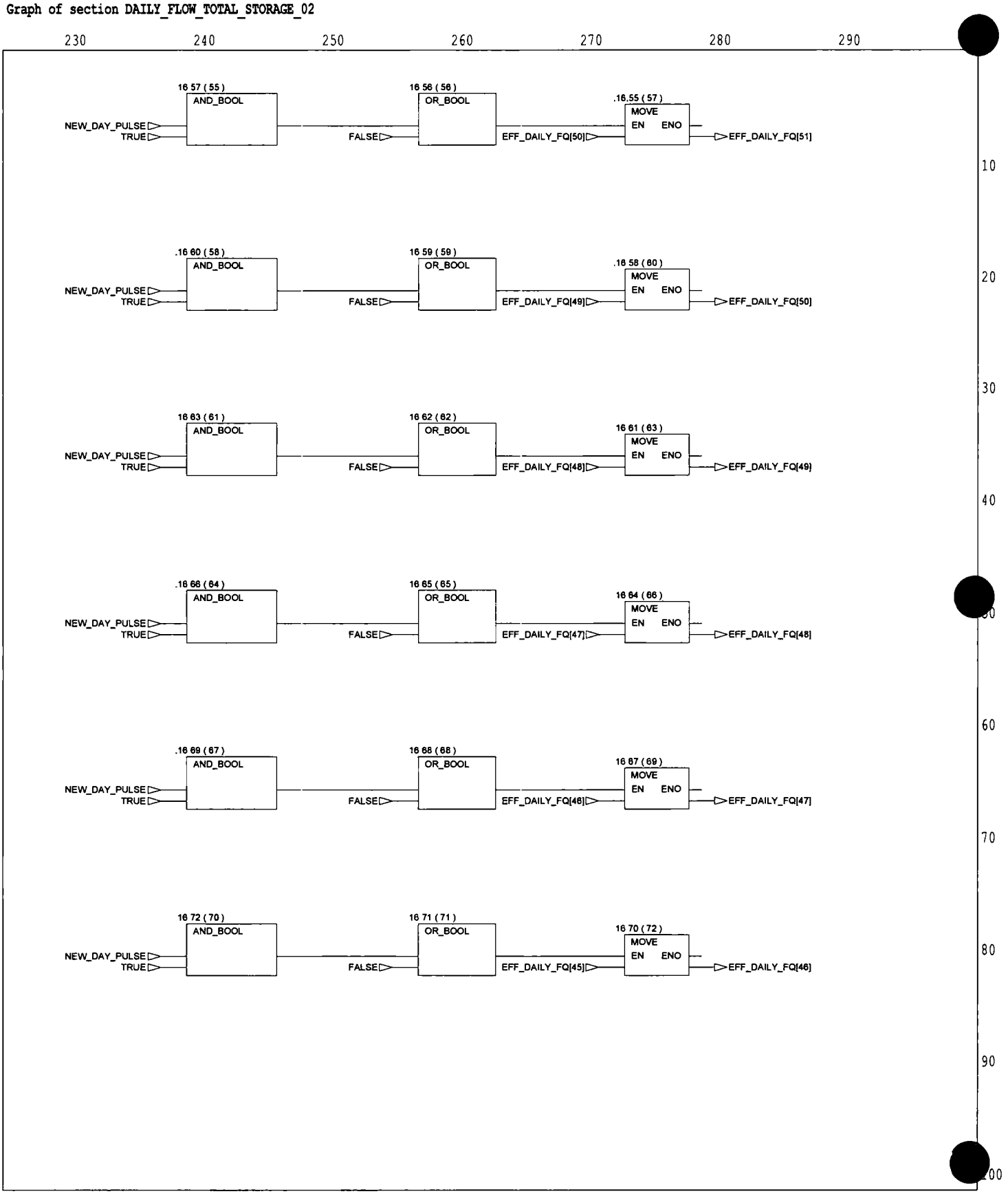

< page 103

> page 108

Graph of section DAILY_FLOW_TOTAL_STORAGE_02

< page 101

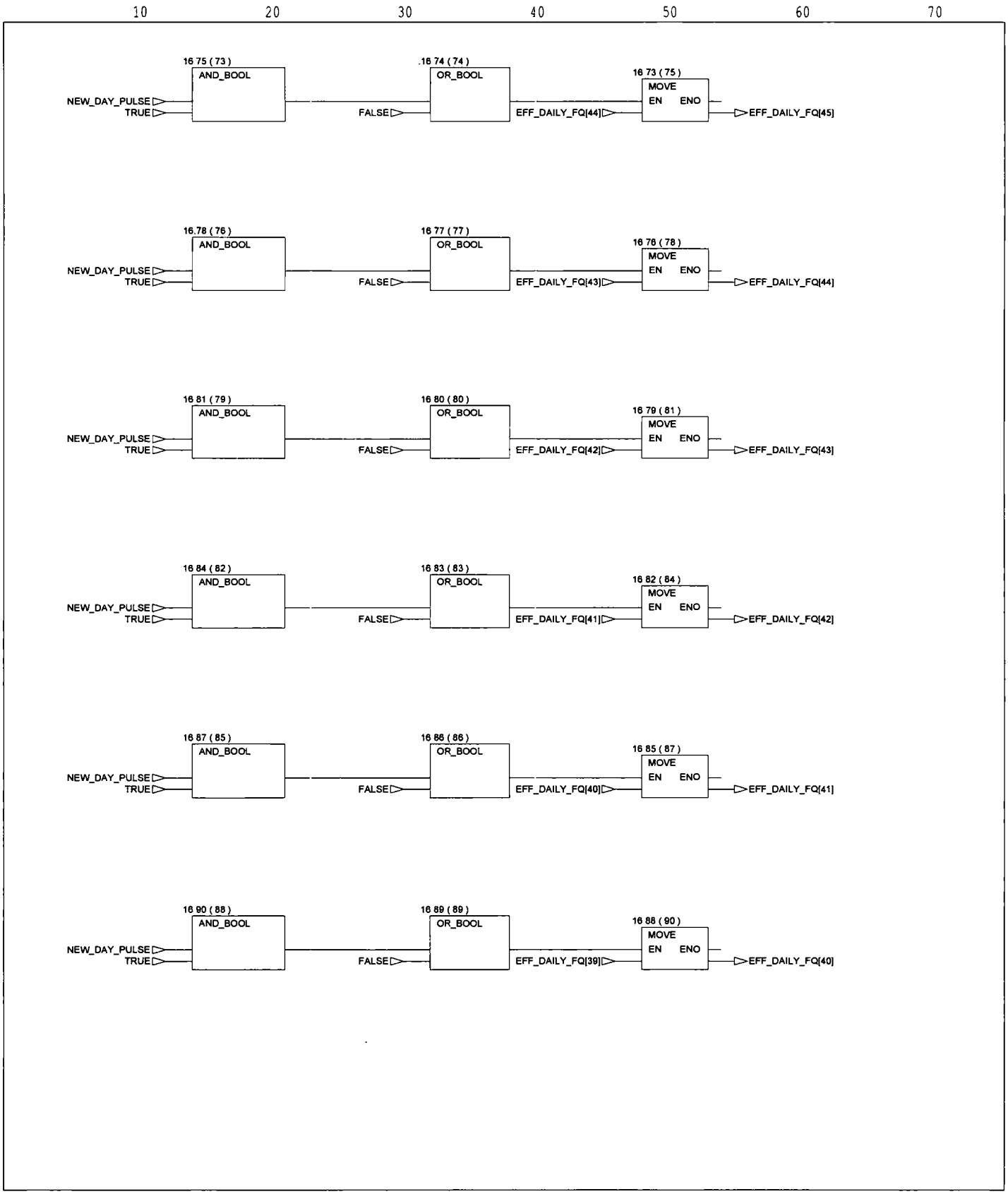

> page 109

Graph of section DAILY_FLOW_TOTAL_STORAGE_02

< page 102

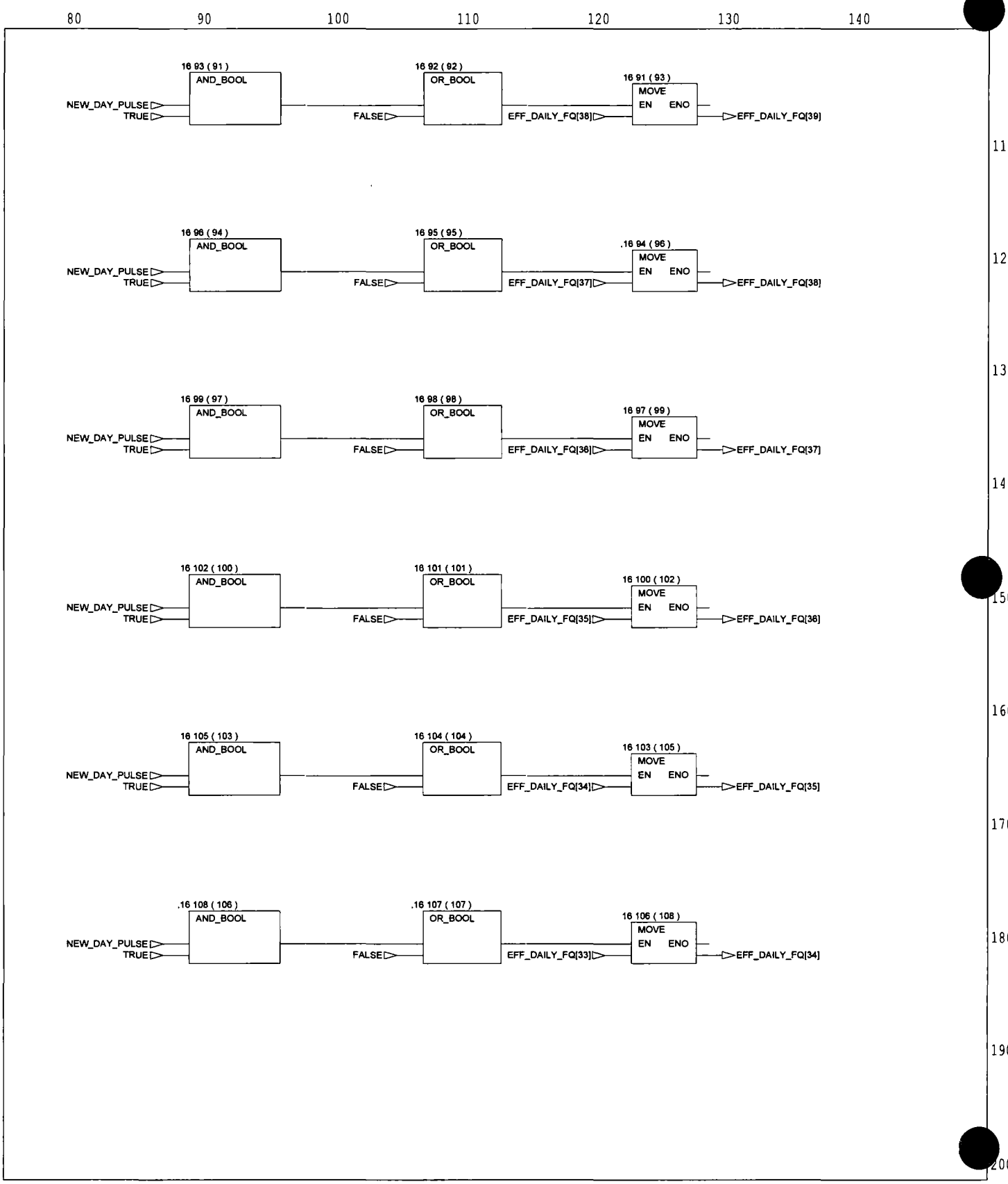

< page 105

> page 110

Graph of section DAILY_FLOW_TOTAL_STORAGE_02

< page 103

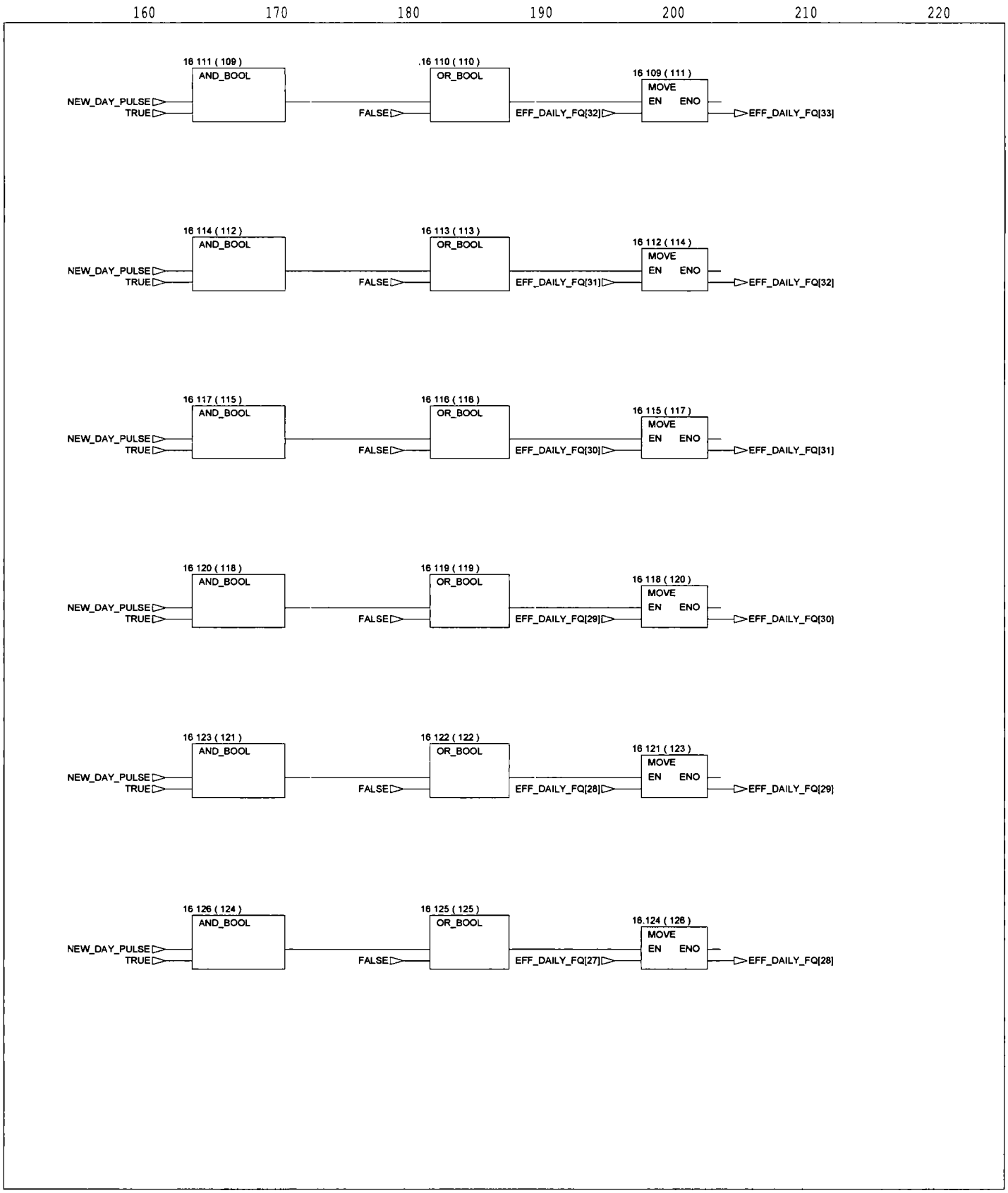

< page 106

> page 108

> page 111

Graph of section DAILY_FLOW_TOTAL_STORAGE_02

< page 104

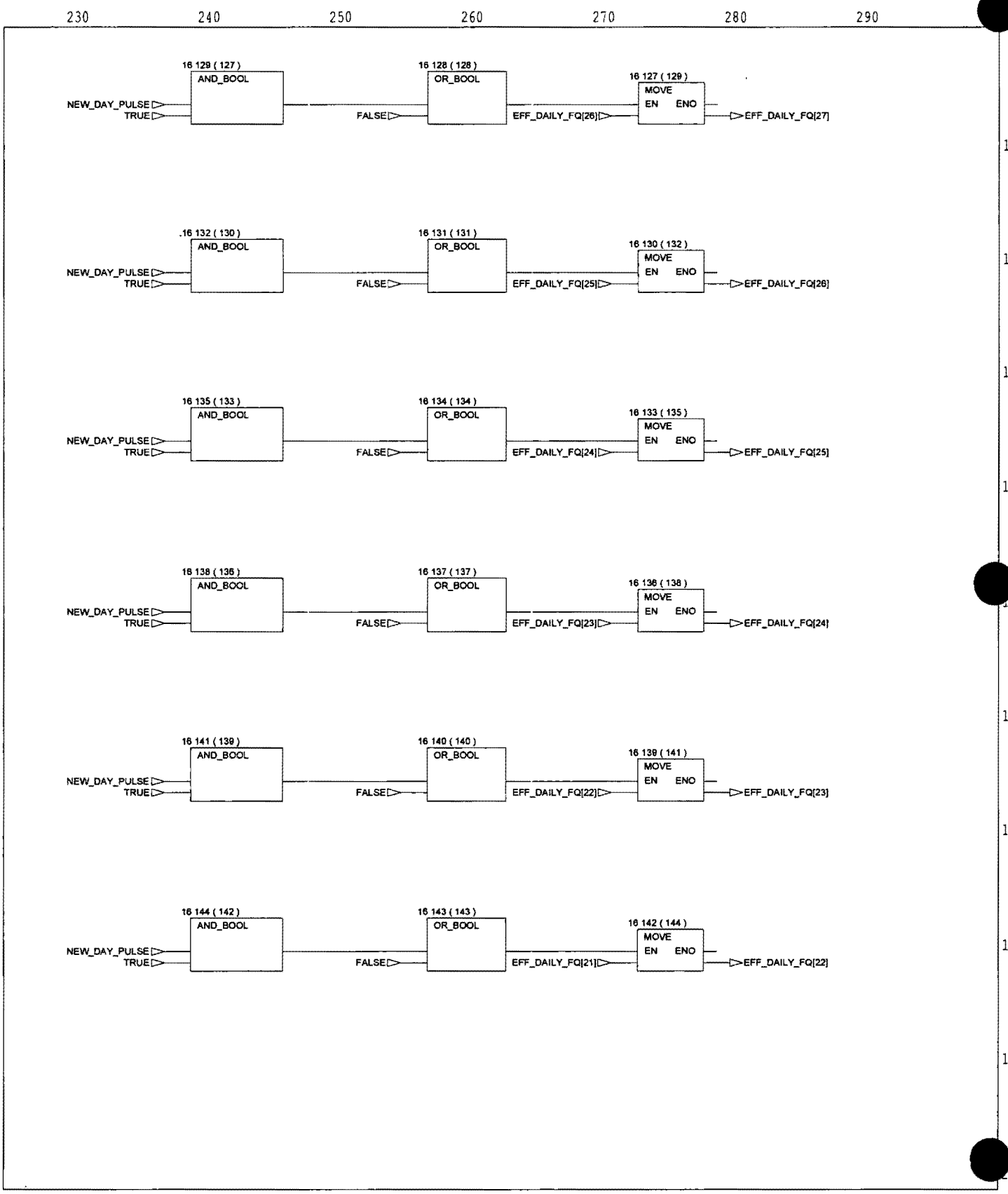

< page 107

> page 112

Graph of section DAILY_FLOW_TOTAL_STORAGE_02 < page 105

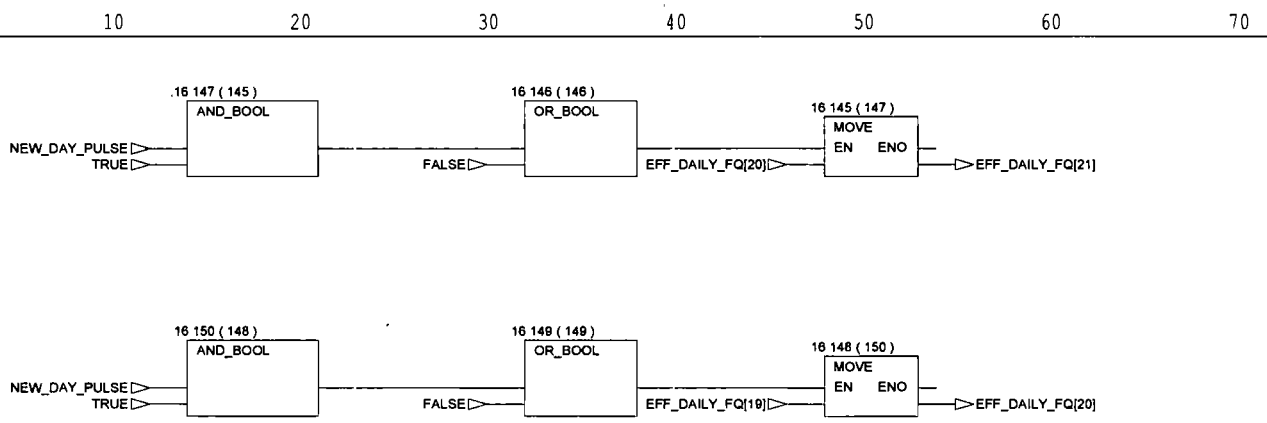

Graph of section DAILY_FLOW_TOTAL_STORAGE_02 < page 106

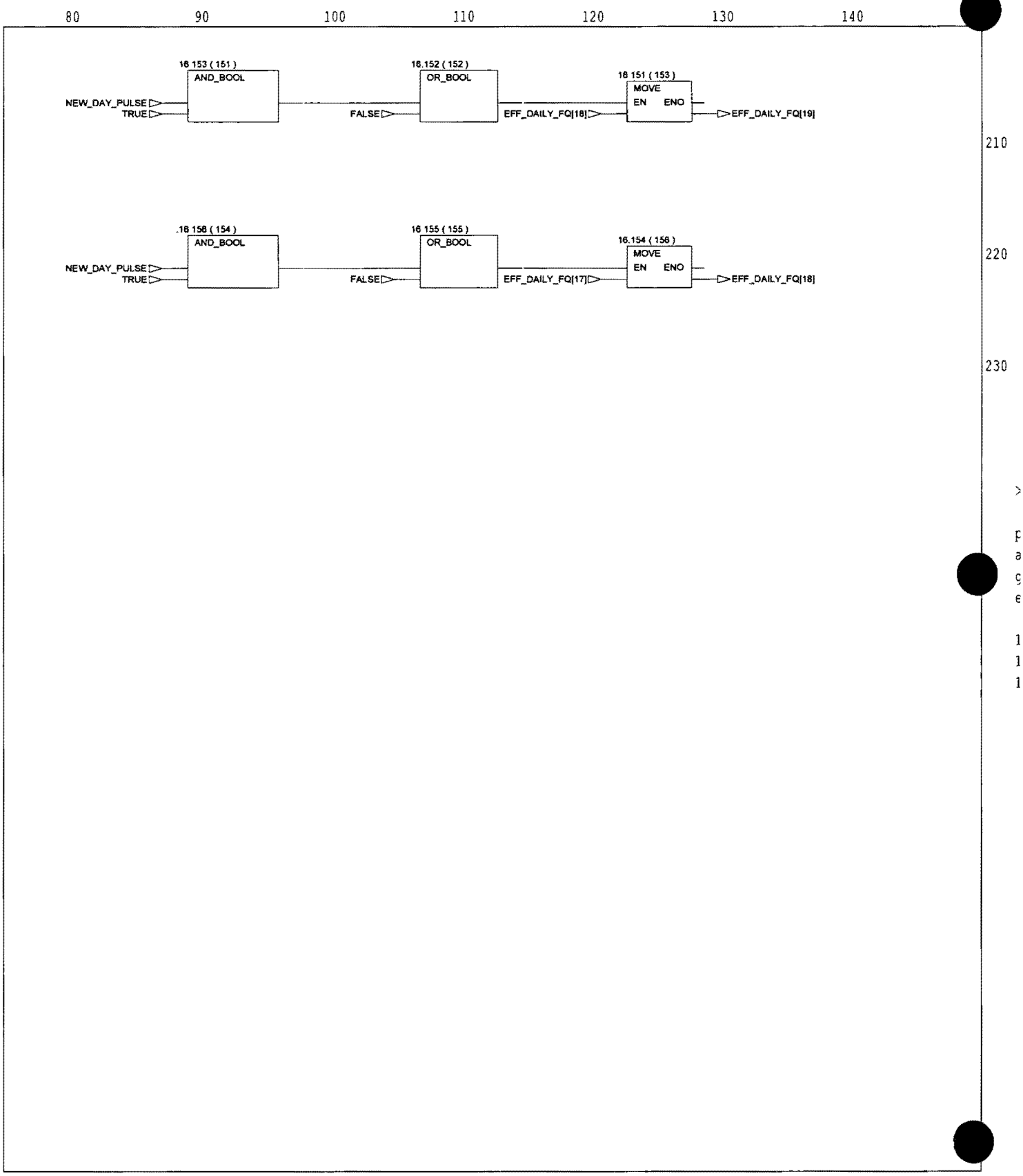

< page 109

> page 111

Graph of section DAILY_FLOW_TOTAL_STORAGE_02 < page 107

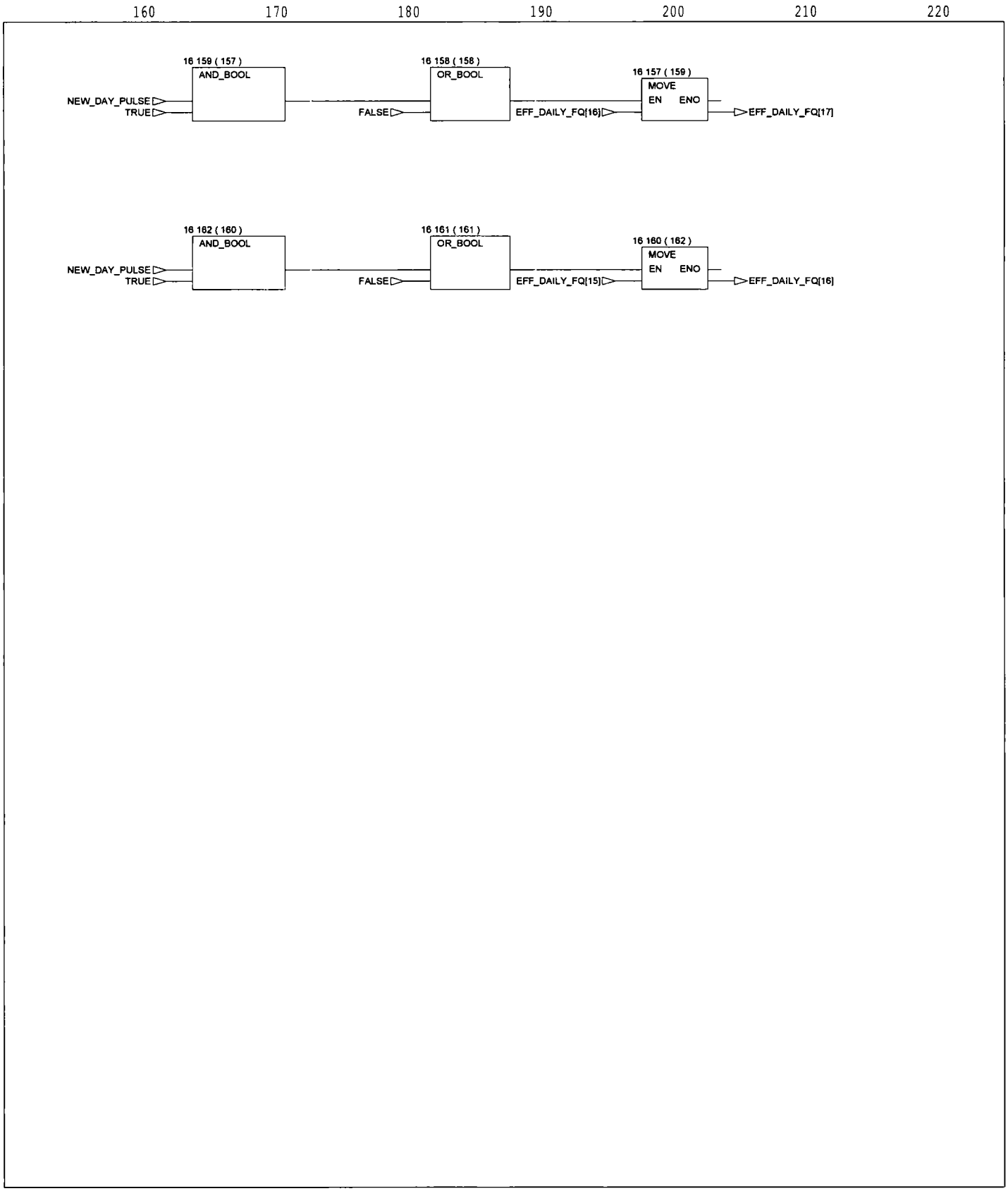

< page 110 > page 112

Graph of section DAILY_FLOW_TOTAL_STORAGE_02 < page 108

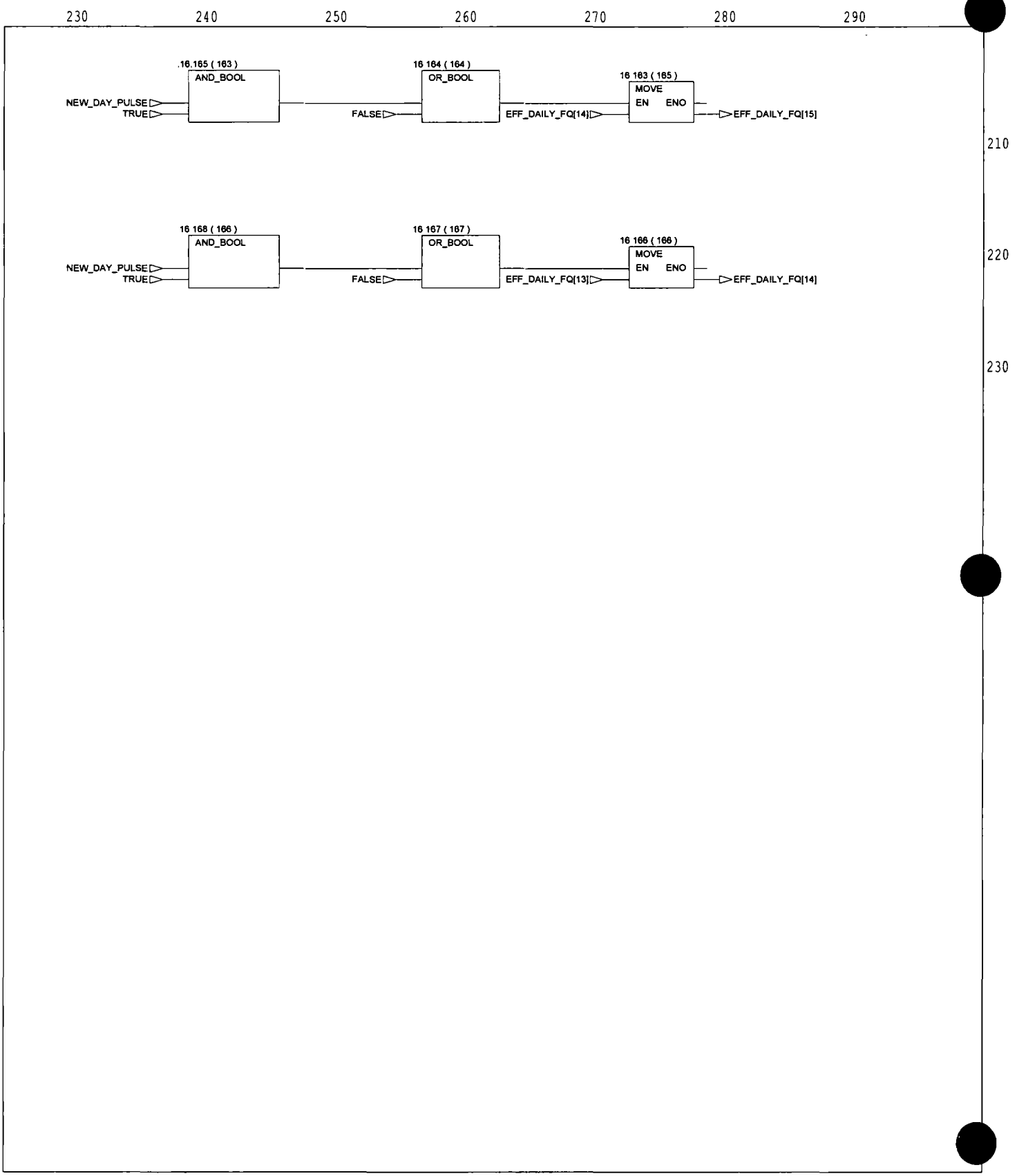

< page 111

Graph of section DAILY_FLOW_TOTAL_STORAGE_03

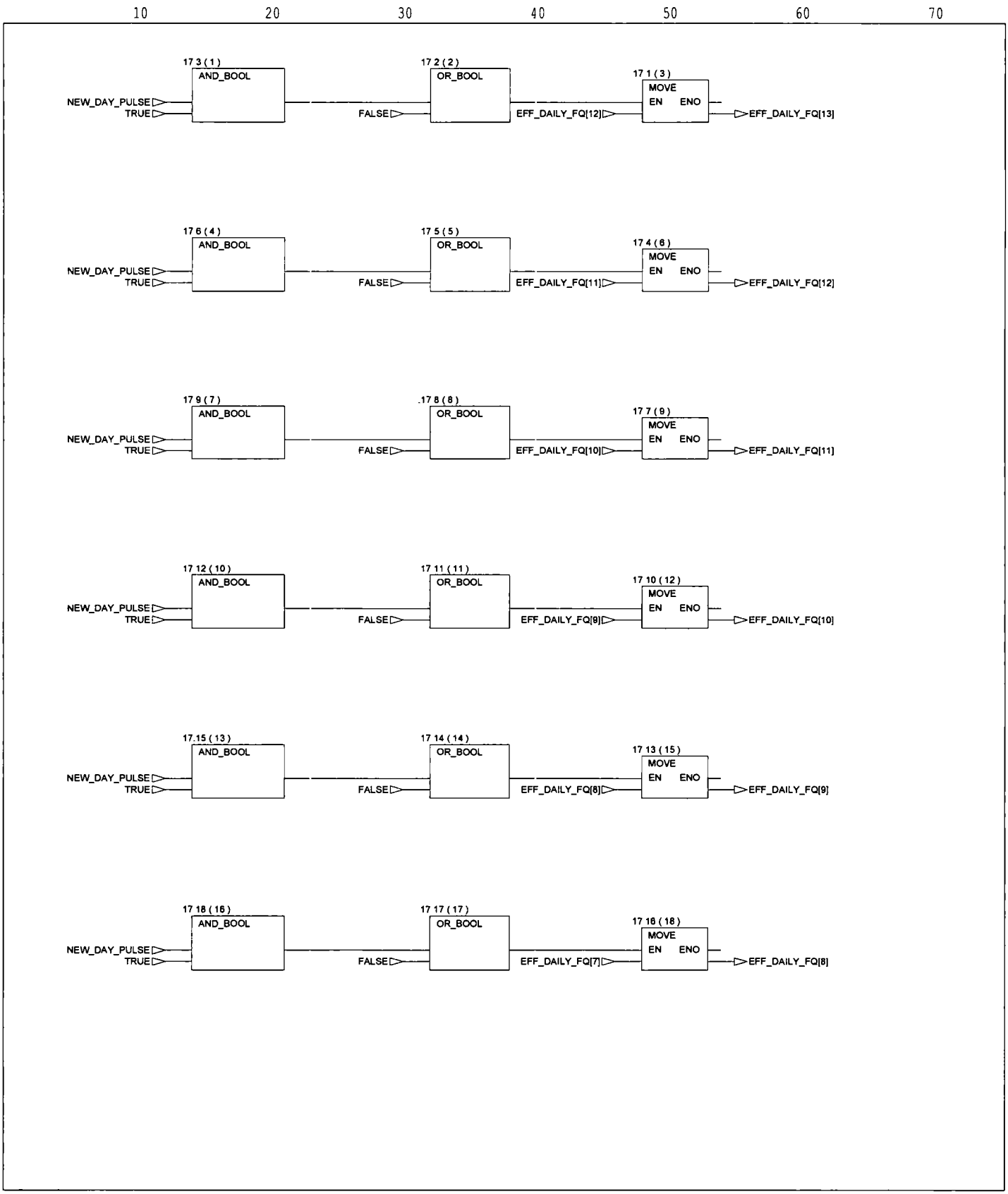

Graph of section DAILY_FLOW_TOTAL_STORAGE_03

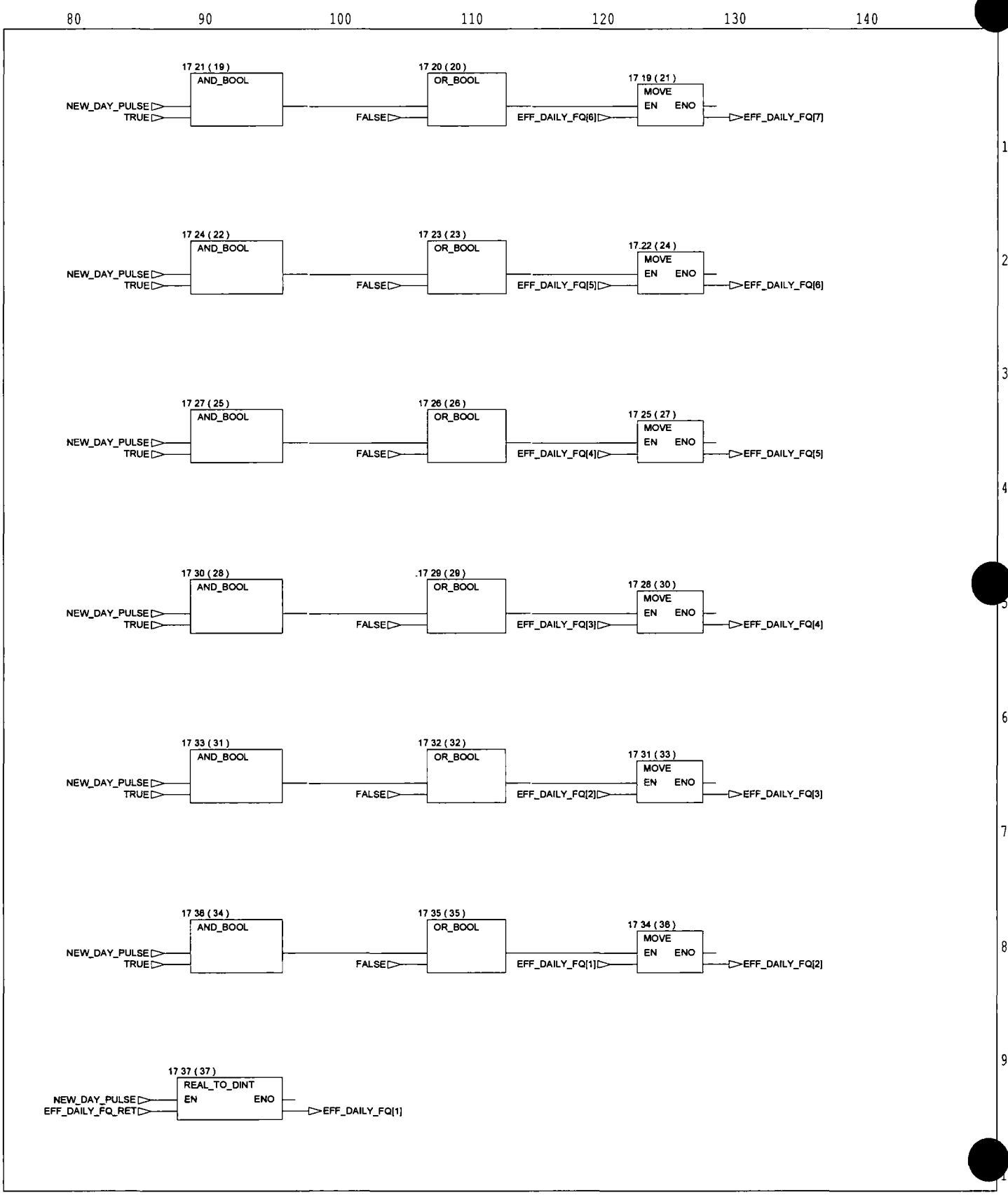

Graph of section AD_ALARMS

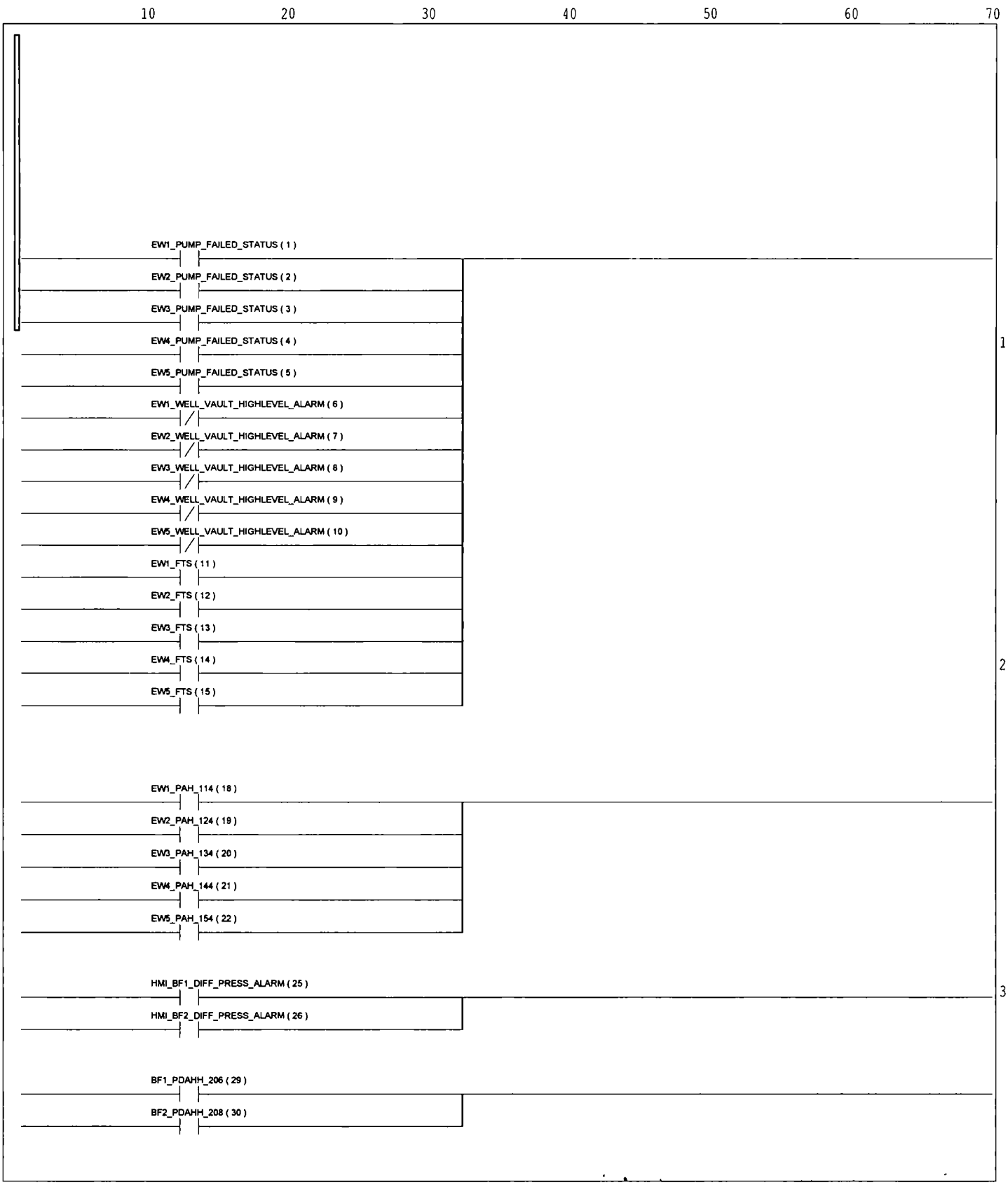

> page 117

Graph of section AD_ALARMS

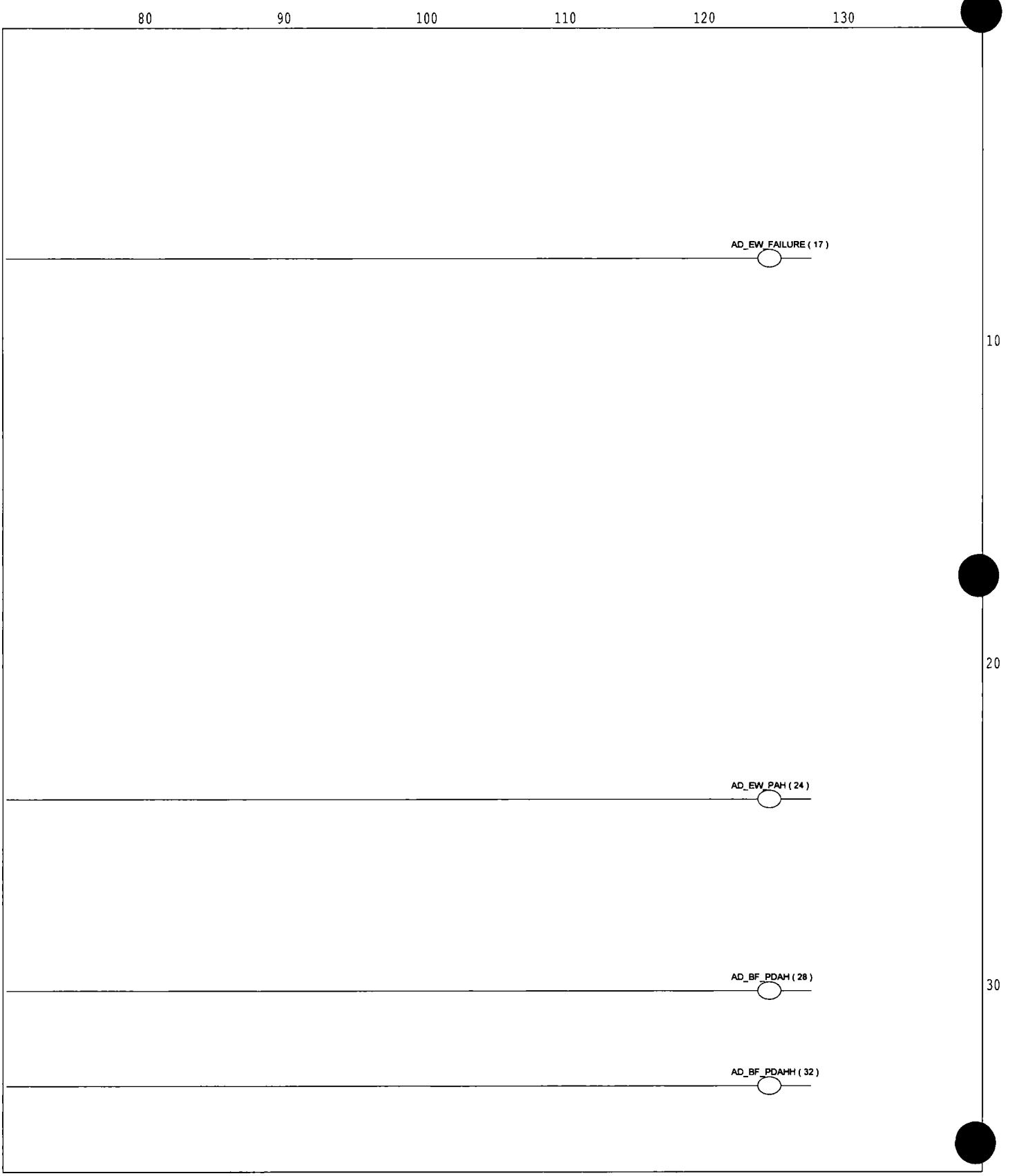

< page 115

> page 118

Graph of section AD_ALARMS

< page 115

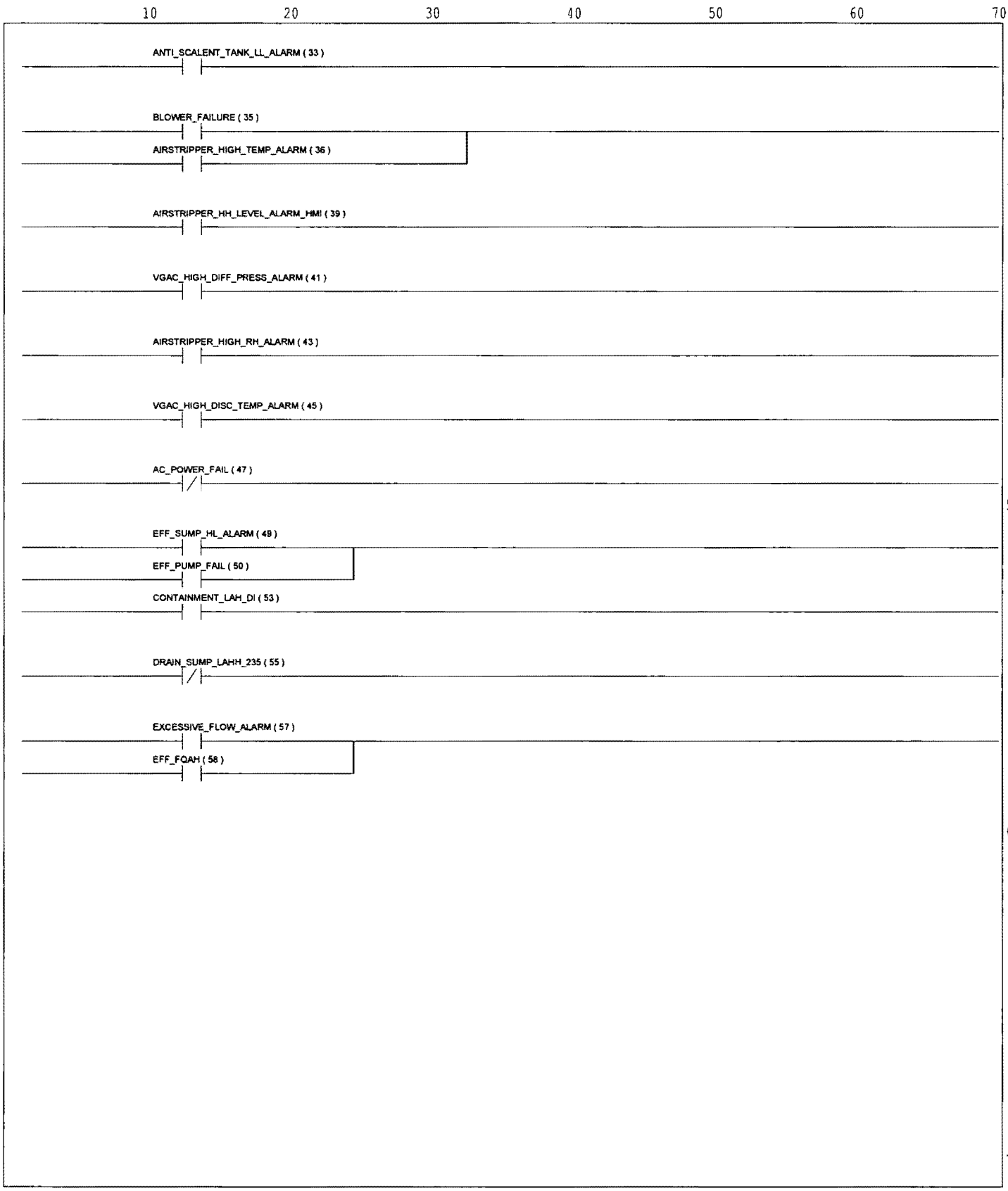

> page 118

Graph of section AD_ALARMS

< page 116

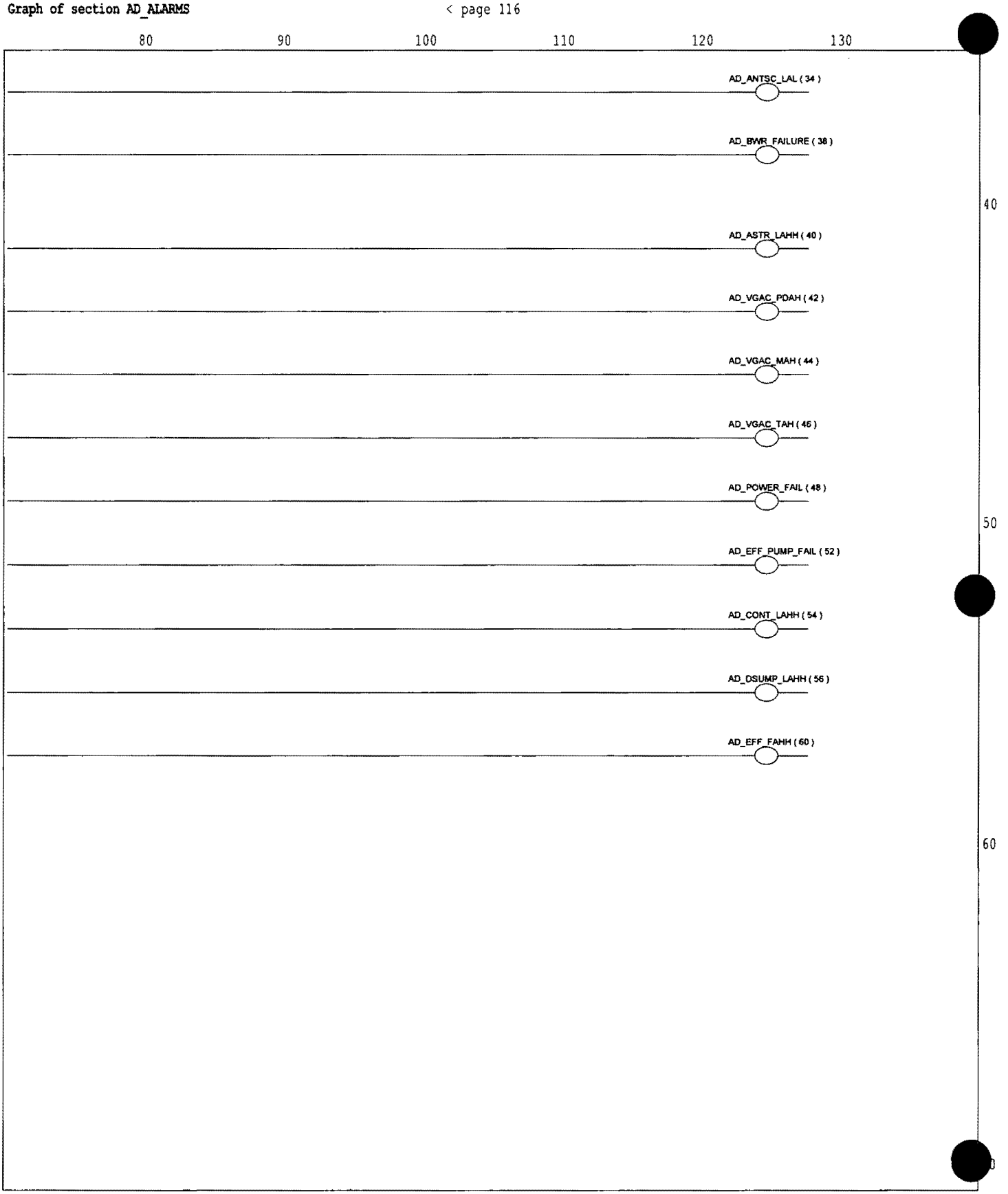

< page 117

Graph of section AIR_STRIPPER

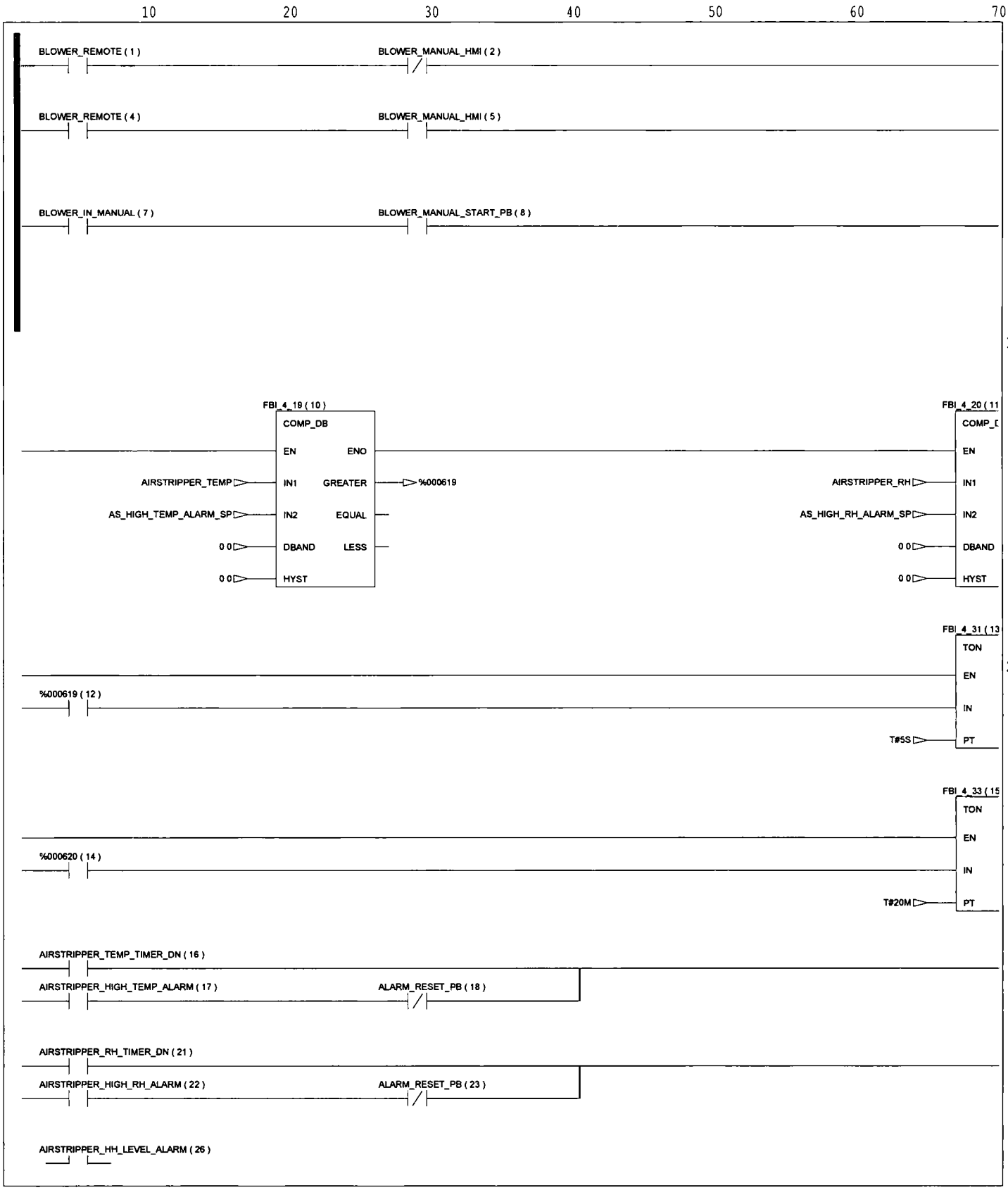

> page 121

Graph of section AIR_STRIPPER

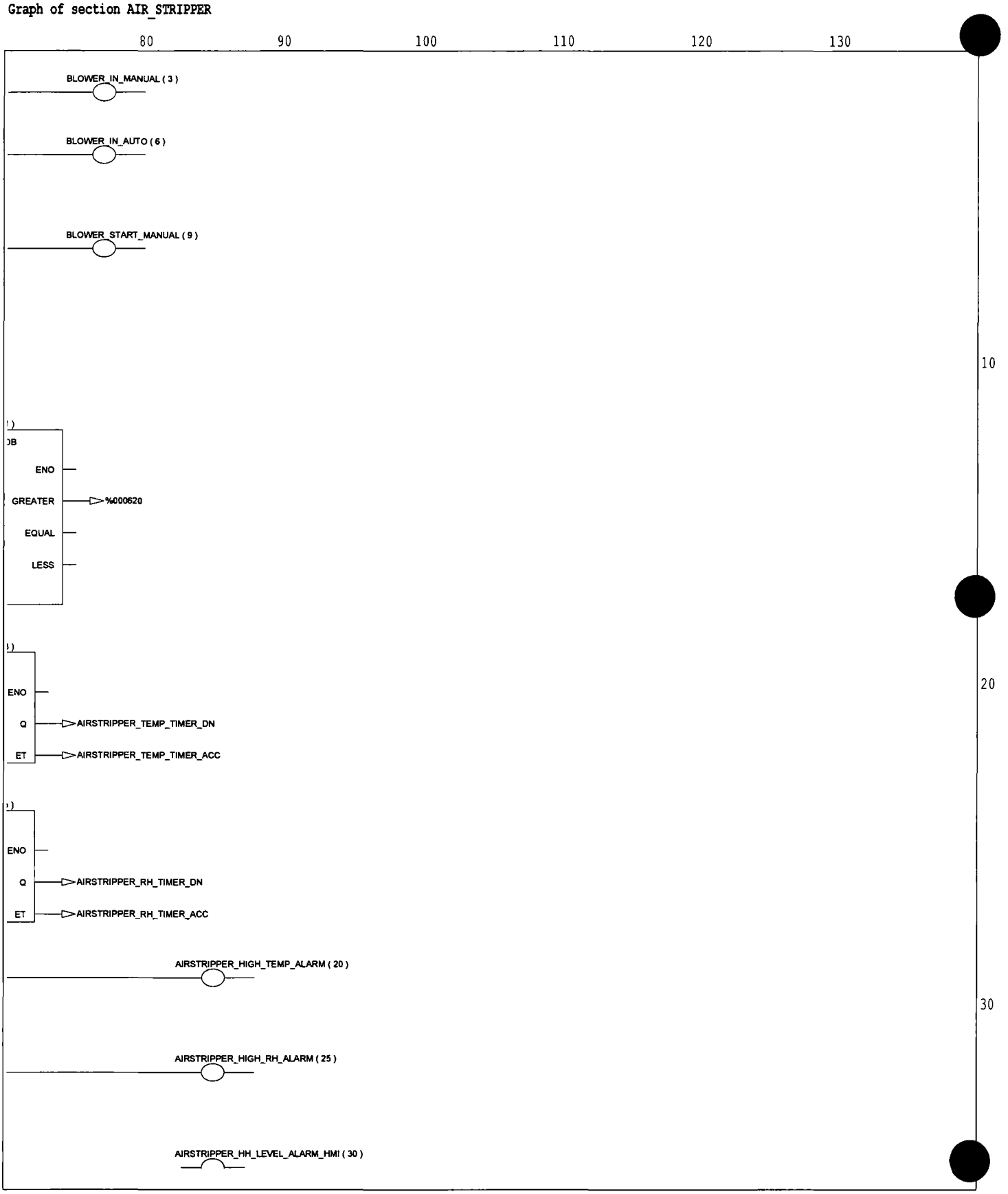

< page 119

> page 122

Graph of section AIR_STRIPPER

< page 119

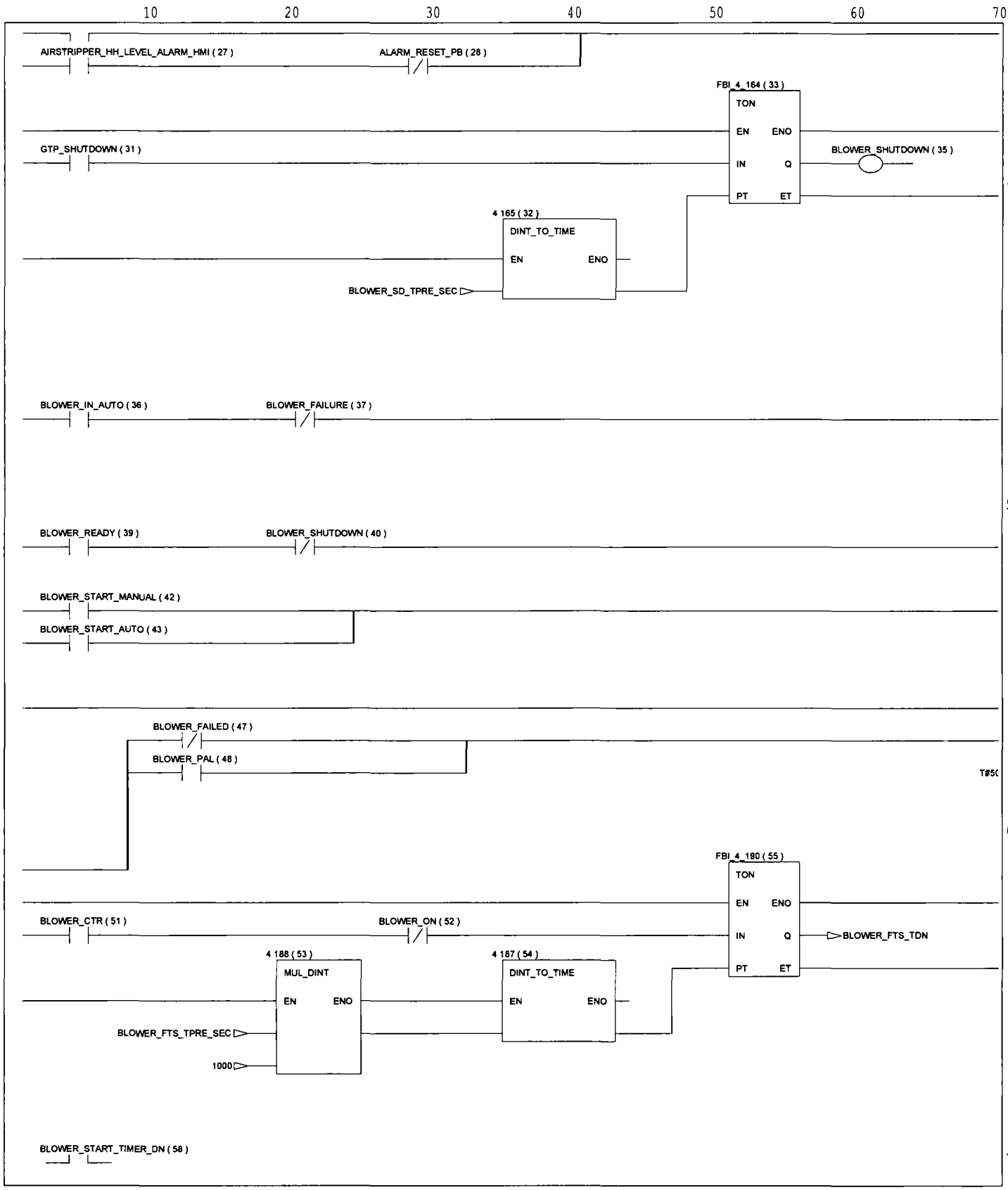

> page 123

Graph of section AIR_STRIPPER

< page 120

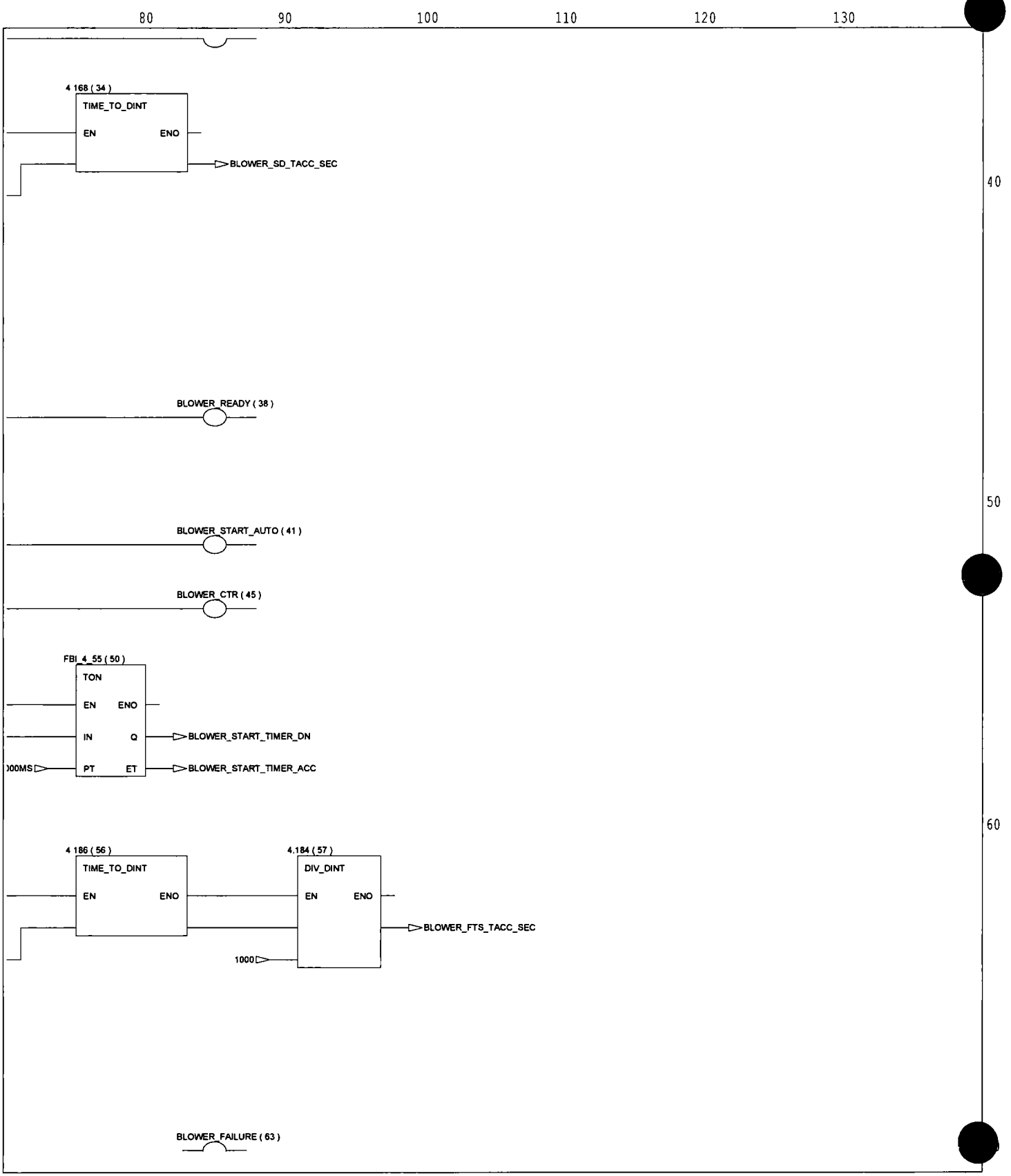

< page 121

> page 124

Graph of section AIR_STRIPPER

< page 121

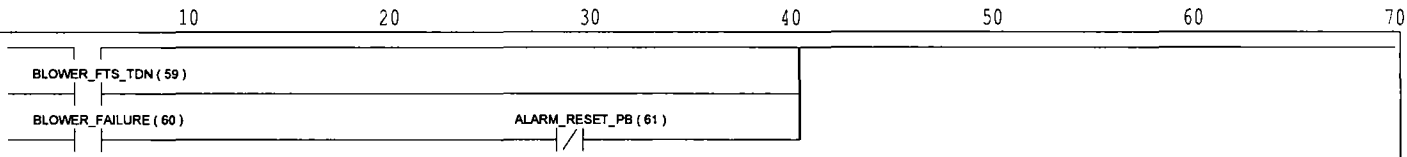

80

90

100

> page 124

Graph of section AIR_STRIPPER

< page 122

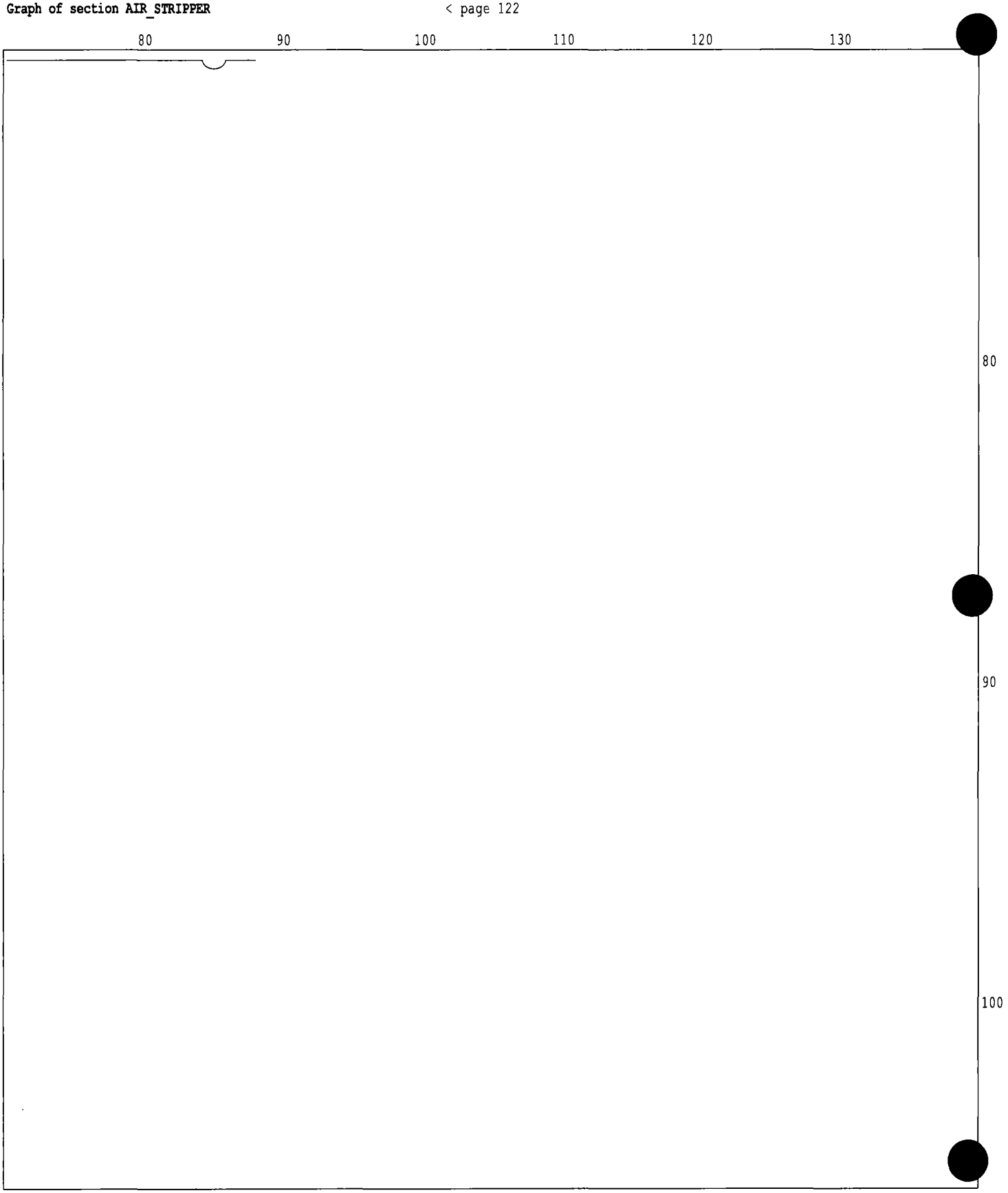

< page 123

Graph of section ANALOG

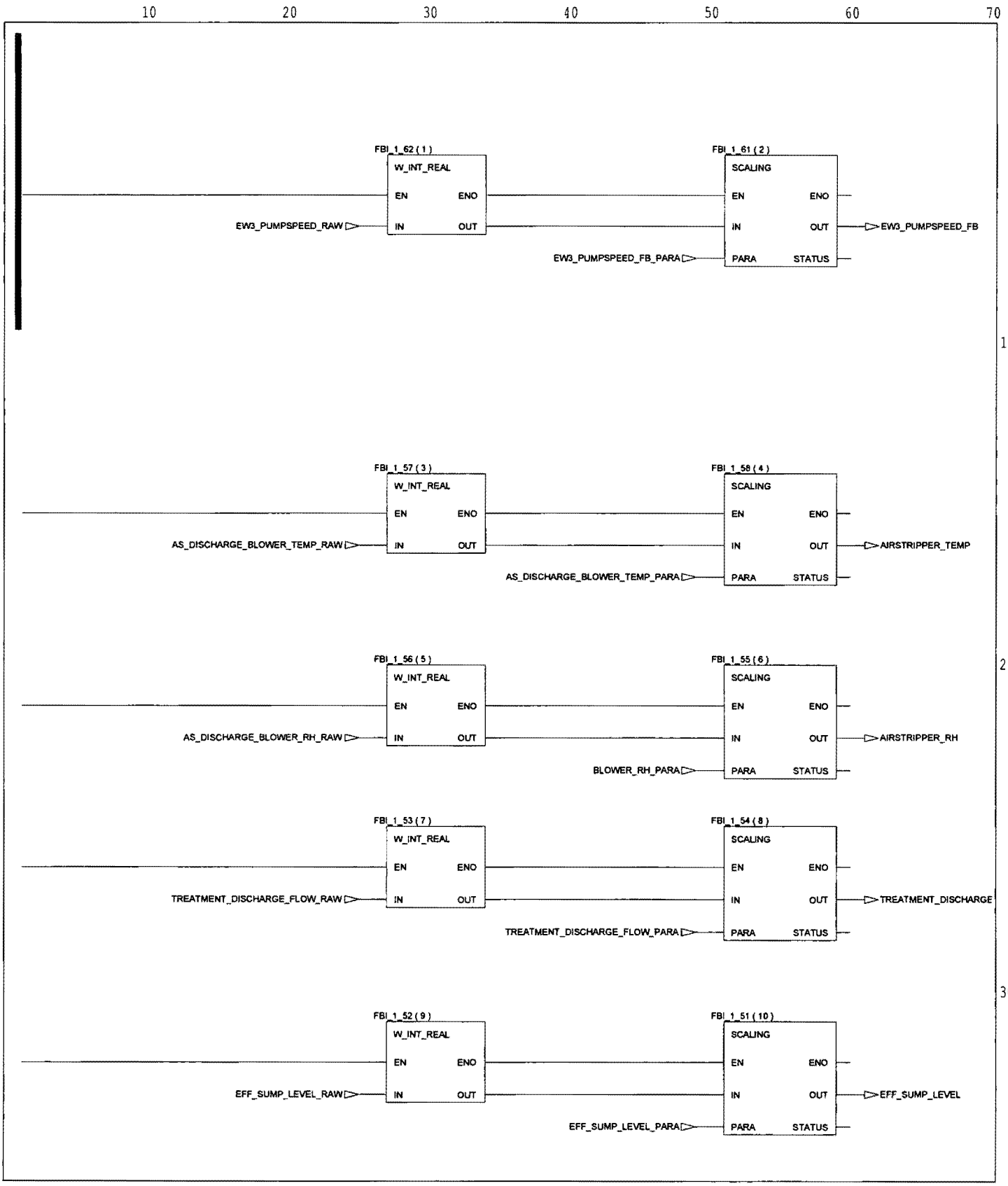

> page 127

Graph of section ANALOG

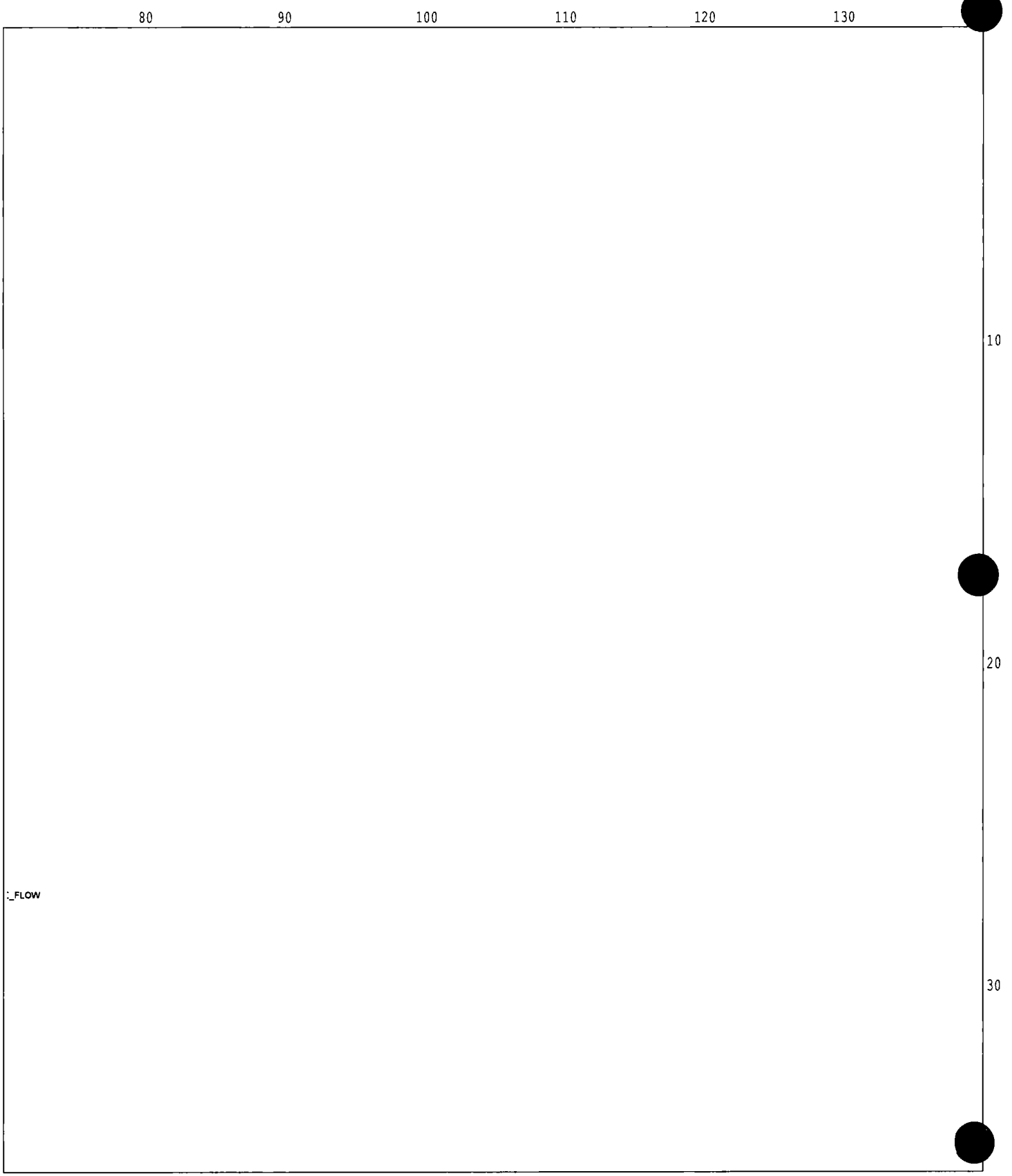

< page 125

> page 128

Graph of section ANALOG

< page 125

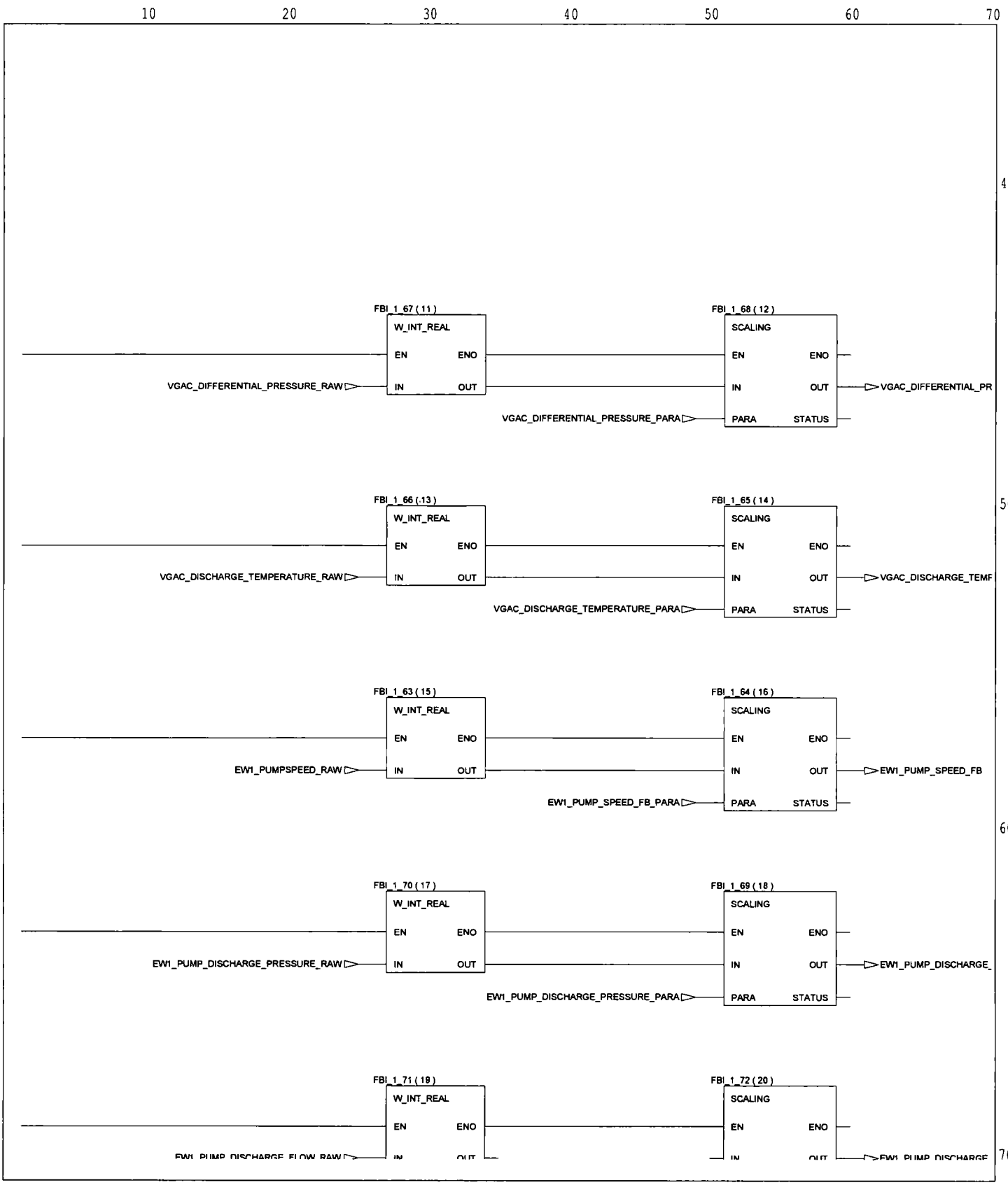

> page 129

Graph of section ANALOG

< page 126

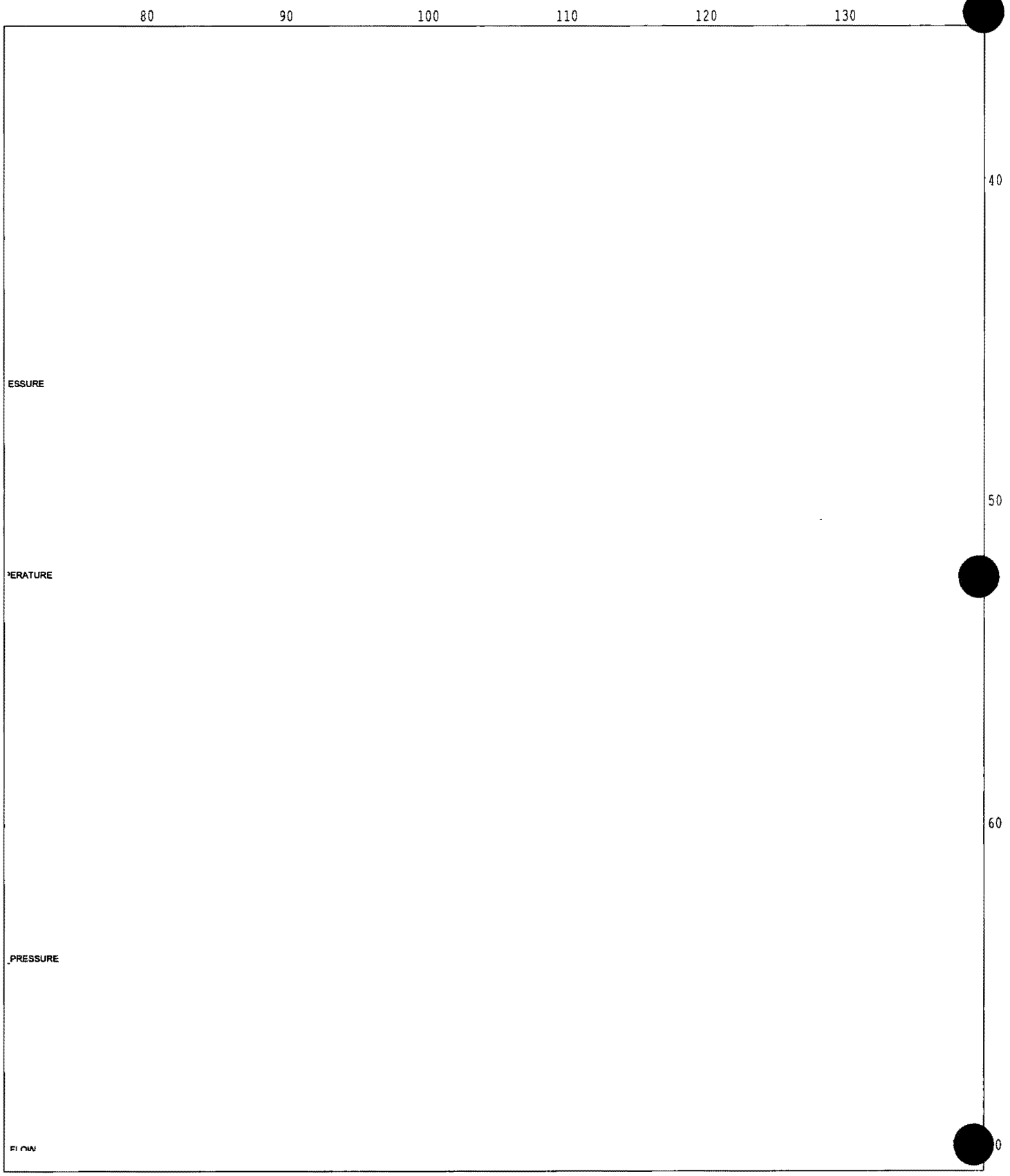

< page 127

> page 130

Graph of section ANALOG

< page 127

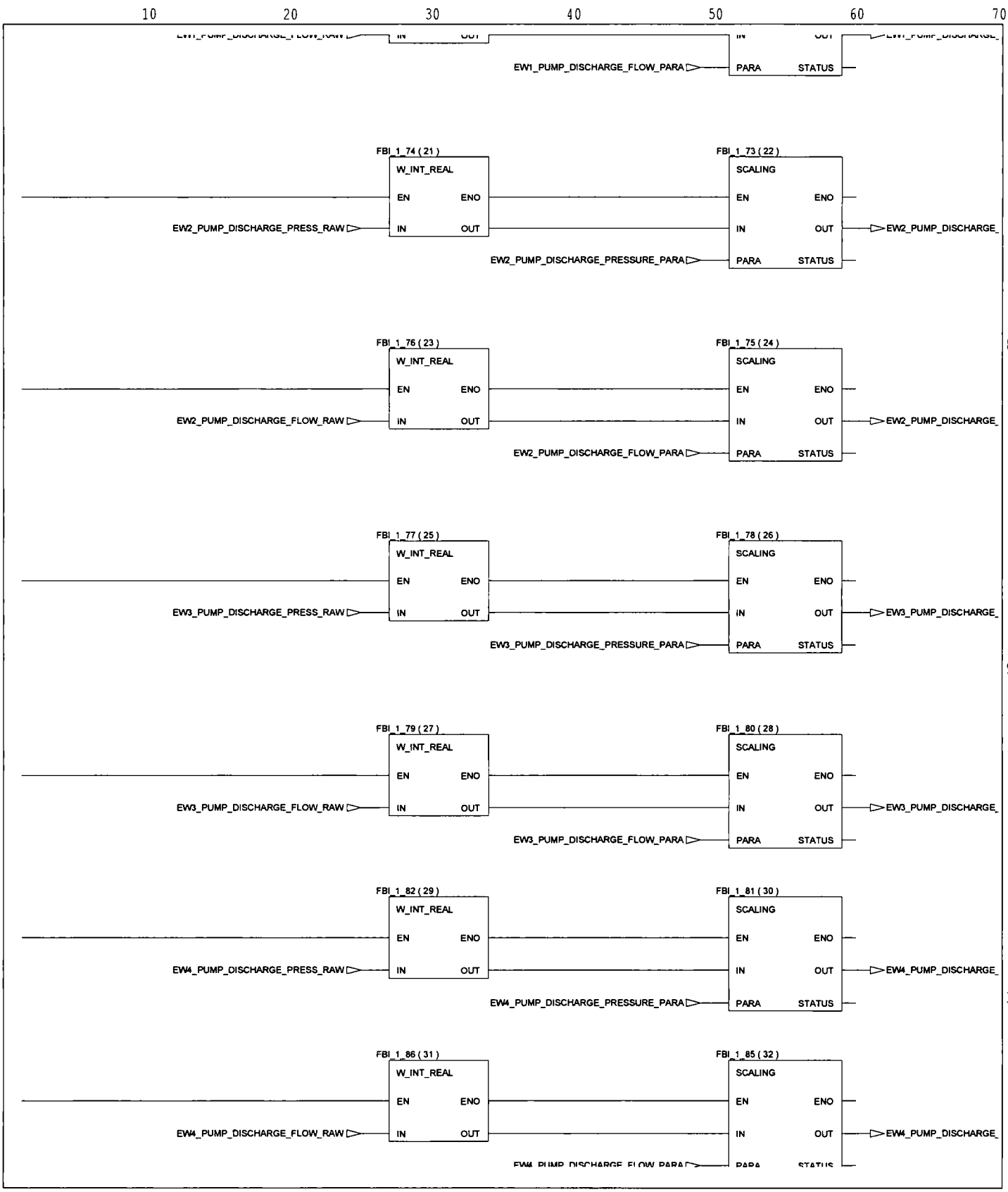

> page 131

Graph of section ANALOG

< page 128

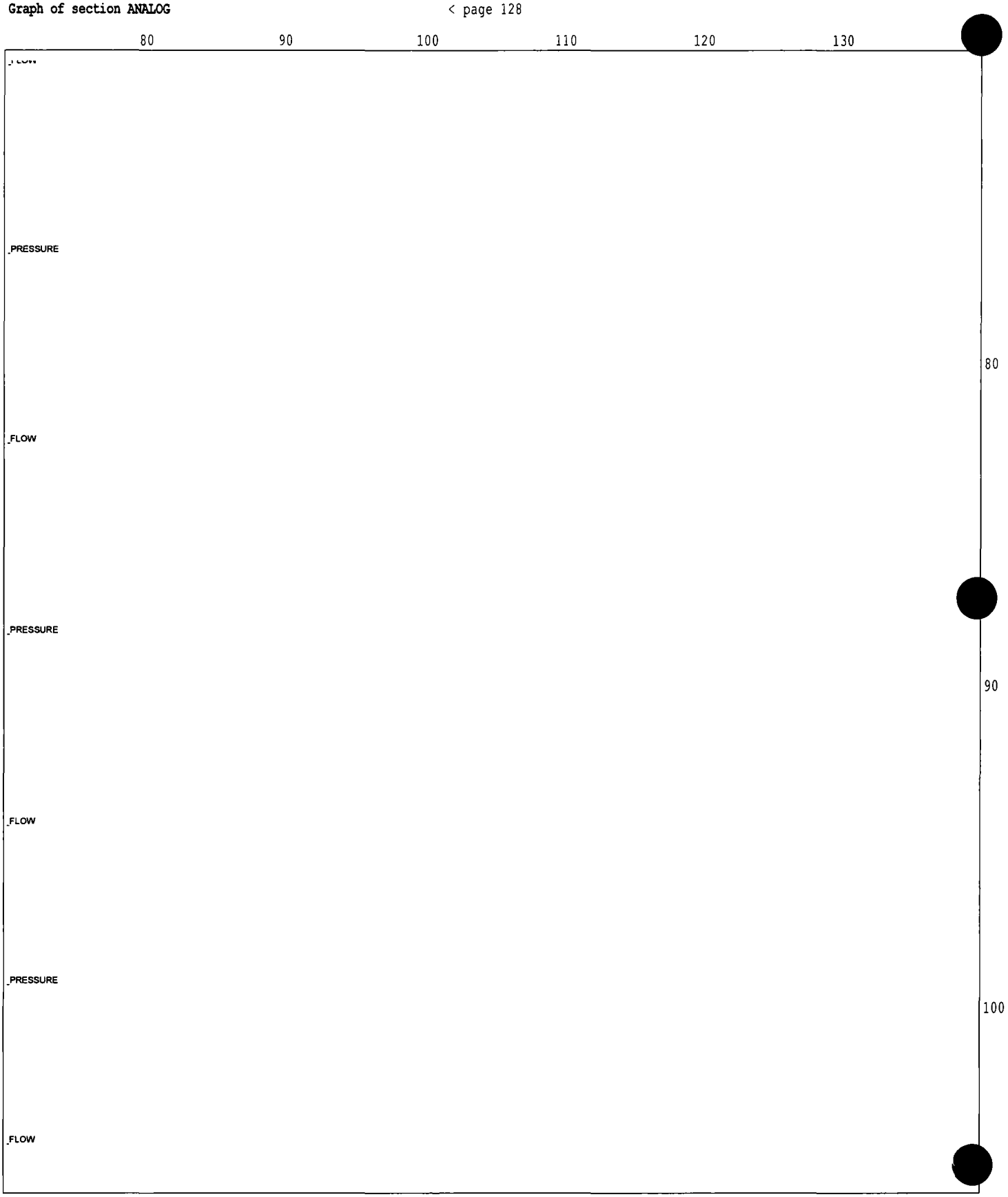

< page 129

> page 132

Graph of section ANALOG

< page 129

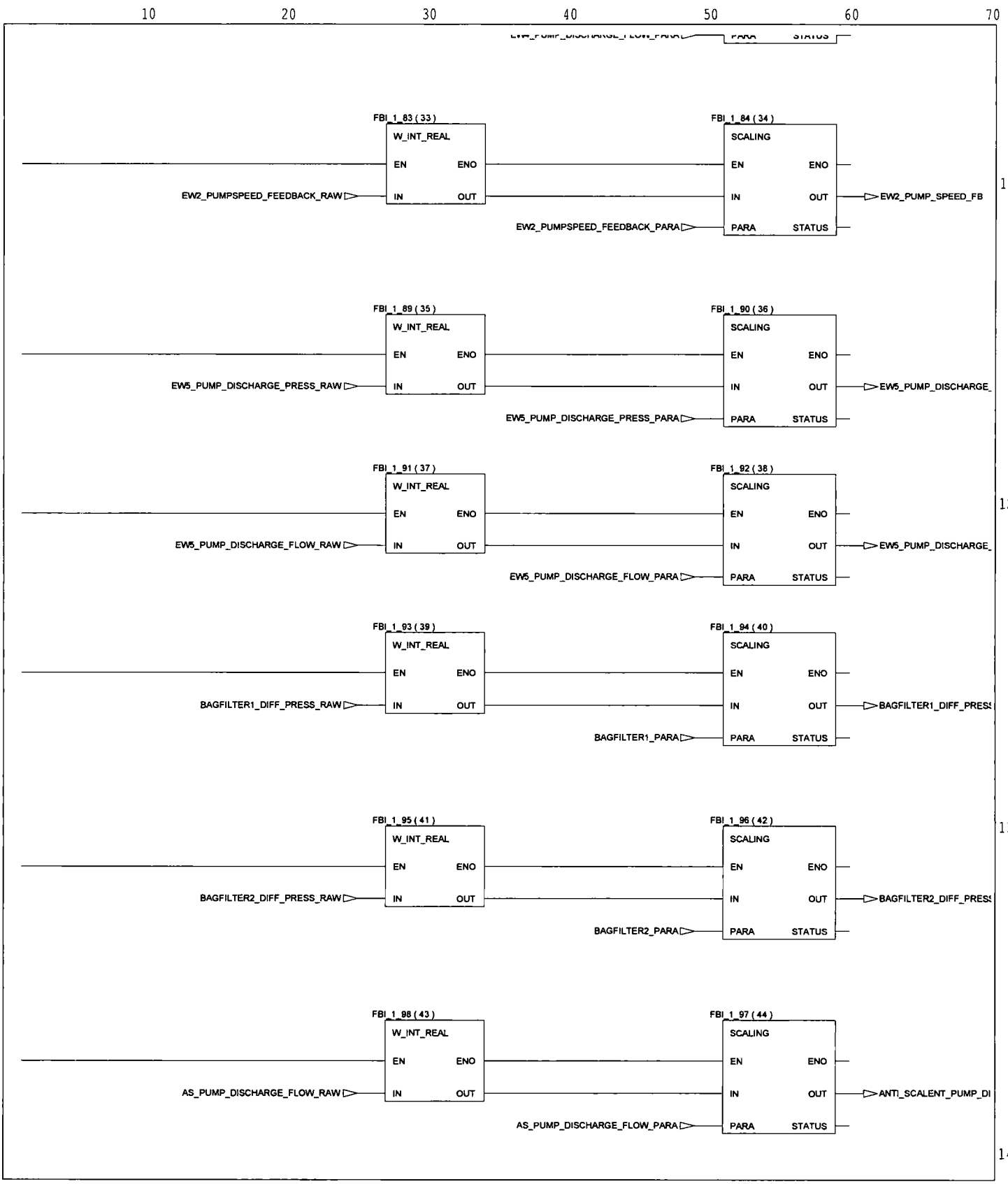

> page 133

Graph of section ANALOG

< page 130

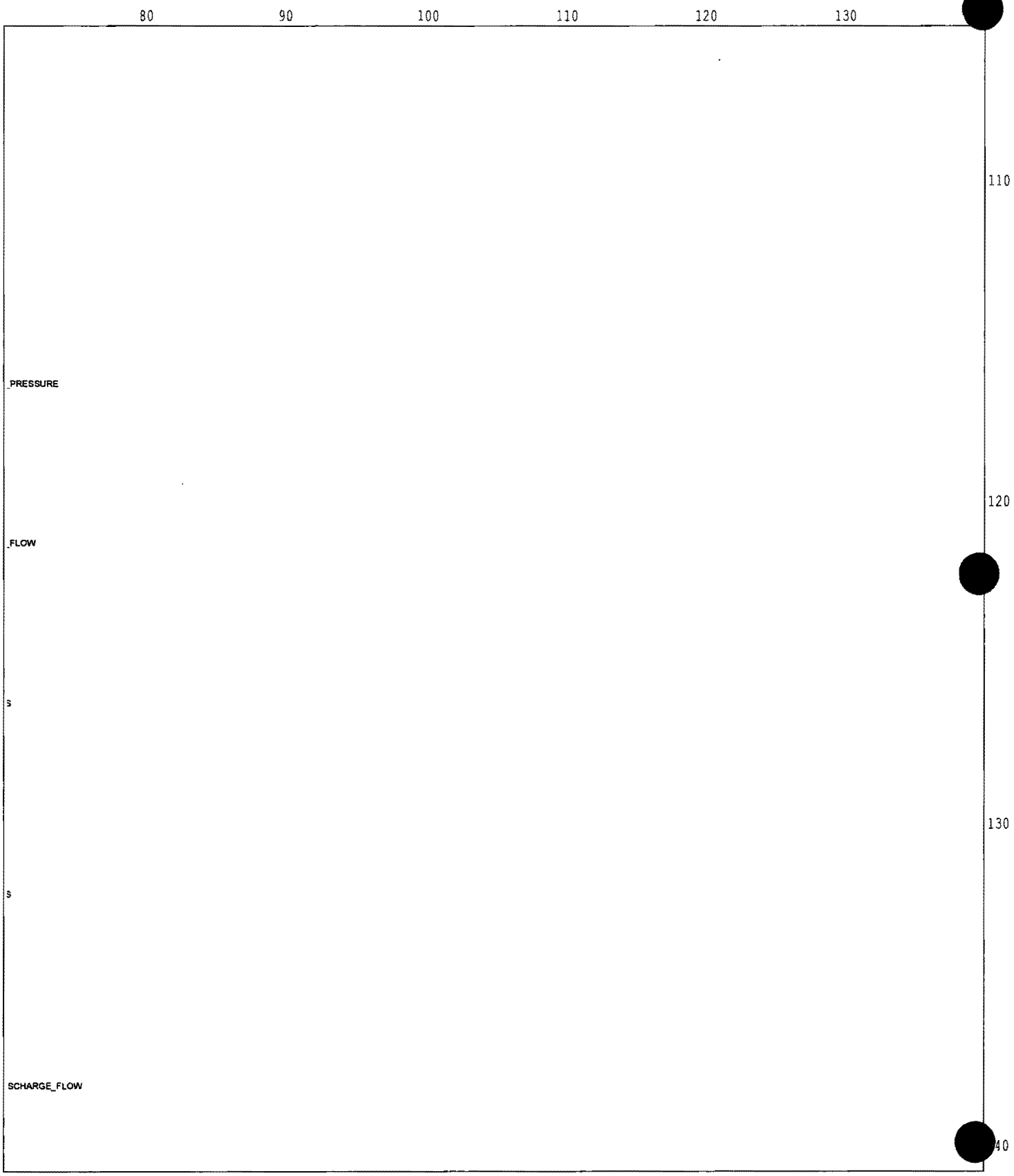

< page 131

> page 134

Graph of section ANALOG

< page 131

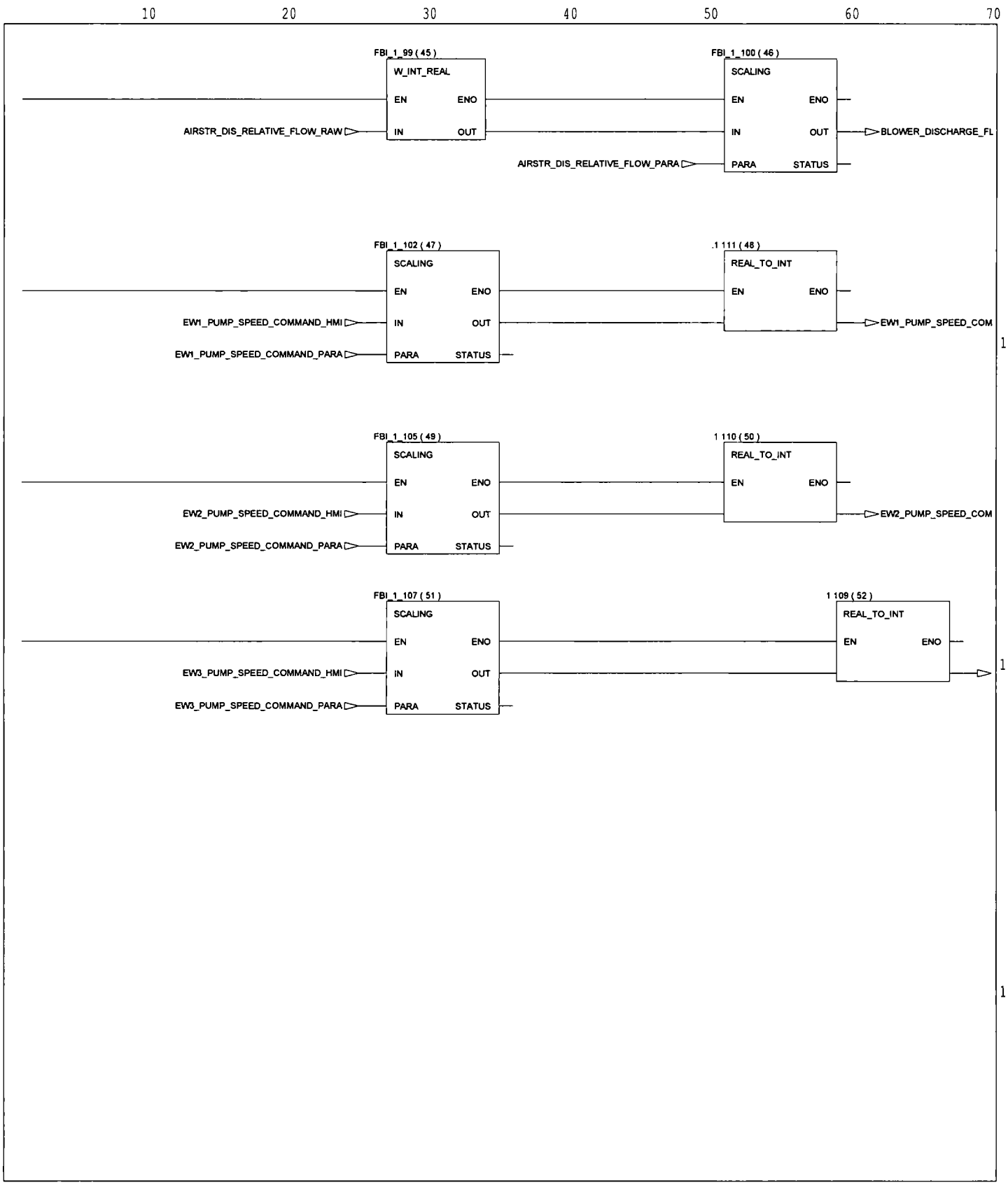

Graph of section ANALOG

< page 132

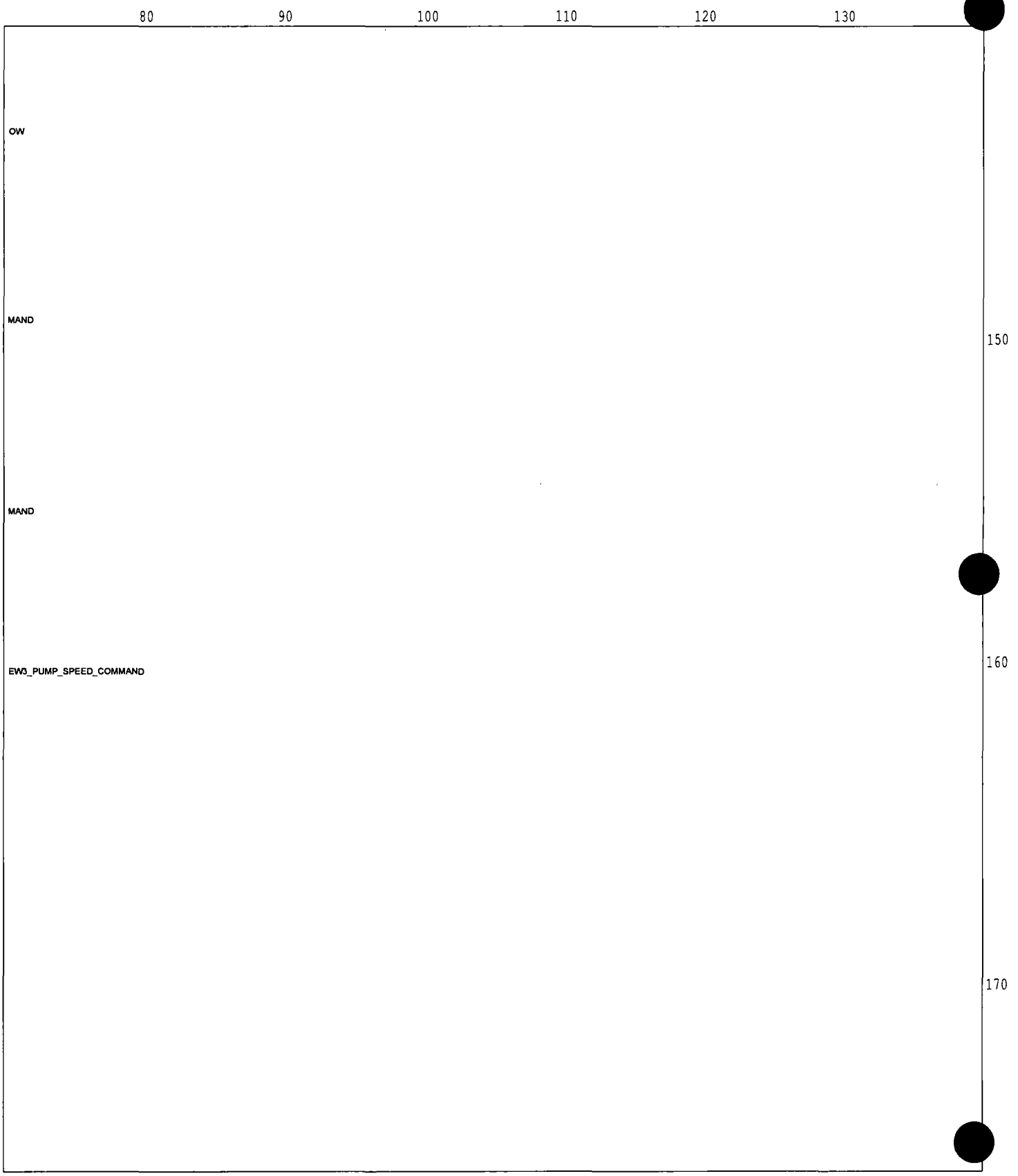

< page 133

Graph of section BAGFILTER_SCALENT_VGAC

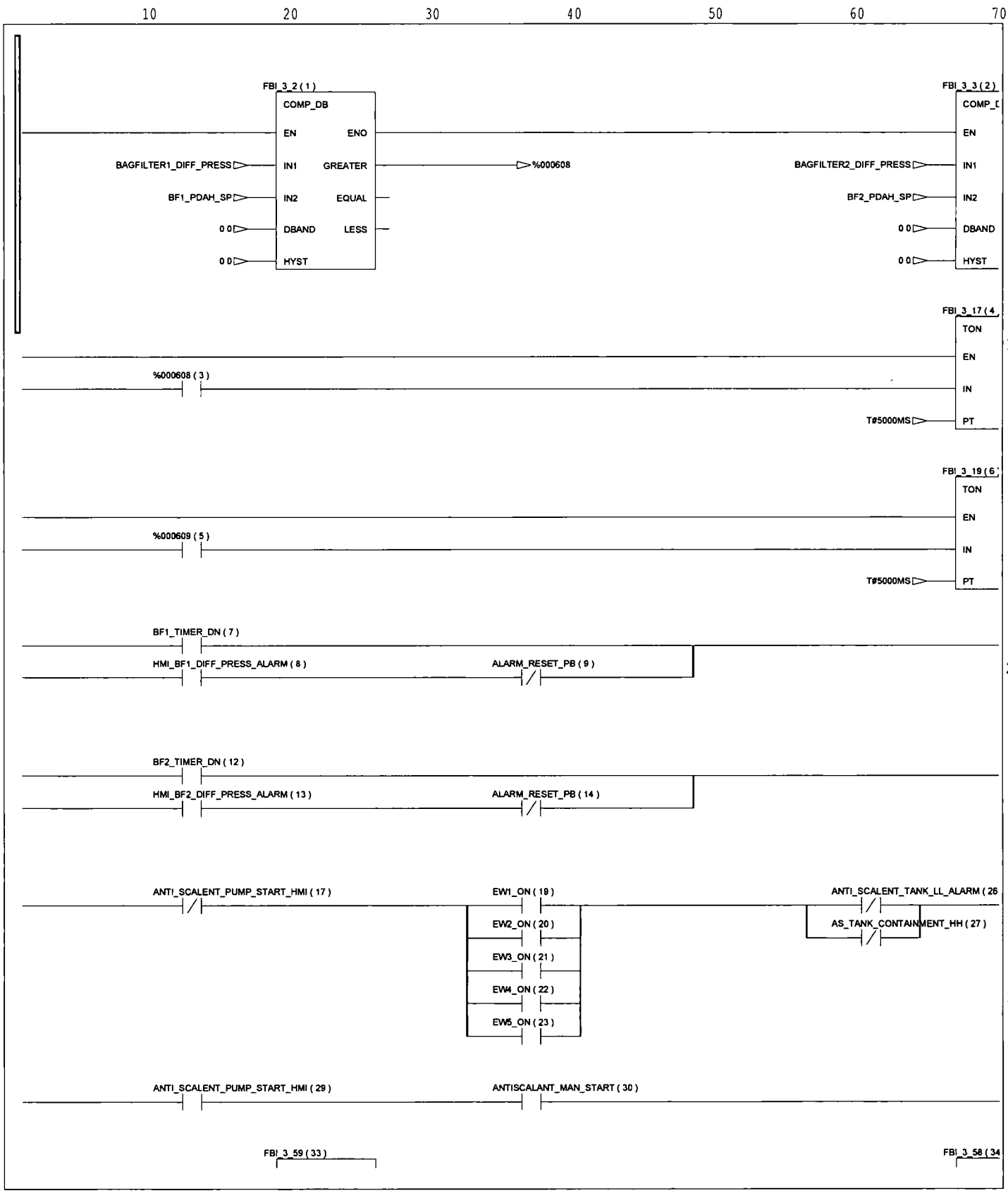

> page 137

Graph of section BAGFILTER_SCALENT_VGAC

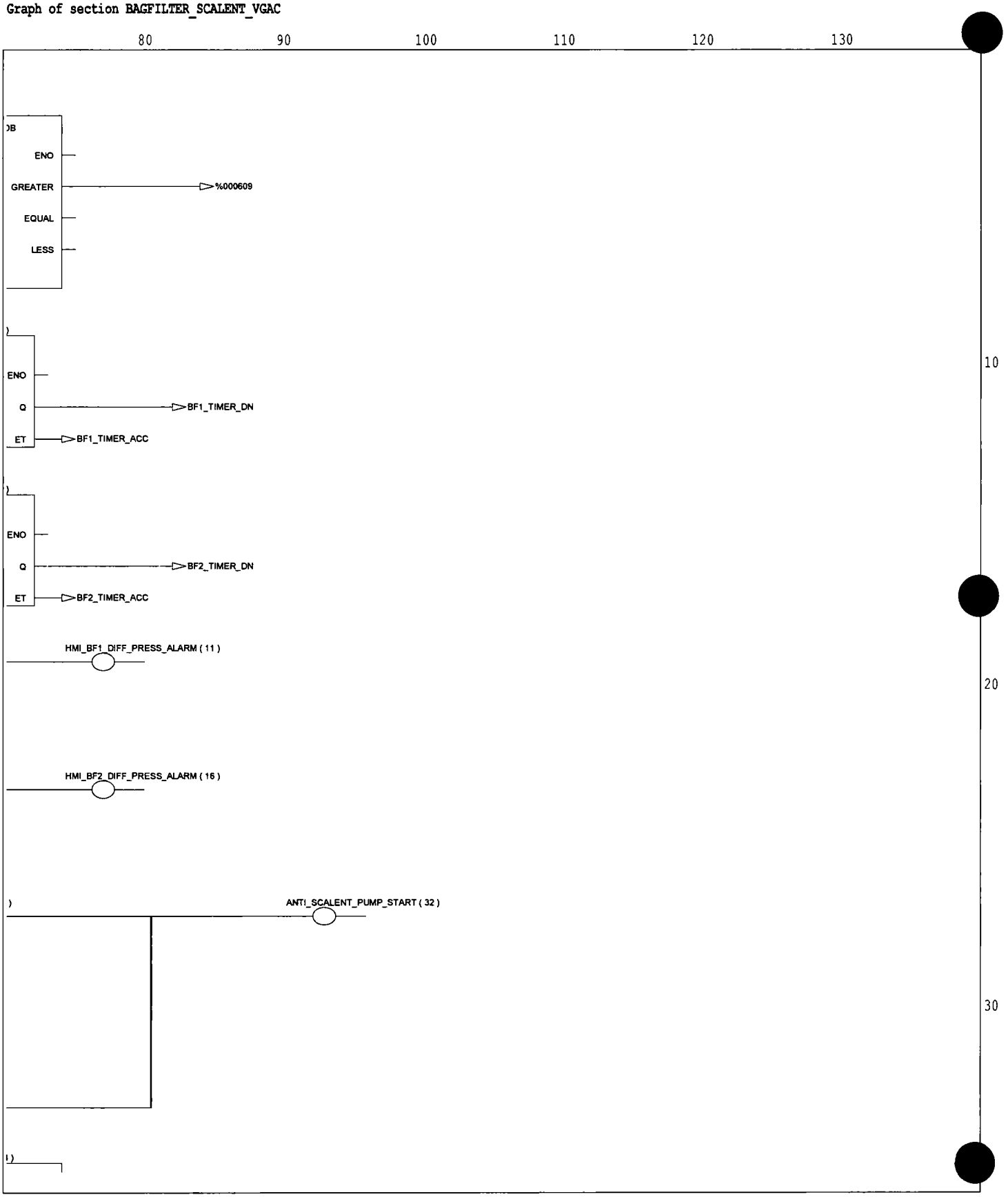

< page 135

> page 138

Graph of section BAGFILTER_SCALENT_VGAC < page 135

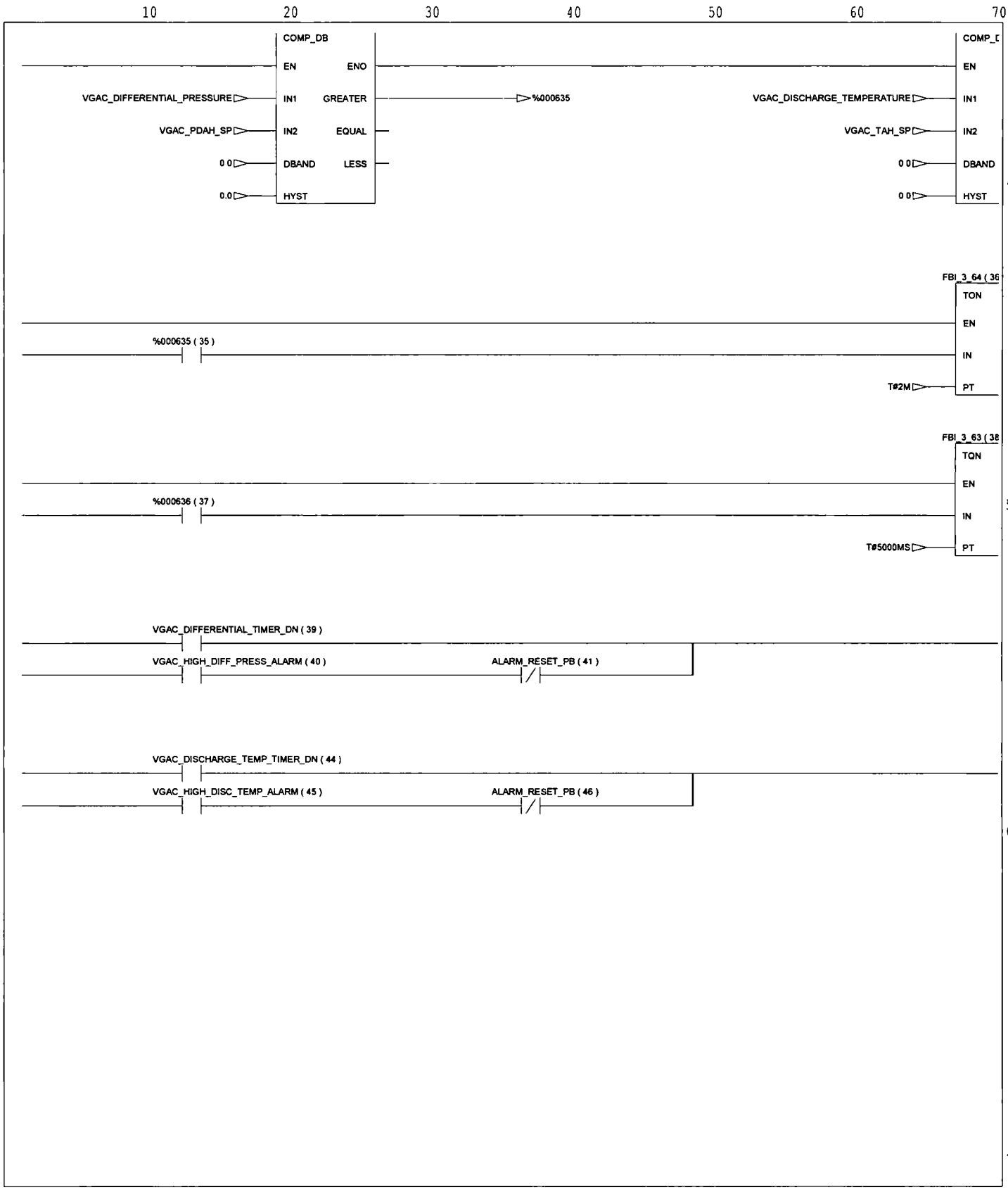

Graph of section BAGFILTER_SCALENT_VGAC

< page 136

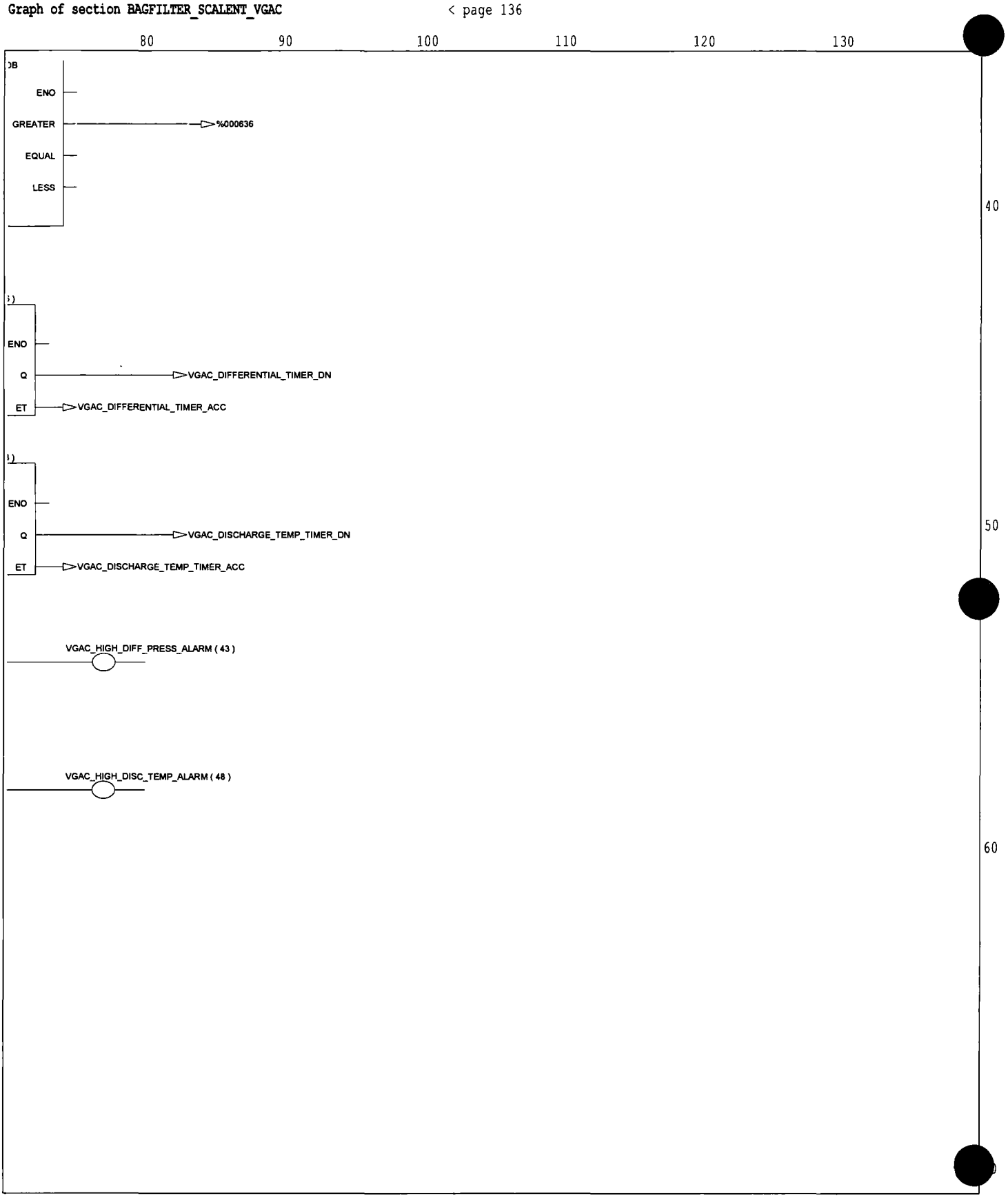

< page 137

Graph of section DISCHARGE_WETWELL_AND_PUMP

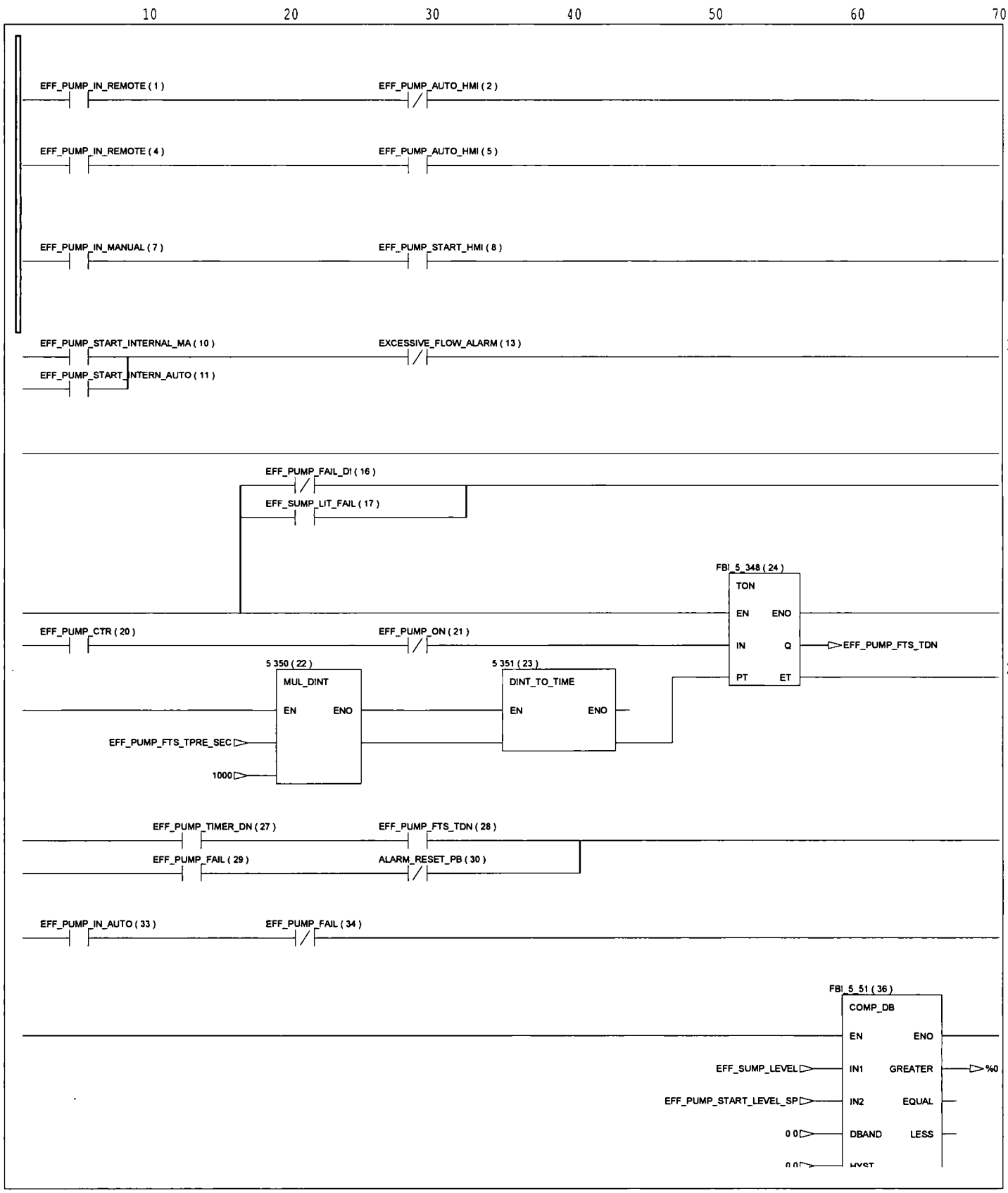

> page 141

Graph of section DISCHARGE_WETWELL_AND_PUMP

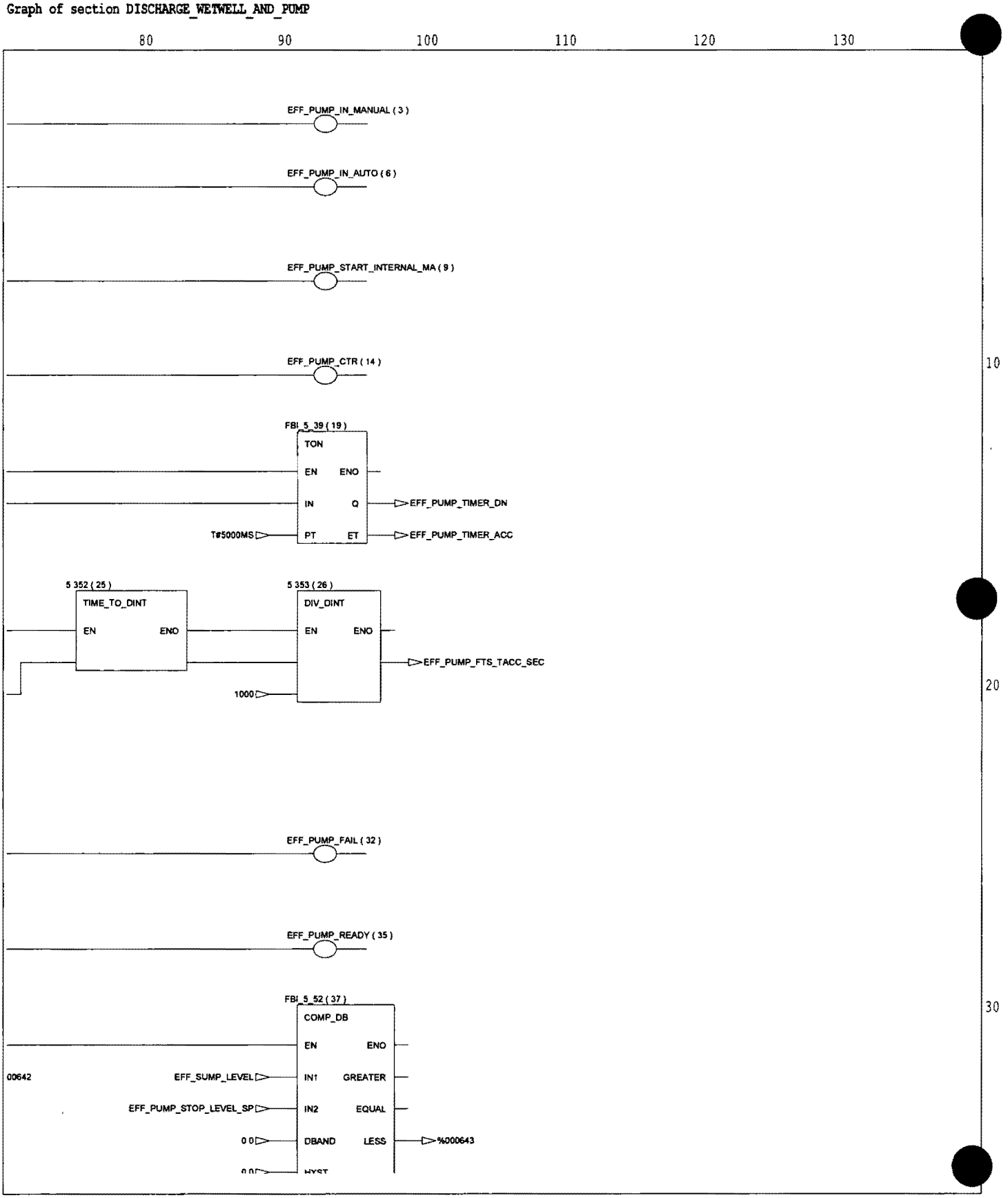

< page 139

> page 142

Graph of section DISCHARGE_WETWELL_AND_PUMP < page 139

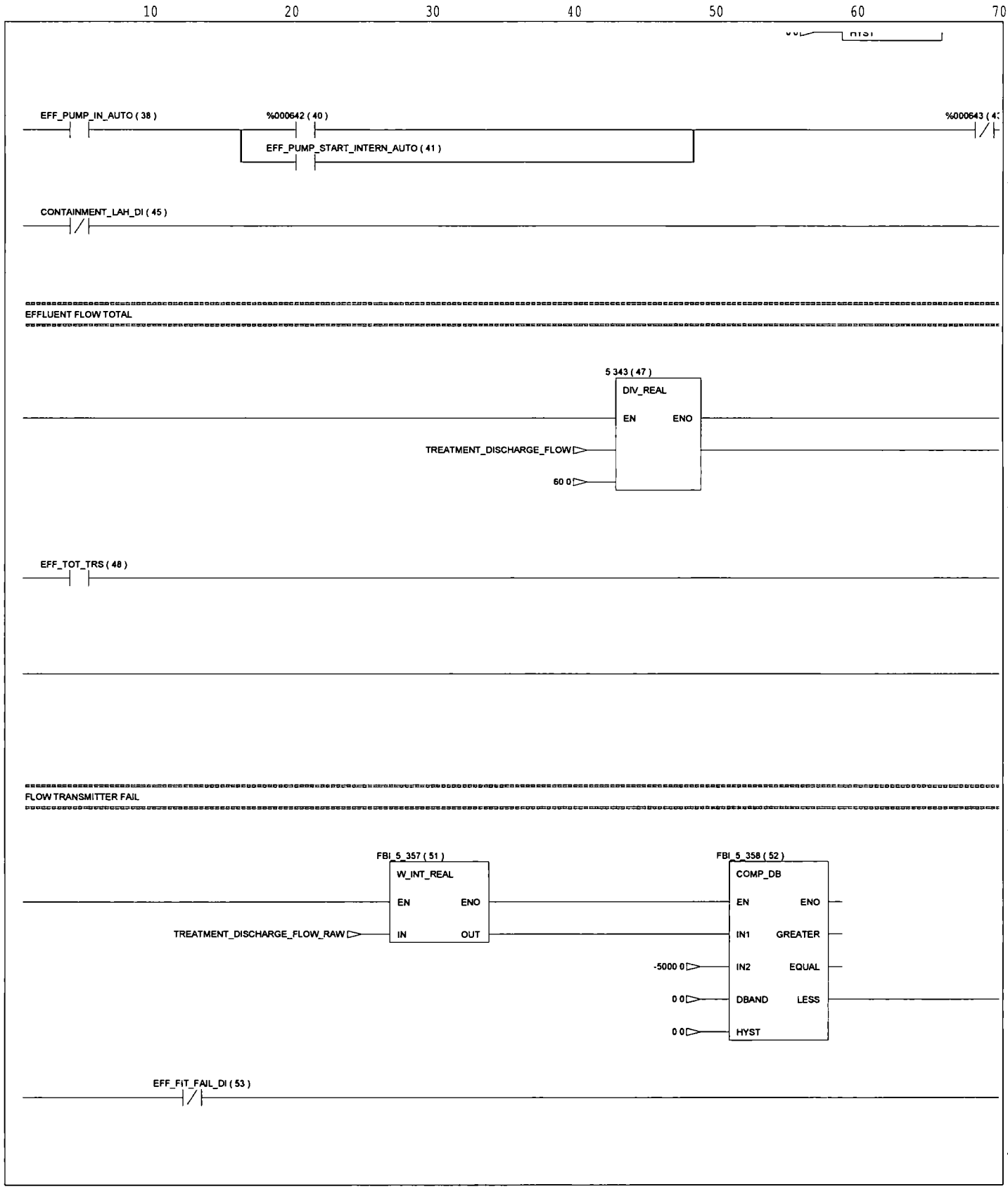

Graph of section DISCHARGE_WETWELL_AND_PUMP < page 140

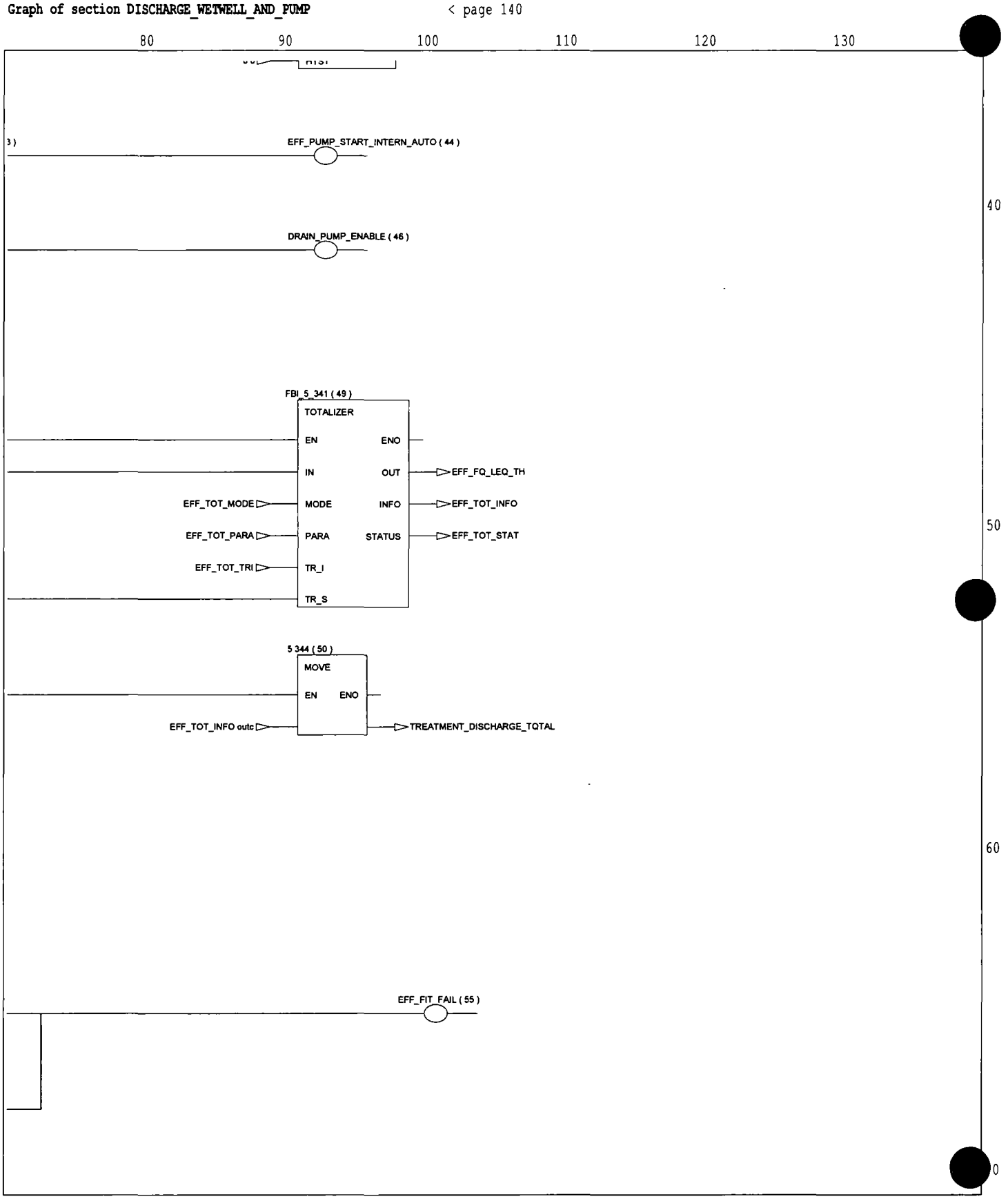

Graph of section EXTRACTION_WELLS

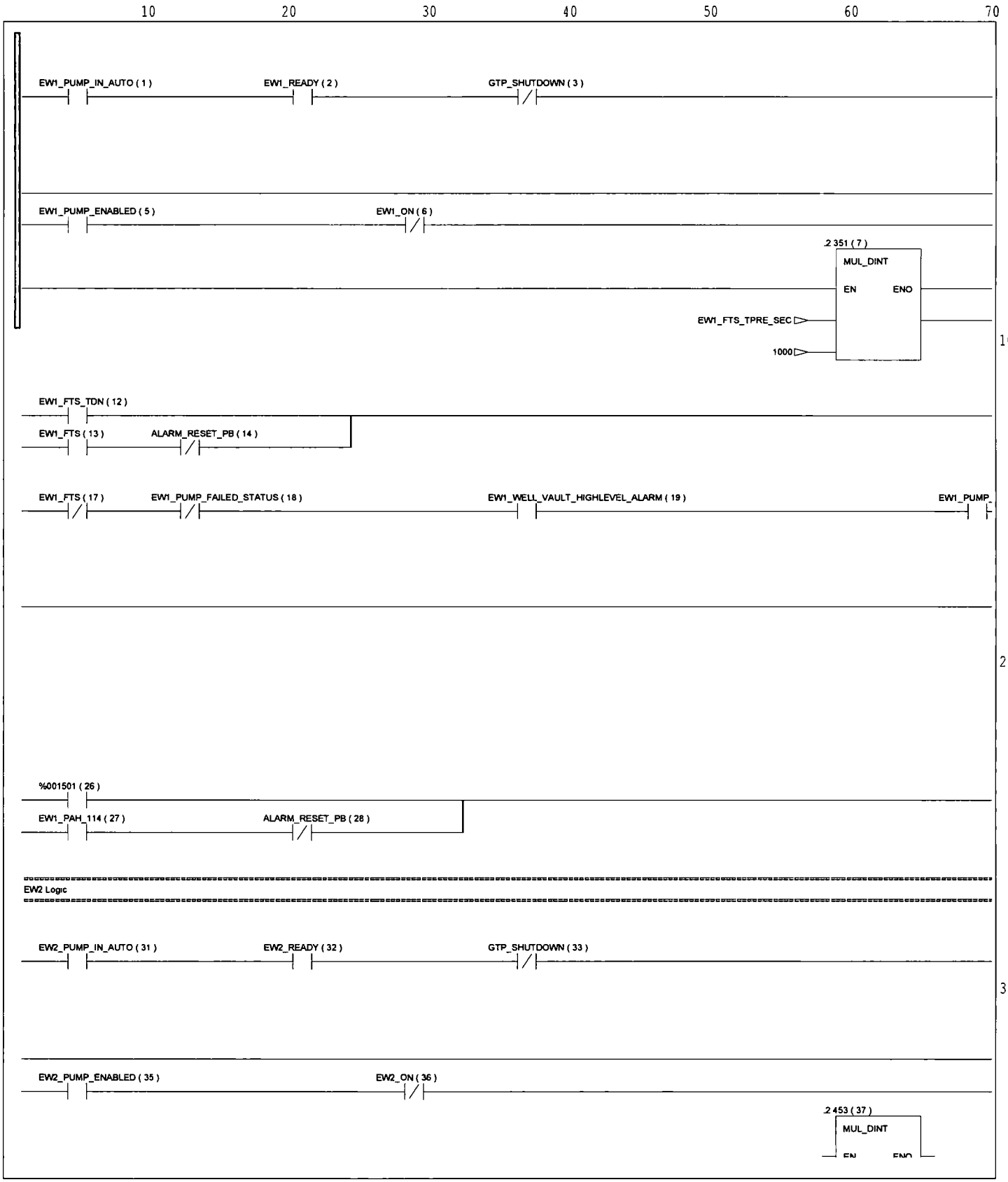

> page 146

Graph of section EXTRACTION_WELLS

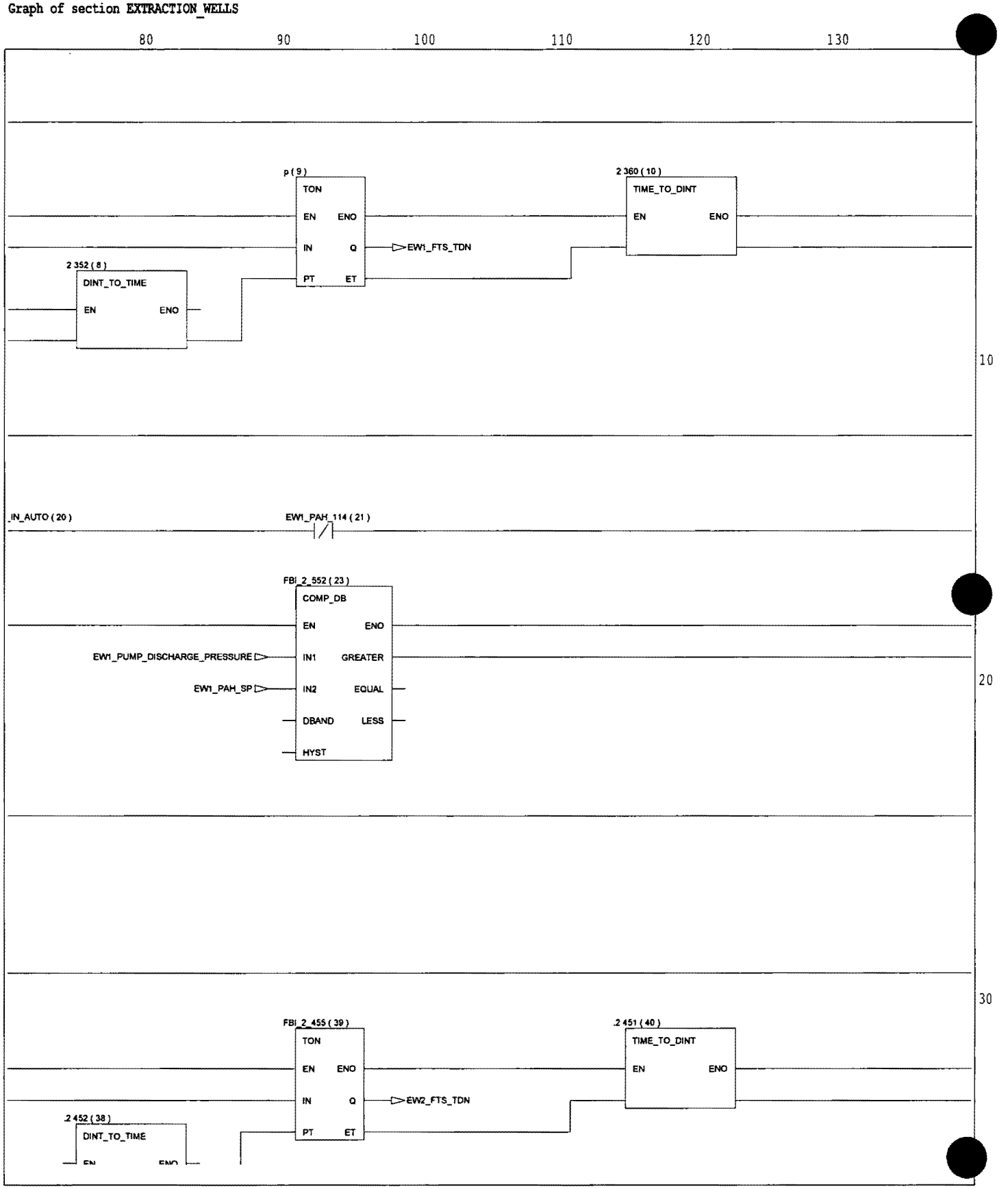

< page 143

> page 145

> page 147

Graph of section EXTRACTION_WELLS

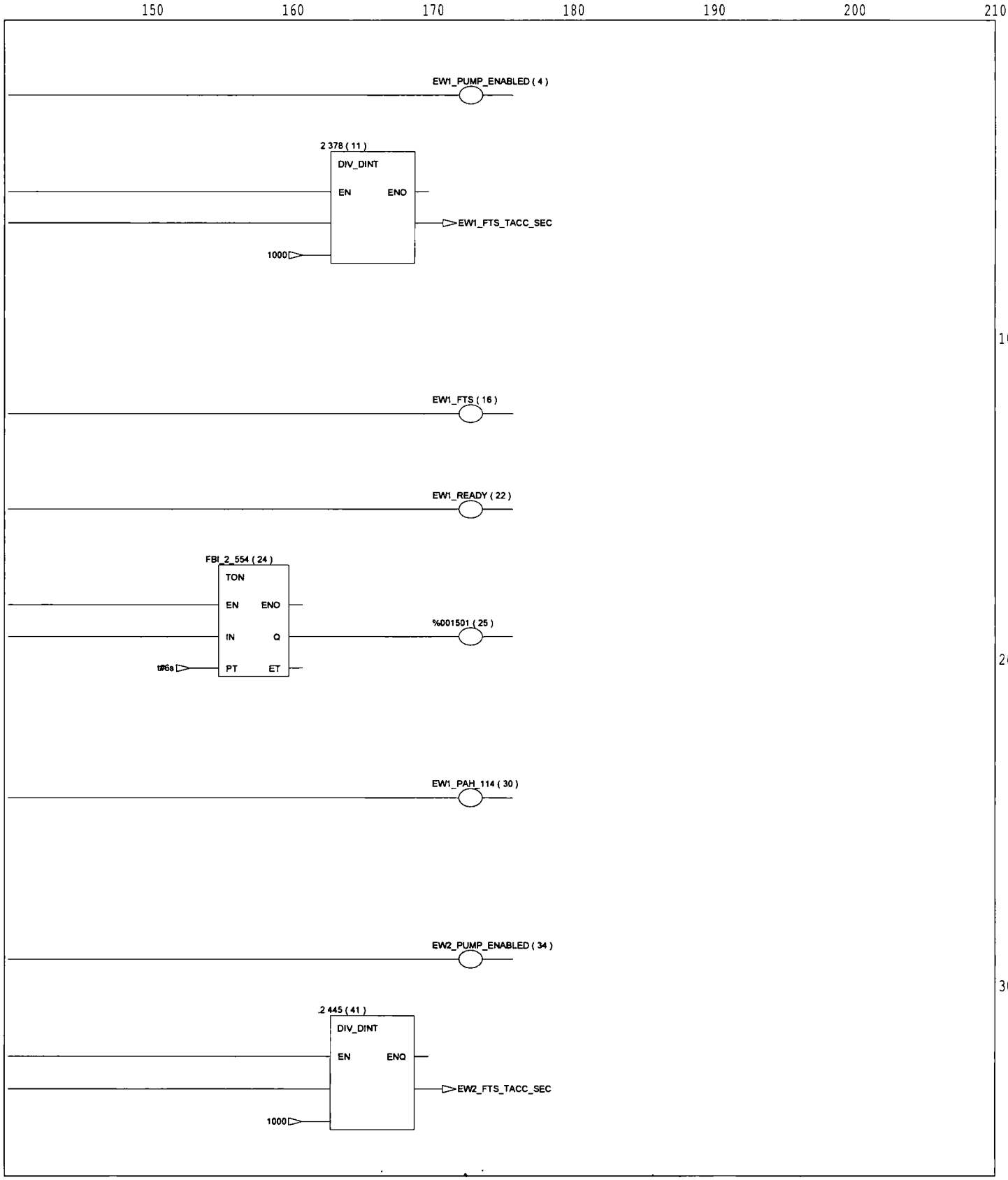

< page 144

> page 148

Graph of section EXTRACTION_WELLS

< page 143

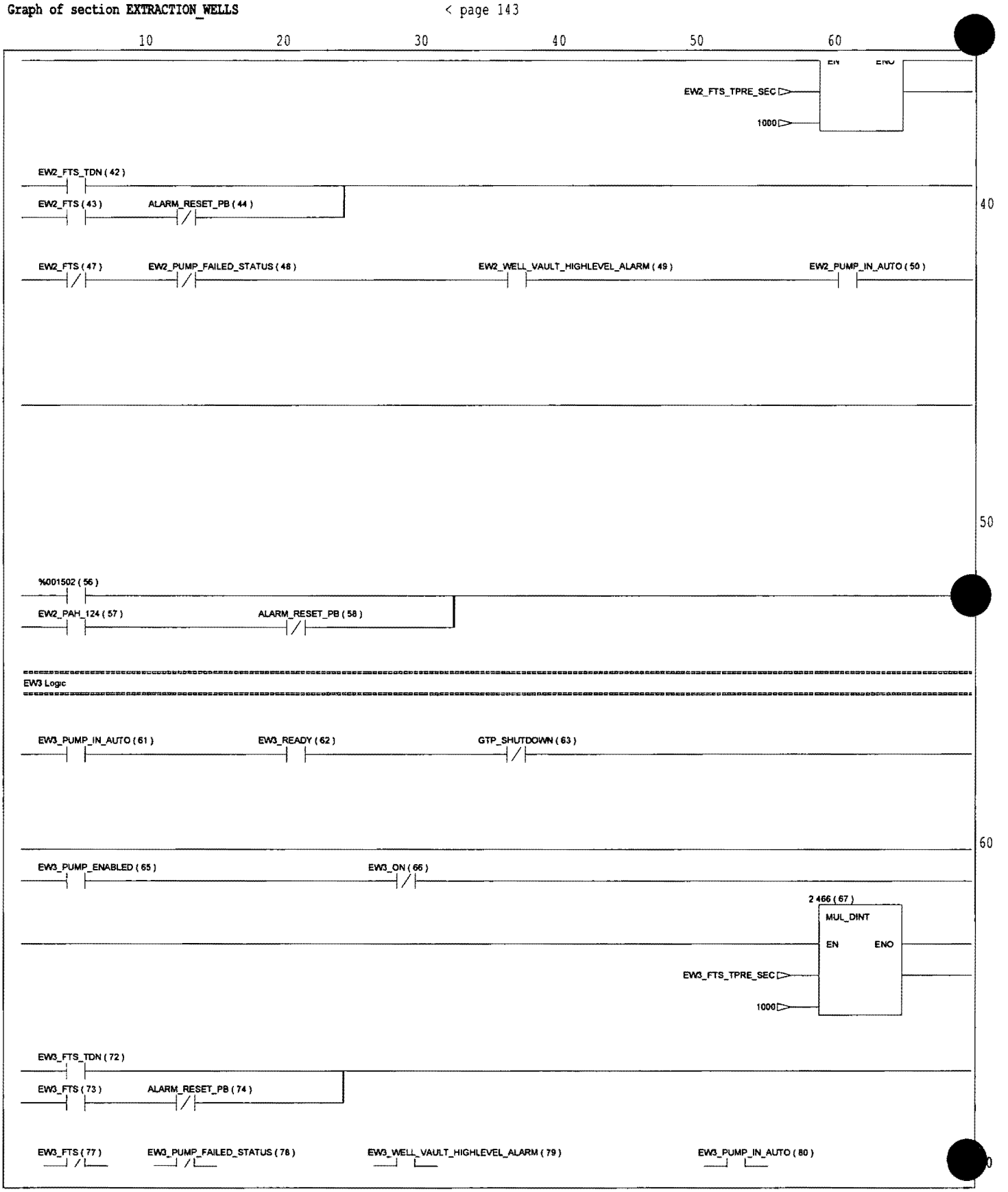

> page 149

Graph of section EXTRACTION_WELLS

< page 144

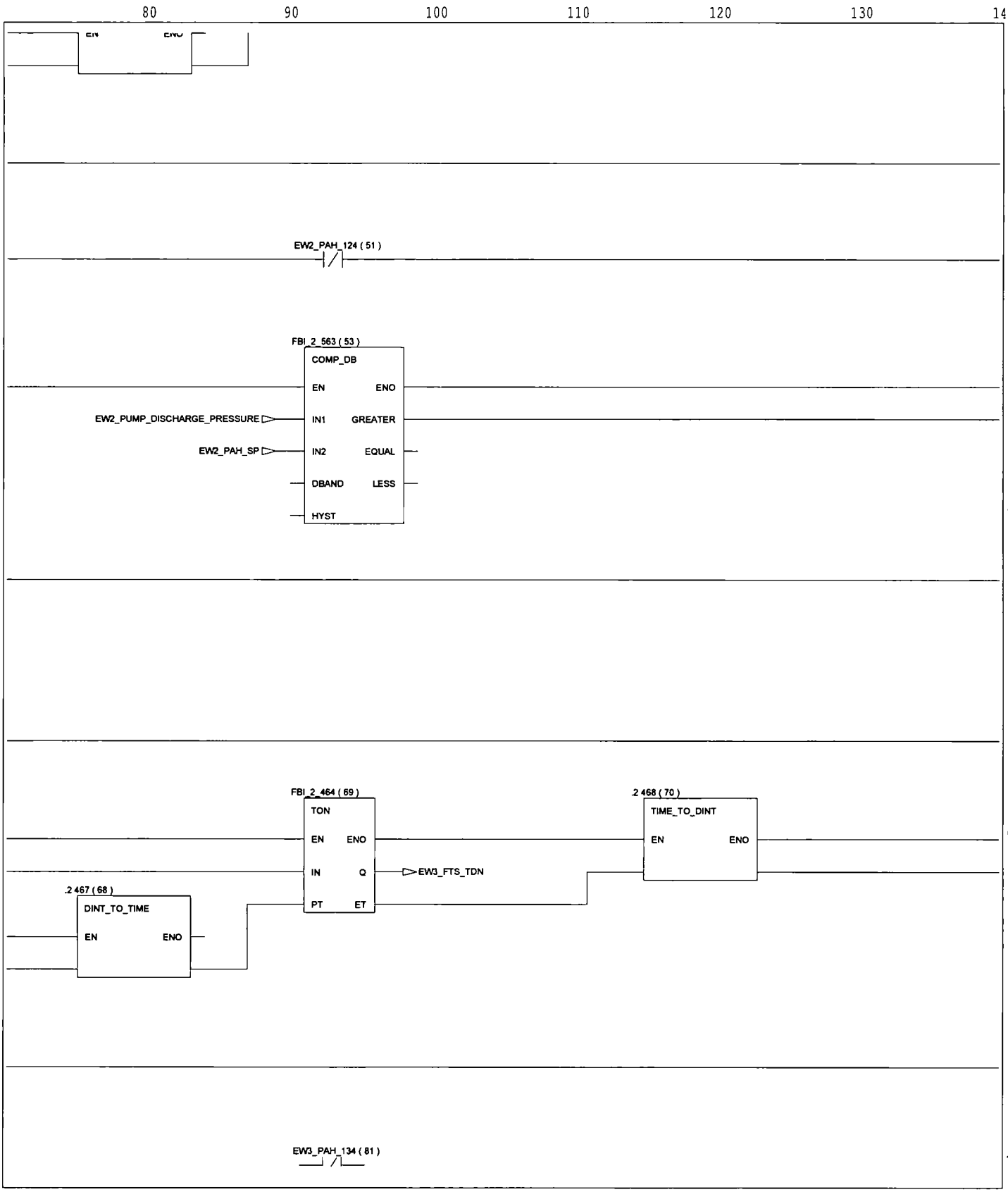

> page 150

Graph of section EXTRACTION_WELLS

< page 145

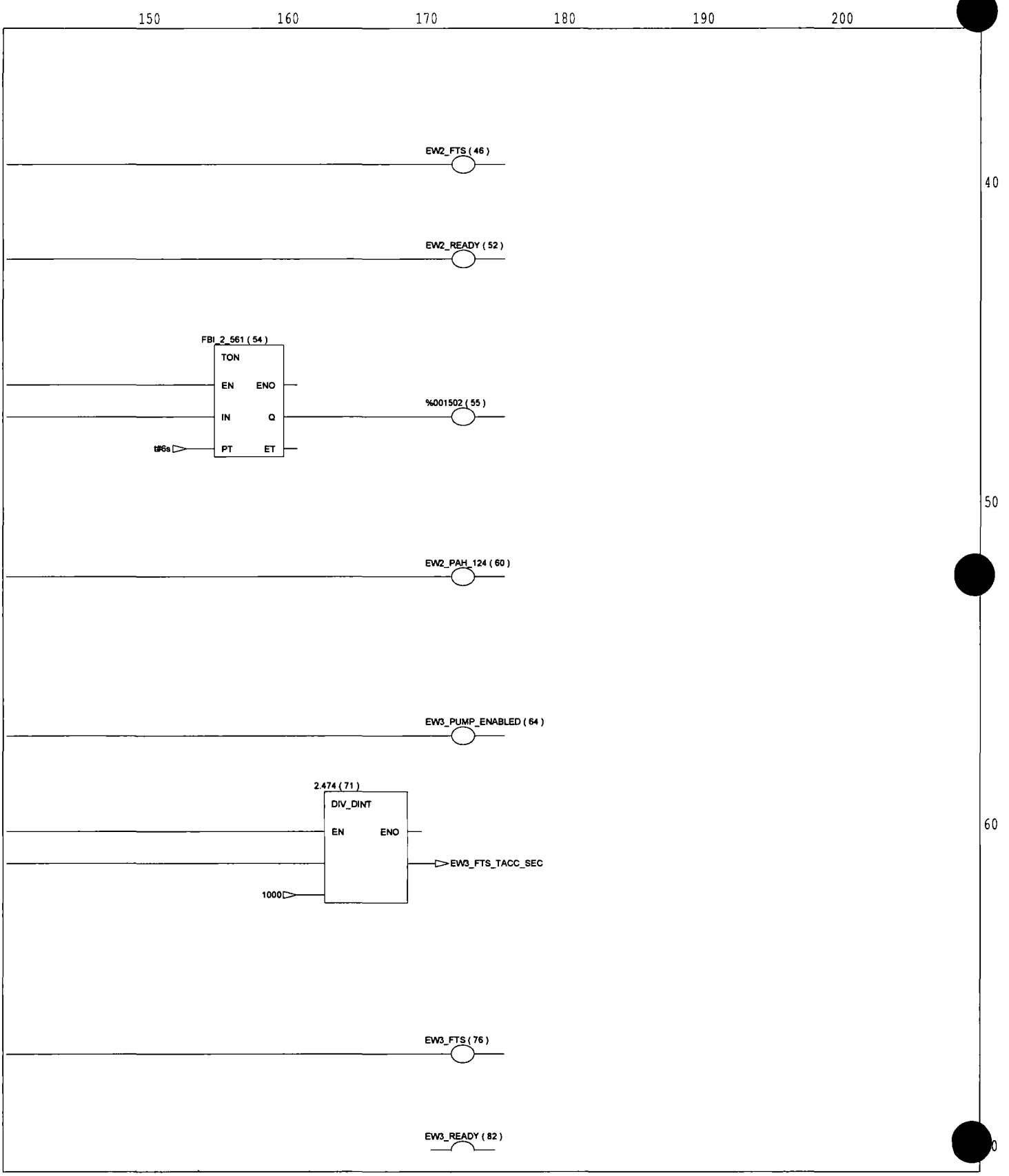

< page 147

> page 151

Graph of section EXTRACTION_WELLS

< page 146

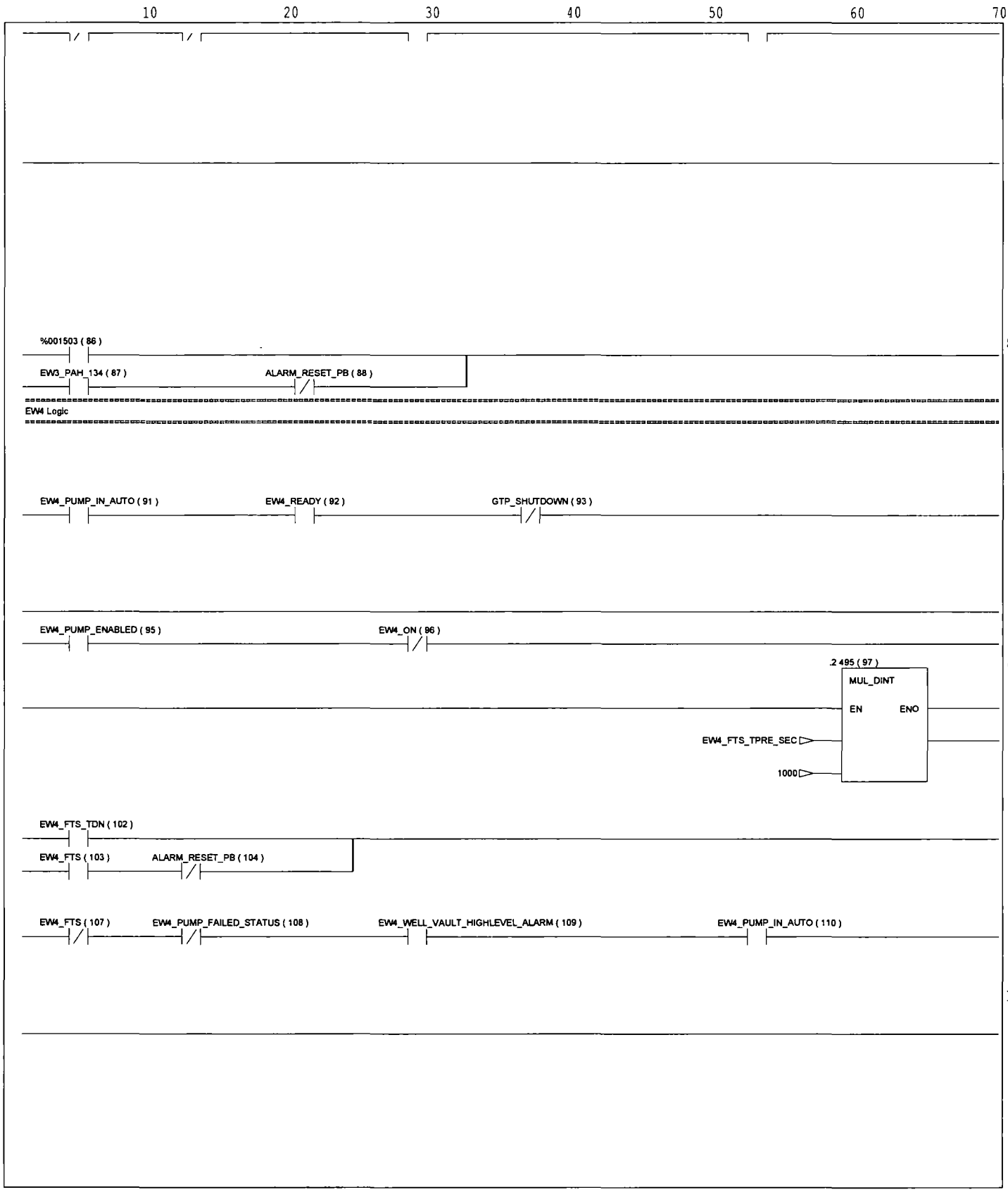

> page 152

Graph of section EXTRACTION_WELLS

< page 147

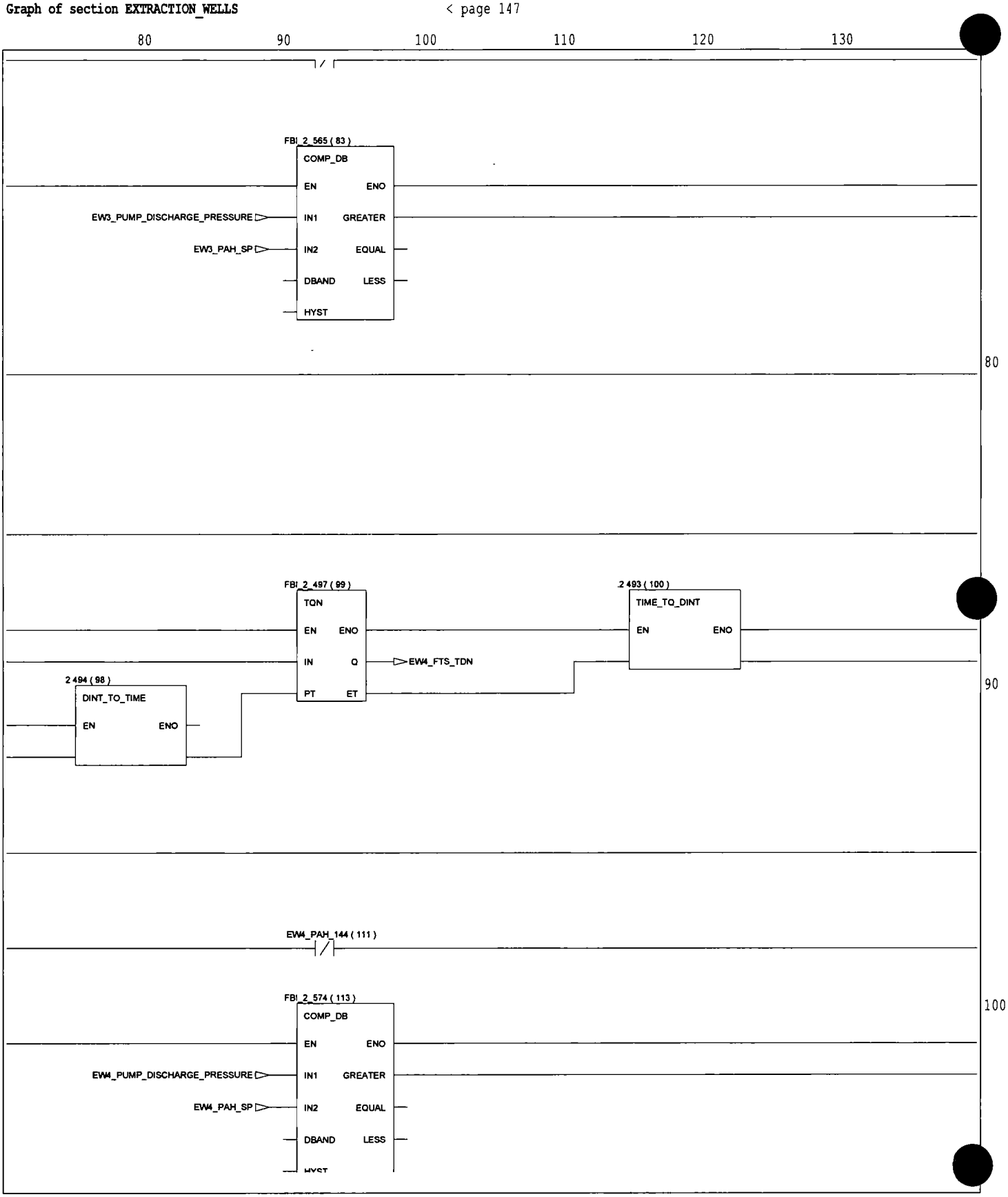

< page 149
> page 151

> page 153

Graph of section EXTRACTION_WELLS

< page 148

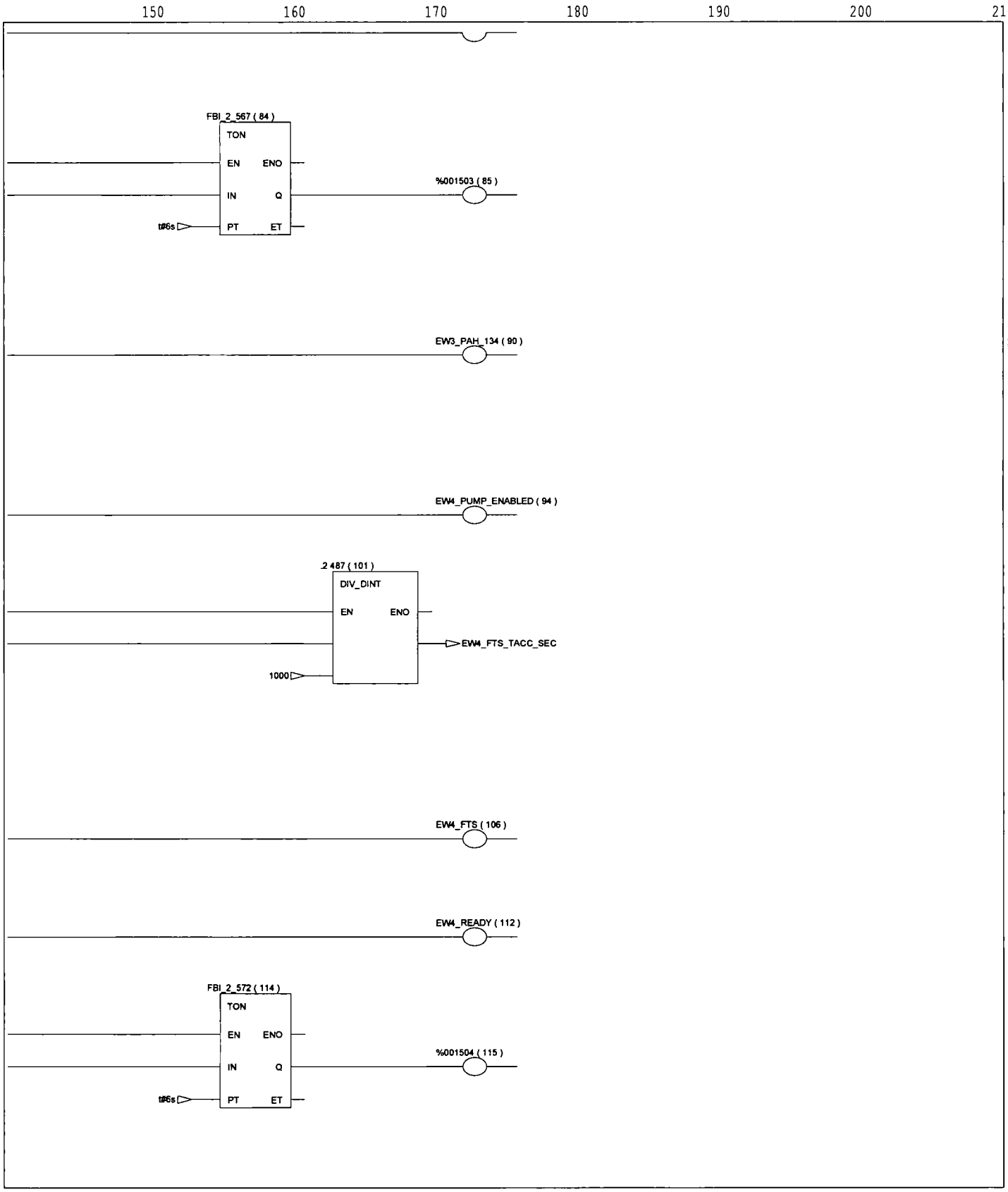

< page 150

> page 154

Graph of section EXTRACTION_WELLS

< page 149

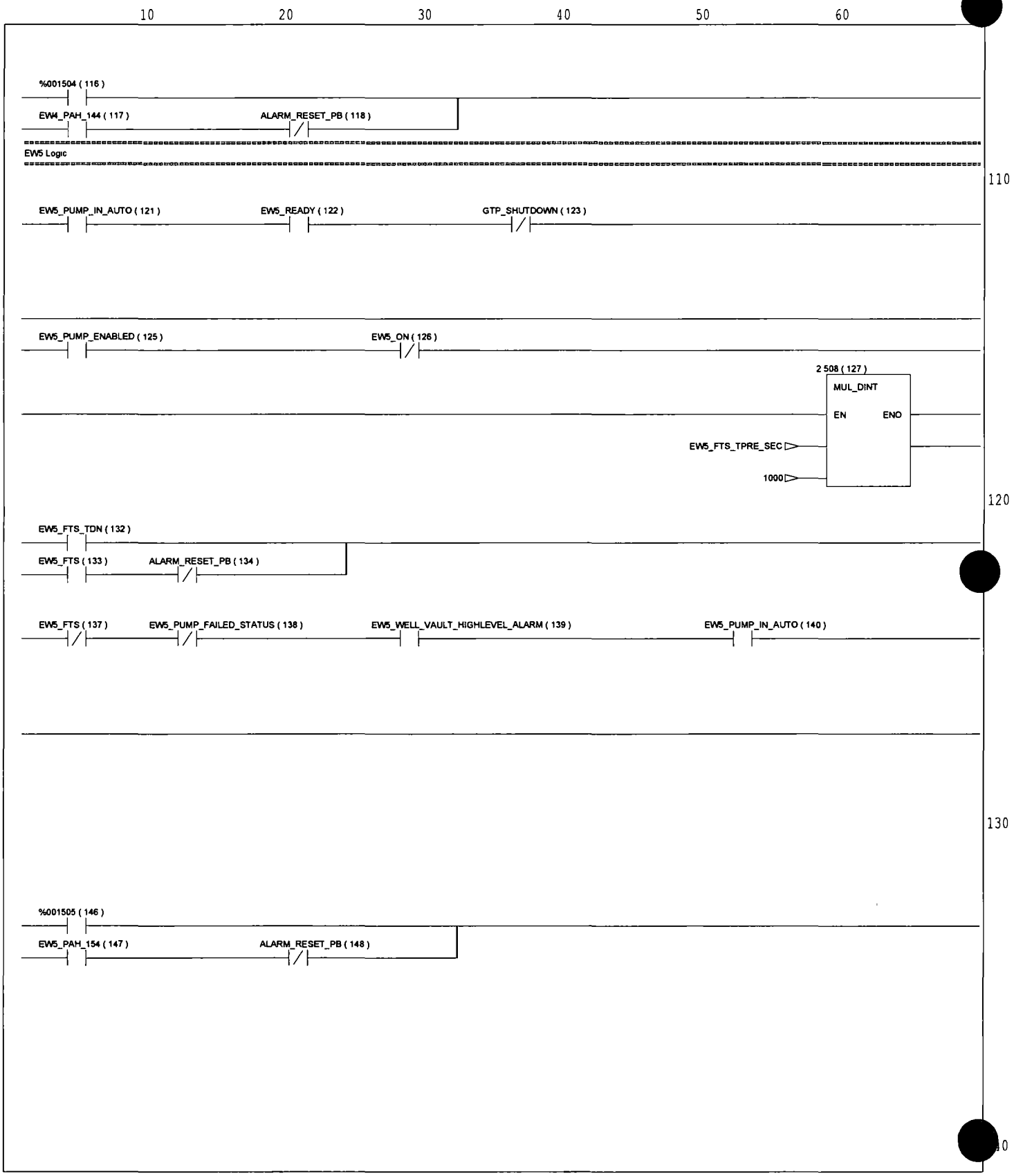

> page 155

Graph of section EXTRACTION_WELLS

< page 150

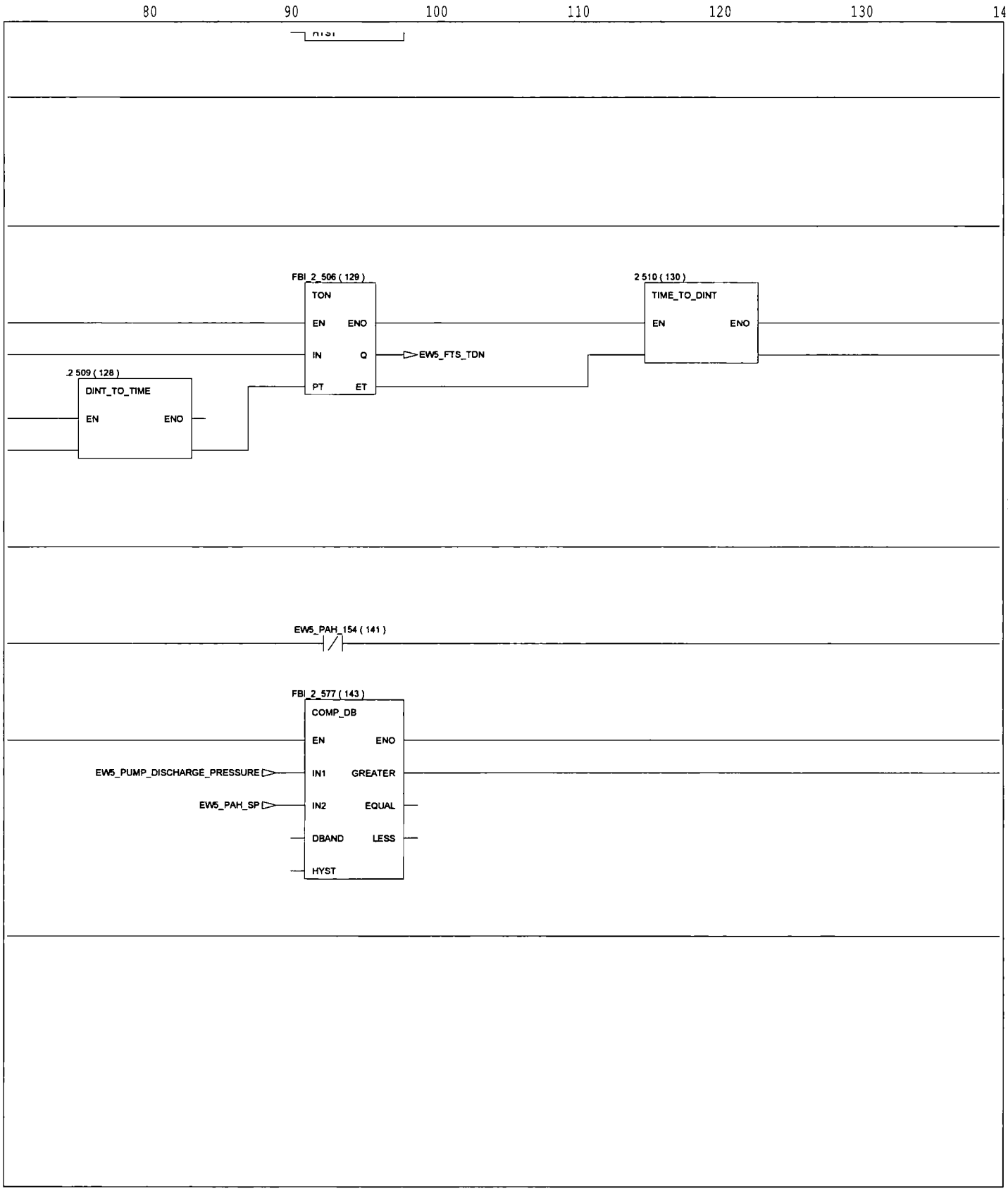

> page 156

Graph of section EXTRACTION_WELLS

< page 151

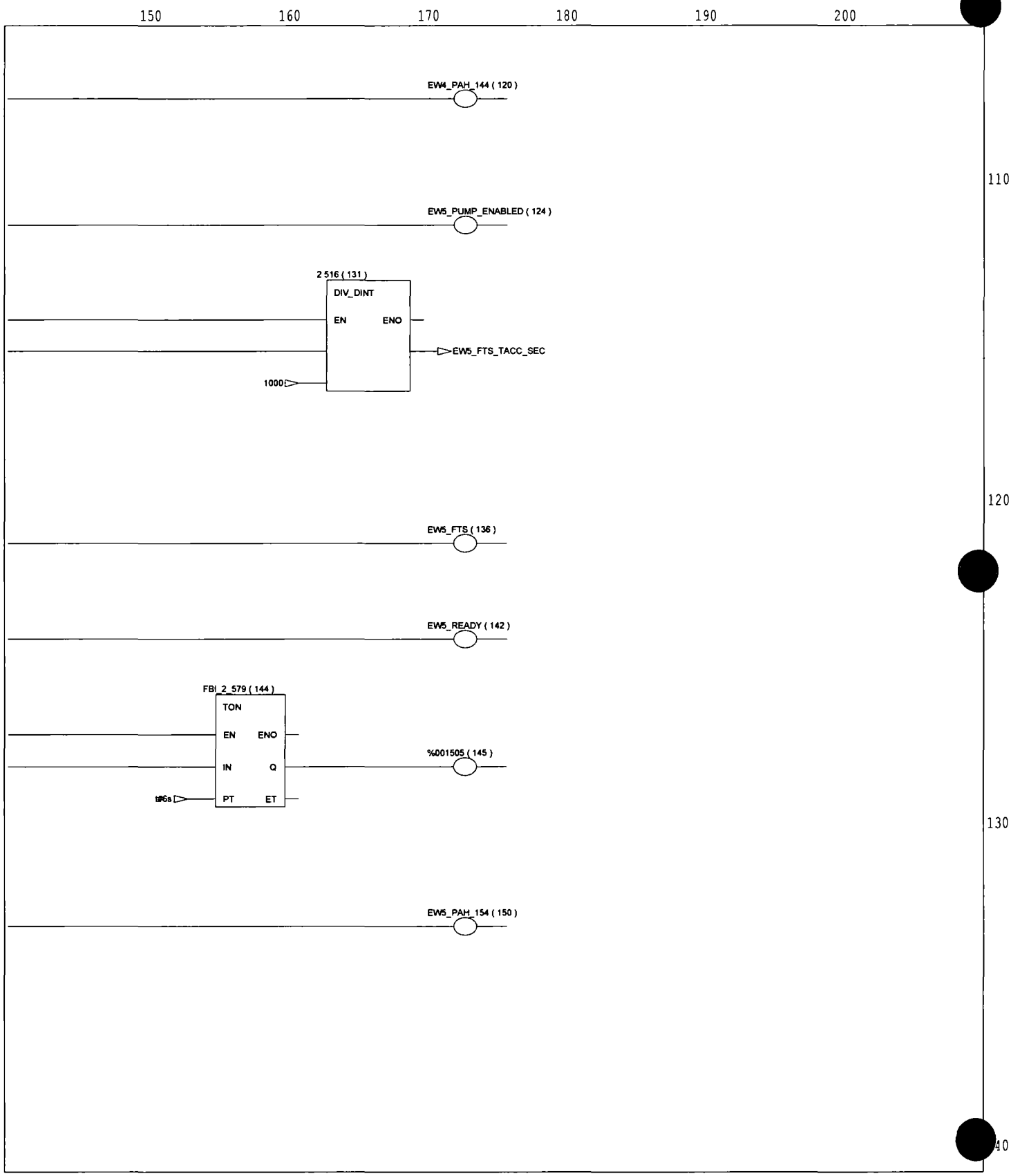

< page 153

> page 157

Graph of section EXTRACTION_WELLS

< page 152

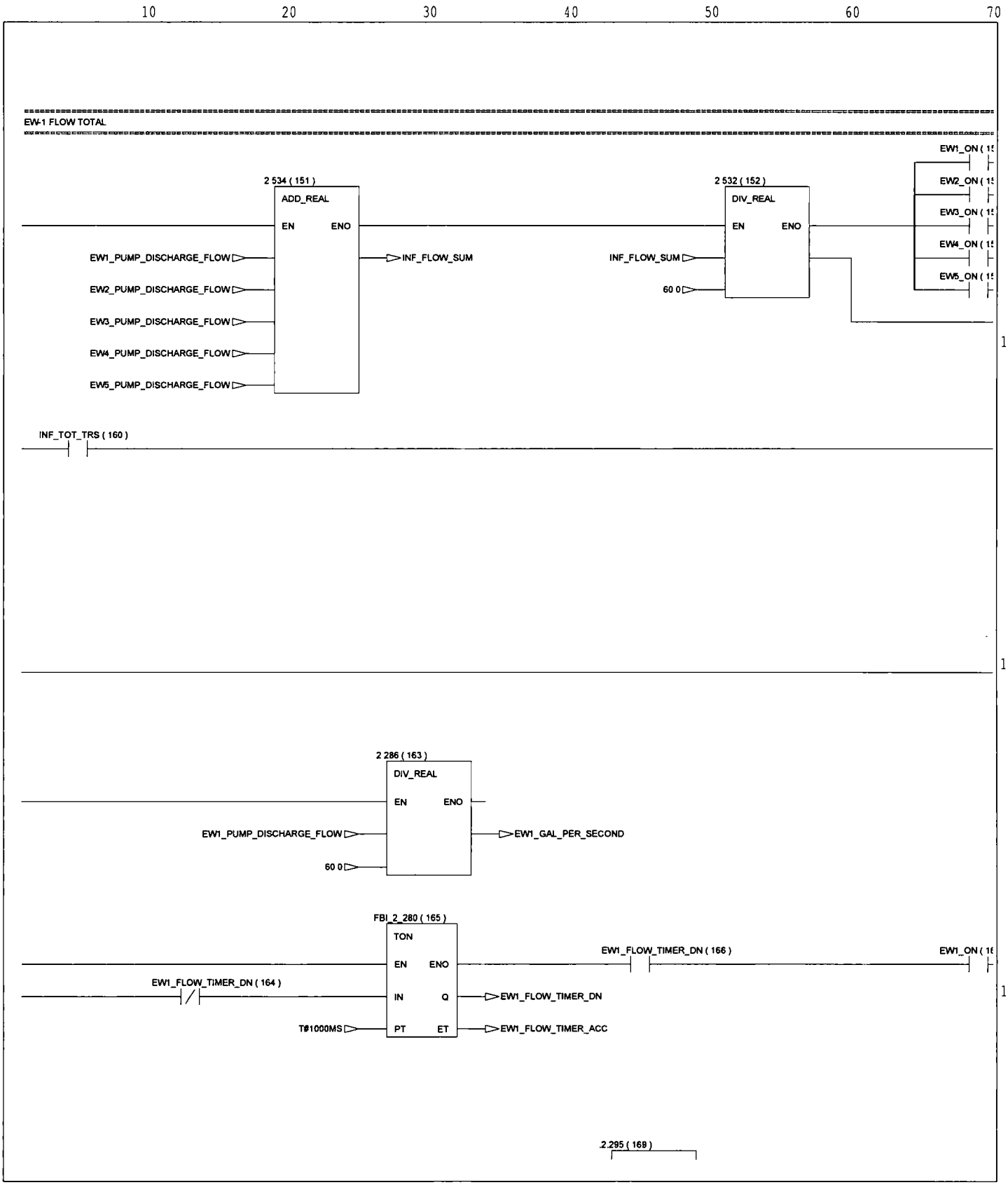

> page 158

Graph of section EXTRACTION_WELLS

< page 153

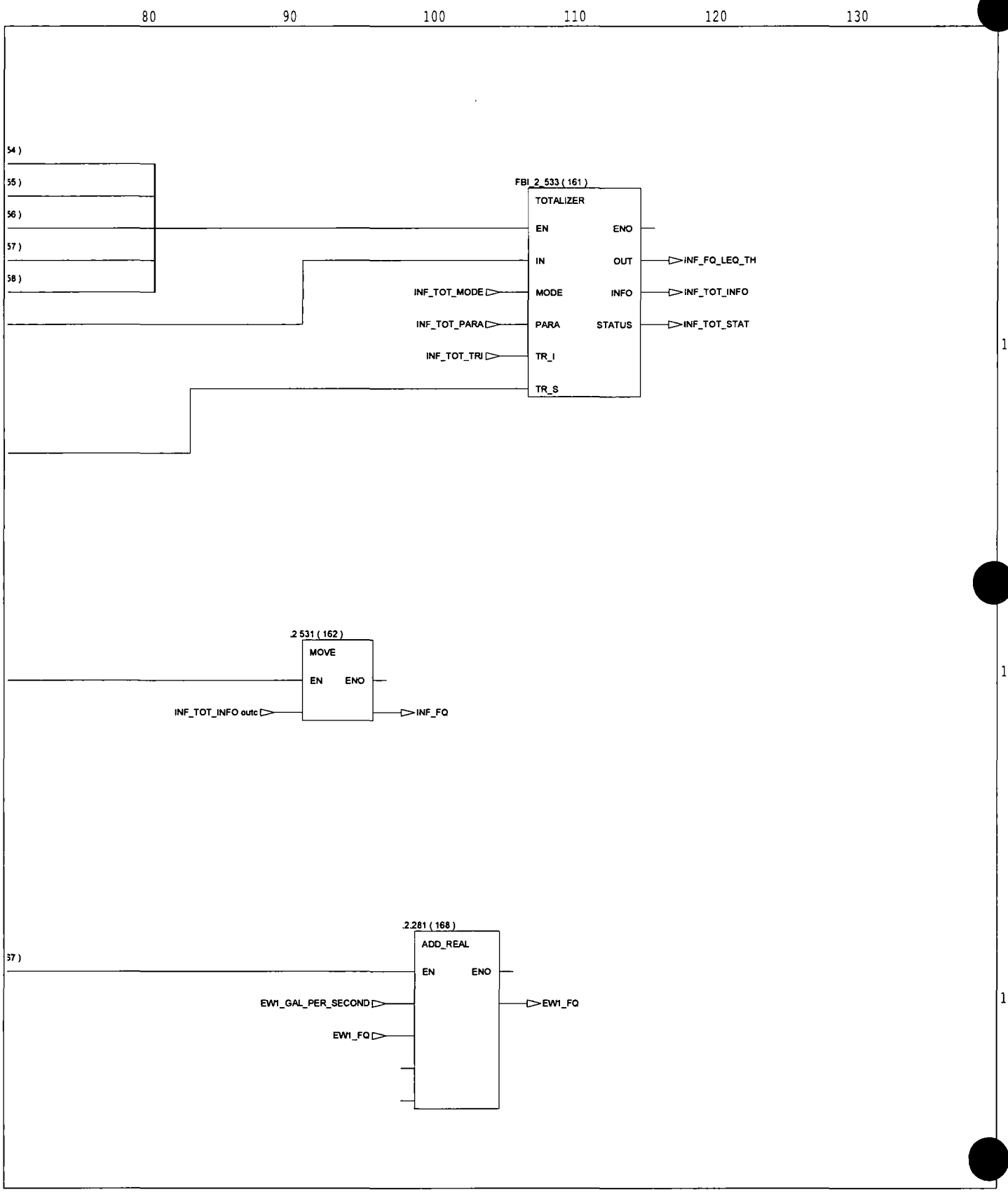

> page 159

Graph of section EXTRACTION_WELLS

< page 154

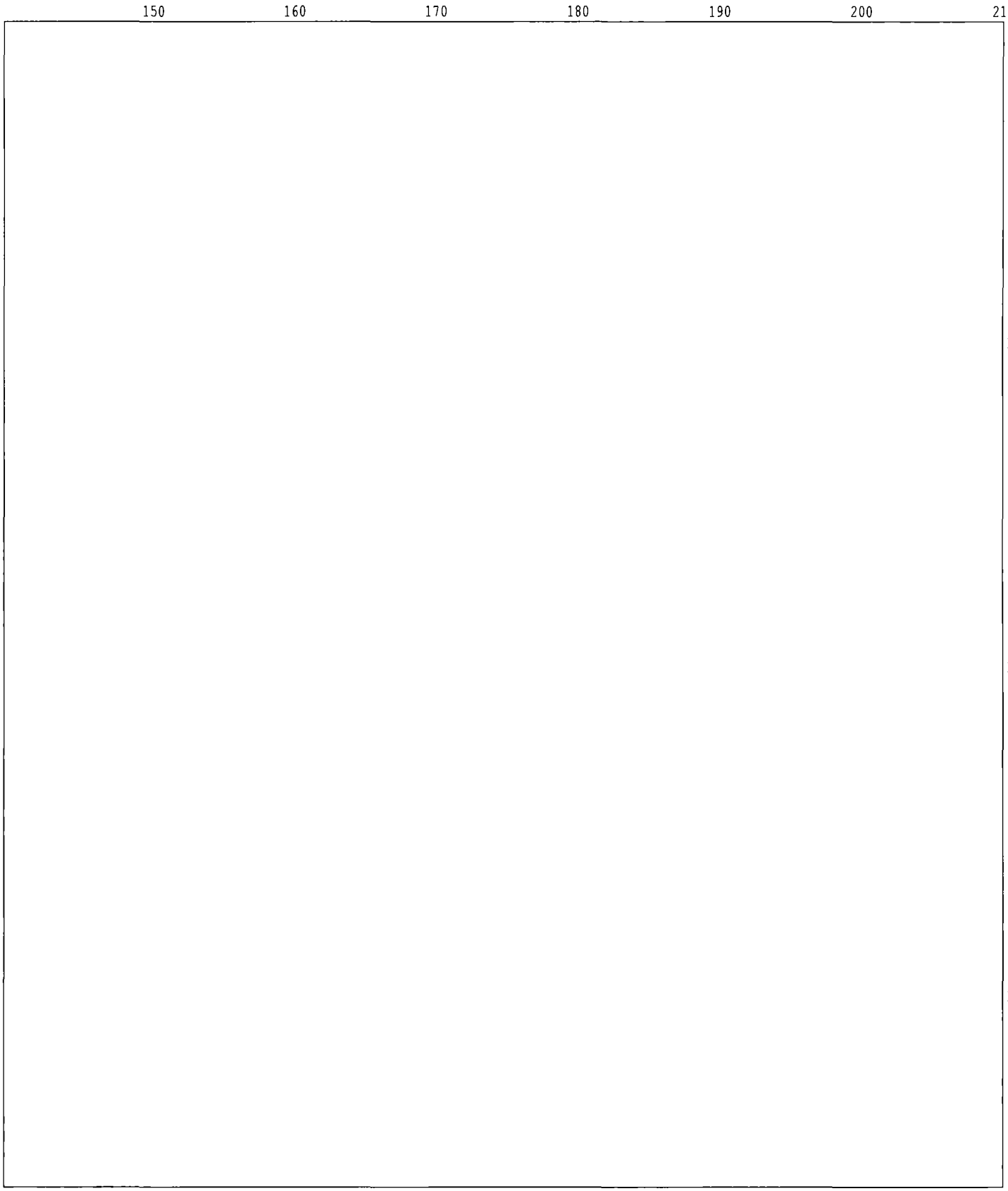

< page 156

> page 160

Graph of section EXTRACTION_WELLS

< page 155

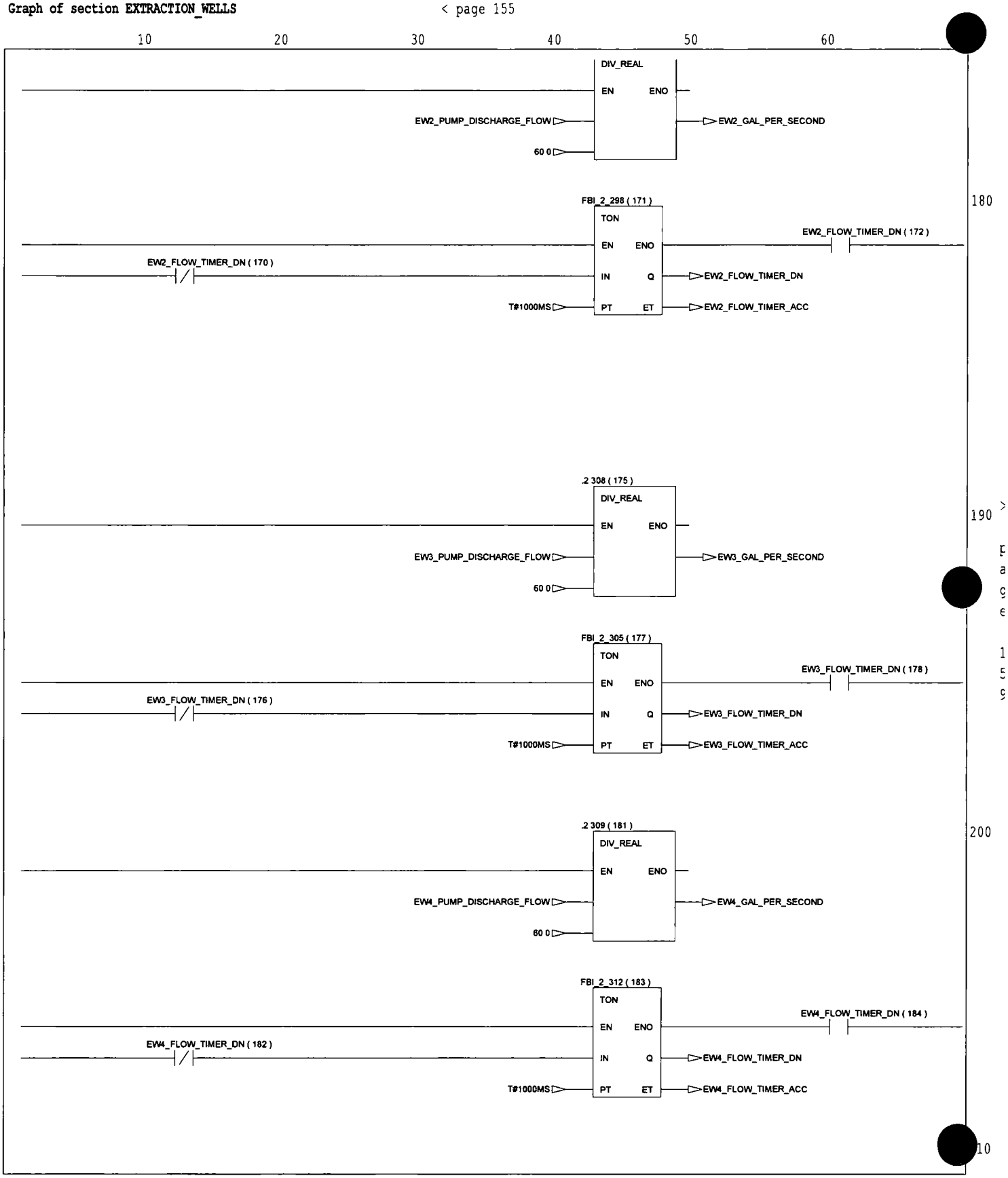

> page 161

Graph of section EXTRACTION_WELLS

< page 156

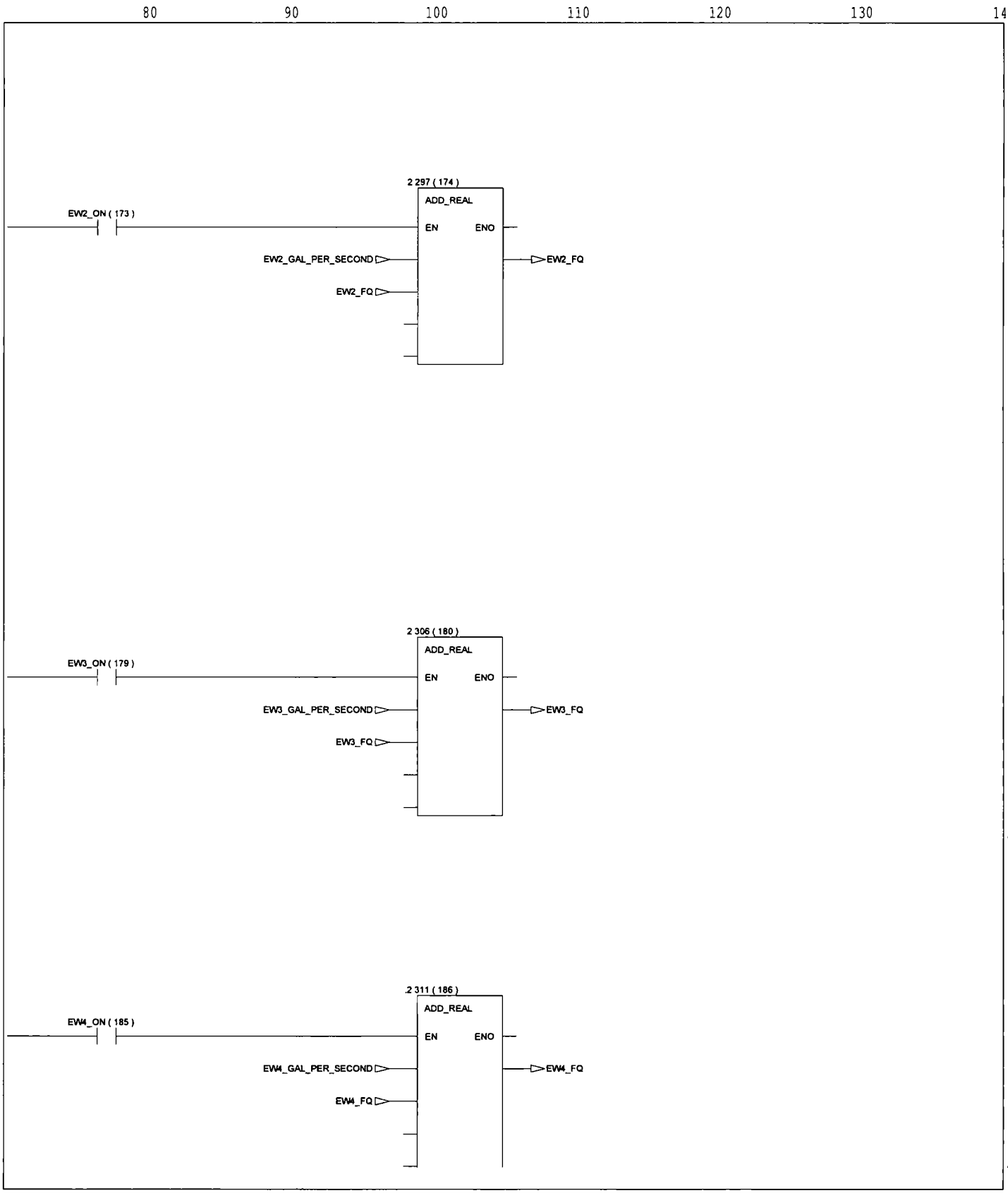

< page 158
> page 160
> page 162

Graph of section EXTRACTION_WELLS

< page 157

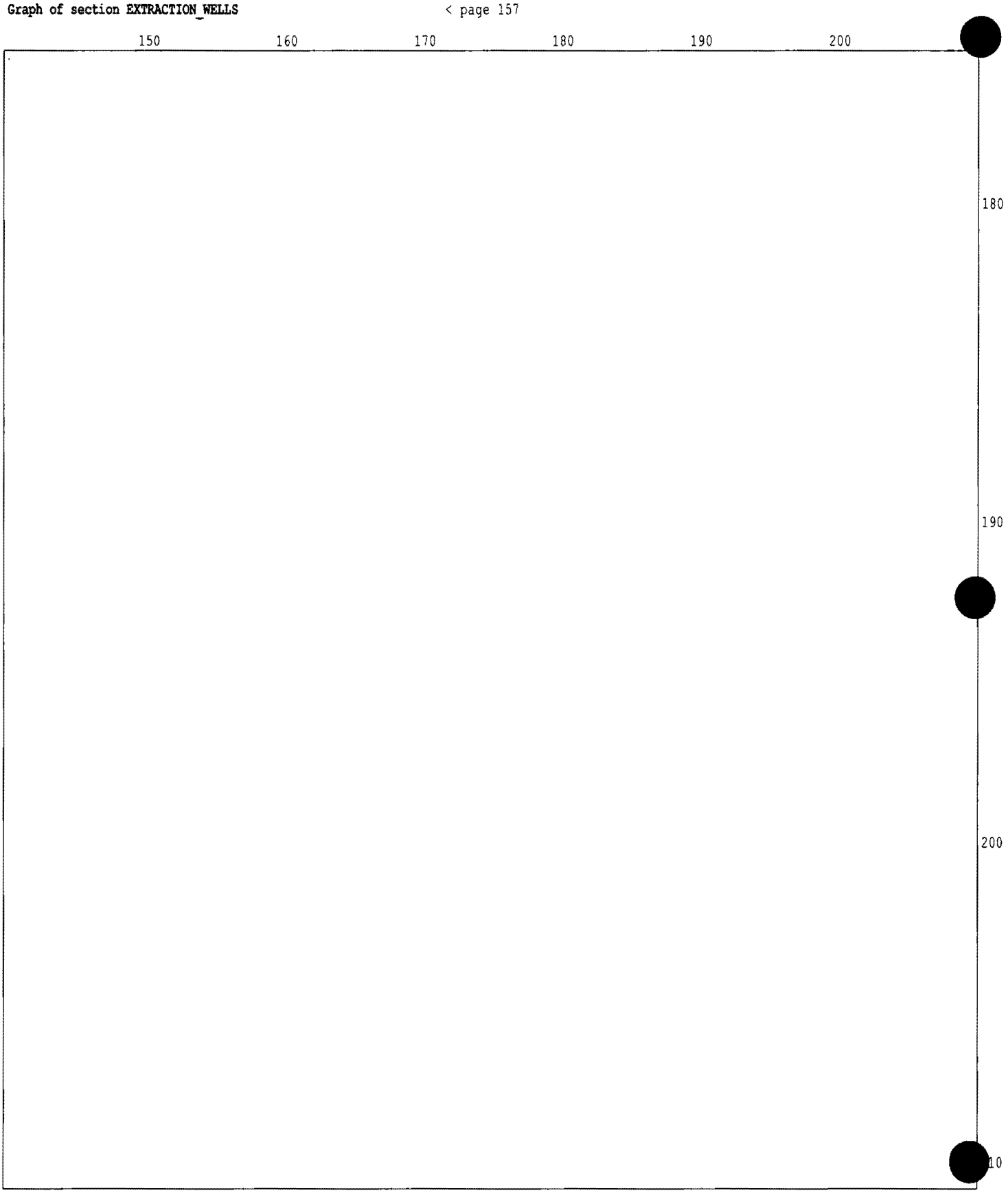

< page 159

> page 163

Graph of section EXTRACTION_WELLS

< page 158

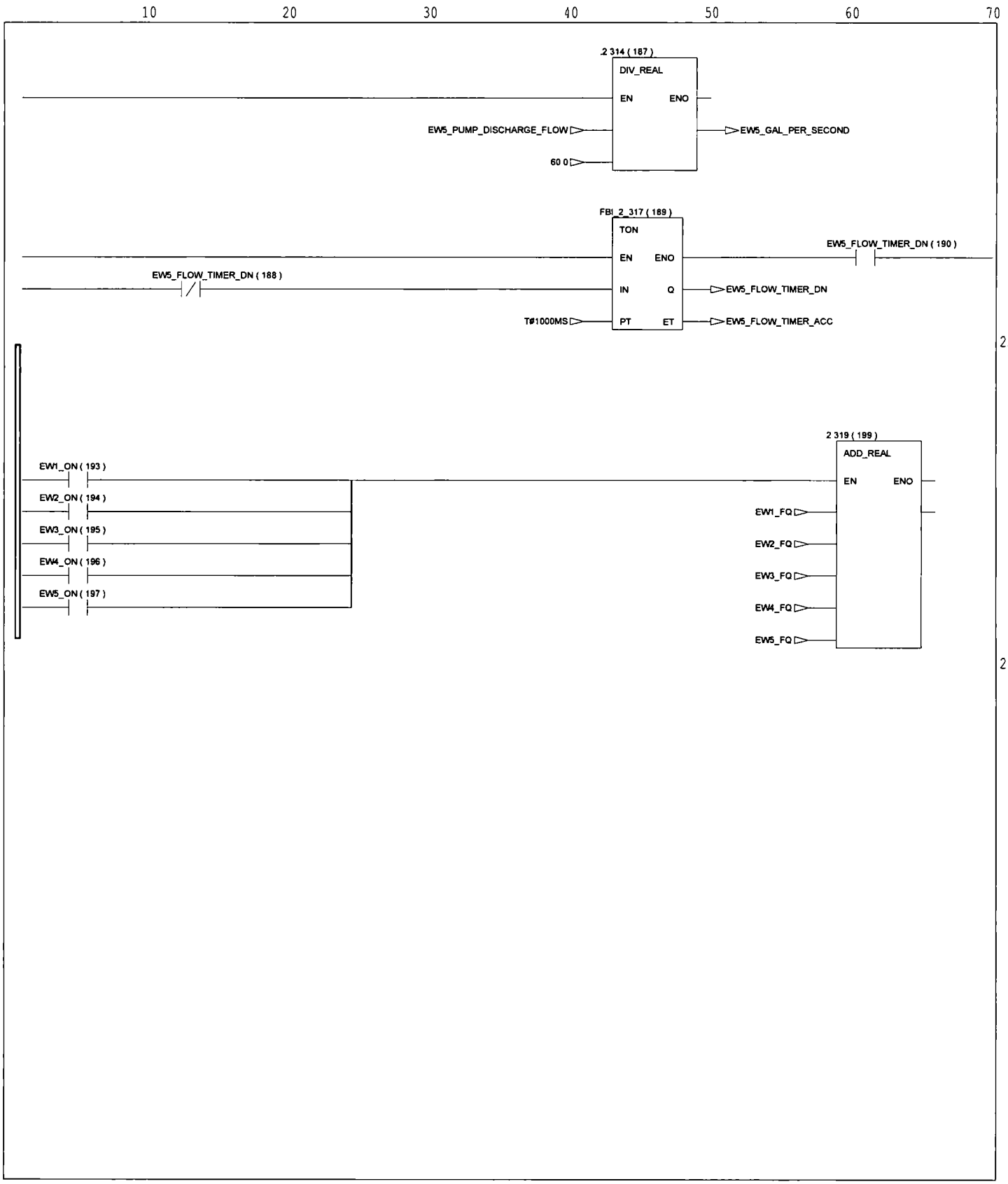

Graph of section EXTRACTION_WELLS

< page 159

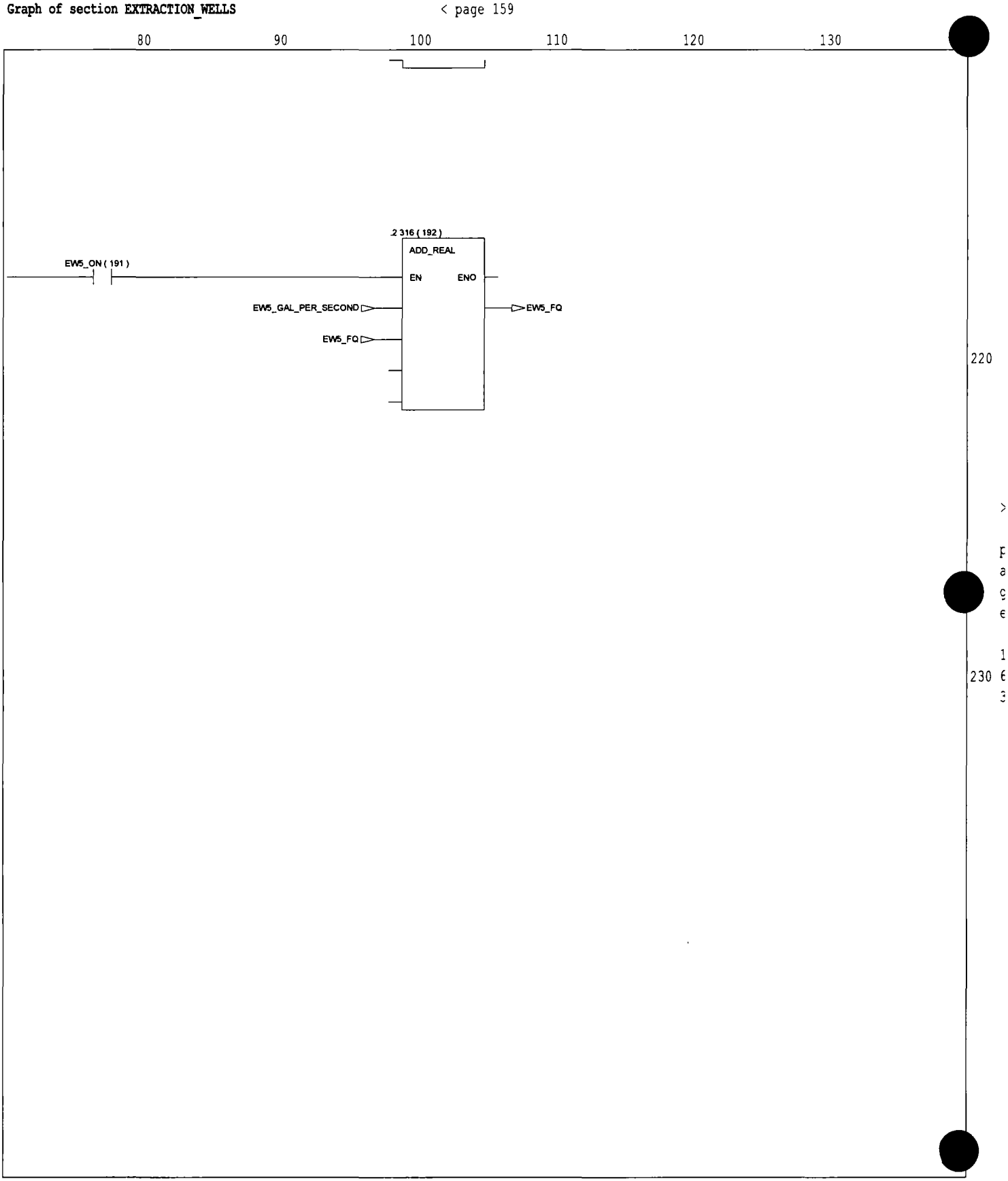

< page 161

> page 163

Graph of section EXTRACTION_WELLS

< page 160

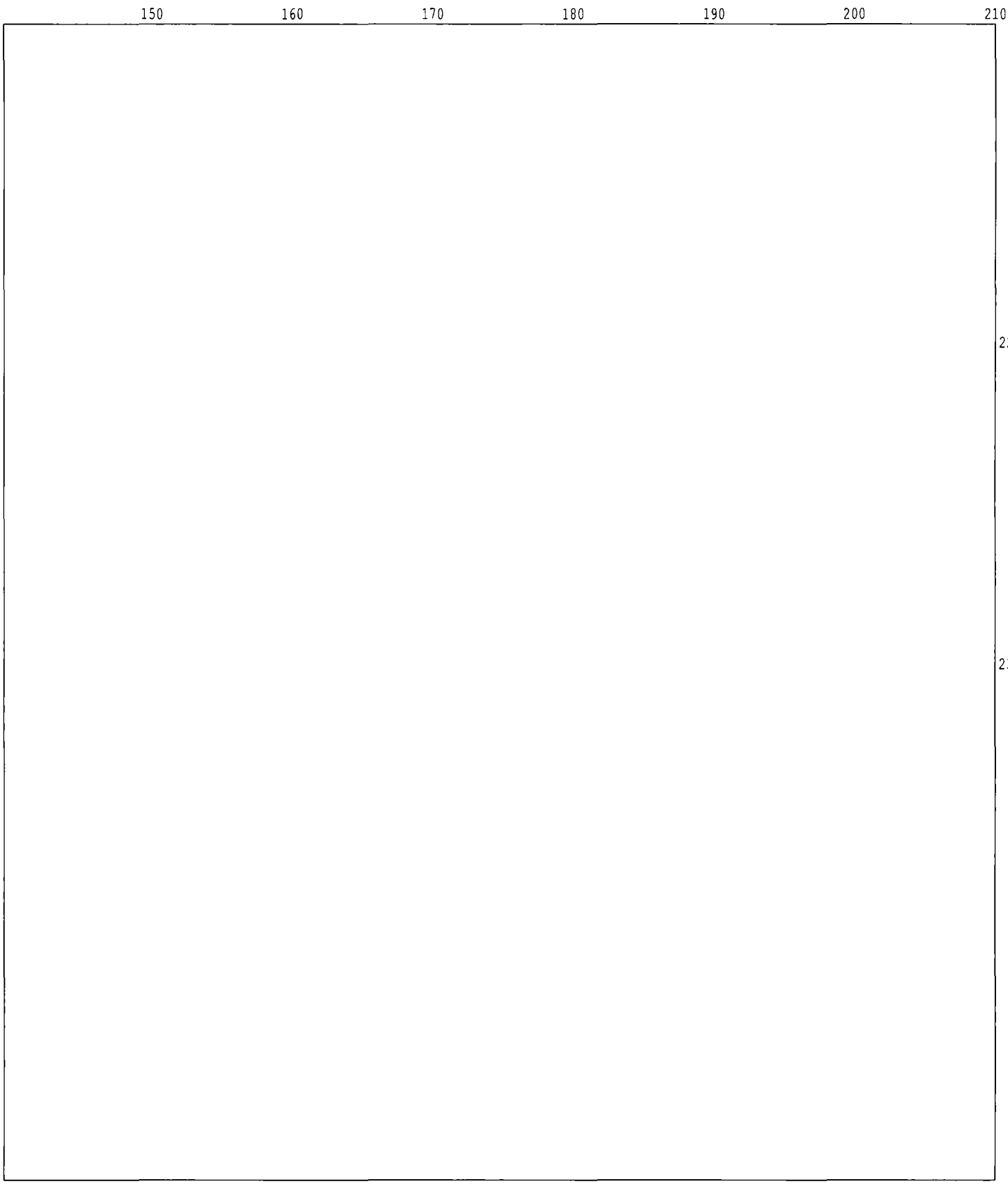

< page 162

Graph of section SHUTDOWN

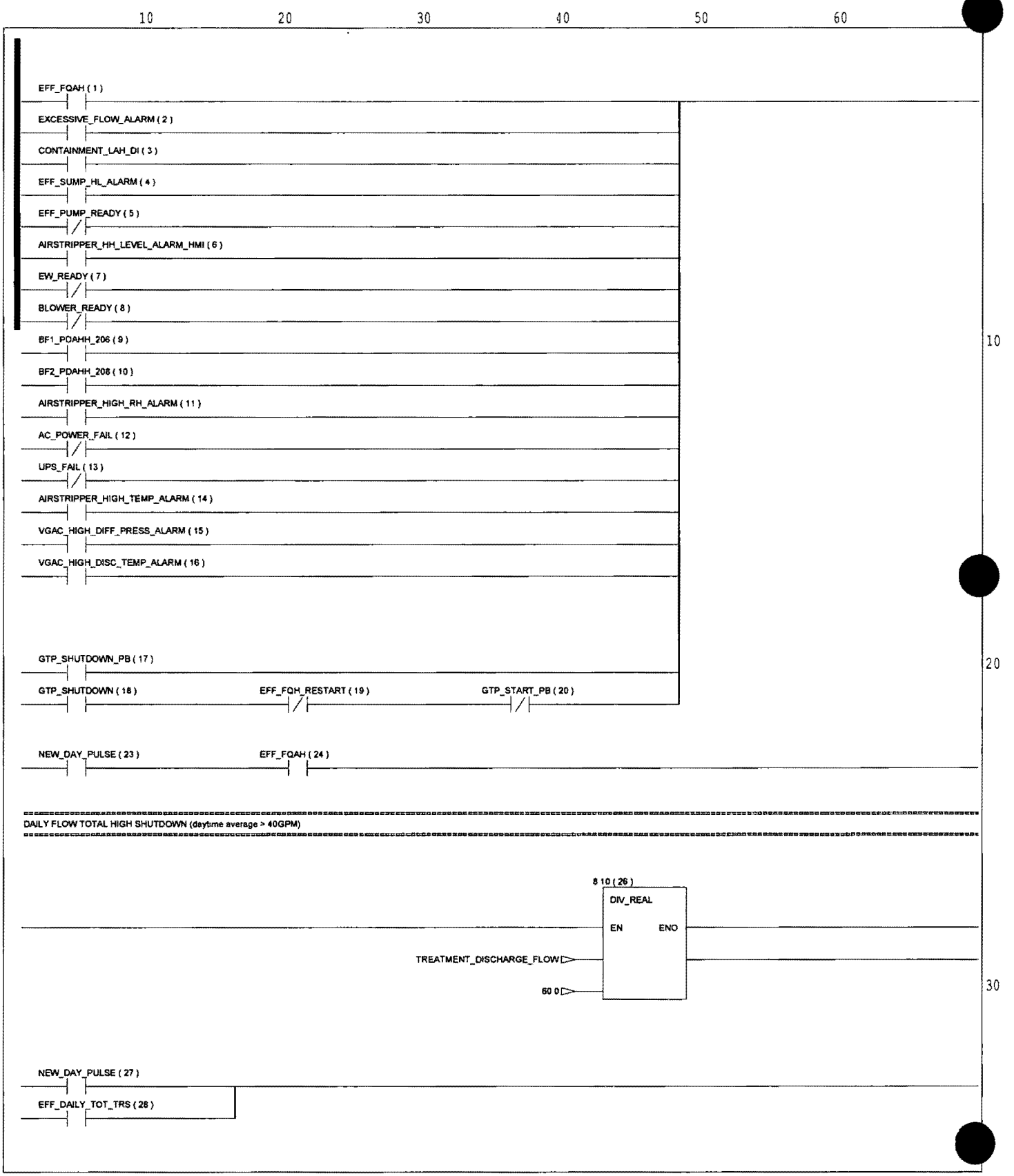

> page 166

Graph of section SHUTDOWN

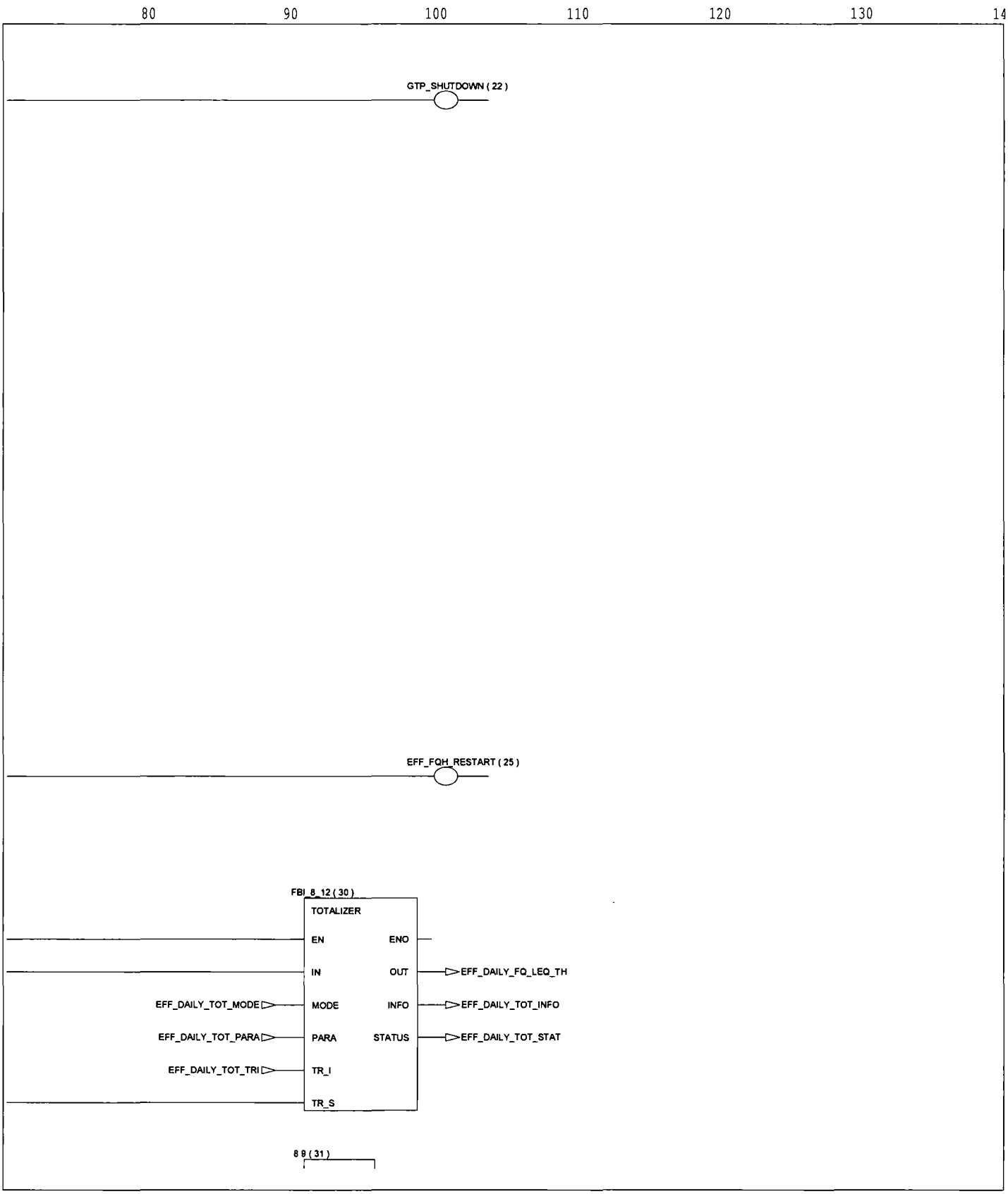

< page 164

> page 167

Graph of section SHUTDOWN

< page 164

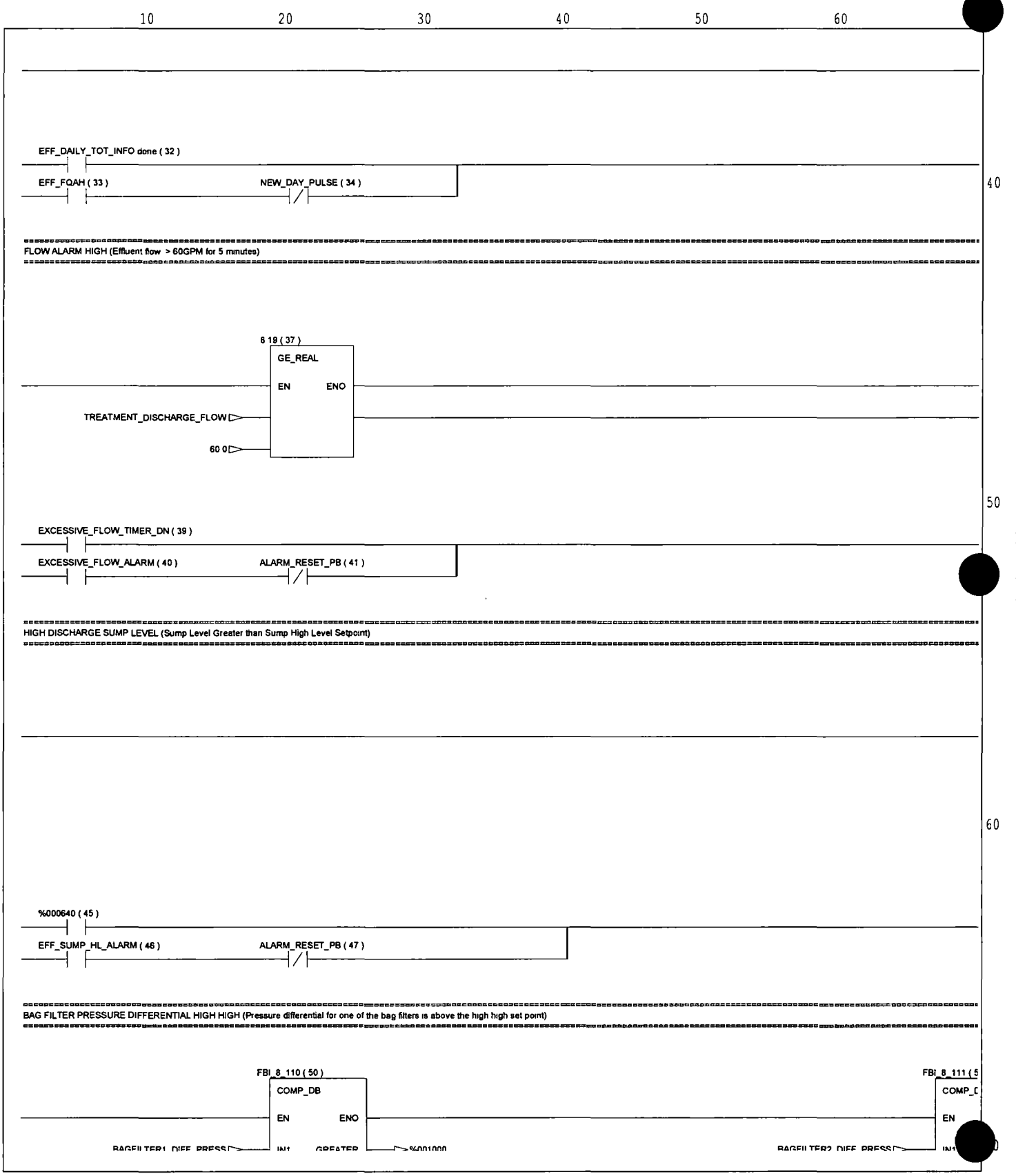

> page 168

Graph of section SHUTDOWN

< page 165

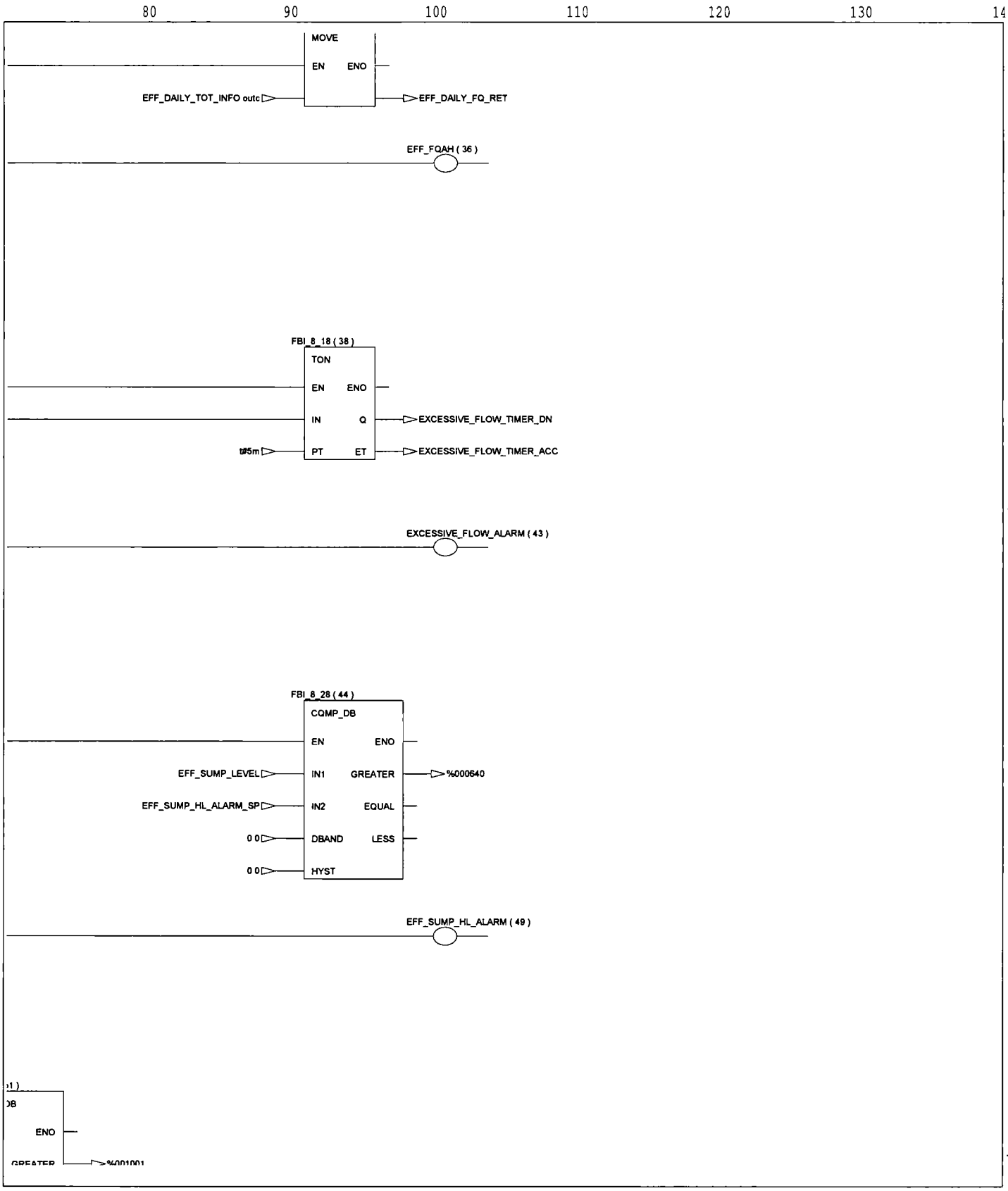

< page 166

> page 169

Graph of section SHUTDOWN

< page 166

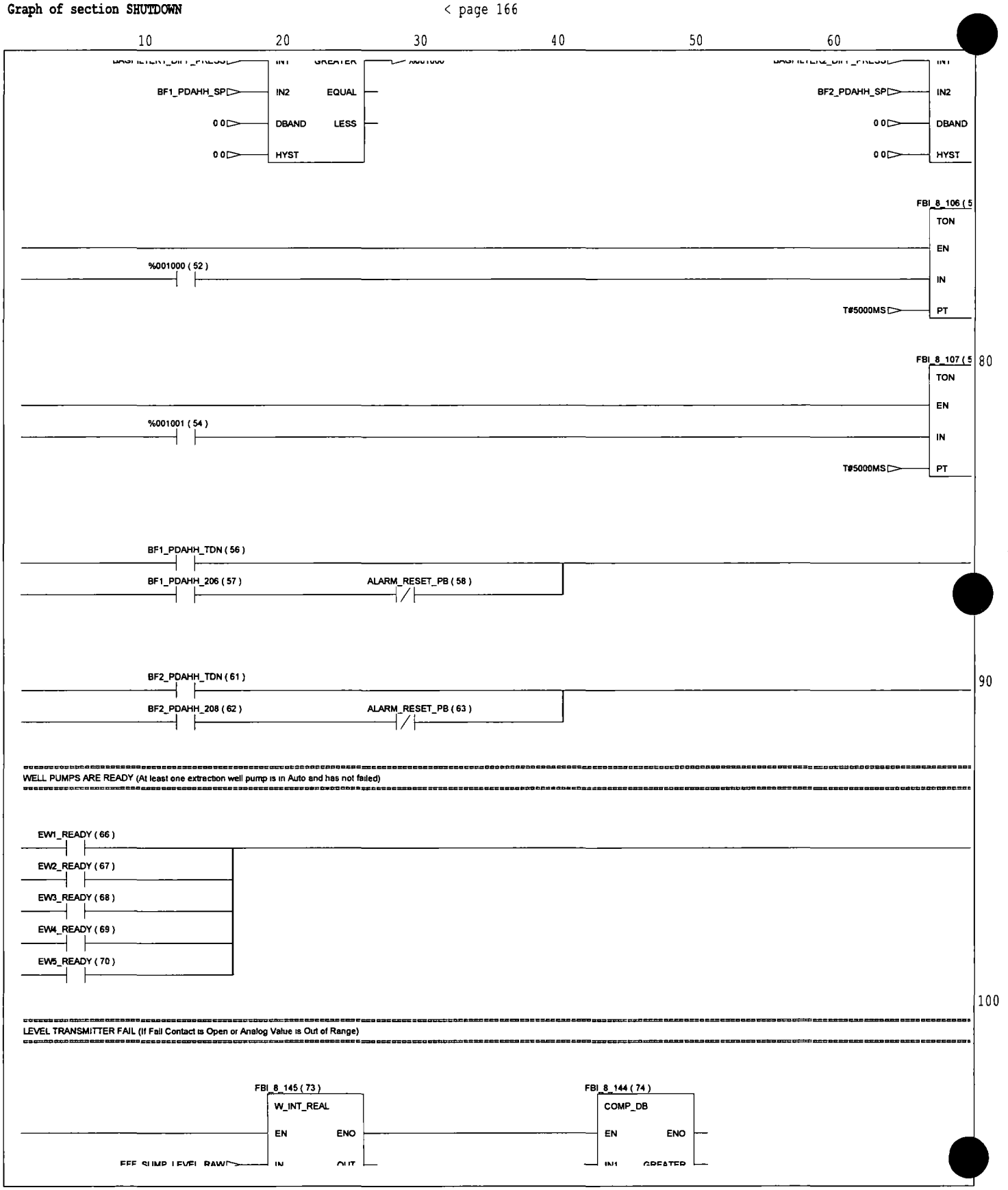

> page 170

Graph of section SHUTDOWN

< page 167

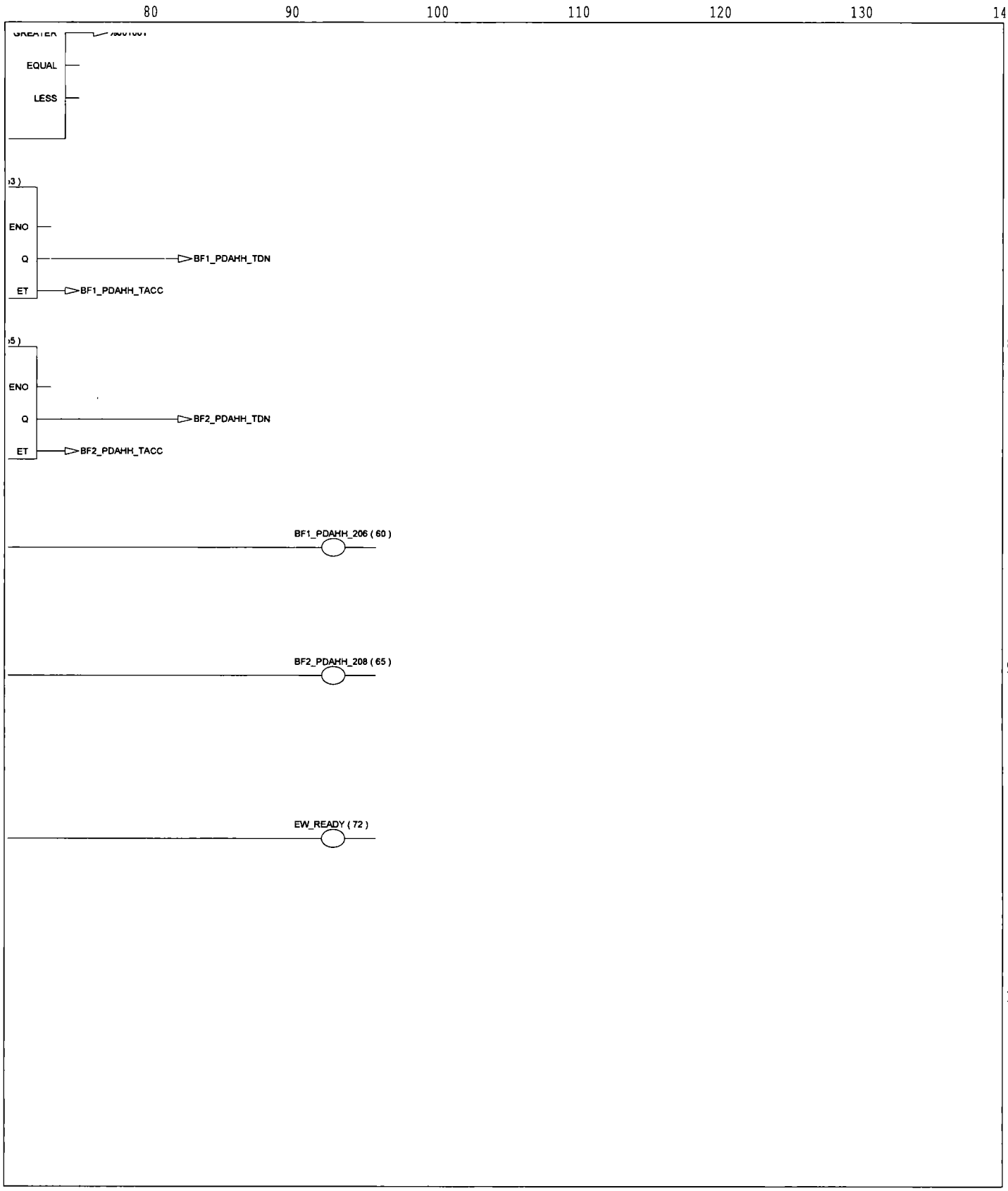

> page 171

Graph of section SHUTDOWN

< page 168

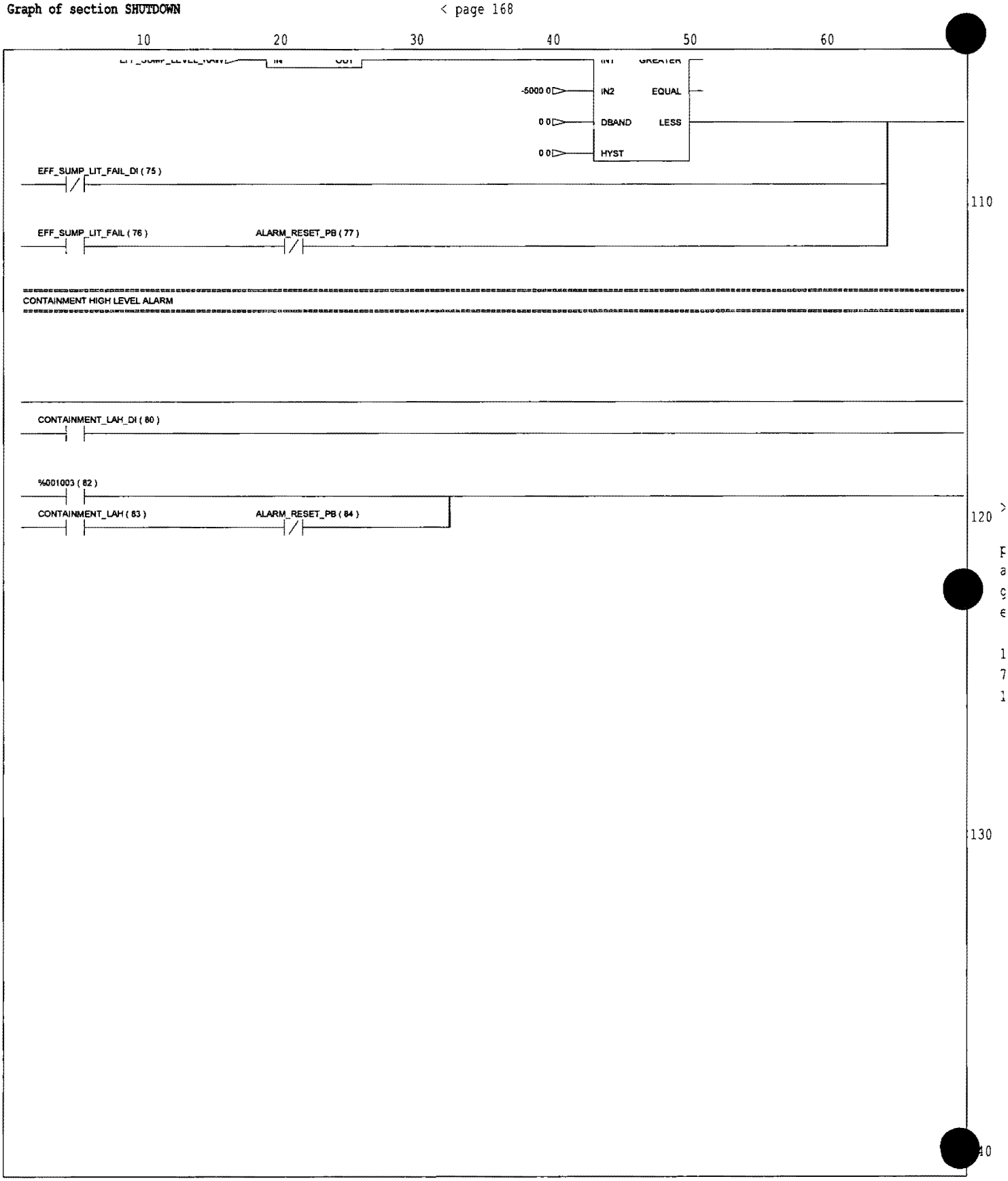

Graph of section SHUTDOWN

< page 169

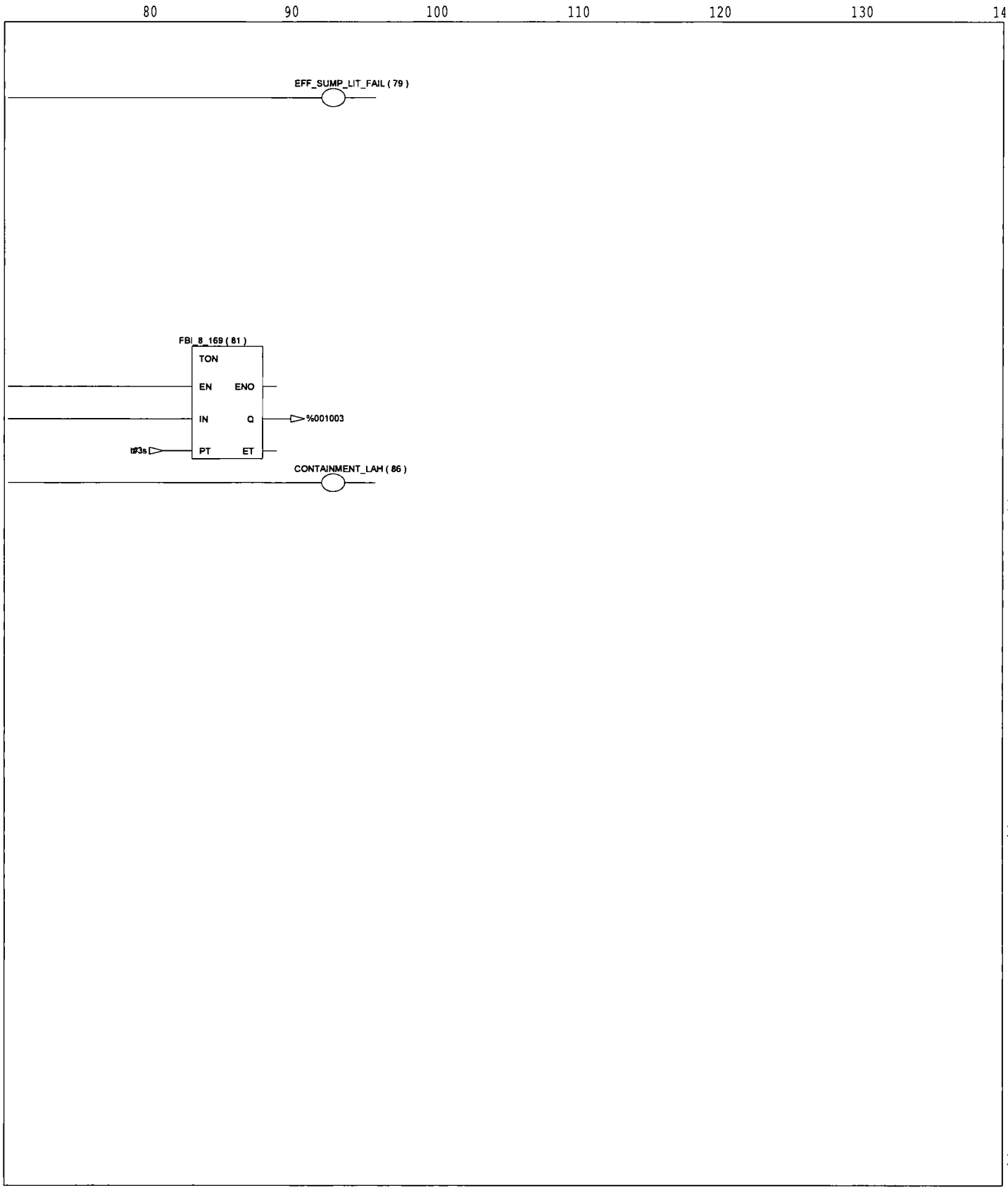

< page 170

Graph of section SYS_OH

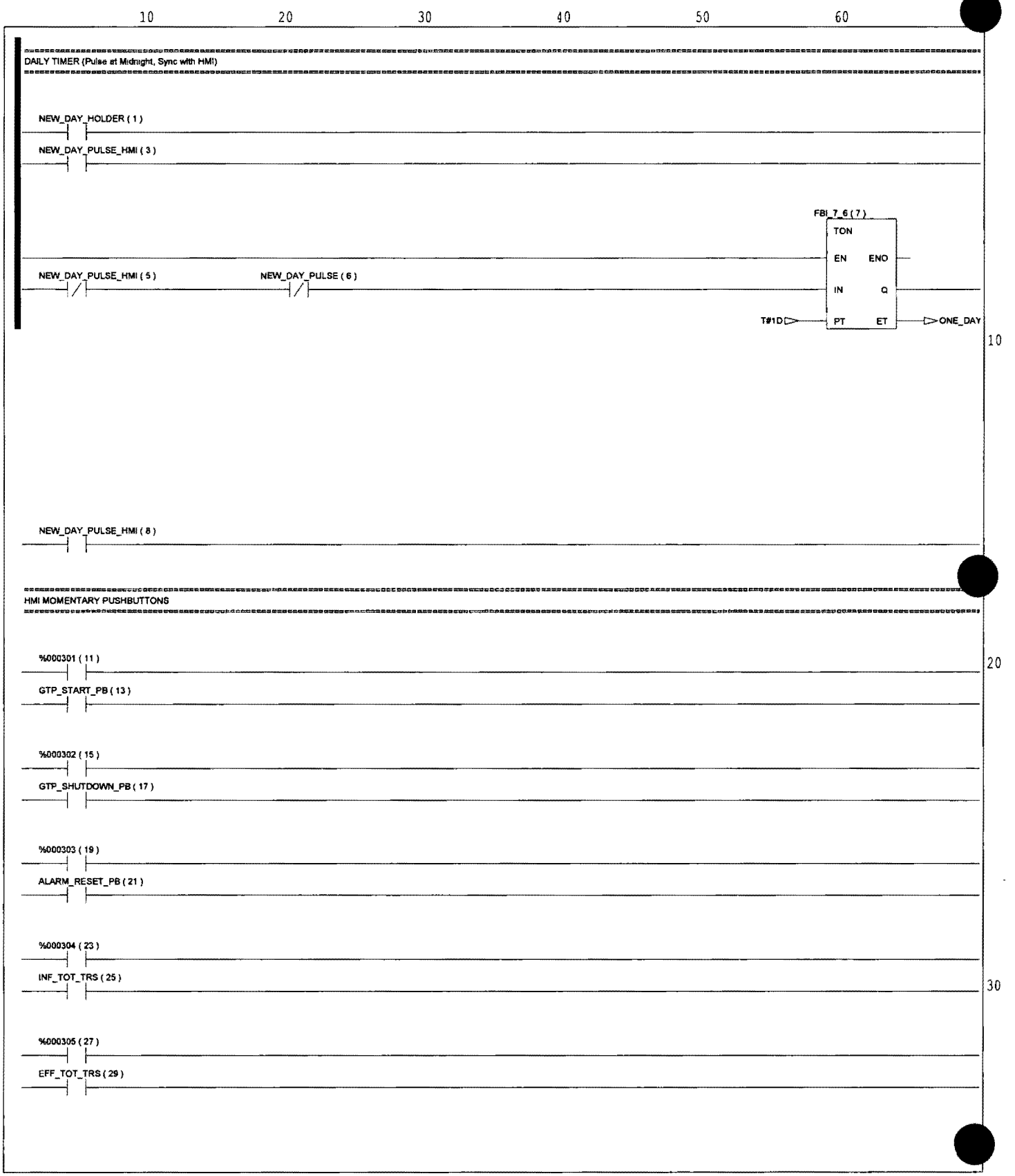

Graph of section SYS_OH

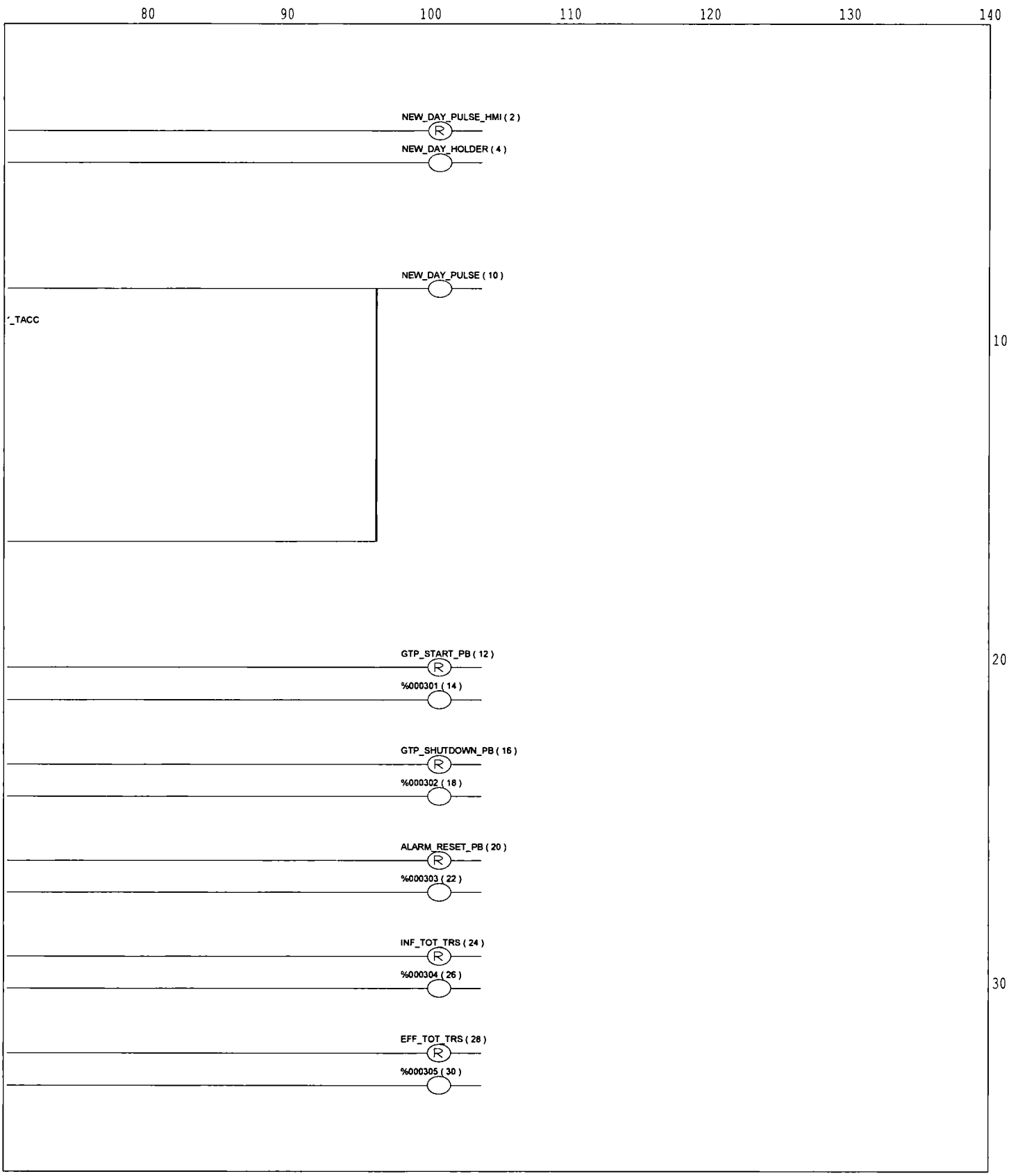

D F B u s a g e: does not exist

EFB usage

Name	Version	Kind	EFB Library	Used in section	Instance	at
NO_CONTACT	3/24/1997 14:20:55	FUNCT	IEC_LAD	SYS_OH	.7.1	3,3
				SYS_OH	.7.4	3,2
				SYS_OH	.7.12	3,15
				SYS_OH	.7.15	3,20
				SYS_OH	.7.16	3,19
				SYS_OH	.7.22	3,22
				SYS_OH	.7.23	3,23
				SYS_OH	.7.24	3,26
				SYS_OH	.7.25	3,25
				SYS_OH	.7.33	3,28
				SYS_OH	.7.34	3,29
				SYS_OH	.7.37	3,31
				SYS_OH	.7.38	3,32
				SHUTDOWN	.8.6	3,39
				SHUTDOWN	.8.8	3,38
				SHUTDOWN	.8.11	3,32
				SHUTDOWN	.8.16	3,51
				SHUTDOWN	.8.17	3,50
				SHUTDOWN	.8.20	3,1
				SHUTDOWN	.8.22	3,2
				SHUTDOWN	.8.24	3,3
				SHUTDOWN	.8.32	3,63
				SHUTDOWN	.8.33	3,62
				SHUTDOWN	.8.34	3,4
				SHUTDOWN	.8.35	3,6
				SHUTDOWN	.8.69	3,20
				SHUTDOWN	.8.72	3,19
				SHUTDOWN	.8.94	3,9
				SHUTDOWN	.8.95	3,10
				SHUTDOWN	.8.102	11,90
				SHUTDOWN	.8.103	11,86
				SHUTDOWN	.8.104	11,89
				SHUTDOWN	.8.105	11,85
				SHUTDOWN	.8.108	11,76
				SHUTDOWN	.8.109	11,81
				SHUTDOWN	.8.120	3,11
				SHUTDOWN	.8.127	3,94
				SHUTDOWN	.8.128	3,95
				SHUTDOWN	.8.129	3,96
				SHUTDOWN	.8.130	3,97
				SHUTDOWN	.8.131	3,98
				SHUTDOWN	.8.138	3,14
				SHUTDOWN	.8.149	3,15
				SHUTDOWN	.8.150	3,16
				SHUTDOWN	.8.154	3,22
				SHUTDOWN	.8.155	19,22
				SHUTDOWN	.8.160	3,33
				SHUTDOWN	.8.162	3,110
				SHUTDOWN	.8.164	3,116
				SHUTDOWN	.8.166	3,119
				SHUTDOWN	.8.170	3,118

table continued...

EFB usage

Name	Version	Kind	EFB Library	Used in section	Instance	at
NO_CONTACT	3/24/1997 14:20:55	FUNCT	IEC_LAD	DISCHARGE_WETWELL_AND_PUMP	.5.270	27,6
				DISCHARGE_WETWELL_AND_PUMP	.5.272	3,6
				DISCHARGE_WETWELL_AND_PUMP	.5.274	27,3
				DISCHARGE_WETWELL_AND_PUMP	.5.275	3,3
				DISCHARGE_WETWELL_AND_PUMP	.5.277	3,1
				DISCHARGE_WETWELL_AND_PUMP	.5.279	3,10
				DISCHARGE_WETWELL_AND_PUMP	.5.280	3,9
				DISCHARGE_WETWELL_AND_PUMP	.5.283	11,25
				DISCHARGE_WETWELL_AND_PUMP	.5.285	11,24
				DISCHARGE_WETWELL_AND_PUMP	.5.290	3,37
				DISCHARGE_WETWELL_AND_PUMP	.5.291	19,37
				DISCHARGE_WETWELL_AND_PUMP	.5.304	19,38
				DISCHARGE_WETWELL_AND_PUMP	.5.336	19,14
				DISCHARGE_WETWELL_AND_PUMP	.5.337	3,27
				DISCHARGE_WETWELL_AND_PUMP	.5.345	3,51
				DISCHARGE_WETWELL_AND_PUMP	.5.347	3,18
				DISCHARGE_WETWELL_AND_PUMP	.5.354	27,24
				AIR_STRIPPER	.4.82	3,0
				AIR_STRIPPER	.4.84	3,2
				AIR_STRIPPER	.4.85	27,2
				AIR_STRIPPER	.4.87	3,5
				AIR_STRIPPER	.4.89	27,5
				AIR_STRIPPER	.4.93	3,
				AIR_STRIPPER	.4.94	3,31
				AIR_STRIPPER	.4.101	3,20
				AIR_STRIPPER	.4.109	3,52
				AIR_STRIPPER	.4.110	3,53
				AIR_STRIPPER	.4.113	3,69
				AIR_STRIPPER	.4.125	3,25
				AIR_STRIPPER	.4.132	3,34
				AIR_STRIPPER	.4.142	3,29
				AIR_STRIPPER	.4.145	3,32
				AIR_STRIPPER	.4.150	3,35
				AIR_STRIPPER	.4.155	3,71
				AIR_STRIPPER	.4.163	3,38
				AIR_STRIPPER	.4.170	3,50
				AIR_STRIPPER	.4.175	3,46
				AIR_STRIPPER	.4.180	11,57
				AIR_STRIPPER	.4.191	3,62
				AIR_STRIPPER	.4.192	3,70
				BAGFILTER_SCALENT_VGAC	.3.22	11,18
				BAGFILTER_SCALENT_VGAC	.3.23	11,22
				BAGFILTER_SCALENT_VGAC	.3.120	11,58
				BAGFILTER_SCALENT_VGAC	.3.30	11,10
				BAGFILTER_SCALENT_VGAC	.3.31	11,15
				BAGFILTER_SCALENT_VGAC	.3.41	35,26
				BAGFILTER_SCALENT_VGAC	.3.44	35,27
				BAGFILTER_SCALENT_VGAC	.3.45	35,28
				BAGFILTER_SCALENT_VGAC	.3.46	35
				BAGFILTER_SCALENT_VGAC	.3.47	35

table continued...

EFB usage

Name	Version	Kind	EFB Library	Used in section	Instance	at
NO_CONTACT	3/24/1997 14:20:55	FUNCT	IEC_LAD	BAGFILTER_SCALENT_VGAC	.3.61	11,49
				BAGFILTER_SCALENT_VGAC	.3.62	11,44
				BAGFILTER_SCALENT_VGAC	.3.72	11,53
				BAGFILTER_SCALENT_VGAC	.3.79	11,32
				BAGFILTER_SCALENT_VGAC	.3.100	11,54
				BAGFILTER_SCALENT_VGAC	.3.112	11,19
				BAGFILTER_SCALENT_VGAC	.3.113	11,23
				BAGFILTER_SCALENT_VGAC	.3.119	11,57
				BAGFILTER_SCALENT_VGAC	.3.123	35,32
				EXTRACTION_WELLS	.2.282	43,168
				EXTRACTION_WELLS	.2.296	59,180
				EXTRACTION_WELLS	.2.307	59,194
				EXTRACTION_WELLS	.2.310	59,205
				EXTRACTION_WELLS	.2.315	59,216
				EXTRACTION_WELLS	.2.327	67,168
				EXTRACTION_WELLS	.2.328	75,180
				EXTRACTION_WELLS	.2.329	75,194
				EXTRACTION_WELLS	.2.330	75,205
				EXTRACTION_WELLS	.2.331	75,216
				EXTRACTION_WELLS	.2.332	3,223
				EXTRACTION_WELLS	.2.333	3,224
				EXTRACTION_WELLS	.2.334	3,225
				EXTRACTION_WELLS	.2.335	3,226
				EXTRACTION_WELLS	.2.336	3,227
				EXTRACTION_WELLS	.2.346	3,1
				EXTRACTION_WELLS	.2.347	3,5
				EXTRACTION_WELLS	.2.365	3,11
				EXTRACTION_WELLS	.2.367	3,12
				EXTRACTION_WELLS	.2.435	19,1
				EXTRACTION_WELLS	.2.438	67,14
				EXTRACTION_WELLS	.2.439	59,41
				EXTRACTION_WELLS	.2.440	19,28
				EXTRACTION_WELLS	.2.447	3,39
				EXTRACTION_WELLS	.2.449	3,38
				EXTRACTION_WELLS	.2.456	3,32
				EXTRACTION_WELLS	.2.457	3,28
				EXTRACTION_WELLS	.2.462	3,56
				EXTRACTION_WELLS	.2.463	3,60
				EXTRACTION_WELLS	.2.470	3,66
				EXTRACTION_WELLS	.2.472	3,67
				EXTRACTION_WELLS	.2.479	19,56
				EXTRACTION_WELLS	.2.480	51,69
				EXTRACTION_WELLS	.2.481	51,97
				EXTRACTION_WELLS	.2.482	19,84
				EXTRACTION_WELLS	.2.489	3,95
				EXTRACTION_WELLS	.2.491	3,94
				EXTRACTION_WELLS	.2.498	3,88
				EXTRACTION_WELLS	.2.499	3,84
				EXTRACTION_WELLS	.2.504	3,110
				EXTRACTION_WELLS	.2.505	3,114

table continued...

EFB usage

Name	Version	Kind	EFB Library	Used in section	Instance	at
NO_CONTACT	3/24/1997 14:20:55	FUNCT	IEC_LAD	EXTRACTION_WELLS	.2.512	3,120
				EXTRACTION_WELLS	.2.514	3,121
				EXTRACTION_WELLS	.2.521	19,110
				EXTRACTION_WELLS	.2.522	51,123
				EXTRACTION_WELLS	.2.523	27,97
				EXTRACTION_WELLS	.2.525	35,14
				EXTRACTION_WELLS	.2.526	35,41
				EXTRACTION_WELLS	.2.527	27,69
				EXTRACTION_WELLS	.2.529	27,123
				EXTRACTION_WELLS	.2.530	3,152
				EXTRACTION_WELLS	.2.544	67,143
				EXTRACTION_WELLS	.2.545	67,144
				EXTRACTION_WELLS	.2.546	67,145
				EXTRACTION_WELLS	.2.547	67,146
				EXTRACTION_WELLS	.2.548	67,147
				EXTRACTION_WELLS	.2.556	3,23
				EXTRACTION_WELLS	.2.559	3,51
				EXTRACTION_WELLS	.2.569	3,79
				EXTRACTION_WELLS	.2.570	3,106
				EXTRACTION_WELLS	.2.581	3,132
				EXTRACTION_WELLS	.2.584	3,24
				EXTRACTION_WELLS	.2.589	3,52
				EXTRACTION_WELLS	.2.592	3,
				EXTRACTION_WELLS	.2.595	3,107
				EXTRACTION_WELLS	.2.598	3,133
				AD_ALARMS	.6.1	11,6
				AD_ALARMS	.6.2	11,7
				AD_ALARMS	.6.3	11,8
				AD_ALARMS	.6.4	11,9
				AD_ALARMS	.6.6	11,10
				AD_ALARMS	.6.25	11,23
				AD_ALARMS	.6.26	11,24
				AD_ALARMS	.6.27	11,25
				AD_ALARMS	.6.28	11,26
				AD_ALARMS	.6.30	11,27
				AD_ALARMS	.6.46	11,30
				AD_ALARMS	.6.47	11,29
				AD_ALARMS	.6.48	11,32
				AD_ALARMS	.6.49	11,33
				AD_ALARMS	.6.57	11,35
				AD_ALARMS	.6.58	11,37
				AD_ALARMS	.6.62	11,38
				AD_ALARMS	.6.64	11,40
				AD_ALARMS	.6.68	11,42
				AD_ALARMS	.6.71	11,44
				AD_ALARMS	.6.73	11,46
				AD_ALARMS	.6.75	11,50
				AD_ALARMS	.6.79	11,52
				AD_ALARMS	.6.83	11
				AD_ALARMS	.6.95	1

table continued...

EFB usage

Name	Version	Kind	EFB Library	Used in section	Instance	at
NO_CONTACT	3/24/1997 14:20:55	FUNCT	IEC_LAD	AD_ALARMS	.6.97	11,17
				AD_ALARMS	.6.98	11,18
				AD_ALARMS	.6.99	11,19
				AD_ALARMS	.6.100	11,20
				AD_ALARMS	.6.102	11,57
				AD_ALARMS	.6.110	11,51
COIL	3/24/1997 14:20:55	FB	IEC_LAD	SYS_OH	FBI_7_2	99,3
				SYS_OH	FBI_7_9	99,7
				SYS_OH	FBI_7_19	99,20
				SYS_OH	FBI_7_20	99,23
				SYS_OH	FBI_7_26	99,26
				SYS_OH	FBI_7_31	99,29
				SYS_OH	FBI_7_35	99,32
				SHUTDOWN	FBI_8_3	99,1
				SHUTDOWN	FBI_8_7	99,38
				SHUTDOWN	FBI_8_15	99,50
				SHUTDOWN	FBI_8_29	99,62
				SHUTDOWN	FBI_8_96	91,89
				SHUTDOWN	FBI_8_97	91,85
				SHUTDOWN	FBI_8_126	91,94
				SHUTDOWN	FBI_8_143	91,106
				SHUTDOWN	FBI_8_157	99,22
				SHUTDOWN	FBI_8_165	91,118
				DISCHARGE_WETWELL_AND_PUMP	FBI_5_271	91,6
				DISCHARGE_WETWELL_AND_PUMP	FBI_5_273	91,3
				DISCHARGE_WETWELL_AND_PUMP	FBI_5_276	91,1
				DISCHARGE_WETWELL_AND_PUMP	FBI_5_293	91,37
				DISCHARGE_WETWELL_AND_PUMP	FBI_5_295	91,40
				DISCHARGE_WETWELL_AND_PUMP	FBI_5_296	91,9
				DISCHARGE_WETWELL_AND_PUMP	FBI_5_333	91,24
				DISCHARGE_WETWELL_AND_PUMP	FBI_5_340	91,27
				DISCHARGE_WETWELL_AND_PUMP	FBI_5_359	99,64
				AIR_STRIPPER	FBI_4_83	75,0
				AIR_STRIPPER	FBI_4_86	75,2
				AIR_STRIPPER	FBI_4_88	75,5
				AIR_STRIPPER	FBI_4_103	83,50
				AIR_STRIPPER	FBI_4_111	83,52
				AIR_STRIPPER	FBI_4_141	83,28
				AIR_STRIPPER	FBI_4_149	83,31
				AIR_STRIPPER	FBI_4_154	83,34
				AIR_STRIPPER	FBI_4_159	83,69
				AIR_STRIPPER	FBI_4_167	59,38
				AIR_STRIPPER	FBI_4_178	83,46
				BAGFILTER_SCALENT_VGAC	FBI_3_57	91,26
				BAGFILTER_SCALENT_VGAC	FBI_3_98	75,53
				BAGFILTER_SCALENT_VGAC	FBI_3_108	75,57
				BAGFILTER_SCALENT_VGAC	FBI_3_116	75,18
				BAGFILTER_SCALENT_VGAC	FBI_3_117	75,22
				EXTRACTION_WELLS	FBI_2_339	171,1
				EXTRACTION_WELLS	FBI_2_364	171,11

table continued...

EFB usage

Name	Version	Kind	EFB Library	Used in section	Instance	at
COIL	3/24/1997 14:20:55	FB	IEC_LAD	EXTRACTION_WELLS	FBI_2_434	171,14
				EXTRACTION_WELLS	FBI_2_441	171,41
				EXTRACTION_WELLS	FBI_2_450	171,38
				EXTRACTION_WELLS	FBI_2_459	171,28
				EXTRACTION_WELLS	FBI_2_460	171,56
				EXTRACTION_WELLS	FBI_2_469	171,66
				EXTRACTION_WELLS	FBI_2_478	171,69
				EXTRACTION_WELLS	FBI_2_483	171,97
				EXTRACTION_WELLS	FBI_2_492	171,94
				EXTRACTION_WELLS	FBI_2_501	171,84
				EXTRACTION_WELLS	FBI_2_502	171,110
				EXTRACTION_WELLS	FBI_2_511	171,120
				EXTRACTION_WELLS	FBI_2_520	171,123
				EXTRACTION_WELLS	FBI_2_553	171,23
				EXTRACTION_WELLS	FBI_2_555	171,18
				EXTRACTION_WELLS	FBI_2_560	171,46
				EXTRACTION_WELLS	FBI_2_562	171,51
				EXTRACTION_WELLS	FBI_2_566	171,79
				EXTRACTION_WELLS	FBI_2_568	171,74
				EXTRACTION_WELLS	FBI_2_571	171,101
				EXTRACTION_WELLS	FBI_2_573	171,106
				EXTRACTION_WELLS	FBI_2_578	171,[illegible]
				EXTRACTION_WELLS	FBI_2_580	17[illegible]
				AD_ALARMS	FBI_6_5	123,6
				AD_ALARMS	FBI_6_29	123,23
				AD_ALARMS	FBI_6_41	123,29
				AD_ALARMS	FBI_6_50	123,32
				AD_ALARMS	FBI_6_55	123,35
				AD_ALARMS	FBI_6_59	123,37
				AD_ALARMS	FBI_6_63	123,40
				AD_ALARMS	FBI_6_69	123,42
				AD_ALARMS	FBI_6_70	123,44
				AD_ALARMS	FBI_6_72	123,46
				AD_ALARMS	FBI_6_74	123,48
				AD_ALARMS	FBI_6_77	123,50
				AD_ALARMS	FBI_6_78	123,52
				AD_ALARMS	FBI_6_81	123,54
				AD_ALARMS	FBI_6_82	123,56
RESET_COIL	3/24/1997 14:20:55	FB	IEC_LAD	SYS_OH	FBI_7_5	99,2
				SYS_OH	FBI_7_17	99,19
				SYS_OH	FBI_7_21	99,22
				SYS_OH	FBI_7_27	99,25
				SYS_OH	FBI_7_32	99,28
				SYS_OH	FBI_7_36	99,31
TON	3/24/1997 14:20:55	FB	IEC	SYS_OH	FBI_7_6	59,5
				SHUTDOWN	FBI_8_18	91,44
				SHUTDOWN	FBI_8_106	67,74
				SHUTDOWN	FBI_8_107	67,79
				SHUTDOWN	FBI_8_169	83,[illegible]
				DISCHARGE_WETWELL_AND_PUMP	FBI_5_39	91[illegible]

table continued...

EFB usage

Name	Version	Kind	EFB Library	Used in section	Instance	at
TON	3/24/1997 14:20:55	FB	IEC	DISCHARGE_WETWELL_AND_PUMP	FBI_5_348	51,16
				AIR_STRIPPER	FBI_4_31	67,18
				AIR_STRIPPER	FBI_4_33	67,23
				AIR_STRIPPER	FBI_4_55	75,54
				AIR_STRIPPER	FBI_4_164	51,36
				AIR_STRIPPER	FBI_4_190	51,60
				BAGFILTER_SCALENT_VGAC	FBI_3_17	67,8
				BAGFILTER_SCALENT_VGAC	FBI_3_19	67,13
				BAGFILTER_SCALENT_VGAC	FBI_3_63	67,47
				BAGFILTER_SCALENT_VGAC	FBI_3_64	67,42
				EXTRACTION_WELLS	FBI_2_280	27,167
				EXTRACTION_WELLS	FBI_2_298	43,179
				EXTRACTION_WELLS	FBI_2_305	43,193
				EXTRACTION_WELLS	FBI_2_312	43,204
				EXTRACTION_WELLS	FBI_2_317	43,215
				EXTRACTION_WELLS	p	91,3
				EXTRACTION_WELLS	FBI_2_455	91,30
				EXTRACTION_WELLS	FBI_2_464	91,58
				EXTRACTION_WELLS	FBI_2_497	91,86
				EXTRACTION_WELLS	FBI_2_506	91,112
				EXTRACTION_WELLS	FBI_2_554	155,16
				EXTRACTION_WELLS	FBI_2_561	155,44
				EXTRACTION_WELLS	FBI_2_567	155,72
				EXTRACTION_WELLS	FBI_2_572	155,99
				EXTRACTION_WELLS	FBI_2_579	155,125
NC_CONTACT	3/24/1997 14:20:55	FUNCT	IEC_LAD	SYS_OH	.7.7	3,7
				SYS_OH	.7.30	19,7
				SHUTDOWN	.8.4	19,39
				SHUTDOWN	.8.14	19,51
				SHUTDOWN	.8.31	19,63
				SHUTDOWN	.8.73	35,20
				SHUTDOWN	.8.100	27,90
				SHUTDOWN	.8.101	27,86
				SHUTDOWN	.8.117	3,7
				SHUTDOWN	.8.119	3,8
				SHUTDOWN	.8.139	3,12
				SHUTDOWN	.8.140	3,13
				SHUTDOWN	.8.147	3,108
				SHUTDOWN	.8.158	19,20
				SHUTDOWN	.8.159	3,5
				SHUTDOWN	.8.163	19,110
				SHUTDOWN	.8.167	19,119
				DISCHARGE_WETWELL_AND_PUMP	.5.278	27,1
				DISCHARGE_WETWELL_AND_PUMP	.5.292	67,37
				DISCHARGE_WETWELL_AND_PUMP	.5.294	3,40
				DISCHARGE_WETWELL_AND_PUMP	.5.298	19,13
				DISCHARGE_WETWELL_AND_PUMP	.5.307	27,9
				DISCHARGE_WETWELL_AND_PUMP	.5.334	27,25
				DISCHARGE_WETWELL_AND_PUMP	.5.339	19,27
				DISCHARGE_WETWELL_AND_PUMP	.5.349	27,18

table continued...

EFB usage

Name	Version	Kind	EFB Library	Used in section	Instance	at
NC_CONTACT	3/24/1997 14:20:55	FUNCT	IEC_LAD	DISCHARGE_WETWELL_AND_PUMP	.5.355	11,67
				AIR_STRIPPER	.4.119	27,0
				AIR_STRIPPER	.4.122	11,56
				AIR_STRIPPER	.4.131	19,50
				AIR_STRIPPER	.4.143	27,29
				AIR_STRIPPER	.4.146	27,32
				AIR_STRIPPER	.4.151	27,35
				AIR_STRIPPER	.4.156	27,71
				AIR_STRIPPER	.4.176	19,46
				AIR_STRIPPER	.4.189	27,62
				BAGFILTER_SCALENT_VGAC	.3.121	35,58
				BAGFILTER_SCALENT_VGAC	.3.73	59,26
				BAGFILTER_SCALENT_VGAC	.3.74	59,27
				BAGFILTER_SCALENT_VGAC	.3.77	11,26
				BAGFILTER_SCALENT_VGAC	.3.101	35,54
				BAGFILTER_SCALENT_VGAC	.3.110	35,19
				BAGFILTER_SCALENT_VGAC	.3.111	35,23
				EXTRACTION_WELLS	.2.283	11,169
				EXTRACTION_WELLS	.2.299	11,181
				EXTRACTION_WELLS	.2.304	11,195
				EXTRACTION_WELLS	.2.313	11,206
				EXTRACTION_WELLS	.2.318	11,
				EXTRACTION_WELLS	.2.345	35,
				EXTRACTION_WELLS	.2.350	27,5
				EXTRACTION_WELLS	.2.368	11,12
				EXTRACTION_WELLS	.2.427	3,14
				EXTRACTION_WELLS	.2.428	11,14
				EXTRACTION_WELLS	.2.443	11,41
				EXTRACTION_WELLS	.2.444	3,41
				EXTRACTION_WELLS	.2.446	11,39
				EXTRACTION_WELLS	.2.454	27,32
				EXTRACTION_WELLS	.2.458	35,28
				EXTRACTION_WELLS	.2.461	35,56
				EXTRACTION_WELLS	.2.465	27,60
				EXTRACTION_WELLS	.2.473	11,67
				EXTRACTION_WELLS	.2.475	3,69
				EXTRACTION_WELLS	.2.476	11,69
				EXTRACTION_WELLS	.2.485	11,97
				EXTRACTION_WELLS	.2.486	3,97
				EXTRACTION_WELLS	.2.488	11,95
				EXTRACTION_WELLS	.2.496	27,88
				EXTRACTION_WELLS	.2.500	35,84
				EXTRACTION_WELLS	.2.503	35,110
				EXTRACTION_WELLS	.2.507	27,114
				EXTRACTION_WELLS	.2.515	11,121
				EXTRACTION_WELLS	.2.517	3,123
				EXTRACTION_WELLS	.2.518	11,123
				EXTRACTION_WELLS	.2.558	91,14
				EXTRACTION_WELLS	.2.564	91
				EXTRACTION_WELLS	.2.575	91

table continued...

EFB usage

Name	Version	Kind	EFB Library	Used in section	Instance	at
NC_CONTACT	3/24/1997 14:20:55	FUNCT	IEC_LAD	EXTRACTION_WELLS	.2.576	91,97
				EXTRACTION_WELLS	.2.583	91,123
				EXTRACTION_WELLS	.2.585	19,24
				EXTRACTION_WELLS	.2.588	19,52
				EXTRACTION_WELLS	.2.591	19,80
				EXTRACTION_WELLS	.2.594	19,107
				EXTRACTION_WELLS	.2.597	19,133
				AD_ALARMS	.6.89	11,11
				AD_ALARMS	.6.90	11,12
				AD_ALARMS	.6.91	11,13
				AD_ALARMS	.6.92	11,14
				AD_ALARMS	.6.93	11,15
				AD_ALARMS	.6.94	11,54
				AD_ALARMS	.6.109	11,48
OR_BOOL	3/24/1997 14:20:55	FUNCT	IEC	SYS_OH	.7.11	97,9
				DAILY_FLOW_TOTAL_STORAGE_01	.15.2	32,3
				DAILY_FLOW_TOTAL_STORAGE_01	.15.5	32,18
				DAILY_FLOW_TOTAL_STORAGE_01	.15.8	32,33
				DAILY_FLOW_TOTAL_STORAGE_01	.15.11	32,48
				DAILY_FLOW_TOTAL_STORAGE_01	.15.14	32,63
				DAILY_FLOW_TOTAL_STORAGE_01	.15.17	32,78
				DAILY_FLOW_TOTAL_STORAGE_01	.15.20	107,3
				DAILY_FLOW_TOTAL_STORAGE_01	.15.23	107,18
				DAILY_FLOW_TOTAL_STORAGE_01	.15.26	107,33
				DAILY_FLOW_TOTAL_STORAGE_01	.15.29	107,48
				DAILY_FLOW_TOTAL_STORAGE_01	.15.32	107,63
				DAILY_FLOW_TOTAL_STORAGE_01	.15.35	107,78
				DAILY_FLOW_TOTAL_STORAGE_01	.15.38	182,3
				DAILY_FLOW_TOTAL_STORAGE_01	.15.41	182,18
				DAILY_FLOW_TOTAL_STORAGE_01	.15.44	182,33
				DAILY_FLOW_TOTAL_STORAGE_01	.15.47	182,48
				DAILY_FLOW_TOTAL_STORAGE_01	.15.50	182,63
				DAILY_FLOW_TOTAL_STORAGE_01	.15.53	182,78
				DAILY_FLOW_TOTAL_STORAGE_01	.15.56	257,3
				DAILY_FLOW_TOTAL_STORAGE_01	.15.59	257,18
				DAILY_FLOW_TOTAL_STORAGE_01	.15.62	257,33
				DAILY_FLOW_TOTAL_STORAGE_01	.15.65	257,48
				DAILY_FLOW_TOTAL_STORAGE_01	.15.68	257,63
				DAILY_FLOW_TOTAL_STORAGE_01	.15.71	257,78
				DAILY_FLOW_TOTAL_STORAGE_01	.15.74	32,103
				DAILY_FLOW_TOTAL_STORAGE_01	.15.77	32,118
				DAILY_FLOW_TOTAL_STORAGE_01	.15.80	32,133
				DAILY_FLOW_TOTAL_STORAGE_01	.15.83	32,148
				DAILY_FLOW_TOTAL_STORAGE_01	.15.86	32,163
				DAILY_FLOW_TOTAL_STORAGE_01	.15.89	32,178
				DAILY_FLOW_TOTAL_STORAGE_01	.15.92	107,103
				DAILY_FLOW_TOTAL_STORAGE_01	.15.95	107,118
				DAILY_FLOW_TOTAL_STORAGE_01	.15.98	107,133
				DAILY_FLOW_TOTAL_STORAGE_01	.15.101	107,148
				DAILY_FLOW_TOTAL_STORAGE_01	.15.104	107,163

table continued...

EFB usage

Name	Version	Kind	EFB Library	Used in section	Instance	at
OR_BOOL	3/24/1997 14:20:55	FUNCT	IEC	DAILY_FLOW_TOTAL_STORAGE_01	.15.107	107,178
				DAILY_FLOW_TOTAL_STORAGE_01	.15.110	182,103
				DAILY_FLOW_TOTAL_STORAGE_01	.15.113	182,118
				DAILY_FLOW_TOTAL_STORAGE_01	.15.116	182,133
				DAILY_FLOW_TOTAL_STORAGE_01	.15.119	182,148
				DAILY_FLOW_TOTAL_STORAGE_01	.15.122	182,163
				DAILY_FLOW_TOTAL_STORAGE_01	.15.125	182,178
				DAILY_FLOW_TOTAL_STORAGE_01	.15.128	257,103
				DAILY_FLOW_TOTAL_STORAGE_01	.15.131	257,118
				DAILY_FLOW_TOTAL_STORAGE_01	.15.134	257,133
				DAILY_FLOW_TOTAL_STORAGE_01	.15.137	257,148
				DAILY_FLOW_TOTAL_STORAGE_01	.15.140	257,163
				DAILY_FLOW_TOTAL_STORAGE_01	.15.143	257,178
				DAILY_FLOW_TOTAL_STORAGE_01	.15.146	32,203
				DAILY_FLOW_TOTAL_STORAGE_01	.15.149	32,218
				DAILY_FLOW_TOTAL_STORAGE_01	.15.152	107,203
				DAILY_FLOW_TOTAL_STORAGE_01	.15.155	107,218
				DAILY_FLOW_TOTAL_STORAGE_01	.15.158	182,203
				DAILY_FLOW_TOTAL_STORAGE_01	.15.161	182,218
				DAILY_FLOW_TOTAL_STORAGE_01	.15.164	257,203
				DAILY_FLOW_TOTAL_STORAGE_01	.15.167	257,218
				DAILY_FLOW_TOTAL_STORAGE_02	.16.2	32,
				DAILY_FLOW_TOTAL_STORAGE_02	.16.5	32,
				DAILY_FLOW_TOTAL_STORAGE_02	.16.8	32,33
				DAILY_FLOW_TOTAL_STORAGE_02	.16.11	32,48
				DAILY_FLOW_TOTAL_STORAGE_02	.16.14	32,63
				DAILY_FLOW_TOTAL_STORAGE_02	.16.17	32,78
				DAILY_FLOW_TOTAL_STORAGE_02	.16.20	107,3
				DAILY_FLOW_TOTAL_STORAGE_02	.16.23	107,18
				DAILY_FLOW_TOTAL_STORAGE_02	.16.26	107,33
				DAILY_FLOW_TOTAL_STORAGE_02	.16.29	107,48
				DAILY_FLOW_TOTAL_STORAGE_02	.16.32	107,63
				DAILY_FLOW_TOTAL_STORAGE_02	.16.35	107,78
				DAILY_FLOW_TOTAL_STORAGE_02	.16.38	182,3
				DAILY_FLOW_TOTAL_STORAGE_02	.16.41	182,18
				DAILY_FLOW_TOTAL_STORAGE_02	.16.44	182,33
				DAILY_FLOW_TOTAL_STORAGE_02	.16.47	182,48
				DAILY_FLOW_TOTAL_STORAGE_02	.16.50	182,63
				DAILY_FLOW_TOTAL_STORAGE_02	.16.53	182,78
				DAILY_FLOW_TOTAL_STORAGE_02	.16.56	257,3
				DAILY_FLOW_TOTAL_STORAGE_02	.16.59	257,18
				DAILY_FLOW_TOTAL_STORAGE_02	.16.62	257,33
				DAILY_FLOW_TOTAL_STORAGE_02	.16.65	257,48
				DAILY_FLOW_TOTAL_STORAGE_02	.16.68	257,63
				DAILY_FLOW_TOTAL_STORAGE_02	.16.71	257,78
				DAILY_FLOW_TOTAL_STORAGE_02	.16.74	32,103
				DAILY_FLOW_TOTAL_STORAGE_02	.16.77	32,118
				DAILY_FLOW_TOTAL_STORAGE_02	.16.80	32,133
				DAILY_FLOW_TOTAL_STORAGE_02	.16.83	32,
				DAILY_FLOW_TOTAL_STORAGE_02	.16.86	32,

table continued...

EFB usage

Name	Version	Kind	EFB Library	Used in section	Instance	at
OR_BOOL	3/24/1997 14:20:55	FUNCT	IEC	DAILY_FLOW_TOTAL_STORAGE_02	.16.89	32,178
				DAILY_FLOW_TOTAL_STORAGE_02	.16.92	107,103
				DAILY_FLOW_TOTAL_STORAGE_02	.16.95	107,118
				DAILY_FLOW_TOTAL_STORAGE_02	.16.98	107,133
				DAILY_FLOW_TOTAL_STORAGE_02	.16.101	107,148
				DAILY_FLOW_TOTAL_STORAGE_02	.16.104	107,163
				DAILY_FLOW_TOTAL_STORAGE_02	.16.107	107,178
				DAILY_FLOW_TOTAL_STORAGE_02	.16.110	182,103
				DAILY_FLOW_TOTAL_STORAGE_02	.16.113	182,118
				DAILY_FLOW_TOTAL_STORAGE_02	.16.116	182,133
				DAILY_FLOW_TOTAL_STORAGE_02	.16.119	182,148
				DAILY_FLOW_TOTAL_STORAGE_02	.16.122	182,163
				DAILY_FLOW_TOTAL_STORAGE_02	.16.125	182,178
				DAILY_FLOW_TOTAL_STORAGE_02	.16.128	257,103
				DAILY_FLOW_TOTAL_STORAGE_02	.16.131	257,118
				DAILY_FLOW_TOTAL_STORAGE_02	.16.134	257,133
				DAILY_FLOW_TOTAL_STORAGE_02	.16.137	257,148
				DAILY_FLOW_TOTAL_STORAGE_02	.16.140	257,163
				DAILY_FLOW_TOTAL_STORAGE_02	.16.143	257,178
				DAILY_FLOW_TOTAL_STORAGE_02	.16.146	32,203
				DAILY_FLOW_TOTAL_STORAGE_02	.16.149	32,218
				DAILY_FLOW_TOTAL_STORAGE_02	.16.152	107,203
				DAILY_FLOW_TOTAL_STORAGE_02	.16.155	107,218
				DAILY_FLOW_TOTAL_STORAGE_02	.16.158	182,203
				DAILY_FLOW_TOTAL_STORAGE_02	.16.161	182,218
				DAILY_FLOW_TOTAL_STORAGE_02	.16.164	257,203
				DAILY_FLOW_TOTAL_STORAGE_02	.16.167	257,218
				DAILY_FLOW_TOTAL_STORAGE_03	.17.2	32,3
				DAILY_FLOW_TOTAL_STORAGE_03	.17.5	32,18
				DAILY_FLOW_TOTAL_STORAGE_03	.17.8	32,33
				DAILY_FLOW_TOTAL_STORAGE_03	.17.11	32,48
				DAILY_FLOW_TOTAL_STORAGE_03	.17.14	32,63
				DAILY_FLOW_TOTAL_STORAGE_03	.17.17	32,78
				DAILY_FLOW_TOTAL_STORAGE_03	.17.20	107,3
				DAILY_FLOW_TOTAL_STORAGE_03	.17.23	107,18
				DAILY_FLOW_TOTAL_STORAGE_03	.17.26	107,33
				DAILY_FLOW_TOTAL_STORAGE_03	.17.29	107,48
				DAILY_FLOW_TOTAL_STORAGE_03	.17.32	107,63
				DAILY_FLOW_TOTAL_STORAGE_03	.17.35	107,78
				SHUTDOWN	.8.5	33,40
				SHUTDOWN	.8.13	33,52
				SHUTDOWN	.8.30	41,64
				SHUTDOWN	.8.37	49,3
				SHUTDOWN	.8.98	41,87
				SHUTDOWN	.8.99	41,91
				SHUTDOWN	.8.135	17,96
				SHUTDOWN	.8.146	65,108
				SHUTDOWN	.8.161	17,34
				SHUTDOWN	.8.171	33,120
				DISCHARGE_WETWELL_AND_PUMP	.5.297	33,15

table continued...

EFB usage

Name	Version	Kind	EFB Library	Used in section	Instance	at
OR_BOOL	3/24/1997 14:20:55	FUNCT	IEC	DISCHARGE_WETWELL_AND_PUMP	.5.300	9,11
				DISCHARGE_WETWELL_AND_PUMP	.5.302	49,39
				DISCHARGE_WETWELL_AND_PUMP	.5.303	17,39
				DISCHARGE_WETWELL_AND_PUMP	.5.335	41,26
				DISCHARGE_WETWELL_AND_PUMP	.5.346	17,15
				DISCHARGE_WETWELL_AND_PUMP	.5.356	73,66
				AIR_STRIPPER	.4.120	33,58
				AIR_STRIPPER	.4.121	9,58
				AIR_STRIPPER	.4.129	25,54
				AIR_STRIPPER	.4.144	41,30
				AIR_STRIPPER	.4.147	41,33
				AIR_STRIPPER	.4.152	41,36
				AIR_STRIPPER	.4.157	41,71
				BAGFILTER_SCALENT_VGAC	.3.122	49,59
				BAGFILTER_SCALENT_VGAC	.3.52	41,28
				BAGFILTER_SCALENT_VGAC	.3.56	33,28
				BAGFILTER_SCALENT_VGAC	.3.75	65,28
				BAGFILTER_SCALENT_VGAC	.3.76	57,28
				BAGFILTER_SCALENT_VGAC	.3.78	81,28
				BAGFILTER_SCALENT_VGAC	.3.102	49,55
				BAGFILTER_SCALENT_VGAC	.3.114	49,24
				BAGFILTER_SCALENT_VGAC	.3.115	49,2
				EXTRACTION_WELLS	.2.337	25
				EXTRACTION_WELLS	.2.366	25,13
				EXTRACTION_WELLS	.2.448	25,40
				EXTRACTION_WELLS	.2.471	25,68
				EXTRACTION_WELLS	.2.490	25,96
				EXTRACTION_WELLS	.2.513	25,122
				EXTRACTION_WELLS	.2.549	81,145
				EXTRACTION_WELLS	.2.551	65,145
				EXTRACTION_WELLS	.2.586	33,25
				EXTRACTION_WELLS	.2.587	33,53
				EXTRACTION_WELLS	.2.590	33,81
				EXTRACTION_WELLS	.2.593	33,108
				EXTRACTION_WELLS	.2.596	33,134
				AD_ALARMS	.6.17	33,8
				AD_ALARMS	.6.31	33,25
				AD_ALARMS	.6.39	33,31
				AD_ALARMS	.6.51	33,34
				AD_ALARMS	.6.87	33,39
				AD_ALARMS	.6.103	25,58
				AD_ALARMS	.6.107	25,52
MOVE	3/24/1997 14:20:55	FUNCT	IEC	DAILY_FLOW_TOTAL_STORAGE_01	.15.1	48,4
				DAILY_FLOW_TOTAL_STORAGE_01	.15.4	48,19
				DAILY_FLOW_TOTAL_STORAGE_01	.15.7	48,34
				DAILY_FLOW_TOTAL_STORAGE_01	.15.10	48,49
				DAILY_FLOW_TOTAL_STORAGE_01	.15.13	48,64
				DAILY_FLOW_TOTAL_STORAGE_01	.15.16	48,79
				DAILY_FLOW_TOTAL_STORAGE_01	.15.19	12
				DAILY_FLOW_TOTAL_STORAGE_01	.15.22	12

table continued...

EFB usage

Name	Version	Kind	EFB Library	Used in section	Instance	at
MOVE	3/24/1997 14:20:55	FUNCT	IEC	DAILY_FLOW_TOTAL_STORAGE_01	.15.25	123,34
				DAILY_FLOW_TOTAL_STORAGE_01	.15.28	123,49
				DAILY_FLOW_TOTAL_STORAGE_01	.15.31	123,64
				DAILY_FLOW_TOTAL_STORAGE_01	.15.34	123,79
				DAILY_FLOW_TOTAL_STORAGE_01	.15.37	198,4
				DAILY_FLOW_TOTAL_STORAGE_01	.15.40	198,19
				DAILY_FLOW_TOTAL_STORAGE_01	.15.43	198,34
				DAILY_FLOW_TOTAL_STORAGE_01	.15.46	198,49
				DAILY_FLOW_TOTAL_STORAGE_01	.15.49	198,64
				DAILY_FLOW_TOTAL_STORAGE_01	.15.52	198,79
				DAILY_FLOW_TOTAL_STORAGE_01	.15.55	273,4
				DAILY_FLOW_TOTAL_STORAGE_01	.15.58	273,19
				DAILY_FLOW_TOTAL_STORAGE_01	.15.61	273,34
				DAILY_FLOW_TOTAL_STORAGE_01	.15.64	273,49
				DAILY_FLOW_TOTAL_STORAGE_01	.15.67	273,64
				DAILY_FLOW_TOTAL_STORAGE_01	.15.70	273,79
				DAILY_FLOW_TOTAL_STORAGE_01	.15.73	48,104
				DAILY_FLOW_TOTAL_STORAGE_01	.15.76	48,119
				DAILY_FLOW_TOTAL_STORAGE_01	.15.79	48,134
				DAILY_FLOW_TOTAL_STORAGE_01	.15.82	48,149
				DAILY_FLOW_TOTAL_STORAGE_01	.15.85	48,164
				DAILY_FLOW_TOTAL_STORAGE_01	.15.88	48,179
				DAILY_FLOW_TOTAL_STORAGE_01	.15.91	123,104
				DAILY_FLOW_TOTAL_STORAGE_01	.15.94	123,119
				DAILY_FLOW_TOTAL_STORAGE_01	.15.97	123,134
				DAILY_FLOW_TOTAL_STORAGE_01	.15.100	123,149
				DAILY_FLOW_TOTAL_STORAGE_01	.15.103	123,164
				DAILY_FLOW_TOTAL_STORAGE_01	.15.106	123,179
				DAILY_FLOW_TOTAL_STORAGE_01	.15.109	198,104
				DAILY_FLOW_TOTAL_STORAGE_01	.15.112	198,119
				DAILY_FLOW_TOTAL_STORAGE_01	.15.115	198,134
				DAILY_FLOW_TOTAL_STORAGE_01	.15.118	198,149
				DAILY_FLOW_TOTAL_STORAGE_01	.15.121	198,164
				DAILY_FLOW_TOTAL_STORAGE_01	.15.124	198,179
				DAILY_FLOW_TOTAL_STORAGE_01	.15.127	273,104
				DAILY_FLOW_TOTAL_STORAGE_01	.15.130	273,119
				DAILY_FLOW_TOTAL_STORAGE_01	.15.133	273,134
				DAILY_FLOW_TOTAL_STORAGE_01	.15.136	273,149
				DAILY_FLOW_TOTAL_STORAGE_01	.15.139	273,164
				DAILY_FLOW_TOTAL_STORAGE_01	.15.142	273,179
				DAILY_FLOW_TOTAL_STORAGE_01	.15.145	48,204
				DAILY_FLOW_TOTAL_STORAGE_01	.15.148	48,219
				DAILY_FLOW_TOTAL_STORAGE_01	.15.151	123,204
				DAILY_FLOW_TOTAL_STORAGE_01	.15.154	123,219
				DAILY_FLOW_TOTAL_STORAGE_01	.15.157	198,204
				DAILY_FLOW_TOTAL_STORAGE_01	.15.160	198,219
				DAILY_FLOW_TOTAL_STORAGE_01	.15.163	273,204
				DAILY_FLOW_TOTAL_STORAGE_01	.15.166	273,219
				DAILY_FLOW_TOTAL_STORAGE_02	.16.1	48,4
				DAILY_FLOW_TOTAL_STORAGE_02	.16.4	48,19

table continued...

EFB usage

Name	Version	Kind	EFB Library	Used in section	Instance	at
MOVE	3/24/1997 14:20:55	FUNCT	IEC	DAILY_FLOW_TOTAL_STORAGE_02	.16.7	48,34
				DAILY_FLOW_TOTAL_STORAGE_02	.16.10	48,49
				DAILY_FLOW_TOTAL_STORAGE_02	.16.13	48,64
				DAILY_FLOW_TOTAL_STORAGE_02	.16.16	48,79
				DAILY_FLOW_TOTAL_STORAGE_02	.16.19	123,4
				DAILY_FLOW_TOTAL_STORAGE_02	.16.22	123,19
				DAILY_FLOW_TOTAL_STORAGE_02	.16.25	123,34
				DAILY_FLOW_TOTAL_STORAGE_02	.16.28	123,49
				DAILY_FLOW_TOTAL_STORAGE_02	.16.31	123,64
				DAILY_FLOW_TOTAL_STORAGE_02	.16.34	123,79
				DAILY_FLOW_TOTAL_STORAGE_02	.16.37	198,4
				DAILY_FLOW_TOTAL_STORAGE_02	.16.40	198,19
				DAILY_FLOW_TOTAL_STORAGE_02	.16.43	198,34
				DAILY_FLOW_TOTAL_STORAGE_02	.16.46	198,49
				DAILY_FLOW_TOTAL_STORAGE_02	.16.49	198,64
				DAILY_FLOW_TOTAL_STORAGE_02	.16.52	198,79
				DAILY_FLOW_TOTAL_STORAGE_02	.16.55	273,4
				DAILY_FLOW_TOTAL_STORAGE_02	.16.58	273,19
				DAILY_FLOW_TOTAL_STORAGE_02	.16.61	273,34
				DAILY_FLOW_TOTAL_STORAGE_02	.16.64	273,49
				DAILY_FLOW_TOTAL_STORAGE_02	.16.67	273,64
				DAILY_FLOW_TOTAL_STORAGE_02	.16.70	273,7[illegible]
				DAILY_FLOW_TOTAL_STORAGE_02	.16.73	48[illegible]
				DAILY_FLOW_TOTAL_STORAGE_02	.16.76	48,119
				DAILY_FLOW_TOTAL_STORAGE_02	.16.79	48,134
				DAILY_FLOW_TOTAL_STORAGE_02	.16.82	48,149
				DAILY_FLOW_TOTAL_STORAGE_02	.16.85	48,164
				DAILY_FLOW_TOTAL_STORAGE_02	.16.88	48,179
				DAILY_FLOW_TOTAL_STORAGE_02	.16.91	123,104
				DAILY_FLOW_TOTAL_STORAGE_02	.16.94	123,119
				DAILY_FLOW_TOTAL_STORAGE_02	.16.97	123,134
				DAILY_FLOW_TOTAL_STORAGE_02	.16.100	123,149
				DAILY_FLOW_TOTAL_STORAGE_02	.16.103	123,164
				DAILY_FLOW_TOTAL_STORAGE_02	.16.106	123,179
				DAILY_FLOW_TOTAL_STORAGE_02	.16.109	198,104
				DAILY_FLOW_TOTAL_STORAGE_02	.16.112	198,119
				DAILY_FLOW_TOTAL_STORAGE_02	.16.115	198,134
				DAILY_FLOW_TOTAL_STORAGE_02	.16.118	198,149
				DAILY_FLOW_TOTAL_STORAGE_02	.16.121	198,164
				DAILY_FLOW_TOTAL_STORAGE_02	.16.124	198,179
				DAILY_FLOW_TOTAL_STORAGE_02	.16.127	273,104
				DAILY_FLOW_TOTAL_STORAGE_02	.16.130	273,119
				DAILY_FLOW_TOTAL_STORAGE_02	.16.133	273,134
				DAILY_FLOW_TOTAL_STORAGE_02	.16.136	273,149
				DAILY_FLOW_TOTAL_STORAGE_02	.16.139	273,164
				DAILY_FLOW_TOTAL_STORAGE_02	.16.142	273,179
				DAILY_FLOW_TOTAL_STORAGE_02	.16.145	48,204
				DAILY_FLOW_TOTAL_STORAGE_02	.16.148	48,219
				DAILY_FLOW_TOTAL_STORAGE_02	.16.151	12[illegible]
				DAILY_FLOW_TOTAL_STORAGE_02	.16.154	12[illegible]

table continued...

EFB usage

Name	Version	Kind	EFB Library	Used in section	Instance	at
MOVE	3/24/1997 14:20:55	FUNCT	IEC	DAILY_FLOW_TOTAL_STORAGE_02	.16.157	198,204
				DAILY_FLOW_TOTAL_STORAGE_02	.16.160	198,219
				DAILY_FLOW_TOTAL_STORAGE_02	.16.163	273,204
				DAILY_FLOW_TOTAL_STORAGE_02	.16.166	273,219
				DAILY_FLOW_TOTAL_STORAGE_03	.17.1	48,4
				DAILY_FLOW_TOTAL_STORAGE_03	.17.4	48,19
				DAILY_FLOW_TOTAL_STORAGE_03	.17.7	48,34
				DAILY_FLOW_TOTAL_STORAGE_03	.17.10	48,49
				DAILY_FLOW_TOTAL_STORAGE_03	.17.13	48,64
				DAILY_FLOW_TOTAL_STORAGE_03	.17.16	48,79
				DAILY_FLOW_TOTAL_STORAGE_03	.17.19	123,4
				DAILY_FLOW_TOTAL_STORAGE_03	.17.22	123,19
				DAILY_FLOW_TOTAL_STORAGE_03	.17.25	123,34
				DAILY_FLOW_TOTAL_STORAGE_03	.17.28	123,49
				DAILY_FLOW_TOTAL_STORAGE_03	.17.31	123,64
				DAILY_FLOW_TOTAL_STORAGE_03	.17.34	123,79
				SHUTDOWN	.8.9	91,34
				DISCHARGE_WETWELL_AND_PUMP	.5.344	91,53
				EXTRACTION_WELLS	.2.531	91,158
AND_BOOL	3/24/1997 14:20:55	FUNCT	IEC	DAILY_FLOW_TOTAL_STORAGE_01	.15.3	14,3
				DAILY_FLOW_TOTAL_STORAGE_01	.15.6	14,18
				DAILY_FLOW_TOTAL_STORAGE_01	.15.9	14,33
				DAILY_FLOW_TOTAL_STORAGE_01	.15.12	14,48
				DAILY_FLOW_TOTAL_STORAGE_01	.15.15	14,63
				DAILY_FLOW_TOTAL_STORAGE_01	.15.18	14,78
				DAILY_FLOW_TOTAL_STORAGE_01	.15.21	89,3
				DAILY_FLOW_TOTAL_STORAGE_01	.15.24	89,18
				DAILY_FLOW_TOTAL_STORAGE_01	.15.27	89,33
				DAILY_FLOW_TOTAL_STORAGE_01	.15.30	89,48
				DAILY_FLOW_TOTAL_STORAGE_01	.15.33	89,63
				DAILY_FLOW_TOTAL_STORAGE_01	.15.36	89,78
				DAILY_FLOW_TOTAL_STORAGE_01	.15.39	164,3
				DAILY_FLOW_TOTAL_STORAGE_01	.15.42	164,18
				DAILY_FLOW_TOTAL_STORAGE_01	.15.45	164,33
				DAILY_FLOW_TOTAL_STORAGE_01	.15.48	164,48
				DAILY_FLOW_TOTAL_STORAGE_01	.15.51	164,63
				DAILY_FLOW_TOTAL_STORAGE_01	.15.54	164,78
				DAILY_FLOW_TOTAL_STORAGE_01	.15.57	239,3
				DAILY_FLOW_TOTAL_STORAGE_01	.15.60	239,18
				DAILY_FLOW_TOTAL_STORAGE_01	.15.63	239,33
				DAILY_FLOW_TOTAL_STORAGE_01	.15.66	239,48
				DAILY_FLOW_TOTAL_STORAGE_01	.15.69	239,63
				DAILY_FLOW_TOTAL_STORAGE_01	.15.72	239,78
				DAILY_FLOW_TOTAL_STORAGE_01	.15.75	14,103
				DAILY_FLOW_TOTAL_STORAGE_01	.15.78	14,118
				DAILY_FLOW_TOTAL_STORAGE_01	.15.81	14,133
				DAILY_FLOW_TOTAL_STORAGE_01	.15.84	14,148
				DAILY_FLOW_TOTAL_STORAGE_01	.15.87	14,163
				DAILY_FLOW_TOTAL_STORAGE_01	.15.90	14,178
				DAILY_FLOW_TOTAL_STORAGE_01	.15.93	89,103

table continued...

EFB usage

Name	Version	Kind	EFB Library	Used in section	Instance	at
AND_BOOL	3/24/1997 14:20:55	FUNCT	IEC	DAILY_FLOW_TOTAL_STORAGE_01	.15.96	89,118
				DAILY_FLOW_TOTAL_STORAGE_01	.15.99	89,133
				DAILY_FLOW_TOTAL_STORAGE_01	.15.102	89,148
				DAILY_FLOW_TOTAL_STORAGE_01	.15.105	89,163
				DAILY_FLOW_TOTAL_STORAGE_01	.15.108	89,178
				DAILY_FLOW_TOTAL_STORAGE_01	.15.111	164,103
				DAILY_FLOW_TOTAL_STORAGE_01	.15.114	164,118
				DAILY_FLOW_TOTAL_STORAGE_01	.15.117	164,133
				DAILY_FLOW_TOTAL_STORAGE_01	.15.120	164,148
				DAILY_FLOW_TOTAL_STORAGE_01	.15.123	164,163
				DAILY_FLOW_TOTAL_STORAGE_01	.15.126	164,178
				DAILY_FLOW_TOTAL_STORAGE_01	.15.129	239,103
				DAILY_FLOW_TOTAL_STORAGE_01	.15.132	239,118
				DAILY_FLOW_TOTAL_STORAGE_01	.15.135	239,133
				DAILY_FLOW_TOTAL_STORAGE_01	.15.138	239,148
				DAILY_FLOW_TOTAL_STORAGE_01	.15.141	239,163
				DAILY_FLOW_TOTAL_STORAGE_01	.15.144	239,178
				DAILY_FLOW_TOTAL_STORAGE_01	.15.147	14,203
				DAILY_FLOW_TOTAL_STORAGE_01	.15.150	14,218
				DAILY_FLOW_TOTAL_STORAGE_01	.15.153	89,203
				DAILY_FLOW_TOTAL_STORAGE_01	.15.156	89,218
				DAILY_FLOW_TOTAL_STORAGE_01	.15.159	164,203
				DAILY_FLOW_TOTAL_STORAGE_01	.15.162	164,218
				DAILY_FLOW_TOTAL_STORAGE_01	.15.165	239,203
				DAILY_FLOW_TOTAL_STORAGE_01	.15.168	239,218
				DAILY_FLOW_TOTAL_STORAGE_02	.16.3	14,3
				DAILY_FLOW_TOTAL_STORAGE_02	.16.6	14,18
				DAILY_FLOW_TOTAL_STORAGE_02	.16.9	14,33
				DAILY_FLOW_TOTAL_STORAGE_02	.16.12	14,48
				DAILY_FLOW_TOTAL_STORAGE_02	.16.15	14,63
				DAILY_FLOW_TOTAL_STORAGE_02	.16.18	14,78
				DAILY_FLOW_TOTAL_STORAGE_02	.16.21	89,3
				DAILY_FLOW_TOTAL_STORAGE_02	.16.24	89,18
				DAILY_FLOW_TOTAL_STORAGE_02	.16.27	89,33
				DAILY_FLOW_TOTAL_STORAGE_02	.16.30	89,48
				DAILY_FLOW_TOTAL_STORAGE_02	.16.33	89,63
				DAILY_FLOW_TOTAL_STORAGE_02	.16.36	89,78
				DAILY_FLOW_TOTAL_STORAGE_02	.16.39	164,3
				DAILY_FLOW_TOTAL_STORAGE_02	.16.42	164,18
				DAILY_FLOW_TOTAL_STORAGE_02	.16.45	164,33
				DAILY_FLOW_TOTAL_STORAGE_02	.16.48	164,48
				DAILY_FLOW_TOTAL_STORAGE_02	.16.51	164,63
				DAILY_FLOW_TOTAL_STORAGE_02	.16.54	164,78
				DAILY_FLOW_TOTAL_STORAGE_02	.16.57	239,3
				DAILY_FLOW_TOTAL_STORAGE_02	.16.60	239,18
				DAILY_FLOW_TOTAL_STORAGE_02	.16.63	239,33
				DAILY_FLOW_TOTAL_STORAGE_02	.16.66	239,48
				DAILY_FLOW_TOTAL_STORAGE_02	.16.69	239,63
				DAILY_FLOW_TOTAL_STORAGE_02	.16.72	239,78
				DAILY_FLOW_TOTAL_STORAGE_02	.16.75	14,203

table continued...

EFB usage

Name	Version	Kind	EFB Library	Used in section	Instance	at
AND_BOOL	3/24/1997 14:20:55	FUNCT	IEC	DAILY_FLOW_TOTAL_STORAGE_02	.16.78	14,118
				DAILY_FLOW_TOTAL_STORAGE_02	.16.81	14,133
				DAILY_FLOW_TOTAL_STORAGE_02	.16.84	14,148
				DAILY_FLOW_TOTAL_STORAGE_02	.16.87	14,163
				DAILY_FLOW_TOTAL_STORAGE_02	.16.90	14,178
				DAILY_FLOW_TOTAL_STORAGE_02	.16.93	89,103
				DAILY_FLOW_TOTAL_STORAGE_02	.16.96	89,118
				DAILY_FLOW_TOTAL_STORAGE_02	.16.99	89,133
				DAILY_FLOW_TOTAL_STORAGE_02	.16.102	89,148
				DAILY_FLOW_TOTAL_STORAGE_02	.16.105	89,163
				DAILY_FLOW_TOTAL_STORAGE_02	.16.108	89,178
				DAILY_FLOW_TOTAL_STORAGE_02	.16.111	164,103
				DAILY_FLOW_TOTAL_STORAGE_02	.16.114	164,118
				DAILY_FLOW_TOTAL_STORAGE_02	.16.117	164,133
				DAILY_FLOW_TOTAL_STORAGE_02	.16.120	164,148
				DAILY_FLOW_TOTAL_STORAGE_02	.16.123	164,163
				DAILY_FLOW_TOTAL_STORAGE_02	.16.126	164,178
				DAILY_FLOW_TOTAL_STORAGE_02	.16.129	239,103
				DAILY_FLOW_TOTAL_STORAGE_02	.16.132	239,118
				DAILY_FLOW_TOTAL_STORAGE_02	.16.135	239,133
				DAILY_FLOW_TOTAL_STORAGE_02	.16.138	239,148
				DAILY_FLOW_TOTAL_STORAGE_02	.16.141	239,163
				DAILY_FLOW_TOTAL_STORAGE_02	.16.144	239,178
				DAILY_FLOW_TOTAL_STORAGE_02	.16.147	14,203
				DAILY_FLOW_TOTAL_STORAGE_02	.16.150	14,218
				DAILY_FLOW_TOTAL_STORAGE_02	.16.153	89,203
				DAILY_FLOW_TOTAL_STORAGE_02	.16.156	89,218
				DAILY_FLOW_TOTAL_STORAGE_02	.16.159	164,203
				DAILY_FLOW_TOTAL_STORAGE_02	.16.162	164,218
				DAILY_FLOW_TOTAL_STORAGE_02	.16.165	239,203
				DAILY_FLOW_TOTAL_STORAGE_02	.16.168	239,218
				DAILY_FLOW_TOTAL_STORAGE_03	.17.3	14,3
				DAILY_FLOW_TOTAL_STORAGE_03	.17.6	14,18
				DAILY_FLOW_TOTAL_STORAGE_03	.17.9	14,33
				DAILY_FLOW_TOTAL_STORAGE_03	.17.12	14,48
				DAILY_FLOW_TOTAL_STORAGE_03	.17.15	14,63
				DAILY_FLOW_TOTAL_STORAGE_03	.17.18	14,78
				DAILY_FLOW_TOTAL_STORAGE_03	.17.21	89,3
				DAILY_FLOW_TOTAL_STORAGE_03	.17.24	89,18
				DAILY_FLOW_TOTAL_STORAGE_03	.17.27	89,33
				DAILY_FLOW_TOTAL_STORAGE_03	.17.30	89,48
				DAILY_FLOW_TOTAL_STORAGE_03	.17.33	89,63
				DAILY_FLOW_TOTAL_STORAGE_03	.17.36	89,78
REAL_TO_DINT	3/24/1997 14:20:55	FUNCT	IEC	DAILY_FLOW_TOTAL_STORAGE_03	.17.37	88,92
DIV_REAL	3/24/1997 14:20:55	FUNCT	IEC	SHUTDOWN	.8.10	43,26
				DISCHARGE_WETWELL_AND_PUMP	.5.343	43,45
				EXTRACTION_WELLS	.2.286	27,162
				EXTRACTION_WELLS	.2.295	43,174
				EXTRACTION_WELLS	.2.308	43,188
				EXTRACTION_WELLS	.2.309	43,199

table continued...

EFB usage

Name	Version	Kind	EFB Library	Used in section	Instance	at
DIV_REAL	3/24/1997 14:20:55	FUNCT	IEC	EXTRACTION_WELLS	.2.314	43,210
				EXTRACTION_WELLS	.2.532	51,144
TOTALIZER	3/24/1997 14:20:55	FB	CONT_CTL	SHUTDOWN	FBI_8_12	91,26
				DISCHARGE_WETWELL_AND_PUMP	FBI_5_341	91,45
				EXTRACTION_WELLS	FBI_2_533	107,144
GE_REAL	3/24/1997 14:20:55	FUNCT	IEC	SHUTDOWN	.8.19	19,44
COMP_DB	2/15/2001 09:12:41	FB	CONT_CTL	SHUTDOWN	FBI_8_28	91,55
				SHUTDOWN	FBI_8_110	19,67
				SHUTDOWN	FBI_8_111	67,67
				SHUTDOWN	FBI_8_144	43,102
				DISCHARGE_WETWELL_AND_PUMP	FBI_5_51	59,29
				DISCHARGE_WETWELL_AND_PUMP	FBI_5_52	91,29
				DISCHARGE_WETWELL_AND_PUMP	FBI_5_358	51,60
				AIR_STRIPPER	FBI_4_19	19,11
				AIR_STRIPPER	FBI_4_20	67,11
				BAGFILTER_SCALENT_VGAC	FBI_3_2	19,1
				BAGFILTER_SCALENT_VGAC	FBI_3_3	67,1
				BAGFILTER_SCALENT_VGAC	FBI_3_58	67,34
				BAGFILTER_SCALENT_VGAC	FBI_3_59	19,34
				EXTRACTION_WELLS	FBI_2_552	91,16
				EXTRACTION_WELLS	FBI_2_563	91,44
				EXTRACTION_WELLS	FBI_2_565	91,7
				EXTRACTION_WELLS	FBI_2_574	91
				EXTRACTION_WELLS	FBI_2_577	91,125
W_INT_REAL	3/24/1997 14:20:55	FB	ANA_IO	SHUTDOWN	FBI_8_145	19,102
				DISCHARGE_WETWELL_AND_PUMP	FBI_5_357	27,60
				ANALOG	FBI_1_52	27,30
				ANALOG	FBI_1_53	27,24
				ANALOG	FBI_1_56	27,19
				ANALOG	FBI_1_57	27,13
				ANALOG	FBI_1_62	27,3
				ANALOG	FBI_1_63	27,55
				ANALOG	FBI_1_66	27,49
				ANALOG	FBI_1_67	27,43
				ANALOG	FBI_1_70	27,61
				ANALOG	FBI_1_71	27,67
				ANALOG	FBI_1_74	27,73
				ANALOG	FBI_1_76	27,79
				ANALOG	FBI_1_77	27,85
				ANALOG	FBI_1_79	27,91
				ANALOG	FBI_1_82	27,96
				ANALOG	FBI_1_83	27,107
				ANALOG	FBI_1_86	27,101
				ANALOG	FBI_1_89	27,113
				ANALOG	FBI_1_91	27,118
				ANALOG	FBI_1_93	27,123
				ANALOG	FBI_1_95	27,129
				ANALOG	FBI_1_98	27,135
				ANALOG	FBI_1_99	27
MUL_DINT	3/24/1997 14:20:55	FUNCT	IEC	DISCHARGE_WETWELL_AND_PUMP	.5.350	19

table continued...

EFB usage

Name	Version	Kind	EFB Library	Used in section	Instance	at
MUL_DINT	3/24/1997 14:20:55	FUNCT	IEC	AIR_STRIPPER	.4.188	19,63
				EXTRACTION_WELLS	.2.351	59,6
				EXTRACTION_WELLS	.2.453	59,33
				EXTRACTION_WELLS	.2.466	59,61
				EXTRACTION_WELLS	.2.495	59,89
				EXTRACTION_WELLS	.2.508	59,115
DINT_TO_TIME	3/24/1997 14:20:55	FUNCT	IEC	DISCHARGE_WETWELL_AND_PUMP	.5.351	35,19
				AIR_STRIPPER	.4.165	35,40
				AIR_STRIPPER	.4.187	35,63
				EXTRACTION_WELLS	.2.352	75,6
				EXTRACTION_WELLS	.2.452	75,33
				EXTRACTION_WELLS	.2.467	75,61
				EXTRACTION_WELLS	.2.494	75,89
				EXTRACTION_WELLS	.2.509	75,115
TIME_TO_DINT	3/24/1997 14:20:55	FUNCT	IEC	DISCHARGE_WETWELL_AND_PUMP	.5.352	75,16
				AIR_STRIPPER	.4.168	75,36
				AIR_STRIPPER	.4.186	75,60
				EXTRACTION_WELLS	.2.360	115,3
				EXTRACTION_WELLS	.2.451	115,30
				EXTRACTION_WELLS	.2.468	115,58
				EXTRACTION_WELLS	.2.493	115,86
				EXTRACTION_WELLS	.2.510	115,112
DIV_DINT	3/24/1997 14:20:55	FUNCT	IEC	DISCHARGE_WETWELL_AND_PUMP	.5.353	91,16
				AIR_STRIPPER	.4.184	91,60
				EXTRACTION_WELLS	.2.378	163,3
				EXTRACTION_WELLS	.2.445	163,30
				EXTRACTION_WELLS	.2.474	163,58
				EXTRACTION_WELLS	.2.487	163,86
				EXTRACTION_WELLS	.2.516	163,112
ADD_REAL	3/24/1997 14:20:55	FUNCT	IEC	EXTRACTION_WELLS	.2.281	99,167
				EXTRACTION_WELLS	.2.297	99,179
				EXTRACTION_WELLS	.2.306	99,193
				EXTRACTION_WELLS	.2.311	99,204
				EXTRACTION_WELLS	.2.316	99,215
				EXTRACTION_WELLS	.2.319	59,222
				EXTRACTION_WELLS	.2.534	19,144
SCALING	3/24/1997 14:20:55	FB	CONT_CTL	ANALOG	FBI_1_51	51,30
				ANALOG	FBI_1_54	51,24
				ANALOG	FBI_1_55	51,19
				ANALOG	FBI_1_58	51,13
				ANALOG	FBI_1_61	51,3
				ANALOG	FBI_1_64	51,55
				ANALOG	FBI_1_65	51,49
				ANALOG	FBI_1_68	51,43
				ANALOG	FBI_1_69	51,61
				ANALOG	FBI_1_72	51,67
				ANALOG	FBI_1_73	51,73
				ANALOG	FBI_1_75	51,79
				ANALOG	FBI_1_78	51,85
				ANALOG	FBI_1_80	51,91

table continued...

EFB usage

Name	Version	Kind	EFB Library	Used in section	Instance	at
SCALING	3/24/1997 14:20:55	FB	CONT_CTL	ANALOG	FBI_1_81	51,96
				ANALOG	FBI_1_84	51,107
				ANALOG	FBI_1_85	51,101
				ANALOG	FBI_1_90	51,113
				ANALOG	FBI_1_92	51,118
				ANALOG	FBI_1_94	51,123
				ANALOG	FBI_1_96	51,129
				ANALOG	FBI_1_97	51,135
				ANALOG	FBI_1_100	51,140
				ANALOG	FBI_1_102	27,146
				ANALOG	FBI_1_105	27,152
				ANALOG	FBI_1_107	27,157
REAL_TO_INT	3/24/1997 14:20:55	FUNCT	IEC	ANALOG	.1.109	59,157
				ANALOG	.1.110	51,152
				ANALOG	.1.111	51,146

ASCII-Messages: does not exist

Message Window contents: does not exist

Section Nine

Distributed I/O and Control
Modicon Momentum

Catalog
July
05

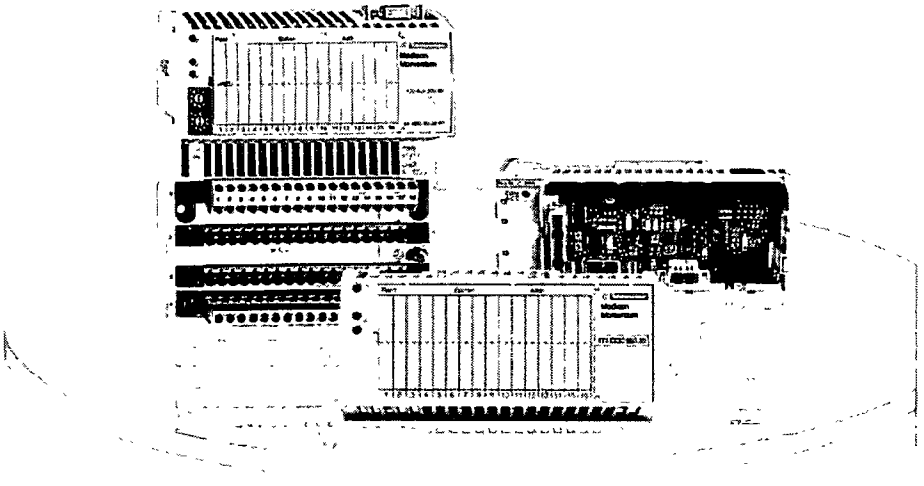

a brand of Schneider Electric

Telemecanique

Telemecanique,

catalogues for .....

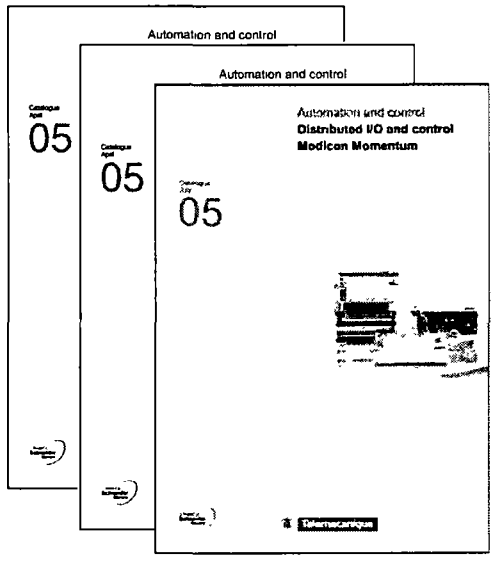

Automation

N° 807861
MKTED205061EN

Detection

Global Detection
Electronic and electromechanical sensors
N° 54752 - MKTED203031EN

Limit switches
Proximity sensors
Photo-electric and ultrasonic sensors
Pressure switches
Rotary encoders

Software
Safety mat configuration software

Automation

Modicon Momentum distributed I/O and control
N° 807861 - MKTED205061EN

Automation platform Modicon Quantum and Unity - Concept Proworx software
N° 802621 - MKTED204071EN

Automation platform Modicon Premium and Unity - PL7 software
N° 802625 - MKTED204072EN

Automation platform Modicon TSX Micro and PL7 software
N° 70984 - MKTED204012EN

PLCs, PC based control
Distributed I/O
Communication

Automation and relay functions
N° 70455 - MKTED204011EN

Plug-in relays
Electronic timers
Control relays
Counters
Smart relays

Software
PLCs and safety controllers programming software

Operator dialog

Control and signalling components
N° 805911 - MKTED205021EN

Control and signalling units
Cam switches
Beacons and indicator banks
Control and pendant stations
Controllers
Front panels, mounting kits
Emergency stops
Foot switches

Human/Machine interfaces
N° 96949 - MKTED2040401EN

Operator interface terminals, industrial PCs, Web servers, HMI and SCADA PC-based software

Software
Operator terminal software

Motor control

Motor starter solutions
Control and protection components
N° 27501 - MKTED201001EN

Contactors
Circuit-breakers, fuse carriers
Thermal relays
Combinations, motor controllers

Mounting solutions
Motor starter mounting kits

Soft starters and variable speed drives
N° 802660 - MKTED204091EN

Software,
Variable speed drives

Software
Motor control programming software

Not all products shown in this catalogue are available in every country
Check individual country's web site or Sales Office for product availability
See on: www schneider-electric.com

..... all Automation & Control functions

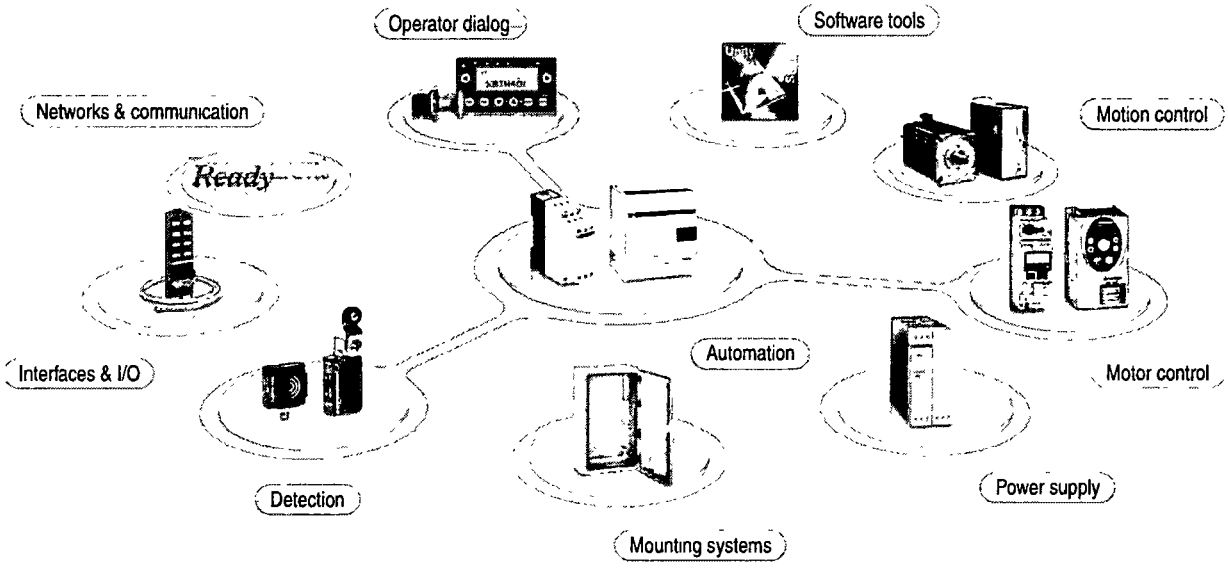

Motion control

Motion control Lexium 17D
N° 80638 - MKTED205031EN

Twin Line Motion control
N° 061233 - DIA7ED2030902EN

Servodrives and brushless motors
Motion control modules
Modicon Premium and Modicon Quantum

Software
Software for drives and motors

Power supplies

Interfaces, I/O splitter boxes and power supplies
N° 70263 - MKTED203113EN

Switch mode power supplies

Filtered rectified power supplies and transformers

Machine safety

This catalogue contains Automation and Control function products relating to Safety

Safety solutions using Preventa
N° 67341 - MKTED203111EN

Safety monitors and controllers on AS-Interface

Switches, light curtains, mats

Emergency stops, control stations, enabling switches, foot switches, beacons & indicator banks

Optimum and universal controllers

Switch disconnectors, thermal-magnetic motor circuit breakers, enclosed D.O.L. starters

Interfaces & I/O

Interfaces, I/O splitter boxes and power supplies
N° 70263 - MKTED203113EN

Plug-in relays
Analog converters
Discrete interfaces
Pre-wired interfaces
IP67 Splitter boxes

Connectors
Cable ends, terminal blocks

IP 20 distributed inputs/ outputs Advantys STB
N° 80487 - MKTED204101EN

Modules for automation island
Network interface,
power distribution, digital I/O, analogs and application-specific

Software
Software to design and install AS-Interface system, safety monitors and controllers on AS-Interface programming software

STB configuration software

AS-Interface

This catalogue contains Automation and Control function products relating to the AS-Interface cabling system

AS-Interface cabling system
N° 804961 - MKTED204121EN

IP20/IP67 interfaces, cables, repeaters, addressing and adjustment terminals

Control stations, keypads, beacons & indicator banks

Master modules for PLCs

AS-Interface power supplies

Motor controllers, enclosures, variable speed drives

Networks & communication

Ethernet TCP/IP Transparent Ready
N° 802731 - MKTED204073EN

Connecting Ethernet devices

Web-enabling PLCs on Ethernet

Application protocols and field buses

Contents

Distributed I/O and control Modicon Momentum

■ **Presentation** ..... *page 6 & 7*

Discrete I/O bases

Selection guide ..... ***page 8 - 11***

■ Presentation, description ..... *page 12*

■ Characteristics ..... *page 13 - 18*

■ References ..... *page 19*

■ Dimensions, mounting ..... *page 20*

■ Connections ..... *page 21 - 25*

Analog I/O bases

Selection guide ..... ***page 26 & 27***

■ Presentation, description ..... *page 28*

■ Characteristics ..... *page 29 - 33*

■ References ..... *page 34*

■ Dimensions, mounting ..... *page 35*

■ Connections ..... *page 36 & 37*

Specialty module I/O bases

Selection guide ..... ***page 38 & 39***

■ Presentation, description ..... *page 40*

■ Characteristics ..... *page 41*

■ References ..... *page 42*

■ Connections ..... *page 43*

Communication adapters

Selection guide ..... ***page 44 - 47***

■ Ethernet TCP/IP network communication adapters ..... *page 48 & 49*

■ Modbus Plus network communication adapters ..... *page 50 - 53*

■ Fipio bus communication adapters ..... *page 54 & 55*

■ INTERBUS bus communication adapters ..... *page 56 & 57*

■ Profibus DP bus communication adapter ..... *page 58 & 59*

■ DeviceNet network communication adapter ..... *page 60 & 61*

M1/M1E processor adapters and option adapters

Processor adapters selection guide ..... ***page 62 & 63***

- M1/M1E processor adapters
  - Presentation ..... *page 64*
  - Description ..... *page 65*
  - Characteristics ..... *page 66 - 69*
  - References ..... *page 70*
  - Power supply ..... *page 71*

Option adapters selection guide ..... ***page 72 & 73***

- Option adapters
  - Presentation ..... *page 74*
  - Description ..... *page 75*
  - Characteristics ..... *page 76*
  - References ..... *page 77*

Ethernet cabling system

- ConneXium hubs ..... *page 78*
- ConneXium transceivers ..... *page 79*
- ConneXium switches ..... *page 80 - 82*
- ConneXium connection cables ..... *page 83*

Programming software *(for M1/M1E processor adapters)*

- Concept IEC programming software
  - Presentation ..... *page 84*
  - Functions ..... *page 85 - 88*
  - References ..... *page 89*
- ProWORX 32 for 984 Ladder Logic programming
  - Presentation ..... *page 90 - 92*
  - References ..... *page 93*

Additional products and services

- Optional conformal coating for aggressive environments
  - Presentation ..... *page 94*
  - References ..... *page 95*
- Enhanced grounding system
  - Presentation ..... *page 96*
  - References ..... *page 96*
- User documentation ..... *page 97*
- Automation product certifications ..... *page 98*
- Community regulations ..... *page 99*
- Product reference index ..... *page 100*

Modicon Momentum automation platform
Introduction

A modular concept with four easy pieces

The Momentum I/O system comprises 4 fundamental components that easily snap together in various combinations to form versatile distributed I/O system.

The four pieces are:
1 I/O bases
2 Communication adapter
3 Processor adapters
4 Option adapters.

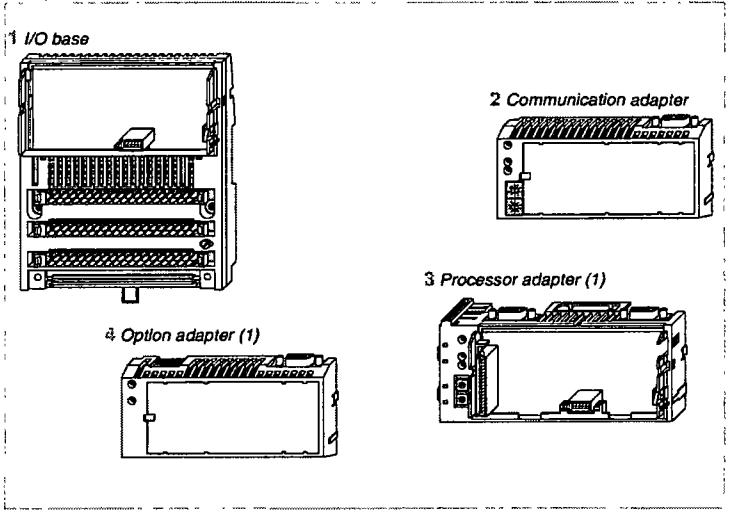

Momentum communication adapters 2

Momentum's design separates the communications from the I/O base 1, thus creating a truly open I/O system that can be easily adapted to any field-bus network. When a Momentum I/O is coupled with a communication adapter 2, the two form a remote I/O drop that connects directly to virtually any standard field-bus I/O network. Together, Momentum I/O supports control systems based on personal computers, distributed control systems, programmable controllers and Momentum processors.

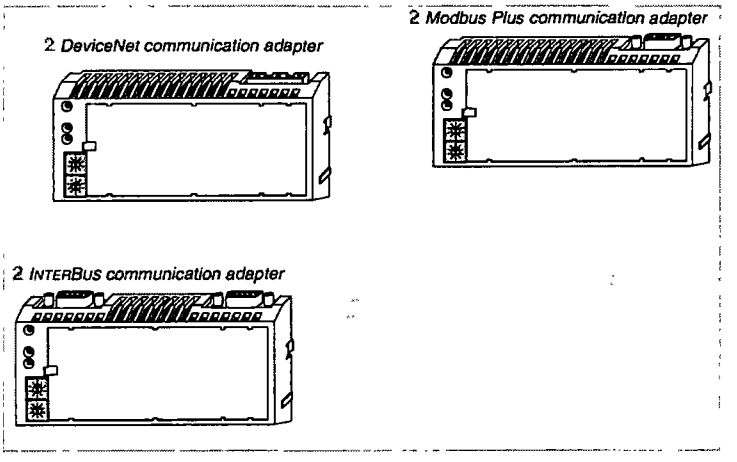

(1) The processor adapters 3 are only compatible with the Concept or ProWORX software.

Modicon Momentum automation platform
Introduction

Momentum I/O bases 1

Specialized Momentum I/O bases support the rest of the control system. The communication adapters 2, processor adapters and option adapters all snap onto the I/O bases 1. A selection of I/O base modules are available, including analog I/O, discrete I/O, multi-function analog and bi-directional discrete bases. In addition, Momentum I/O bases offer simple plug-in terminal strips, as well as standard 35 mm DIN rail or panel mounting for ease of maintenance and installation.

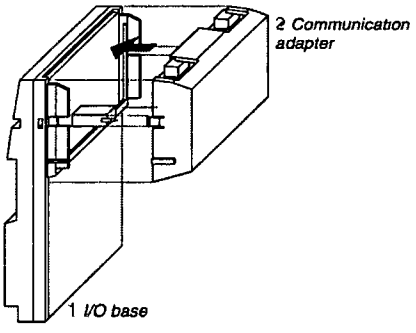

Momentum processor adapters 3 and option adapters 4 *(1)*

When local distributed intelligence is required at the point of control, Momentum has the answer. Momentum M1 processor adapters 3 are full fledged PLCs containing a CPU, RAM and Flash memory. They are based on the popular Modicon family of PLCs (i.e., directly compatible with Quantum, Compact and 984 PLCs), and snap onto the Momentum I/O bases 1, just like the communication adapters 2.

The option adapter 4 provides the processor adapters with additional networking capabilities, a time-of-day clock, and a battery back-up. The option adapters also snap onto the I/O base; in the figure below, the processor adapter is stacked on top.

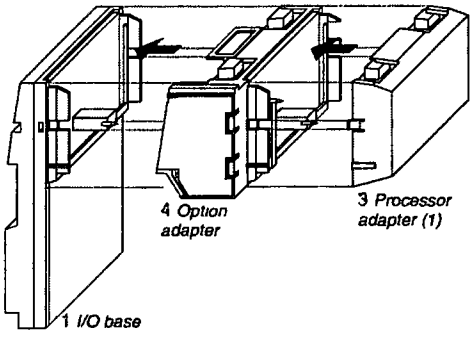

Optional conformal coating

If your control system needs to operate in a corrosive environment, selected Momentum modules can be ordered with a conformal coating applied to components of the product. Conformal coating will extend its life and enhance its environmental. performance capabilities.

See pages 94 and 95.

Enhanced grounding system

Due to new INTERBUS standards for electrical noise immunity, a number of Momentum products have been updated to include the enhanced grounding system, which is required to meet the revised electrical noise immunity standard (ability to pass a 2.2 kV electrical fast transient burst test).

See page 96 for a list of Momentum products that currently have been updated to include the new grounding system.

(1) The processor adapters are only compatible with the Concept or ProWORX software

Modicon Momentum automation platform
Discrete I/O bases

Product type		Input modules for direct current		Input modules for alternating current	
		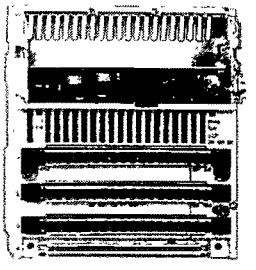		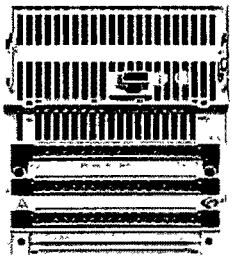	
Type of signal		True high			
Operating voltage and input voltage		24 VDC		120 VAC	230 VAC
Current consumption		max 250 mA		max. 125 mA	
Input type		IEC 1131 Type 1+		IEC 1131 Type 2	IEC 1131 Type 1+
Output voltage		–			
Output type		–			
Number of points		1 x 16 In	2 x 16 In	2 x 8 In	
Potential isolation	Point to point	None		None	
	Group to group	None		1780 VAC	
	Field to adapter	500 VAC		1780 VAC	
Current capacity	Per output	–			
	Per group	–			
	Per module	–			
Response time	OFF-ON	2.2 ms		10 ms @ 60 Hz	13.3 ms @ 60 Hz
	ON-OFF	3.3 ms		35 ms @ 60 Hz	13.3 ms @ 60 Hz
Protection against short circuit and overload		–			
Fault reporting	Output fault	–			
	I/O error	–			
	Blown fuse	–			
Type of module		170ADI 34000	170ADI 35000	170ADI 54050	170ADI 74050
Pages		13			

Output modules for direct current		Output modules for alternating current				Relay output module
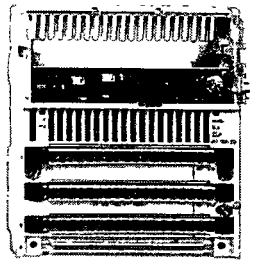		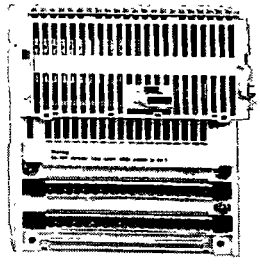				
True high						
24 VDC		120 VAC		230 VAC		120 to 230 VDC
max. 250 mA		max. 125 mA		max. 65 mA		125 mA @ 120 VAC 65 mA @ 230VDC
–						
24 VDC		120 VAC		230 VAC		20 to 250 VAC 5 to 30 VDC
Solid state switch		Triac				Relay from "C"
2 x 8 out	2 x 16 out	2 x 4 out	2 x 8 out	2 x 4 out	2 x 8 out	6 out (isolated)
None		None				1780 VAC for 1 mn
None		None				1780 VAC for 1 mn
500 VAC		1780 VAC				1780 VAC for 1 mn
0.5 A	0.5 A	2 A	0.5 A	2 A	0.5 A	5 A
4 A	8 A	4 A	4 A	4 A	4 A	5 A
8 A	16 A	8 A	8 A	8 A	8 A	21 A @ 60 °C 25 A @ 30 °C
< 0.1 ms		max. 1/2 x 1/f				10 ms
< 0.1 ms		max. 1/2 x 1/f				20 ms
Electronically safeguarded		1 fuse per group				–
1 LED/Out	1 LED/4 Out	None				–
to adapter	to adapter	None				–
–	–	1 LED				–
170ADO34000	170ADO35000	170ADO53050	170ADO54050	170ADO73050	170ADO74050	170ADO83030

14

Modicon Momentum automation platform
Discrete I/O bases

Product type	I/O modules for direct current		
	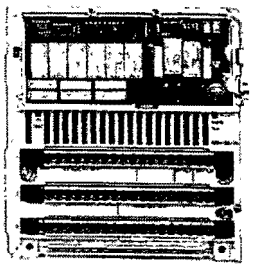		
Type of signal	True high	True low	True high
Input voltage	24 VDC		
Operating voltage	24 VDC		
Current consumption	max. 250 mA		max. 250 mA + sensor current
Input type	IEC 1131 Type 1+		
Output voltage	24 VDC		
Output type	Solid state switch		
Number of points	1 x 16 In, 2 x 8 Out		4 x 4 In, 2 x 4 Out
Potential isolation – Point to point	None		
Potential isolation – Group to group	None		
Potential isolation – Field to adapter	500 VAC		
Current capacity – Per output	0.5 A		2 A
Current capacity – Per group	4 A		8 A
Current capacity – Per module	8 A		16 A
Response time – OFF-ON	2.2 ms In, < 1 ms Out	60 µs In, < 1 ms Out	2.2 ms In, < 1 ms Out
Response time – ON-OFF	3.3 ms In, < 1 ms Out	80 µs In, < 1 ms Out	3.3 ms In, < 1 ms Out
Protection against short circuit and overload	Electrically safeguarded outputs		Electrically safeguarded outputs and 4 electronically safeguarded sensor supply group
Fault reporting – Output fault	1 LED/Out		
Fault reporting – I/O error	to adapter		
Fault reporting – Blown fuse	–		
Type of module	170ADM35010	170ADM35011	170ADM35015	170ADM37010
Pages	15			16

I/O modules for direct current		I/O modules for direct and alternating current		
		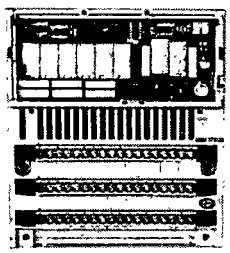		
True high				
24 VDC	12, 24, 48 VDC	24 VDC		120 VAC
24 VDC	12, 24, 48 VDC	24 VDC	120 VAC	
max. 180 mA	500 mA @ 12 VDC 250 mA @ 24 VDC 125 mA @ 48 VDC	max. 250 mA		max. 160 mA
IEC 1131 Type 1+, monitored		IEC 1131 Type 1+		IEC 1131 Type 2
24 VDC	12, 24, 48 VDC	24...230 VAC or 20...115 VDC		120...132 VAC
Solid state switch		Relay (normally open)		Tnac
1 x 16 In, 1x 8 Out and 1 x 4 Out	1 x 16 In, 1 x 16 Out	1 x 10 In, 2 x 4 Out		1 x 10 In, 1 x 8 Out
None	None	None	1780 VAC	None
None	None	None	1780 VAC	None
500 VAC	707 VDC	500 VAC	500 VAC	1780 VAC
0.5 A	0.5 A	2 A ohmic load		0.5 A
4 A group 1, 2 A group 2	–	8 A ohmic load		2 A
6 A	8 A @ 50 °C, 7 A @ 60 °C	16 A ohmic load		4 A
2.2 ms In, < 1 ms Out	2.2 ms In, < 2 5 ms Out	2.2 ms In, < 10 ms Out		max 1/2 x 1/f
3.3 ms In, < 1 ms Out	3.3 ms In, < 2.5 ms Out	3.3 ms In, < 10 ms Out		max 1/2 x 1/f
Electronically safeguarded outputs	Electrically safeguarded outputs	None	Varistor in parallel with each contact	1 internal fuse per group (not against overload)
1 LED/In, 1 LED/Out	1 LED/Out	None		None
to adapter	to adapter	None		None
–	–	–		1 LED/fuse
170ADM39010	170ADM85010	170ADM39030	170ARM37030	170ADM69051
15	16	17		18

Modicon Momentum automation platform

Discrete I/O bases

Presentation

The Momentum Automation Platform products are modular. Communication Adapters and Processor Adapters are designed to work as functional modules when they are snapped onto a Momentum I/O base. An I/O base requires some type of Momentum Adapter assembled on it before it can be functional.

The I/O bases fit into compact standard housings that can be mounted on a DIN rail or on panels in a cabinet. They read information from field sensing devices and control discrete and analog field actuating devices. Terminal blocks and bus bars are available for use with the bases so that they can be used to support 2-, 3-, and 4-wire field devices.

The I/O field devices and the power supply to the module are connected via three 18-pin terminal blocks and an optional 1-, 2-, or 3-row busbar. The terminal connectors are electrically connected to the module; the optional busbars not.

Busbars provide a common connection for the field devices and serve as protective distribution connectors. Depending on the I/O base and the type and number of field devices to which it is connected, a 1-, 2-, or 3-row busbar may be used.

Terminal blocks and busbars are ordered separately, and are not shipped with the Momentum I/O bases. They are available in either screw-in or spring-clip versions.

Description

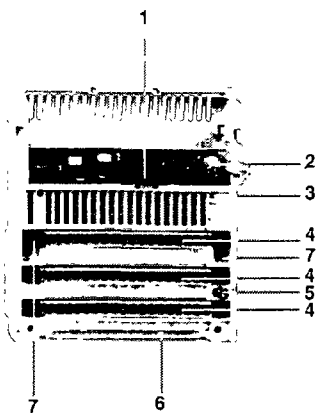

170ADo discrete I/O base units comprise on the front panel:

1 An internal interface connector for the communication module or processor module.
2 A locking and earth contact for the communication module or processor module.
3 LED status indicators (the number of indicators will depend on the number of channels).
4 Up to three connectors for the removable terminal blocks (Modbus dependent).
5 An grounding screw.
6 A slot for the power strip.
7 Two holes for panel mounting.

Connectors to be ordered separately:
- removable screw or spring terminals **170XTS00o00**
- 1 to 3-row screw or spring bus bar **170XTS00o01**.

Characteristics, pages 13 to 18 | References: page 19 | Dimensions, mounting: page 20 | Connections: pages 21 to 25

Characteristics of discrete input bases

Type of input base unit			170ADI34000	170ADI35000	170ADI54050	170ADI74050
Number of inputs			1 x 16	2 x 16	2 x 8	
Input voltage		**V**	24 DC		120 AC	230 AC
Operating voltage		**V**	24 DC		85 to 132 AC (@ 47 to 63 Hz)	164 to 253 AC (@ 47 to 63 Hz)
Internal current		**mA**	250 (@ 24 VDC)		125 (@ 120 VAC)	125 (@ 230 VAC)
Input voltage range		**V**	- 3 to 30 DC		0 to 132 AC	163 to 253 AC
	ON voltage	**V**	+ 11 to 30 DC		74 AC minimum	164 AC minimum
	OFF voltage	**V**	- 3 to + 5 DC		20 AC maximum	40 AC maximum
Input current	ON	**mA**	2.5 minimum		10 0 minimum	
	OFF	**mA**	1.2 maximum		2 0 maximum	
Input resistance		**kΩ**	4		9.5 @ 50 Hz 7.5 @ 60 Hz	9 @ 50 Hz 7.5 @ 60 Hz
Type of signal			True High			
Response time	On-off maximum	**ms**	3.3		35 0 @ 60 Hz	13.3 @ 60 Hz
	Off-on maximum	**ms**	2.2		10.0 @ 60 Hz	13 3 @ 60 Hz
Potential isolation	Input to input		None		None	
	Group to group	**V**	None		1780 AC	
	Field to communication interface	**V**	500 AC		1780 AC	
Power dissipation		**W**	3 typical, 5 maximum	5.5 typical, 8.5 maximum	–	
Agency approvals			UL, CE, CSA, FM Class I, Div. II	UL, CE, CSA	UL, CE, CSA, FM Class I, Div. II	UL, CE, CSA

References: page 19 | Dimensions, mounting: pages 20 | Connections pages 21 to 25

Characteristics of discrete output bases

Type of output base unit			170ADO34000	170ADO35000	170ADO83030
Number of outputs			2 x 8	2 x 16	1 x 6
Type of output			Solid state switch		Relay form "C"
Output voltage		V	24 DC		20 to 250 AC, 5 to 30 DC
Operating voltage		V	24 DC		120 to 230 AC
Internal current		mA	250 @ 24 VDC		125 @ 120 VAC, 65 @ 230 VAC
Current	Point maximum	A	0.5	0.5	5
	Group	A	4	8	5
	Module	A	8	16	21 @ 60 °C, 25 @ 30 °C
Min. output current		mA	–		50
Leakage current		mA	< 1 @ 24 VDC		< 0.1 @ 120 VAC
Surge current		A	5 for 1 ms		20 for 10 ms
On State Voltage drop		V	< 0.5 DC @ 0.5 A		< 0.2 @ 30 VDC
Protection (short-circuits, overloads)			Outputs electronically protected		Via external 315 mA fast-blow fuse
Response time	On-off maximum	ms	< 0.1		20 @ 60 Hz
	Off-on maximum	ms	< 0.1		10 @ 60 Hz
Potential Isolation	Output to output	V	None		1780 AC for 1 minute
	Output group to output group	V	None		1780 AC for 1 minute
	Field to communication interface	V	500 AC		1780 AC for 1 minute
Power dissipation		W	3.5 typical 4.5 maximum	6 0 typical 7.5 maximum	2.5
Agency approvals			UL, CE, CSA, FM Class I, Div. II	UL, CE, CSA	UL, CE, CSA, FM Class I, Div II

Type of output base unit			170ADO53050	170ADO54050	170ADO73050	170ADO74050
Number of outputs			2 x 4	2 x 8	2 x 4	2 x 8
Type of output			Triac			
Output voltage		V	120 AC		230 AC	
Operating voltage		V	120 AC (300 for 10 s, 400 for 1 cycle)		230 AC (300 for 10 s, 400 for 1 cycle)	
Internal current		mA	125		65	
Current	Point maximum	A	2	0.5	2	0.5
	Group	A	4			
	Module	A	8			
Min. output current		mA	5	30	5	30
Leakage current		mA	1.9 @ 120 VAC		2 5 @ 230 VAC	2.4 @230 VAC
Surge current		A	Point: 15 (1 cycle), 10 (2 cycles), 5 (3 cycles)			
On State Voltage drop		V	< 1.5 AC @ 2 A	< 1.5 AC @ 0 5 A	< 1.5 AC @ 2 A	< 1.5 AC @ 0.5 A
Protection (short-circuits, overloads)			Via internal 5 A slow-blow fuse per group			
Response time	On-off maximum	ms	1/2 x 1/f (= 0,5 of one line cycle)			
	Off-on maximum	ms	1/2 x 1/f (= 0,5 of one line cycle)			
Potential Isolation	Output to output		None			
	Output group to output group		None			
	Field to communication interface	V	1780 AC			
Power dissipation		W	6.0 typical 7.5 maximum			
Agency approvals			UL, CE, CSA, FM Class I, Div. II			

Description, page 12 | References: page 19 | Dimensions, mounting pages 20 | Connections: pages 21 to 25

Characteristics of discrete I/O bases

Type of base unit				170ADM35010	170ADM35011	170ADM35015	170ADM39010
Number of inputs				1 x 16			1 x 16
Number of outputs				2 x 8			1 x 8 and 1 x 4
Operating voltage			**VDC**	24			
Internal current			**mA**	250 @ 24 VDC			180 @ 24 VDC
Inputs	Voltage		**VDC**	24			
	Type of signal			True high		True low	True high
	Voltage at 1		**VDC**	+ 11 to + 30		- 3 to + 5	+ 11 to + 30
	Voltage at 0		**VDC**	- 3 to + 5		+ 4 to + 30	- 3 to + 5
	Input current		**mA**	2 5 min. at state 1 (6 mA at c 24 V),1.2 max. at state 0			
	Input voltage range		**VDC**	- 3 to + 30			
	Input resistance		**kΩ**	4			
	Response time	Off to on	**ms**	2.2	0.06	2.2 In, < 1 Out	
		On to off	**ms**	3.3	0.08	3.3 In, < 1 Out	
	Fault sensing			–			Broken wire detection
Outputs	Voltage		**VDC**	24, 30 max.			
	Type			Solid state switch			
	Type of signal			True high		True low	True high
	Current capacity		**A**	0.5 per point 4 per group 8 per module			0.5 per point 4 per group 1 2 per group 2 6 per module
	Leakage current		**mA**	< 1 @ 24 VDC			< 1 @ 24 VDC
	Peak current		**A**	5 for 1 ms			–
	On state voltage drop		**VDC**	< 0.5 @ 0.5 A			–
	Error indication			Output overload for at least one output to communication adapter			Output overload for at least one output to communication adapter
	Response time	Off to On	**ms**	< 0 1			
		On to Off	**ms**	< 0.1			
Potential isolation	Input to input			None			
	Output to output group			None			
	Input to output group			None			
	Field to communication interface		**V**	500 AC			
Power dissipation	Typical		**W**	6.0			6.5
	Maximum		**W**	8.0			10.0
Agency approvals				UL, CE, CSA			UL, CE, CSA, FM Class I, Div. II

Characteristics of discrete I/O bases

Type of base unit				170ADM 3701	170ADM 85010
Number of points	**Inputs**			4 x 4	1 x 16
	Outputs			2 x 4	1 x 16
Operating voltage			**VDC**	24	12, 24, 48 (10 to 60)
Internal current			**mA**	250 @ 24 VDC (plus current for sensors)	500 @ 12 VDC 250 @ 24 VDC 125 @ 48 VDC
Inputs	Voltage		**VDC**	24	12, 24, 48
	Type of signal			True high	
	Voltage at 1		**VDC**	+ 11 to + 30	> 7.5 @ 12 VDC > 11 @ 24 VDC > 30 @ 48 VDC
	Voltage at 0		**VDC**	- 3 to + 5	< 2.5 @ 12 VDC < 5 @ 24 VDC < 10 @ 48 VDC
	Input current		**mA**	2.5 min. at state 1 (6 mA at c 24 V), 1.2 max at state 0	2.3 @ 12 VDC 2.7 @ 24 VDC 2.9 @ 48 VDC
	Input voltage range		**VDC**	- 3 to + 30	10 to 60 V
	Input resistance		**kΩ**	4	–
	Response time	Off to On	**ms**	2.2 In, < 1 Out	2 2 In, < 2.5 Out
		On to Off	**ms**	3.3 In, < 1 Out	3.3 In, < 2.5 Out
	Fault sensing			–	
Outputs	Voltage		**VDC**	24, 30 max.	12, 24, 48, 60 max.
	Type			Solid state switch	
	Type of signal			True high	
	Current capacity		**A**	2 per point 8 per group 16 per module	0.5 per point 8 per group @ 50 °C 7 per module @ 60 °C
	Leakage current		**mA**	< 1 @ 24 VDC	< 1 @ 60 VDC
	Peak current		**A**	2.8 for 1 ms	5 for 1 ms
	On state voltage drop		**VDC**	–	< 1 @ 0.5 A
	Error indication			Output overload for at least one output or short-circuit or overload on one of the 4 encoder supply groups, to communication adapter	Output overload for at least one output to communication adapter
	Response time		**ms**	< 0.1 Off to On, < 0.1 On to Off	
Potential Isolation	Input to input			None	
	Output to output group			None	
	Input to output group		**V**	None	707 DC
	Field to communication interface		**Vrms**	500 AC	707 DC
Power dissipation	Typical		**W**	6.5	6.0 + (0 144 x nb of input points) + (0.25 x nb of output points)
	Maximum		**W**	10.0	–
Agency approvals				UL, CE, CSA	UL, CE, CSA, FM Class I, Div. II

Characteristics of discrete I/O bases (continued)

Type of base unit			170ADM39030	170RM37030
Number of points	**Inputs**		1 x 10	
	Outputs		2 x 4	
Operating voltage		**V**	24 DC	120 AC (47 to 63 Hz)
Internal current		**mA**	250 @ 24 VDC	5 minimum load current
Inputs	Voltage	**V**	24 to 230 AC 20 to 115 DC	
	Signal type		True High	
	On voltage minimum	**VDC**	+ 11 to + 30	
	Off voltage maximum	**VDC**	- 3 to + 5	
	Input current	**mA**	2.5 minimum On, 1.2 maximum Off	
	Input voltage range	**VDC**	- 3 to + 30	
	Input resistance	**kΩ**	4	
	Response time	**ms**	2.2 Off to On, 3 3 On to Off	
Outputs	Voltage	**V**	24 to 230 AC, 20 to 115 DC	
	Type		Relay normally open	
	Current capacity 24 VDC	**A**	> 0.005 (new contacts), ohmic load 2 A maximum, inductive load 1 A maximum (LR ⩽ 40 ms)	
	Current capacity 115 VDC	**A**	Ohmic load 0.5 A maximum (switching current ⩽ 1.5 A), inductive load 0.15 A maximum (LR ⩽ 40 ms)	
	Current capacity VAC	**A**	2 A maximum (switching current ⩽ 1 5 A) cosφ = 1, 1 A maximum cosφ = 0 5	2 A per point, 8 A per group, 16 A per module
	Leakage current	**mA**	< 1 @ 230 VAC	–
	Error indication		None	
	Response time	**ms**	10 @ 60 Hz Off to On, 10 @ 60 Hz On to Off	
	Max. number of switching circuits		> 30 x 10^6 (mechanical), > 1 x 10^5 (inductive load with external protection circuit)	
	Protection against short circuit and overload		None	Varistor in parallel with each contact
Potential isolation	Input to Input		None	
	Output group to output Group	**V rms**	None	1780 AC
	Input to output group	**V rms**	None	1780 AC
	Field to communication interface	**V rms**	500 AC	
Fusing	Internal		None	
	External operating voltage		315 mA fast-blow	4 A fast-blow
	External input voltage		max 4 A fast-blow	None
	External output voltage		According to the supply of the connected actuators not to exceed 8 A slow-blow/group	None
Power dissipation	Typical	**W**	5.5	
	Maximum	**W**	8.5	
Agency approvals			UL, CE, CSA	UL, CE, CSA, FM Class I, Div. II

Description: page 12 | References: page 19 | Dimensions, mounting: pages 20 | Connections: pages 21 to 25

Characteristics of discrete I/O bases (continued)

Type of base unit			170ADM69051
Number of points	**Inputs**		1 x 10
	Outputs		1 x 8
Operating voltage		**VAC**	120 (47 to 63 Hz)
Internal current		**mA**	160 (@ 120 VAC)
Inputs	Voltage	**VAC**	120
	Signal type		True high
	On voltage minimum	**VAC**	74
	Off voltage maximum	**VAC**	20
	Input current	**mA**	6.0 minimum at state 1, 2.6 maximum at state 0
	Input voltage range	**VAC**	74 to 132
	Input resistance	**kΩ**	4
	Response time	**ms**	Maximum 1/2 x 1/f Off to On, maximum 1/2 x 1/f On to Off
Outputs	Voltage	**VAC**	120 to 132 (@ 47 to 63 Hz)
	Type		Triac
	Current capacity		0.5 A per point maximum, 30 mA per point minimum, 2 A per group, 4 A per module
	Leakage current	**mA**	< 1 3 (@ 120 VAC)
	Signal type		True High
	On state voltage drop	**VAC**	< 1.5 (@ 0.5 A)
	Error indication		None
	Response time	**ms**	1/2 x 1/f maximum from state 0 to state 1, 1/2 x 1/f maximum from state 1 to state 0
	Maximum switching cycles		3000 hr for 0.5 A inductive load
Potential Isolation	Input to input		None
	Output group to output group		None
	Input to output group		None
	Field to communication interface	**Vrms**	1780 AC
Power dissipation	Typical	**W**	6
	Maximum	**W**	8
Protection	Internal fuses	**A**	2 x 2 5 slow-blow fuses
Agency approvals			UL, CE, CSA

Modicon Momentum automation platform
Discrete I/O bases

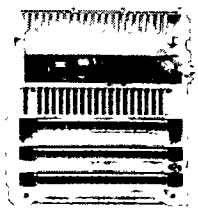
170ADIee0e0

Discrete input bases

Type of current		Modularity (no. of points)	Conformity EC 1131-2	Reference	Weight kg
DC	24 V	16 (1 x 16)	Type 1	170ADI34000	0 190
		32 (2 x 16)	Type 1	170ADI35000	0.200
AC	120 V	16 (2 x 8)	Type 2	170ADI54050	0.284
	230 V	16 (2 x 8)	Type 2	170ADI74050	0.284

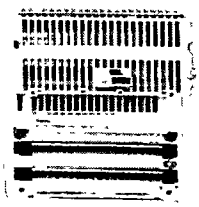
170ADOee0e0

Discrete output bases

Type of current	Output voltage	Modularity (no. of points)	Current per output	Reference	Weight kg
DC solid state protected	24 V	16 (2 x 8)	0 5 A	170ADO34000	0 210
		32 (2 x 16)	0.5 A	170ADO35000	0 210
DC/AC relay form "C"	5...24 VDC 24 .230 VAC	6 isolated	5 A	170ADO83030	0.260
AC triac protected, 1 fuse per group	120 V	8 (2 x 4)	2 A	170ADO53050	0 320
		16 (2 x 8)	0.5 A	170ADO54050	0.284
	230 V	8 (2 x 4)	2 A	170ADO73050	0 320
		16 (2 x 8)	0.5 A	170ADO74050	0.284

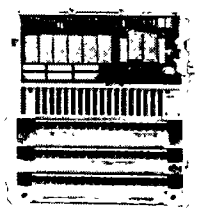
170ADMee0ee

Discrete I/O bases

Type of output current	Input voltage	Output voltage	Modularity Input	Modularity Outputs, current	Reference	Weight kg
DC solid state	24 VDC Type 1+	24 VDC protected	16 I (1 x 16)	16 O (2 x 8) 0 5 A	170ADM35010	0 200
			16 I, fast (1 x 16)	16 O (2 x 8) 0 5 A	170ADM35011	0 200
			16 I (1 x 16)	16 O (2 x 8) 0.5 A	170ADM35015	0.200
			16 I, wiring check (1 x 16)	12 O (1 x 8 and 1 x 4) 0 5 A	170ADM39010	0.260
			16 I (4 x 4)	8 O (2 x 4) 2 A	170ADM37010	0.220
DC relay	12...60 VDC	12 .60 VDC	16 I (1 x 16)	16 O (1 x 16) 0 5 A	170ADM85010	–
AC or DC relay	24 VDC Type 1+	24/230 VAC 20/115 VDC	10 I (1 x 10)	8 O (2 x 4) 2 A	170ADM39030 (1)	0.260
					170ARM37030 (2)	0.260
AC triac	100...120 VAC Type 2	120 VAC	10 I (1 x 10)	8 O (1 x 8) 0.5 A protected by 1 fuse	170ADM69051	0.220

170XTS00200

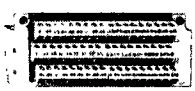
170XTS00401

170XTS00801

170XTS00601

Accessories

Description	Composition	Type of connection	Reference	Weight kg
Terminal blocks for I/O base connection Set of 3 connectors	1 row	Screw	170XTS00100	–
		Spring	170XTS00200	–
Bus Bar	3 rows	Screw	170XTS00401	–
		Spring	170XTS00301	–
	2 rows	Screw	170XTS00501	–
		Spring	170XTS00801	–
	1 row	Screw	170XTS00601	–
		Spring	170XTS00701	–
Cable grounding rail	Used to connect the cable shielding	–	CER001	–
High vibration environment clips	Kit containing 5 sets of clips	–	170XTS12000	–
Dummy base unit	Used to prewire the I/O base units Requires screw or spring connection terminals		170BDM09000	–
Discrete input simulator	16 channels, 24 VDC	–	170BSM01600	–

CER001

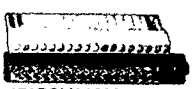
170BSM01600

Replacement parts

Description	Use	Reference	Weight kg
Sheets of labels	10 front labels for Momentum modules	170XTS10000	–
Cable coding part kit	For screw or spring connection terminals	170XCP20000	–

(1) Operating voltage 24 VDC.
(2) Operating voltage 120 VAC.

Description page 12 | Characteristics pages 13 to 18 | Connections: pages 21 to 25

Dimensions, mounting

170ADo, rail or panel mounting

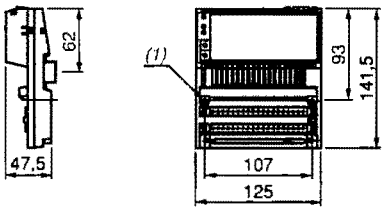

(1) 2 holes for M4 screws, for panel mounting

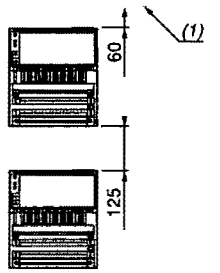

(1) Equipment or enclosure

Connections of discrete input bases

170ADI34000

Example of external wiring of 2, 3 and 4-wire sensors

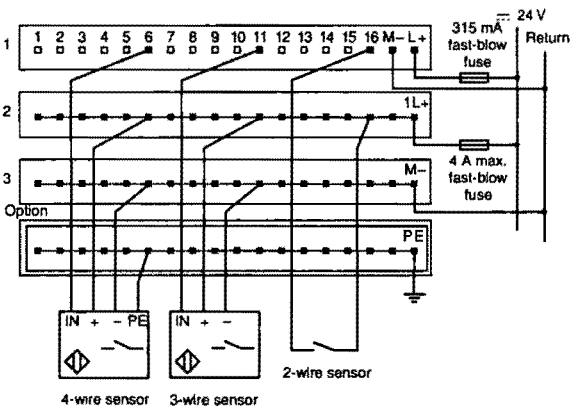

Group of channels

Internal wiring

170ADI35000

Example of external wiring of 2 and 3-wire sensors

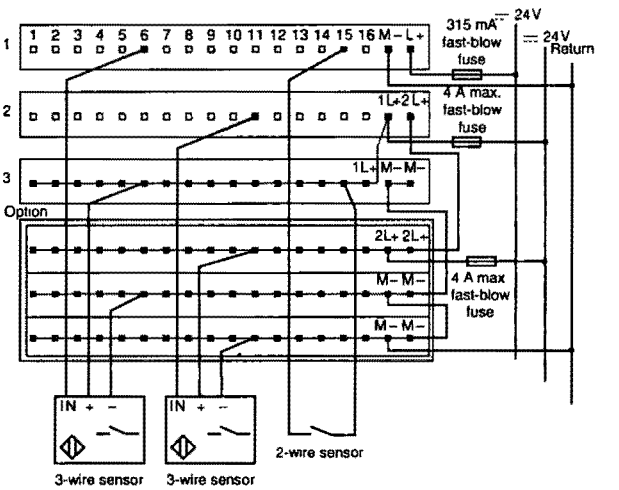

Group of channels

Internal wiring

170ADI54050

Example of external wiring of 2 and 3-wire sensors

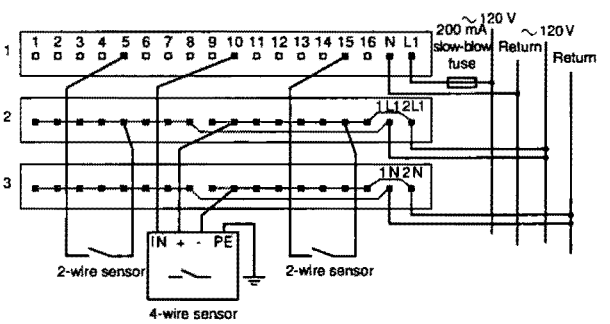

Group of channels

Internal wiring

170ADI74050

Example of external wiring of 2 and 3-wire sensors

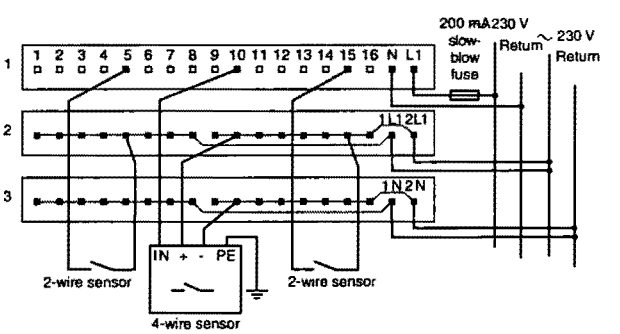

Group of channels

Internal wiring

Description page 12
Characteristics pages 13 to 18

Connections of discrete output bases

170ADO34000

Example of external wiring of 2 and 3-wire actuators

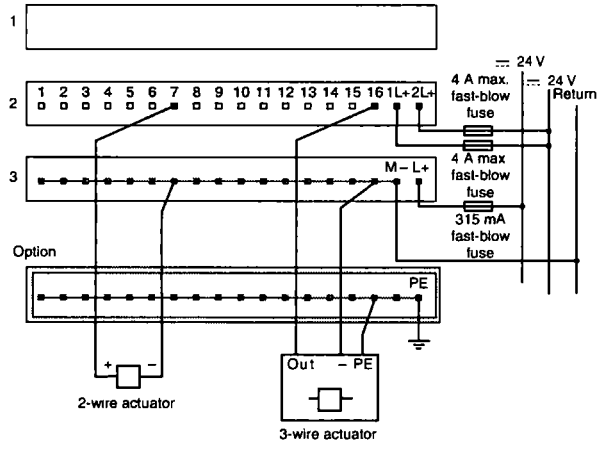

Group of channels

Internal wiring

170ADO35000

Example of external wiring of 2 and 3-wire actuators

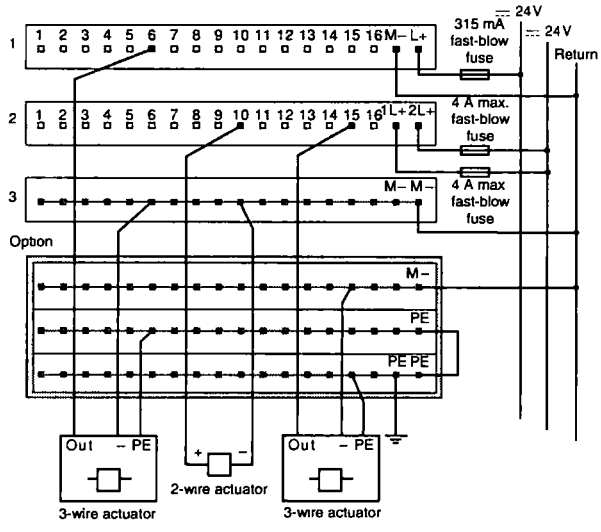

Group of channels

Internal wiring

170ADO83030

Example of external wiring

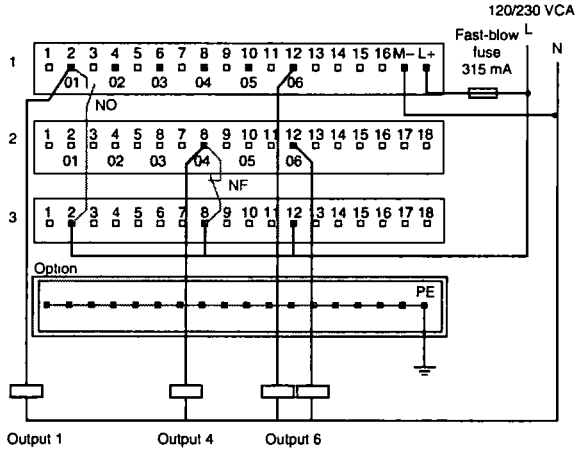

Internal wiring

Connections of discrete output bases (continued)

170ADO53050 / ADO54050

Example of external wiring of 2 and 3-wire actuator

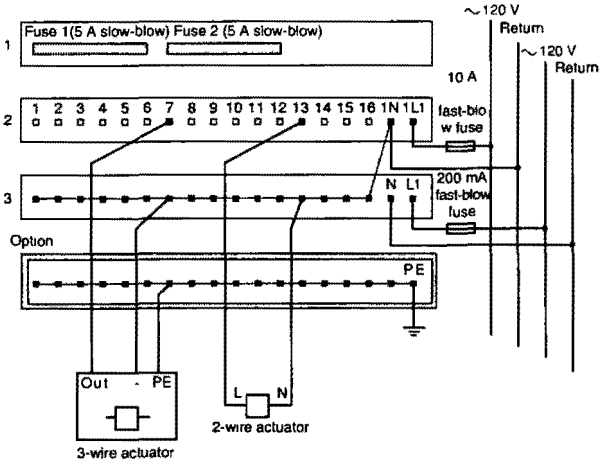

170ADO73050 / ADO74050

Example of external wiring of 2 and 3-wire actuators

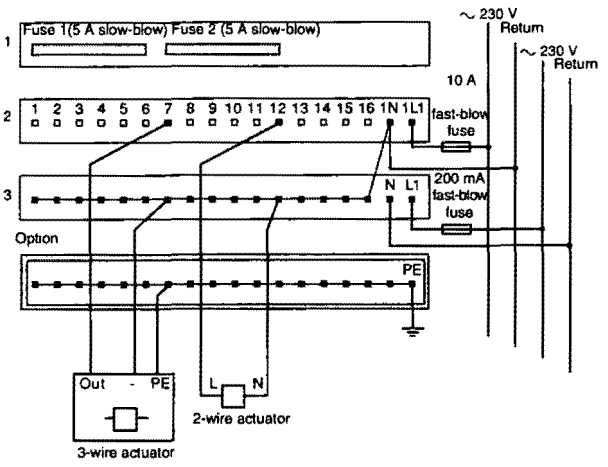

Connections of discrete I/O bases

170ADM35010 / ADM35011 / ADM35015

Example of external wiring of a 2-wire sensor/actuator

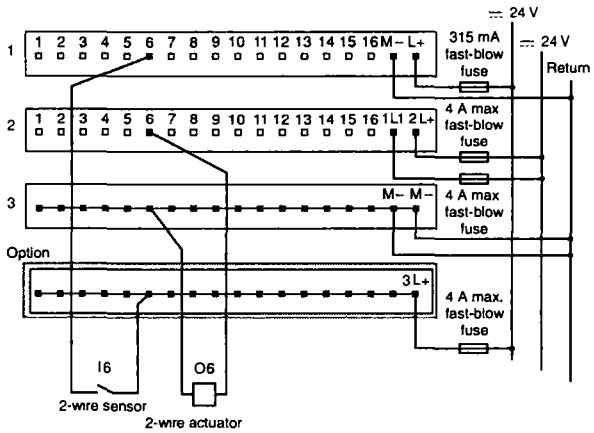

Group of channels

Internal wiring

Example of external wiring of a 3-wire actuator with wiring check

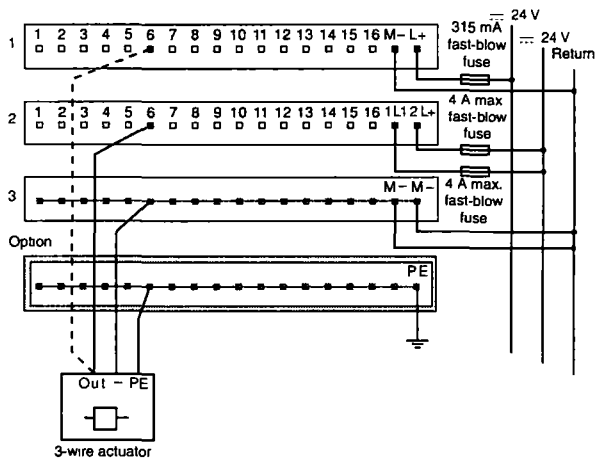

Group of channels

Internal wiring

Example of external wiring of a 4-wire sensor activated by an output

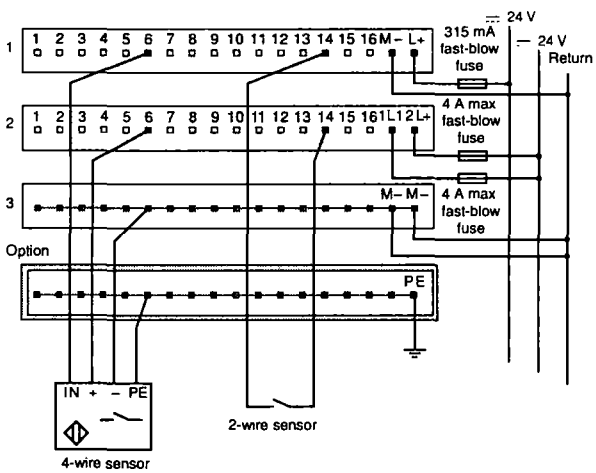

Group of channels

Internal wiring

Example of external wiring of a 4-wire sensor/2-wire actuator

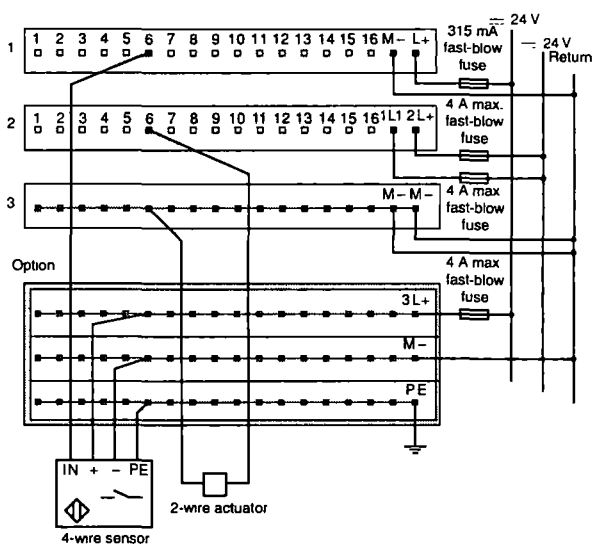

Group of channels

Internal wiring

Connections of discrete I/O bases (continued)

170ADM39010

Example of external wiring of 2-wire sensor/actuator

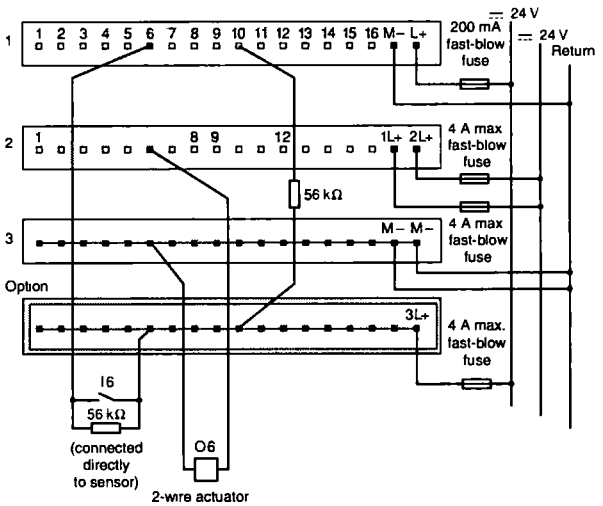

170ADM37010

Example of external wiring of 2 and 4-wire sensors/2-wire actuator

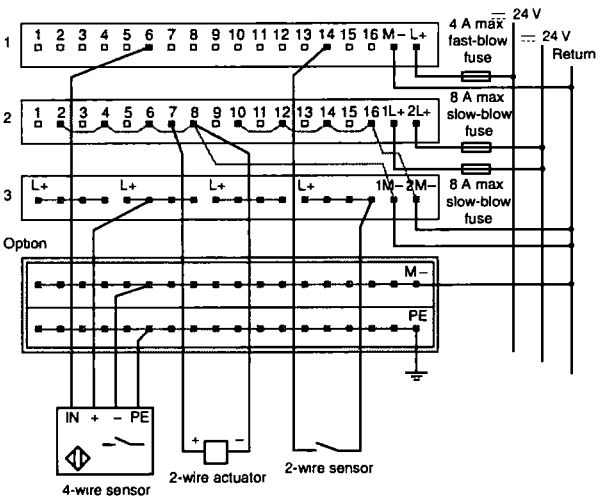

170ADM37010 (continued)

Example of external wiring of 3-wire actuator with wiring check

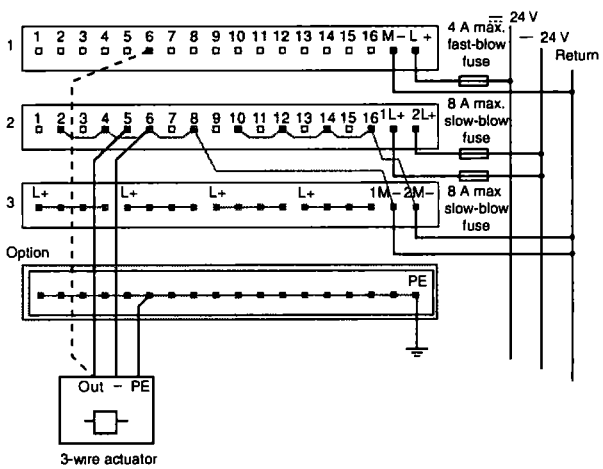

Special external wiring, the output activates the sensor

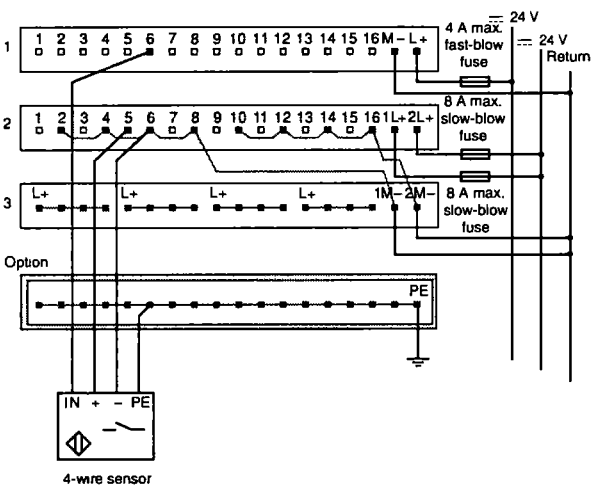

Connections of discrete I/O bases (continued)

170ADM85010

Example of external wiring of:
- 4-wire sensor
- 2-wire actuator
- 3-wire actuator with wiring check
- 2-wire sensor activated by output

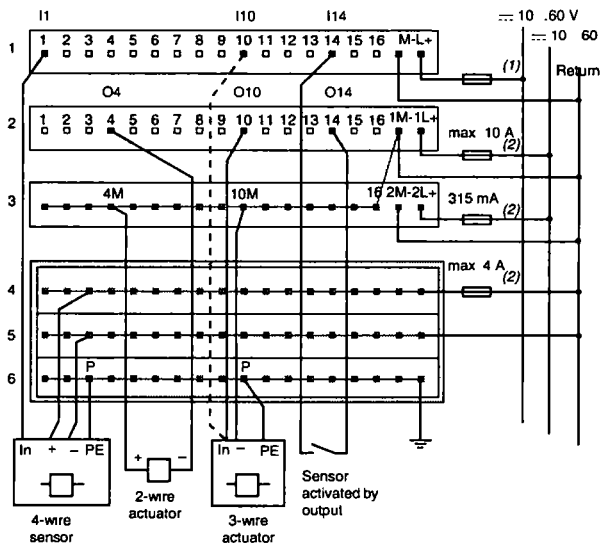

(1) Fast-blow fuse: ⎓ 12 V· 630 mA, ⎓ 24 V· 315 mA, ⎓ 48 V 200 mA.
(2) Fast-blow fuse.

170ADM39030

Example of external wiring of 3 or 4 sensor/3-wire/actuator

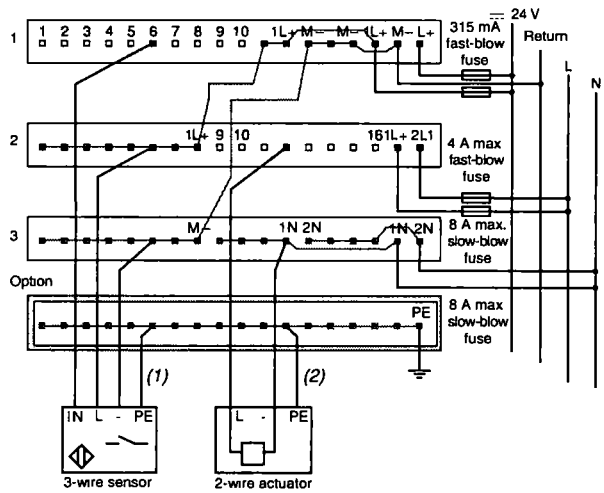

(1) For 4-wire sensor
(2) For 3-wire actuator

170ARM37030

Example of external wiring of 4-wire sensor/3-wire actuator

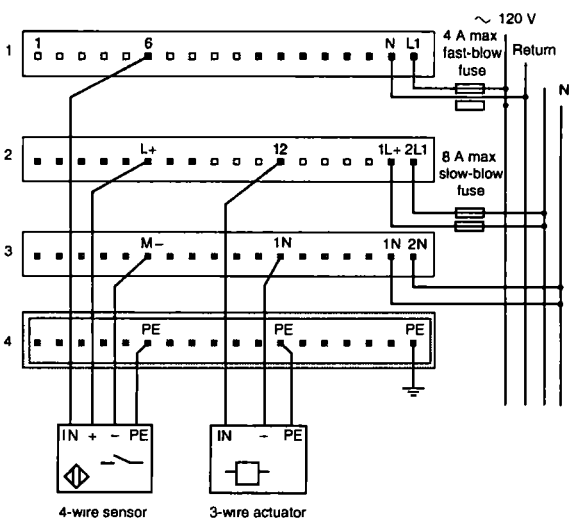

170ADM69051

Example of external wiring of 4-wire sensor/2 and 3-wire actuators

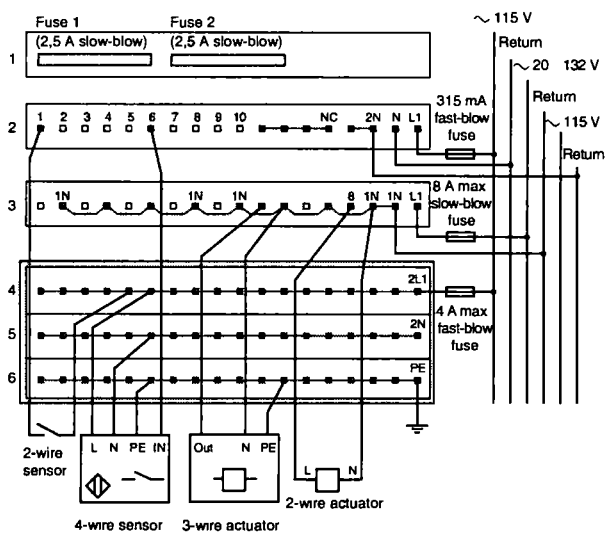

Modicon Momentum automation platform
Analog I/O bases

Applications		24 VDC analog input bases		
		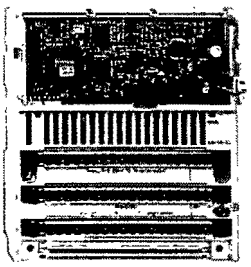		
Operating voltage		24 VDC		
Measurement range		Inputs ± 5 V, ± 10 V, ± 20 mA 1-5 V, 4-20 mA	Inputs ± 5 V, ± 10 V, 4-20 mA	Inputs ± 25 mV, ± 100 mV, Temperature probe Pt 100, Pt 1000, Ni 100, Ni 1000 Thermocouple B, E, J, K, N, R, S, T
Modularity	Input channels	8 differential inputs	16 single-ended inputs	4 differential inputs
	Output channels	–	–	–
	Discrete I/O	–	–	–
Resolution		14 bits + sign bipolar 15 bits unipolar	12 bits + sign	15 bits + sign
Update time		1.33 + 1.33 x no. of declared channels (ms)	1 + 1.5 x no. of declared channels (ms	500 ms
Potential isolation	Between channels	200 VDC, 1 min	None	400 VDC
	Base and ground	500 VDC, 1 min	500 VDC, 1 min	500 VDC, 1 min
	Channels and ground	500 VAC, 1 min	1780 VAC, 1 min	500 VAC
Protection		Polarity inversion		
Number in words	In	8 words in	16 words in	4 words in
	Out	2 words out	4 words out	4 words out
Fail states		–		
Type of communicating module		170AAI03000	170AAI14000	170AAI52040
Pages		29	30	

24 VDC analog output bases		24 VDC mixed I/O bases (analog/discrete)		
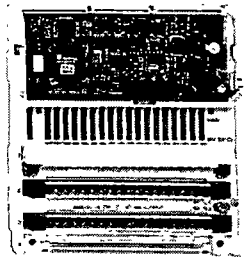		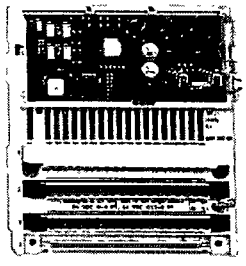		
24 VDC		12 VDC	24 VDC	
Outputs ± 10 V, 0-20 mA	Outputs ± 10 V, 4-20 mA	Inputs ± 5 V, ± 10 V, ± 20 mA 1-5 V, 4-20 mA Outputs ± 10 V, 0-20 mA	Inputs 0 to 10 V Outputs 0 to 10 V	Inputs - 10 to + 10 V Outputs - 10 to + 10 V
–		4 differential inputs	6 inputs with common point	
4 outputs		2 outputs	4 outputs with common point	
–		4 inputs 24 VDC 2 outputs 24 VDC/0.5 A	4 inputs 12 VDC 2 outputs 12 VDC/1 A	8 inputs 24 VDC 8 outputs 24 VDC/0.25 A
12 bits + sign		Inputs: 12...14 bits (dep. on range) Outputs: 12 bits		Inputs: 14 bits Outputs: 14 bits
2 ms		Inputs: 10 ms Outputs: 1 ms		Inputs: 0 75 ms (for 6 inputs) Outputs. 1.2 ms (for 4 inputs)
None		None		
500 VDC, 1 min		500 VAC, 1 min		
500 VAC, 1 min		500 VAC, 1 min		
Polarity inversion		Short-circuits and overloads (for discrete outputs)		
–		5 words in	5 words in	12 words in
5 words out		5 words out	5 words out	12 words out
Hold, reset to zero, reset to full scale		Hold or reset to zero		
170AAO12000	170AAO92100	170AMM09000	170AMM09001	170ANR12090	170ANR12091
31		32		33	

Modicon Momentum automation platform
Analog I/O bases

Presentation

The Momentum analog input bases enable acquisition of various analog values encountered in industrial applications, including:
- Standard high level (± 5 V, ±10 V, 1-5 V, 4-20 mA, ± 20 mA).
- Low level (± 25 mV, ± 100 mV).
- Thermocouples (B, E, J, ...).
- Temperature probes (Ni ..., Pt ...).

The analog output bases are used to control analog field devices such as variable speed drives, proportional control valves, etc. The current or the voltage is proportional to the digital value defined by the user program. The outputs can be configured so that when the program stops the outputs either reset to zero or hold the last value received. This feature is useful during debugging since, if the outputs are set to "Hold", the operation of the analog field devices is not disturbed every time the program stops.

In order to cover a wide range of applications, Momentum I/O bases offer the following functions in addition to A/D or D/A conversion:
- Choice of input/output ranges (voltage, current, thermocouple, temperature probes).
- Selection of number of channels used.
- Cold junction compensation for thermocouple modules.
- Broken wire detection (**170AAI03000, 170AAI14000, 170AAI52040**).

Description

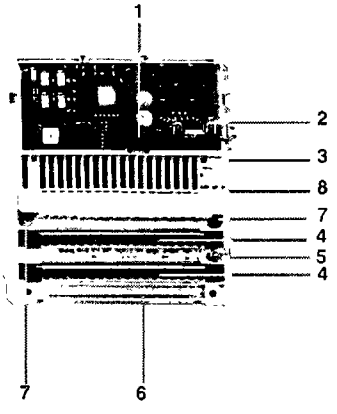

170A●● analog I/O base units comprise on the front panel:
1 Internal interface connector for the communication module or processor module.
2 A locking and earth contact for the communication module or processor module.
3 LED status indicators (the number of indicators will depend on the number of channels).
4 Two connectors for the removable terminal blocks.
5 An grounding screw.
6 A slot for the power strip
7 Two screw holes for panel mounting.
8 A protective cover.

Connectors to be ordered separately:
- removable screw or spring terminal blocks **170XTS00●00.**
- 1 to 3-row screw or spring bus bar **170XTS00● 01**.

Characteristics : pages 29 to 33 | References pages 34 and 35 | Dimensions : page 35 | Connections : pages 36 and 37

Characteristics of analog input bases

Type of base units			170AAI03000				
Number of inputs			1 x 8 differential inputs				
LEDs			Ready (green)				
Format of data			Full 16 bits signed (2's complement)				
Protection	Base and actuators		Polarity inversion				
Ranges			**± 10 VDC**	**± 5 VDC**	**4...20 mA**	**± 20 mA**	**1...5 VDC**
	Input impedance	kΩ	> 0.1000	> 0.1000	250	250	> 0 1000
	Error at 25 °C	%	0.27	0.21	0.27	0.32	0.13
	Error at 60 °C	%	0 32	0.26	0.38	0.41	0.19
	Resolution		14 bits + sign bipolar 15 bits unipolar				
Conversion times		ms	12 ms max for 8 input channels (1.33 ms per input channel + 1 33 ms)				
Error indication			None				
Isolation	Channel to channel	VDC	± 200 for 1 minute				
	Field to ground	VDC	500 for 1 minute				
	Communication adapter to ground	VAC	500 for 1 minute				
Common mode rejection	Channel to ground		250 VAC @ 47 to 63 Hz or 100 VDC				
Crosstalk between channels		dB	≥ 80				
External power requirement	Nominal	VDC	24				
	Limit values	VDC	20 4 to 28.8				
	Current	mA	< 382 @ 24 VDC				
EMC for industrial environment	Immunity		IEC 1131 surge on auxiliary power supply 2 kV				
	Emissions		EN 50081-2				
	Approvals		UL, CSA, CE				

References :
pages 34 and 35

Dimensions :
page 35

Connections :
pages 36 and 37

Characteristics of analog input bases (continued)

Type of base units			170AAI14000			170AAI52040	
Number of inputs			1 x 16 single-ended input			1 x 4 differential inputs	
Format of data			Full 16 bits signed (2's complement)				
Protection	Base and actuators		Polarity inversion				
Error indication			None				
Ranges			**± 10 V**	**± 5 V**	**4...20 mA**	**± 25 mV**	**± 100 mV**
	Input impedance	kΩ	> 2200	> 2200	< 0 250	> 10000	> 10000
	Error at 25 °C		0 15 % FS	0 15 % FS	0.25 % FS	± 21 µV	± 27 µV
	Error at 60 °C		0.25 % FS	0.25 % FS	0.45 % FS	± 46 µV	± 94 µV
	Temperature drift (60 °C)	‰	30 PE / °C	30 PE / °C	60 PE / °C	–	
	PE (Full scale)		10 V	5 V	16 mA	–	
	Resolution		12 bits + sign	12 bits + sign	12 bits	15 bits + sign	
	Filtering		Low pass with cut-off frequency 10 kHz			–	
Current source	Pt100	**mA**	–			–	0.125
	Ni100	**mA**	–			–	0.125
	Pt1000	**mA**	–			0.125	–
	Ni1000	**mA**	–			0.125	–
Update time		**ms**	1 + 1.5 x n n = number of declared channels			500	
Error indication			None				
Potential isolation	Channel to channel	**VDC**	None			400	
	Base power supply and ground	**VDC**	500 for 1 minute			500 for 1 minute	
	Channels to ground	**VAC**	1780 for 1 minute			500 for 1 minute	
	Base power	**V**	± 30 (voltage or current output)			± 30 (voltage or current output)	
	Common mode Channel to ground	**V**	–			± 100 DC, 250 AC	
	Common mode Voltage between channels	**V**	–			200 DC, 115 AC single phase or 3-phase or 250 AC single phase	
Common mode rejection	Channel to ground		250 VAC at 47 to 63 Hz or 100 VDC			135 dB DC, 145 dB AC 50 Hz, 155 dB AC 60 Hz	
	Between channels		–			120 dB DC, 130 dB AC 50 Hz, 140 dB AC 60 Hz	
Serial mode rejection			–			35 dB AC 50 Hz, 45 dB AC 60 Hz	
Input protection			Polarity inversion				
Operating voltage		**VDC**	24				
Internal current		**mA**	305 @ 24 VDC				
Power dissipation	Typical	**W**	4.95			3.5	
	Maximum	**W**	5.55			5.5	
Fusing	Internal		2 A slow-blow			2 A slow-blow	
	External		500 mA fast-blow			500 mA fast-blow	
Agency approvals			UL, CE, CSA, FM Class I, Div. II				

References :
pages 34 and 35

Dimensions :
page 35

Connections :
pages 36 and 37

Characteristics of analog output bases

Type of base units			170AAO12000		170AAO92100	
Number of outputs			1 x 4			
Format of data			Full 16 bits signed (2's complement)			
Protection	Base and actuators		Polarity inversion			
Ranges			**± 10 V**	**0...20 mA**	**± 10 V**	**4...20 mA**
	Load impedance	kΩ	1 minimum	0 6 maximum	1 minimum	0.6 maximum
	Capacitive load	µF	< 1			
	Error at 25 °C	%	0.2 PE	0.3 PE	0.2 PE	0 4 PE
	Error at 60 °C	%	0.25 PE	0 4 PE	0.25 PE	0.5 PE
	Temperature drift (60 °C)	‰	10 PE / °C	30 PE / °C	10 PE / °C	30 PE / °C
	Resolution		12 bits + sign			
	Update time	ms	< 2			
Full scale			10 V in the range of ± 10V 2 mA in the range of 0. .20 mA			
Fail State			Hold, reset to zero, reset to full scale			
Potential isolation	Channel to channel		None			
	Base power supply and ground	VDC	500 for 1 minute			
	Channels to ground	VAC	500 for 1 minute			
	Out protections		Short-circuits in the voltage circuits, open in current polarity inversion			
	Base power	V	± 30 (voltage or current output)			
Common mode rejection		VAC	250 @ 47 to 63 Hz or 250 DC channel to ground			
Operating voltage		VDC	24			
Internal current	Base	mA	530 @ 24 VDC			
	Actuators	mA	150 @ 24 VDC			
Power dissipation	Typical	W	5 6			
	Maximum	W	8 5			
Internal fusing		A	2, slow-blow			
Agency approvals			UL, CE, CSA			

References : pages 34 and 35 | Dimensions page 35 | Connections pages 36 and 37

Characteristics of discrete and analog I/O bases

Type of base unit			170AMM09000			170AMM09001	
Number of inputs and outputs			1 x 4 differential inputs 1 x 4 discrete inputs 1 x 2 analog outputs 1 x 2 discrete outputs				
Operating voltage		**VDC**	24			12	
Internal current		**mA**	200 typical (at 24 VDC), 350 maximum (at 24 VDC)			700 maximum (at 12 VDC)	
Differential inputs for 170 AMM 090 00/090 01	Conversion time		10 ms for all channels				
	Conversion error		**± 10 V**	**± 5 V**	**1 to 5 V**	**± 20 mA**	**4 to 20 mA**
	25 °C	**%**	0.08	0.16	0.16	0.16	0.16
	60 °C	**%**	0.15	0.3	0.3	0.3	0.3
	Resolution		14 bits	13 bits	12 bits	13 bits	12 bits
	Conversion consistency	**%**	± 0.02	± 0.04	± 0.04	± 0.04	± 0 04
	Common mode voltage		Input voltage starting at Ag ± 11 V				
	Common mode suppression	**dB**	> 54			80	
	Over voltage Voltage ranges	**V**	± 30 solid state if voltage is 24 V ± 50 dynamic max 100 ms			± 30 solid state if voltage is 12 V ± 50 dynamic max 100 ms	
	Over voltage current ranges	**mA**	–			> 48	
	Input resistance	**Ω**	1 M			250	
	Fail state		Hold or reset to zero				
Discrete inputs	Voltage	**VDC**	24 typical, 30 maximum			12 typical	
	Signal Type		True high				
	On Voltage	**VDC**	+ 11 to + 30			+ 7.5 to + 15	
	Off Voltage	**VDC**	- 3 to + 5			- 1.5 to + 2.5	
	Input current	**mA**	2.5 minimum at state 1 (6 mA at operating voltage), 1.2 maximum at state 0				
	Input resistance	**kΩ**	4			2 1	
	Response time	**ms**	2.2 from 0 to state 1 3.3 from 1 to state 0				
Analog outputs	Resolution		12 bits for single-phase measuring range 0...20 mA, 12 bits for 2-phase measuring range ± 10 V				
	Conversion time	**ms**	1 for all channels				
	Conversion error 25 °C		max. ± 0.35 % of upper measuring range value				
	Conversion error 60 °C		max. ± 0.70 % of upper measuring range value				
	Output load		⩾ 3 kΩ for voltage output, ⩽ 600 Ω for current output				
Discrete outputs	Voltage	**VDC**	24 typical, 30 maximum				
	Type		Semiconductor				
	Signal Type		True high				
	Current capacity		1 per channel, 2 per group, 2 per module				
	Leakage current	**mA**	< 1 @ 24 VDC			< 1 @ 12 VDC	
	On State Voltage drop	**VDC**	< 0.5 @ 1 A			< 0.5 @ 0.5 A	
	Response time Off to On	**ms**	< 0.1				
	On to Off	**ms**	< 0 1				
	Output protection		The outputs are protected against overload and shorted-circuits				
	Output indicator		1 red LED per "On" output in the event of an overload or shorted-circuits				
	Error message		Message "I/O error" on bus adapter if module is defective				
	Max Switching cycles		1000/hr (inductive load 1 A), 100/s (resistive load 1 A), 8/s (filament load 2.4 W)				
Potential isolation	Discrete input and output		None				
	Analog input to output		None				
	Analog input and output and to operating voltage	**VAC**	500 for 1 minute				
	Operating voltage and all inputs and outputs from ground	**VAC**	500 for 1 minute				
Power dissipation	Typical	**W**	4.0				
	Maximum	**W**	6.0				
Agency approvals			UL, CE, CSA, FM Class I, Div II			UL, CE, CSA	

References : pages 34 and 35
Dimensions : page 35
Connections : pages 36 and 37

Characteristics of discrete and analog I/O bases (continued)

Type of base unit				170ANR12090	170ANR12091
Number of inputs and outputs				1 x 6 analog inputs 2 x 4 discrete inputs 1 x 4 analog outputs 1 x 8 discrete outputs	
Operating voltage			**VDC**	24, range 19 2 to 30	
Internal current			**mA**	400 @ 24 VDC	
Analog inputs	Resolution			14 bit	
	Input range		**VDC**	0 to 10	- 10 to + 10
	Input type			Single-ended	
	Conversion time			0 75 ms maximum for 6 input channels	
	Conversion error			0.2 % @ 25 °C for 0 - 10 VDC inputs	
	Max input signal		**VDC**	15 for voltage input	
	Max temperature drift		**VDC**	10 inputs	
	Input resistance		**MΩ**	>1 for voltage inputs	
Discrete inputs	Voltage		**VDC**	24	
	Configuration			2 groups of 4 inputs	
	Signal Type			True high	
	Minimum on voltage		**VDC**	> 11	
	Maximum off voltage		**VDC**	< 5	
	Input current	Minimum On	**mA**	6	
		Maximum Off	**mA**	2	
	Input voltage	Range	**VDC**	+ 3 to + 32	
		Surge	**VDC**	45 peak for 10 ms	
	Response time	Off to On	**ms**	1 2	
		On to Off	**ms**	1.2	
Analog outputs	Resolution			14 bit	
	Output range		**VDC**	0 to 10	- 10 to + 10
	Conversion time		**ms**	1.20 for all four channels	
	Conversion error			max. + 0.4 % of upper measuring range value @ 25 °C	
	Output load			> 2 kΩ minimum @ 0 to 10 VDC	
	Fail state			Hold or reset to zero	
Discrete outputs	Voltage		**VDC**	10-30 operating, 50 for 1 ms maximum	
	Type			Solid State Switch	
	Signal type			True high	
	Current capacity		**A**	0.25 per point, 2 per group, 2 per module	
	Leakage current		**mA**	0.4 @ 30 VDC	
	Surge current		**A**	2.5 for 1 ms	
	On state voltage drop		**VDC**	< 0 4 @ 0.25 A current	
	Response time	Off to On	**ms**	1.2	
		On to Off	**ms**	1.05	
	Output protection			The Outputs are protected against overload and shorted-circuits	
	Output indicator			1 LED per point	
Potential isolation	Discrete input to output			None	
	Analog input to output			None	
	Analog input and output to operating voltage		**VAC**	500 for 1 minute.	
	Operating voltage and all inputs and outputs from ground		**VAC**	500 for 1 minute	
Power dissipation	Typical		**W**	4.0	
	Maximum		**W**	6.0	
Agency approvals				UL, CE, CSA	

References : pages 34 and 35 | Dimensions page 35 | Connections pages 36 and 37

Modicon Momentum automation platform
Analog I/O bases

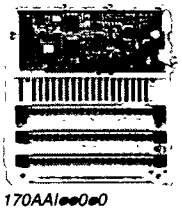
170AAIee0e0

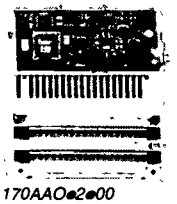
170AAOe2e00

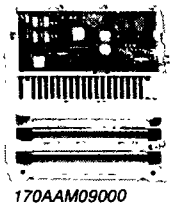
170AAM09000

Analog input bases

Type of inputs	Number of channels	Ranges	Reference	Weight kg
12 bits + sign	16 single-ended	± 5 V, ± 10 V, 4-20 mA	**170AAI14000**	0.215
15 bits + sign	4, differential	Pt 100, Pt 1000, Ni 100 thermocouples B, E, J, K, N, R, S, T	**170AAI52040**	0.215
	8, differential	± 5 V, ± 10 V, 1-5V ± 20 mA, 4-20 mA	**170AAI03000**	0.215

Analog output bases

Type of outputs	Number of channels	Ranges	Reference	Weight kg
12 bits + sign	4	± 10 V, 0-20 mA	**170AAO12000**	0.215
		± 10 V, 4-20 mA	**170AAO92100**	0.215

Discrete and analog I/O bases

Type		Ranges		Reference	Weight kg
Inputs	**Outputs**	**Inputs**	**Outputs**		
4 differential analog 13 bits + sign	**2 analogs 12 bits**	± 5 V, ± 10 V 1-5 V ± 20 mA 4-20 mA	0-20 mA ± 10 V	**170AMM09000**	0.240
4 discrete	**2 discrete 0.5 A**	24 VDC	24 VDC		
4 differential analog 13 bits + sign	**2 analogs 12 bits**	± 5 V, ± 10 V 1-5 V ± 20 mA 4-20 mA	0-20 mA ± 10 V	**170AMM09001**	0.240
4 discrete	**2 discrete 0.5 A**	12 VDC	12 VDC		
6 analog 14 bits	**4 analogs 14 bits**	0-10 V	0-10 V	**170ANR12090**	0.240
2 x 4 discrete	**1 x 8 discrete 0.25 A**	24 VDC	24 VDC		
6 analog 14 bits	**4 analogs 14 bits**	± 10 V	± 10 V	**170ANR12091**	0.240
2 x 4 discrete	**1 x 8 discrete 0.25 A**	24 VDC	24 VDC		

Characteristics : pages 29 to 33 | Dimensions : page 35 | Connections : pages 36 and 37

Modicon Momentum automation platform
Analog I/O bases

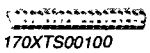
170XTS00100

170XTS00200

170XTS00401

170XTS00501

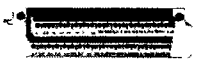
170XTS00801

170XTS00601

CER001

Accessories

Description	Composition	Type of connection	Reference	Weight kg
Terminal blocks	Set of 3 connectors 1 row	Screw	**170XTS00100**	–
		Spring	**170XTS00200**	–
Bus Bar	3 rows	Screw	**170XTS00401**	–
		Spring	**170XTS00301**	–
	2 rows	Screw	**170XTS00501**	–
		Spring	**170XTS00801**	–
	1 rows	Screw	**170XTS00601**	–
		Spring	**170XTS00701**	–
Cable Grounding Rail	Used to connect the cable shielding		**CER001**	–
High vibration environment clips	Used to prewire the I/O base units. Requires screw or spring connection terminals		**170BDM09000**	–

Replacement parts

Description	Use	Reference	Weight kg
Sheets of labels	10 front labels for Momentum modules	**170XTS10000**	–
Set of coding and locating device	For screw or spring connection terminals	**170XCP20000**	–

Dimensions, mounting

170A●●

Rail or panel mounting

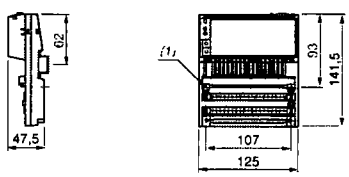

(1) 2 holes for M4 screws, for panel mounting

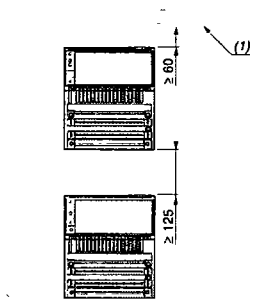

(1) Equipment or enclosure.

Characteristics : pages 29 to 33

Connections : pages 36 and 37

Connections of analog input bases and analog output bases

170AAI03000
Example of external wiring of 2-wire sensor

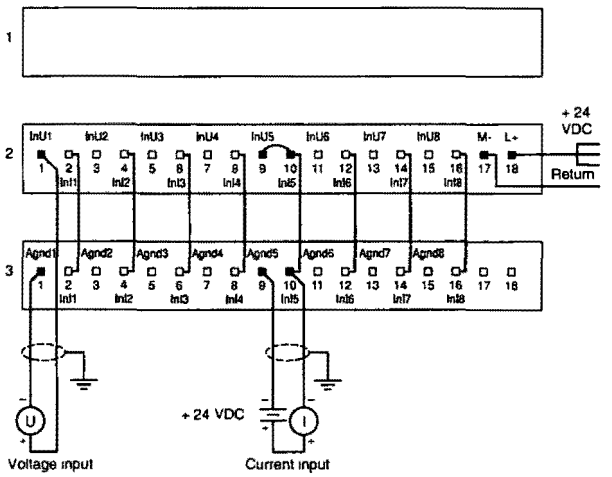

170AAI14000
Example of external wiring of 2-wire sensor

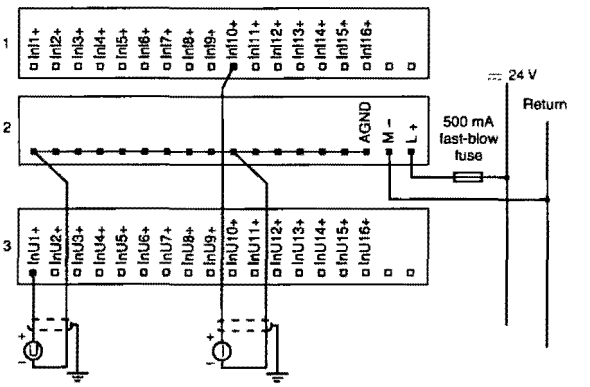

Group of channels

Internal wiring

170AAI52040
Example of external wiring of sensor

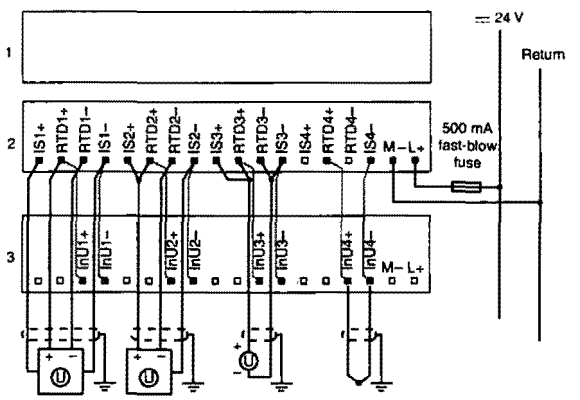

Group of channels

Internal wiring

170AAO120 / 92100
Example of external wiring of 2-wire actuator

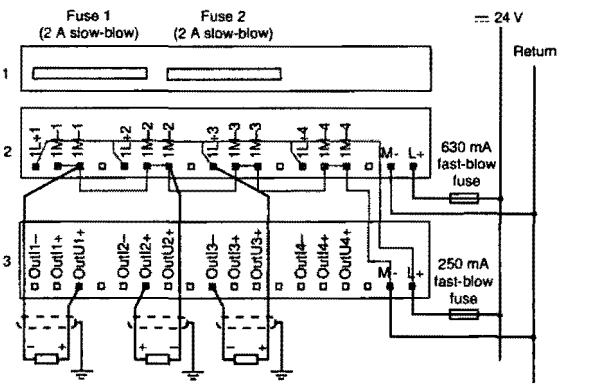

Group of channels

Internal wiring

Modicon Momentum automation platform
Analog I/O bases

Connections of discrete and analog bases

170AMM09000 / AMM09001

Example of external wiring of 2-wire sensor

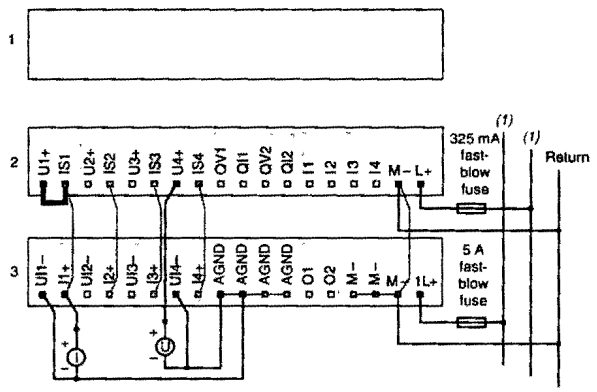

Example of external wiring of 2-wire actuator

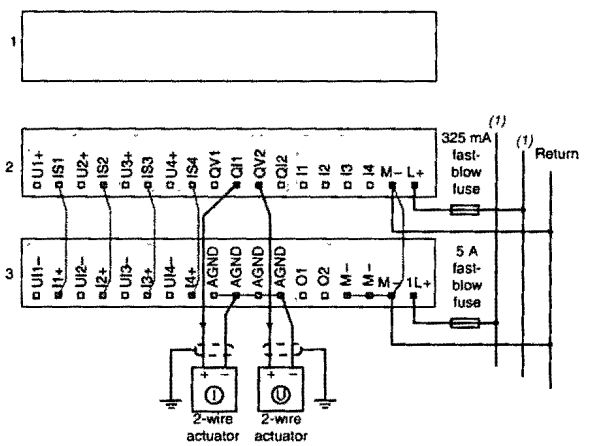

External bridge

Group of channels

Internal wiring

Group of channels

Internal wiring

170AMM09000 / AMM09001 (continued)

Example of external wiring of digital sensor/actuator

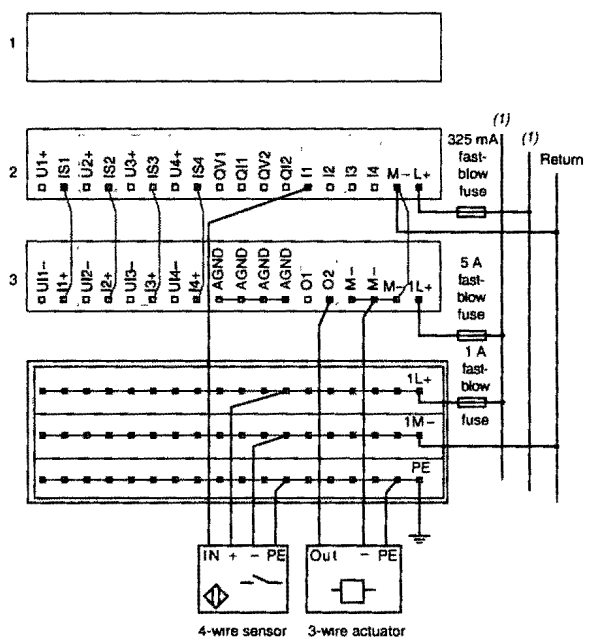

170ANR12090 / 91

Example of mixed discrete and analog I/O sensor/actuator field wiring

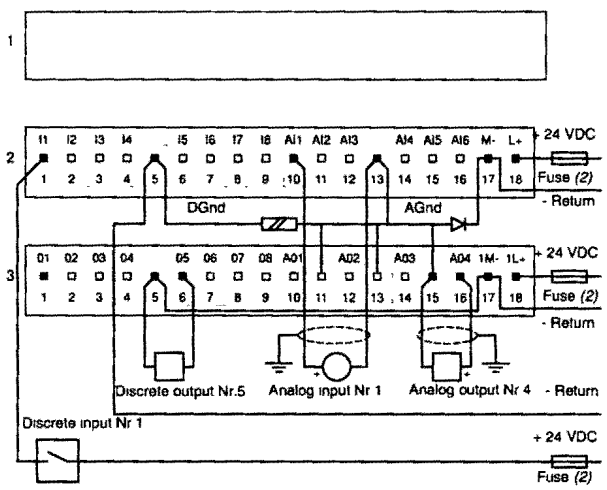

Group of channels

Internal wiring

(1) ⎓ 24 V for 170 AMM 090 00, ⎓ 12 V for 170 AMM 090 01
(2) Depending on application, max 5 A.

Modicon Momentum automation platform

Specialty module I/O bases

Product type		**High-speed counter**

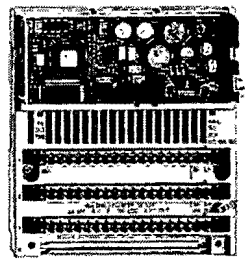

Operating voltage		24 VDC
Unique features		2 independent, high-speed (10 kHz-200 kHz) counters
Modularity	Input channels	6 (3 per counter) True High Inputs
	Output channels	4 (2 per counter) True High Outputs
Input characteristics	Counter inputs	5 VDC differential input, 200 kHz counter; 24 VDC single-end input, 10 kHz counter
	Discrete inputs	6 (2 x 3) 24 VDC inputs: - voltage range, - 3 to + 30 VDC - response time, 3 ms Off to On or On to Off
Output characteristics	Counter outputs	Two 5 VDC differential outputs min 20 mA @ 24 VDC
	Discrete outputs	4 (2 per counter) 24 VDC outputs. - on current, 0.5 A per point, 1 A per counter - response time. < 0.1 ms Off to On, < 0.1 ms On to Off
Protection		
Surge	Input voltage	45 V peak for 10 ms
	Output current	5 A for 1 ms
Type of module		170AEC92000
Pages		41

I/O with Modbus Master Base

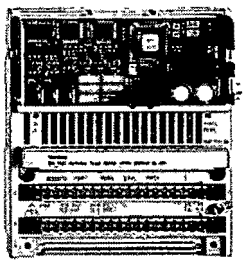

120 VAC

RS 485 2- or 4-wire Modbus port

6 True High Inputs

3 True High Outputs

1 group of 6 inputs (120 VAC @47 to 63 Hz):
- voltage range, 0 to 132 VAC
- response time, < 12.3 ms @ 60 Hz On to Off,
  < 12.5 ms @ 60 Hz Off to On

3 solid state switching outputs (120 VAC @47 to 63 Hz):
- on current, 0.5 A continuous per point, 1.5 A continuous per module
- response time: < 12.3 ms @ 60 Hz On to Off, < 12.5 ms @ 60 Hz Off to On

170ADL54080

41

Modicon Momentum automation platform

Specialty module I/O bases

Presentation

The Momentum specialty module I/O bases provide support for unique applications that broaden the range of the Momentum offering. The specialty modules are:

- a 2-channel, High-speed counter module base - **170AEC92000.**
- a 120 VAC, 6-point input/3-point output module base with a Modbus communication port - **170ADM54080.**

High-speed counter

The **170AEC92000** high-speed counter module base features 2 independent counters, along with 6 discrete inputs and 4 discrete outputs.This base can connect directly to either 5 VDC differential or 24 VDC single-ended encoders. The base supports two operating modes:

- Incremental (up counter, down counter, and quadrature)
- Absolute (SSI up/down counter).

The high-speed counter module can be connected directly to many standard communication networks, for communicating with programmable controllers, industrial computers, and other controllers, by installing one of the snap-on Momentum communication adapters onto the base.

Input/Output module with Modbus communication port

The **170ADM54080** input/output module base has 6 discrete inputs and 3 discrete outputs for direct connection to 2- and 3-wire sensors and actuators, plus a Modbus communication port for connection to serial devices.

This module can also be used as the I/O base for a programmable controller, in either a standalone or distributed I/O configuration, by installing one of the snap-on Momentum M1 processor adapters.

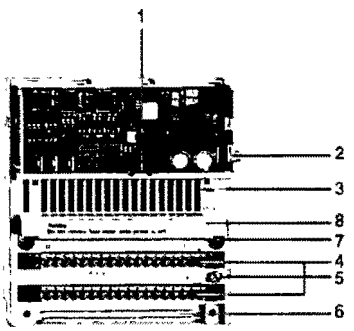

Description

A specialty module I/O bases consists of the following components:

1 Internal interface connector for the communication module.
2 Locking and earth contact for the adapter.
3 LED status display.
4 Two connectors for the removable terminal blocks.
5 Grounding screw.
6 Grounding busbar mounting slot.
7 Mounting holes for a panel mount.
8 Protective cover for fuses (**170ADM54080**) or connector for the removable terminal block.

Characteristics: page 41 | References: page 42 | Connections page 43

Modicon Momentum automation platform

Specialty module I/O bases

Characteristics

Model No.				170AEC92000	170ADM54080
Number of I/O	Counter			2 independent	–
	Inputs			2 x 3 discrete	1 x 6 discrete
	Outputs			2 x 2 discrete	1 x 3 discrete
Discrete inputs	Operating voltage		V	24 DC	120 AC @ 47 to 63 Hz
	Input	Range	V	- 3 to + 30 DC	0 to 132 AC
		Surge	V	45 peak for 10 ms	200 AC for 1 cycle
	Input current	On	mA	2.5 minimum	5 5 minimum
		Off	mA	1.2 maximum	1 9 maximum
	Switching level		V	11 DC minimum on voltage 5 DC maximum off voltage	79 AC minimum on voltage 20 AC maximum off voltage
	Response time	Off to on	ms	3	< 12.5 @ 60 Hz
		On to off	ms	3	< 12.3 @ 60 Hz
	Signal type			True High	
Discrete outputs	Operating voltage		V	24 DC	120 AC @ 47 to 63 Hz
	Signal type			True High	
	On state voltage drop		V	< 0 5 DC @ 0 5 A current	< 1 5 AC @ 0 5 A current
	Fault sensing			Overload and short circuit	1 fuse, 2.5 A @ 250 VAC
	Current capacity		A	0.5 per point	0.5 continuous per point
			A	1 per counter	–
			A	2 per module	1.5 continuous per module
	Current	Leakage	mA	< 1 @ 24 VDC	1.9 @ 120 VAC
		Surge	mA	5 A for 1 ms	30 minimum
	Response time	Off to on	ms	< 0.1	< 12.5 @ 60 Hz
		On to off	ms	< 0.1	< 12.3 @ 60 Hz
Counter inputs	Incremental counters			Up counter, down counter, quadrature	–
	Absolute SSI counter			Up/down counter with 4 sub-modes	–
	Input signals		VDC	5 differential input 24 single-ended input	– –
	Counter speed (max)		kHz	200, differential inputs 10, single-ended inputs	– –
	Counter capacity			24 bits plus sign per counter	–
	Counter configuration			Via communication adapter (8 input words, 8 output words)	–
Modbus port	Type			–	RS-485, 2- or 4-wire
	Communication rates		bit/s	–	19200 and 9600
	Format			–	8-bit RTU / 7-bit ASCII
	Modbus address range			–	0 to 247
	Time-out		ms	–	150 after transmission
Current consumption			mA	280	125 @ 120 VAC
Agency approvals				UL, CE, CSA	

References.
page 42

Connections.
page 43

Modicon Momentum automation platform

Specialty module I/O bases

References

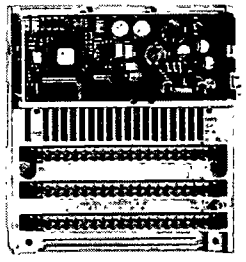

170AEC92000

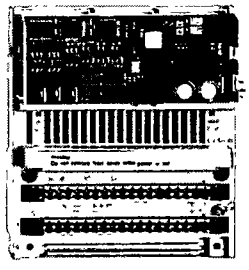

170ADM54080

Modules

Description	Characteristics	Reference	Weight kg
High-speed counter Module Base	2 independent counters	**170AEC92000**	0.210
I/O module base with Modbus communication port	RS 485 Modbus port 6 inputs, 3 outputs	**170ADM54080**	0 240

Replacement parts

Description	Use	Reference	Weight kg
Sheets of labels	10 front labels for Momentum modules	**170XTS10000**	–

Documentation

Description	Use	Reference	Weight kg
Momentum I/O bases	User guide for. 170AEC92000	**870USE00800**	–
	170ADM 4080	**870USE00200**	–

Accessories. *Terminal blocks, bus bar, cable grounding rail and discrete input simulator, see page 19.*

Characteristics: page 41
Connections page 43

Connections

170AEC92000

A 2-encoder and input/output field wiring example

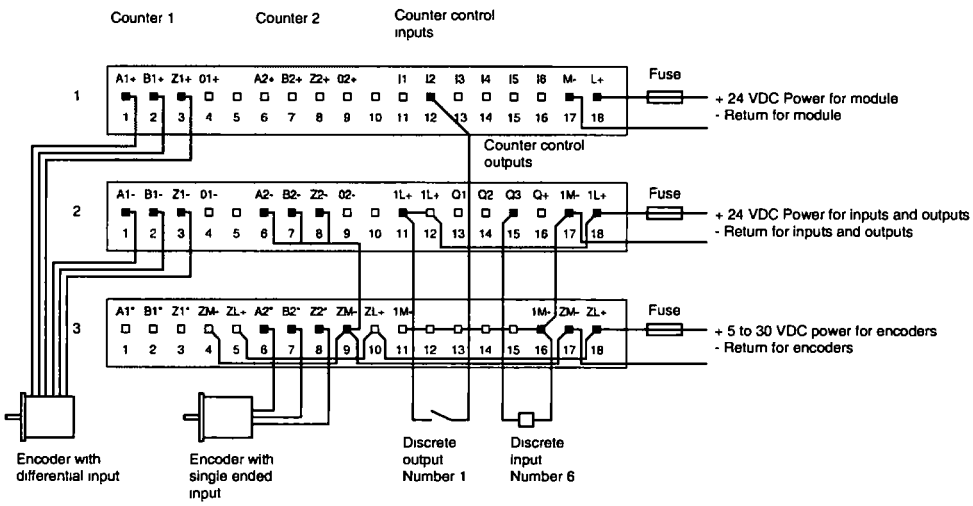

170ADM54080

A Modbus device and input/output field wiring example

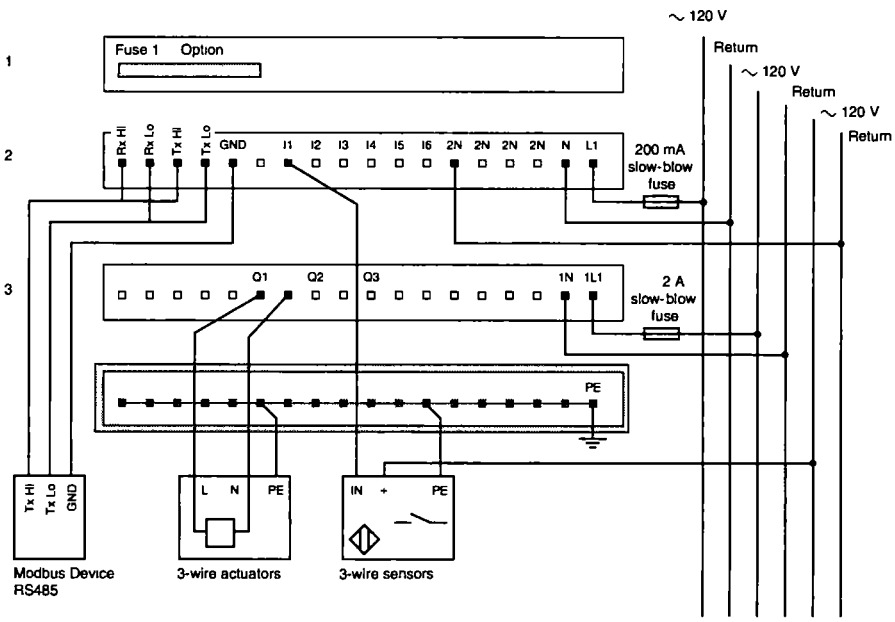

Modicon Momentum automation platform
Communication adapters

Applications	Communication adapters for Ethernet TCP/IP	
Bus and network type	Ethernet TCP/IP	
	Transparent Ready Class	
	A10	B20
Topology — Physical interface	IEEE 802.3 standard	
Method of access	CSMA-CD	
Bit rate	10 M bit/s	10/100 Mbit/s
Medium — Type	Twisted pair CAT5	
Topology	Star	
Redundancy	No	
Maximum number of devices	64	
Maximum length	1000 m per segment	
Type of communicating module	170ENT11002	170ENT11001
Pages	49	

Communication adapters for INTERBUS			Communication adapter for Profibus DP bus	Communication adapter for DeviceNet network
INTERBUS		INTERBUS I/O bus	Profibus DP	DeviceNet
SUPI 3		SUPI 2		
DIN 19 258 standard			EN 50170 standard	–
Master/Slave			Master/Slave	CSMA-CD
500 K bit/s			12 Mbit/s...9.6 K bit/s depending on length	500 Kbit/s
Twisted pair	Fiber optic	Twisted pair	Twisted pair	Multidrop
Ring			Multidrop, ring	Multidrop
No			No	No
40 per installation remote bus module (up to 254 bus terminal modules)			32 without repeater 126 with repeaters	64
12800 m			1200 m	500 m with repeaters
57			59	61

Modicon Momentum automation platform
Communication adapters

Applications	Communication adapters for Modbus Plus network		
	IEC Data Format		984 Data Format
Bus and network type	Modbus Plus		
Topology — Physical interface	Modbus Plus		
Topology — Method of access	Token bus		
Topology — Bit rate	1 Mbit/s		
Medium — Type	Twisted pair		
Medium — Topology	Multidrop		
Medium — Redundancy	No	Yes	No
Maximum number of devices — Per segment	32		
Maximum number of devices — Overall	64 (without repeaters)		
Maximum length	5 000 m with repeaters		
Type of communicating module	170PNT11020	170PNT16020	170NEF11021
Pages	51		

Communication adapters for Modbus Plus network 984 Data Format	Communication adapters for Fipio bus for TSX Series 7 and April 5000	for Premium PLCs
	Fipio	
Modbus Plus	Fip standard	
Token bus	Bus managed by bus arbitrator	
1 Mbit/s	1 Mbit/s	
Twisted pair		
Multidrop		
Yes	No	
32		
64 (without repeaters)		128
5 000 m with repeater		15 000 m with repeaters
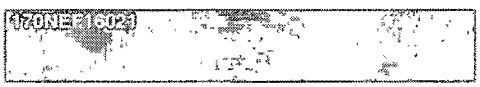		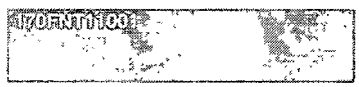
51	55	

Modicon Momentum automation platform

Ethernet TCP/IP communication adapters

Presentation

The Model **170ENT11002** and **170ENT11001** Ethernet communication adapters for the Momentum I/O product line provide a direct connection to Ethernet-based networks for the entire family of Momentum I/O modules. This connectivity enables communications with a full range of Ethernet TCP/IP compatible control products that includes programmable controllers, industrial computers, motion controllers, operator control stations, host computers, and other controls. This communication network provides a flexible, cost-effective solution for communicating factory floor information to various layers of an integrated manufacturing facility.

The 100BASE-TX Ethernet communication adapter, the **170ENT11001** (and the 10BASE-T adapter, the **170ENT11002**) are single adapters designed to plug on to any of the Momentum Input/Output module bases, and conform to the requirements of the Ethernet communication network.

The Ethernet IP addressing scheme allows an unlimited number of Momentum I/O modules or connections on the network. Using standard Ethernet hubs, routers, and bridges, the performance and distance capability of the Ethernet network can be tailored to meet the requirements of almost any control application.

The Ethernet communication adapter uses the standard Modbus message structure and control commands over the TCP/IP protocol, which simplifies implementation by control engineers while providing information that can be communicated over standard network media to all enterprise applications.

Since Modbus on TCP/IP over Ethernet is supported by Schneider Electric's Quantum and Premium controller families, Momentum I/O can be added to existing control systems where additional I/O capacity of a distributed I/O sub-network is needed.

The Ethernet communication adapter requires connection to a BOOTP server for setting the module's IP parameters, including its own unique IP address, default gateway, and sub-net mask, all of which is stored in the communication adapter's flash memory. Schneider Electric's automation business offers BOOTP Lite Ethernet software as a free download from the Telemecanique Internet web site www.telemecanique.com.

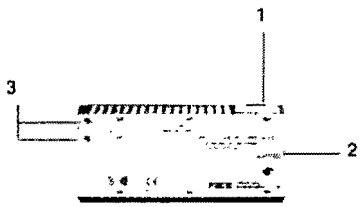

Description

The **170ENT1100●** Ethernet communication adapters comprises on the front panel:

1 Ethernet RJ45 connector for 100BASE-TX interface for **170ENT11001**) or 10BASE-T interface for **170ENT11002**).
2 Area for Label (label shipped with I/O base).
3 LED Status Indicators comprising for the **170ENT11002**:
- Run (green), module health,
- LAN Active (green), Ethernet network status.

LED Status Indicators comprising for the **170ENT11001**:
- Run (green), module health,
- 10T (green), 10 M bit/s network activity,
- 100T (amber), 100 M bit/s network activity,
- ST (green), Ethernet network status.

Modicon Momentum automation platform

Ethernet TCP/IP communication adapters

Characteristics

Model No			170ENT11002	170ENT11001
Communication network			Ethernet TCP/IP	
Media			Shielded twisted pair cable	
Communication rate		M bit/s	10	10/100
Distance		m (ft.)	100 (328) per segment	
Connectors			RJ45, 10BASE-T	RJ45, 100BASE-TX
Transparent Ready services	Class		A10	B20
	Standard Web server		–	"Rack Viewer" access to the product description and status and to base unit diagnostics "Data editor" access to the configuration functions and variables
	Standard Ethernet TCP/IP communication services		Modbus Messaging (read/write data words)	
			–	FDR client for automatic assignment of the IP address and network parameters SNMP agent, detection of the product by an SNMP manager
Adapter configuration			BOOTP server to assign IP parameters	
Flash memory			128 K for IP parameter storage	
Error checking			CRC-32 error check	
Error and fail states			Fail safe	
Addressing			Unique IEEE global address, IP address user assigned	
Mode of operation			Master slave, peer-to-peer	
Topology			Multi-drop bus, star	
Packaging			Standard momentum communications adapter enclosure - IP 20 environment	
Indicator lights			Run and activity lights	Run, 10 M bit/s, 100 M bit/s, and status lights
Power source			Power supply on-board the I/O base	
Hot swapping of modules			Yes	
Agency approvals			UL, CE, CSA, FM Class I, Div. II	UL, CE, CSA

References

105139

170ENT11002

Communication adapters

Description	Communication rate Transparent Ready Class *(1)*	Reference	Weight kg
Ethernet TCP/IP communication adapters	10 M bit/s A10	**170ENT11002**	0.070
	10/100 M bit/s B20	**170ENT11001**	0.070

Accessories

ConneXium cabling system	See page 78	–
BOOTP Lite Ethernet Software	Download from www.telemecanique.com	
Ethernet TCP/IP communication adapter user guide	See page 97	–

(1) Transparent Ready Class A10 and B20, for more details, consult our catalog "Transparent Ready, Ethernet TCP/IP and Web technologies"

Modicon Momentum automation platform

Modbus Plus communication adapters

Presentation

Modbus Plus communication adapters for the Momentum I/O product line can be plugged into any Momentum I/O base to create a functional I/O unit on the Modbus Plus bus, and to provide a direct connection to the Modbus Plus Network for the full family of Momentum I/O modules. This connectivity enables communications with all of the Modbus Plus compatible control products - including programmable controllers, industrial computers, operator control stations, drive systems, and other controls - to provide a flexible, cost-effective solution for distributing I/O modules throughout a large area. To expand the capabilities of the Modbus Plus Network for distributed I/O applications, the communication adapters have been designed to permit up to 64 Momentum I/O modules to be connected to the network without the need for signal repeaters.

Each Momentum I/O module is an individual node on the Modbus Plus network with its address user-selected on the dual rotary switch on the front of the communication adapter. The Momentum I/O modules can be configured for the network, and assigned program reference numbers, by using either the Peer Cop function or the MSTR function block instruction in the programmable controller or the Modbus Plus configuration in an industrial computer.

There are four types of communication adapters available:
- **170PNT11020**, Single Port, IEC Data Format
- **170PNT16020**, Redundant Port, IEC Data Format
- **170NEF11021**, Single Port, 984 Data Format
- **170NEF16021**, Redundant Port, 984 Data Format.

IEC Data Format

This version of the Momentum Modbus Plus communication adapter communicates I/O data to the programmable controller in the IEC data format, which has bit numbering 0 through 15, right to left, within the data word (i.e., input or output number 1 is bit number 0).

984 Data Format

This version of the Momentum Modbus Plus communication adapter communicates I/O data to the programmable controller in the traditional 984 data format, which has bit numbering 1 through 16, left to right, within the register (i.e., input or output number 1 is bit number 1).

Since Modbus Plus is supported by the Quantum and 984 controller families, Momentum I/O can be added to existing control systems where additional I/O capacity or a distributed I/O sub-network is needed, because of requirements for the control system. See page 52 for typical control systems using Momentum I/O modules on the Modbus Plus network with programmable controllers and industrial computer systems.

Char acte ris tics: page 51
Référence: page 53

Modicon Momentum automation platform

Modbus Plus communication adapters

Description

Each 170 PNT/NEF communication module comprises:

1 Three indicator lights (LEDs):
- MB + ACT indicator light (green): module powered up or communicating.
- ERR A indicator light (red): communication error network A.
- ERR B indicator light (red): communication error network B. (for redundant model).

2 A 9-way male SUB-D connector for connecting to the Modbus Plus network.

3 A 9-way male SUB-D connector for a redundant Modbus Plus network.

4 A slot for an identification label (supplied with all I/O sub-bases).

5 Two switches for coding the slave address on the bus.

Characteristics

Type of module		170PNT11020	170PNT16020	170NEF11021	170NEF16021
Communication network		Modbus Plus			
Master PLC on the network		Quantum, Premium	Quantum	Quantum, Compact 984	
Structure	Type	Industrial			
	Redundancy	No	Yes	No	Yes
	Topology	Multi-drop, devices connected using extension cable or tap-off cable			
	Length	5,000 m (6000 ft.) maximum with repeaters			
	Access method	Token bus			
Transmission	Bit rate	1 M bit/s			
	Medium	Twisted pairs			
Data Format		IEC Data Format		984 Data Format	
Number of Momentum devices	Per segment	31 connection points			
	Maximum	63 for all segments			
Power source		Power supply on-board the I/O base			
Behavior in the event of a communication error		Discrete I/O. forcing to state 0 Analogue I/O configurable (maintain value, fallback to 0 or full scale value)			
Services		Configuration. Peer cop and MSTR function block, "peer-to-peer" mode			
Agency approvals		UL, CE, CSA, FM Class I, Div. II		UL, CE, CSA	

Référence
page 53

Modicon Momentum automation platform

Modbus Plus communication adapters

Network topology

Momentum I/O modules in a distributed control system

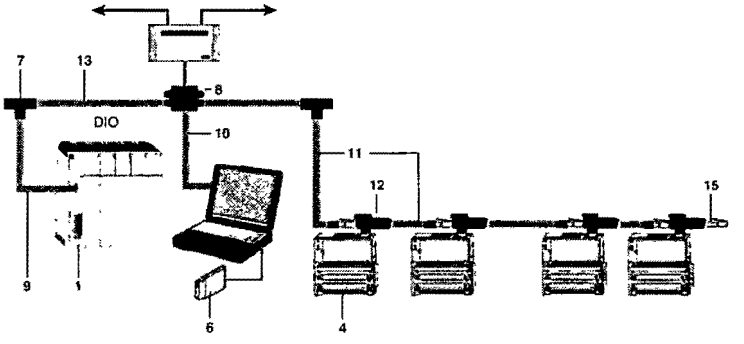

Momentum I/O modules with Modbus Plus double cable in a distributed and redundant control system

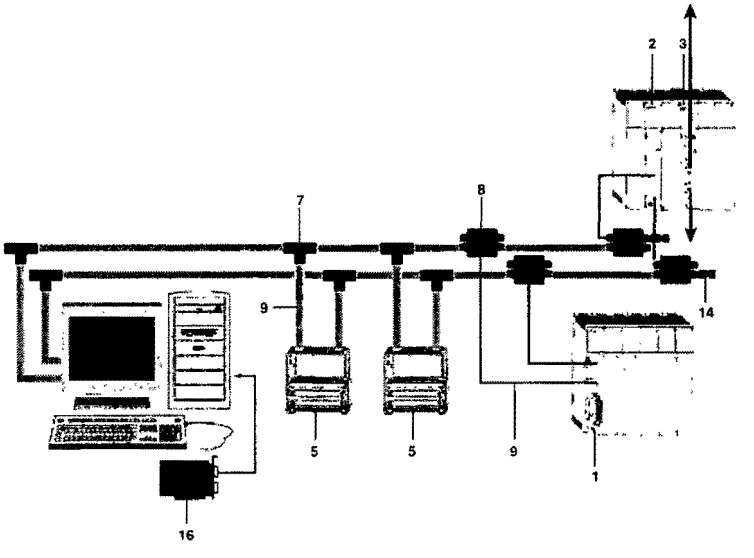

1 **140CRA21110**: Quantum Modbus Plus drop interface and power supply, single-cable support, 115/230 VAC.
2 **140NOM21200**: Quantum Modbus Plus head-end interface, redundant support, twisted pair cable.
3 **140NOM25200**: Quantum Modbus Plus Head-end Interface, single-cable support, fiber optic cable.
4 **170PNT11020** or **170NEF11021**: Momentum Modbus Plus communication adapter, non-redundant network.
5 **170PNT16020** or **170NEF16021**: Momentum Modbus Plus communication adapter, redundant network.
6 **416NHM21233**: Modbus Plus type III PCMCIA Card, single port;
Or **416NHM21234**: Modbus Plus type III PCMCIA Card, single port, "plug and play".
7 **990NAD23000**: Modbus Plus tap, IP 20.
8 **990NAD23010**: Modbus Plus tap, IP 65.
9 **990NAD21110 / 30**: Modbus Plus drop cable (lengths: 2 or 4 or 6 m).
10 **990NAD21510**: Modbus Plus ruggedized tap programming Cable, 3.05 m.
11 **170MCI 020 / 021●●**: Modbus Plus RJ45 cable (lengths: 0.25, 1, 3 or 10 m).
12 **170XTS02000**: Modbus Plus "T" connector (DB9 base).
13 **490NAA2710●**: Sandard Modbus cable (lengths: 30, 150, 300, 450 or 1500 m).
14 **990NAD23011**: Modbus Plus ruggedized tap terminators.
15 **170XTS02100**: Modbus Plus RJ45 terminator.
16 **416NHM30032**: Modbus Plus PCI PC adapter Card, dual ports.

Characteristics: page 51
References: page 53

Modicon Momentum automation platform

Modbus Plus communication adapters

170PNT11020 / NEF11021

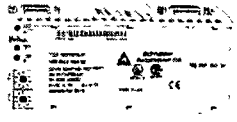

170PNT16020 / NEF16021

References

Description	Connection	Item (1)	Bus master PLC	Reference	Weight kg
Communication adapters for Momentum I/O sub-bases	Non-redundant Modbus Plus network	4	Premium, Quantum	**170PNT11020**	–
			Compact 984	**170NEF11021**	–
	Redundant Modbus Plus network	5	Quantum	**170PNT16020**	–
			Compact 984	**170NEF16021**	–

Description	Use	Mounting on	Item (1)	Reference	Weight kg
Modbus Plus taps	IP 20 junction box for tap-off connection "T"	–	7	**990NAD23000**	0.230
	IP 20 junction box for tap-off connection "T", connection of cable on screw terminal block with one RJ45 connector in front	DIN profile	–	**990NAD23020**	–
		Panel	–	**990NAD23021**	–
	Modbus Plus Tap (IP 20), standard Modbus cable with one RJ45 connector in front	Panel	8	**990NAD23010**	0.650
	IP 20 "T" with 2 RJ45 connectors for Modbus cable and one 9-way SUB-D connector for tap link devices	–	12	**170XTS02000**	0.260
Terminator connector kit (set of 2)	2 impedance adaptors for box (IP 20) 990 NAD 230 20/21	–	1	**990NAD23022**	–
	2 impedance adaptors for box (IP 20) 990 NAD 230 10	–	14	**990NAD23011**	–
	2 impedance adaptors for tee (IP 20) 170 XTS 020 00	–	15	**170XTS02100**	–

Connection cables

Description	Use		Item (1)	Length	Reference	Weight kg
	From	To				
Standard Modbus Plus cables	T-junction box 990 NAD 230 00, 990 NAD 230 11	T-junction box 990 NAD 230 00, 990 NAD 230 11	13	30 m	**490NAA27101**	–
				150 m	**490NAA27102**	–
				300 m	**490NAA27103**	–
				450 m	**490NAA27104**	–
				1500 m	**490NAA27106**	–
Modbus Plus cable for RJ45	"T" 170 XTS 020 00	"T" 170 XTS 020 00	11	0.25 m	**170MCI02110**	–
				1 m	**170MCI02136**	–
				3 m	**170MCI02120**	–
				10 m	**170MCI02180**	–
Modbus Plus Drop cables	Communication modules for Momentum I/O sub-bases 170 PNT/NEF	T- junction box 990 NAD 230 00/10	9	2.4 m	**990NAD21110**	–
				6 m	**990NAD21130**	–

Description	Use		Length	Reference	Weight kg
	From junction box	To equipment, cable outlet of 9-way SUB-D type connectors			
Modbus Plus Drop Cable	Flying leads	Left side	2.4 m	**990NAD21810**	–
			6 m	**990NAD21830**	–
		Right side	2.4 m	**990NAD21910**	–
			6 m	**990NAD21930**	–

ASMBKT085

Connecting accessories

Description	Use for	Reference	Weight kg
RJ45 Crimp tool	Crimping the RJ connectors	**490NAB00010**	–
9-way female SUB-D connector	Communication module connection	**ASMBKT085**	–
Wiring tool	Fitting trunk cables and drop cables in local site tap	**043509383**	–
Other connection accessories		See page 77	

(1) Item, see page 52.

Characteristics: page 51

Modicon Momentum automation platform

Fipio communication adapters

Presentation

The Fipio communication adapter can be plugged into a Momentum I/O base to create a functional I/O unit on the Fipio bus, and to provide a direct connection to the Fipio Network for the full family of Momentum I/O modules. This connectivity enables the Momentum I/O to be used along with other Fipio compatible control devices, including industrial computers, operator control stations, drive systems, and other controls, to provide a flexible, time-critical, cost-effective solution for distributing I/O modules throughout a large area.

There are two types of communication adapters available:
- **170FNT11001** *(1)* for a Fipio bus connected to a Premium PLC.
- **170FNT11000** for a Fipio bus connected to TSX 7 series CPUs or APRIL 5030 and 5130 CPUs.

Each Momentum I/O module is an individual node or device on the Fipio network with its address set by the user on the dual rotary switch on the front of the communication adapter. Fipio is a network that can have up to 128 slave devices. The Fipio network's distance and communication capabilities range from 1000 meters (3330 ft.) to 15000 meters (45000 ft.) with repeaters over twisted pair cable at a data rate of 1 M bit/s.

(1) The Fipio communication adapter **170FNT11001** *does not support the* **170ADM54080** *I/O base*

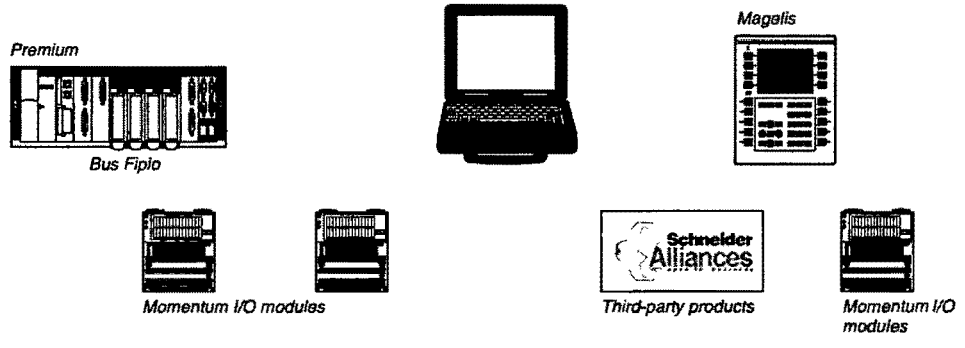

Description

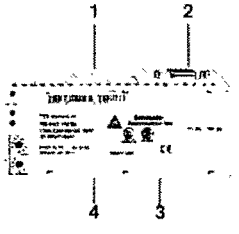

The **170FNT1100●** communication module comprises:
1 Three indicator lights (LEDs):
- Ready indicator light (green): module powered up or in service.
- COM indicator light (yellow): data being sent or received.
- ERR indicator light (red): faulty device.

2 A 9-way male SUB-D connector for connecting to the Fipio bus
3 A slot for an identification label (supplied with all I/O sub-bases).
4 Two switches for coding the slave address on the bus.

Modicon Momentum automation platform
Fipio communication adapters

Characteristics

Type of module		170FNT11001	170FNT11000
Communication bus		Fipio	
Bus manager PLC		Premium	TSX Series 7, model 40 or April 5000
Structure	Type	Open industrial, conforming to the WorldFip standard	
	Topology	Devices connected using extension cable or tap-off cable	
	Length meters	1,000 to 5,000 depending on the medium used	
	Access method	Producer/consumer principle, managed by a bus arbiter	
Transmission	Bit rate	1 M bit/s	
	Media	Shielded twisted pair cable 150 Ω. Fibre optic 62.5/125 or 50/125 with electrical/optical repeaters	
Number of Momentum devices	Per segment	31 connection points (without repeater)	
	Maximum	97 on all segments	61 on all segments
Behavior in the event of a communication error		Discrete I/O: forcing to state 0	
		Analogue I/O: configurable (maintain value, fallback to 0 or full scale value)	
		Other charactenstics, consult our catalog Premium automation platform	
Agency approvals		UL, CE, CSA	

References

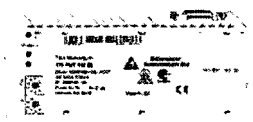

170FNT11001 / 00

TSXFPACC12

TSXFPACC14

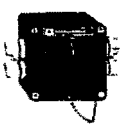

TSXFPACC4

Description	Connection	Bus manager PLC	Reference	Weight kg
Communication adapters for Momentum I/O sub-bases	Fipio field-bus on Momentum I/O sub-bases	Premium	**170FNT11001** *(1)*	0.110
		TSX Series 7, Model 40, April 5000	**170FNT11000**	0.110

Description	Connection	Bus manager PLC	Reference	Weight kg
Female connectors (9-way SUB-D)	On 170 FNT 110 0● communication module	Black poly carbonate IP 20	**TSXFPACC12**	0.040
		Zamac	**TSXFPACC2**	0 080
Bus connection boxes	Main tap-off cable	Black poly carbonate IP 20	**TSXFPACC14**	0.120
		Zamac IP 65	**TSXFPACC4**	0 660
Tap-link cables	8 mm, 2 shielded twisted pair 150 Ω	100 m	**TSXFPCC100**	5.680
		200 m	**TSXFPCC200**	10.920
		500 m	**TSXFPCC500**	30.000
Other connection accessories			Consult our catalog "Premium automation platform"	–
Fipio Communication Adapter User Guide			See page 97	–

(1) Does not support the **170ADM54080** *I/O base*

Modicon Momentum automation platform

INTERBUS communication adapters

Presentation

The Momentum INTERBUS communication adapter provides a direct connection to the INTERBUS Network for the full family of Momentum I/O modules. This connectivity enables Momentum I/O to be used in open architecture control systems that utilize either a programmable controller or industrial computer as the network master. In these applications, INTERBUS serves as the communication network that connects Momentum I/O modules, along with other INTERBUS compatible control devices, for the communication of input and output information with a single master controller.

There are three types of INTERBUS adapters available:
- **170INT11000**, twisted pair media, SUPI 2.
- **170INT11003**, twisted pair media, SUPI 3, supports G4 diagnostic.
- **170INT12000**, fiber optic media, SUPI 3, supports G4 diagnostic.

The INTERBUS communication adapter is designed to plug on to any of the Momentum Input/Output module bases, thus allowing the I/O module to be accessed over the INTERBUS Communication Network. Each Momentum I/O module is an individual node or device on the INTERBUS network with its address set either by its physical location on the network, or by menu-driven software that is available with some INTERBUS master devices. INTERBUS is a cost-effective method of distributing I/O modules throughout large plant areas. The figure below illustrates a typical control system using Momentum I/O modules on the INTERBUS network, with a Quantum PLC programmable controller as the network master.

Network Topology

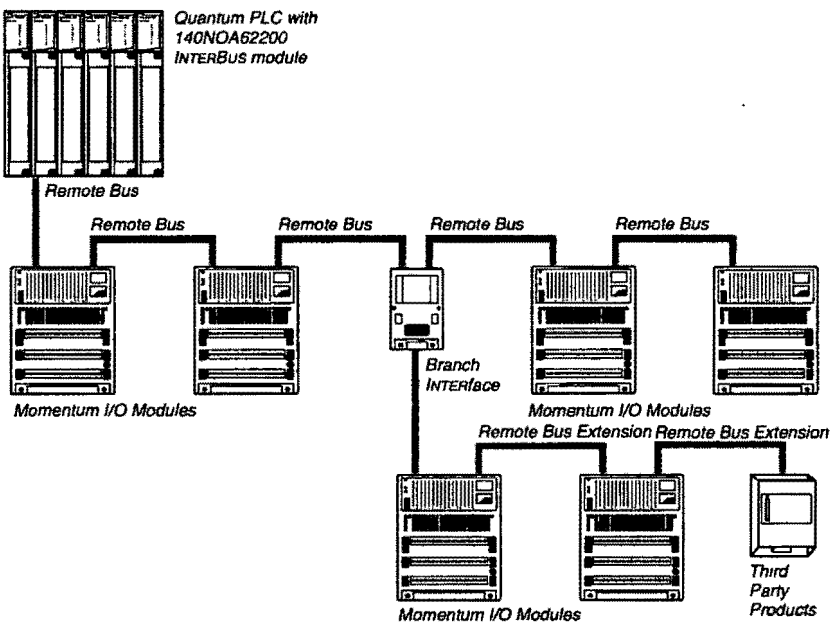

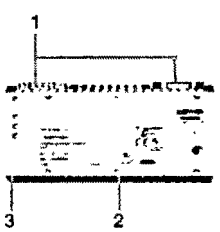

Description

The **170INT1100●** INTERBUS communication adapters comprise on the front panel:
1 Two 9-Pin SUB-D connectors for connection to the INTERBUS bus.
2 Area for Label (label shipped with I/O base).
3 LED Status Indicators comprising for 170INT11000 / 11003 only:
- UL (green), logic power check, for 170INT11003 only.
- BA (green), bus enabled.
- RC (green), remote bus check.
- RD (yellow), remote bus disabled.

Modicon Momentum automation platform

INTERBus communication adapters

Characteristics

Model No.		170INT11000	170INT11003	170INT12000
Communication network		INTERBUS, I/O BUS	INTERBUS	
Communication rate	K bit/s	500		
Number of nodes (devices)		Up to 254 devices		
Media		Twisted Pair		Fiber Optic
Distance	m (ft.)	Up to 12 800 (41 984 ft), 400 (1312 ft.) between two nodes		
Connectors		2-9 Pin "D" connectors		
Error checking		CRC-16 error check		
Error and fail states		Fail safe		
Addressing		Physical location or software		
Mode of operation		Master-Slave, continuous shift register		
Topology		Ring		
INTERBUS generation		SUPI 2	SUPI 3	
Packaging		Standard Momentum communication adapter enclosure - IP 20 environment		
Indicator lights		Diagnostic and status light standard		
Power source		Power supply on board the I/O base		
Agency approvals		UL, CE, CSA, FM Class I, Div. II		UL, CE, CSA

References

170INT11000 / 11003

170INT12000

Modules

Description	Media	Generation	Reference	Weight kg
INTERBUS communication adapters	Twisted Pair	SUPI 2	**170INT11000**	0.070
		SUPI 3	**170INT11003**	0 070
	Fiber Optic	SUPI 3	**170INT12000**	0 070

Accessories

Description	Length	Reference	Weight kg
Branch INTERface, Twisted Pair, SUPI 3	–	**170BNO67101**	–
INTERBUS Connector Kit, sockets/pins, 9-pin with male and female connectors for remote bus cable	–	**170XTS00900**	–
INTERBUS Cable (with small connectors)	11 cm (0 36 ft)	**170MCI00700**	–
INTERBUS Cable low-profile connector	100 cm (3 3 ft.)	**170MCI10001**	–
INTERBUS cables	100 m (330 ft.)	**TSXIBSCA100**	–
	400 m (1312 ft)	**TSXIBSCA400**	–
	By the meter	**KAB3225LI**	–
Momentum front label replacement (set of 10)	–	**170XCP10000**	–
INTERBUS User Guide	–	See page 97	

Modicon Momentum automation platform

Profibus DP communication adapter

Presentation

The Model **170DNT11000** Profibus DP Communication Adapter for the Momentum I/O product line provides a direct connection to the Profibus DP Communication Network for the full family of Momentum I/O modules. This connectivity enables the Momentum I/O to be used in open architecture control systems with other Profibus DP compatible control products, including programmable controllers, industrial computers, operator control stations, drive systems, and other controls, to provide a flexible, cost-effective solution for distributing I/O modules throughout a large area.

The Profibus DP communication adapter is a single package that is designed to plug on to any of the Momentum Input/Output modules base, thus allowing the I/O module full access to the Profibus DP Communication Network. Each Momentum I/O module is an individual node on the network, with its address user-selected on the dual rotary switch on the front of the communication adapter. The figure below illustrates a typical control system using Momentum I/O modules on the Profibus DP network with programmable controllers and industrial computer systems.

The Profibus Configuration File is required for the configuration of the Momentum I/O Modules on the Profibus DP network. This file contains the Profibus PNO Identnumber for all of the Momentum I/O modules, and is available at no charge to all users as a download over the Internet from the Schneider Electric web page.

Network Topology

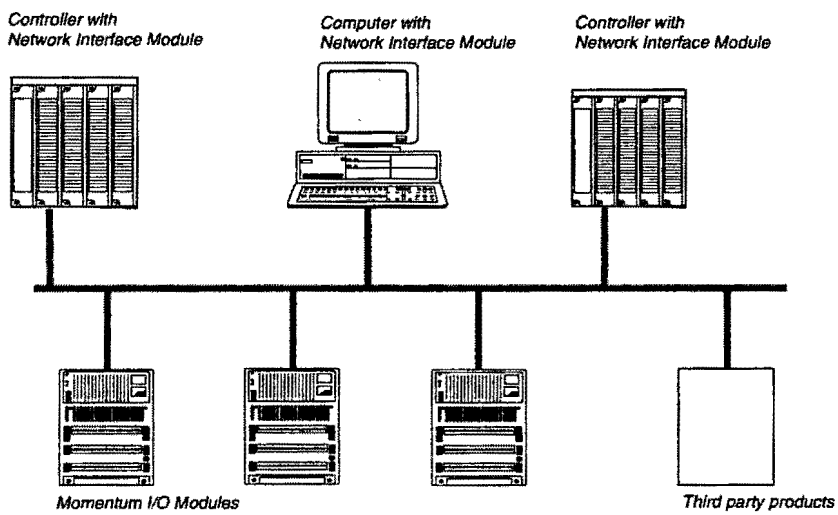

Description

The **170DNT11000** Profibus DP Communication Adapter comprises on the front panel:

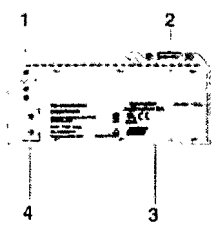

1 LED Status Indicators comprising: BF (green), bus fault.
2 A 9-Pin SUB-D connector for connection to the Profibus DP Network.
3 Area for Label (label shipped with I/O base).
4 Rotary switches for slave addresses.

Modicon Momentum automation platform

Profibus DP communication adapter

Characteristics

Model No.		170DNT11000
Communication bus		Profibus DP
Communication rate		9 6 K bit/s...12 M bit/s
Number of nodes (devices)		Up to 126 devices (32 without repeater)
Media		Twisted Pair
Distance	**m (ft.)**	Up to 1 200 (4 000)
Connectors		9 Pin "D" connectors
Error checking		CRC-16 error check
Error and fail states		Fail safe
Addressing		Switch selectable
Mode of operation		Master-Slave
Topology		Multi-Drop, Ring
Packaging		Standard Momentum communications adapter enclosure - IP20 environment
Indicator lights		Diagnostic and status light standard
Power source		Power supply on-board the I/O base
Agency approvals		UL, CE, CSA

References

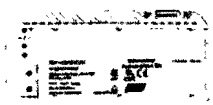

170DNT11000

Module

Description	Reference	Weight kg
Profibus DP Communication Adapter	**170DNT11000**	0.070

Accessories

Description	Length	Reference	Weight kg
Device Master File	–	*(1)*	–
Profibus DP cable	100 m (328 ft)	**TSXPBSCA100**	–
	400 m (1312 ft)	**TSXPBSCA400**	–
	By the meter	**KABPROFIB**	–
Profibus DP connector with Terminator	–	**490NAD91103**	–
Profibus DP in-Line Connector	–	**490NAD91104**	–
Profibus DP connector with Programming Port	–	**490NAD91105**	–
Momentum front label replacement (set of 10)	–	**170XTS10000**	–
Profibus DP User Guide		See page 97	–

(1) The Profibus device Master File (381SWA00000) is supplied with the User Guide **870USE0040•**, *or can be downloaded from the Telemecanique website at* www.telemecanique.com.

Modicon Momentum automation platform

DeviceNet communication adapter

Presentation

The Model **170LNT71000** DeviceNet Communication Adapter for the Momentum I/O product line provides a direct connection to the DeviceNet Communication Network for the full family of Momentum I/O modules. This connectivity enables the Momentum I/O to be used in open architecture control systems with other DeviceNet compatible control products, including programmable controllers, industrial computers, operator control stations, drive systems, and other controls, to provide a flexible, cost-effective solution for distributing I/O modules throughout a large area.

The DeviceNet communication adapter is a single package that is designed to plug on to any of the Momentum Input/Output module bases, thus allowing the I/O module full access to the DeviceNet Communication Network. Each Momentum I/O module is an individual node on the network with its address user-selected on the dual rotary switch on the front of the communication adapter.

The adapter complies with the Open DeviceNet Vendor Association (ODVA) specification Release 2.0 for network communication protocol and data transfer. Current information about the ODVA specification can be obtained at the ODVA Web site: http://www.odva.org.

Electronic Data Sheet Disk
An Electronic Data Sheet (EDC) disk is included with the DeviceNet Adapter's user guide (reference **870USE10400**). It supplies the application software parameters for setup of each I/O base. Each file's format on the disk complies with the ODVA specification for DeviceNet I/O module EDS parameters. Updated EDS files are available for downloading from the Customer Support areas of the Schneider Automation Web Site and Bulletin Board service.

Description

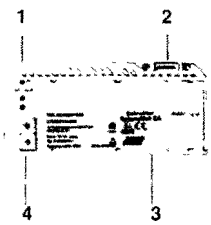

The **170LNT71000** DeviceNet Communication Adapter comprises on the front panel:

1 LED status indicators comprising:
- PWR (green), power is present from I/O base
- MNS (green/red), adapter is communicating on network
- IO (green/red), I/O is active, no faults.

2 DeviceNet connector.
3 Area for label (label shipped with I/O base).
4 Rotary switches for slave addresses.

Modicon Momentum automation platform

DeviceNet communication adapter

Characteristics

Model No.		170LNT71000
ODVA compliance		With ODVA Specification Release 2 0
Communication rates	K bit/s	Supports 125/250/500 standard DeviceNet baud rates
Network power loading		Operational from 1 to 25 VDC, 110 mA maximum, 75 mA typical
Number of nodes		Up to 64 nodes
Media		Twisted Pair
Distance	m (ft.)	Up to 500 (1640), depending on communication rate
Connectors		5-pin male connector with 5 mm pin-to-pin spacing
Error checking		CRC-16 error check
Error and fail states		Fail safe
Addressing		Switch selectable
Mode of operation		CSMA/CA, master-slave, peer-to-peer
Topology		Multi-Drop Trunk
Packaging		Standard Momentum communication adapter enclosure - IP 20 environment
Indicator lights		Diagnostic and status light standard
Power source		Power supply on board the I/O base
Agency approvals		UL, CE, CSA, FM Class I, Div. II

References

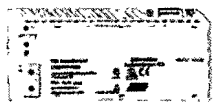

170LNT71000

Module

Description	Reference	Weight kg
DeviceNet Communication Adapter	170LNT71000	0.070

Accessories

Description	Quantity	Reference	Weight kg
DeviceNet connector	–	170XTS06000	–
Momentum front label replacement	Set of 10	170XTS10000	–
DeviceNet communication adapter User Guide	Includes the EDS configuration software	See page 97	–

Modicon Momentum automation platform

M1/M1E processor adapters

Type	M1 processor adapters			
	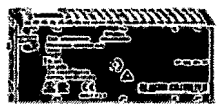	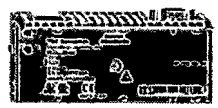	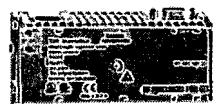	
RAM memory	64 K bit			256 K bit
Flash memory	256 K bit			
984 LL program memory	2.4 K bit			12 K bit
IEC program memory	–			160 K bit
Data memory	2 K bit			4 K bit
Scan time	1 ms/K	0.63 ms/K	1 ms/K	0.63 ms/K
Clock speed	20 MHz	32 MHz	20 MHz	32 MHz
I/O points	2048			4096
I/O drops	Up to 2048 I/O points with Modbus Plus option adapter			80 with ProWORX 128 with Concept
Power source	Power supply on-board the I/O bases			
Communication ports	1 RS 232 Modbus		1 RS 232 Modbus 1 RS 485 Modbus	1 RS 232 Modbus 1 I/O bus
IEC executive				Compatible
Type of module	171CCS70000	171CCS70010	171CCS78000	171CCS78000
Pages	66			

M1 processor adapters		M1E processor adapters			
512 K bit		544 K bit			
512 K bit		512 K bit	1 M bit	512 K bit	1 M bit
18 K bit					
240 K bit		–	200 K bit	–	200 K bit
24 K bit					
1 ms/K		0.3 ms/K			
32 MHz		50 MHz			
8192					
Up to 2048 I/O points with Modbus Plus option adapter	80 with ProWORX 128 with Concept	Up to 2048 I/O points with Modbus Plus option adapter		80 with ProWORX 128 with Concept	
Power supply on-board the I/O bases					
1 RS 232 Modbus 1 RS 485 Modbus	1 RS 232 Modbus 1 I/O bus	1 Ethernet (Transparent Ready class B10) 1 RS 485 Modbus		1 Ethernet (Transparent Ready class B10) 1 I/O bus	
Compatible		–	Supplied	–	Supplied
				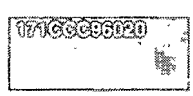	
67		68	69	68	69

Modicon Momentum automation platform
M1/M1E processor adapters

Presentation

The Momentum M1/M1E processor adapters are based on the Modicon 984 family of products. You can mount these Adapters on Momentum I/O Bases to provide intelligence to the I/O. The processor adapter can quickly and independently solve logic, control its own local I/O (discrete or analog), and communicate to other control entities through one of a number of Momentum communication options. The processor adapter can turn an ordinary I/O Base into a PID controller or high-speed logic solver.

You can create your own controller from a number of different bases, and with other Momentum options, network your local logic solvers together into an intelligent subsystem as part of a larger Modicon application, or into a standalone, integrally networked system with local controllers with extended I/O. A controller can be added to the different bases and combined with other Momentum options, which can then be networked together in an intelligent subsystem as part of a larger Modicon application. The Momentum I/O Base can be made a standalone, integrally networked system using local controllers with extended I/O.

The Momentum M1/M1E processor adapters are meant to stand alone, be mounted on a single Momentum I/O Base (with its own extended Momentum I/O connected to the I/O Bus Port on 171CCS76000 processor adapter), or be mounted together with one of a variety of Momentum Option Adapters, providing different network capabilities, a time-of-day clock, and a battery back-up system. The built-in flash memory is used to store the executive, allowing for convenient field upgrades of the operating system. The flash memory can also be used to back up your applications, creating a local copy of your program to be loaded back into RAM, thus providing original program file integrity. On 171CCS78000 processor adapter, the RS 485 port can be used to connect to dedicated devices such as an operator interface panel or a marquee, or used in a master/slave RS 485 network to connect to multiple devices.

The processor adapters can be programmed with Modsoft version 2.5 or greater, Concept version 2.1 or greater, ProWORX NxT version 2.0 or greater or ProWORX 32.

The following table describes the characteristics of the Momentum M1/M1E processor adapters.

Characteristics

Processor Adapter	RAM Memory	Flash Memory	Scan Time	Modbus Port	I/O Bus Port	IEC Executive
171CCS70000	64 K	256 K	1 ms/K	1 x RS 232C	–	–
171CCS70010	64 K	256 K	0.63 ms/K	1 x RS 232C	–	–
171CCS76000	256 K	256 K	0.63 ms/K	1 x RS 232C	1 x I/O Bus	Compatible
171CCS78000	64 K	256 K	1 ms/K	1 x RS 232C 1 x RS 485	–	–
171CCC76010	512 K	512 K	1 ms/K	1 x RS 232C	1 x I/O Bus	Compatible
171CCC78010	512 K	512 K	1 ms/K	1 x RS 232C 1 x RS 485	–	Compatible
171CCC96020	544 K	512 K	.3 ms/K	1 x Ethernet	1 x I/O Bus	–
171CCC96030	544 K	1 Mb	.3 ms/K	1 x Ethernet	1 x I/O Bus	Supplied
171CCC98020	544 K	512 K	.3 ms/K	1 x RS 485 1 x Ethernet	–	–
171CCC98030	544 K	1 Mb	.3 ms/K	1 x RS 485 1 x Ethernet	–	Supplied

Programming Software for Momentum

Momentum processor adapters have a number of PC programming software options available. You can program your processor Adapter via the Modbus RS 232 serial port, or with an M1E processor via Ethernet network.

If using a Modbus Plus Option Adapter in conjunction with a Processor Adapter, you can program via an SA85 card installed in a PC and connected to the same Modbus Plus network.

For more specific information, see the appropriate Momentum, ProWORX or Concept programming software literature and documentation.

Characteristics: pages 66 to 69
References: page 70

Modicon Momentum automation platform

M1/M1E processor adapters

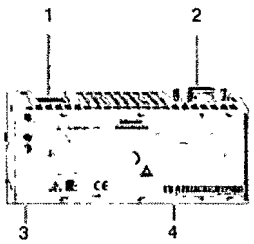

Description

A typical Momentum M1/M1E Processor Adapter consists of the following components:

1 Modbus or Ethernet Port connector.
2 Optional second port (Modbus or I/O bus).
3 LED indicators.
4 Fill-in Label.

Mounting

A typical system, showing a model 171CCS76000 Momentum M1 processor adapter mounted on top of a Momentum I/O Base. The processor adapter controls the I/O it is mounted on, the local I/O, and can control externally configured I/O. You can also use a Modbus Plus Option Adapter with the processor adapter to extend the system's I/O capacity.

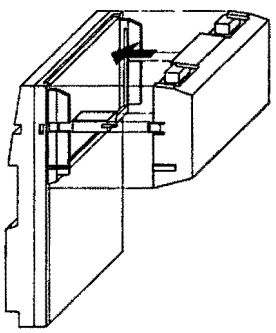

Characteristics pages 66 to 69
References: page 70

Modicon Momentum automation platform

M1/M1E processor adapters

Environment

Type of processor			171CCS70000	171CCS70010	171CCS78000	171CCS76000
Temperature	Operating	°C	0 to 60			
	Storage	°C	- 40 to 85			
Relative humidity			5 to 96% (non-condensing)			
Altitude		m	2000 (6,500 ft)			
Mechanical withstand (immunity)	To vibrations		57 to 150 Hz @ 1 gn 10 to 57 Hz @ 0.075 mm d.a			
	To shocks		± 15 gn peak, 11 ms, half sine wave			
Designed to meet			UL, e, CUL, FM Class 1 Div. 2, NEMA 250 Type 1, and IP 20 conforming to IEC529			

Characteristics

Central processing unit (CPU)			x 86 based			
Word length		bit	16			
Material			Lexan			
Voltage		VDC	5.0 V (supplied by I/O Base)			
Voltage tolerance			± 5% (as supplied by I/O Base)			
RFI immunity/EMI susceptibility/Electrostatic discharge			Meets e mark for open equipment. Open equipment should be installed in an industry standard enclosure, with access restricted to qualified service personnel			
Di-electric strength			RS 232 is non-isolated from logic common			
Indicator lights			Run and communication active			
Power source			Power supply on-board the Momentum I/O Base			
Clock speed		MHz	20	32	20	32
Scan time		ms/K	1	0 63	1	0.63
Communication ports	1		Dedicated RS 232C Modbus			
	2		N/A		Dedicated RS 485 Modbus	I/O Bus (derivative of INTERBUS
Capacity	984 LL program memory	K	2.4			12
	IEC program memory	K	–			160
	Data memory	K	2			4
	Discrete I/O		2048 In/2048 Out (A total of 2048 words can be configured for discrete analog I/O, any mix up to the stated limits.)			2048 In/2048 Out
	Register I/O		2048 In/2048 Out (A total of 2048 words can be configured for discrete and analog I/O, any mix up to the stated limits.)			4096 words total
	I/O limit		–		- I/O local on Modbus - I/O can be extended using a Modbus Plus option Adapter and Peer Cop (2048 In/Out)	8192 bits max.. - 4096 In/4096 Out on I/O Bus - I/O can be extended using a Modbus Plus option Adapter and Peer Cop (2048 In/Out)
I/O bus addressing			–			80 I/O drops with ProWORX 128 I/O drops with Concept

References:
page 70

Environment

Type of processor			171CCC76010	171CCC78010
Temperature	Operating	°C	0 to 60	
	Storage	°C	- 40 to 85	
Relative humidity			5 to 96% (non-condensing)	
Altitude		m	2000 (6,500 ft)	
Mechanical withstand (immunity)	To vibrations		57 to 150 Hz @ 1 gn 10 to 57 Hz @ 0.075 mm d.a	
	To shocks		± 15 gn peak, 11 ms, half sine wave	
Designed to meet			UL, e, CUL, FM Class 1 Div. 2, NEMA 250 Type 1, and IP 20 conforming to IEC52	

Characteristics

Central processing unit (CPU)			x 86 based	
Word length		bit	16	
Material			Lexan	
Voltage		VDC	5.0 V (supplied by I/O Base)	
Voltage tolerance			± 5% (as supplied by I/O Base)	
RFI immunity/EMI susceptibility/Electrostatic discharge			Meets e mark for open equipment. Open equipment should be installed in an industry standard enclosure, with access restricted to qualified service personnel	
Di-electric strength			RS 232 is non-isolated from logic common	
Indicator lights			Run and communication active	
Power source			Power supply on-board the Momentum I/O Base	
Clock speed		MHz	32	
Scan time		ms/K	1	
Communication ports	1		Dedicated RS 232C Modbus	
	2		I/O Bus (derivative of INTERBUS)	Dedicated RS 485 Modbus
Capacity	984 LL program memory	K	18	
	IEC program memory	K	240	
	Data memory	K	24	
	Discrete I/O		8192 In/8192 Out (A total of 8192 bits can be configured for discrete and analog I/O, any mix up to the stated limits)	
	Register I/O		26048 In/26048 Out (A total of 26048 words can be configured for discrete and analog I/O, any mix up to the stated limits)	
	I/O limit		8192 bits max.: - 4096 In/4096 Out on I/O Bus - I/O can be extended using a Modbus Plus option Adapter and Peer Cop (2048 In/Out)	- I/O local on Modbus - I/O can be extended using a Modbus Plus option Adapter and Peer Cop (2048 In/Out)
I/O bus addressing			80 I/O drops with ProWORX 128 I/O drops with Concept	–

References:
page 70

Modicon Momentum automation platform

M1/M1E processor adapters

Environment

Type of processor			171CCC96020	171CCC98020
Temperature	Operating	°C	0 to 60	
	Storage	°C	- 40 to 85	
Relative humidity			5 to 96% (non-condensing)	
Altitude		m	2000 (6,500 ft)	
Mechanical withstand (immunity)	To vibrations		57 to 150 Hz @ 1 gn 10 to 57 Hz @ 0.075 mm d.a	
	To shocks		± 15 gn peak, 11 ms, half sine wave	
Designed to meet			UL, e, CUL, FM Class 1 Div. 2, NEMA 250 Type 1, and IP 20 conforming to IEC52	

Characteristics

Central processing unit (CPU)			x 86 based	
Word length		bit	16	
Material			Lexan	
Voltage		VDC	5.0 V (supplied by I/O Base)	
Voltage tolerance			± 5% (as supplied by I/O Base)	
RFI immunity/EMI susceptibility/Electrostatic discharge			Meets e mark for open equipment. Open equipment should be installed in an industry standard enclosure, with access restricted to qualified service personnel	
Di-electric strength			Communication port is non-isolated from logic common	
Indicator lights			RUN, Ethernet LAN active and LAN status	
Power source			Power supply on-board the Momentum I/O Base	
Flash memory		K	512	
Clock speed		MHz	50	
Scan time		ms/K	3	
Communication ports	1		Ethernet	
	2		I/O Bus (derivative of InterBus)	Dedicated RS 485 Modbus
Capacity	984 LL program memory	K	18	
	IEC program memory	K	–	
	Data memory	K	24	
	Discrete I/O		8192 In/8192 Out (A total of 8192 bits can be configured for discrete and analog I/O, any mix up to the stated limits)	
	Register I/O		26048 In/26048 Out (A total of 26048 words can be configured for discrete and analog I/O, any mix up to the stated limits)	
	I/O limit		8192 bits max. - 4096 In/4096 Out on I/O Bus - I/O can be extended using a Modbus Plus option Adapter and Peer Cop (2048 In/Out)	- I/O local on Modbus - I/O can be extended using a Modbus Plus option Adapter and Peer Cop (2048 In/Out)
Transparent Ready services	Class		B10	
	Web services		"Rack Viewer" access to the product description and status, and to the island diagnostics "Data editor" access to the configuration functions and variables "Web page loader" software tool for loading user Web pages	
	Ethernet TCP/IP communication management services		Modbus Messaging (read/write data words) I/O Scanning	
I/O bus addressing			80 I/O drops with ProWORX 128 I/O drops with Concept	–

References:
page 70

Modicon Momentum automation platform
M1/M1E processor adapters

Environment

Type of processor			171CCC96030	171CCC98030
Temperature	Operating	°C	0 to 60	
	Storage	°C	- 40 to 85	
Relative humidity			5 to 96% (non-condensing)	
Altitude		m	2000 (6,500 ft.)	
Mechanical withstand (immunity)	To vibrations		57 to 150 Hz @ 1 gn 10 to 57 Hz @ 0.075 mm d.a	
	To shocks		± 15 gn peak, 11 ms, half sine wave	
Designed to meet			UL, e, CUL, FM Class 1 Div 2, NEMA 250 Type 1, and IP 20 conforming to IEC52	

Characteristics

Central processing unit (CPU)			x 86 based IEC Executive	
Word length		bit	16	
Material			Lexan	
Voltage		VDC	5 0 V (supplied by I/O Base)	
Voltage tolerance			± 5% (as supplied by I/O Base)	
RFI immunity/EMI susceptibility/Electrostatic discharge			Meets e mark for open equipment. Open equipment should be installed in an industry standard enclosure, with access restricted to qualified service personnel	
Di-electric strength			RUN, Ethernet LAN active and LAN status	
Indicator lights			Diagnostic and status lights, standard	
Power source			Power supply on-board the Momentum I/O Base	
Flash memory		Mb	1	
Clock speed		MHz	50	
Scan time		ms/K	3	
Communication ports	1		Ethernet	
	2		I/O Bus (derivative of InterBus)	Dedicated RS 485 Modbus
Capacity	984 LL program memory	K	18	
	IEC program memory	K	200	
	Data memory	K	24	
	Discrete I/O		8192 In/8192 Out (A total of 8192 bits can be configured for discrete and analog I/O, any mix up to the stated limits)	
	Register I/O		26048 In/26048 Out (A total of 26048 words can be configured for discrete and analog I/O, any mix up to the stated limits)	
	I/O limit		8192 bits max. - 4096 In/4096 Out on I/O Bus - I/O can be extended using a Modbus Plus option Adapter and Peer Cop (2048 In/Out)	- I/O local on Modbus - I/O can be extended using a Modbus Plus option Adapter and Peer Cop (2048 In/Out)
Transparent Ready services	Class		B10	
	Web services		"Rack Viewer" access to the product description and status, and to the island diagnostics "Data editor" access to the configuration functions and variables "Web page loader" software tool for loading user Web pages	
	Ethernet TCP/IP communication management services		Modbus Messaging (read/write data words) I/O Scanning	
I/O bus addressing			80 I/O drops with ProWORX 128 I/O drops with Concept	–

References:
page 70

Modicon Momentum automation platform

M1/M1E processor adapters

171CCS7●0●0

171CCC7●010

171CCC9●020 / 30

M1/M1E processor adapters

RAM Memory	Communication Port(s)	Clock Speed	Reference	Weight kg (oz.)
64 K	1 Modbus	20 MHz	171CCS70000	0.042(1.5)
	1 Modbus	32 MHz	171CCS70010	0.042(1.5)
	2 Modbus	20 MHz	171CCS78000	0.042(1.5)
256 K	1 Modbus, 1 I/O Bus	32 MHz	171CCS76000	0 042(1.5)
512 K	1 Modbus, 1 I/O Bus	32 MHz	171CCC76010	0.042(1.5)
	2 Modbus	32 MHz	171CCC78010	0.042(1 5)
544 K (1)	1 Modbus, 1 Ethernet	50 MHz	171CCC98020	0 042(1.5)
	1 Ethernet, 1 I/O Bus	50 MHz	171CCC96020	0.042(1 5)
544 K, IEC Exec (1)	1 Modbus, 1 Ethernet	50 MHz	171CCC98030	0.042(1.5)
	1 Ethernet, 1 I/O Bus	50 MHz	171CCC96030	0 042(1.5)

Connection accessories and documentation

Description	Type	Sold in lot of	Reference	Weight kg (oz.)
RS 232 communication cable RJ45 to RJ45	1 m (3 ft.)	–	110XCA28201	–
	3 m (10 ft.)	–	110XCA28202	–
	6 m (20 ft)	–	110XCA28203	–
RS 485 cable connector T for RJ45	–	–	170XTS04000	–
RS 485 terminating (RJ45 resistor plugs)	–	2	170XTS02100	–
D-shell adapters	RJ45 to 9-pin (for AT serial port)	–	110XCA20300	–
	RJ45 to 25-pin (for XT serial port)	–	110XCA20400	–
Ground clamp	–	–	424244739	–
ConneXium cabling system	Ethernet cabling for M1E processor adapters	–	See page 78	–
Concept software	–	–	See page 88	–
ProWORX software	–	–	See page 93	–
Processor adapters user guide	–	–	See page 97	–

(1) Transparent Ready Class B10 (embedded standard Web server - standard Ethernet TCP/IP communication services). For more details, consult our catalog "Transparent Ready, Ethernet TCP/IP and Web technologies".

Presentation: page 64 | Description. page 65 | Characteristics. pages 66 to 69

Modicon Momentum automation platform

M1 processor adapters

Power supply

An optional power supply, the **170CPS11100**, is available for the Momentum product family. Normally, power for controller, option, and communication modules is obtained from the power supply built into the I/O bases modules. However, the **170CPS11100** provides a power solution for applications requiring conversion from 230 or 120 VAC to 24 VDC. The supply mounts alongside the other Momentum components on the DIN rail. The jumper-selectable, 230/120 VAC, power is input to the power supply with the use of a spring- or screw-type terminal strip; the 24 VDC power is output to the system in the same manner.

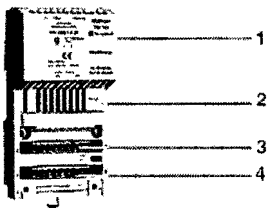

Description

A power supply consists of the following components:

1 Fill-in identifying label.
2 LED status display.
3 Input voltage (AC) terminal strip connector mounting slot.
4 Output voltage (DC) terminal strip connector mounting slot.

Characteristics

Model			170CPS11100
Input voltage		**VAC**	120 or 230 (jumper selectable)
Output voltage		**VDC**	24
Maximum output		**A**	0.7
External fuses	120 VAC input voltage	**A**	0.63, time lag
	230 VAC input voltage	**A**	0.315, time lag

References

170CPS11100

Designation	Description	Reference	Weight kg (oz.)
Power supply	120 VAC or 230 VAC	**170CPS11100**	0.284 (10)
Terminal strips (set of 3)	With spring terminals	**170XTS01200**	–
	With screw terminals	**170XTS01100**	–

Modicon Momentum automation platform
Option adapters

Configuration	Modbus Plus option adapters	
Communication network	Modbus Plus	
Communication port(s)	1 Modbus Plus	2 redundant Modbus Plus
Communication port connector	9-pin D-shell	
Time-of-day clock	On-board, ± 13 sec./day accuracy	
Back-up battery	User-replaceable 2/3 AA Lithium	
Voltage	5 VDC supplied by I/O base	
Operating temperature	0 to 60°C	
Humidity	5 to 95%, relative non condensing	
Shock	± 15 g peak, 11 ms, half-sine wave	
Vibration	10 to 57 Hz @ 0,075 mm d.a.	
Type of module	172PNN21022	172PNN26022
Page	76	

Serial option adapter

General-purpose serial communications

1 software-selectable RS 232/RS 485 serial port

9-pin D-shell

On-board, ± 13 sec./day accuracy

User-replaceable 2/3 AA Lithium

5 VDC supplied by I/O base

0 to 60°C

5 to 95%, relative non condensing

± 15 g peak, 11 ms, half-sine wave

10 to 57 Hz @ 0,075 mm d.a.

TSXJNN21092

76

Modicon Momentum automation platform
Option adapters

Presentation

The Momentum option adapters, mounted on Momentum I/O bases, can be used to enhance the capabilities of the Momentum processor adapters that mount on top of the option adapter, to fulfill a variety of roles. The option adapters allow you to network your local logic solvers together into an intelligent subsystem as part of a larger Schneider Electric application, or into a standalone, integrally networked system with local controllers with extended I/O.

The Momentum option adapters are:
- **172PNN21022** - one Modbus Plus communication port,
- **172PNN26022** - two redundant Modbus Plus communication ports,
- **172JNN21032** - one general-purpose serial communication port, RS 232 or RS 485 selectable.

Each of these option adapters provides an on-board, TOD *(Time-Of-Day)* clock that is available to the application residing in the processor adapter. The clock is useful for the scheduling of events, time-stamping operations and operator interface requirements. In addition, each option adapter contains a battery-backup system that maintains the application and its variables in the event of a power outage to the processor adapter. The option adapter's convenient side-door access allows for quick replacement of the single 2/3 AA Lithium battery.

In addition to the TOD clock and battery backup features, the **172PNN21022** adapter allows you to add networking to the intelligent I/O base. Model **172PNN26022** allows you to add redundantly-cabled networking to the I/O base. This opens the Momentum product line to a broad spectrum of applications. You can use the port to connect to other processors, such as:
- Other Momentum processor/option adapters
- Other PLCs enabled with Modbus Plus
- Momentum Modbus Plus communication adapters and I/O bases
- Other third party devices using Modbus Plus to communicate.

Model **172JNN21032** allows you to add a second, defacto-industry standard Modbus port (selectable RS 232/485) to the I/O base. You can use the port to connect to other processors, such as other Momentum processor/option adapters, and other devices, such as operator interface panels and display marquees.

Programming software for Momentum

Momentum processor adapters have a number of PC programming software options available. You can program your processor adapter via the Modbus RS 232 serial port, or if using a Modbus Plus option adapter in conjunction with a processor adapter, via an SA85 card installed in a PC and connected to the same Modbus Plus network. For more specific information, see the appropriate Momentum, ProWORX, and Concept programming software documentation.

Modicon Momentum automation platform

Option adapters

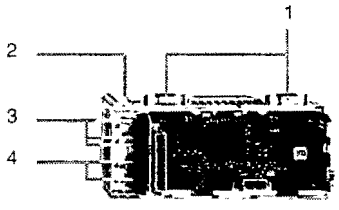

Description

A typical Momentum option adapter consists of the following components:

1 9-pin D-shell connector(s) for Modbus Plus communications.
2 Battery compartment.
3 LED indicators.
4 Address switches for Modbus Plus.

Mounting

The Momentum option adapters provide the processor adapters with additional networking capabilities, a time-of-day clock, and a battery back-up. The option adapters also snap onto the I/O base; in this figure, the processor adapter stacks on top. Here, the option adapter is used in conjunction with the processor adapter to extend the system's I/O capacity.

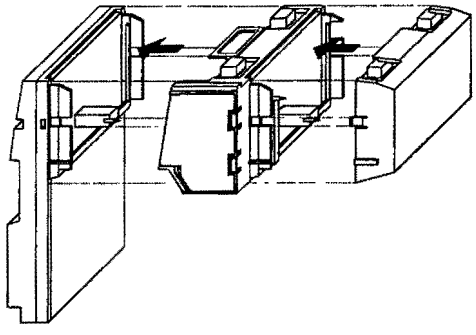

Modicon Momentum automation platform
Option adapters

Characteristics

Model No			172PNN21022	172PNN26022	172JNN21032
Time-of-day clock			On-board, ± 13 s/day accuracy		
Battery	Type		User-replaceable 2/3 AA Lithium		
	Service life		< 30 days from the time a battery-low indication is received, to actual battery failure @ 40 °C maximum service life ambient temperature with the system continuously powered down		
	Shelf life		In excess of 5 years at room temperature		
Communication port(s)			One Modbus Plus port Drop address range 1 to 64	Two redundant Modbus Plus ports	General-purpose serial port RS 232 or RS 485 selectable
Communication port connector(s)			9-pin D-shell		
Operating temperature		°C	0 to 60		
Storage temperature		°C	- 40 to 85		
Relative humidity			5 to 95% (non-condensing)		
Attitude		m (ft.)	2000 (6 562)		
Shock			± 15 gn peak, 11ms, half sine wave		
Vibration		Hz	57 to 150 @ 1 gn 10 to 57 @ 0.075 mm d.a.		
Height		in (mm)	1.01 (25.) [2.10 (58 3) on battery side]		
Width		in (mm)	5.57 (143.1)		
Depth		in (mm)	2.36 (60 06)		
Weight		oz. (g)	3.00 (85.05)		
Material			Lexan		
Voltage		VDC	5.0 (supplied by I/O base)		
Voltage tolerance			± 5% (as supplied by I/O base)		
RFI immunity/EMI susceptibility/Electrostatic discharge			Meets CE mark for open equipment. Open equipment should be installed in an industry standard enclosure, with access restricted to qualified service personnel		
Di-electric strength		VDC	500		
Designed to meet			UL, CE, CSA, NEMA 250 Type 1, and IP 20 conforming to IE 529		UL, CSA, NEMA 250 Type 1, and IP 20 conforming to IE 529, FM Class I, Div. II
Packaging			Standard Momentum option adaptor		
Indicator lights			Communication active light		
Power source			Power supply on-board the Momentum I/O base		

Modicon Momentum automation platform
Option adapters

172PNN21022

172PNN26022

172JNN21032

Option adapter modules

Description	Reference	Weight kg (oz.)
Modbus Plus option adapter, Single Port	**172PNN21022**	0 070 (2.5)
Modbus Plus option adapter, dual redundant ports	**172PNN26022**	0 070 (2 5)
Serial option adapter, single serial port	**172JNN21032**	0.070 (2.5)

Accessories

Description	Use		Length	Reference	Weight kg
	From	To			
Standard Modbus Plus cables	T-junction box	T-junction box	30 m (100 ft.)	**490NAA27101**	–
			150 m (100 ft)	**490NAA27102**	–
			300 m (100 ft.)	**490NAA27103**	–
			450 m (1500 ft.)	**490NAA27104**	–
			1500 m (5000 ft.)	**490NAA27106**	–
Modbus Plus Drop cables	Communication modules for Momentum I/O bases	T-junction box	2.4 m (8 ft.)	**900NAD21110**	0.530
			6 m (20 ft)	**990NAD21130**	0.530
Modbus Plus RS 485 cables	–	–	25 m (10 0 in)	**170MCI02010**	–
			1 m (3 ft.)	**170MCI02036**	–
RS 485 master communication cable (RJ45/RJ45)	–	–	0 3 m (1 ft)	**170MCI04110**	–
Modbus Plus RJ45 cable	–	–	3 m (10 ft)	**170MCI02120**	–
Modbus Plus RJ45 cables double-ended	–	–	3 m (10 ft.)	**170MCI02180**	–
			10 m (30 ft.)	**170MCI02080**	–
RS 232 communication cables (RJ45/RJ45)	–	–	1 m (3 ft.)	**110XCA28201**	–
			3 m (10 ft)	**110XCA28202**	–
			6 m (20 ft)	**110XCA28203**	–

Description	Use	Reference	Weight kg
Modbus Plus taps	IP 20 junction box for tap-off connection (T), integrate the terminator. Requires the wiring tools 043 509 383	**990NAD23000**	0.230
	IP 65 junction box for tap-off connection (T), supports 1 RJ45 connector on front panel for terminal	**990NAD23010**	–
Modbus Plus line connector (9-Pin Sub-D)	Communication module connection	**ASMBKT085**	–
Modbus Plus line terminators (sold in lot of 2)	2 impedance adapters for box (IP 20) 990 NAD 230 00 (replacement part)	**ASMBKT185**	–
	2 impedance adapters for box (IP 65) 990 NAD 230 10	**990NAD23011**	–
D-shell adapters	RJ45 to 9-pin (for AT serial port)	**110XCA20300**	–
	RJ45 to 25-pin (for XT serial port)	**110XCA20400**	–

Description	Sold in lots of	Reference	Weight kg (oz.)
RS 485 (9-Pin Sub-D) **cable connector T for RJ45**	–	**170XTS04000**	–
RJ45 shielded connectors	25	**170XTS02200**	–
Modbus Plus terminating RJ45 resistor plugs	2	**170XTS02100**	–
RS 485 (RJ45) **cable connector T for RJ45**	–	**170XTS04100**	–
RS 485 Multi-Master RJ45 shunt plugs	2	**170XTS04200**	–
Modbus Plus (9-Pin Sub-D) **cable connector T for RJ45**	–	**170XTS02000**	–
Ground clamp	–	**424244739**	–
Wiring tool Mounting trunk and tap wires on the IP20 junction box 990 NAD 230 00	–	**043509383**	–

Modicon Momentum automation platform

Cabling system
ConneXium hubs

Presentation

Hubs are used for transmitting signals between several media (ports). Hubs are "plug and play" devices that do not need any configuration.
The use of hubs makes it possible to create the following topologies:
- Star topology using hubs.
- Tree topology using hubs.

For more details, consult our catalog "Transparent Ready, Ethernet TCP/IP and Web technologies".

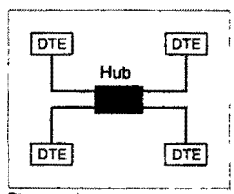

Star topology

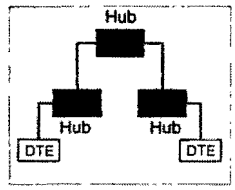

Tree topology

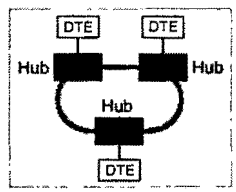

Ring topology
(with 499NOH10510)

Characteristics and references

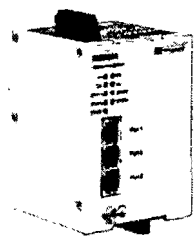

Hubs					
Interfaces	Copper cable ports	Number and type	4 x 10BASE-T ports	4 x 100BASE-TX ports	3 x 10BASE-T ports
		Shielded connectors	RJ45		
		Medium	Shielded twisted pair		
		Line length	100 m		
	Optical fiber ports	Number and type	–		2 x 10BASE-FL ports
		Connectors	–		ST (BFOC)
		Medium	–		Multi mode optical fiber
		Line length			
		50/125 µm fiber	–		2300 m (7.546 ft.) *(1)*
		62.2/125 µm fiber	–		3100 m (10 170 ft.) *(1)*
		Optical budget			
		50/125 µm fiber	–		10 dB
		62.2/125 µm fiber	–		13 dB
Topology	Number of cascaded hubs (copper)		4 max.	2 max.	4 max.
	Number of hubs in a ring (fiber)		–		11 max
Redundancy			P1 and P2 redundant power supplies		P1 and P2 redundant power supplies, redundant optical ring
Power supply	Voltage		⎓ 24 V (18 to 32 V), safety extra low voltage (SELV)		
	Power consumption		80 mA (130 max. at ⎓ 24 V)	210 mA (270 max. at ⎓ 24 V)	160 mA (350 max. at ⎓ 24 V)
	Removable terminal		5-pin		
Operating temperature			0 to + 60 °C (32 to 140 °F)		
Relative humidity			10 to 95% non condensing		
Degree of protection			IP 30	IP 20	IP 30
Dimensions W x H x D		mm (in)	40 x 125 x 80 (1.57 x 4.92 x 3.14)	47 x 135 x 111 (3.15 x 5.51 x 3.35)	80 x 140 x 85 (1.85 x 5 31 x 4.37)
Weight		kg (lbs)	0.530 (1.17)	0.240 (0.53)	0.900 (1.98)
Conformity to standards			cUL 60950, UL 508 and CSA 142, UL 1604 and CSA 213 Class 1 Division 2, CE, GL		
			FM 3810, FM 3611 Class 1 Division 2	–	FM 3810, FM 3611 Class 1 Division 2
LED indicators			Power, activity, link	Power, activity, link, error	Power, activity, link, collision
Alarm contact			Power supply failure, permanent fault in hub, faulty link status of TP port (volt-free contact 1 A max. under ⎓ 24 V)		
Reference			499NEH10410	499NEH14100	499NOH10510

(1) Depends on the optical budget and fiber attenuation (typical specification: 2000 m (6.560 ft.).

Modicon Momentum automation platform

Cabling system

ConneXium transceivers

Presentation

The use of ConneXium transceivers makes it possible to perform the following:
- Creation of linear fiber optic bus topologies, for products with twisted pair cable Ethernet connection.
- Interfacing products with twisted pair cable Ethernet connection with fiber optic cable.

Transceivers are "plug and play" devices that do not need any configuration. For more details, consult our catalog "Transparent Ready, Ethernet TCP/IP and Web technologies".

ConneXium transceivers provide fiber optic connections for transmission in areas subject to interference (high levels of electromagnetic interference) and for long distance communications.

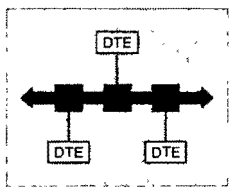

Linear topology on optical fiber

Characteristics and references

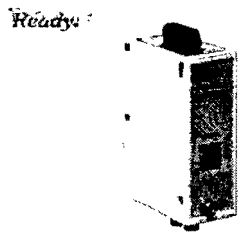

Transceivers				
Interfaces	Copper cable port	Number and type	1 x 10BASE-T port	1 x 100BASE-TX port
		Shielded connectors	RJ45	
		Medium	Shielded twisted pair	
		Line length	100 m (328 ft.)	
	Optical fiber ports	Number and type	1 x 10BASE-FL port	1 x 100BASE-FX port
		Connectors	ST (BFOC)	SC
		Medium	Multi mode optical fiber	
		Line length		
		50/125 µm fiber	2300 m (7.546 ft.) *(1)*	5000 m (16 404 ft) *(1)*
		62.5/125 µm fiber	3100 m (10.170 ft.) *(1)*	4000 m (13.123 ft.) *(1)*
		Optical budget		
		50/125 µm fiber	10 dB	8 dB
		62.5/125 µm fiber	13 dB	11 dB
Redundancy			P1 and P2 redundant power supplies	
Power supply	Voltage		⎓ 24 V (18 to 32), safety extra low voltage (SELV)	
	Power consumption		80 mA (100 max. at ⎓ 24 V)	190 mA (240 max. at ⎓ 24 V)
	Removable terminal		5-pin	
Operating temperature			0 to + 60 °C (32 to 140 °F)	
Relative humidity			10 to 95% non condensing	
Degree of protection			IP 30	IP 20
Dimensions W x H x D		mm (in)	40 x 134 x 80 (1.57 x 5.47 x 3.14)	47 x 135 x 111 (3.15 x 5.51 x 3.35)
Weight		kg (lbs)	0.520 (1.15)	0.230 (0.50)
Conformity to standards			cUL 60950, UL 508 and CSA 142, UL 1604 and CSA 213 Class 1 Division 2, CE, GL	
			FM 3810, FM 3611 Class 1 Division 2	–
LED indicators			P1 and P2 power supplies, Ethernet link/port status	
Alarm contact			Power supply failure, permanent fault in hub, faulty link status of TP port (volt-free contact 1 A max under ⎓ 24 V)	
Reference			**499NTR10010**	**499NTR10100**

(1) Depends on the optical budget and fiber attenuation (typical specification: 2000 m (6.560 ft).

Modicon Momentum automation platform

Cabling system

ConneXium switches

Presentation

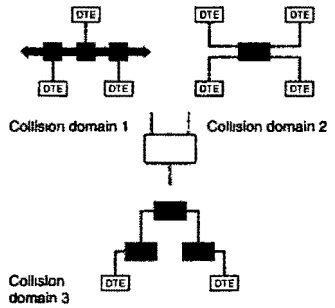

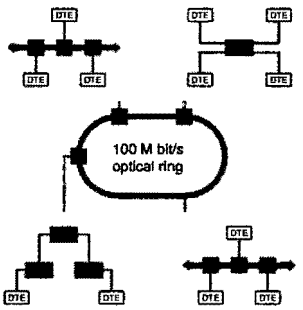

Switches are used to increase the limits of architectures based on hubs or transceivers, by separating collision domains. Higher layer communication is provided between the ports, and collisions at link layer are not propagated (filtering). They therefore improve performance by better allocation of the pass band due to the reduction of collisions and the network load.
Certain Connexium switches also enable redundant architectures to be created on twisted pair copper or fiber optic rings.
Switches are "plug & play" devices that do not need any configuration. They can also be administered remotely via the SNMP or HTTP protocols for monitoring and diagnostics purposes.

Characteristics and references

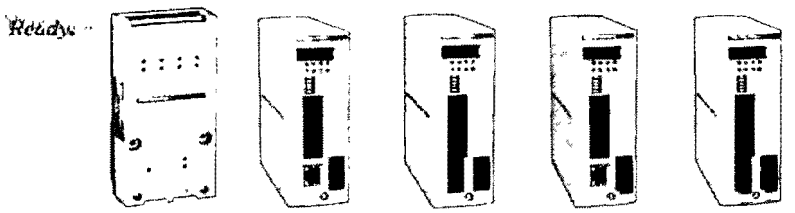

Switches			**Unmanaged basic**	**Shielded twisted pair and optical fiber, unmanaged**			
Interfaces	Copper cable ports	Number and type	5 x 10BASE-T/ 100BASE-TX ports	4 x 10BASE-T/ 100BASE-TX ports	3 x 10BASE-T/ 100BASE-TX ports	4 x 10BASE-T/ 100BASE-TX ports	3 x 10BASE-T/ 100BASE-TX ports
		Shielded connectors	RJ45				
		Medium	Shielded twisted pair				
		Max. distances	100 m (328 ft.)				
	Optical fiber ports	Number and type	–	1 x 100BASE-FX port	2 x 100BASE-FX ports	1 x 100BASE-FX port	2 x 100BASE-FX ports
		Connectors	–	SC			
		Medium	–	Multi mode fiber		Mono mode fiber	
		Fiber length					
		50/125 µm fiber	–	5000 m (16 404 ft.) *(1)*		–	
		62.5/125 µm	–	4000 m (13 124 ft.) *(1)*		–	
		9/125 µm	–	–		32 500 m (106.627 ft.) *(2)*	
		Optical budget					
		50/125 µm fiber	–	8 dB		–	
		62.5/125 µm	–	11 dB		–	
		9/125 µm		–		16 dB	
Topology	Number of switches	Cascaded	Any				
		Redundant in a ring	–				
Power supply redundancy			–	P1 and P2 redundant power supplies			
Power supply	Voltage		⎓ 24 V (19.2 to 30 V)	⎓ 24 V (18 to 32 V), safety extra low voltage (SELV)			
	Power consumption		100 mA (120 max.)	200 mA max.	240 mA max.	200 mA max	240 mA max.
	Removable terminals		3-pin	5-pin			
Operating temperature			0 to + 60°C (32 to 140 °F)				
Relative humidity			10 to 95% non condensing				
Degree of protection			IP 20				
Dimensions W x H x D		mm (in)	75.2 x 143 x 43 (2.96 x 5.63 x 1.69)	47 x 135 x 111 (3.15 x 5.51 x 3.35)			
Weight		kg (lbs)	0.190 (0.42)	0.330 (0.72)	0.335 (0.74)	0.330 (0.72)	0.335 (0.74)
Conformity to standards			UL508, CSA 1010, EN 61131-2	cUL 60950, UL 508 and CSA 142, UL 1604 and CSA 213 Class 1 Division 2, CE, GL			
LED indicators			Power supply, ETH link status, 10/100 M bps	P1 and P2 power supplies, Ethernet link status, transmission activity, error			
Alarm contact			–	Activity, power supply failure, permanent fault in switch, faulty link status of TP port (volt-free contact 1 A max. under ⎓ 24 V)			
Reference			**499NES25100**	**499NMS25101**	**499NMS25102**	**499NSS25101**	**499NSS25102**

(1) Depends on the optical budget and fiber attenuation (typical specification: 2 km)
(2) Depends on the optical budget and fiber attenuation (typical specification: 15 km)

Characteristics and references *(continued)*

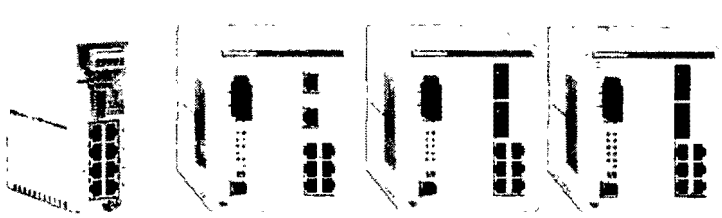

Switches			Unmanaged, copper	Managed, copper	Managed, copper + fiber	
Interfaces	Copper cable ports	Number and type	8 x 10BASE-T/ 100BASE-TX ports	7 x 10BASE-T/ 100BASE-TX ports	5 x 10BASE-T/100BASE-TX ports	
		Shielded connectors	RJ45			
		Medium	Shielded twisted pair			
		Max distances	100 m (328 ft.)			
	Optical fiber ports	Number and type	–		2 x 100BASE-FX ports	
		Connectors	–		SC	
		Medium	–		Multi mode optical fiber	Mono mode optical fiber
		Fiber length				
		50/125 µm	–		5000 m (16.404 ft.) *(1)*	–
		62 2/125 µm	–		4000 m (13.123 ft.) *(1)*	–
		9/125 µm	–		–	32 500 m (106.627 ft.) *(2)*
		Optical budget	–			
		50/125 µm	–		8 dB	–
		62 2/125 µm	–		11 dB	–
		9/125 µm	–		–	16 dB
	Ethernet services		–	FDR client, SNMP V3, SNTP, multicast filtering for optimization of the Global Data protocol, Web based configuration VLAN, IGMP Snooping, RSTP *(Rapid Scanning Three Protocol)*, Port priority, Flow control, Port security		
Topology	Number of switches	Cascaded	Any			
		Redundant in a ring	–	50 max.		
Redundancy			P1 and P2 redundant power supplies			
Power supply	Voltage		⎓ 24 V (88 to 32 V), safety extra low voltage (SELV)			
	Power consumption		125 mA (290 max.)	400 mA		
	Removable terminals		5-pin			
Operating temperature			0 to + 60°C	0 to + 55°C		
Relative humidity			10 to 95% non condensing			
Degree of protection			IP20			
Dimensions W x H x D		mm (in)	47 x 135 x 111 (3.15 x 5.51 x 3.35)	110 x 131 x 111 mm (4.33 x 5.16 x 4.37)		
Weight		kg (lbs)	0.230 (0.72)	0.460 (1.00)		
Conformity to standards			cUL 60950, UL 508 and CSA 14, UL 1604 and CSA 213 Class 1 Division 2, CE, GL			
LED indicators			P1 and P2 power supplies, Ethernet link status,	P1 and P2 power supplies, Ethernet link status, redundancy management		
Alarm contact			Power supply failure, permanent fault in hub, faulty link status of TP port (volt-free contact 1 A max. under ⎓ 24 V)			
			–	Redundancy health		
Reference			499NES18100	499NES27100	499NOS27100	499NSS27100

(1) Depends on the optical fiber budget and fiber attenuation (typical specification. 2 km).
(2) Depends on the optical fiber budget and fiber attenuation (typical specification: 15 km)

Modicon Momentum automation platform

Cabling system

ConneXium IP 67 switch

Characteristics and references

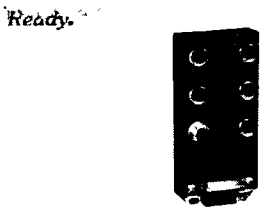

IP 67 switch			**Unmanaged, copper**
Interfaces	Copper cable ports	Number and type	6 x 10BASE-T/ 100BASE-TX ports
		Shielded connectors	M12 (type D)
		Medium	Shielded twisted pair
		Max distances	100 m (328 ft)
	Optical fiber ports	Number and type	–
		Connectors	–
		Medium	–
		Fiber length	–
		Optical budget	–
	Ethernet services		Store and forward, auto MDI/MDX (no need cross over cable), Duplex mode and speed auto negotiation, auto polarity
Topology	Number of switches	Cascaded	Any
		Redundant in a ring	–
Redundancy			–
Power supply	Voltage		⎓ 24 V (⎓ 18 to 32 V), safety extra low voltage (SELV)
	Power consumption		100mA
	Removable terminals		5-pin
Operating temperature			0 to + 60°C
Relative humidity			–
Degree of protection			IP67
Dimensions W x H x D		mm (in)	60 x 126 x 31 (2.36 x 4.96 x 1.22)
Weight		kg (lbs)	0.210 (0.46)
Conformity to standards			cUL 508 and CSA 22-214
LED indicators			Power supplies, link status, data activity
Alarm contact			–
Reference			**TCSESU051F0**

Separate parts		
Power cables, length 2,5 m (8.2 ft.)	Female M12 straight connector	Female M12 elbow wed connector
Reference	**XZCP1164L**	**XZCP1264L**
Spare power connector	Female M12 straight connector	Female M12 elbow wed connector
Reference	**XZCC12FDM50**	**XZCC12FCM50B**

Ethernet cables. see page 83.

Modicon Momentum automation platform

Cabling system

ConneXium connection cables

Presentation

ConneXium shielded connection cables are available in two versions to meet current standards and approvals:

■ Standard EIA/TIA 568 shielded twisted pair cables:
These cables conform to the EIA/TIA-568 standard, category 5, IEC 11801/EN 50173 class D. Their fire behavior conforms to NFC 32070# class C2 and IEC 322/1, Low Smoke Zero Halogen (LSZH).

■ UL and CSA 22.1 approved shielded twisted pair cables:
These cables are UL and CSA 22.1 approved. Their fire resistance conforms to NFPA 70.

490NT●000●●

References

Standard EIA/TIA 568 shielded twisted pair cables

Description	Pre-equipped at both ends	Length m (ft.)	Reference	Weight kg
Straight-through shielded twisted pair cables	2 RJ45 connectors For connection to terminal devices (DTE)	2 (6 6)	**490NTW00002**	–
		5 (16.4)	**490NTW00005**	–
		12 (39.4)	**490NTW00012**	–
		40 (131.2)	**490NTW00040**	–
		80 (262.5)	**490NTW00080**	–

Description	Pre-equipped at both ends	Length	Reference	Weight kg
Crossed cord shielded twisted pair cables	2 RJ45 connectors For connections between hubs, switches and transceivers	5 (16.4)	**490NTC00005**	–
		15 (49.2)	**490NTC00015**	–
		40 (131.2)	**490NTC00040**	–
		80 (262.5)	**490NTC00080**	–

490NOC00005

UL and CSA 22.1 approved shielded twisted pair cables

Description	Pre-equipped at both ends	Length	Reference	Weight kg
Straight-through shielded twisted pair cables	2 RJ45 connectors For connection to terminal devices (DTE)	2 (6.6)	**490NTW00002U**	–
		5 (16.4)	**490NTW00005U**	–
		12 (39.4)	**490NTW00012U**	–
		40 (131 2)	**490NTW00040U**	–
		80 (262.5)	**490NTW00080U**	–

Description	Pre-equipped at both ends	Length	Reference	Weight kg
Crossed cord shielded twisted pair cables	2 RJ45 connectors For connections between hubs, switches and transceivers	5 (16.4)	**490NTC00005U**	–
		15 (49 2)	**490NTC00015U**	–
		40 (131.2)	**490NTC00040U**	–
		80 (262.5)	**490NTC00080U**	–

490NOT00005

490NOR00005

Description	Pre-equipped at both ends	Length m (ft.)	Reference	Weight kg
Glass fiber optic cables for terminal devices (DTE) to hubs, switches and transceivers	1 SC connector and 1 MT-RJ connector	5 (16 4)	**490NOC00005**	–
	1 ST (BFOC) connector and 1 MT-RJ connector	5 (16 4)	**490NOT00005**	–
	2 MT-RJ connectors	3 (9 8)	**490NOR00003**	–
		5 (16.4)	**490NOR00005**	–
		15 (49 2)	**490NOR00015**	–

Modicon Momentum automation platform

Concept programming software

Presentation

Concept is a software configuration and application programming tool for the automation platform. It is a Windows-based software that can be run on a standard personal computer. The configuration task can be carried out online (with the PC connected to the CPU) or offline (PC only). Concept supports the configuration by recommending only permissible combinations, thereby preventing misconfiguration. During online operation, the configured hardware is checked immediately for validity, and illegal statements are rejected.

When the connection between programming unit (PC) and CPU is established, the configured values (e.g., from the variables editor) are checked and compared with actual hardware resources. If a mismatch is detected, an error message is issued.

Concept editors support five IEC programming languages:
- Function block diagram (FBD)
- Ladder diagram (LD)
- Sequential function chart (SFC)
- Instruction list (IL)
- Structured text (ST)

as well as Modsoft-compatible ladder logic (LL984). IEC 61131-3 compliant data types are also available. With the data type editor, custom data types can be converted to and from the IEC data types.

The basic elements of the FBD programming language are functions and function blocks that can be combined to create a logical unit. The same basic elements are used in the LD programming language; additionally, LD provides contact and coil elements. The SFC programming language uses basic step, transition, connection, branch, join and jump elements. The IL and ST text programming languages use instructions, expressions, and key words. The LL984 programming language uses an instruction set and contact and coil elements.

You can write your control program in logical segments. A segment can be a functional unit, such as conveyor belt control. Only one programming language is used within a given segment. You build the control program, which the automation device uses to control the process, by combining segments within one program. Within the program, IEC segments (written in FBD, LD, SFC, IL and ST) can be merged. The LL984 segments are always processed as a block by the IEC segments. Concept's sophisticated user interface uses windows and menus for easy navigation. Commands can be selected and executed quickly and easily using a mouse. Context-sensitive help is available at each editing step.

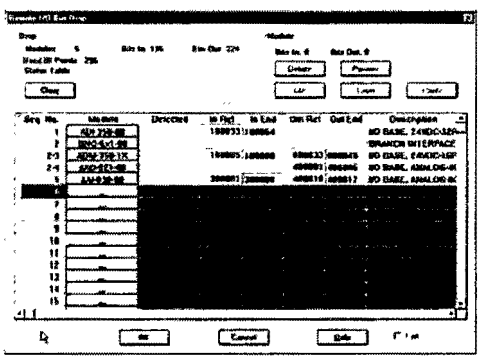

PLC hardware configuration

Variables for linking basic objects within one section are not required by the graphic programming languages (FBD, LD, SFC and LL984) since these links are created by connections. These connections are managed by the system, which eliminates any configuration effort. Other variables, such as variables for data transfers between different sections, are configured with the variables editor. With the data type editor, custom data types can be derived from existing data types.

Modicon Momentum automation platform

Concept programming software

Functions

Concept provides an editor for each programming language. These editors contain custom menus and tool bars. You can select the editor to be used as you create each program segment.

In addition to the language editors, Concept provides a data type editor, a variables editor and a reference data editor.

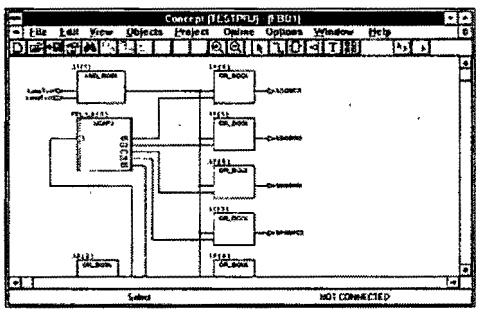

Function block diagram (FBD)

With the IEC 61131-3 function block diagram language, you can combine elementary functions, elementary function blocks (EFBs) and derived function blocks (all three of which are known as FFBs) with variables in an FBD. FFBs and variables can be commented. Text can be freely placed within the graphic. Many FFBs offer an option for input extensions.

Concept provides various block libraries with predefined EFBs for programming an FBD. EFBs are grouped in the libraries according to application types to facilitate the search.

In the FBD editor, you can display, modify and load initial values; current values can be displayed. The CLC and CLC_PRO libraries allow you to display animated diagrams of the FFBs and a graph of the current values.

For custom function blocks (DFBs), the Concept-DFB editor is used. In this editor, you can create your own function blocks from EFBs or existing DFBs. DFBs created in the FBD editor can be recalled in the LD, IL and ST editors, and DFBs created in the LD, IL and ST editors can be used in the FBD editor.

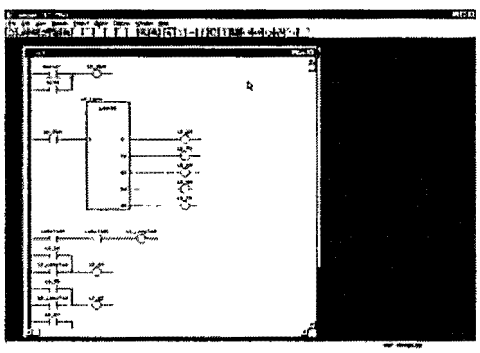

Ladder diagram (LD)

With the IEC 61131-3 ladder diagram language, you can build an LD program with elementary functions, function blocks and derived function blocks (all of which are known as FFBs), along with contacts, coils and variables. FFBs, contacts, coils and variables can be commented. Text can be placed freely within the graphics. Many FFBs offer an option for input extensions.
The structure of an LD segment corresponds to that of a current path for relay circuits. On its left side is a left bus bar, which corresponds to the phase (L conductor) of a current path. As with a current path, only the LD objects (contacts, coils) connected to a power supply (i.e., connected to the left bus bar) are processed in LD programming. The right bus bar, which corresponds to the neutral conductor, is not visible. However, all coils and FFB outputs are internally connected to it in order to create a current flow.
The same EFB block libraries available for the FBD editor can be used in the LD editor to program a ladder diagram.

In the LD editor, initial values can be displayed, modified and loaded; current values can be displayed. For the EFBs in libraries CLC and CLC_PRO, animated diagrams of the FFBs and a graph of the current values can be displayed.

For custom function blocks (DFBs), the Concept-DFB editor is used. With this editor, you can create your own function blocks from EFBs or existing DFBs. DFBs created in the LD editor can be recalled in the FBD, IL and ST editors, and DFBs created in the FBD, IL and ST editors can be used in the LD editor.

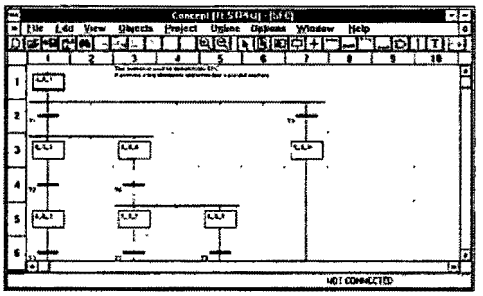

Functions (continued)

Sequential function chart (SFC) *(1)*
With the IEC 61131-3 sequential function chart (SFC) language, you can define a series of SFC objects that compnse a control sequence. Steps, transitions and jumps in the sequence can be commented. You can place text freely within graphics. You can assign any number of actions to every step. A series of monitoring functions–e.g., maximum and minimum monitonng time–can be integrated into each step's characteristics. The actions can be assigned an attribute symbol (as required by IEC) to control the action's performance after it has been activated–e.g., a variable can be set to remain active after exiting.

Instruction list (IL)
With the IEC 61131-3 IL language, you can call entire functions and function blocks conditionally or unconditionally, execute assignments and make conditional and unconditional jumps within a program segment.

IL is a text-based language, and standard Windows word processing tools can be used to generate code. The IL editor also provides several word processing commands. Keywords, separators and comments are spell-checked automatically as they are entered. Errors are highlighted in color.

For custom function blocks (DFBs), the Concept-DFB editor is used. In this editor, you can create your own function blocks from EFBs or existing DFBs. DFBs created in the IL editor can be recalled in the ST, LD and FBD editors, and DFBs created in the ST, LD and FBD editors can be used in the IL editor.

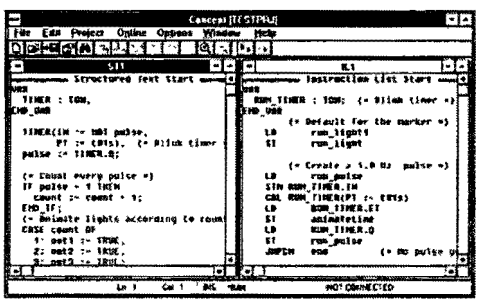

Structured text (ST)
With the IEC 61131-3 ST language, you can call function blocks, execute functions and assignments and conditionally execute and repeat instructions. The ST programming environment is similar to Pascal. It is a text-based language, and Windows word processing functions can be used to enter code. The ST editor itself also provides several word processing commands. Keywords, separators, and comments are spell-checked automatically as they are entered. Errors are highlighted in color.

Custom function blocks (DFBs) created with the ST editor can be called in the IL, LD and FBD editors; DFBs created in the IL, LD and FBD editors can be used in the ST editor.

(1) SFC language, only available with Concept M and Concept XL software.

Functions (continued)

Data type editor

The data type editor defines new derived data types. Any elementary data types and derived data types already existing in a project can be used for defining new data types. With derived data types, various block parameters can be transferred as one set. Within the program, this set is divided again into single parameters, processed, then output as either a parameter set or individual parameters. Derived data types are defined in text format, and standard Windows word processing tools can be used. The data type editor also provides several word processing commands.

Variables editor

The variables editor contains input options for:
- The variable type (located variable, unlocated variable, constant).
- The symbolic name.
- The data type.
- Direct address (explicit, if desired).
- Comments.
- Identification as human-machine interface (HMI) variable for data exchange.

Reference data editor

In online mode, the reference data editor displays, forces and controls variables.

The editor contains the following options:
- Default values for the variable.
- Status display for the variable.
- Various format definitions.
- The ability to isolate the variable from the process.

Functions (continued)

Libraries

EC Library

The IEC library contains the EFBs defined in IEC 61131-3 (calculations, counters, timers, etc)

Extended Library

The extended library contains useful supplements to various libraries. It provides EFBs for mean value creation, maximum value selection, negation, triggering, converting, building a traverse with interpolation of the first order, edge detection and determination of the neutral range for process variables.

System Library

The system library contains EFBs in support of system functions. It provides EFBs for cycle time detection, utilization of various system clocks, control of SFC sections and system status display.

CLC and CLC_PRO Library

The CLC library is used for defining process-specific control loops. It contains control, differentiation, integration and polygon graph EFBs. The CLC_PRO library contains the same EFBs as the CLC library along with data structures.

Communication Library

The communication libraries of built-in function blocks provide easy integration of programs which allow communication between PLCs or HMI devices from within the PLC's application program. Like other function blocks, these EFBs can be used in all languages to share data, or provide data to the HMI device for display to the operator.

Diagnostics Library

The diagnostics library is used for troubleshooting the control program. It contains EFBs for action, reaction, interlocking, and process prerequisite diagnostics, along with signal monitoring.

LIB984 Library

The LIB984 library provides common function blocks used in both the 984 ladder logic editor and the IEC languages. This allows for easy transition of portions of application code from the 984LL environment to the IEC environment.

Fuzzy Logic Library

The fuzzy library contains EFBs for fuzzy logic.

Analog I/O Library

The ANA_IO library is used to process analog values.

Modicon Momentum automation platform
Concept programming software

References

Concept packages

Description	License type	Reference	Weight kg
Concept S Version 2.6	Single-station	**372SPU47101V26**	–
Concept M Version 2.6	Single-station	**372SPU47201V26**	–
Concept XL Version 2.6	Single-station	**372SPU47401V26**	–
	Group (3 stations)	**372SPU47411V26**	–
	Team (10 stations)	**372SPU47421V26**	–
	Site (> 10 stations)	**372SPU47431V26**	–
Concept EFB Toolkit Version 2.6	Single-station	**332SPU47001V26**	–
HVAC Function Blocks Library	Site (> 10 stations)	**372HVA16030V25**	–

Concept package for exploitation and maintenance

Description	License type	Reference	Weight kg
Concept Application Loader	Single-station	**372SPU47701V26**	–

Concept upgrades

Description	License type	Reference	Weight kg
Concept XL V x.x to Concept XL V 2.6	Single-station	**372ESS47401**	–
	Group (3 stations)	**372ESS47403**	–
	Team (10 stations)	**372ESS47410**	–
	Site (> 10 stations)	**372ESS47400**	–
Concept S V x.x to Concept S V 2.6	Single-station	**372ESS47101**	–
Concept M V x.x to Concept M V 2.6	Single-station	**372ESS47201**	–
Modsoft V x.x to Concept XL V 2.6	Depends on number of users	**372ESS48501**	–
Concept EFB Toolkit V x.x to V 2.6	–	**372ESS47101**	–

Documentation

Description	Number of volumes	Reference *(1)*	Weight kg
Concept Installation Instructions	1	**840USE4920●**	–
Concept User Manual	3	**840USE4930●**	–
Concept IEC Block Library	13	**840USE4940●**	–
Concept 984 LL Block Library	2	**840USE4960●**	–
Concept EFB Tool User Manual	1	**840USE49501**	–

(1) ● *= 0 in this position indicates english language, 1 indicates french language, 2 indicates german language and 3 indicates spanish language.*

Modicon Momentum automation platform

ProWORX 32 programming software

ProWORX 32

Presentation

ProWORX 32 programming software is a full-featured, Modicon PLC programming software that is compatible with Windows platforms (98/NT/2000/XP) that gives you the power to program all your Modicon controllers online or offline, manage your I/O subsystems, and analyze your plant's activity in real-time.

Some of the new ProWORX 32 features:
32-bit processing. With 32-bit processing, ProWORX 32 is an even more powerful solution than its predecessors, ProWORX Plus and ProWORX NxT. 32-bit processing lets you utilize the power of state-of-the-art operating systems for optimal development and operational performance.
A comprehensive suite of tools. ProWORX 32 provides everything you will need to start, configure, test and complete your project, quickly, reliably and professionally. With its improved suite of standard utilities, ProWORX 32 is a virtual "one stop shop" for your Automation Journey. No more searching on the web for special features or functions, they're all included to save you time and increase your productivity.
A powerful offer. In addition, ProWORX 32 will simplify and speed up your system development and commissioning time with powerful diagnostics, easier integration, and greater openness and flexibility.
Easier integration. Using standard Microsoft components for the basis of ProWORX 32 opens up a wealth of user data. Import and export capabilities have been enhanced to provide a variety of integration options for HMI and third party devices, such as a built in "Alliance Tool" which allows users to create hardware profiles for newly developed devices. The profiles can even be sent electronically to Schneider Electric for inclusion in future product releases.

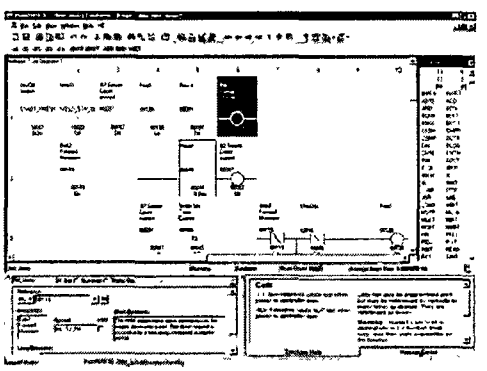

Windows environment

The familiar Windows-based programming environment means you spend less time learning how to do things, and more time being productive. ProWORX uses familiar Windows features like user-defined screens, drag-and-drop, cut and paste, search, and global replace.

Conversion

484 to 984 in one step! The most flexible conversion tools available in the automation industry. That is the reputation ProWORX products have always enjoyed, and ProWORX 32 is no exception. With the ability to convert from older project databases to this latest tool, ProWORX 32 supports almost 30 years of PLC heritage.

Multiple projects

Imagine the time and effort you could save by testing a new project with an existing project while it is running live. Now you can with the Multiple Projects function of ProWORX 32, even with two PLCs running simultaneously! Perform diagnostic checks to validate interdependencies between your emulated project and your live applications, all in real time, so you can go live with total confidence.

Intuitive Register Editor

A powerful analysis tool, the Data Watch Window shows you information from your plant in real-time, or logs it to disk for in-depth historical analysis later on. Easily get the data you need to make informed, effective production decisions. View and edit data in full page display, see trends and track data points against time in a spreadsheet, and monitor any combinations of discrete and analog activities.

I/O drawing generator

Save hours of painstaking effort with ProWORX 32's I/O Drawing Generator, which automatically creates wiring diagrams for the I/O cards defined in the Traffic Cop. Generate necessary drawings all at once or just one card at a time – simply select an address the I/O card uses with the Network Editor, then click the drawing button on the Hardware Back Referencing panel to display the diagram, and if desired, save it as an AUTOCAD-compatible.DXF file or print it.

Modicon Momentum automation platform

ProWORX 32 programming software

Presentation (continued)

Network editor

With the Network Editor, ProWORX 32 reduces development time by using the same commands and instructions for every controller. Simply cut, copy, and paste networks from one platform to any other.

Program Documentation

ProWORX 32 is first-class software with first-class program documentation. Use one of the many standard templates to get started, and progress to assemble your own custom documentation. For better references and easier-to-use documentation, we have provided annotation down to the "Bit" level to allow longer comments and more lines of text. Even simple things like using Windows O/S fonts to eliminate printer issues demonstrates that every detail has been considered.

Real-time network status

Find the controller you need fast and simplify network diagnostics with ProWORX 32's powerful Network Scan feature. Network Scan searches your Modbus or Modbus Plus networks, then identifies and graphically displays each device found and shows its status.

Powerful diagnostics

To effectively control your operation, you need to see your operation in action. The built-in HMI allows you to build a simple representation of your application to visualize the entire operation. With the "Data Watch Window", you can see values in real-time and perform "Data Logging" for later data analysis. The "Trending" tool is a simple built-in chart recorder to help you visualize performance factors without having to crunch hard data. And "Diagnostic Trace" helps to easily solve complicated issues such as network element interdependencies.

Advanced I/O management

Ensure that the I/O card you are configuring in the software matches the one on your plant floor with ProWORX 32's graphical Traffic Cop. It displays I/O cards on your screen the same way they look in real life, eliminating all confusion. To place a card, just select it from the convenient drop down menu and then drag it into the controller slot you want. To save even more time, the Traffic Cop automatically associates the card's I/O points with a block of free addresses in your controller. Once configured, manage your I/O with Pro WORX 32's complete documentation tools, with references for each head, drop, rack, slot and address. And the Traffic Cop's graphical display shows you at a glance that your I/O is healthy.

Presentation (continued)

Client/Server Tools

ProWORX 32 allows projects to be developed in a collaborative environment without sacrificing control and security by utilizing the ProWORX 32 server as the central repository for projects, the center for security, and the hub for communications. The system administrator has total control over user accounts, user groups, passwords, rights, and auditing policies and can grant access when and where needed.

The client/server relationship allows projects to be skillfully managed and controlled. The server can be used to keep "Master" versions of PLC projects for editing (subject to rights), while editing is achieved using the client. This can be done via a standalone PC or even on the server since both client and server can reside on the same PC.

The server has the capability to schedule software backups of the controller, detect software modifications and store multiple versions. Even more powerful is the ability to communicate from the client to the server using either Ethernet TCP/IP or Modbus Plus.

Project Emulator

The project emulator is a very powerful tool that will help save considerable time in the design and testing of your system. It provides the ability to test projects prior to running them in the PLC run-time environment to ensure your system will run at peak efficiency immediately upon commissioning. Two emulators are provided that test interdependent projects with one another, giving you complete confidence and peace of mind before going live.

Material List Generation

Want a shopping list for your PLC equipment? The Material List Generation function automatically creates a list for the project, either online or offline, even taking into account the contents of the Traffic Cop. Add prices and comments once the list is generated, saving you time and insuring that all required components are fully documented and identified.

Modicon Momentum automation platform
ProWORX 32 programming software

ProWORX 32

ProWORX Client/Server software

ProWORX packages

Description	License type	Reference	Weight kg
ProWORX 32	Server	**372SPU78001PSEV**	–
	Client/Server Suite	**372SPU78001PSSV**	–
	Offline/Online Client	**372SPU78001PDEV**	–
	Group (3 stations)	**372SPU78001PSTH**	–
	Team (10 stations)	**372SPU78001PSTE**	–
	Site (> 10 stations)	**372SPU78001SITE**	–
	Online Client	**372SPU78101PONL**	–
ProWORX 32 Lite	Offline/Online Client	**372SPU71001PLDV**	–
	Group (3 stations)	**372SPU71001PLTH**	–
	Team (10 stations)	**372SPU71001PLTE**	–
Legacy Product Upgrade to ProWORX 32	Client	**372SPU78401LPUP**	–
	Group (3 stations)	**372SPU78401LPTH**	–
	Team (10 stations)	**372SPU78401LPTE**	–
	Multi-station Incremental Addition	**372SPU78401SEAT**	–

Documentation

Description	Language	Reference	Weight kg
ProWORX 32 User Manuals	English	**372SPU78001EMAN**	–
	French	**372SPU78001FMAN**	–
	German	**372SPU78001DMAN**	–
	Spanish	**372SPU78001SMAN**	–

Modicon Momentum automation platform

Aggressive environments protection
Optional conformal coating

Presentation

If your control system needs to operate in a corrosive environment, selected Momentum modules can be ordered with a conformal coating applied to components of the product. Conformal coating will extend its life and enhance its environmental performance capabilities.

Mixed flowing gas (power on)

Standard	Pollutant	Parts/billion	Momentum's performance
EIA 364-65 level III	Cl_2	20 (±5)	Meets the standard
	NO_2	200 (±50)	Exceeds standard (1250 parts/billion)
	H_2S	100 (±20)	Meets standard
ISA-S71.04 GX severe	Cl_2	10	Exceeds standard (20 parts/billion)
	NO_2	1250	Meets standard
	H_2S	50	Exceeds standard (100 parts/billion)
	SO_2	300	Meets standard

Humidity (operating)

Standard	Concentration (%)	Momentum's performance
IEC-68-2-3	93 @ 60 °C (140 °F)	Meets standard

Salt mist (non-operating)

Standard	Concentration (%)	Momentum's performance
IEC 68-2-11	5 (±1)	Exceeds standard (5.7%)

Fungus resistance

Standard		Momentum's performance
MIL-I-46058C		Designed to meet standard

Temperature cycling (operating)

Standard	Cycles	Momentum's performance
IEC 68-2-14	100 @ 0...60 °C (32...140 °F)	Meets standard

Dust (non-operating)

Standard	Pollutant	Weight (%)	Momentum's performance
EIA 364-TP91 (pending)	Silica	36	Meets standard
	Calcite	29	Meets standard
	Iron oxide	12	Meets standard
	Alumina	8	Meets standard
	Gypsum	5	Meets standard
	Paper fiber	3	Meets standard
	Cotton fiber	3	Meets standard
	Polyester fiber	2	Meets standard
	Carbon black	1	Meets standard
	Human hair	0.5	Meets standard
	Cigarette ash	0 5	Meets standard

Modicon Momentum automation platform

Aggressive environments protection
Optional conformal coating

References

This following is a list of Momentum products that are availability with the optional conformal coating.

Note : Please note that a "C" is appended to the standard reference for those Momentum products.

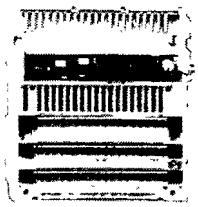

170ADI3●000C

Discrete I/O bases

Type of current	Input voltage		Modularity (no. of points)	Conformity EC 1131-2	Reference	Weight kg
Discrete input bases	24 VDC		16 (1 x 16)	Type 1	170ADI34000C	0 190
			32 (2 x 16)	Type 1	170ADI35000C	0 200
Type of current	**Output voltage**		**Modularity (no. of points)**	**Current per output**	**Reference**	**Weight kg**
Discrete output bases solid state, protected	24 VDC		16 (2 x 8)	0.5 A	170ADO34000C	0 210
			32 (2 x 16)	0.5 A	170ADO35000C	0.210
Type of current	**Input voltage**	**Output voltage**	**Modularity Input**	**Outputs, current**	**Reference**	**Weight kg**
Discrete I/O bases	24 VDC Type 1	24 VDC protected solid state	16 I (1 x 16)	16 O (2 x 8) 0.5 A	170ADM35010C	0.200
			16 I (4 x 4)	8 O (2 x 4) 2 A	170ADM37010C	0.220
	24 VDC Type 1	24/230 VAC 20/115 VDC relay	10 I (1 x 10)	8 O (2 x 4) 2 A	170ADM39030C *(1)*	0.260

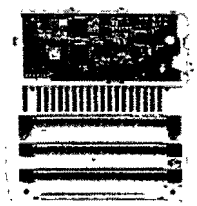

170AAI●●0●0C

Analog I/O bases

Type	Number of channels	Ranges	Reference	Weight kg
Analog inputs 2 bits + sign	16 single-ended	± 5 V, ± 10 V, 4-20 mA	170AAI14000C	0.215
Analog outputs 15 bits + sign	4, differential	Pt 100, Pt 1000, Ni 100 thermocouples B, E, J, K, N, R, S, T	170AAI52040C	0.215
	8, differential	± 5 V, ± 10 V, 1-5 V± 20 mA, 4-20 mA	170AAI03000C	0 215
Analog outputs12 bits + sign	4	± 10 V, 4-20 mA	170AAO92100C	0 215

Type of discrete and analog I/O bases				Reference	Weight kg
Inputs		**Outputs**			
4 differential analog inputs 13 bits + sign	± 5 V, ± 10 V, 1-5 V ± 20 mA, 4-20 mA	2 analog outputs 12 bits	0-20 mA ± 10 V	170AMM09000C	0.240
4 discrete inputs	24 VDC	2 discrete inputs	24 VDC-0,5 A		

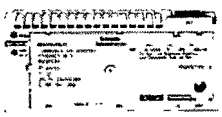

170ENT11002C

Communication adapters

Description	Characteristics	Reference	Weight kg
Ethernet TCP/IP network	10 M bit/s	170 ENT 110 02C	0.070
Modbus Plus network	IEC format, non-redundant	170 PNT 110 01C	0.070
	984 format, non-redundant	170 NEF 110 21C	0.070
Fipio bus	Bus manager Premium	170 FNT 110 20C	0 070
INTERBUS	Generation 3 (SUPI 2)	170 INT 110 00C	0.070
	Generation 4 (SUPI 3, version 2)	170 INT 110 03C	0 070
Profibus DP	9.6 K bit/s to 12 M bit/s	170 DNT 110 00C	0.070

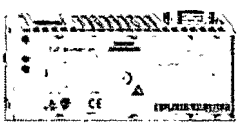

171CCC●●0●0

M1/M1E processor adapters

Memories	Communication Port(s)	Clock Speed	Reference	Weight kg
256 Ko RAM, 256 Ko Flash	1 Modbus, 1 I/O Bus	32 MHz	171CCS76000C	0 042
512 Ko RAM, 256 Ko Flash	1 Modbus, 1 I/O Bus	32 MHz	171CCC76010C	0.042
544 Ko RAM, 512 Ko Flash	1 Ethernet, 1 I/O Bus	50 MHz	171CCC96020C	0.042
544 Ko RAM, 1 Mo Flash, IEC Exec	1 Ethernet, 1 I/O Bus	50 MHz	171CCC96030C	0.042

172PNN21022C

Option adapters

Memories		Reference	Weight kg
Modbus Plus network	Single port, Time-of-Day *(TOD)* and battery backup	172PNN21022C	0.070
Modus link	2 x RS 232/RS 485 ports, Time-of-Day *(TOD)* and battery backup	172JNN21032C	0.070

(1) Operating voltage 24 VDC.

Modicon Momentum automation platform

Enhanced grounding system

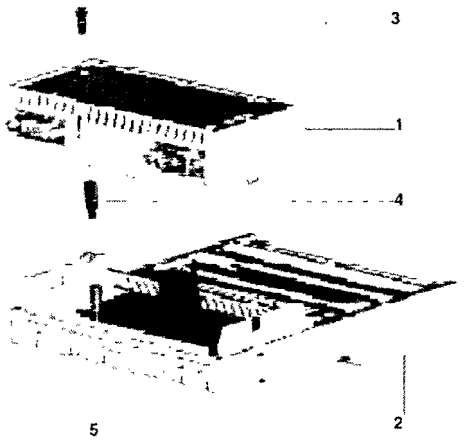

1 Communication adapter cover
2 I/O base
3 Standard screw M3-6
4 Male-female standoff
5 Added standoff

Momentum communication adapter ground screw

Due to new INTERBUS standards for electrical noise immunity, a number of Momentum products have been updated to include the enhanced grounding system, which is required to meet the revised electrical noise immunity standard (ability to pass a 2.2 k VDC electrical fast transient burst test)

This grounding system includes a ground screw in the communication or M1/M1E processor adapter, which is connected to a fixed standoff-ground nut on the printed circuit board and to a standoff on selected Momentum I/O bases

Nota : *This electrical noise immunity requirement applies only to systems that require INTERBUS certification, version 2, and not to any other communication network that Momentum I/O currently uses. The standard electrical fast transient test for Momentum is 500 VDC.*

The following is a list of the Momentum modules that currently have been updated to include the new grounding system:
- Communication adapters.
- M1/M1E processor adapters and option adapters
- Discrete and analog I/O bases

References

Range	Description	Reference	See page
Communication adapters	Ethernet TCP/IP 10/100 M bits/s (V2)	**170ENT11001**	49
	Ethernet TCP/IP 10 M bits/s (V1)	**170ENT11002**	49
	INTERBUS SUPI 3 (V2)	**170INT11003**	57
	Fipio bus (for Premium) (V2)	**170FNT11001**	55 / 96
M1/M1E processor adapters	64 K, 1 Modbus, 20 MHz	**171CCS70000**	70
	64 K, 1 Modbus, 32 MHz	**171CCS70010**	70
	64 K, 2 Modbus, 20 MHz	**171CCS78000**	70
	256 K, 1 Modbus, 1 I/O bus, 32 MHz	**171CCS76000**	70
	512 K, 1 Modbus, 1 I/O bus, 32 MHz	**171CCC76010**	70
	512 K, 2 Modbus, 32 MHz	**171CCC78010**	70
	544 K, 1 Modbus, 1 Ethernet, 50 MHz	**171CCC98020**	70
	544 K, 1 Ethernet, 1 I/O bus, 50 MHz	**171CCC96020**	70
	544 K, IEC Exec, 1 Modbus, 1 Ethernet, 50 MHz	**171CCC98030**	70
	544 K, IEC Exec, 1 Ethernet, 1 I/O bus, 50 MHz	**171CCC96030**	70
Option adapters	Modbus Plus, single port	**172PNN21022**	77
	Modbus Plus, dual redundant ports	**172PNN26022**	77
	RS 232/RS 485 serial port	**172JNN21032**	77
Discrete input bases	24 VDC 16 inputs	**170ADI34000**	19
	24 VDC 32 inputs	**170ADI35000**	19
Discrete output bases	24 VDC 16 solid state outputs 0.5 A	**170ADO34000**	19
	24 VDC 32 solid state outputs0.5 A	**170ADO35000**	19
	DC/AC 6 relay form "C" outputs 5 A	**170ADO83030**	19
Discrete I/O bases	24 VDC 16 inputs/16 outputs 0.5 A	**170ADM35010**	19
	24 VDC 16 fast inputs/16 outputs 0.5 A	**170ADM35011**	19
	24 VDC 16 inputs/16 outputs 0.5 A	**170ADM35015**	19
	24 VDC 16 inputs wiring check/ 12 outputs 0 5 A	**170ADM39010**	19
	24 VDC 16 inputs/8 outputs 2 A	**170ADM37010**	19
	12 to 60 VDC 16 inputs/16 outputs 0.5 A	**170ADM85010**	19
	24 VDC 10 inputs/AC or DC/8 relay 2A	**170ADM39030**	19
		170ARM37030	19
Analog input bases	16 single-ended inputs 12 bits + sign	**170AAI14000**	34
	8 differential inputs 15 bits + sign	**170AAI03000**	34
Discrete and analog I/O bases	4 differential analog inputs/2 analog outputs	**170AMM09000**	34
	4 discrete inputs/2 discrete outputs	**170AMM09001**	34
	6 analog inputs/4 analog outputs	**170ANR12090**	34
	8 discrete inputs/8 discrete outputs	**170ANR12091**	34
Specialty I/O bases	High-speed counter base, 2 independent counters 200 kHz max	**170AEC92000**	42
	I/O base with Modbus RS 485 communication port and 120 VAC 6 inputs/3 outputs 0,5 A	**170ADM54080**	42

Modicon Momentum automation platform
User Documentation

References

Description	Language	Reference	Weight kg
Momentum I/O bases user guide	English	**870USE00200**	–
	French	**870USE00201**	–
	German	**870USE00202**	–
	Spanish	**870USE00203**	–
High-Speed counter base (170 AEC 920 00) user guide	English	**870USE00800**	–
	French	**870USE00801**	–
	German	**870USE00802**	–
M1/M1E processor adapters and option adapter user guide	English	**870USE10110**	–
	French	**870USE10111**	–
	German	**870USE10112**	–
	Spanish	**870USE10113**	–
INTERBUS communication adapters user guide	English	**870USE01000**	–
	French	**870USE01001**	–
	German	**870USE01002**	–
	Spanish	**870USE01003**	–
INTERBUS communication adapter user guide	English	**870USE00300**	–
	French	**870USE00301**	–
Profibus DP communication adapter user guide (includes the GSD configuration software on 3.5" disk)	English	**870USE00400**	–
	French	**870USE00401**	–
	German	**870USE00402**	–
Modbus Plus communication adapter, 170 PNT Series user guide	English	**870USE10300**	–
	French	**870USE10301**	–
	German	**870USE10302**	–
Modbus Plus communication adapter, 170 NEF Series user guide	English	**870USE11100**	–
Fipio communication adapter (170 FNT 110 00) user guide	English	**870USE00500**	–
	French	**870USE00501**	–
	German	**870USE00502**	–
	Spanish	**870USE00503**	–
Fipio communication adapter (170 FNT 110 01) user guide	English	**870USE10500**	–
	French	**870USE10501**	–
	German	**870USE10502**	–
	Spanish	**870USE10503**	–
DeviceNet communication adapter user guide (includes the EDS configuration software on 3 5" disk)	English	**870USE10400**	–
Fipio Bus / Fipway network reference manual	English	**TSXDRFIPE**	–
	French	**TSXDRFIPF**	–
	German	**TSXDRFIPG**	–
	Spanish	**TSXDRFIPS**	–
Modbus Plus network planning and installation guide	English	**890USE10000**	–
	French	**890USE10001**	–
	German	**890USE10002**	–
	Spanish	**890USE10003**	–
Modbus Plus network BM85 bridge multiplexer user guide	English	**890USE10300**	–
Ethernet TCP/IP network 10BASE-T and 100BASE-TX	English	**490USE13300**	–
	French	**490USE13301**	–
	German	**490USE13302**	–
	Spanish	**490USE13303**	–
Modbus/TCP/IP Ethernet communication adapter user guide	English	**870USE11400**	–
	French	**870USE11401**	–
	German	**870USE11402**	–
	Spanish	**870USE11403**	–
XMIT Function Block version 3.0 user guide	English	**840USE11300**	–

In some countries, certification of certain electrical components is enforced by law. A standard conformity certificate is then issued by the official organization. Each certified product must carry approval symbols when enforced.
Use on board merchant navy vessels generally requires prior approval (= certification) of an electrical device by certain marine classification authorities.

Key	Certification body	Country
CSA	Canadian Standards Association	Canada
C-Tick	Australian Communication Authority	Australia
UL	Underwriters Laboratories	USA
Key	**Classification authority**	**Country**
ABS	American Bureau of Shipping	USA
BV	Bureau Veritas	France
DNV	Det Norske Veritas	Norway
GL	Germanischer Lloyd	Germany
GOST	Institut de recherche Scientifique Gost Standardt	C.I.S., Russia
LR	Lloyd's Register	United-Kingdom
RINA	Registro Italiano Navale	Italy
RMRS	Register of Shipping	C.I.S.

The table below shows the situation as of 01/06/2005 for certifications obtained or pending from organizations for base PLCs. An overview of certificates for Telemecanique products is available on our Internet web site: www.telemecanique.com

Product certifications

	Certifications					
			C-Tick			
Certified / Pending certification	UL	CSA	ACA	SIMTARS	GOST	Hazardous locations Class 1 Div 2 (1)
	USA	Canada	Australia	Australia	CEI, Russia	US
Advantys STB						FM
Advantys Telefast						
ConneXium						(4)
Lexium 05						
Lexium 17D						
Magelis iPC	(2)					UL
Magelis XBT G						
Magelis XBT F/FC/H/P/E/HM/PM			(4)			
Magelis XBT N/R						CSA/UL
Modicon Momentum						FM (5)
Modicon Premium PL7						CSA
Modicon Premium Unity						CSA
Modicon Quantum Concept						FM
Modicon Quantum Unity						FM
Modicon TSX Micro						
TBX						
Twido	(3)	(3)				CSA/UL (4)
Twin Line						

*(1) **Hazardous locations**: CSA 22 2 no. 213, certified products are suitable for use in Class I, division 2, groups A, B, C and D or non-hazardous locations only*
(2) Depending on product, consult our site. www.telemecanique.com
(3) cULus north-american certification (Canada and US).
(4) Only XBT F/FC.
(5) Depending on product, see pages of charactenstics in this catalog.

Local certifications

BG	Germany	TSXDPZ10D2A safety module (TSX Micro) TSXPAY262/282 safety modules (Premium)
AS-Interface	Europe	TWDNOI10M3 master module (Twido) TSXSAZ10 master module (TSX Micro) TSXSAY100 / 1000 master modules (Premium) TBXSAP10 Fipio bus/AS-Interface bus gateway

Marine classification

Marine classification des authorities

	ABS	BV	DNV	GL	LR	RINA	RMRS
Certified / *Pending certification*	USA	France	Norway	Germany	Unit.-Kingdom	Italy	C.I.S.
Advantys STB							
Advantys Telefast							
ConneXium							
Lexium 05							
Lexium 17D							
Magelis iPC							
Magelis XBT G							
Magelis XBT F/FC/H/P/E/HM/PM							
Magelis XBT-N/R				*(3)*		*(3)*	
Modicon Momentum							
Modicon Premium PL7							
Modicon Premium Unity	*(3)*						
Modicon Quantum Concept							
Modicon Quantum Unity							
Modicon TSX Micro							
TBX							
Twido							
Twin Line							

(1) Depending on product, consult our site: **www.telemecanique.com**
(2) Except Magelis **XBTG2110.**
(3) Request for Marine certifications forecast 4th quarter 2004.

Community regulations

European directives

The opening of European markets implies a harmonization of regulations in the various European Union member states.
European Directives are documents used to remove obstacles to the free movement of goods and their application is compulsory in all states of the European Union.
Member states are obliged to transcribe each Directive into their national legislation and, at the same time, to withdraw any conflicting regulations.
The Directives, particularly those of a technical nature with which we are concerned, only set objectives, called "general requirements".
The manufacturer must take all necessary measures to ensure that his products conform to the requirements of each Directive relating to his equipment.
As a general rule, the manufacturer affirms that his product conforms to the necessary requirements of the Directive(s) by applying the CE label to his product.
CE marking is applied to Telemecanique products where relevant.

The significance of CE marking

- CE marking on a product means that the manufacturer certifies that his product conforms to the relevant European Directives; it is necessary in order that a product which is subject to a Directive(s) can be marketed and freely moved within the European Union.
- CE marking is intended solely for the national authorities responsible for market regulation.

For electrical equipment, only conformity of the product to standards indicates that it is suitable for use, and only a guarantee by a recognized manufacturer can ensure a high level of quality
One or more Directives, as appropriate, may apply to our products, in particular:
- The Low Voltage Directive 72/23/EEC amended by Directive 93/68/EEC: CE marking under the terms of this Directive is compulsory as of 1 January 1997.
- The Electromagnetic Compatibility Directive 89/336/EEC, amended by Directives 92/31/EEC and 93/68/EEC: CE marking on the products covered by this Directive has been compulsory since 1 January 1996.

The system designer must use devices external to the SCADA to protect against active faults, which are not indicated and are judged to be dangerous to the application.
This may require solutions from various different technologies such as mechanical, electromechanical, pneumatic or hydraulic devices (for example, directly wiring a limit switch and emergency stop switches to the coil of a movement control contactor).

Product Reference Index

043509383. 53
043509383. 77
110XCA20300 70
110XCA20300 77
110XCA20400 70
110XCA20400 77
110XCA28201 70
110XCA28201 77
110XCA28202 70
110XCA28202 77
110XCA28203 70
110XCA28203 77
170. 95
170AAI03000 34
170AAI03000 96
170AAI03000C 95
170AAI14000 34
170AAI14000 96
170AAI14000C 95
170AAI52040 34
170AAI52040C 95
170AAO12000. . . . 34
170AAO92100 34
170AAO92100C. . . . 95
170ADI34000 19
170ADI34000 96
170ADI34000C 95
170ADI35000 19
170ADI35000 96
170ADI35000C 95
170ADI54050 19
170ADI74050 19
170ADM35010 19
170ADM35010 96
170ADM35010C . . . 95
170ADM35011 19
170ADM35011 96
170ADM35015 19
170ADM35015 96
170ADM37010 19
170ADM37010 96
170ADM37010C . . . 95
170ADM39010 19
170ADM39010 96
170ADM39030 19
170ADM39030 96
170ADM39030C . . . 95
170ADM54080 42
170ADM54080 96
170ADM69051 19
170ADM85010 19
170ADM85010 96
170ADO34000 19
170ADO34000 96
170ADO34000C . . . 95
170ADO35000 19
170ADO35000 96
170ADO35000C . . . 95
170ADO53050 19
170ADO54050 19
170ADO73050 19
170ADO74050 19
170ADO83030 19
170ADO83030 96
170AEC92000 42
170AEC92000 96
170AMM09000 34
170AMM09000 96
170AMM09000C. . . . 95
170AMM09001 34
170AMM09001 96
170ANR12090 34
170ANR12090 96
170ANR12091 34
170ANR12091 96
170ARM37030 19
170ARM37030 96
170BDM09000 19
170BDM09000 35
170BNO67101 57
170BSM01600 19
170CPS11100 71
170DNT11000 59
170ENT11001 49
170ENT11001 96
170ENT11002 49
170ENT11002 96
170FNT11000. 55
170FNT11001. 55
170FNT11001. 96
170INT11000 57
170INT11003 57
170INT11003 96
170INT12000 57
170LNT71000. 61
170MCI00700. 57
170MCI02010. 77
170MCI02036. 77
170MCI02080. 77
170MCI02110. 53
170MCI02120. 53
170MCI02120. 77
170MCI02136. 53
170MCI02180. 53
170MCI02180. 77
170MCI04110. 77
170MCI10001. 57
170NEF11021 53
170NEF16021 53
170PNT11020 53
170PNT16020 53
170XCP10000 57
170XCP20000 19
170XCP20000 35
170XTS00100. 19
170XTS00100. 35
170XTS00200. 19
170XTS00200. 35
170XTS00301. 19
170XTS00301. 35
170XTS00401. 19
170XTS00401. 35
170XTS00501. 19
170XTS00501. 35
170XTS00601. 19
170XTS00601. 35
170XTS00701. 19
170XTS00701. 35
170XTS00801. 19
170XTS00801. 35
170XTS00900. 57
170XTS01100. 71
170XTS01200. 71
170XTS02000. 53
170XTS02000. 77
170XTS02100. 53
170XTS02100. 70
170XTS02100. 77
170XTS02200. 77
170XTS04000. 70
170XTS04000. 77
170XTS04100. 77
170XTS04200. 77
170XTS06000. 61
170XTS10000. 19
170XTS10000. 35
170XTS10000. 42
170XTS10000. 59
170XTS10000. 61
170XTS12000. . . . 19
171CCC76010. 70
171CCC76010. 96
171CCC76010C . . . 95
171CCC78010. 70
171CCC78010. . . . 96
171CCC96020. 70
171CCC96020. 96
171CCC96020C . . . 95
171CCC96030. 70
171CCC96030. 96
171CCC96030C . . . 95
171CCC98020. 70
171CCC98020. 96
171CCC98030. 70
171CCC98030. 96
171CCS70000. 70
171CCS70000. 96
171CCS70010. 70
171CCS70010. . . . 96
171CCS76000. 70
171CCS76000. 96
171CCS76000C . . 95
171CCS78000. 70
171CCS78000. 96
172JNN21032 77
172JNN21032 96
172JNN21032C. . . . 95
172PNN21022. 77
172PNN21022. 96
172PNN21022C . . 95
172PNN26022. 77
172PNN26022. 96
332SPU47001V26. . 89
372ESS47101 89
372ESS47101 89
372ESS47201 89
372ESS47400 89
372ESS47401 89
372ESS47403 89
372ESS47410 89
372ESS48501 89
372HVA16030V25. . 89
372SPU47101V26. . 89
372SPU47201V26. . 89
372SPU47401V26. . 89
372SPU47411V26. . 89
372SPU47421V26. . 89
372SPU47431V26. . 89
372SPU47701V26. . 89
372SPU71001PLDV 93
372SPU71001PLTE. 93
372SPU71001PLTH. 93
372SPU78001DMAN . 93
372SPU78001EMAN . 93
372SPU78001FMAN . 93
372SPU78001PDEV 93
372SPU78001PSEV 93
372SPU78001PSSV 93
372SPU78001PSTE 93
372SPU78001PSTH 93
372SPU78001SITE . 93
372SPU78001SMAN . 93
372SPU78101PONL 93
372SPU78401LPTE. 93
372SPU78401LPTH 93
372SPU78401LPUP 93
372SPU78401SEAT 93
424244739. 70
424244739. 77
490NAA27101 53
490NAA27101 77
490NAA27102 53
490NAA27102 . . . 77
490NAA27103 53
490NAA27103 77
490NAA27104 53
490NAA27104 77
490NAA27106 . . . 53
490NAA27106 77
490NAB00010 53
490NAD91103 59
490NAD91104 59
490NAD91105 59
490NOC00005. . . 83
490NOR00003. . . . 83
490NOR00005. . . . 83
490NOR00015. . . . 83
490NOT00005 83
490NTC00005 83
490NTC00005U . . . 83
490NTC00015 83
490NTC00015U . . . 83
490NTC00040 83
490NTC00040U . . . 83
490NTC00080 83
490NTC00080U . . . 83
490NTW00002. . . . 83
490NTW00002U . . 83
490NTW00005. . . . 83
490NTW00005U . . 83
490NTW00012. . . . 83
490NTW00012U . . 83
490NTW00040. . . . 83
490NTW00040U . . 83
490NTW00080 . . . 83
490NTW00080U . . 83
490USE13300 97
490USE13301 97
490USE13302 97
490USE13303 97
499NEH10410 78
499NEH14100 78
499NES18100. 81
499NES25100. . . . 80
499NES27100. 81
499NMS25101 80
499NMS25102 80
499NOH10510 78
499NOS27100 81
499NSS25101. 80
499NSS25102. 80
499NSS27100. 81
499NTR10010. 79
499NTR10100. 79
840USE11300. 97
840USE4920p. 89
840USE4930p. 89
840USE4940p. 89
840USE49501. 89
840USE4960p. 89
870USE00200. 42
870USE00200. 97
870USE00201. 97
870USE00202. 97
870USE00203. 97
870USE00300. 97
870USE00301. 97
870USE00400. 97
870USE00401. . . . 97
870USE00402. 97
870USE00500. 97
870USE00501. 97
870USE00502. 97
870USE00503. 97
870USE00800. 42
870USE00800. 97
870USE00801. 97
870USE00802. 97
870USE01000. 97
870USE01001. 97
870USE01002. 97
870USE01003. 97
870USE10110. 97
870USE10111. 97
870USE10112. 97
870USE10113. 97
870USE10300. 97
870USE10301. 97
870USE10302. 97
870USE10400. 97
870USE10500. 97
870USE10501. 97
870USE10502. 97
870USE10503. 97
870USE11100. 97
870USE11400. 97
870USE11401. 97
870USE11402. 97
870USE11403. 97
890USE10000. . . . 97
890USE10001. 97
890USE10002. . . . 97
890USE10003. 97
890USE10300. 97
900NAD21110 77

990NAD21110 53
990NAD21130 53
990NAD21130 77
990NAD21810 53
990NAD21830 53
990NAD21910 53
990NAD21930 53
990NAD23000 53
990NAD23000 77
990NAD23010 53
990NAD23010 77
990NAD23011 53
990NAD23011 77
990NAD23020 53
990NAD23021 53
990NAD23022 53
ASMBKT085..... 53
ASMBKT085..... 77
ASMBKT185..... 77
CER001 19
CER001 35
KAB3225LI..... 57
KABPROFIB..... 59
TCSESU051F0.... 82
TSXDRFIPE..... 97
TSXDRFIPF..... 97
TSXDRFIPG..... 97
TSXDRFIPS..... 97
TSXFPACC12 55
TSXFPACC14 55
TSXFPACC2 55
TSXFPACC4 55
TSXFPCC100..... 55
TSXFPCC200..... 55
TSXFPCC500..... 55
TSXIBSCA100 57
TSXIBSCA400 57
TSXPBSCA100 ... 59
TSXPBSCA400 ... 59
XZCC12FCM50B .. 82
XZCC12FDM50 ... 82
XZCP1164L 82
XZCP1264L 82

Schneider Electric Industries SAS

Headquarters

89, bd Franklin Roosevelt
F - 92506 Rueil Malmaison Cedex

http://www.schneider-electric.com

Owing to changes in standards and equipment, the characteristics given in the text and images in this document are not binding until they have been confirmed with us.

Production : Schneider Electric Industries
Photos : Schneider Electric Industries
Printed by

MKTED205061EN

August 2005

Product data sheet
Characteristics

170AAI03000

distributed analog input Modicon Momentum - 8 I differential

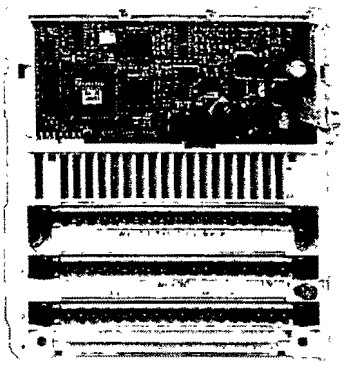

Main

Range of product	Modicon Momentum automation platform
Product or component type	Analogue input base
Analogue input number	8
Analogue input type	Differentials
Analogue input range	1...5 V , resolution 15 bits + sign , input impedance > 0.1 kOhm 4...20 mA , resolution 15 bits + sign , input impedance. 250 kOhm +/- 10 V , resolution 14 bits + sign , input impedance > 0.1 kOhm +/- 20 mA , resolution 14 bits + sign , input impedance: 250 kOhm +/- 5 V , resolution 14 bits + sign , input impedance: > 0.1 kOhm

Complementary

Data format	Full 16 bits signed
Absolute accuracy error	+/- 0.13 % full scale at 25 °C , for input range 1...5 V +/- 0.19 % full scale at 60 °C , for input range 1...5 V +/- 0.21 % full scale at 25 °C , for input range +/- 5 V +/- 0.26 % full scale at 60 °C , for input range +/- 5 V +/- 0.27 % full scale at 25 °C , for input range +/- 10 V +/- 0.27 % full scale at 25 °C , for input range 4...20 mA +/- 0.32 % full scale at 25 °C , for input range +/- 20 mA +/- 0.32 % full scale at 60 °C , for input range +/- 10 V +/- 0.38 % full scale at 60 °C , for input range. 4...20 mA +/- 0.41 % full scale at 60 °C , for input range: +/- 20 mA
Conversion time	≤ 12 ms on 8input channel(s)
Isolation between channels	+/- 200 V DC for 1 minute
Isolation between channels and ground	500 V AC for 1 minute
Isolation between channels and bus	500 V AC for 1 minute
Permissible common mode voltage	100 V at DC 47. .63 Hz , between channels to ground 250 V at AC 47...63 Hz , between channels to ground
Common mode rejection	≥ 80 dB between channels to ground
External power requirement	20 4 . 28.8 V DC 24 V DC < 382 mA DC
Reverse polarity protection	Internal
Marking	CE
Local signalling	1 LED green (ready) 8 LEDs (channel status)
Electrical connection	2 connectors for removable terminal blocks
Product weight	0 215 kg

Environment

Standards	EN 50081-2 IEC 1131
Product certifications	CSA FM Class 1 Division 2 UL
Protective treatment	TC
Resistance to electrostatic discharge	4 kV contact conforming to IEC 801-2 8 kV on air conforming to IEC 801-2
Resistance to electromagnetic fields	10 V/m 80...1000 MHz conforming to IEC 801-3

The information provided in this documentation contains general descriptions and/or technical characteristics of the performance of the products contained herein
This documentation is not intended as a substitute for and is not to be used for determining suitability or reliability of these products for specific user applications.
It is the duty of any such user or integrator to perform the appropriate and complete risk analysis, evaluation and testing of the products with respect to the relevant specific application or use thereof
Neither Schneider Electric Industries SAS nor any of its affiliates or subsidiaries shall be responsible or liable for misuse of the information contained herein

Ambient air temperature for operation	0.. 60 °C
Ambient air temperature for storage	-40 .85 °C
Relative humidity	95 % without condensation
Operating altitude	≤ 5000 m
RoHS EUR conformity date	1Q2010
RoHS EUR status	Will be compliant

Product data sheet
Characteristics

170AAO92100

distributed analog output Modicon Momentum - 4 O - 4..20 mA

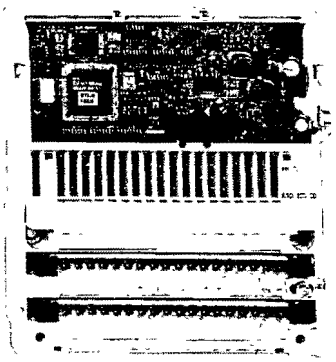

Main

Range of product	Modicon Momentum automation platform
Product or component type	Analogue output base

Complementary

Analogue output number	4
Data format	Full 16 bits signed
Analogue output range	4...20 mA , resolution. 12 bits + sign , load impedance ≤ 0 6 kOhm +/- 10 V , resolution 12 bits + sign , load impedance. ≥ 1 kOhm
Load capacitance	< 1 µF
Absolute accuracy error	+/- 0.2 % of full scale for output range. +/- 10 V at 25 °C +/- 0 25 % full scale for output range. +/- 10 V at 60 °C +/- 0.4 % of full scale for output range: 4...20 mA at 25 °C +/- 0.5 % of full scale for output range: 4...20 mA at 60 °C
Temperature drift	10 %oFS/°C for output range +/- 10 V at 60 °C 30 %oFS/°C for output range 4...20 mA at 60 °C
Update time	< 2 ms
Full scale	2 mA for output range 4.. 20 mA 10 V for output range: +/- 10 V
Fail state	Hold Reset to full scale Reset to zero
Isolation between channels and ground	500 V AC for 1 minute
Power dissipation in W	≤ 8.5 W
Protection type	Internal 2 A slow-blow
Output short-circuit protection	With in voltage circuit
External power requirement	24 V DC +/- 30 V DC
Permissible common mode voltage	250 V at 47...63 Hz AC between channels to ground 250 V at 47...63 Hz DC
Reverse polarity protection	Internal
Marking	CE
Local signalling	4 LED channel status
Current consumption	150 mA at 24 V DC actuator 530 mA at 24 V DC base
Module format	Standard
Product weight	0.215 kg

The information provided in this documentation contains general descriptions and/or technical characteristics of the performance of the products contained herein.
This documentation is not intended as a substitute for and is not to be used for determining suitability or reliability of these products for specific user applications
It is the duty of any such user or integrator to perform the appropriate and complete risk analysis, evaluation and testing of the products with respect to the relevant specific application or use thereof.
Neither Schneider Electric Industries SAS nor any of its affiliates or subsidiaries shall be responsible or liable for misuse of the information contained herein.

Environment

Product certifications	CSA UL
Protective treatment	TC
Resistance to electrostatic discharge	4 kV contact conforming to IEC 801-2 8 kV on air conforming to IEC 801-2
Resistance to electromagnetic fields	10 V/m 80 ..1000 MHz conforming to IEC 801-3
Ambient air temperature for operation	0.. 60 °C
Ambient air temperature for storage	-40. .85 °C
Relative humidity	95 % without condensation
Operating altitude	≤ 5000 m
RoHS EUR conformity date	1Q2010
RoHS EUR status	Will be compliant

Product data sheet
Characteristics

170ADI54050

discrete input module Modicon Momentum - standard format - 16 I 100..120 V AC

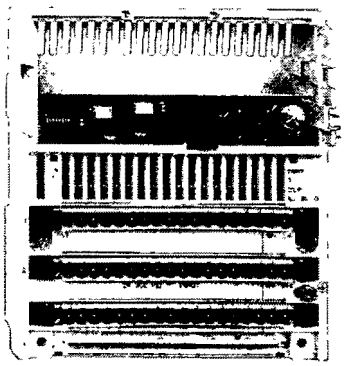

Main

Range of product	Modicon Momentum automation platform
Product or component type	Discrete inputs base AC
Group of channels	2 groups of 8 inputs
Discrete input number	16 conforming to IEC 1131-2 Type 2
Discrete input voltage	120 V AC
Protective treatment	TC

Complementary

Discrete input logic	Positive
Input voltage limits	85...132 V
Network frequency	47...63 Hz
Voltage range	0. 132 V
Voltage state 0 guaranteed	≤ 20 V
Voltage state 1 guaranteed	≥ 74 V
Current state 0 guaranteed	≤ 2 mA
Current state 1 guaranteed	≥ 10 mA
Input resistance	7.5 kOhm at 60 Hz 9.5 kOhm at 50 Hz
Response time	10 ms at 60 Hz from state 0 to state 1 35 ms at 60 Hz from state 1 to state 0
Isolation between group	1780 V AC
Isolation between channels and bus	1780 V AC
Marking	CE
Local signalling	16 LEDs (channel status)
Current consumption	≤ 125 mA at 120 V AC
Product weight	0.284 kg

Environment

Product certifications	CSA FM Class 1 Division 2 UL
Resistance to electrostatic discharge	4 kV contact conforming to IEC 801-2 8 kV on air conforming to IEC 801-2
Resistance to electromagnetic fields	10 V/m 80.. 1000 MHz conforming to IEC 801-3
Ambient air temperature for operation	0.. 60 °C
Ambient air temperature for storage	-40...85 °C
Relative humidity	95 % without condensation
Operating altitude	≤ 5000 m
RoHS EUR conformity date	1Q2010
RoHS EUR status	Will be compliant

The information provided in this documentation contains general descriptions and/or technical characteristics of the performance of the products contained herein.
This documentation is not intended as a substitute for and is not to be used for determining suitability or reliability of these products for specific user applications.
It is the duty of any such user or integrator to perform the appropriate and complete risk analysis, evaluation and testing of the products with respect to the relevant specific application or use thereof.
Neither Schneider Electric Industries SAS nor any of its affiliates or subsidiaries shall be responsible or liable for misuse of the information contained herein.

Product data sheet
Characteristics

170ADO74050

discrete output module Modicon Momentum - 16 O solid state

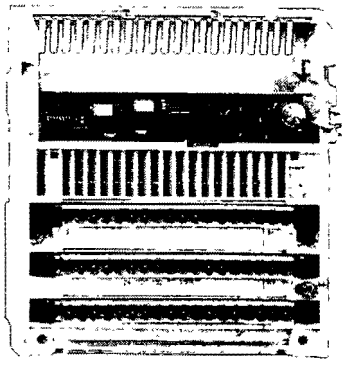

Main

Range of product	Modicon Momentum automation platform
Product or component type	Discrete output base AC
Group of channels	2 groups of 8 outputs
Discrete output number	16
Discrete output type	Tnac
Output voltage	230 V AC
Current per channel	≤ 0.5 A
Short-circuit protection	Internal fuse, 5 A slow-blow per group
Protective treatment	TC

Complementary

[Ue] rated operational voltage	230 V AC
Discrete output current	4 A per group 8 A per module
Minimum output current	30 mA
Leakage current	2.4 mA at 230 V AC
Surge current	5 A for 3 cycles 10 A for 2 cycles 15 A for 1 cycle
Voltage drop	< 1.5 V at 0.5 A at state 1
Output overload protection	Internal fuse
Response time	1/2 x 1/f (= 0.5 of one line cycle) from state 0 to state 1 1/2 x 1/f (= 0.5 of one line cycle) from state 1 to state 0
Isolation between channels and bus	1780 V AC for 1 minute
Power dissipation	6 W typical 7.5 W maximum
Marking	CE
Local signalling	16 LEDs (channel status)
Current consumption	65 mA at 230 V AC
Product weight	0.284 kg

Environment

Product certifications	CSA FM Class 1 Division 2 UL
Resistance to electrostatic discharge	4 kV contact conforming to IEC 801-2 8 kV on air conforming to IEC 801-2
Resistance to electromagnetic fields	10 V/m 80...1000 MHz conforming to IEC 801-3
Ambient air temperature for operation	0...60 °C
Ambient air temperature for storage	-40...85 °C
Relative humidity	95 % without condensation
Operating altitude	≤ 5000 m
RoHS EUR conformity date	1Q2010
RoHS EUR status	Will be compliant

The information provided in this documentation contains general descriptions and/or technical characteristics of the performance of the products contained herein
This documentation is not intended as a substitute for and is not to be used for determining suitability or reliability of these products for specific user applications
It is the duty of any such user or integrator to perform the appropriate and complete risk analysis, evaluation and testing of the products with respect to the relevant specific application or use thereof
Neither Schneider Electric Industries SAS nor any of its affiliates or subsidiaries shall be responsible or liable for misuse of the information contained herein

Product data sheet
Characteristics

171CCC96030

M1/M1E processor adaptor - flash capacity 1 MB - 1 Ethernet , 1 I/O bus

Product identification

Range of product	Modicon Momentum automation platform
Product or component type	M1/M1E processor adaptor
Software designation	Concept V2.6 Modsoft >= V2.5 ProWORX 32 ProWORX NxT V2.0
Processor name	X 86 based (INTEL, AMD) IEC executive

Connections

Ethernet service	I/O scanning Modbus TCP messaging

Electrical

[Us] rated supply voltage	5.0 V DC (+/-5 %)
Supply	By Momentum I/O base

Communication

Web services	Data editor Rack viewer Web page loader Web page loader software tool
Communication port protocol	Ethernet
Discrete I/O processor capacity	8192 I/8192 O
Register I/O processor capacity	26048 I/26048 O
Number of port	1 Ethernet 1 I/O bus

Functional

Concept	Transparent Ready
Clock frequency	50 MHz
Exact time for 1 K instruction	1 ms
Memory type	RAM , capacity 544 kB Flash , capacity 1 MB
Memory description	Data , capacity 24 kB Program memory , capacity. 18 kB , LL984 Program memory , capacity 200 kB , IEC
I/O limit processor capacity	8192 bits max
I/O words/drop	80 I/O for ProWORX 128 I/O for Concept
Marking	CE

Physical characteristics

Material	Lexan
Word length	16 bit
Product weight	0.042 kg

The information provided in this documentation contains general descriptions and/or technical characteristics of the performance of the products contained herein.
This documentation is not intended as a substitute for and is not to be used for determining suitability or reliability of these products for specific user applications.
It is the duty of any such user or integrator to perform the appropriate and complete risk analysis, evaluation and testing of the products with respect to the relevant specific application or use thereof.
Neither Schneider Electric Industries SAS nor any of its affiliates or subsidiaries shall be responsible or liable for misuse of the information contained herein.

Certifications and standards

Product certifications	FM Class 1 Division 2 Nema type 250 UL CUL

Environment

Class	Class B10
Protective treatment	TC
Ambient air temperature for operation	0...60 °C
Ambient air temperature for storage	-40 .85 °C
Relative humidity	5...96 % without condensation
Operating altitude	2000 m
Shock resistance	<= 15 gn peak for 11 ms half sine wave
Vibration resistance	0.75 mm d.a 1 gn

Product data sheet
Characteristics

170INT11000

Interbus communication adaptor - Interbus generation SUPI 2 - twisted pair

Main

Range of product	Modicon Momentum automation platform
Product or component type	Interbus communication adaptor
Communication port protocol	Interbus generation SUPI 2
Method of access	Continuous shift register Master/Slave
Transmission rate	500 kbit/s
Transmission support medium	Twisted pair

Complementary

Topology	Ring
Number of devices	0...254
Cable length	≤ 12800 m ≤ 400 m between two modules
Fail state	Fail safe
Control parameter	CRC-16
Supply	From I/O base
Marking	CE
Local signalling	1 LED green bus enable (BA) 1 LED green remote bus check (RC) 1 LED green remote bus disabled (RD)
Electrical connection	2 connectors SUB-D 9 for connecting Interbus
Module format	Standard
Product weight	0.07 kg

Environment

Product certifications	CSA FM Class 1 Division 2 UL
IP degree of protection	IP20
Protective treatment	TC
Resistance to electrostatic discharge	4 kV contact conforming to IEC 801-2 8 kV on air conforming to IEC 801-2
Resistance to electromagnetic fields	10 V/m 80...1000 MHz conforming to IEC 801-3
Ambient air temperature for operation	0 ..60 °C
Ambient air temperature for storage	-40...85 °C
Relative humidity	95 % without condensation
Operating altitude	≤ 5000 m
RoHS EUR conformity date	1Q2010
RoHS EUR status	Will be compliant

The information provided in this documentation contains general descriptions and/or technical characteristics of the performance of the products contained herein.
This documentation is not intended as a substitute for and is not to be used for determining suitability or reliability of these products for specific user applications.
It is the duty of any such user or integrator to perform the appropriate and complete risk analysis, evaluation and testing of the products with respect to the relevant specific application or use thereof.
Neither Schneider Electric Industries SAS nor any of its affiliates or subsidiaries shall be responsible or liable for misuse of the information contained herein.

Product data sheet
Characteristics

172JNN21032

Modicon Momentum - serial link option adaptor - single

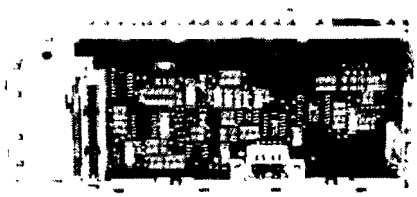

Main

Range of product	Modicon Momentum automation platform
Product or component type	Serial link option adaptor
Number of port	1
Communication port type	Single

Complementary

[Us] rated supply voltage	5 V DC
Input voltage tolerance	+/- 5 %
Supply	Via I/O base
Clock drift	+/- 13 s/day accuracy
Battery type	Lithium , service life < 30 day after the battery low indication , 40 °C
Battery size	2/3 AA
Battery life	5 yr
Communication port support	RS232 or RS485 serial link selectable
Electrical connection	1 connector D-shell 9 pins for Modbus Plus connection
Material	Lexan
Marking	CE
Local signalling	1 LED (communication)
Current consumption	700 mA at 12 V DC
Height	25 mm
Width	143.1 mm
Depth	60.06 mm
Module format	Standard
Product weight	85 05 g

Environment

Dielectric strength	500 V DC
Standards	IEC 529
Product certifications	CSA NEMA 250 type 1 UL
IP degree of protection	IP20 conforming to IEC 529
Protective treatment	TC Conformal coating Humiseal 1A33
Shock resistance	+/- 15 gn for 11 ms half sine wave
Vibration resistance	1 gn (f = 57. .150 Hz)
Amplitude of sinusoidal vibration	0.075 mm , 10.. 57 Hz
Resistance to electrostatic discharge	8 kV on air conforming to IEC 801-2
Resistance to electromagnetic fields	10 V/m 80...1000 MHz conforming to IEC 801-3
Ambient air temperature for operation	0. 60 °C
Ambient air temperature for storage	-40...85 °C

The information provided in this documentation contains general descriptions and/or technical characteristics of the performance of the products contained herein
This documentation is not intended as a substitute for and is not to be used for determining suitability or reliability of these products for specific user applications.
It is the duty of any such user or integrator to perform the appropriate and complete risk analysis, evaluation and testing of the products with respect to the relevant specific application or use thereof
Neither Schneider Electric Industries SAS nor any of its affiliates or subsidiaries shall be responsible or liable for misuse of the information contained herein.

Relative humidity	5...95 % without condensation
Operating altitude	≤ 2000 m
RoHS EUR conformity date	0826
RoHS EUR status	Compliant

Automation software

Concept V2.6

The *flexible* IEC 61131-3 development environment to *optimize* PLC performance

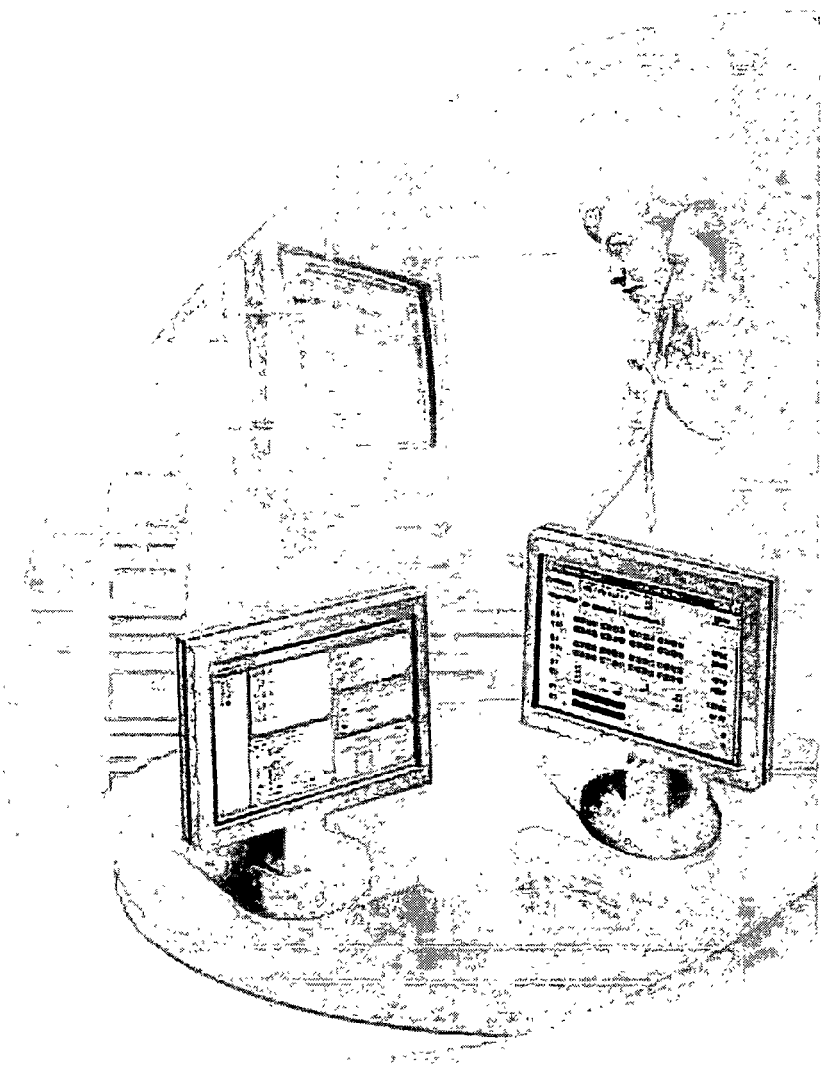

a brand of Schneider Electric

Telemecanique

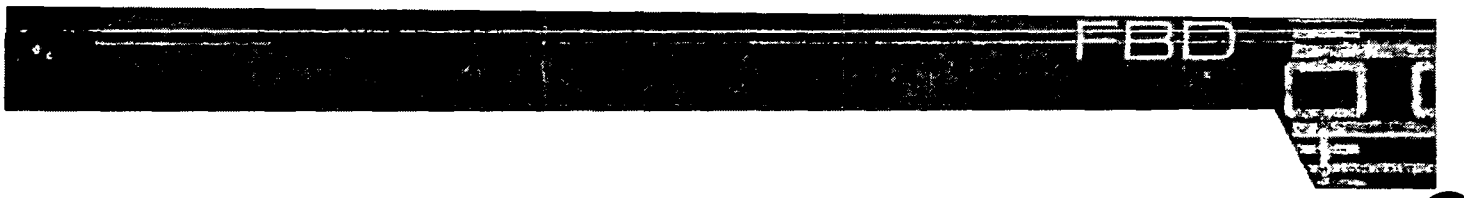

Simply Smart !
Leveraging
ingenuity
and intelligence
for **ease of use.**

Programming software

that **unlocks** the benefits of **integrated** automation **solutions**

Concept v2.6 is the *flexible* IEC 61131-3 programming software specifically designed to deliver optimal performance and *ease* of use from your Modicon Quantum, Momentum, and Compact controllers.

Concept v2.6 is simply the smart choice

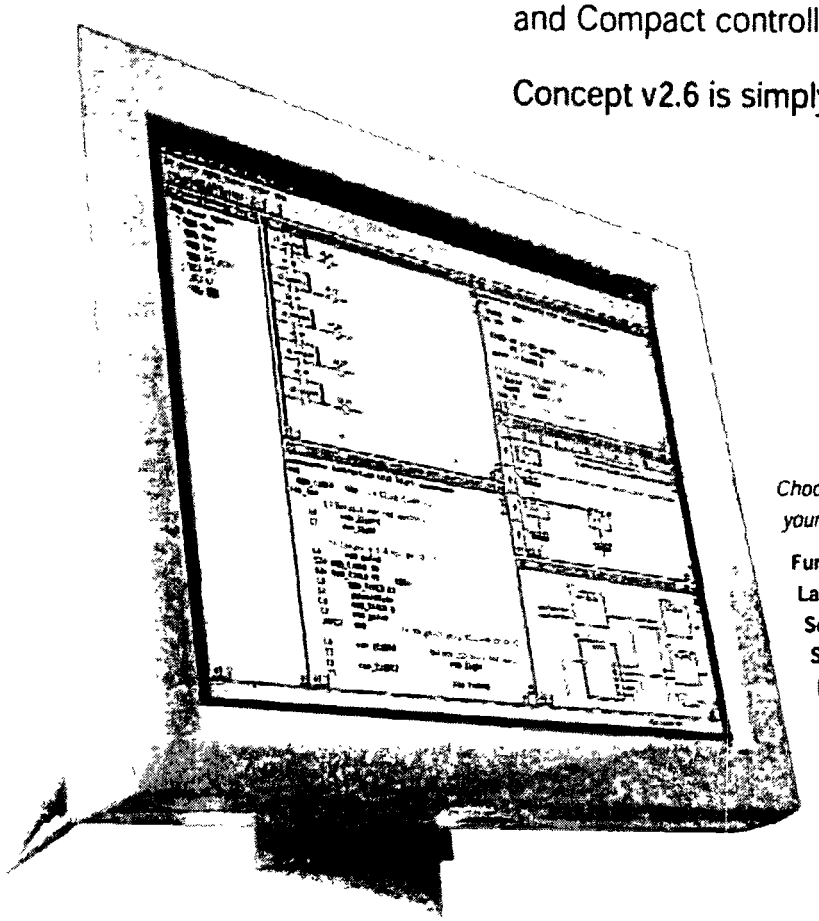

Choose the environment that best suits your application and your engineering expertise.

Function Block Diagram (FBD)
Ladder Diagram (LD)
Sequential Function Chart (SFC)
Structured Text (ST)
Instruction List (IL)

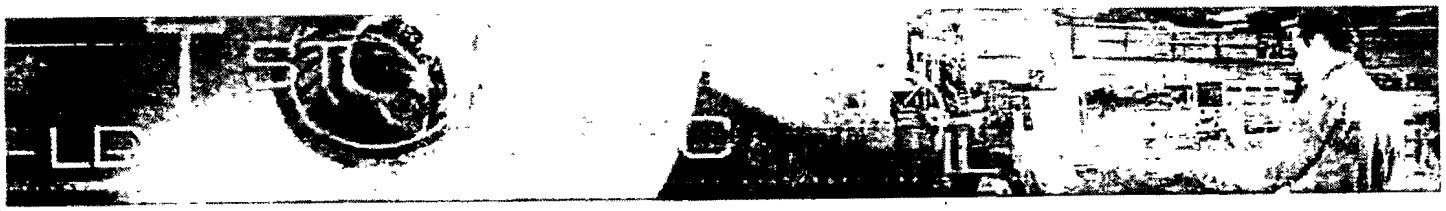

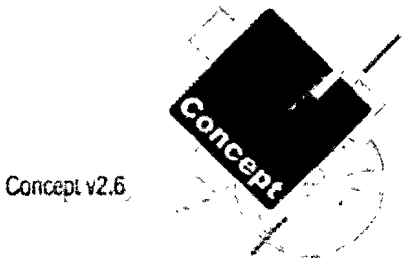

Concept v2.6

Compact

Momentum

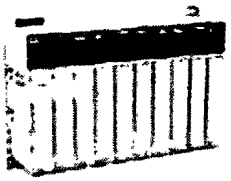

Quantum

One application, custom features

Schneider Electric's Concept software provides users with an advanced Microsoft Windows based toolset that delivers a multilanguage development environment for control system programming.

Process productivity

Concept's five IEC editors are the main tools on the integrated programming palette that give users the freedom to choose the programming language that fits their application requirements. Schneider's IEC software utilizes structured programming to optimize variable usage as well as reduce software design time and maintenance costs.

Multi-level password protection

Concept provides up to nine levels of software access through easy-to-use configuration screens. This delivers the flexibility to assign multiple levels of password security, and reduces the chance for unauthorized changes to projects or DFBs.

Smart features for improved productivity

Simple

Upload IEC programs

Users can simply turn on a preference in the code generation menu to include upload information and Concept will store your IEC program and all the tag names in the PLC. This enables the transfer of previously loaded Concept IEC programs from the PLC to the programming device.

As an additional feature, Concept offers the unique option to store your variable and section comments in the PLC.

Using familiar, standardized editors bundled in a single application, users can create and integrate PLC control, communication and diagnostic logic.

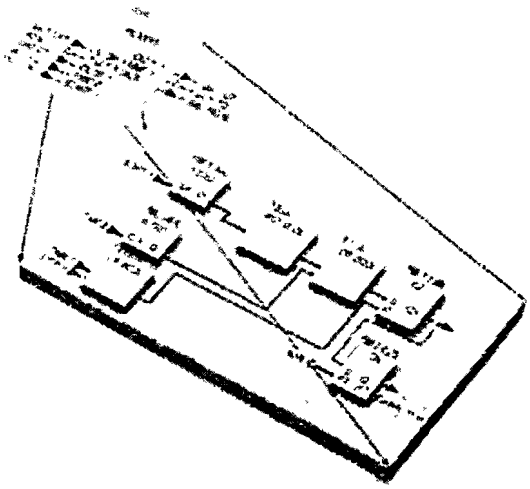

Ingenious

Reuse objects

Concept's multi-language development environment enables programmers to create standard libraries of Derived Function Blocks (DFBs). Concept allows multiple instances of DFBs in an application program. These DFBs can be written in Ladder Diagram, Function Block Diagram, Structured Text or Instruction List languages. If a particular algorithm or standard piece of control logic needs to be modified, the change is performed once and Concept automatically performs any modifications for each copy of the DFB.

Export and import

To meet customer needs for streamlined programming, Concept offers macros that duplicate frequently used code segments or sections with modified variable names. Users can export/import complete projects, sections, variable list, or configuration information from/to other Concept applications.

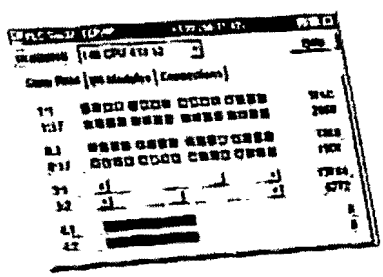

Simulate first, install second

Schneider's testing and diagnostic simulation tools help users achieve significantly faster results in every phase of application development from specification to implementation.

Security

Once up and running, Hot Standby solutions manage automatic, instantaneous switching from the main CPU to a secondary CPU. The Hot-Standby functionality available on Schneider's Quantum platform is an integrated part of Concept and does not require any special programming.

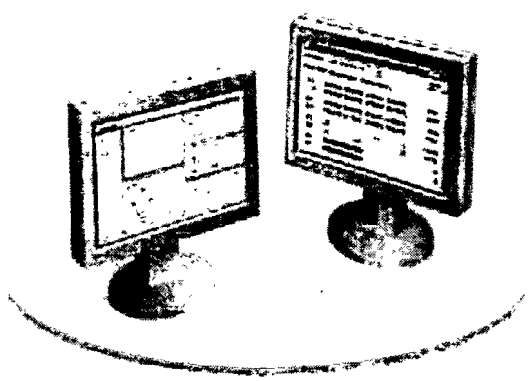

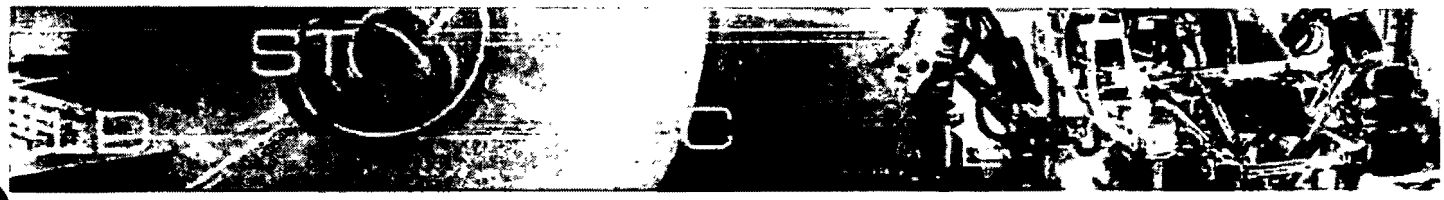

Open

Broad-based industry acceptance of IEC 61131-3 means users have a common set of languages to work with that act as a foundation. This common foundation delivers optimal flexibility between programs as well as the interoperability to work between vendors.

Data mining

Concept's performance features are significantly enhanced by the high level of compatibility it has with other Schneider products. Example – Users can access Concept tag names via Schneider Electric's OPC Factory Server (OFS). The OFS tool provides direct database access to all Concept variables – located and unlocated, elementary and structured, and displays them as OPC objects. This means any OPC Client (e.g. VisualBasic) has easy online read/write control of critical PLC data. Access to this kind of data makes Concept a crucial component in HMI, SCADA, MES, and ERP systems.

Subscription Service (formerly CSP)

With your purchase of Concept v2.6, you will automatically receive free software updates for a full year, giving you the latest Concept revisions to keep your software at its highest productivity. Software registration required to activate the service.

Flexibility for a wide range of industries and applications

Its flexibility and high level of performance make Concept v2.6 especially well suited for a wide variety of applications. Combined with the power of Quantum it is the ideal solution for process control solutions in Food & Beverage, Oil & Gas, and Pharmaceutical, and the distributed intelligence and distributed I/O capabilities of Momentum are ideal for many different kinds of discrete manufacturing and conveying applications

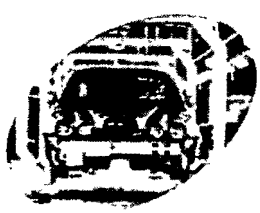

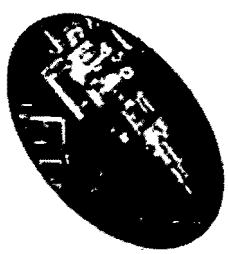

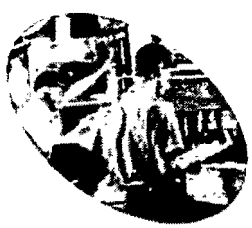

Smart solutions for your Quantum-based pharmaceutical and food & beverage solutions

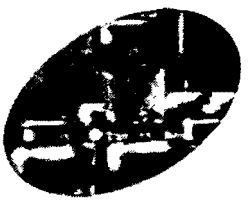

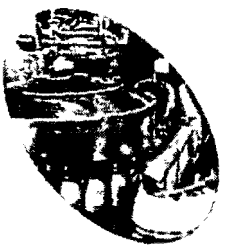

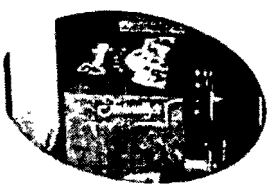

Enhanced security to support 21 CFR part 11 systems

As the demands for control and documentation from regulatory agencies become more stringent, Concept v2.6 offers important new features that will allow users in the pharmaceutical and food & beverage industries to design and operate a Modicon Quantum control system that complies with 21 CFR part 11 (434A and 534A controllers only).

- *Password Dialog* for enhanced operational security
- *Write Restriction List* distinguishes Modbus Plus addresses that have only "Read" access from those that have "Write" access.
- *Auto-Logout* allows setting a variable Auto-Logout time in the Quantum controller when no activity takes place for a specified period of time (ex. "download," "download change," etc.). After the connection has been reset a user must reconnect to the Quantum controller.
- *Log-File Encryption* allows automatic encryption of the log-file.
- *Secure Application Flag* for each separate project which indicates that logging and log-file encryption is automatically enabled.

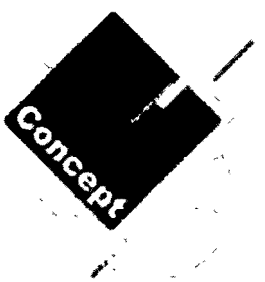

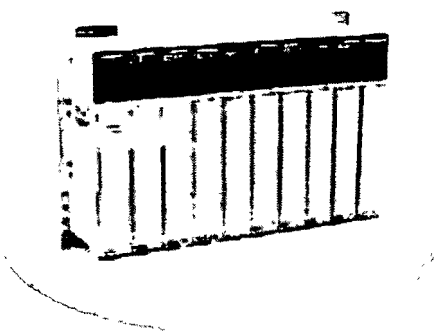

NOTE 1: In most cases the executive of Quantum 434A/534A controllers must be upgraded to the latest version to benefit from these new features.

NOTE 2: Use of Concept v2.6 does not inherently imply compliance with CFR 21 11. For complete details, please refer to Schneider User Manual 840 USE 200 00 version 1.0 — Schneider Electric Security Features for 21 CFR Part 11 Compliance. You should also visit the FDA web site at http://www.fda.gov/ora/compliance_ref/part11/.

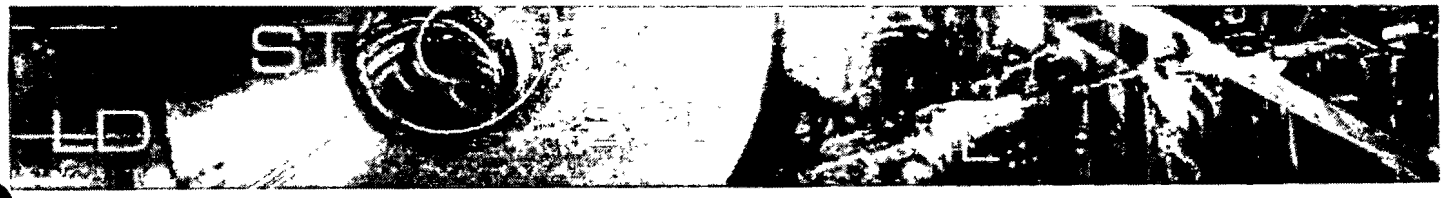

Product references and specifications

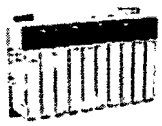

Supported PLC Platforms	Quantum	Momentum	Compact
	140 CPU 113 02	171 CCS 700 00	PC E984 258
	140 CPU 113 03	171 CCS 700 10	PC E984 265
	140 CPU 213 04	171 CCS 760 00	PC E984 275
	140 CPU 424 02	171 CCS 780 00	PC E984 285
	140 CPU 434 12	171 CCC 760 10	
	140 CPU 534 14	171 CCC 780 10	
	140 CPU 434 12 A	171 CCC 960 20	
	140 CPU 534 14 A	171 CCC 960 30	
	and derivatives thereof	171 CCC 980 20	
		171 CCC 980 30	
Operating Systems	Windows 98, Windows NT 4.0 SP5 or higher, Windows 2000 Professional, and Windows XP Professional		
Communications	Support of Modbus, Modbus Plus, and Modbus TCP (10/100 Mbit/s)		
IEC Language Editors	Free Graphic Editors:	Text Editors	
	Function Block Diagram (FBD) / PLCopen Base Level compliant,	Structured Text (ST) / PLCopen Base Level compliant	
	Sequential Function Chart (SFC)	Instruction List (IL) / PLCopen Base Level compliant	
	Ladder Diagram (LD)		
Non-IEC Language	984 Ladder Logic (984LL)		
Included Function Block Libraries	IEC (Arithmetic, Bistable, Compare, Converter, Counter, Edge detection, Logic, Numeric, Select, Timer)		
	EXTENDED (Arithmetic, Converter, ...)		
	SYSTEM (System based FFB library)		
	ANA_IO (Analog I/O, Configuration)		
	CONT_CTL (Closed Loop Control)		
	FUZZY (Fuzzy Logic)		
	DIAGNO (Process Diagnosis)		
	COMM (IEC Communication)		
	EXPERTS (FFB library for Expert Modules)		
	LIB984 (984 Ladder Logic FFB's)		
Basic Feature Set	Online help	Code encapsulation	
	Symbolic addressing	Online data visualization	
	Powerful search functions	Derived Function Blocks	
	Variable editor	Re-use of code/programs	
	Derived Data Types	Excellent documentation capabilities	
	Debugging support		
Security	Protection of Projects		
	Protection of Derived Function Blocks		
	Multiple levels of password protection are possible		
Product References	372SPU47101V26	Concept S	
	372SPU47201V26	Concept M	
	372SPU47401V26	Concept XL (Multi-user licenses available.)	
	372SPU47701V26	Concept Application Loader	
	Upon installation, the user can select one of the following languages: English, French, German, or Spanish		
Related products	332SPU47001V26	Concept EFB Toolkit (comes with a C-Compiler to allow the creation of customized EFBs. The newly created EFBs can be installed into Concept and used like all original EFBs (AND, OR, CTU, ...)	
	372HVA16030V25	HVAC Library 2.5 (an EFB library for common HVAC applications)	
	372SFV16000V30	SFC View 3.0 (an ActiveX control to display status information on an Operator Station concerning all SFC sections running in the PLC).	

The efficiency of Telemecanique branded *solutions*

Used in combination, Telemecanique products provide quality solutions, meeting all your Automation & Control applications requirements.

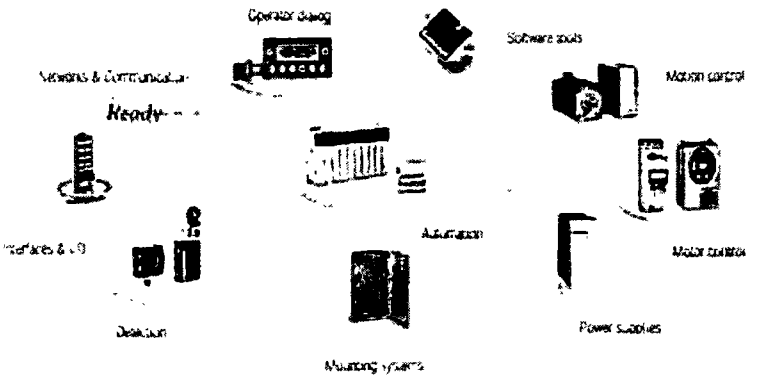

A worldwide presence

Constantly available

- More than 5 000 points of sale in 130 countries.
- You can be sure to find the range of products that are right for you and which complies fully with the standards in the country where they are used.

Technical assistance wherever you are

- Our technicians are at your disposal to assist you in finding the optimum solution for your particular needs.
- Schneider Electric provides you with all necessary technical assistance, throughout the world.

Schneider Electric Industries S.A.

Head Office
89, bd Franklin Roosevelt
92504 Rueil-Malmaison
FRANCE

www.schneider-electric.com
www.telemecanique.com

Simply Smart!

Due to evolution of standards and equipment the characteristics indicated in texts and images of this document do not constitute a commitment on our part without confirmation.

Design : www.clement.com
Photos : Schneider Electric

8000BR0401R11/04

11 / 2004

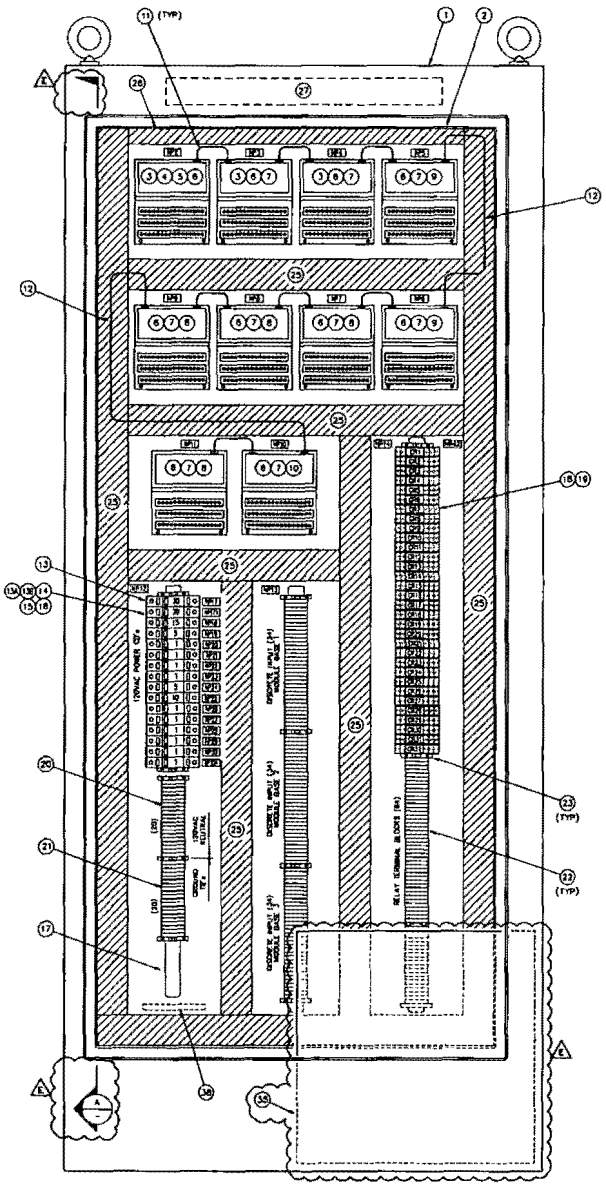

PANEL ENCLOSURE
(SHOWN WITH DOOR OPEN)

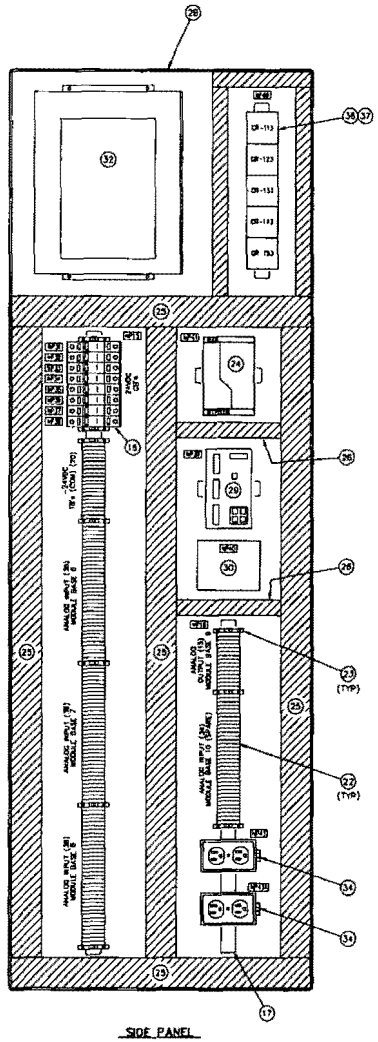

SIDE PANEL

SECTION A
1/4"=1"

BILL OF MATERIALS

ITEM	QTY	DESCRIPTION	MANUFACTURER	CATALOG NO	REMARKS
1	1	72.06"± 31.06" x 24.06" FREE STANDING TYPE 4 ENCLOSURE	HOFFMAN	A72H3124FSJPT	FABRICATOR
2	1	ENCLOSURE BACK PANEL, 60" x 28" (FULL PANEL)	HOFFMAN	A-72P30F1G	FABRICATOR
2A	1	ENCLOSURE SWING-OUT PANEL (HALF PANEL)	HOFFMAN	A72SP30F4	FABRICATOR
2B	1	SIDE MOUNTED PANEL 60" x 20"	HOFFMAN	A72SMP20	FABRICATOR
3	3	MOMENTUM DISCRETE INPUT MODULE BASE, 120VAC 16 POINT	MODICON	170ADI54050	FABRICATOR
4	1	MOMENTUM OPTION ADAPTER MODULE	MODICON	172JNN21032	FABRICATOR
5	1	MOMENTUM PROCESSOR ADAPTER 512K MEMORY	MODICON	171CCC98030-IEC	FABRICATOR
6	10	MOMENTUM SCREW-IN FIELD WIRING TERMINAL CONNECTOR	MODICON	170XTS00100	FABRICATOR
7	9	MOMENTUM INTERBUS COMMUNICATION ADAPTER	MODICON	170INT11000	FABRICATOR
8	4	MOMENTUM 8-CHANNEL ANALOG INPUT MODULE BASE	MODICON	170AAI03000	FABRICATOR
9	2	MOMENTUM DISCRETE OUTPUT MODULE BASE, 120VAC, 16 POINT	MODICON	170AD054050	FABRICATOR
10	1	MOMENTUM 4-CHANNEL ANALOG OUTPUT MODULE BASE	MODICON	170AAO92100	FABRICATOR
11	7	MOMENTUM INTERBUS COMMUNICATION CABLE (L=4 1/2")	MODICON	170MCI00700	FABRICATOR
12	2	MOMENTUM INTERBUS COMMUNICATION CABLE (L=39")	MODICON	170MCI10001	FABRICATOR
13	1	CIRCUIT BREAKER TERMINAL BLOCK, 30A	ALLEN-BRADLEY	1492-CB1G300	FABRICATOR
13A	1	CIRCUIT BREAKER TERMINAL BLOCK, 20A	ALLEN-BRADLEY	1492-CB1G200	FABRICATOR
13B	1	CIRCUIT BREAKER TERMINAL BLOCK, 15A	ALLEN-BRADLEY	1492-CB1G150	FABRICATOR
14	1	CIRCUIT BREAKER TERMINAL BLOCK 10A	ALLEN-BRADLEY	1492-CB1G100	FABRICATOR
15	2	CIRCUIT BREAKER TERMINAL BLOCK 5A	ALLEN-BRADLEY	1492-CB1G050	FABRICATOR
16	18	CIRCUIT BREAKER TERMINAL BLOCK 1A	ALLEN-BRADLEY	1492-CB1G010	FABRICATOR
17	LOT	MOUNTING RAIL, HI-RISE	ALLEN-BRADLEY	1492-DR6	FABRICATOR
18	32	CONTROL RELAY, 120VAC COIL, 2-FORM "C" CONTACTS, 10-AMP	ALLEN-BRADLEY	700-HK32A1	FABRICATOR
19	32	CONTROL RELAY SOCKET	ALLEN-BRADLEY	700-HN122	FABRICATOR
20	20	TERMINAL BLOCK 600V, 35A (120VAC - WHITE)	PHOENIX	UT 4-MTD	FABRICATOR
21	20	TERMINAL BLOCK, 600V, 35A (GROUND)	PHOENIX	USKG5	FABRICATOR
22	LOT	TERMINAL BLOCK, 600V 35A (120VAC - GRAY)	PHOENIX	UT 4-MTD	FABRICATOR
23	23	TERMINAL BLOCK END ANCHOR	PHOENIX	CLIPFIX	FABRICATOR
24	1	POWER SUPPLY 120VAC INPUT 24VDC OUTPUT 6.3A	IDEC	PS3E-F24F	FABRICATOR
25	LOT	2" x 3" WIREWAY WITH COVER, WHITE COLOR	PANDUIT	--	FABRICATOR
26	LOT	1" x 3" WIREWAY WITH COVER, WHITE COLOR	PANDUIT	--	FABRICATOR
27	1	120V FLUORESCENT LIGHTING PACKAGE W/ DOOR SWITCH	HOFFMAN	A-LF1801B	FABRICATOR
28	1	ENCLOSURE AIR CONDITIONING UNIT	HOFFMAN	CR2904180068	FABRICATOR
29	1	4-PORT ETHERNET SWITCH	HIRSCHMAN	RS20-0400T1T1SDAE	FABRICATOR
30	1	DSL MODEM	--	--	FABRICATOR
31	1	HMI COMPUTER SCREEN, 512MB, 80GH (MAPLE SYSTEM GOLD SERIES)	MAPLE SYSTEM	PC110A	FABRICATOR
32	1	ALARM AUTODIALING MONITORING PANEL (VERBATIM)	RACO	302VSS-16C	FABRICATOR
33	5	FLOW TRANSMITTER	SEAMETRICS	FT420	FABRICATOR
34	2	DIN RAIL MOUNTED UTILITY OUTLET (EM-DOU)	PHOENIX	P/N #5600481	FABRICATOR
35	1	UPS POWER SUPPLY, H00VA 120V INPUT, 120V OUTPUT	POWERWARE	PW5115-1400	FABRICATOR
36	5	WARRICK CONTROL RELAY, 120VAC COIL, 1-FORM "C" CONTACT 10-AMP	WARRICK	16WAA1B000	FABRICATOR
37	5	RELAY BASE, 11-PIN DIN SOCKET	WARRICK	--	FABRICATOR
38	1	COPPER GROUND BAR	--	--	FABRICATOR

NAMEPLATE SCHEDULE

**	NP1	GROUNDWATER TREATMENT PLANT PLC PANEL	NP26	TB1-CBA10 (DISCRETE INPUT MODULE BASE 1)
	NP2	DISCRETE INPUT MODULE BASE 1	NP27	TB1-CBA11 (DISCRETE INPUT MODULE BASE 2)
	NP3	DISCRETE INPUT MODULE BASE 2	NP28	TB1-CBA12 (DISCRETE INPUT MODULE BASE 3)
	NP4	DISCRETE INPUT MODULE BASE 3	NP29	TB1-CBA13 (DISCRETE OUTPUT MODULE BASE 4)
	NP5	DISCRETE OUTPUT MODULE BASE 4	NP30	TB1-CBA14 (DISCRETE OUTPUT MODULE BASE 5)
	NP6	DISCRETE OUTPUT MODULE BASE 5	NP30A	WELL VAULT CONTROL RELAY
	NP7	ANALOG INPUT MODULE BASE 6	NP31	TB4-CBD1 (ANALOG INPUT MODULE BASE 6)
	NP8	ANALOG INPUT MODULE BASE 7	NP32	TB4-CBD2 (ANALOG INPUT MODULE BASE 7)
	NP9	ANALOG INPUT MODULE BASE 8	NP33	TB4-CBD3 (ANALOG INPUT MODULE BASE 8)
	NP10	ANALOG OUTPUT MODULE BASE 9	NP34	TB4-CBD4 (ANALOG OUTPUT MODULE BASE 9)
	NP11	ANALOG INPUT MODULE BASE 10 (SPARE)	NP35	TB4-CBD5 (ANALOG INPUT MODULE BASE 10)
	NP12	TB1	NP36	TB4-CBD6 (ETHERNET SWITCH)
	NP13	TB2	NP37	TB4-CBD7 (SPARE)
	NP14	TB3	NP38	TB4-CBD8 (SPARE)
	NP15	TB4	NP39	ETHERNET SWITCH
	NP16	TB5	NP40	DSL MODEM
	NP17	TB1-CBA (ENCLOSURE AIR CONDITIONER)	NP41	24VDC POWER SUPPLY
	NP17A	TB1-CBA1 (MAIN)	NP42	CONTROL RELAY
	NP18	TB1-CBA2 (RECEP)	NP43	120VAC RECEPTACLE (UPS)
	NP19	TB1-CBA3 (PANEL LIGHT)	NP43A	120VAC RECEPTACLE (NON-UPS)
	NP20	TB1-CBA4 (J11-J34)	NP44	FIT-115
	NP21	TB1-CBA5 (J11-J18)	NP45	FIT-125
	NP22	TB1-CBA6 (J11-J33)	NP48	FIT-135
	NP23	TB1-CBA7 (AUTO DIALING MONITOR)	NP47	FIT-145
	NP24	TB1-CBA8 (HMI COMPUTER SCREEN)	NP48	FIT-155
	NP25	TB1-CBA9 (24VDC POWER SUPPLY)	NP49	WELL VAULT CONTROL RELAY

3/16" HEIGHT WHITE LETTERING ON PHENOLIC BLACK BACKGROUND

** 1/2" HEIGHT WHITE LETTERING ON PHENOLIC BLACK BACKGROUND

REV	DATE	BY	DESCRIPTION
E	08/19/08	BRB	REVISED PER CLIENT COMMENTS
D	08/11/08	BRB	REVISED PER CLIENT COMMENTS
C	07/21/08	NAB	REVISED PER CLIENT COMMENTS
B	07/15/08	NAB	REVISED PER CLIENT COMMENTS
A	06/30/08	NAB	ISSUED FOR REVIEW

REVISION

1/4"=1"

SPEC Services Inc
17101 Bushard Street
Fountain Valley, CA 92708
(714) 965-0077

PLC PANEL LAYOUT
GROUNDWATER TREATMENT PLANT
OMEGA CHEMICAL SUPERFUND SITE

DRAWN	CHECKED	DEPT APPV
SAB	NAB	
DATE 04/30/08	SCALE 1/4"=1"	ENGR APPV

4250-E-SK-1

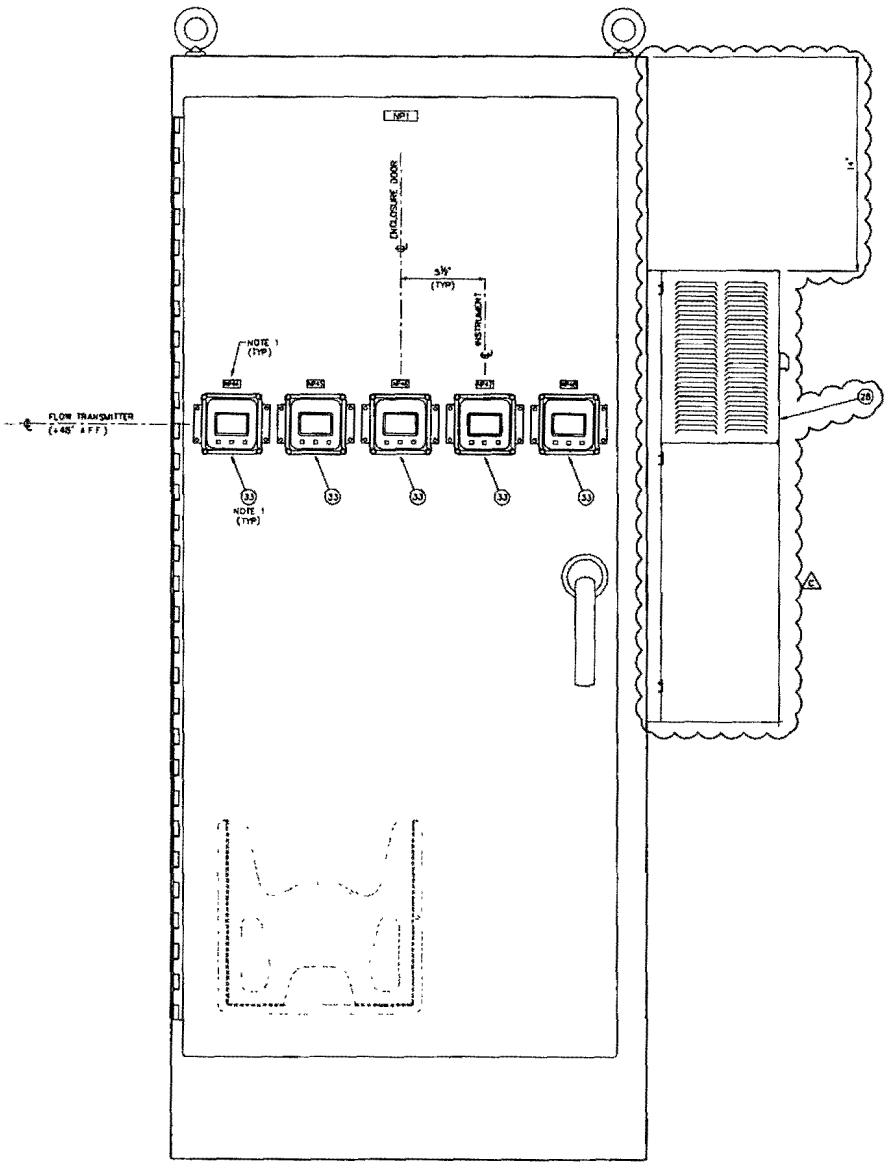

PANEL ENCLOSURE
(SHOWN WITH DOOR CLOSED)

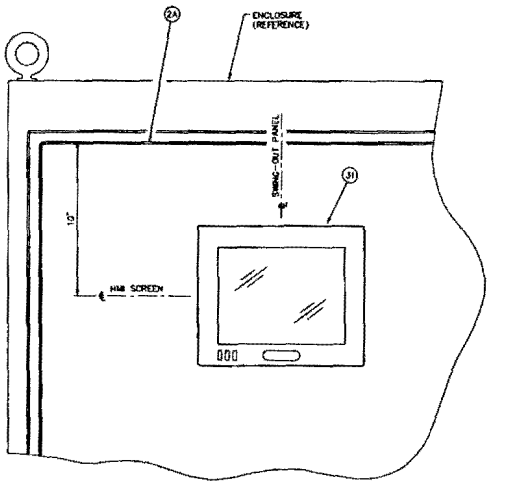

PARTIAL SWING-OUT PANEL ELEVATION

NOTES:

1. FOR BILL OF MATERIALS AND NAMEPLATE SCHEDULE SEE DWG 4250-E-SK-1

1/4"=1"

SPEC Services, Inc
17101 Bushard Street
Fountain Valley, CA 92708
(714) 963-8877

REV	DATE	BY	DESCRIPTION
C	08/19/08	BRB	REVISED PER CLIENT COMMENTS
B	07/21/08	NAB	REVISED PER CLIENT COMMENTS
A	07/15/08	NAB	REVISED PER CLIENT COMMENTS

REVISION

PLC PANEL LAYOUT
GROUNDWATER TREATMENT PLANT
OMEGA CHEMICAL SUPERFUND SITE

DRAWN	SAB	CHECKED	NAB	DRFT APPV
DATE	07/12/08	SCALE	1/4"=1"	ENGR APPV

4250-E-SK-2

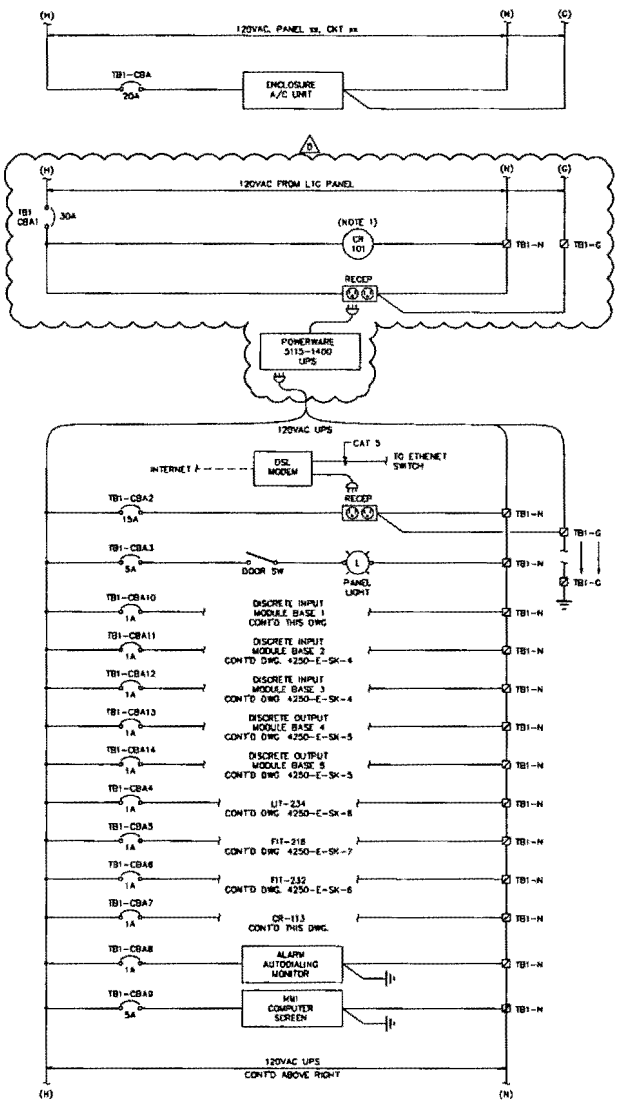

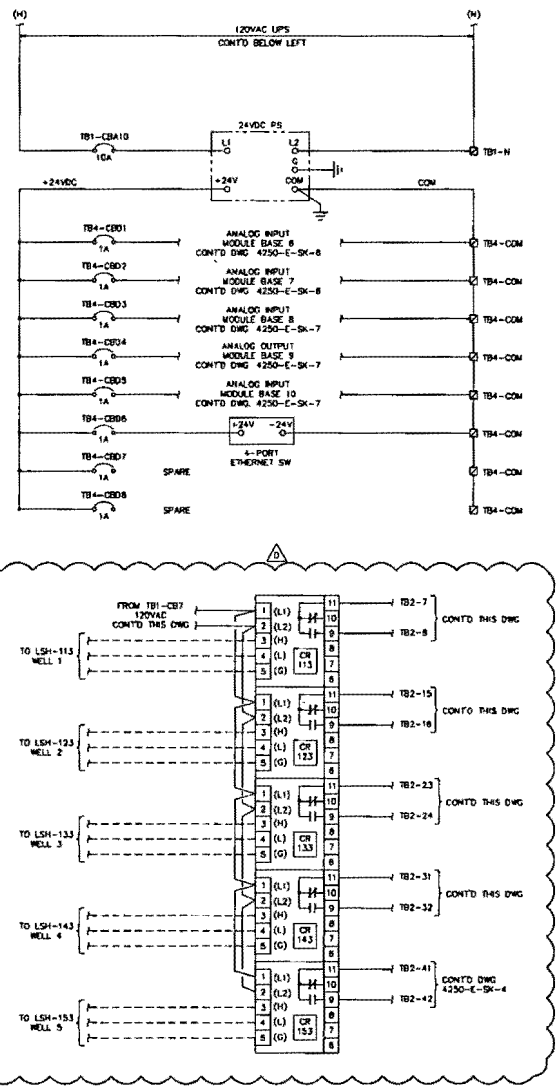

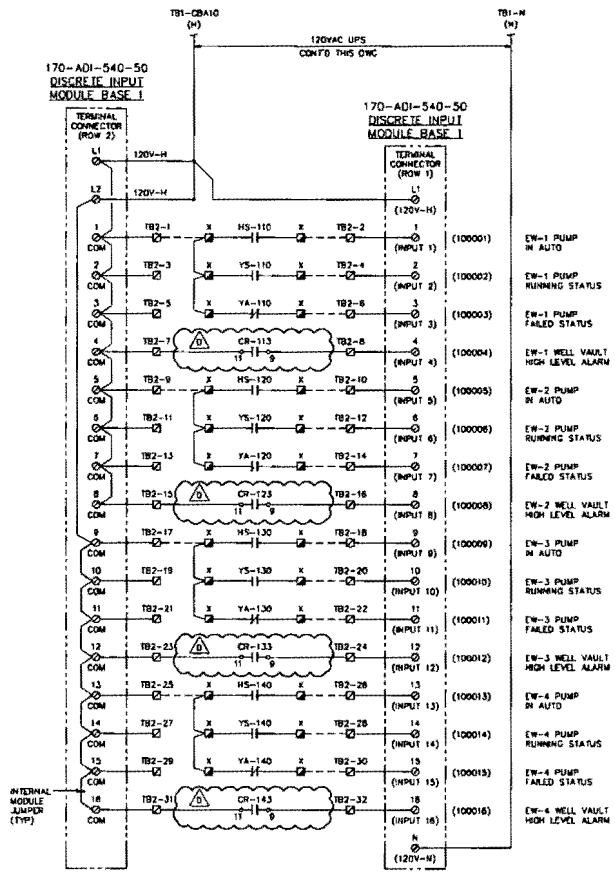

NOTES:

1. FOR RELAY CR-101 CONTACT WIRING DIAGRAM SEE DWG 4250-E-SK-6

LEGEND:

- FIELD WIRING
- PREWIRED WITH EQUIPMENT
- TERMINAL IN PLC MODULE
- TERMINAL IN PLC PANEL
- TERMINAL IN MCC OR FIELD CONTROL PANEL
- TERMINAL IN DEVICE OR EQUIPMENT

120VAC/24VDC PLC PANEL POWER WIRING DIAGRAM

REV	DATE	BY	DESCRIPTION
D	08/11/08	BRB	REVISED PER CLIENT COMMENTS
C	07/21/08	NAB	REVISED PER CLIENT COMMENTS
B	07/15/08	NAB	REVISED PER CLIENT COMMENTS
A	06/30/08	NAB	ISSUED FOR REVIEW

REVISION

SPEC Services, Inc.
1701 Gisland Street
Fountain Valley, CA 92708
(714) 963-0077

PLC I/O WIRING DIAGRAM
GROUNDWATER TREATMENT PLANT
OMEGA CHEMICAL SUPERFUND SITE

DRAWN	CHECKED	DIST APPV
NAB	LOI	
DATE 04/29/08	SCALE NONE	ENGR APPV

4250-E-SK-3

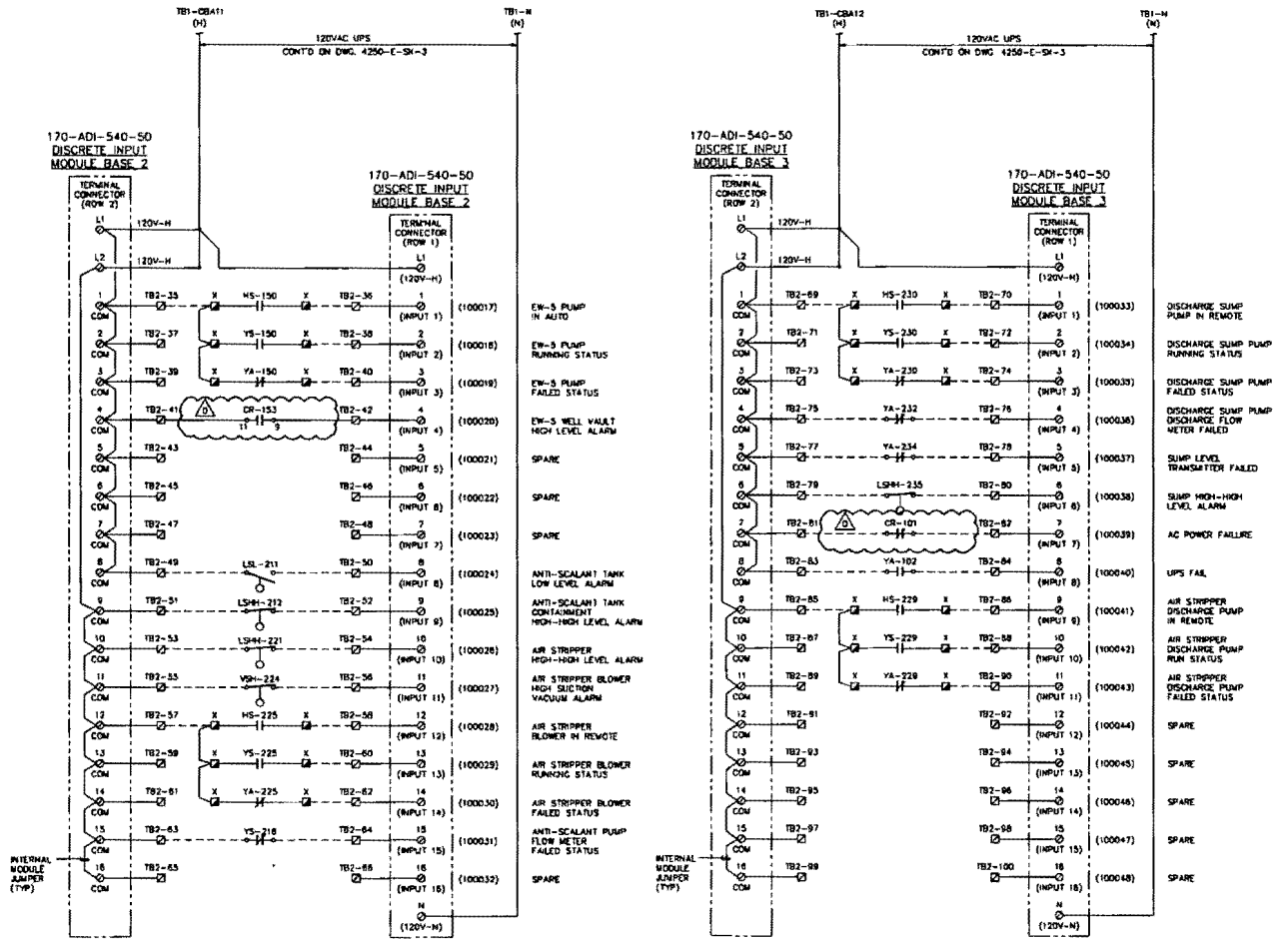

LEGEND

- FIELD WIRING
- PREWIRED WITH EQUIPMENT
- TERMINAL IN PLC MODULE
- TERMINAL IN PLC PANEL
- TERMINAL IN MCC OR FIELD CONTROL PANEL
- TERMINAL IN DEVICE OR EQUIPMENT

REV	DATE	BY	DESCRIPTION
D	09/11/08	SRB	REVISED PER CLIENT COMMENTS
C	07/21/08	NAB	REVISED PER CLIENT COMMENTS
B	07/15/08	NAB	REVISED PER CLIENT COMMENTS
A	06/30/08	NAB	ISSUED FOR REVIEW

REVISION

SPEC Services, Inc.
1901 Bayshore Street
Fountain Valley, CA 92708
(714) 963-8677

PLC I/O WIRING DIAGRAM
GROUNDWATER TREATMENT PLANT
OMEGA CHEMICAL SUPERFUND SITE

DRAWN	CHECKED	ORIT APPV
NAB	LQI	
DATE 04/29/08	SCALE NONE	ENGR APPV

4250-E-SK-4

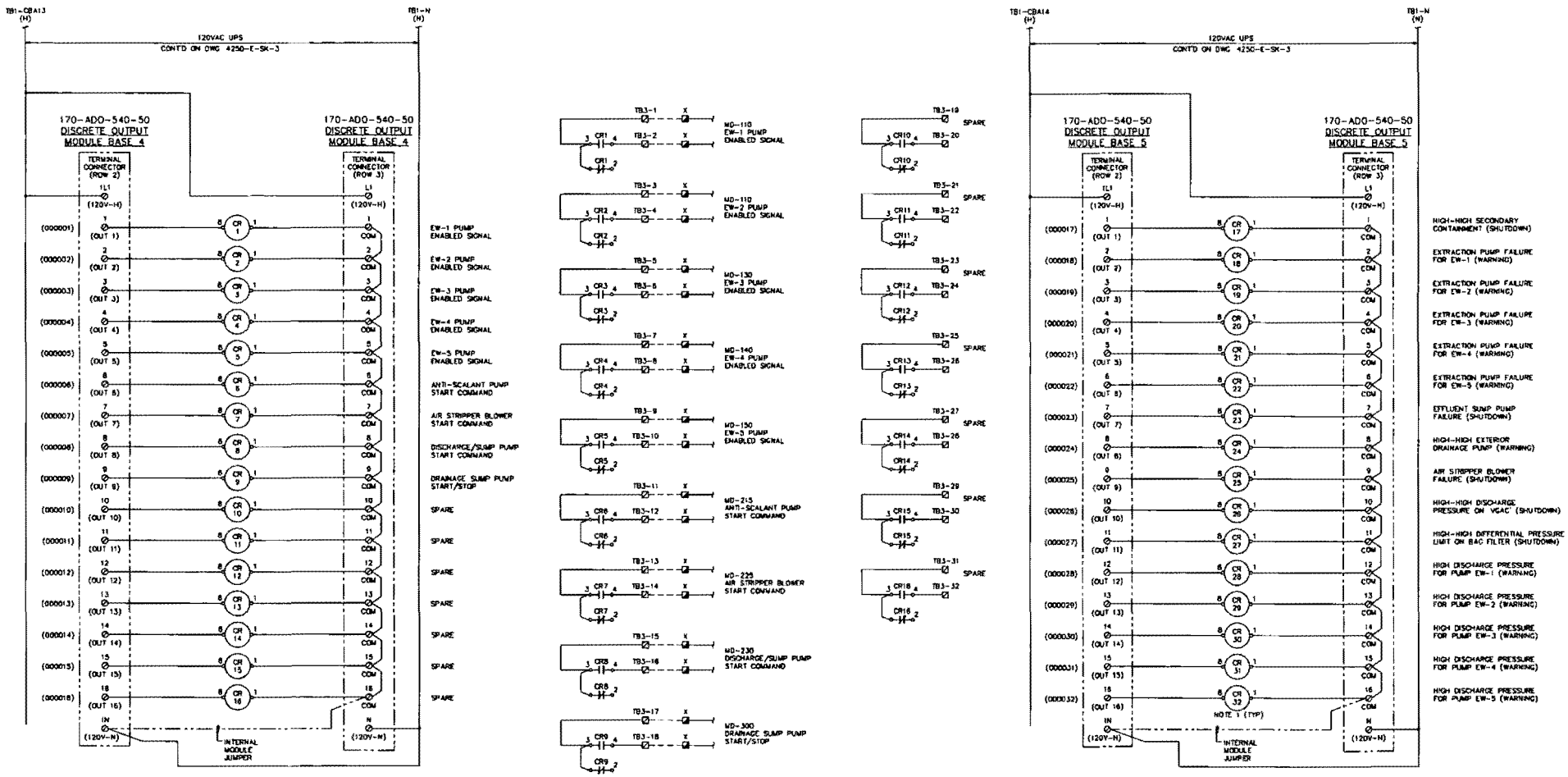

NOTES:

1. FOR RELAY OUTPUT CONTACT WIRING TO ALARM DIALING MONITOR PANEL SEE DWG 4250-E-SK-8

LEGEND

- ---- FIELD WIRING
- ——— PREWIRED WITH EQUIPMENT
- ⊘ TERMINAL IN PLC MODULE
- ☑ TERMINAL IN PLC PANEL
- ◪ TERMINAL IN MCC OR FIELD CONTROL PANEL
- ○ TERMINAL IN DEVICE OR EQUIPMENT

SPEC Services, Inc.
17101 Burners Street
Fountain Valley, CA 92708
(714) 963-8077

REV	DATE	BY	DESCRIPTION
C	07/21/08	NAB	REVISED PER CLIENT COMMENTS
B	07/15/08	NAB	REVISED PER CLIENT COMMENTS
A	06/30/08	NAB	ISSUED FOR REVIEW

REVISION

PLC I/O WIRING DIAGRAM
GROUNDWATER TREATMENT PLANT
OMEGA CHEMICAL SUPERFUND SITE

DRAWN	CHECKED	DRFT APPV
NAB	LQI	
DATE 04/29/08	SCALE NONE	ENGR APPV

4250-E-SK-5

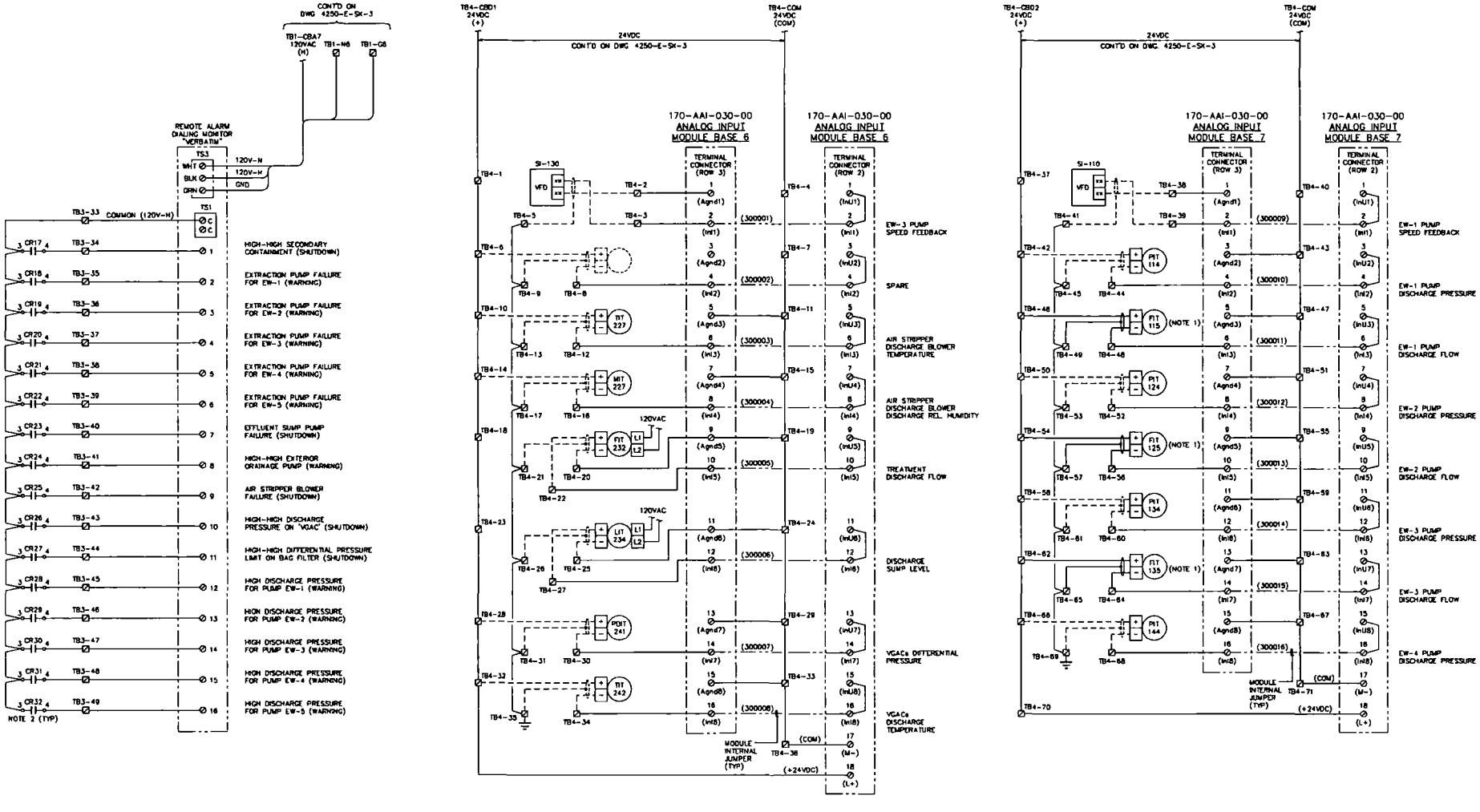

NOTES

1. SEAMETRICS FT420 MOUNTED ON PANEL DOOR
2. FOR RELAY OUTPUT WIRING DIAGRAM SEE DWG 4250-E-SK-5

LEGEND

- ---- FIELD WIRING
- ——— PREWIRED WITH EQUIPMENT
- ⊘ TERMINAL IN PLC MODULE
- ☑ TERMINAL IN PLC PANEL
- ◪ TERMINAL IN MCC OR FIELD CONTROL PANEL
- ○ TERMINAL IN DEVICE OR EQUIPMENT

SPEC Services, Inc
17101 Bushard Street
Fountain Valley, CA 92708
(714) 963-8077

REV	DATE	BY	DESCRIPTION
C	07/21/08	NAB	REVISED PER CLIENT COMMENTS
B	07/15/08	NAB	REVISED PER CLIENT COMMENTS
A	08/30/08	NAB	ISSUED FOR REVIEW

REVISION

PLC I/O WIRING DIAGRAM
GROUNDWATER TREATMENT PLANT
OMEGA CHEMICAL SUPERFUND SITE

DRAWN	CHECKED	DRFT APPV
NAB	LOI	
DATE 04/29/08	SCALE NONE	ENGR APPV

4250-E-SK-6

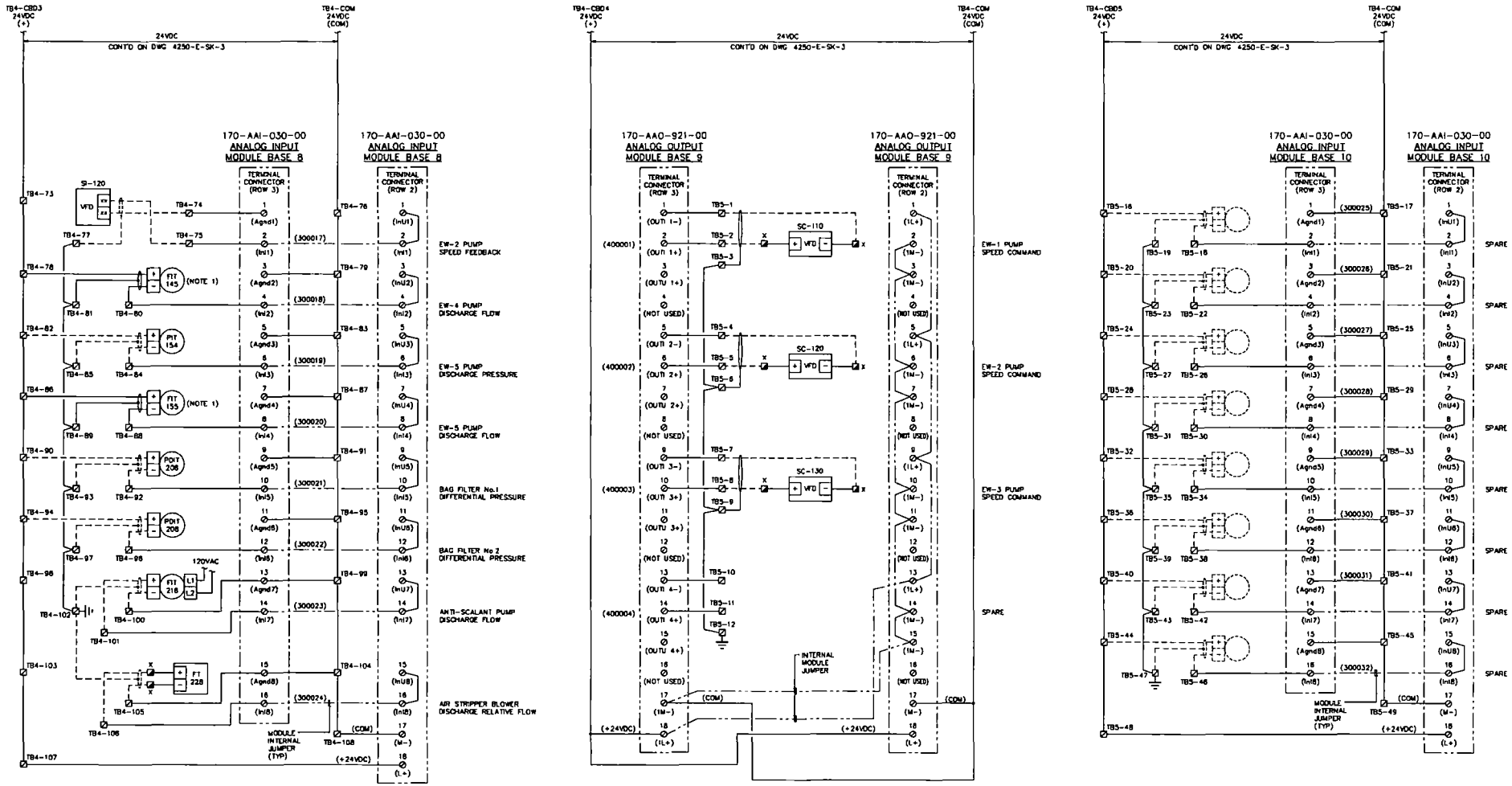

LEGEND

- FIELD WIRING
- PREWIRED WITH EQUIPMENT
- ⊘ TERMINAL IN PLC MODULE
- ☑ TERMINAL IN PLC PANEL
- ◪ TERMINAL IN MCC OR FIELD CONTROL PANEL
- ○ TERMINAL IN DEVICE OR EQUIPMENT

SPEC Services, Inc.
17101 Bushard Street
Fountain Valley, CA 92708
(714) 963-8077

REV	DATE	BY	DESCRIPTION
C	07/21/08	NAB	REVISED PER CLIENT COMMENTS
B	07/15/08	NAB	REVISED PER CLIENT COMMENTS
A	08/30/08	NAB	ISSUED FOR REVIEW

REVISION

PLC I/O WIRING DIAGRAM
GROUNDWATER TREATMENT PLANT
OMEGA CHEMICAL SUPERFUND SITE

DRAWN	CHECKED	DRFT APPV
NAB	LOI	
DATE 04/29/08	SCALE NONE	ENGR. APPV

4250-E-SK-7

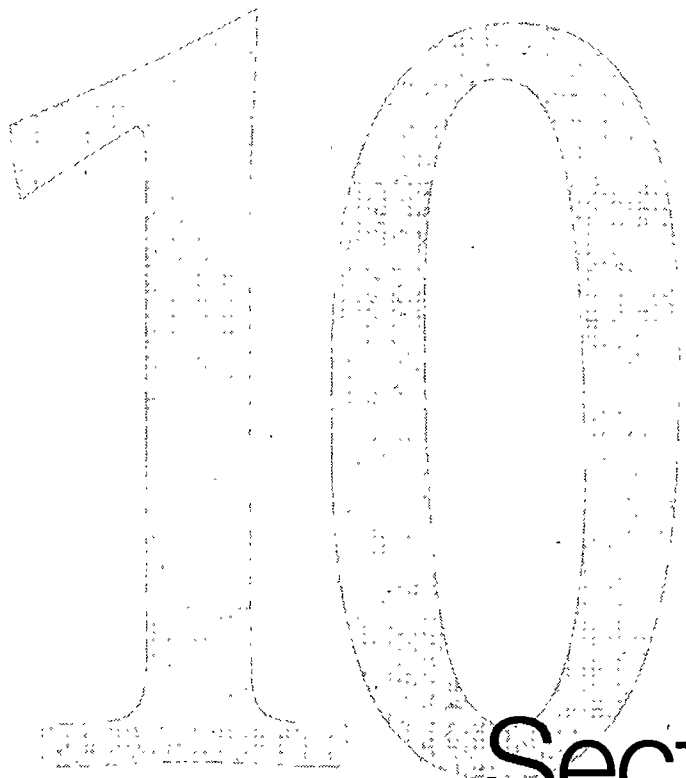

Section Ten

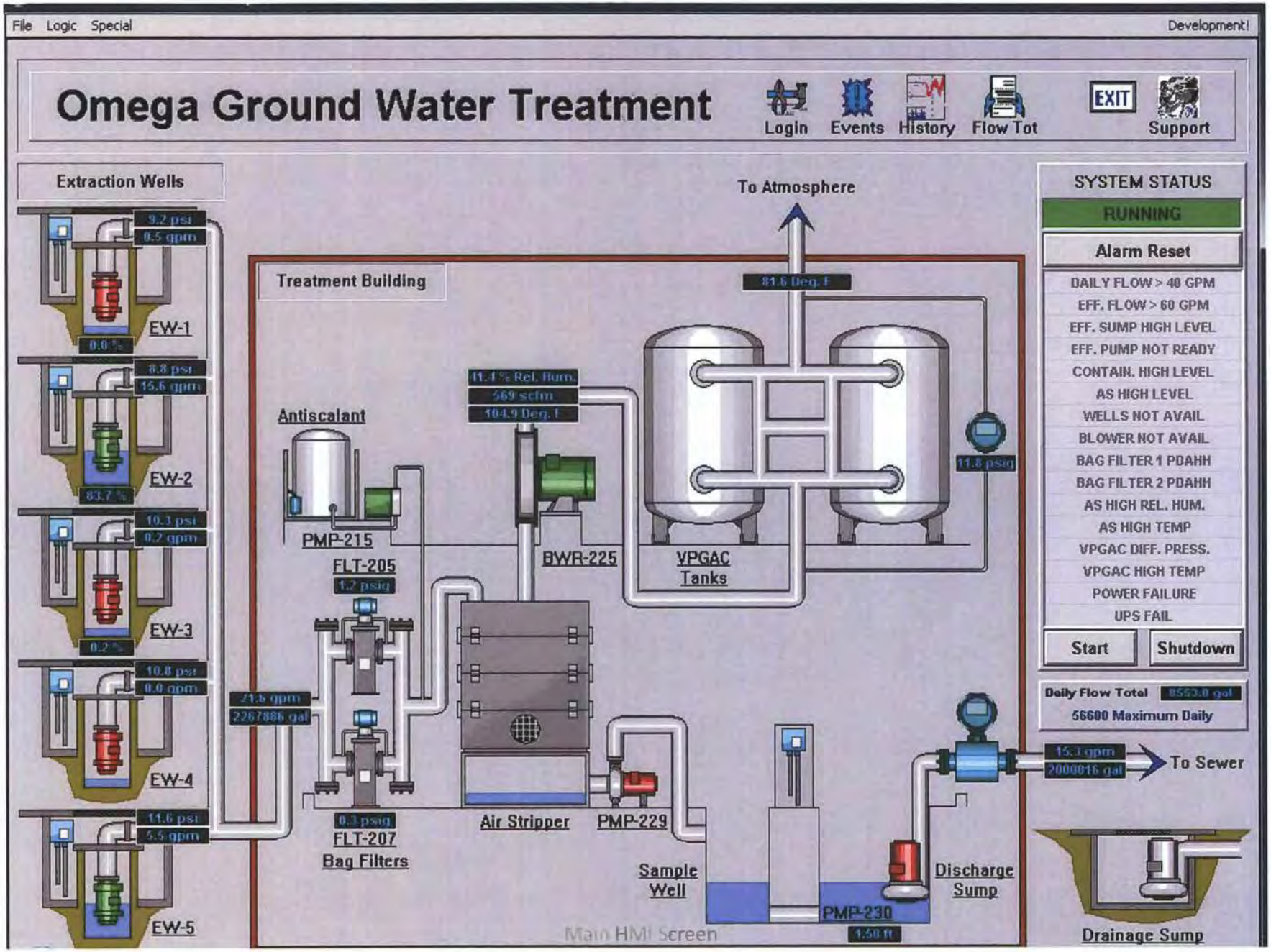
File Logic Special
Development!
Omega Ground Water Treatment
Login
Events
History
Flow Tot
EXIT
Support
Extraction Wells
9.2 psi
0.5 gpm
EW-1
0.0 %
8.8 psi
15.6 gpm
EW-2
83.7 %
10.3 psi
0.2 gpm
EW-3
0.2 %
10.8 psi
0.0 gpm
EW-4
11.6 psi
5.5 gpm
EW-5
Treatment Building
To Atmosphere
81.6 Deg. F
11.4 % Rel. Hum.
569 scfm
104.9 Deg. F
Antiscalant
PMP-215
FLT-205
1.7 psig
BWR-225
VPGAC Tanks
11.8 psig
21.6 gpm
2267886 gal
0.3 psig
FLT-207
Bag Filters
Air Stripper
PMP-229
Sample Well
PMP-230
1.50 ft
Discharge Sump
15.3 gpm
2000016 gal
To Sewer
Drainage Sump
Main HMI Screen
SYSTEM STATUS
RUNNING
Alarm Reset
DAILY FLOW > 40 GPM
EFF. FLOW > 60 GPM
EFF. SUMP HIGH LEVEL
EFF. PUMP NOT READY
CONTAIN. HIGH LEVEL
AS HIGH LEVEL
WELLS NOT AVAIL
BLOWER NOT AVAIL
BAG FILTER 1 PDAHH
BAG FILTER 2 PDAHH
AS HIGH REL. HUM.
AS HIGH TEMP
VPGAC DIFF. PRESS.
VPGAC HIGH TEMP
POWER FAILURE
UPS FAIL
Start
Shutdown
Daily Flow Total 8553.0 gal
56600 Maximum Daily

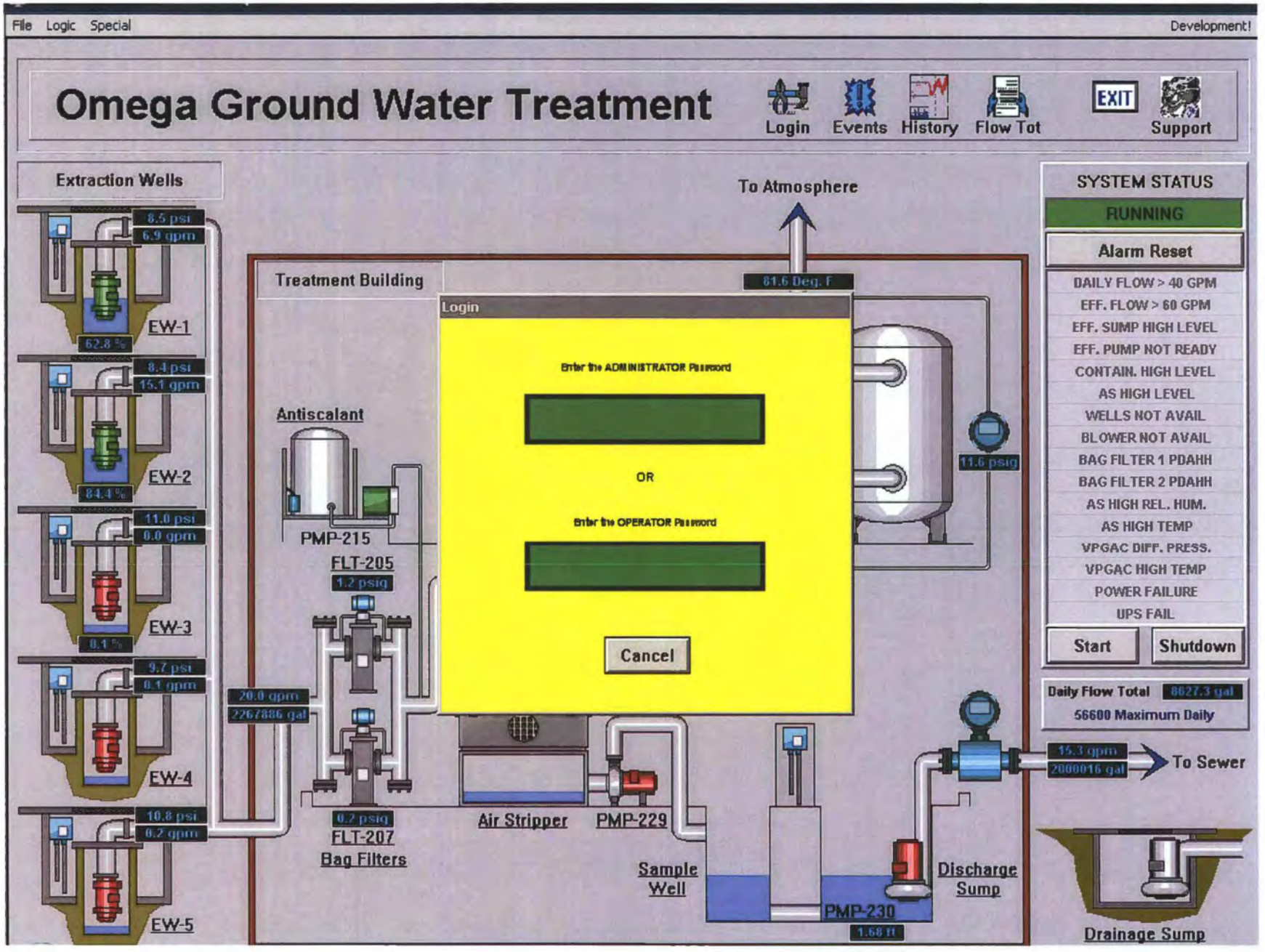
File Logic Special
Development!
Omega Ground Water Treatment
Login
Events
History
Flow Tot
EXIT
Support
Extraction Wells
8.5 psi
6.9 gpm
EW-1
62.8 %
8.4 psi
15.1 gpm
EW-2
84.4 %
11.0 psi
0.0 gpm
EW-3
0.1 %
9.7 psi
0.1 gpm
EW-4
10.8 psi
0.2 gpm
EW-5
To Atmosphere
Treatment Building
81.6 Deg. F
Login
Enter the ADMINISTRATOR Password
OR
Enter the OPERATOR Password
Cancel
Antiscalant
PMP-215
FLT-205
1.2 psig
11.6 psig
20.0 gpm
2267886 gal
0.2 psig
FLT-207
Bag Filters
Air Stripper
PMP-229
Sample Well
PMP-230
1.68 ft
Discharge Sump
15.3 gpm
2000016 gal
To Sewer
Drainage Sump
SYSTEM STATUS
RUNNING
Alarm Reset
DAILY FLOW > 40 GPM
EFF. FLOW > 60 GPM
EFF. SUMP HIGH LEVEL
EFF. PUMP NOT READY
CONTAIN. HIGH LEVEL
AS HIGH LEVEL
WELLS NOT AVAIL
BLOWER NOT AVAIL
BAG FILTER 1 PDAHH
BAG FILTER 2 PDAHH
AS HIGH REL. HUM.
AS HIGH TEMP
VPGAC DIFF. PRESS.
VPGAC HIGH TEMP
POWER FAILURE
UPS FAIL
Start
Shutdown
Daily Flow Total 8627.3 gal
56600 Maximum Daily

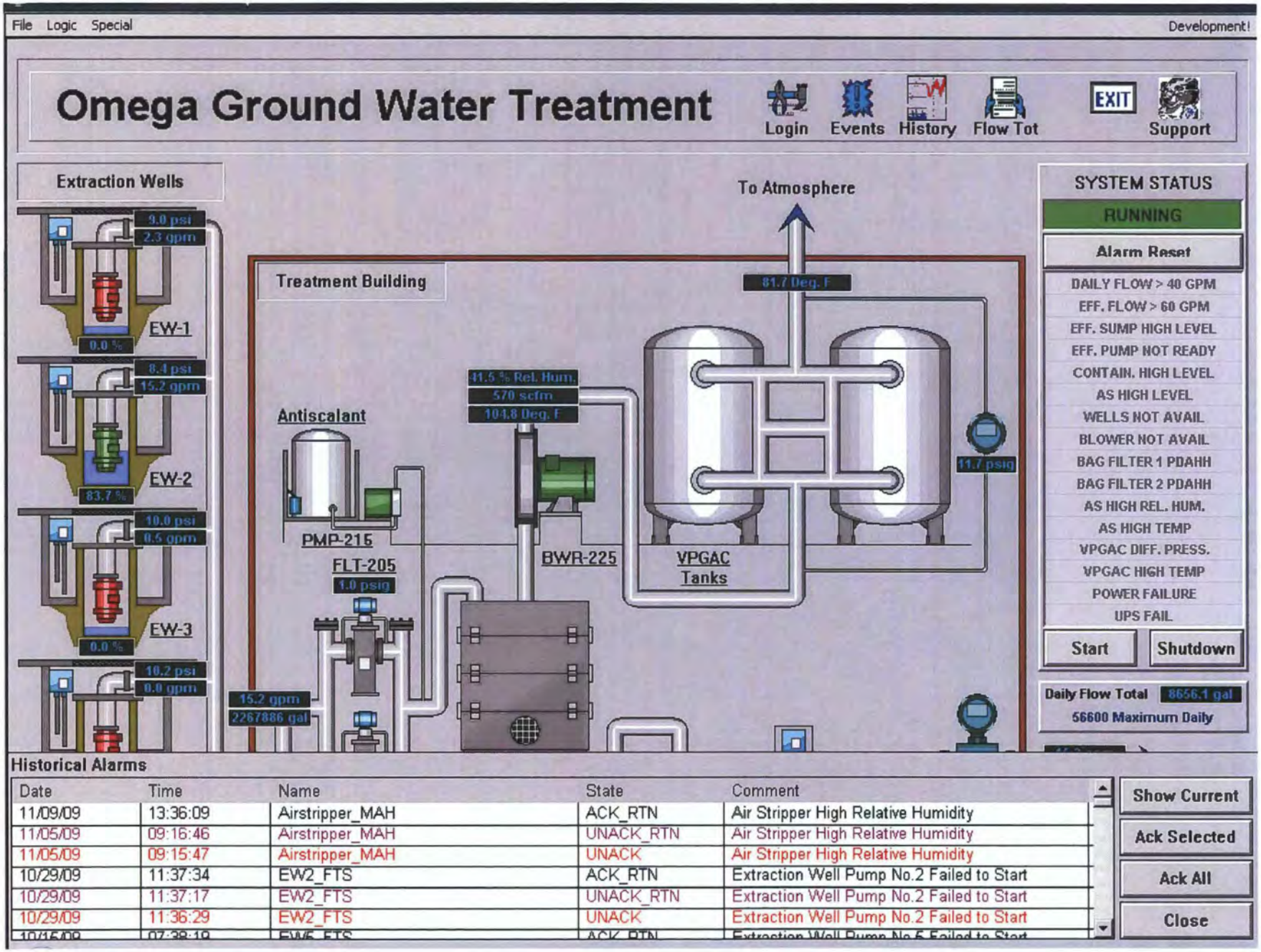
File Logic Special
Development!
Omega Ground Water Treatment
Login
Events
History
Flow Tot
EXIT
Support
Extraction Wells
9.0 psi
2.3 gpm
EW-1
0.0 %
8.4 psi
15.2 gpm
EW-2
83.7 %
10.0 psi
0.5 gpm
EW-3
0.0 %
10.2 psi
0.0 gpm
Treatment Building
To Atmosphere
81.7 Deg. F
41.5 % Rel. Hum.
570 scfm
104.8 Deg. F
Antiscalant
PMP-215
FLT-205
1.0 psig
BWR-225
VPGAC Tanks
11.7 psig
15.2 gpm
2267886 gal
SYSTEM STATUS
RUNNING
Alarm Reset
DAILY FLOW > 40 GPM
EFF. FLOW > 60 GPM
EFF. SUMP HIGH LEVEL
EFF. PUMP NOT READY
CONTAIN. HIGH LEVEL
AS HIGH LEVEL
WELLS NOT AVAIL
BLOWER NOT AVAIL
BAG FILTER 1 PDAHH
BAG FILTER 2 PDAHH
AS HIGH REL. HUM.
AS HIGH TEMP
VPGAC DIFF. PRESS.
VPGAC HIGH TEMP
POWER FAILURE
UPS FAIL
Start
Shutdown
Daily Flow Total 8656.1 gal
56600 Maximum Daily
Historical Alarms
Date Time Name State Comment
11/09/09 13:36:09 Airstripper_MAH ACK_RTN Air Stripper High Relative Humidity
11/05/09 09:16:46 Airstripper_MAH UNACK_RTN Air Stripper High Relative Humidity
11/05/09 09:15:47 Airstripper_MAH UNACK Air Stripper High Relative Humidity
10/29/09 11:37:34 EW2_FTS ACK_RTN Extraction Well Pump No.2 Failed to Start
10/29/09 11:37:17 EW2_FTS UNACK_RTN Extraction Well Pump No.2 Failed to Start
10/29/09 11:36:29 EW2_FTS UNACK Extraction Well Pump No.2 Failed to Start
Show Current
Ack Selected
Ack All
Close

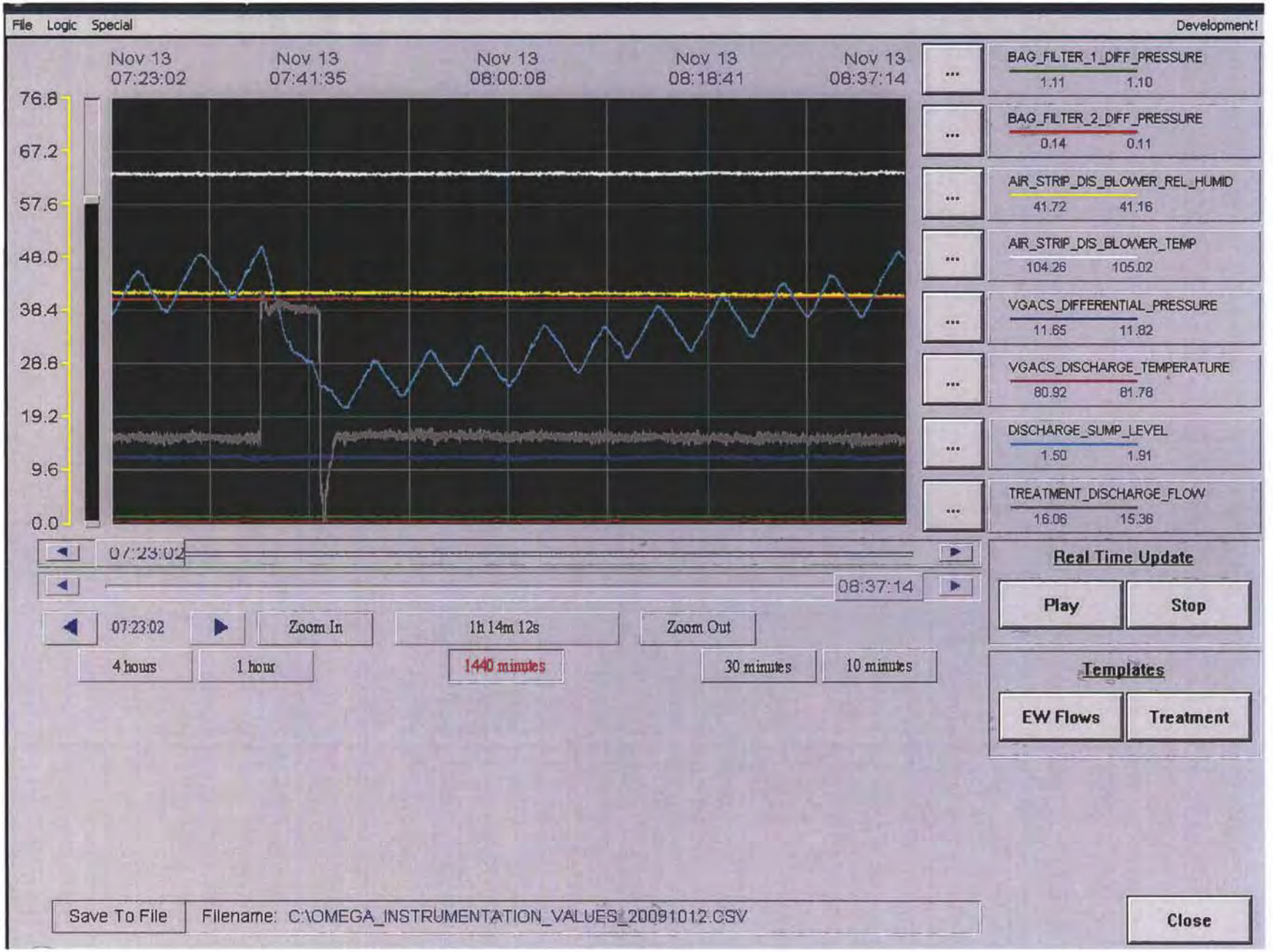
File Logic Special
Development!
Nov 13 07:23:02
Nov 13 07:41:35
Nov 13 08:00:08
Nov 13 08:18:41
Nov 13 08:37:14
76.8
67.2
57.6
48.0
38.4
28.8
19.2
9.6
0.0
07:23:02
08:37:14
BAG_FILTER_1_DIFF_PRESSURE
1.11 1.10
BAG_FILTER_2_DIFF_PRESSURE
0.14 0.11
AIR_STRIP_DIS_BLOWER_REL_HUMID
41.72 41.16
AIR_STRIP_DIS_BLOWER_TEMP
104.26 105.02
VGACS_DIFFERENTIAL_PRESSURE
11.65 11.82
VGACS_DISCHARGE_TEMPERATURE
80.92 81.78
DISCHARGE_SUMP_LEVEL
1.50 1.91
TREATMENT_DISCHARGE_FLOW
16.06 15.36
Real Time Update
Play
Stop
07:23:02
Zoom In
1h 14m 12s
Zoom Out
4 hours
1 hour
1440 minutes
30 minutes
10 minutes
Templates
EW Flows
Treatment
Save To File
Filename: C:\OMEGA_INSTRUMENTATION_VALUES_20091012.CSV
Close

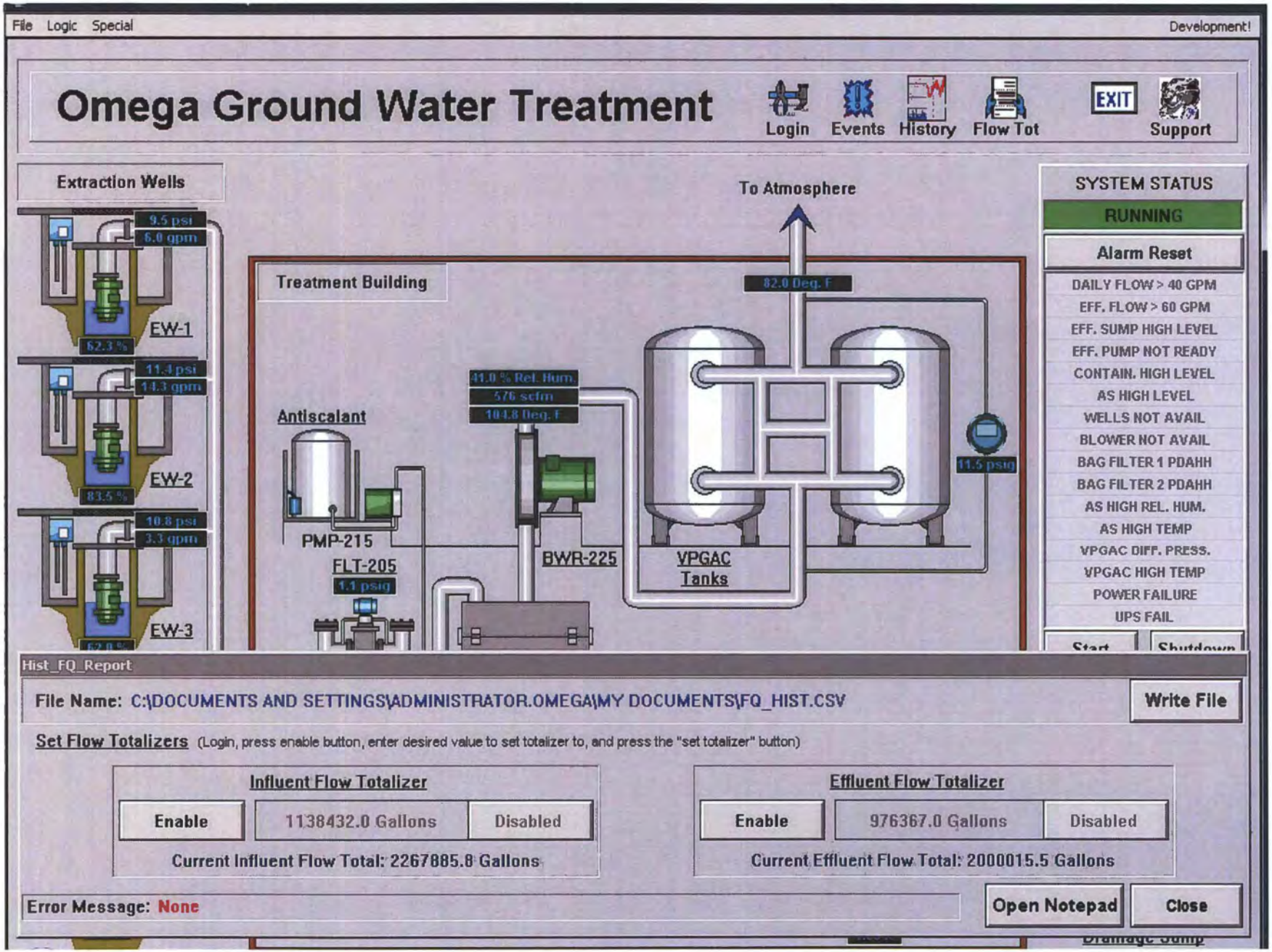
File Logic Special
Development!
Omega Ground Water Treatment
Login
Events
History
Flow Tot
EXIT
Support
Extraction Wells
9.5 psi
6.0 gpm
EW-1
62.3 %
11.4 psi
14.3 gpm
EW-2
83.5 %
10.8 psi
3.3 gpm
EW-3
To Atmosphere
Treatment Building
82.0 Deg. F
41.0 % Rel. Hum.
576 scfm
104.8 Deg. F
Antiscalant
PMP-215
FLT-205
1.1 psig
BWR-225
VPGAC Tanks
11.5 psig
SYSTEM STATUS
RUNNING
Alarm Reset
DAILY FLOW > 40 GPM
EFF. FLOW > 60 GPM
EFF. SUMP HIGH LEVEL
EFF. PUMP NOT READY
CONTAIN. HIGH LEVEL
AS HIGH LEVEL
WELLS NOT AVAIL
BLOWER NOT AVAIL
BAG FILTER 1 PDAHH
BAG FILTER 2 PDAHH
AS HIGH REL. HUM.
AS HIGH TEMP
VPGAC DIFF. PRESS.
VPGAC HIGH TEMP
POWER FAILURE
UPS FAIL
Start
Shutdown
Hist_FQ_Report
File Name: C:\DOCUMENTS AND SETTINGS\ADMINISTRATOR.OMEGA\MY DOCUMENTS\FQ_HIST.CSV
Write File
Set Flow Totalizers (Login, press enable button, enter desired value to set totalizer to, and press the "set totalizer" button)
Influent Flow Totalizer
Enable
1138432.0 Gallons
Disabled
Current Influent Flow Total: 2267885.8 Gallons
Effluent Flow Totalizer
Enable
976367.0 Gallons
Disabled
Current Effluent Flow Total: 2000015.5 Gallons
Error Message: None
Open Notepad
Close
Drainage Sump

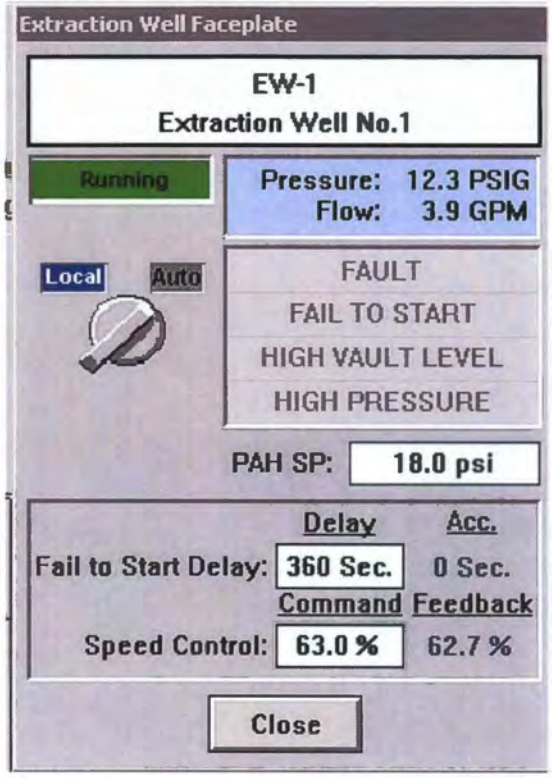
Extraction Well Faceplate
EW-1
Extraction Well No.1
Running
Pressure: 12.3 PSIG
Flow: 3.9 GPM
Local
Auto
FAULT
FAIL TO START
HIGH VAULT LEVEL
HIGH PRESSURE
PAH SP: 18.0 psi
Delay
Acc.
Fail to Start Delay: 360 Sec.
0 Sec.
Command
Feedback
Speed Control: 63.0 %
62.7 %
Close

Bag Filter 1
PDAH: 8.0 psig
PDAHH: 15.0 psig
Bag Filter 2
PDAH: 8.0 psig
PDAHH: 15.0 psig

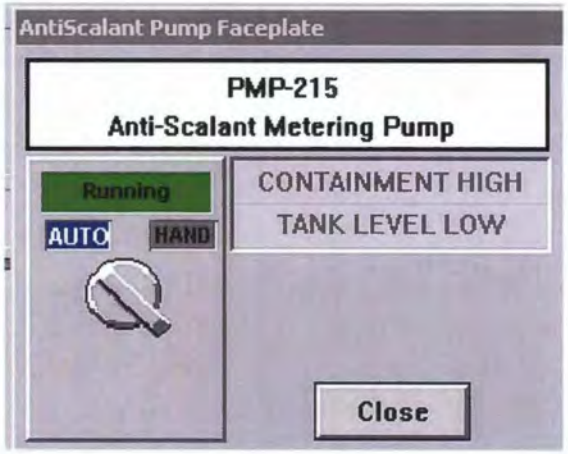
AntiScalant Pump Faceplate
PMP-215
Anti-Scalant Metering Pump
Running
AUTO
HAND
CONTAINMENT HIGH
TANK LEVEL LOW
Close

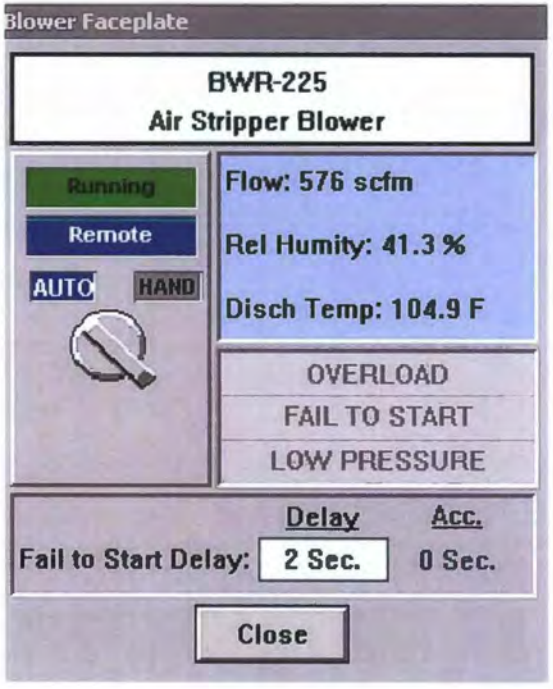
Blower Faceplate
BWR-225
Air Stripper Blower
Running
Remote
AUTO
HAND
Flow: 576 scfm
Rel Humity: 41.3 %
Disch Temp: 104.9 F
OVERLOAD
FAIL TO START
LOW PRESSURE
Delay
Acc.
Fail to Start Delay: 2 Sec.
0 Sec.
Close

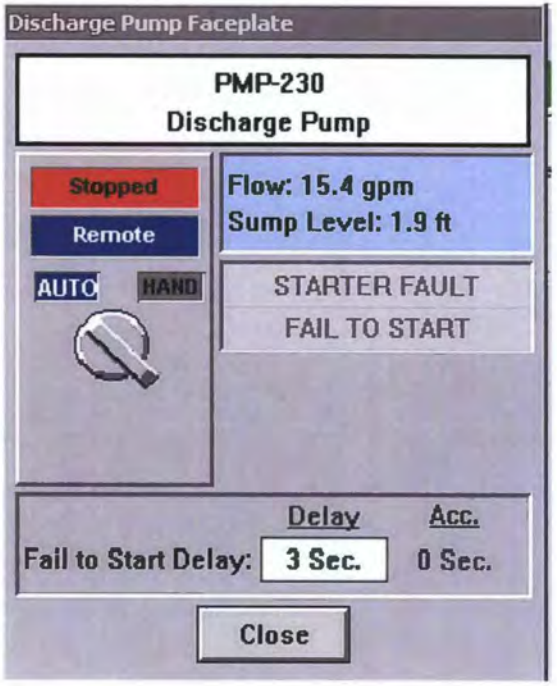
Discharge Pump Faceplate
PMP-230
Discharge Pump
Stopped
Remote
AUTO
HAND
Flow: 15.4 gpm
Sump Level: 1.9 ft
STARTER FAULT
FAIL TO START
Delay
Acc.
Fail to Start Delay: 3 Sec.
0 Sec.
Close

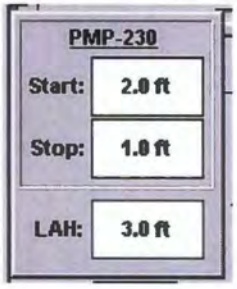
PMP-230
Start: 2.0 ft
Stop: 1.0 ft
LAH: 3.0 ft

PDAH: 15.0 psig
TAH: 150.0 Deg. F

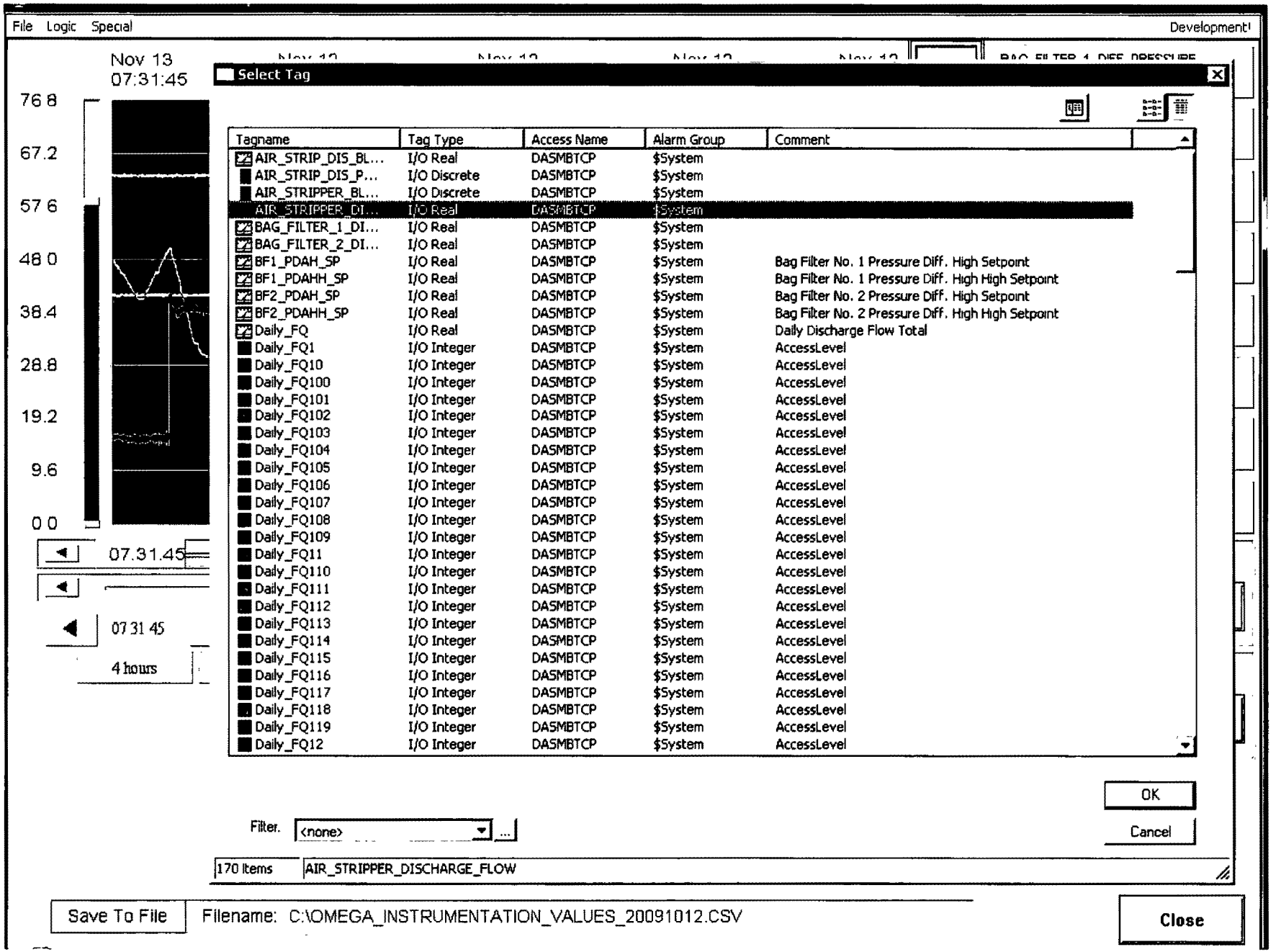
File Logic Special
Development
Nov 13
07:31:45
76 8
67.2
57 6
48 0
38.4
28.8
19.2
9.6
0 0
07.31.45
07 31 45
4 hours
Select Tag
Tagname
Tag Type
Access Name
Alarm Group
Comment
AIR_STRIP_DIS_BL...
I/O Real
DASMBTCP
$System
AIR_STRIP_DIS_P...
I/O Discrete
DASMBTCP
$System
AIR_STRIPPER_BL...
I/O Discrete
DASMBTCP
$System
AIR_STRIPPER_DI...
I/O Real
DASMBTCP
$System
BAG_FILTER_1_DI...
I/O Real
DASMBTCP
$System
BAG_FILTER_2_DI...
I/O Real
DASMBTCP
$System
BF1_PDAH_SP
I/O Real
DASMBTCP
$System
Bag Filter No. 1 Pressure Diff. High Setpoint
BF1_PDAHH_SP
I/O Real
DASMBTCP
$System
Bag Filter No. 1 Pressure Diff. High High Setpoint
BF2_PDAH_SP
I/O Real
DASMBTCP
$System
Bag Filter No. 2 Pressure Diff. High Setpoint
BF2_PDAHH_SP
I/O Real
DASMBTCP
$System
Bag Filter No. 2 Pressure Diff. High High Setpoint
Daily_FQ
I/O Real
DASMBTCP
$System
Daily Discharge Flow Total
Daily_FQ1
I/O Integer
DASMBTCP
$System
AccessLevel
Daily_FQ10
I/O Integer
DASMBTCP
$System
AccessLevel
Daily_FQ100
I/O Integer
DASMBTCP
$System
AccessLevel
Daily_FQ101
I/O Integer
DASMBTCP
$System
AccessLevel
Daily_FQ102
I/O Integer
DASMBTCP
$System
AccessLevel
Daily_FQ103
I/O Integer
DASMBTCP
$System
AccessLevel
Daily_FQ104
I/O Integer
DASMBTCP
$System
AccessLevel
Daily_FQ105
I/O Integer
DASMBTCP
$System
AccessLevel
Daily_FQ106
I/O Integer
DASMBTCP
$System
AccessLevel
Daily_FQ107
I/O Integer
DASMBTCP
$System
AccessLevel
Daily_FQ108
I/O Integer
DASMBTCP
$System
AccessLevel
Daily_FQ109
I/O Integer
DASMBTCP
$System
AccessLevel
Daily_FQ11
I/O Integer
DASMBTCP
$System
AccessLevel
Daily_FQ110
I/O Integer
DASMBTCP
$System
AccessLevel
Daily_FQ111
I/O Integer
DASMBTCP
$System
AccessLevel
Daily_FQ112
I/O Integer
DASMBTCP
$System
AccessLevel
Daily_FQ113
I/O Integer
DASMBTCP
$System
AccessLevel
Daily_FQ114
I/O Integer
DASMBTCP
$System
AccessLevel
Daily_FQ115
I/O Integer
DASMBTCP
$System
AccessLevel
Daily_FQ116
I/O Integer
DASMBTCP
$System
AccessLevel
Daily_FQ117
I/O Integer
DASMBTCP
$System
AccessLevel
Daily_FQ118
I/O Integer
DASMBTCP
$System
AccessLevel
Daily_FQ119
I/O Integer
DASMBTCP
$System
AccessLevel
Daily_FQ12
I/O Integer
DASMBTCP
$System
AccessLevel
OK
Cancel
Filter:
<none>
170 Items
AIR_STRIPPER_DISCHARGE_FLOW
Save To File
Filename: C:\OMEGA_INSTRUMENTATION_VALUES_20091012.CSV
Close

Panel PC

Gold Series

PC115B

15.0" 16.7M Color TFT LCD Touchscreen Panel PC

- Bright 16.7 million (24-bit) color TFT
- Intel® Celeron™ M 1.5 GHz CPU
- 40 GB hard drive
- 256 MB DDR memory
- Two USB ports
- Four serial ports
- Ethernet port (10/100/1000 Base-T)
- Compact Flash slot
- CE, NEMA4/IP65 certification
- Industrial grade construction
- Microsoft® Windows® XP Pro
- WebStudio software (optional)
- 1 year warranty

The PC115B is a 15.0" low cost industrial computer that supports the latest advances in microprocessor technology using the Intel Celeron M 1.5 GHz CPU for high-performance operation. The PC115B has extensive connectivity with high speed Ethernet port, two USB ports, and four serial ports. Standard models are in stock and ready to ship – all at a very affordable price.

The Gold Series Panel PCs are rugged enough for harsh environments. All models have a thick anodized aluminum bezel and electro-galvanized steel chassis. The motherboard is designed specifically for the industrial environment. These industrial computers withstand direct water jet or spraying when properly installed onto a NEMA4 rated panel.

Maple also offers many options to the standard configuration of the PC115B. Options include faster CPU, more memory, and your choice of CD-ROM, CD-RW, DVD-ROM, or DVD-RW drives. Custom configuration including fanless operation and expansion PCI slots are available upon request.

The Gold Series Panel PCs provide an open platform with the Microsoft Windows XP Professional operating system and its extensive hardware connectivity. This allows endless configuration options for applications of all levels of complexity – from simple single panel operator interface applications to complex networked SCADA systems. Maple Systems also offers, as an option, the WebStudio HMI/SCADA software. This easy-to-understand web-based interface provides a media-rich operating environment that communicates system conditions clearly to operators, while allowing supervisors and engineers to view and append data remotely.

Versatility and reliability, including our top notch technical support and customer service, make the Maple Systems Gold Series Panel PCs a winning combination.

Every Machine Needs the Human Touch

Maple Systems INC.

www.maplesystems.com

PC115B Specifications

Hardware

CPU Type	Intel® Celeron™ M 1.5 GHz processor
Memory	256 MB DDR
Hard Drive	40 GB 2.5" HDD
Ethernet Port	10/100/1000 Base-T (RJ45)
Serial Ports	4 COM ports Com1: RS-232/RS-422/RS-485, 2 or 4 wire Com2-4: RS-232
USB Ports	2 USB 2.0 host ports, Type A
Printer Port	DB25 parallel
SSD	1 Compact Flash slot, Type II
RTC	Built-in
PS/2 Ports	2 Mini DIN mouse and keyboard
Sound Output	20-bit stereo audio line out jack; mic in jack
VGA Port	Supports second monitor
Power Control	1 On/Off toggle switch

Display

Type	15" XGA TFT color
Size (WxH)	12.0 x 9.1 inches [305.5 x 230.8 mm] 15.0" diagonal
Resolution (pixels)	1024 x 768
Brightness (cd/m²)	350 (external VR adjustment)
Contrast Ratio	500:1
Max Colors	16.7 million (24 bit)
Viewing Angle (°)	40/60/60/60 (T,B,R,L)
Backlight Longevity	50,000 hrs (CCFLx2)

Touchscreen

Type	5-wire analog resistive
Resolution	4096 x 4096 cells
Light Transmission	80%
Lifespan	10 million activations minimum

Environmental

Operating Temperature	32 to 104°F [0 to 40°C]
Storage Temperature	-4 to 140°F [-20 to 60°C]
Relative Humidity	20-90% non-condensing
Shock (operation)	50G/Peak, 20 msec (X,Y, Z axis)
Vibration	10 to 200 Hz, 1.5G Peak , 30min (X,Y, Z axis)
Ratings	NEMA4/IP65
Certifications	CE, EMI FCC Class A, RoHS compliant

Specifications subject to change without notice.

Hardware Upgrades

CPU	Intel® Celeron™ M 1.7 GHz or Pentium M 1.6 GHz
Memory	512 MB or 1 GB DDR
CD	CD-ROM, CD-RW, DVD-ROM, or DVD-RW
Hard Drive	80 GB 2.5" HDD
Expansion Slots	1 PCI or 3 PCI riser card

Mechanical

Enclosure	Anodized aluminum front bezel Heavy duty electro galvanized steel chassis
Dimensions (WxHxD)	15.75 x 11.81 x 3.90 inches [400 x 300 x 99 mm]
Panel Cutout Dimensions (WxH)	14.76 x 10.63 inches [375 x 270 mm]
Weight	20.9 lbs [9.5 kg]
Mounting	Panel mount, VESA 75/100 bracket (opt)
Power Requirements	AC plug-in power cord (included) AC90-240V Input, 50-60 Hz ATX 110W
Warranty	1 year

Software

Operating System	Microsoft Windows XP Professional
HMI/SCADA Application	WebStudio (optional)

Order Number

PC115B	15.0" TFT Panel PC

Maple Systems INC.

808 134th St SW, Suite 120
Everett, WA 98204
425.745.3229 • 425.745.3429 (fax)
maple@maple-systems.com
www.maplesystems.com

PC115B Dimensions

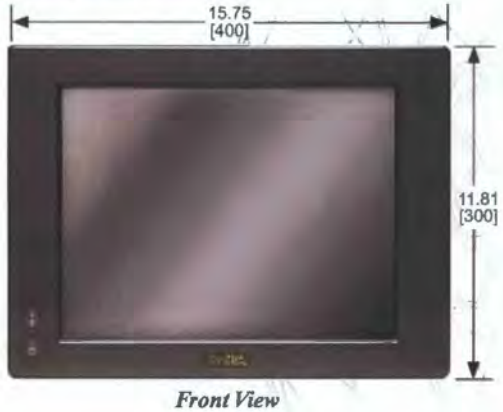

Front View

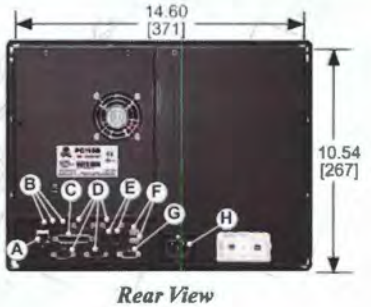

Rear View

Bottom View

A Ethernet LAN
B Audio Line-in, Mic and Line-out
C Parallel port
D 4x COM ports
E Mouse & keyboard
F 2x USB 2.0 Host, Type A
G VGA
H AC Jack
I On/Off switch

Dimensions in inches [mm]

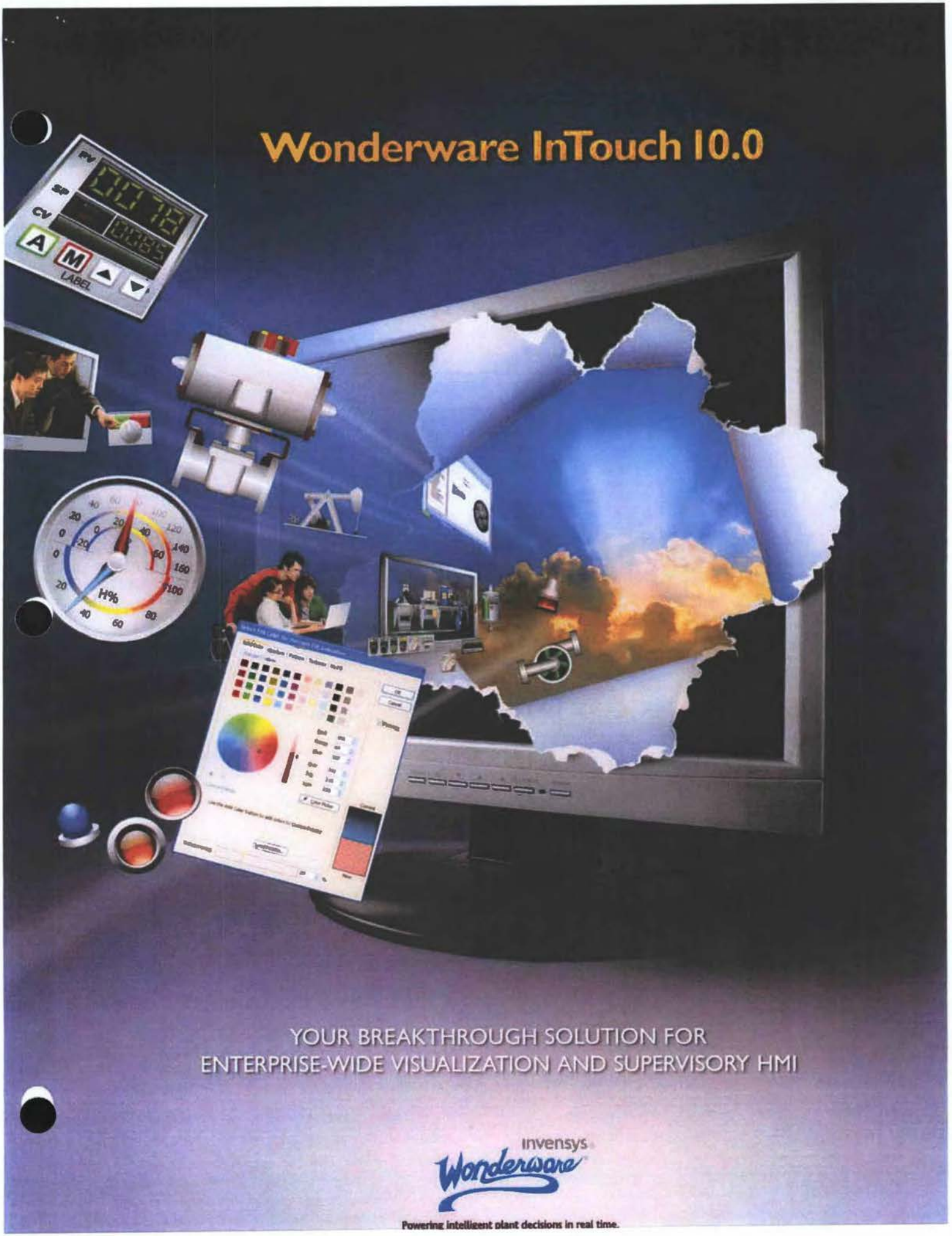
Wonderware InTouch 10.0
YOUR BREAKTHROUGH SOLUTION FOR
ENTERPRISE-WIDE VISUALIZATION AND SUPERVISORY HMI
invensys
Wonderware
Powering intelligent plant decisions in real time.

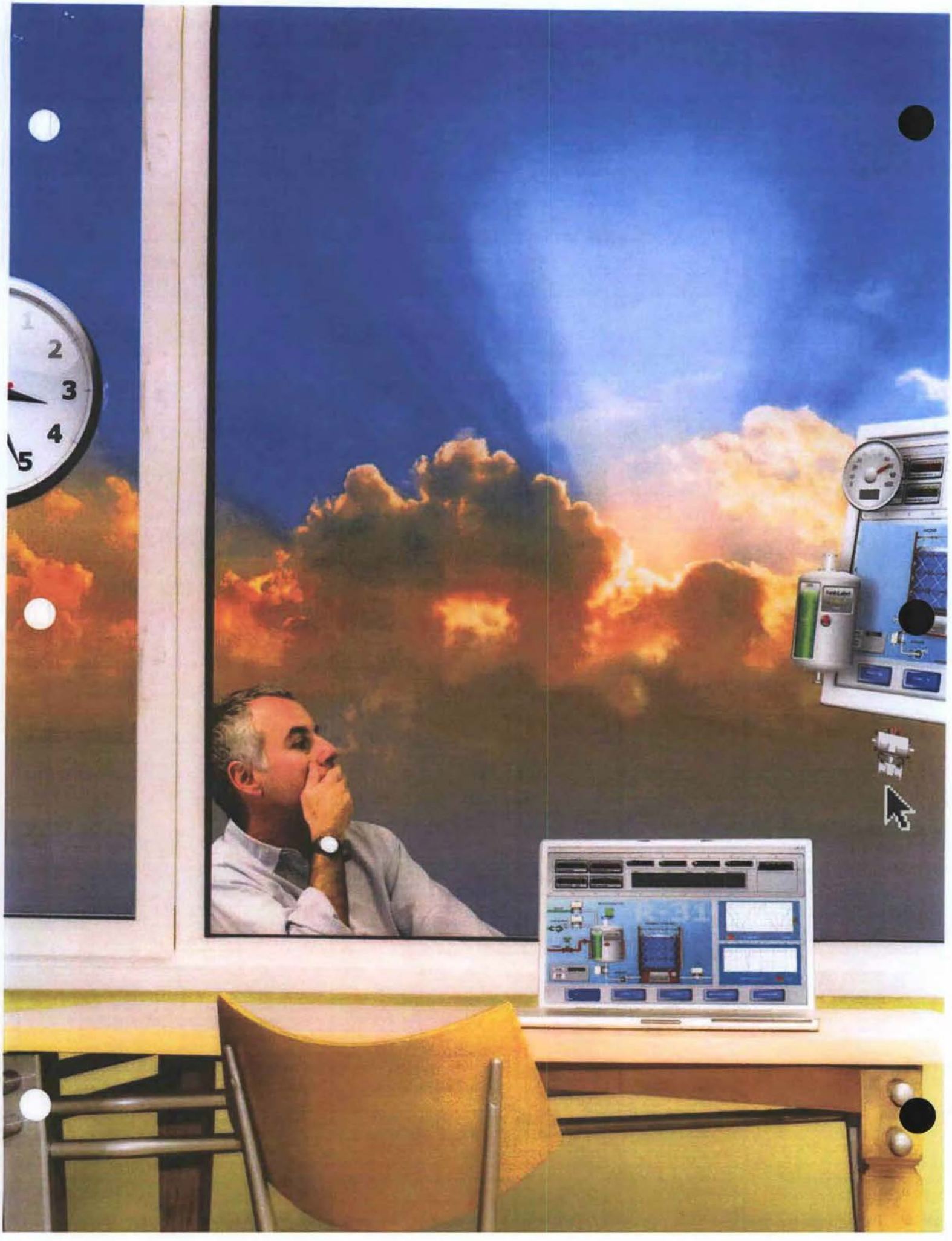

Breakthrough Visualization Capabilities

InTouch 10.0 software empowers you to quickly and easily develop custom graphical views of your real-time industrial processes.

InTouch 10.0 software provides a comprehensive range of graphics primitives from which graphical symbols may be created, including arcs, chords, pies, curves and Microsoft Windows® common controls as well as the ability to create complex shapes by combining simpler shapes together.

Advanced graphic attribute manipulation enables extremely powerful and precise control, via built-in animation or scripting of an incredible range of graphic attributes including transparency, smooth shading, fill style, line style, orientation, size, position and visibility enabling engineers to exercise their imagination and creativity to represent automation environments with style, utility and efficiency.

Ready-to-use Symbol Library

InTouch 10.0 comes equipped with an extensible ArchestrA symbol library containing over 500 professionally designed ArchestrA graphic symbols, most with customizable 'intelligence' already incorporated, giving you drag-and-drop access to pre-built engineering components.

Library symbols may be used out-of-the-box or customized as needed. You may add your own new or modified symbols, or you may create your own special libraries of symbols to suit your engineering and development requirements.

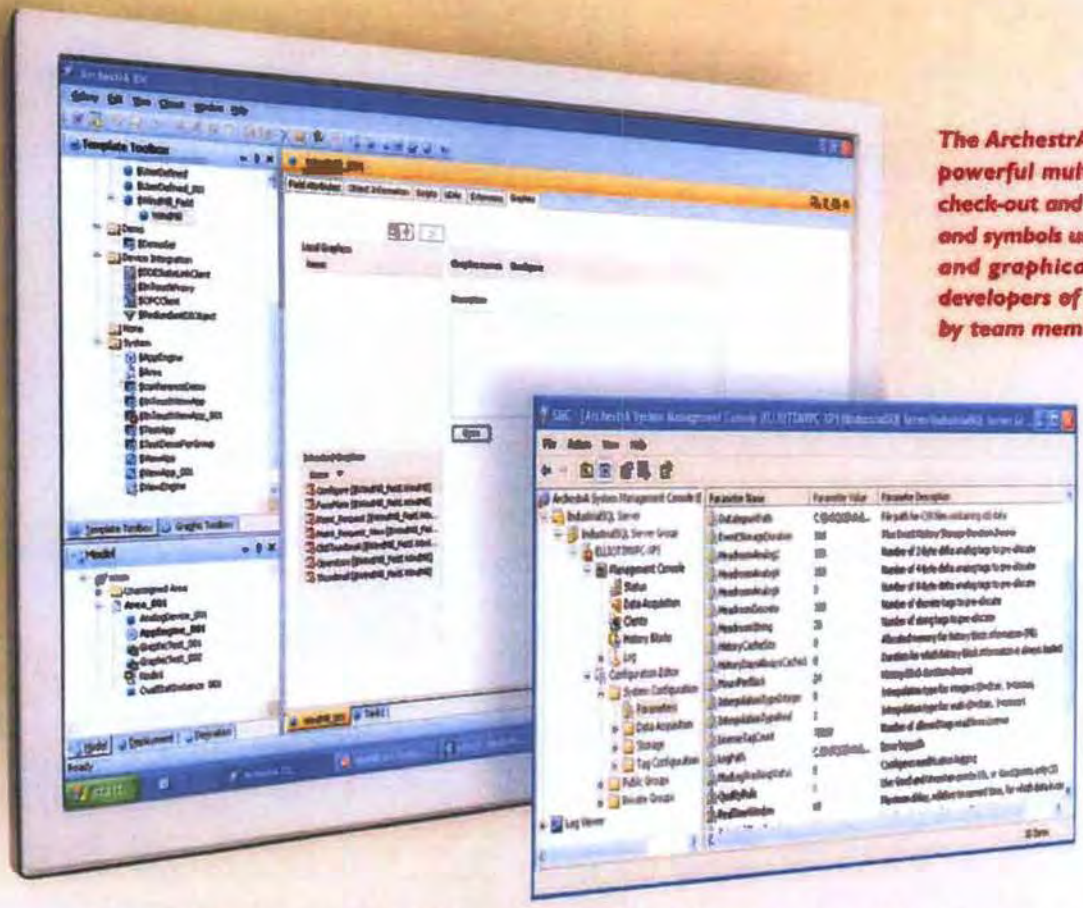

The ArchestrA IDE provides powerful multi-user features, check-out and check-in of objects and symbols under development, and graphical feedback to developers of significant changes by team members.

One Powerfully Simple Development Environment

The Wonderware Development Studio preserves and expands Wonderware's legendary ease of use and now includes a common Integrated Development Environment (IDE) for both the Wonderware System Platform 3.0 and InTouch 10.0 to provide unprecedented power, flexibility and scalability to engineers and developers from the smallest HMI application to the largest enterprise automation network all within a single consistent toolset.

The feature-rich ArchestrA IDE found in both InTouch 10.0 and System Platform 3.0 provides powerful multi-user features, check-out and check-in of objects and symbols under development, and graphical feedback to developers of significant changes by team members.

The ArchestrA IDE provides access to rapid propagation of changes throughout an application and even across multiple networked PC nodes.

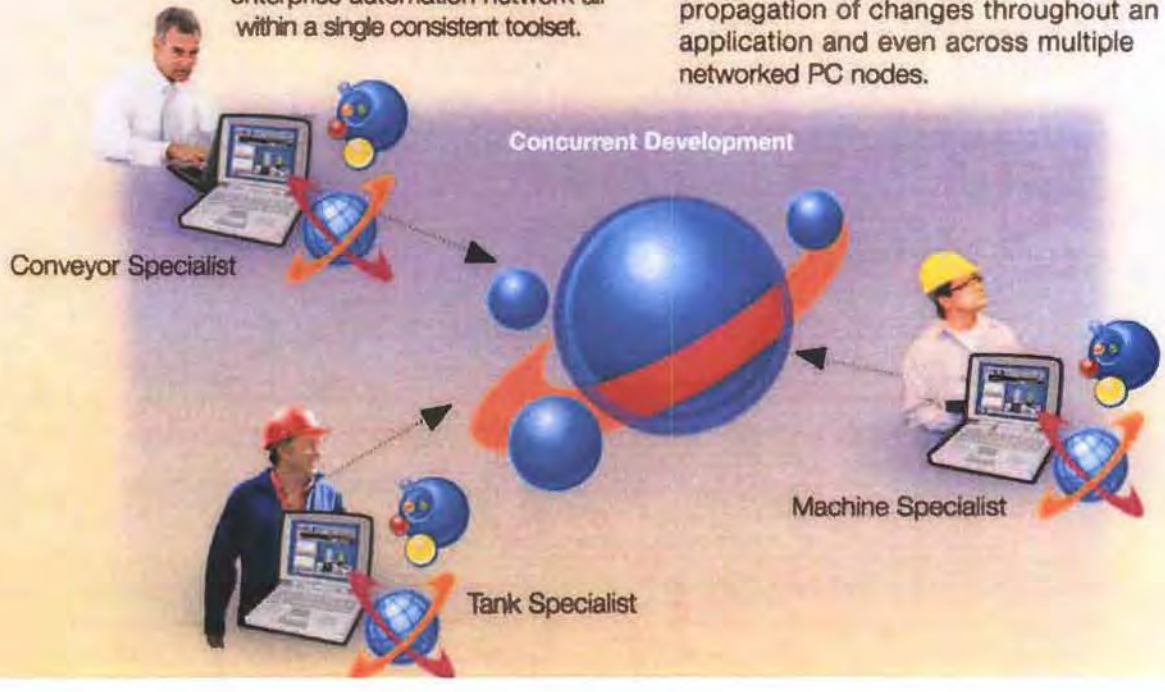

Wonderware InTouch 10.0 Graphical Editing Environmen

Comprehensive graphic toolbox unleashes your creativity.

Every graphic element and sub-group is individually editable providing tremendous control of your graphics with absolute ease.

Actionable Intelligence

Knowledge is power; and sophisticated, intelligent and interactive graphics that accurately communicate the right information are the key to this knowledge.

Powerful, intelligent graphics capabilities provide context to data, enable faster analysis, and facilitate better and more rapid understanding of displayed information.

Operators are presented the right information, at the right time, and in the right format. This empowers you to make timely, informed decisions, take corrective actions to reduce costs and operational incidents, and improve productivity across the entire operation.

You will be able to take advantage of robust, reliable, consistent HMI solutions with clutter-free screens and intelligent size-scalable faceplates.

InTouch 10.0 data aware controls, intelligent graphical objects and built-in provision of quality information, plus robust .NET controls give you intuitive, accurate and consistent visualization of operational processes making you more productive, efficient and effective.

Dynamic symbol scaling, "Tooltips" and "mouse-over" capabilities enable you to obtain more information, more quickly about operational conditions in streamlined, uncluttered screens that provide focus to the task at hand.

Great multi-monitor support enables you to construct comprehensive multi-screen HMI applications with precise control of visualization and interaction

Great multi-monitor support enables you to construct comprehensive multi-screen HMI applications with precise control of visualization and interaction.

Connect and Collect

InTouch 10.0 software can connect to virtually any industrial automation and information system and devices using hundreds of available I/O and OPC servers that are designed to work with Wonderware products.

The InTouch 10.0 HMI is capable of serving as an OPC client or an OPC server, and Wonderware servers provide access to InTouch 10.0 application data through:

- **OPC technology**
- **Wonderware's SuiteLink protocol**
- **Microsoft DDE communications**

Third-party developers also can use the ArchestrA DA Server toolkit to create additional servers that incorporate one or all of the communication methods listed above.

IT Friendly, Manageable, Secure, Extensible, Industry Standard

InTouch 10.0 software makes it easier, more time efficient and less costly for you to manage HMI applications in larger deployments.

InTouch 10.0 is IT-friendly with a centralized application management environment, a robust centralized security model, extensibility capabilities and built-in diagnostics.

InTouch 10.0 is easy to manage, secure and support with its data aware controls featuring built in primitives for data security, quality, and status as well as support for .NET 3.0 controls, support for Terminal Services, Office 2007 and Microsoft Vista.

InTouch 10.0 HMI gives you flexibility with support for existing InTouch HMI applications alongside new graphics so you can upgrade one node at a time at your own pace.

InTouch 10.0 enables you to utilize industry-leading standards, as well as adopt your own internal standards, which can be used throughout your operation, ensuring consistency, minimizing customizations and reducing the risk of unplanned incidents.

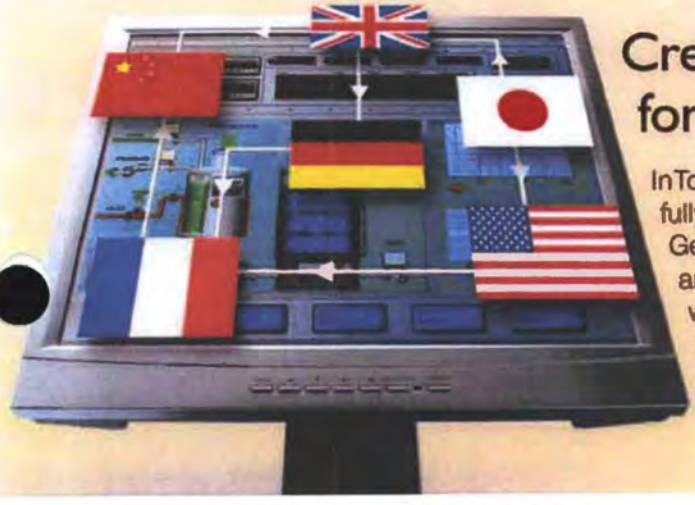

Create International Applications for Global Use

InTouch 10.0 software is fully supported in English, German, French, Japanese and Simplified Chinese, with additional languages available and supported around the world by local distributors.

Support for UTC time, local time, time offsets, and daylight savings time greatly simplify the task of creating global applications.

InTouch 10.0 software leverages Microsoft Tablet PC features such as inking and annotation enabling you to write values and notes in your own handwriting.

Breakthrough Architecture — No Limits

Used together, the InTouch 10.0 HMI and Wonderware System Platform 3.0 provide an information and automation application environment of unprecedented power, scalability and ease of use; significantly greater than the sum of the parts.

The integration of the ArchestrA IDE and the new graphics capabilities of InTouch 10.0 provide a smooth upgrade path for InTouch software users into the world of ArchestrA applications and the Wonderware System Platform 3.0. The upgrade path offers users the benefits of scalability and increased functionality without sacrificing prior investments in InTouch HMI application development.

While the Wonderware System Platform 3.0 is not required to run InTouch 10.0 software, it's the ultimate add-on for InTouch software that will redefine your expectations for a supervisory system:

- **ArchestrA Graphics and Application Objects** – the powerful component objects within the System Platform 3.0 encapsulate InTouch 10.0 ArchestrA graphics along with application logic, I/O, history and data storage, enabling drag-and-drop solution engineering. This is an incredible time saver, which also improves the consistency and maintainability of applications.
- **Common Plant Model** – moves beyond the simple tag databases of traditional HMI's. As a logical representation of physical equipment and processes, the common plant model of the Wonderware System Platform 3.0 abstracts equipment and systems into a more powerful and productive application development environment with extensive benefits for engineering reusability and reduced lifecycle cost.
- **Managed Applications** – enable easy and robust remote application deployment and management from a centralized environment, with change propagation across your entire network.
- **Extensible Universal Application Platform** – builds on the rich graphic capabilities of InTouch 10.0 HMI to extend into all types of plant and industrial applications.
- **Automatic Configuration of System-Wide Functions** – so that information is configured once centrally, and can be re-used for any application that needs it, including graphics, history, alarm and event functions, security, logic, scripting, inputs and outputs.
- **Common Namespace** – in the Wonderware System Platform 3.0, it separates application code from device communications so both can be easily managed and updated, allowing re-use on any machine or application.
- **Extended Data Security and Status Indication** – builds on the capabilities inherent in InTouch software. The Wonderware System Platform 3.0 extends the level of granularity in the definition and response for data security and status indication in a system.
- **Wonderware Production & Performance Management Modules** – provide a comprehensive set of functional modules that can extend the Wonderware System Platform 3.0 to fit any production or performance management need. These modules help customers optimize equipment operations and performance, improve manufacturing quality, enforce manufacturing and batch execution as well as integrate plant application to enterprise systems.

World-class Customer Support & Services

Wonderware's Customer Support Services Program makes it easy to learn, stay current, gain access to best practices and get assistance from the leading support team in the industry. This program includes access to our extensive online knowledge base center, security center, and web based training. To learn more about this valuable program contact your local sales representative.

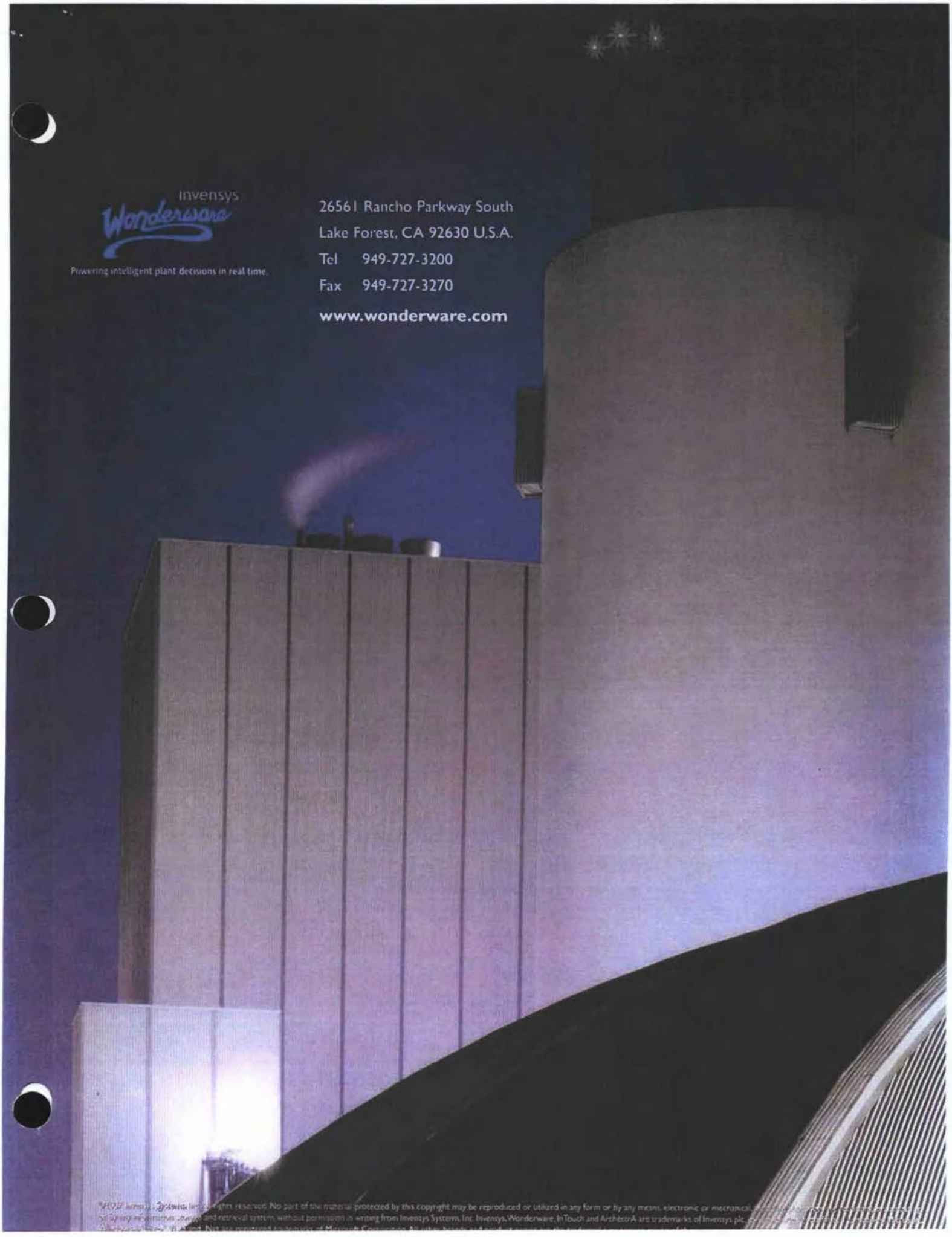

©2007 Invensys Systems, Inc. All rights reserved. No part of the material protected by this copyright may be reproduced or utilized in any form or by any means, electronic or mechanical, including photocopying, recording, storage in an information retrieval system, or otherwise, without the prior written permission of Invensys Systems, Inc. Invensys, Wonderware, InTouch and ArchestrA are trademarks of Invensys plc, its subsidiaries and affiliates. All other brands may be trademarks of their respective owners.

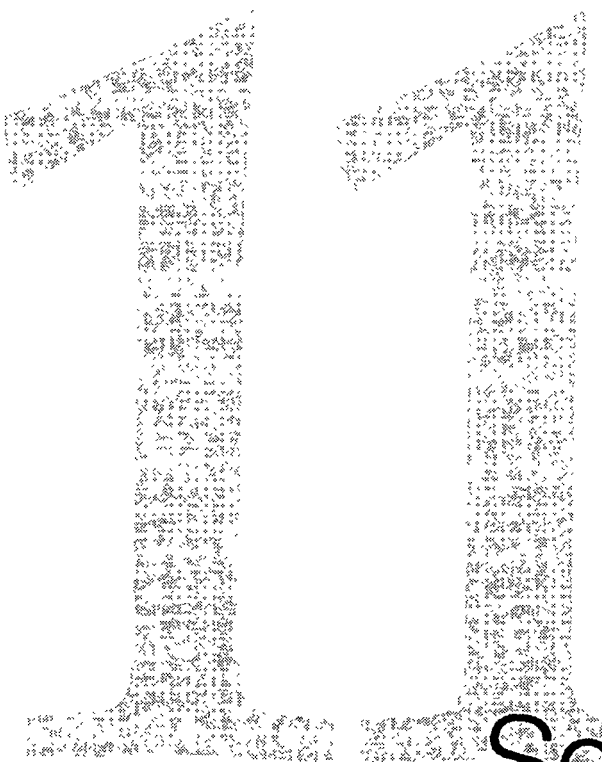

Section Eleven

Verbatim™

Owner's Manual

SINCE 1948

RACO

REMOTE ALARMS AND CONTROLS

Warranty

RACO Manufacturing and Engineering Co. Inc., Emeryville, California warrants this product to be in good working order for a period of five years from date of purchase as a new product. In the event of failure of any part(s) due to defect in material or workmanship occurring within that five year period, RACO will, at it's option repair or replace the product at no charge for parts or labor.

Any alteration of the product without instruction from RACO's Engineering Department will automatically void this warranty. If alterations of the unit are authorized by RACO, please complete the authorization form in the Owners Manual and return the form to RACO to ensure the warranty. Under no circumstances will RACO be responsible for consequential or secondary damages.

The defective product should be returned, insured and freight prepaid, securely packaged to the address listed below. Please include a copy of your sales receipt, the dialers serial number, and a detailed description of the problem you are experiencing.

RACO Manufacturing and Engineering Co. Inc.
Service Department
1400 62nd Street
Emeryville, CA 94608

Copyright

© RACO Manufacturing and Engineering Co., 1993. All rights reserved. No part of this manual may be reproduced, stored in a retrieval system, or transmitted in any way including, but not limited to photocopy, photograph, or electronic media without the written permission of RACO Manufacturing and Engineering Co.

Disclaimer

Every effort has been made to ensure the accuracy of this document. However, RACO Manufacturing and Engineering Co. assumes no responsibility for its use or any third party action as that may result from its use.

Trademarks

Verbatim is a trademark of RACO Manufacturing & Engineering, Co.
RACO is a registered trademark of RACO Manufacturing & Engineering, Co.

Printing History

Printed in USA, June 1993, June 1994, January 1996
Firmware version 2.09
RACO Manufacturing & Engineering, Co.
1400 62nd Street, Emeryville, CA 94608
(510) 658-6713
1-800-722-6999
FAX # 1-510-658-3153

Table of Contents

1 Overview

1.1 Product Description 1-1
1.2 Manual Description 1-2
1.2.2 Conventions 1-2

2 Installation

2.1 Location and Mounting 2-1
2.2 Wiring 2-1
Electrical Connection Diagram For Dry Contact Inputs 2-3
2.3 Installing the Parallel Printer 2-4
2.3.1 Installing the Printer Cable 2-4
2.3.2 Load Paper and Place Printer On line 2-5
2.3.3 Programming Time and Date 2-5
2.3.4 Printout at Regular Intervals 2-6
2.3.5 Turning Off the System With a Printer 2-7

3 Programming and Testing

3.1 Starting Up and Clearing the Unit 3-1
Front Panel Keys and Indicators Diagram 3-2
3.2 Programming Phone Numbers 3-3
3.3 Programming Input Channels 3-3
3.4 Initial Testing 3-5

4 Recording Voice Messages

4.1 Planning Messages 4-2
4.2 Managing Available Speech Memory 4-2
4.2.1 Verifying/Extending Recording Time 4-3
4.3 Record Your Messages 4-4

5 Using Your Verbatim Autodialer

5.1 Placing Inquiry Calls to the Verbatim Autodialer 5-1

5.2 CHECK STATUS Inquiry at Panel 5-1
5.3 Receiving Alarm Calls 5-2
5.4 Continued Dialing in the Absence of Acknowledgment 5-3
5.5 Acknowledging the Alarm Call 5-4
5.6 Alarm Reset Timeout After Acknowledgment 5-4
5.7 Programming by Phone 5-4
5.8 Dialing Out and Conversing Through the Verbatim Autodialer 5-6

6 Advanced Programming

6.1 Program Codes 6-1
6.1.1 Notes for Programming Code Table: 6-2
Programming Code Table 6-3
Programming Operations 6-10
6.2.1 Channel Status Reading 6-10
6.2.2 Message Recording and Reviewing 6-10
6.2.3 Channel Programming (Configuring) 6-11
6.2.4 Run Time Meter Programming 6-12
6.2.5 Pulse Totalizer Function Programming 6-12
6.2.6 Alarm Trip Delays 6-13
6.2.7 Phone Numbers and Pulse/Tone Dialing 6-14
6.2.8 Enhanced Telephone Interface Features 6-16
6.2.9 60 Digit Phone Numbers 6-17
6.2.10 Telephone Line Fault Detection (Phone Fault) 6-17
6.2.11 Automatic Tone/Pulse Selection 6-18
6.2.12 Call Progress Monitoring (CPM) 6-19
6.2.13 Alarm Call Grouping 6-21
6.2.14 Alarm Ready Scheduling 6-22
6.2.15 Local Data Logging Programming Codes 6-22
6.2.16 Analog Input Programming 6-22
6.2.17 Remote Supervisory Control 6-22
6.2.18 Data Acquisition/Central Data Logging 6-22
6.2.19 Miscellaneous Programming Tips 6-22
6.2.20 Program Clear Out Operations 6-27
6.2.21 (940) Diagnostic Readouts 6-28

7 Using the Alarm Ready Schedule Feature

7.1 Definition 7-1
7.2 General Descriptions 7-1
7.3 Alarm Ready Schedule Modes 7-3
7.4 Weekday Schedule Mode 1 7-4

7.5 Weekend Schedule Mode 2 7-4
7.6 Holiday Schedule Mode 3 7-4
7.7 Alarm Ready Schedule Priorities 7-5
7.8 Programming Alarm Ready Schedule Parameters 7-5
7.9 Starting the Real-Time Clock Chip, Time and Date Setting 7-6
7.10 Setting Alarm Start & Stop Times 7-7
7.11 Enabling the Alarm Ready Schedule Feature 7-8
7.12 Factory Defaults 7-9
7.13 Weekday and Weekend Alarm Ready Schedule Programming Example 7-10

8 Maintenance, Testing, and Battery Replacement

9 Troubleshooting Tips

9.1 What's The Problem? 9-1
9.2 Phone Support Procedures 9-4
9.3 Returning Parts to Factory 9-4

A Verbatim Series DFP Autodialer

A.1 Programming the Series DFP from a Remote Telephone A-1
A.2 Programming and Testing A-4
A.2.1 Resetting (Clearing) the Unit A-4
A.2.2 Programming Phone Numbers A-5
A.2.3 Programming Input Channels A-5
A.2.4 Initial Testing A-5
A.3 Recording Messages In Your Own Voice A-5
A.4 UsingYour Programmed Verbatim Autodialer A-6
A.5 Remainder of the Manual A-6
A.6 Enhanced Telephone Interface Features A-7

B Analog Signal Input

B.1 Analog Connections B-1
B.1.1 Programming for Analog Channels B-1
B.1.2 Assignment of Input Channel Numbers B-2

B.1.3 Programming the Input Signal Type B-2
B.1.4 Programming the Scaling and Offset Factors B-3
B.1.5 Additional Perspective on Scaling Factors B-4
B.1.6 Programming High and Low Analog Setpoints B-8
B.1.7 Summary of Analog Programming Codes B-9
B.1.8 Recording Speech Messages for Analog Channels B-9
B.1.9 If Analog Inputs Do Not Work Correctly B-11
B.1.10 Troubleshooting Analog Grounding Problems For Verbatim Analog B-11

C Remote Supervisory Control Output

C.1 Remote Supervisory Control (VRSC) Output Installation and Operation Instructions C-1
C.1.1 Mounting and Wiring Connections for Remote Supervisor Control C-1
RSC Supervisory Remote Control Output Box Diagram C-2
C.1.2 Optional Direct Connection Without Use of Output Relay Enclosure C-3
C.1.3 Remote Supervisory Control Operation C-3

D Printer Options

D.1 Local Data Logger (Local Printer) Option D-1
D.1.1 Serial Printer Interface D-1
D.1.2 Parallel Printer Interface D-1
D.1.3 Time and Date Setting D-2
D.1.4 Printout at Regular Intervals D-2

E Data Acquisition/Central Data Logging

E.1 Return To Normal (RTN) Calling E-1
E.2 Quick Intercall Delay & SCADA Units Connected to Cellular Phones E-2
E.3 Acknowledgment Calls To The SCADA Central Station E-3
E.4 Modem Automatic Speed Select for SCADA Units E-4
E.5 Modem High Speed or Low Speed Selection E-4
E.6 Number of Data Call Attempts Before Tripping a Communications Alarm E-5
E.7 Answer Mode - VOICE ONLY or DATA-TO-VOICE E-5
E.8 DATA/VOICE Autocall Calls for SCADA & Central Data Logger E-6

F MODBUS Interface

F.1 Overview F-1
F.2 General Operation F-2
F.2.1 Associating a Remote Channel with a PLC Data Register F-2
F.3 Connecting to the PLC Network F-3
Electrical Connection Diagram for PLC Network Connection F-4
F.3.1 Before Calling Technical Service Assistance F-5
F.4 Programming for Remote Channels F-5
F.4.1 Remote Channel Programming Overview F-5
F.4.2 Associating a Net Address with a Remote Channel F-6
F.5 General MODBUS Requirements F-7
F.6 PLC Address Format F-8
F.7 Potential Effects of Network Communications Failures F-8
F.7.1 Abbreviations and Typographic Conventions F-9
F.8 Remote Channel Status, Reading, and Writing F-10
F.9 Remote Channel Message Recording and Reviewing F-11
F.10 Remote Channel Configuration F-12
F.10.1 Assigning PLC Net Addresses to Remote Channels F-12
F.10.2 Remote Channel Alarm Criteria F-13
F.10.3 Linking Remote Channels to Phone Numbers F-14
F.11 Alarm Trip Delays F-14
F.12 RC Linking/Network Bridging F-15
F.12.1 Linking Modes F-15
F.12.2 Commands & Limitations F-15
F.13 Communications Parameters F-17
F.13.1 Serial Port Parameters F-18
F.13.2 Network Parameters F-18
F.13.3 Timing Parameters F-18
F.14 Miscellaneous F-19
F.15 Clear-Out Operations F-19
F.16 Diagnostic Readouts F-20
F.17 Status, Diagnostic & Error Code Listing F-22
F.17.1 Network Status Codes F-22
F.17.2 Diagnostic & Communications Error Codes F-23
PLC Programming Code Table F-25

G Cabling Diagrams

G.1 *RACO VSER-01 Serial Cable Connection Diagram* G-2
G.2 *RACO VPPC-1 Parallel Cable Connection Diagram* G-3

G.3 *Verbatim PLC Network Connections Diagram* G-4
G.4 *RACO VMB-2 Serial Cable Connection Diagram* G-5
G.5 *RACO VMBM-1 Serial Cable Connection Diagram* G-6
G.6 *RACO VBB-1 Serial Cable Connection Diagram* G-7
G.7 *VTI 405/505-DCM Serial Cable Connection Diagram* G-8

H Verbatim Floobydust

H.1 Adjusting Internal Speaker Volume H-1
H.2 External Speaker Connections H-2
H.2.1 Specifications for Audio Output from Jack AJ1 ..... H-2
H.3 Alternative Power Sources H-3
H.3.1 Standard DC Power Power Specifications H-3
DC Power Connection Diagram H-4
H.4 Speech Recording Times H-5
H.5 PBX Support H-6
H.5.1 Cautionary Notes About Interfacing to PBXs H-6
Local Alarm Relay Option H-7
H.6.1 Local Alarm Relay Configuration H-7
Line Seizure Option H-8
H.7.1 Line Seizure Installation H-9
Wiring the RJ-31X Line Seizure Jack Diagram H-10
H.8 Heater / Thermostat Option H-11
Heater/Thermostat Mounting and Wiring Diagram H-12
H.9 Connecting to a Radio Transmitter H-13
TS2 Connection Diagram H-15
Jumper Wires For RF Link Diagram H-15
H.10 Calling a Pager H-16
H.10.1 Introduction H-16
H.10.2 General Programming Considerations H-16
Case 2: Pager Calling Sequence Using Delays (Example 1) Diagram H-20
Case 2: Pager Calling Sequence Using Delays (Example 2) Diagram H-20
Cellularm Cellular Communications Diagram (AC) H-21
Cellularm Cellular Communications Diagram (12V DC) H-22
Cellularm Cellular Communications Diagram (24V DC) H-23
Verbatim Enclosure Diagram H-24
NEMA 4X Enclosure Diagram H-25
Motherboard Component Diagram H-26
Jumper Block Diagram H-27
H.11 Jumper Configurations H-28

I Verbatim™ Series VSS Autodialer Specification

I.1 Description & Phone Number Dialing I-1
I.2 Solid State Voice Message Recording and Playback I-1
I.2.1 User Field Recorded Messages I-1
I.2.2 Permanent Resident Non-Recorded Messages I-2
I.3 Local & Remote Programming Capabilities I-2
I.4 Nonvolatile Program Memory Retention I-3
I.5 Acknowledgment I-3
I.6 Remote (PLC) Channel Monitoring Function I-3
I.7 Input Monitoring Function I-4
I.8 Run Time Meter Inputs I-4
I.9 Pulse Totalizer Inputs I-4
I.10 Alarm Message I-4
I.11 Communications Protocol I-5
I.12 Diagnostics I-5
I.13 Speakerphone I-5
I.14 Inquiry Message and Function I-5
I.15 Power Battery Backup I-5
I.16 Phone Line I-5
I.17 Local Data Logging I-6
I.18 Public Address Broadcast I-6
I.19 Integral Surge Protection I-6
I.20 Warranty I-6
I.21 Modular Upgrades I-6
I.22 Additional Features: Sealed Switches, LED Indicators, Alarm Disable Warning, TalkThrough I-7
I.23 Special Order Items I-7

J Worksheets

Worksheet A Programming J-2
Part 1: Phone Number Programming J-2
Part 2: Optional Programing J-2
Worksheet B Alarm Call Grouping Programming J-3
Part 1: Group Description Naming J-3
Part 2: Linking Channels To Groups J-4
Worksheet B Alarm Call Grouping Programming Cont. J-5
Worksheet C Message Planning & Recording J-11

K Annunciator Sequences and Options

K.1 Standard Annunciator Sequence (Manual Reset) K-2
K.2 Clear On Return To Normal (Automatic Reset) K-3
Report Return To Normal (Ringback) K-3
K.4 Annunciator Sequence Option Summary K-5

Glossary
Index
FCC Notice to Users
Warranty Registration Card
Response Card

1 Overview

1.1 Product Description

The Verbatim™ autodialer functions as a remote alarm monitor, typically monitoring critical facilities which are not staffed 24 hours a day.

The Verbatim autodialer may be factory configured for different input and output configurations. Your Verbatim may have as many as 32 discrete inputs, 16 analog inputs, 8 digital outputs and 96 Remote Channels. The minimum configuration of the Verbatim autodialer monitors 4 internal input channels.

The internal inputs are sometimes called Physical Channels (PCs). PCs monitor user-supplied external sensors such as float switches, limit switches, etc. Sensors connected to discrete inputs are usually dry (non-powered), isolated contacts which close or open to indicate the sensed condition. In most cases, the outputs of logic controllers may be connected directly to Physical Channel inputs without the need for interfacing relays or other signal conditioning.

Remote Channels (RCs) do not directly connect to sensors. RCs monitor PLC I/O and data table locations as defined by the user. RC data is kept current by the Verbatim constantly making queries to PLC data registers over the industrial network connection.

An alarm condition can be indicated by change at a sensor, by new data from a Remote Channel (RC), or by loss of AC power. When an alarm occurs, the Verbatim accesses the standard phone line to which it is connected, dials the appropriate phone numbers and delivers the user's own pre-recorded voice message corresponding to those particular alarm conditions that are currently active.

Dialing continues repeatedly through the entire list of up to 16 programmed phone numbers, until the alarm is acknowledged by touch tone command or by calling the Verbatim autodialer back.

The Verbatim autodialer incorporates many flexible, voice-supported programming and message recording options, to meet a wide range of user requirements. Yet, in most cases, the user may rely on pre-existing default programmed parameters, greatly simplifying programming. Even default voice alarm messages are provided.

Note:

All user programming except access code and voice message recording may be entered, reviewed or changed either from the front panel or from a remote telephone at any time. Thus, installation and programming may easily be done by separate personnel at separate times.

Most programming is entered in the form of 3-digit codes as described in this manual. All user programming, including recorded messages, is maintained in permanent non-volatile memory.

The Verbatim autodialer incorporates extremely thorough and effective electrical surge protection and overall rugged construction, to deliver reliable operation under real-world conditions.

1.2 Manual Description

This manual guides you through the following procedures:

- Location and mounting
- Initial programming
- Configuring Remote Channels to monitor PLCs
- Voice message recording
- Using Your Verbatim autodialer
- Advanced programming

A glossary explaining the terms used in this manual is included the end of the manual, along with a troubleshooting guide, an index, a return authorization form, and FCC notice to users.

Worksheets are provided to document and clarify your programming and message recording steps.

Please take a moment to read, complete, and mail the warranty registration card at the back of this manual.

1.2.2 Conventions

Throughout this manual various icons are used to visually identify information. They are as follows:

- ◆ The solid diamond symbol shows a list of procedures, decisions, or single step tasks.
- The bullet symbol shows a list of items.

The bomb indicates a warning message. The information concerns process that may result in damage to equipment or harm to a person.

The hand indicates a caution message. The information concerns a process that may result in equipment failure.

The pencil indicates general information.

The open diamond pattern indicates one or more exceptions or special considerations for a process.

The phone indicates that you can access the Verbatim autodialer through your phone.

Other icons include button or keys on the Verbatim autodialer front panel.

"items in quotes"	Quotation marks indicate titles of sections and messages.
italic	Italic text indicates items for emphasis, message text, and sample text.
ALL CAPITALS	Capital letters reference the names of keys, lights, and LEDs.
Initial Capital Letters	Capitalization of the first letter of a set of words indicates mode and function types.

2 Installation

This section describes how to install the Verbatim autodialer and how to install a parallel printer to use the Parallel Printer Local Data Logging feature.

2.1 Location and Mounting

Choose a mounting location which is not exposed to condensing humidity or temperatures beyond the limits of 20°-130°F. This location should ideally be within 5 feet of a standard RJ-11 phone jack and a *grounded* 120 VAC power outlet.

1. Mount the Verbatim autodialer on centers of 6" x 11 3/8" using the external mounting ears on the enclosure. #10 or 3/16" bolt sizes are best.
2. Install the NEMA 4X weatherproof outer enclosure, (optional purchase).

   This allows the Verbatim autodialer to be mounted outdoors as long as temperature limits are not violated. It is best to provide at least an overhead shelter to minimize direct precipitation and solar heating effects.
3. Install the heater/thermostat for cold or humid environments, (optional purchase).

   The 120 VAC heater dissipates 75 watts, providing a temperature rise of approximately 30 degrees, or 60 degrees when enclosed in the optional NEMA 4X enclosure.

2.2 Wiring

Refer to the diagram on page 2-3 for an example of the wiring connections.

1. Inspect and remove any foreign materials which might create short circuits.
2. Connect the red (positive) battery lead to the positive terminal on the gel-cell battery.
3. Plug the power cord into a *grounded* 120 VAC *outlet.*

   Or, remove the power cord from the Verbatim autodialer and install well-grounded 120 VAC power to terminal strip TS3, located on the lower right of the main circuit board.

If there are any green grounding wires in place on TS3 originating from plug-in expansion cards, leave those green grounding wires in place on the terminal marked GRN (Green). If the Verbatim autodialer turns on when power is applied, turn it off with the red POWER ON/OFF key.

4. Connect dry (unpowered) contacts to the terminal strip connection points.

   The connection point for basic four-channel units is terminal strip TS1, located on the lower left of the main circuit board. Note that there are four common return terminals marked "C"; any combination of these internally grounded terminals may be used. Terminal strip TS1 may be unplugged for convenience. All terminal points are screw clamp type, eliminating the need for wire termination lugs.

   The contact input wires should ideally be light (18 to 24 gauge) signal wire rather than heavy power wire. This reduces problems of bulk and stiffness.

5. If your unit has 8 or more inputs, the VX32 Channel Expansion Card should be plugged into connector J4.

   If your unit has this card installed, then use TS1 for common return connections only, and connect one side of each contact to the appropriately marked channel input number on the VX32 card. Leave TS1 terminals 1,2,3 and 4 disconnected.

Notes:

- The common *return* side of the contacts will need to be consolidated into not more than four wires coming into the TS1 terminals marked "C".
- Route the wires to the VX32 card so that they do not protrude above the top of the card, other wise they will interfere with the front panel board when the door is closed.
- Terminal strip TS1, and the terminal strips on the VX32 card if any, are not removable terminal blocks. Be sure that the terminal strips do not become unplugged due to wires being stressed when the door is closed.

Caution:

NO 120 VAC INPUT CIRCUITS! Please verify that the circuits you connect to these inputs are "dry" (unpowered) and are ***not*** directly connected to 120 VAC power. Connecting such circuits will damage the unit.

Exception:

If your inputs are coming from a logic controller with TTL, CMOS or 5-volt DC logic outputs, direct connection may be made as long as the controller has the same electrical ground as the Verbatim autodialer.

Electrical Connection Diagram For Dry Contact Inputs

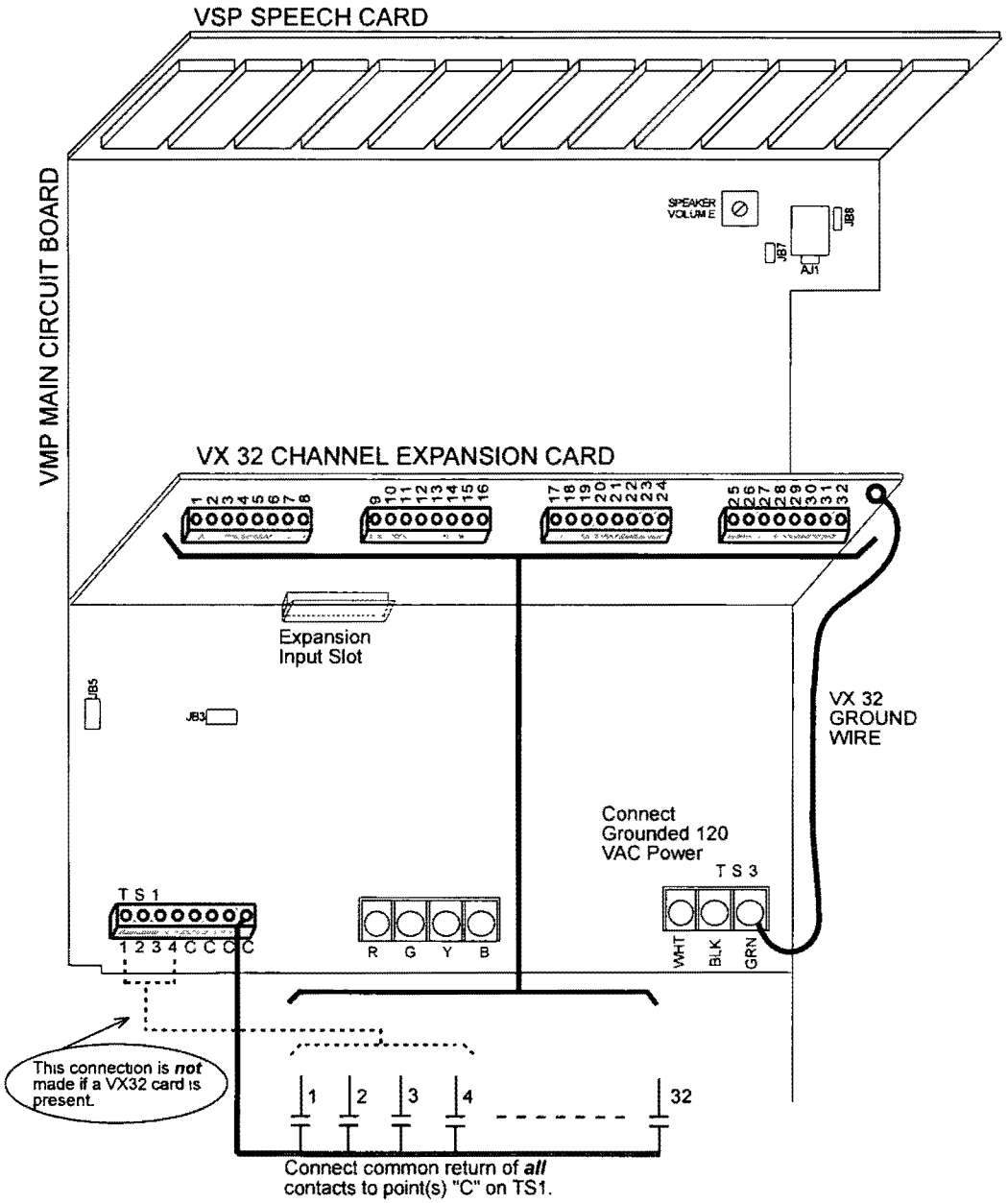

The common returns for all inputs are connected to TS1 terminals marked "C". These four "C" terminals are connected together and to electrical ground.

4 Channel Verbatim: Connect one side of each contact to the corresponding numbered terminals on TS1. The other side of each contact connects to the common return (the "C" terminals on TS1).

8 Or More Channel Verbatim: Connect one side of each contact to the corresponding numbered terminals on the VX32 expansion card. Connect the other side of each contact to the common return (the "C" terminals on TS1 of the main board). Note that TS1 terminals 1 through 4 are not used in this case.

2.3 Installing the Parallel Printer

The Verbatim Parallel Printer Local Data Logger feature will print reports on a local printer which is connected via a standard parallel interface. The local printer will automatically print out each action that occurs; e.g., alarms, acknowledgments, programming entries, inquiry calls, etc. You can cause a printout, upon command, at any time. Also, you may program the Verbatim for automatic printout of all input conditions at regular intervals. A time/date stamp will be included with each printed item.

You will need to:

- Connect the parallel printer to the Verbatim front panel using the RACO PPC-1 cable (or equivalent).
- Set the time and date so that each printout will be accompanied by the proper time and date stamp.

2.3.1 Installing the Printer Cable

Note:

If you ordered the Verbatim Parallel Printer Port Adapter Cable from RACO at the time you ordered your Verbatim autodialer it should already be properly installed. (The cable may be ordered from RACO using the part # VPPC-1.) You may also use an identically wired cable from a separate source. If you wish to acquire or fabricate the cable yourself, please refer to the, *"VPPC-1 Serial Cable Connection Diagram,"* in Appendix G.

The front panel circuit board must show a designation of VFP4 or higher. Also, the firmware version for the program chips U3 and U4 (on the main circuit board) must be V2.01 or higher. If your hardware does not conform to these revision levels contact your RACO Sales Representative about getting the proper upgrade modules.

The VPPC-1 cable attaches to the front panel circuit board where the mating pins protrude, just inside the front door of the Verbatim . Orient the connector so the cable's Pin 1 index (a red stripe on the cable or an arrow on the connector) is near the corner of the front panel board. The cable extends out of the Verbatim chassis and overlaps the lower chassis wall at the bottom of the chassis. When the front door of the Verbatim is closed the flat ribbon cable will be safely folded around the lower wall of the Verbatim chassis.

At the other end of the VPPC-1 cable is a standard "Centronics" style 36 pin connector. This 36 pin connector is the proper gender to mate with the data connector on the back of your parallel printer. However, if the printer cannot be located within the three-foot length of the VPPC-1 cable, install a standard

"Centronics" parallel printer extension cable (male on one end, female on the other). The extension cable extends from the end of the VPPC-1 cable to the printer.

Note:

The maximum length of the printer extension cable should be no greater than 10 feet. If you need to extend the printer greater than 10 feet from the Verbatim please consider ordering the RACO Serial Local Data Logger Option. Serial interfaces may be extended to a few hundred feet if necessary. Furthermore, if a serial interface is used together with special "line driver" devices, the printer cable may be extended for thousands of feet.

2.3.2 Load Paper and Place Printer On line

The printer must be properly loaded with paper and be on line in order for the Verbatim to print reports. (Some printers have a button labeled "select" rather than "on line.") If the printer runs out of paper or is taken off line, printing will cease immediately. A limited amount of printout data can be saved in the Verbatim internal print buffer while the printer is off line or out of paper. The size of the Verbatim printer buffer depends on several factors such as which Verbatim options are configured (i.e., analog, RSC, PLC interface, etc.). If the printer is off line or out of paper, printout data is sent to the Verbatim buffer each time it would otherwise be printed on the printer. Once the amount of data sent to the buffer exceeds the size of the buffer, printout items will continue to be copied to the buffer but will begin to overwrite buffered data. The printer buffer "wraps" around and new printout data is copied over the oldest printout data.

It is possible that no data will be lost while your printer is out of paper or off-line if you manage to restore the printer to operation before the Verbatim buffer "wraps." Then as soon as the printer is restored to operation, the Verbatim sends the buffered reports to the printer. (Note that the date/time stamp eventually printed will show the time and date of the event; not the time and date of the printing activity.)

2.3.3 Programming Time and Date

Time and date may be entered or changed with the following programming code entries:

- To check the date:

  `9 4 1 ENTER`

- To set the date:

  ```
  9 4 1 MM DD YY DW ENTER
  ```

MM is the month (01 for January, etc.), DD is the day of the month (07 for the 7th day of the month, YY is year (93 for 1993) and DW is the day of the week (1 for Sunday, 2 for Monday, etc.) Entry of the DW is optional.

- To check the time:

  ```
  9 4 2 ENTER
  ```

- To set the time:

  ```
  9 4 2  HH MM SS ENTER
  ```

HH are the hours in 24 hour format (13 for 1 PM), MM for minutes (don't forget the leading zeros) and SS is the seconds. Entry of SS is optional.

- To clear the time and date back to a default time and re-initializes the real-time clock chip:

  ```
  935 7 ENTER
  ```

Note:

The preceding operation should only be necessary if the real-time clock chip has been added or replaced in the field.

2.3.4 Printout at Regular Intervals

The Verbatim autodialer may be programmed to automatically log (print on the printer) all input conditions at regular intervals, by entering the following code:

```
943 XXX.X ENTER
```

where XXX.X is the desired printing interval in hours, from 0.1 to 999.9 The first such printout will occur when the period elapses, rather than immediately upon programming.

- To check the presently programmed printing interval enter the following code:

  ```
  943 ENTER
  ```

- To turn off the regular interval printing function enter the following code:

  ```
  943 0 ENTER
  ```

- To immediately print a record of all current user programming enter the following code:

  ```
  944 ENTER
  ```

2.3.5 Turning Off the System With a Printer

Some parallel printers tend to "leak" electrical current through the parallel interface into the Verbatim when it is powered off, resulting in the Verbatim not remaining turned off. It is possible that a few seconds after powering off the Verbatim it will turn itself back on again. To remedy this condition simply turn off the printer whenever turning off the Verbatim .

3 Programming and Testing

3.1 Starting Up and Clearing the Unit

Basic set-up and testing of the Verbatim involves:

- Program at least one phone number.
- Program the input channels to reflect alarm conditions.
- Test the alarm conditions to be sure witing and programming are correct.
- Record voice messages, trip delays and other programming as desired.

All programming operations must be done with the unit in the Program mode.

1. To put the Verbatim autodialer in the Program mode, press PROGRAM.
   Program mode is indicated by the lighted PROGRAM LED.

Note:

Before you begin programming the Verbatim for your monitoring application it is best to first clear the unit's memory of any old programming. This step also ensures that memory corruption, which might have occurred during shipment or due to anomalous power distrubances, will be wiped away. See Step 2 below.

Caution:

The following step erases all user programming including recorded messages so normally it is done only at initial start-up.

2. To clear the system memory, press:

   `9 35 9 ENTER`

   If you make an error in code entry, press CANCEL and start again.

Exceptions:

If you have powered up your Verbatim without connecting a live telephone line to the unit you may observe that the TFAIL indicator is on. This indicates that the unit is checking for the presence of a telephone connection and attempting to determine the line configuration. If you are planning to program your unit without a live telephone connection you may wish to disable the Telephone Line Fault Detection (Phone Fault) feature by pressing `9 17 0 ENTER`
See Section 6.2.6 for information on temporarily disabling this feature.

Front Panel Keys and Indicators Diagram

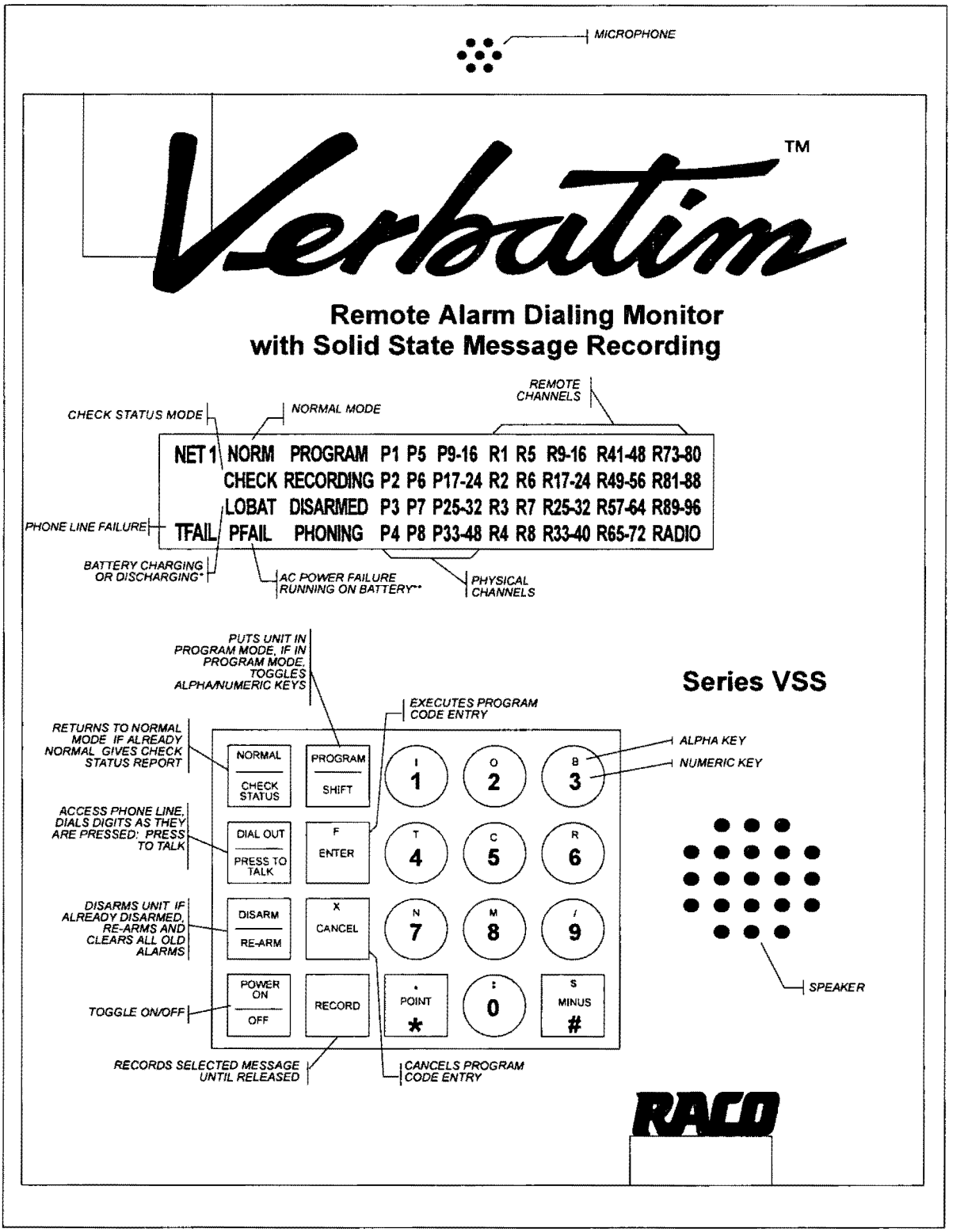

*** A discharged battery may take up to a day to fully charge. Meanwhile, light may remain on.**

**** During AC power failure, all illuminated LED's will flash to conserve battery power.**

3.2 Programming Phone Numbers

Refer to Programming Worksheet A (See Appendix J). You are encouraged to write down the phone numbers you want to program, along with a person's name for each phone number.

- To program the first dial-out phone number, press:

  `7 01 (then the complete phone number) ENTER`

  For example, to program 1 (510) 658-6713 as the first phone number, press:

  `7 01 1 5 1 0 6 5 8 6 7 1 3 ENTER`

- To program a second phone number:

  Use code 7 02 instead of 7 01, progressing to a maximum of code 7 16 for the 16th phone number.

Each number may be up to 60 digits in length. Be sure to include any necessary area codes or "1" prefixes.

Exceptions:

- To use touch tone dialing, press:

  `9 01 1 ENTER`

- To go back to standard pulse dialing, press:

  `9 01 0 ENTER`

- To insert delays between dialed digits.

  Press the MINUS key once for each additional delay desired in the phone number programming process. Default delay is one second.

- Refer to Section 6. "Advanced Programming," for specialized programming such as *grouping* phone numbers with input channels, *Call Progress Monitoring* phone fault detection, etc., or to establish and use a *call forward* phone number, etc.

3.3 Programming Input Channels

Your Verbatim autodialer needs to know whether its input channels are to be *normally closed* (alarm on Open Circuit), or *normally open* (alarm on Closed Circuit).

All contact inputs are initially set normally closed (i.e. they will alarm on Open Circuit). This is the default setting and, therefore, any open circuits, including any inputs left disconnected during installation, will appear as alarms until the inputs are programmed.

- To automatically program the inputs:

  Make sure all inputs are in their normal (non-alarm) state. Then press:

  `5 0 0 ENTER`

The Verbatim autodialer automatically examines all inputs and programs them to alarm on the opposite input state from their present status. This code 500 does not affect any channels that have been programmed for Disabled Channels, Status Only, Run Time Meter, or Pulse Totalizer function.

Exceptions

In most cases, no further programming of contact inputs is necessary. However, the following configuration options are available:

- To set any input to be disabled and never be annunciated, press:

  `5 ZZ 0 ENTER`

  where ZZ is the 2 digit channel number you are programming. Be sure to always use a leading 0 for channels 1 through 9 to keep the channel number a two-digit entry.

- To set an individual contact input for normally closed operation (i.e. to alarm on Open Circuit), press:

  `5 ZZ 1 ENTER`

- To set an individual contact input channel for normally open operation (i.e. to alarm on Closed Circuit), press:

  `5 ZZ 2 ENTER`

- To set inputs to report status only, program each individual channel as follows:

  `5 ZZ 3 ENTER`

  This setup never causes an alarm to dial out.

- To set contact inputs for the run-time meter function, program each channel as follows:

  `5 ZZ 4 ENTER`

See Section 6.2.3, "Channel Programming (Configuring)." This setup never causes an alarm to dial out but reports the total accumulated hours that the input contact is closed.

- To set any of your contact inputs for the Pulse Totalizer function, see Section 6.2.3, "Channel Programming (Configuring)."

3.4 Initial Testing

Perform the following steps to ensure that your Verbatim autodialer is properly installed.

1. First, temporarily disarm the unit by pressing:

   DISARM/RE-ARM until the DISARM LED is flashing. This prevents the unit from dialing out.

2. Next, physically trip each sensing device in turn (manipulate float switches, relays, etc.).

   Verify that the corresponding input channel LED lights at the front panel, and then restore all sensors to their normal state.

3. Now press DISARM/RE-ARM. This will clear out the channel input LEDs and restore the unit to a ready condition.
4. To test the phone line connection, with the unit's phone cord plugged into its phone jack, temporarily remove the AC power cord to the unit.

   The PFAIL LED will illuminate. At this point all illuminated LEDs will flash on and off in order to conserve battery power. Since the unit is not disarmed this time, after a 0.1 minute Alarm Trip Delay the PHONING light will illuminate and the unit will access the phone line and will begin dialing the first phone number.

   The unit will recite its station ID and power failure messages. You may converse with the person answering by pressing and releasing DIALOUT/ PRESS TO TALK. Press this key again when you wish to speak, and release this key to listen. This action will suspend message recital. In this case, when the conversation is done, you should end the call by pressing NORMAL. Ordinarily the alarm call would end automatically.

5. Now press DISARM/RE-ARM twice.

   This step disarms and then rearms the unit clearing all acknowledged alarms. This clearing also occurs automatically after the Alarm Reset Time has elapsed (default value 1 hour). See Section 5.6, "Alarm Reset Time-out After Acknowledgment."

6. Your Verbatim autodialer is now able to operate, having at least one dialout phone number programmed and having its input channels configured.

   However, you may wish to record your own voice messages (see the next section) or perform special advanced programming items (see Section 6, "Advanced Programming") before referring to Section 5, "Using Your Verbatim autodialer."

4 Recording Voice Messages

This chapter describes how to record your own voice messages. Messages may be recorded for the Station ID and for the Alarm and Normal condition for every channel in your Verbatim autodialer.

Note:

Be sure to complete the programming of the input channels as described in the previous chapter before recording any messages.

Using Default Messages Instead of Recording Your Own.

Recording messages is an optional step. Your Verbatim autodialer comes with built-in default normal and alarm messages for all channels. Recording voice messages can be postponed until you have become more familiar with your unit. You may even choose to record or re-record your own messages from a remote telephone at any time.

Using default messages for selected channels or for the Normal condition of channels is an excellent way to conserve speech memory for certain important and lengthy alarm messages.

Types of Default Messages

- Discrete (i.e. digital, contact) physical channel inputs:

  "Channel N Normal" and "Channel N Alarm."

- Discrete remote channel inputs:

  "Remote Channel N Normal" and "Remote Channel N Alarm."

- Discrete Status-only or Run-time meter physical channel inputs:

  "Channel N is ON" when input circuit is closed, and "Channel N is OFF" when input circuit is open.

- Discrete Status-only remote channel inputs:

  "Remote Channel N is ONE" or "Remote Channel N is ZERO."

- Analog (integer) physical or remote channel inputs:

  ["Channel N, present reading is ..."] followed by the recited analog value.

- Station ID message:

  "ID Number N."

There is also a default Network ID message. See Appendix F for details.

4.1 Planning Messages

Worksheet C in Appendix J is provided to assist you with this. Please use the Worksheet! Not only will you then have a written record of your messages for future reference, you will also then be prepared to record your messages with the greatest ease and efficiency.

In general, two different messages are used for each input channel:
One message for the Normal Condition, and another for the Alarm (fault) Condition.

When you have written down the messages that you want to record, you are ready to verify/extend your recording time.

❖ ***Exceptions:***

- Status-only or Run-time Metering Channels. See Section 6.2.3, "Channel Programming (Configuring)."

  To record your own messages for these specially configured channels rather than relying on the default "Channel N is ON" or "Channel N is OFF" messages:

  - Plan a message for the Closed Circuit condition and another message for the Open Circuit condition for each channel.

  For Run-time channels, the unit will add a report of the run-time in hours, using built-in speech, after the Closed or Open Circuit message.

- Pulse Totalizer Channels

  See Section 6.2.3, "Channel Programming (Configuring)," for special guidance in planning Pulse Totalizer messages.

4.2 Managing Available Speech Memory

The table below shows the total available message recording time for units with differing total number of channels. The available message recording time may be extended in two ways. First, you may explicitly change the recording rate from the default Rate 1 to Rates 2, 3, or 4 (See Section 6). Secondly, you may automatically extend the message recording time by using the Autoextend™ feature described in this section.

Unit type	Initial recording time (at Rate 1):	Extendable to: (Rate 2, 3 or 4)
4-8	26 sec	40, 54 or 79 sec
16-32	104 sec	160, 216 or 318 sec
33-40 chan. unit	130 sec	200, 270 or 399 sec
41-48 chan. unit	156 sec	240, 324 or 476 sec
49-56 chan. unit	182 sec	280, 378 or 555 sec
57 or more	208 sec	320, 432 or 624 sec

4.2.1 Verifying/Extending Recording Time

Initially, the unit is set for the fastest memory use rate ("Rate 1"), giving the highest fidelity sound recording. If you are sure that your messages take less than the "initial" time shown above for your unit (14 seconds total for a 4-channel unit), go to Section 4.3, "Record Your Messages." You may also verify your unit's current rate setting and corresponding total message recording time by pressing:

```
9 1 1 ENTER.
```

If, after performing this step, you think you may need more recording time perform the Autoextend™ step described next. The Autoextend™ feature will automatically extend the available recording time, selecting the optimum recording rate (speech memory rate) to give you the highest possible recording sound quality for your length of recording.

Warning:

The following step will erase any existing recorded messages.

To use the Autoextend™ feature to extend recording time, have your message Worksheet handy as you press:

```
9 1 2 ENTER
```

The Verbatim autodialer will prompt you to immediately begin reciting your entire list of messages at the sound of the beep, one after another, at the same speed that you will want to later record them.

During this time, the Verbatim autodialer will *not* be recording your spoken messages. Instead, it will be timing you.

When you have finished reciting (not recording) the last message, immediately press ENTER.

Over the phone, press ZERO to start the timing, and ZERO again to end the timing. See Section 5.7, "Programming by Phone."

Based on how long your message recital took, the Autoextend feature will automatically calculate which recording rate is optimum for your length of recording time, and will then automatically select that rate. It will tell you how many seconds your message took, and how much total recording time it has now given you.

4.3 Record Your Messages

First, minimize any background sounds. Then proceed as follows:

- Have your message Worksheet in front of you and be prepared to recite the first Alarm (fault) Condition message in a loud clear voice within about 6 to 12 inches of the microphone located at the top of the front panel. Press:

  `1 ZZ ENTER`

  where ZZ is the appropriate 2-digit channel number, such as 01 for channel 1. Be sure to use leading zeroes, in order to keep ZZ a 2-digit entry. Use 00 for the Station ID message.

The voice specifically identifies the message you are about to record, and then prompts you to press the RECORD key and hold it just for the duration of your spoken message. Note that the RECORDING light comes on during recording.

Over the phone, since there is no RECORD key, the voice will prompt you to press ZERO to begin recording, and press ZERO again to stop recording. See Section 5.7, "Programming by Phone."

The Verbatim autodialer will immediately play back the message you have just recorded, allowing you to determine if you need to re-record it louder, softer or more clearly, etc.

Experiment with different volume levels to get the best message clarity. If there is too much background noise at the Verbatim autodialer site, record your messages over the phone.

Always stop the recording promptly to avoid wasting recording time.

- To record an alternate "Normal Condition" message for channel ZZ, press:

  `2 ZZ ENTER`

  and follow the same procedure as above.

- To review both existing messages for channel ZZ, press:

  `3 ZZ ENTER`

  The Verbatim autodialer will replay both existing messages for channel ZZ. This will include any default messages remaining in use.

Exceptions:

- For any channels programmed for "Status Only" or for Run Time Meter function, use code 1 ZZ for the Open Circuit message, and 2 ZZ for the Closed Circuit message.
- If you run out of recording time, you will hear the message "No more message time." See Section 4.2 above to re-establish total available recording time. You may elect to shorten some messages, or rely more on selected default messages, or you may Autoextend the available recording time. Then, re-record all messages.
- If you wish to extend the available time for a specific message while leaving the other messages unaffected, enter the code for recording that message, but add an extra digit 1 through 4, before pressing ENTER.

  The digit 1 (Rate 1) gives the shortest time and the best sound quality, while 4 (Rate 4) gives the longest time with poorest sound quality.

- If you wish to reinstate a default message, enter the code for recording that message, and an extra POINT before pressing ENTER. For example:

  `1 ZZ POINT ENTER`

- If you wish to use the default Station ID message but with a different ID number in place of the "one", press:

  `9 1 4 N ENTER`

  where N is the desired ID number which may be up to 16 digits long. Some users program the Verbatim autodialer's own phone number as its ID number.

- If you want to set a specific recording rate rather than letting Autoextend do it, press:

  `9 1 3 N ENTER`

  where N is the desired recording rate 1, 2, 3 or 4.

- You will then need to re-record any messages that were previously recorded at a different rate.

5 Using Your Verbatim Autodialer

5.1 Placing Inquiry Calls to the Verbatim Autodialer

You may call the Verbatim autodialer at any time from any phone. The unit will wait the programmed number of rings before answering and then will begin a full status report. The status report starts with the Station ID Message, followed by any special warning messages (e.g.: no phone numbers programmed, or the unit is disarmed, etc.), and concludes with the listing of the status of each channel input.

If there are no alarm conditions on any channel, then the Verbatim autodialer will say "All channels normal" just prior to beginning the complete channel status report.

If there are channels with unacknowledged alarms conditions prior to the call, placing a call to the unit will result in the acknowledgement of these alarms. The Verbatim autodialer will say "Alarm is acknowledged" immediately after reciting the Station ID message.

Exception:

The Call in Acknowledge Mode command (Code 925) may be used to set the Verbatim so that calls *to* the unit will not automatically acknowledge alarms.

The channel status report will be recited the programmed number of message repeats (default is 3 times). Between each recital the Verbatim autodialer will issue a prompting beep and then wait a few seconds for you to optionally enter a special Command Tone. See Section 5.7, "Programming by Phone." After all message repeats, if you have not entered a tone, the unit will say "Goodbye" and terminate the call.

See Section 6.2, "Programming Operations."

5.2 CHECK STATUS Inquiry at Panel

When the NORM LED is lit, you may hear a report of current conditions by pressing the NORMAL/CHECK STATUS key. You may cut this report short by again pressing the NORMAL/CHECK STATUS key.

5.3 Receiving Alarm Calls

When any input condition violates the programmed alarm criteria for an interval longer than the Alarm Trip Delay for that input (See Section 6.2.6), the unit goes into an Unacknowledged Alarm state. The unit begins dialing the first of up to 16 programmed phone numbers. See Section 6.1, "Program Codes," about optional Alarm Call Grouping if you want the numbers dialed to depend on which channel is in alarm. Whenever there is an Unacknowledged Alarm the corresponding channel alarm LED begins flashing.

The voice messages follow the same format as an inquiry call, including the prompting beep, except the channels having no alarm activity are not included in the alarm report. If there is no acknowledgment, the Verbatim autodialer will replay the message for the programmed number of repeats (default is 3) and then will say, "Goodbye," before terminating the call.

See Appendix I for information on alternate annunciator state models. Annunciator state models support various Return To Normal (RTN) calling sequences.

Phrases Appended to Alarm Messages

(user recorded or default)

These appending phrases will continue to be included in any status reports until the Alarm Reset time expires for that channel.

ALERT
Any channel with an input violation which has not been present longer than the Alarm Trip Delay for that channel will have its status message appended with the word "Alert."

NOW NORMAL
If the violation which originally caused the alarm has gone away the phrase "Now Normal" will be appeneded to the alarm status message.

ACKNOWLEDGED
Any channel which was in an unacknowledged alarm state but became acknowledged will have its status message appended with the word "Acknowledged."

NOW NORMAL, ACKNOWLEDGED
Any channel which is both acknowledged and whose input voilation has gone away will have its status messages appended with the phrase "Now Normal, Acknowledged."

Note:

When the autodialer goes into alarm, it dials each phone number in sequence until it receives an acknowledgement. The alarm may be acknowledged after the warble tone by pressing a touch tone "9"; by calling the unit back after it says, "goodbye," or by pressing NORMAL on the front panel. After acknowledgement, the dialer will not call out again on that channel until it is reset. This is usually done automatically after a set period of time called the *Alarm Reset Time*, which allows the person who acknowledged the alarm time to go fix the source of the problem without further callouts from the dialer. After the reset time, the unit is automatically reset, and any alarms present at that time will cause a dial out.

Exception:

Power Failure alarms only cause two spoken messages: *1)* When power has been off for longer than the Power Failure Trip Delay, "Power is Off" is reported. *2)* When power has been off and is later restored the message "Power is On" is reported.

5.4 Continued Dialing in the Absence of Acknowledgment

The Verbatim autodialer will then wait for the programmed Time Between Alarm Calls (default 2 minutes; See Section 6.2.12, "Miscellaneous Programming Tips," to change default time), during which you may call the Verbatim autodialer back to acknowledge the alarm. If no acknowledgment is received at the end of this period, the next phone number will be dialed. The process will be repeated indefinitely, repeatedly going through all the designated phone numbers, until acknowledgment is received.

Exception:

If you want further calling terminated when channels return to normal you may so program the unit by using the "Set Return to Normal" command (Code 923). See Appendix K.

ANATOMY OF AN ALARM

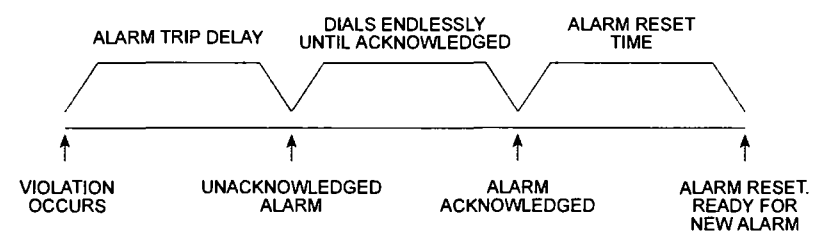

5.5 Acknowledging the Alarm Call

To acknowledge the alarm during the alarm call wait to hear the prompting "warble" tone then enter a touch tone '9' (Also 1, 2, 4, or 0 will acknowledge in this situation). The Verbatim autodialer will say "Alarm is acknowledged, Goodbye" and terminate the call. See Section 5.7, "Programming by Phone," for additional ways of acknowledging an alarm without ending the call.

Alternative methods of Acknowledging:

Wait for the alarm call to end then place a call to unit.

At the front panel press NORMAL, PROGRAM, DISARM, or DIALOUT .

Upon acknowledgment, the channel LED changes from flashing to steady illumination.

At the end of the Alarm Reset period the channel alarm LED turns off, the Acknowledged Alarm status is cleared for that particular channel input, and it is again ready to go into Unacknowledged Alarm whenever a violation occurs at that input. In particular, if a violation has not been removed (prior to timeout), dialing begins immediately upon the Alarm Reset period timeout. To reactivate the alarm before the alarm reset timeout period is over, re-arm the alarm.

5.6 Alarm Reset Timeout After Acknowledgment

As shown in the figure, "Anatomy of an Alarm," p. 5-3, when an acknowledgment is received, the Verbatim autodialer begins timing out the Alarm Reset Time, (default 1 hour).

Further calling on behalf of that channel is suspended, regardless of further activity at that particular input during this period. If new alarms occur on other channels during this period, the unit will go back into the Unacknowledged Alarm state and dial the first appropriate phone number, with dialing continuing until a new acknowledgment is received.

5.7 Programming by Phone

During any phone call (inquiry call or alarm call), at the end of each round of messages, the prompting warble tone is issued. If you press a Command Tone "1" at the sound of the warble tone, the Verbatim autodialer will prompt you to enter a program code. (Or, if you have established a Security Access Code, you will first be prompted for this code).

To enter programming codes over the phone:

- Enter a touch tone "1" after the warble tone.
- Enter the program code followed by # #.
- Enter an additional # # when you are ready to hang up.

You may enter codes for most of the programming operations described in this manual except reading or changing the optional security access code. See Section 6 for more information about the 910 Security Access feature.

Since some of the front panel keys are not found on a touch tone keypad, some special conventions apply for over-the-phone programming:

In Place Of:	Enter:
CANCEL	* *
ENTER	# #
POINT	*
MINUS	#

- To enter the Program Mode press "1" after the warble tone.
- To end a phone call after programming:

  Press # # without a prior digit entry.

  The Verbatim autodialer will then issue a prompting beep which is another opportunity to enter a "1" if you didn't want to end the call. It will then say "Goodbye" and end the call.

Exception:

Over the phone, you may not program more than one consecutive dialing delay, because # # (two in a row) is interpreted as ENTER when programming. However, you may extend this delay using code 928. See *Program Code Table* p. 6-9.

- If you initially enter a Command Tone "2" in place of the "1", you will be in a special Program Review Mode, which allows you the safety of checking any of the programming items or messages, without the possibility of altering any of them.
- If you initially enter a Command Tone "3" in place of the "1", you will hear a report of each channel that has any acknowledged or unacknowledged alarm condition.
- If you initially enter a Command Tone "4" in place of the "1", you will hear a listing of all programmed phone numbers, plus any other basic programming items that you have altered from their default values. This is particularly useful in diagnosing operating problems.

- If you initially enter a Command Tone "8" in place of the "1", the unit will not be acknowledged and will immediately say "goodbye" and end the phone call.
- If you initially enter a Command Tone of "0, 5, 6, 7, or 9," in place of the "1", the alarms will acknowledge an alarm and the unit will immediately say "goodbye" and end the phone call.

Note:

Command tones "1, 2, 3, and 4" will acknowledge all alarms, even those not in their Alarm Call Group (ACG). See Section 6.2.13. Command tones "0, 5, 6, 7, and 9" will acknowledge only alarms in their ACG. Command tone "8" will not acknowledge any alarms, but will give the status of all alarms.

5.8 Dialing Out and Conversing Through the Verbatim Autodialer

At the panel, starting in the Normal Mode, press the DIALOUT/PRESS TO TALK key. Next press the digits of the phone number you want to dial. Each digit you press will be dialed as you press it. You will then hear the sound of the ringing.

When you hear the phone answered, press and hold the same DIALOUT/ PRESS TO TALK key as you speak to the person on the line, and release the key to listen. Continue the conversation in this manner.

- To end the call press NORMAL. If the DIALOUT/PRESS TO TALK key is not pressed for more than 2 minutes (or as previously set), the Verbatim autodialer will automatically end the call.
- To automatically re-dial a number that was previously manually entered by this method, press DIALOUT/ PRESS TO TALK as before, then press ENTER rather than entering digits manually.

If you are at the panel when a phone call is in progress, you may suspend the message report and converse with the person on the other end by pressing the DIALOUT/PRESS TO TALK key as described above. There will be no additional dialing, since connection has already been established. To end the call, press NORMAL.

6 Advanced Programming

6.1 Program Codes

This chapter provides the Program Codes table which summarizes the wide variety of available programming operations, along with a description and comments. Additional information may be found in referenced notes below as well as in the referenced sections elsewhere in the manual.

When the overall programming is cleared out at initial start-up, all programming is automatically set to factory default values as shown in the table. Most of these default values are quite suitable for most users and only selected items may need to be programmed to different values.

- To read the existing programmed settings:

  Enter a code and then ENTER without any intervening value. This reads the existing programmed setting without changing it.

- To clear a program:

  Enter POINT ***after the code*** and before ENTER. This clears the program item, or returns it to its default value.

In the Program Codes table, several forms of numeric value entries are shown:

Value	Definition
V	A value of one or more digits which may include a decimal point or minus. Examples: .5, 2.8, 300.6, 60.
N	One or more digits giving a whole number; no decimal points allowed. Examples: 1, 5, 20.
DN	A two-digit Designation Number for phone numbers (01 for first number, 02 for second, etc.).
1/0	Used to turn a function ON (1) or OFF (0).
ZZ	2-digit channel number (use ZZ=00 for ID message).

6.1.1 Notes for Programming Code Table:

Refer to these numbered items under the "Notes" column in the following *Programming Code Table.*

1. ZZ = 2 digit channel number. Use ZZ=00 for Station ID message.
2. For any channels you have programmed as "Status Only" or "Run Time Meter", use code 1 ZZ for the Open Circuit message, use code 2 ZZ for the Closed Circuit Message. See Section 6.2, "Programming Operations," for message information for any Pulse Totalizer channels.
3. DN (Designation Number) is 01 for first dialout phone number, 02 for second number, etc. DN = 00 for special "callback" phone number. Use MINUS to insert any needed delays between digits. Each such delay is 1 second unless extended using code 928.
4. Actual power failure trip delay may be a fraction of a second longer than programmed value, due to power supply discharge time which varies with the number of option boards.

Caution:

5. If Alarm Reset Function is turned OFF, acknowledged alarms will NEVER RE-ARM, preventing further alarm calls after acknowledgment for each channel.
6. Speaker always operates during front panel programming, even if programmed to be off.
7. Cannot be read or changed over the phone.
8. Does not change channels that have been configured for "Status Only," "Run Time Meter," or "Pulse Totalizer."

Caution:

9. High Speed Dialing setting may not work reliably with some telephone company exchanges.
10. Add POINT to restore default message.
11. To pre-set a Run Time value, include the value before ENTER.
12. Maximum value that can be entered is 4,294,967,294.
13. Omits all mention of disabled channel. Restore by setting for Normally Closed, Normally Open, etc.

Programming Code Table (Page 1 of 8)

Code	Description & Comments	Default	Range/Values	Notes	Section
				See p. 6-2	
Channel Status Reading					
0ZZ	Reads status of channel ZZ				6.2.1
0ZZ0	Reads actual open/closed circuit status directly				6.2.1
Message Recording and Reviewing					
100	Records Station ID message			1, 2, 10	4.3, 6.2.2
1ZZ	Records channel ZZ alarm message			1, 2, 10	4.3, 6.2.2
2ZZ	Records channel ZZ normal message			1, 2, 10	4.3, 6.2.2
3ZZ	Reviews channel ZZ both messages ZZ=00 for Station ID msg			1	4, 4.3, 6.2.2
911	Reads current record rate and available record time				4.2
912	Autoextend: sets optimum record rate for recited msg				4.2
913 N	Sets recording rate	Rate 1	Rate 1-4		4.3
914 N	Inserts N in place of 1 in canned station ID message	Station 1	1-16 digits		4.3
Channel Programming (Configuration)					
500	Sets current status as normal for all channels				3.3, 6.2.3
500 N	Sets all inputs to config parameter N	normally closed	0/1/2/3 0 = disarmed 1 = normally closed (default) 2 = normally open 3 = no alarm		3.3, 6.2.3
5ZZ	Reads alarm criteria for channel ZZ	1			6.2.3
5ZZ 0	Disables channel ZZ			13	3.3, 6.2.3
5ZZ 1	Sets chan ZZ normally closed			1	3.3, 6.2.3
5ZZ 2	Sets chan ZZ normally open			1	3.3, 6.2.3
5ZZ 3	Sets chan ZZ for no alarm (status report only)			1	3.3, 6.2.3
5ZZ 4	Sets chan ZZ for run time meter operation			1	3.3, 6.2.4
5ZZ 4 V	Preset starting value	0.0 hrs	0.0-99,999.9 hrs	1	6.2.4
5ZZ 7 N	Pulse totalizer: ACTIVATES with starting value N			12, 2	6.2.5
5ZZ 8 N	Pulse totalizer: sets scale factor N			12	6.2.5
5ZZ 6 N	Pulse totalizer: sets alarm setpoint N with starting value N			12	6.2.5

Programming Code (Page 2 of 8)

Code	Description & Comments	Default	Range/Values	Notes *See p. 6-2*	Section
Alarm Trip Delays					
600	Reads power failure alarm trip delay				6.2.6
600 V	Sets power failure alarm trip delay to V	0.1 min	0.1-999.9 min		6.2.6
6ZZ	Reads chan ZZ alarm trip delay				6.2.6
6ZZ V	Sets chan ZZ individual alarm trip delay to V	2 sec	0.1-9999.9 sec	1	6.2.6
6ZZ POINT	Returns chan ZZ individual alarm trip delay to default	2 sec		1	6.2.6
902 V	Sets global (all channels) alarm trip delay to V seconds	2 sec	0.1-9999.9 sec		6.2.6
902 POINT	Returns global (all channels) alarm trip delay to default	2 sec			6.2.6
Phone Numbers and Pulse/Tone Dialing					
700	Reads special "callback" phone number			See Code 924	6.2.18
700 N	Sets special "callback" phone # to N		1 - 60 digits		6.2.18
7DN	Reads phone number DN		01 - 16 DN = 01-16		3.2, 6.2.7
7DN N	Sets phone number DN to N phone #		1 - 60 digits N can = up to 60 digits	3	3.2, 6.2.7
7DN POINT	Clears out phone number DN				3.2, 6.2.7
900 0/1	Read/Set Call Progress Monitoring	0 (OFF)	0/1 0 = OFF 1 = ON		6.2.12
901 0/1/2	Sets dialing mode	Pulse mode	0/1/2 0 = pulse 1 = tone 2 = high speed	9	6.2.7
903 V	Sets time between callouts to V	2 min	0.1-99.9 min		6.2.18
906 N	Sets ring answer delay to N N = whole number	1 ring	1 - 20 rings		6.2.18
908 0/1	Sets Autocall ON/OFF	OFF	0/1 0 = OFF 1 = ON		6.2.18
909 V	Sets Autocall interval to V	24 hrs	0.1-99.9 hrs		6.2.18
916 N	Set Automatic Phone Fault Detect frequency	24 hrs	0.1 - 24 hrs	916 POINT resets to default	6.2.10
917 0/1/2/3	Set Phone Fault and Auto Tone-Pulse	3	0/1/2/3 0 = Phone Fault OFF/Auto Tone-Pulse OFF 1 = Phone Fault ON/Auto Tone-Pulse OFF 2 = Phone Fault OFF/Auto Tone-Pulse ON 3 = Phone Fault ON/Auto Tone-Pulse ON		6.2.10
918	CPM Ring Count	10 rings	5 - 20 rings		6.2.12
928 N	Extends length of inserted dialing delays to N sec	1 sec	1 - 10 sec		6.2.7

Programming Code (Page 3 of 8)

Code	Description & Comments	Default	Range/Values	Notes	Section
				See p. 6-2	
Alarm Call Grouping					
5ZZ 9	Reads channel ZZ alarm call grouping linkage			1	6.2.13
5ZZ 9 DN	Links channel ZZ to phone numbers DN.	Calls all phone #s	01 - 16 DN = 01-16	1	6.2.13
5ZZ 9 POINT	Clears channel ZZ alarm call grouping linkage.			1	6.2.13
Alarm Ready Scheduling					
935 7	Initializes real-time clock chip on install to 1/6/92 2				2.3, 6.2.19, 7.9
941 MMDDYYD	Sets date	01/06/92 2	01/01/94 - 12/13/20 D *(Day Code)* is optional: 1 = Sunday 2 = Monday 3 = Tuesday 4 = Wednesday 5 = Thursday 6 = Friday 7 = Saturday		2.3, 7.9
942 HHMMSS	Sets time	08:00:00	00:00-23:59:59 (military-24-hour-clock)		2.3, 7.9
961	Read weekday rearm/disarm times				7.9
961 RRRR DDDD	Sets weekday rearm/disarm times	1700, 0800		RRRR=rearm time, DDDD=disarm time (military-24-hour-clock)	7.9
962	Reads weekend rearm/disarm times				7.9
962 RRRR DDDD	Sets weekend rearm/disarm times	1700, 0800		RRRR=rearm time, DDDD=disarm time (military-24-hour clock)	7.9
963	Reads weekend rearm/disarm day of week				7.9
963 R D	Sets weekend rearm/disarm day of week	Friday, Monday	R = rearm day D = disarm day		7.9
964	Reads holiday rearm date				7.9
964 MMDDYY	Sets holiday rearm date	12/24/90	Today - 12/31/20 MM = month DD = day YY = year		7.9
965	Reads holiday disarm date				7.9
965 MMDDYY	Sets holiday disarm date	12/24/90	The day after the holiday rearm date (see Code 964) - 12/31/20		7.9

Programming Code (Page 4 of 8)

Code	Description & Comments	Default	Range/Values	Notes	Section
				See p. 6-2	
Alarm Ready Scheduling . . . *Continued from p. 6-5*					
966	Reads alarm ready schedule control number				7.9
966 N	Sets alarm ready schedule control number	0	N control 0-7 0 = OFF 1 = Weekday 2 = Weekend 3 = Weekday and Weekend 4 = Holiday 5 = Weekday and Holiday 6 = Weekend and Holiday 7 = Weekday, Weekend and Holiday		7.9
Local Data Logging Programming Codes					
935 7	Initialize real-time clock chip on install to 1/6/92 2				2.3, 6.2.19, 7.9
941 MMDDYYD	Sets date.	01/06/92 2	01/01/94-12/31/20 D *(Day Code)* is optional: 1 = Sunday 2 = Monday 3 = Tuesday 4 = Wednesday 5 = Thursday 6 = Friday 7 = Saturday		2.3, 7.9
942 HHMMSS	Sets time	08:00:00	00:00-23:59:59 (military-24-hour clock)		2.3, 7.9
943 V	Sets regular interval local printing	OFF	0 = OFF .1 - 999.9 hrs		2.3, 7.9
944	Prints all current programming immediately				2.3, 7.9
Analog Input Programming					
5 ZZ 1 X.XX	Sets low signal input value				B.1.5
5 XX 1 POINT	Sets low signal input value to real world point				B.1.5
5 ZZ 2 X.XX	Sets low signal input spoken value				B.1.5
5 ZZ 3 X.XX	Sets high signal input value				B.1.5
5 ZZ 3 POINT	Sets high signal input value to real world point				B.1.5
5 ZZ 4 X.XX	Sets high signal input spoken value				B.1.5

Programming Code (Page 5 of 8)

Code	Description & Comments	Default	Range/Values	Notes See p. 6-2	Section
Analog Input Programming . . . *Continued from p. 6-6*					
5 ZZ 5 X.XX	Sets low setpoint alarm value				B.1.5
5 ZZ 6 X.XX	Sets high setpoint alarm value				B.1.5
5 ZZ 7	Sets analog input signal type	0	0/1/2 0 = 4-20 ma signal 1 = 0-1 VDC signal 2 = RACO TS-705A		B.1.3
Remote Supervisory Control					
For all items in this section: N = output number, Range = 01, 02, 03, 04, 05, 06, 07, 08					
95 N	Reads RSC output #N ON/OFF condition			14	C.1.3
95 N 0	Turns RSC output #N OFF				C.1.3
95 N 1	Turns RSC output #N OFF				C.1.3
95 N 2 V	Turns RSC output #N ON for V seconds only	1 sec	1 - 99,999 sec		C.1.3
95 N 3 V	Turns RSC output #N OFF for V seconds only	1 sec	1 - 99,999 sec		C.1.3
9500	Reports ON/OFF status of all outputs				C.1.3
9500 0	Turns OFF all outputs				C.1.3
9500 1	Turns ON all outputs				C.1.3
9500 8 V	Establish default pulse duration in minutes (When using 95 N 2 or 95 N 3)				C.1.3
9500 9 V	Establish default pulse duration in seconds (When using 95 N 2 or 95 N 3)				H.2.3
Data Acquisition/Central Data Logging					
919 V	Sets quick intercall time	60 sec	35-999 sec		E.2
981 V	Return To Normal (RTN) calling	0	0/1/2/3/4/5	See Code 923	E.1, K.4
982 0/1/2	Acknowledgment calls to central station	0	0/1/2 0 = 1 1 = ON 2 = resets all alarm acknowledgment call status		E.3
983 0/1	Modem Automatic Speed Select	1	0/1 0 = OFF 1 = ON		E.4

Programming Code (Page 6 of 8)

Code	Description & Comments	Default	Range/Values	Notes See p. 6-2	Section
Data Acquisition/Central Data Logging *Continued from p. 6-7*					
984 0/1	Modem High/Low speed selection	1	0/1 0 = 300 1 = 1200		E.5
985 N	Data call attempts	3	1 - 10		E.6
986 0/1	Sets answer mode	0	0/1 0 = Data-to-Voice 1 = Voice Only		E.7
987 N	Data/Voice autocall calls	0	0/1/2 0 = Autocalls to Central Station only 1 = Autocalls to personnel numbers only 2 = Autocalls to all numbers		E.8
Miscellaneous Programming Items					
902 V	Sets global (all channels) alarm trip delay to V	2 sec	0.1-9999.9 sec		6.2.6
904 V	Sets alarm reset time to V	1 hour	0.1-99.9 hr		5.6, 6.2.18
905	Clears all acknowledged alarms and clears reset timers				6.2.18
907 N	Sets number of alarm message repeats to N N = whole number	3 repeats	1-20 repeats		5.3, 6.2.18
910 N	Establishes a security access code N	None	0-8 digits	7	6.2.18
920 V	Power failure trip delay (duplicates function of code 600)	0.1 min	0.1-999.9 min	4	6.2.6
921 0/1	Sets power failure alarm	ON	0/1 0 = off 1 = on		6.2.6
922 0/1	Sets alarm reset timers	ON	0/1 0 = off 1 = on	5	6.2.18
923	Annunciator Sequence	1	1-4 Values: 1 = M-1designations 2 = A-1-4 designations 3 = A-1 designations 4 = A-1-4 variant	See also Code 981	K.4
924	Initiates test callback to phone # 00			unit must be ARMED	6.2.18
925 0/1	Turns on/off alarm acknowledgment on call-in to dialer.	ON	0/1 0 = OFF 1 = ON		
926 V	Sets delay before return to normal (Exit Delay) to V	2 min	1-99.9 min	Nonrecurring Function	6.2.18

Programming Code (Page 7 of 8)

Code	Description & Comments	Default	Range/Values	Notes See p. 6-2	Section
Miscellaneous Programming Items . . . *Continued from p. 6-8*					
927 0/1	Sets intercall delay parameter	0	0/1 Values: 0 = Normal operation of intercall delay. 1 = If new Unacknowledged alarms occur during the intercall delay period, the unit will begin a new dialout immediately. The unit will dial the next phone number in the dialing sequence. It will not start over at the top of the list.	** Firmware version 2.01+ only**	
928 N	Extends length of inserted dialing delays to N sec	1 sec	1-10 sec		5.7, 6.2.7
930 0/1	Sets arm or disarm unit for alarm callouts	armed	0/1 0 = disarms 1 = arms unit		6.2.18
932	Invokes one-time 15-second listening period	OFF			6.2.18
933 0/1	Sets local microphone ON or OFF	OFF	0/1 0 = OFF 1 = ON		6.2.18
934 0/1	Sets speaker ON or OFF	ON	0/1 1 = ON 0 = OFF	6	6.2.18
Clear Out Operations					
935 0	Clears out phone numbers; sets all delays to defaults				6.2.19
935 1	Clears out phone numbers only				6.2.19
935 2	Clears out all alarm call grouping linkage				6.2.19
935 3	Sets the following delays to their factory default values: 902, 903, 904, 920, 921, 926, 928			921 sets power failure alarm ON	6.2.19
935 4	Clears all user recorded messages				6.2.19
935 5	Clears all programming except messages			does not clear 913, 930, 941, 942	6.2.19
935 6	Clears all totalizers to 0 (not to preset) reading				6.2.19
935 7	Clears real-time clock chip (reinitialize)				2.3, 6.2.19, 8.9
935 9	Total clearout: Erases all programming & messages			does not clear 941, 942	3.1, 6.2.19
Diagnostic Readouts					
940	Reads all 4 diagnostic counts (add 0 to clear all 4)				6.2.20
940 1	Reads call in count (add 0 to clear)				6.2.20
940 2	Reads dial out count (add 0 to clear)				6.2.20
940 3	Reads acknowledged alarm count (add 0 to clear)				6.2.20
940 4	Reads power failure alarm count (add 0 to clear)				6.2.20

Programming Code (Page 8 of 8)

Code	Description & Comments	Default	Range/Values	Notes See p. 6-2	Section
Local Alarm/Line Seizure					
960 0	Read local alarm relay/line seizure				H.8
960 00/01	Set local alarm relay/line seizure 00 = local alarm relay 01 = line seizure	00	00/01		H.8

6.2 Programming Operations

The following descriptions show the relevant program codes in parenthesis, and are organized according to their appearance in the preceding Program Codes table located in Section 6.1, "Program Codes."

Refer also to Section 5, "Using Your Verbatim Autodialer," for a description of over-the-phone programming.

6.2.1 Channel Status Reading

Code	Function	Description
0 ZZ	Read Status of Channel ZZ	Plays the message that corresponds to the present input condition of Channel ZZ.
0 ZZ 0	Read Open/Closed Circuit Status Directly	Says "Channel ZZ is closed" if channel ZZ input is presently Closed Circuit, or "Channel ZZ is open" if the input is Open Circuit. Useful in troubleshooting, especially at setup time.

Note:

If a channel is disabled, its status will never be mentioned.

6.2.2 Message Recording and Reviewing

Be sure to refer to Section 4, "Record Voice Messages," for important details on message recording, including codes 911, 912, 913, and 914.

Code	Function	Description
100	Record Station Message	
1 ZZ	Record Channel ZZ Alarm Message	Used for Open Circuit message for channels programmed for NO ALARM (status only), or for Run Time Meter operation. Also used for a preamble message for channels programmed for Totalizer or Analog function.

2 ZZ	Record Channel ZZ Normal Message	Used for Closed Circuit message for channels programmed for NO ALARM (Status Only) or for Run Time Meter operation. Also used for "units of measure" portion of a message following preamble and digit readings, for channels programmed for Totalizer or Analog function.
3 ZZ	Review Channel ZZ Messages	Use 3 00 to review Station ID message

6.2.3 Channel Programming (Configuring)

Also see Section 3.3, "Programming Input Channels."

Code	Function	Description
500	Set Present Input Status as Normal Condition for All Contact Input Channels	Used at setup time as the most expedient way of programming the Normally Open/Normally Closed configurations ("Alarm Criteria") of contact input channels. Special configurations such as Status Only, Run Time Meter or Totalizer may then be programmed for specific individual channels. This code does not affect channels already programmed for Status Only, Run Time Meter, or Pulse Totalizer. **APPLIES ONLY TO CONTACT INPUTS.**
500 0	Sets the Alarm Criteria for all contact channels to DISABLED	Used at setup time as the most expedient way of programming all channels to the same alarm criteria. **APPLIES ONLY TO CONTACT INPUTS.**
500 1	Sets the Alarm Criteria for all contact channels to NORMALLY CLOSED	Same as above
500 2	Sets the Alarm Criteria for all contact channels to NORMALLY OPEN	Same as above
500 3	Sets the Alarm Criteria for all contact channels to STATUS ONLY	Same as above
5 ZZ	Read Channel ZZ Programming ("Alarm Criteria")	
5 ZZ 0	Disables Channel from Being Monitored and Reported	
5 ZZ 1	Set Channel ZZ for Normally Closed Operation	An Open Circuit condition will cause an alarm. **APPLIES ONLY TO CONTACT INPUTS.**
5 ZZ 2	Set Channel ZZ for Normally Open Operation	A Closed Circuit condition will cause an alarm. **APPLIES ONLY TO CONTACT INPUTS.**
5 ZZ 3	Set Channel ZZ for No Alarm (Status Only)	**APPLIES ONLY TO CONTACT INPUTS.**

6.2.4 Run Time Meter Programming

You may program any of the ordinary contact (digital or discrete) input channels to accumulate and report the number of hours that their respective input circuits have been closed. Any such channels will never cause an alarm, but on inquiry will recite the channel's Closed Circuit message or the Open Circuit message according to the status of the input, and will then report the accumulated Closed Circuit time (run time) to the tenth of an hour.

- To program channel ZZ for Run Time Meter operation, press:

  `5 ZZ 4 ENTER`

- To preset a starting value, press:

  `5 ZZ 4 V ENTER`

  where V may be any value from 0 to 99,999.9.

- To delete the Run Time Meter programming, you must reprogram the channel for any other type of alarm criteria.

As with channels programmed for NO ALARM (Status Only) operation, the default Open Circuit message is "Channel N is off." To record your own Open Circuit message for channel ZZ, use program code 1 ZZ. The default Closed Circuit message is "Channel N is on." To record your own Closed Circuit message for channel ZZ, use program code 2 ZZ.

6.2.5 Pulse Totalizer Function Programming

The Totalizer function counts the accumulated number of pulses (momentary contact closures) occurring at the contact input for a channel which you have programmed for Totalizer operation. This function is typically used to accumulate the pulse output of rotary flow meters.

An alarm set-point may be programmed to create an alarm call upon reaching a particular total value. Scale and offset factors are programmable, and user-recorded messages may be used.

Any contact input channel may be programmed for the Totalizer function, up to a total of 8 Totalizers. The input pulse rate must not exceed 100 pulses per second, and if the rate is over 50 pulses per second, the pulses must have a 50% duty cycle.

- To program channel ZZ for Totalizer operation, press:

  `5 ZZ 7 ENTER.`

Note:
This function must be done to Activate the Totalizer. It is only possible to program up to 8 contact input channels for Pulse Totalizer. However, any 8 inputs may be used from the full set of contact inputs in your unit.

- To establish a non-zero starting value for the spoken reading, add the desired starting spoken value after the 7 and before ENTER.
- To establish a scale factor (so that a number of pulses will be translated into a single spoken unit count), press:

  5 ZZ 8 N ENTER

  where N is the number of pulses corresponding to a single spoken unit count. For example, if a pulse from a flow meter occurs for each 1/10 gallon of water flow, but the desired report is needs to be in thousands of gallons, a value of 10,000 would be used for N. The unit uses the word "percent" in speaking of the scale factor.

The spoken scaled value will "roll over" to zero upon reaching 4,294,967,294 (2^{32}). Values above this should not be entered at the keyboard.

The default message for Totalizer channels is "Channel N Totalizer count is N." User-recorded messages are normally done in two segments. Use program code 1 ZZ to record a preamble message such as "The total water flow reading is". Use program code 2 ZZ to record an ending units-of-measure message such as "thousand gallons". During the report, the unit will insert the digits comprising the actual scaled value. In this example, the resulting complete report would be "The total water flow reading is (spoken value) thousand gallons".

- To establish a Totalizer alarm set-point, press:

  5 ZZ 6 N ENTER.

When the scaled value reaches N, the unit will go into Unacknowledged Alarm and begin dialing. After the initial alarm has occured, a new alarm will not occur until the user has reset the criteria. You may program a value of zero for N to cancel any previously programmed Totalizer alarm set-point for channel ZZ.

- To clear out all Totalizer readings to zero in one step, press:

  9 3 5 6 ENTER.

6.2.6 Alarm Trip Delays

The Alarm Trip Delay is the length of time after a violation occurs before the unit goes into Unacknowledged Alarm and begins dialing. The default value is 2 seconds for all inputs and 0.1 minute (6 seconds) for power failure. During this time, if a status is read, the message will be the ALARM message, with the extra word "alert" appended. If the violation is corrected before the Alarm Trip Delay times out, no alarm or dialout will occur.

There are two ways to change this Alarm Trip Delay: global (common for all channels except power failure) programming, and individual programming for each channel and power failure.

- To program a new global Alarm Trip Delay, press:

  `9 0 2 V ENTER`

  where V is a value consisting of 1 to 4 digits, between .1 and 9999.9 seconds. For example, possible entries include .1, 5, 5.1, and 600.1 (seconds).

- If you wish to program a new Alarm Trip Delay for an individual ZZ channel, press:

  `6 ZZ V ENTER`

- To set a different Power Failure Trip Delay, press:

  `6 00 V ENTER` (code 920 does the same thing)

- To turn off the Power Failure Alarm function, press:

  `9 2 1 0 ENTER`

- To turn on the Power Failure Alarm function, press:

  `9 2 1 1 ENTER`

Note:

The global code 902 overrides any previously set individual channel Alarm Trip Delays. Therefore, if you wish to establish a different global Alarm Delay and also program selected inputs for still different individual trip delays, perform the global programming first, and then any individual trip delay programming.

The default trip delay is 2 seconds for the contact channels and 6 seconds (.1 hour) for power failure. If you are getting a lot of "nuisance" alarms, with a call saying, "alarm now normal," you might think about setting the alarm trip delay up a bit. A good example of this would be the power fail trip delay. In some areas of the country, it is very common to have short periods of power failure -- ten seconds or less. These may not be of particular concern, so setting the power fail trip delay to .2 or .3 hours could save unnecessary phone calls.

Caution:

When leaving program mode all timers for unacknowledged alarms and violations will be reset.

6.2.7 Phone Numbers and Pulse/Tone Dialing

Also see the section 6.2.13, "Alarm Call Grouping," and Section 3.1, "Starting Up and Clearing the Unit."

Note:

DN is the 2-digit Designation Number: 01 for the first phone number, 02 for the second number, up to 16 for the 16th phone number.

Refer to Programming Worksheet A. Write down each phone number you wish to program, along with a person's name, for future reference.

- To program the first phone number to be dialed on alarm, press:

  `7 01 (then the complete phone number) ENTER.`

- To program the second phone number to be dialed on alarm:

  Use code 7 02 in place of 7 01, progressing to a maximum of code 7 16 for a 16th phone number.

Each phone number may be up to 60 digits in length. Be sure to include any necessary area codes or "1" prefixes.

- To erase phone number DN, press:

  `7 DN POINT ENTER.`

- If you need Touch Tone dialing, press:

  `9 01 1 ENTER.`

- For high speed dialing, press:

  `9 01 2 ENTER.`

Caution:

"High speed dialing" may not work reliably with some older telephone company exchanges.

- To switch back to pulse dialing, press:

  `9 01 0 ENTER`

- To insert delays between dialed digits (e.g. after a leading "9" in PBX systems), in the programming process, press the MINUS key once for each one-second delay desired. To extend the length of each delay beyond 1 second, press:

  `9 28 N ENTER`

  where N is the number of seconds of delay desired for each delay invoked with the MINUS key.

6.2.8 Enhanced Telephone Interface Features

The Enhanced Telephone Interface features give the user additional power to solve unusual telephone system interface problems and to provide more reliable and efficient notification of alarms.

The Enhanced Telephone Interface Features include the following functions:

- 60 Digit Phone Numbers
  - For all 16 telephone numbers and the call-back number.
- Telephone Line Fault Detection (Phone Fault)
  - Tests phone line at regular programmed interval
  - Flashes TFAIL LED on dialer front panel upon failure
  - Logs Phone Faults and phone line restoration to Local Printer
- Automatic Selection of Tone versus Pulse Dialing
  - Tests for tone capability upon first power up without user intervention
  - May be overridden for PBXs with "non-standard" dialtones
- Call Progress Monitoring (CPM)
  - Detects busy and ringing signals
  - Waits until phone is answered to annunciate voice reports
  - Abandons call if busy or no answer and quickly tries next number
- Numeric Pager Support
  - Designate Pager only numbers - no voice annunciation
  - Insert pager system terminator characters such as '#' or '*'
  - Insert DTMF A, B, C & D tones in phone number strings for unique IDs
- PBX Support
  - Ignore "non-standard" PBX dialtones
  - Insert "wait for outside line" dialtone into phone number strings

The Enhanced Telephone Interface Features are included on Verbatims with a mainboard Revision of VMP-5a and above and firmware revisions 2.09 and above ONLY.

Contact your RACO Representative about upgrading if the Enchanced Telephone Interface is required.

6.2.9 60 Digit Phone Numbers

Telephone numbers may be as long as 60 digits. This allows, for instance, the Verbatim autodialer to make calls using long distance companies which require entry of access codes. Even with many digits occupied by long distance numbers and access codes there will still be sufficient digits remaining for calls to pager systems requiring complex sequences of terminators, ID numbers, time delays, tone detects, etc.

6.2.10 Telephone Line Fault Detection (Phone Fault)

The Phone Fault Detection feature tests the telephone line whenever the unit needs to make a phone call and at a regular programmable time interval (as long as there are phone numbers programmed).

Phone Fault is turned ON by default but may be disabled if so desired. Also, the Phone Fault Detection interval is user programmable.

Phone Fault shares a user code with the Automatic Tone/Pulse Selection capability. The basic user command is code 917. Entering code 917 with no parameter will cause a recitation of the current settings for Phone Fault and Automatic Tone/Pulse Selection.

The following parameters may be entered:

- Turns OFF BOTH Phone Fault Detect and Auto. Tone/Pulse Select

  `9 1 7 0`

- Turns ON Phone Fault Detect, turns OFF Auto. Tone/Pulse Select

  `9 1 7 1`

- Turns OFF phone fault detect, turns ON Auto. Tone/Pulse Select

  `9 1 7 2`

- Turns ON BOTH Phone Fault Detect and Auto. Tone/Pulse Select (default)

  `9 1 7 3`

Note:

The factory default setting for code 917 is parameter 3, BOTH Phone Fault Detect and Auto. Tone/Pulse Select ON.

The command code 916 is used to set the Automatic Phone Fault Detection interval. This time interval can range from 0.1 hour to 24 hours. The factory default setting is 24 hours. Enter the command 916 followed by a value from 0.1 to 24.0 to program the Phone Fault Detection interval.

- For example, to set the Phone Fault Detection interval to 0.3 hour., enter:
  916 0.3

Whenever a Phone Fault is first detected, a Local Data Logger (LDL) message will be sent to the printer with date and time stamp. Additionally, the Phone Fault LED, labeled TFAIL, will begin to blink.

If a Phone Fault is detected at the beginning of an outgoing phone call the TFAIL LED will flash and the unit will return to the NORMAL state. Then, while still in the NORMAL state, the unit will continually check the telephone line every 30 seconds for restoration of the telephone service.

When telephone service is restored, a message will be sent to the Local Data Logger's printer and the TFAIL LED will go from flashing to solid ON. The Verbatim autodialer will then resume making any pending phone calls. The TFAIL LED will remain ON until a voice message about the Phone Fault is communicated via the phone or to an operator at the front panel by pressing the CHECK STATUS button. The TFAIL LED and pending voice annunciation of the Phone Fault condition may also be cleared at the front panel by pressing the DISARM/RE-ARM button twice.

No Phone Fault Detection will be performed if there are no phone numbers programmed. If the unit needs to make an alarm call when there is a Phone Fault the numbered channel LEDs will blink continuously even though the unit is in the NORMAL state. This unusual condition will only be seen while there is a Phone Fault and the unit is constantly testing for the return of telephone service.

6.2.11 Automatic Tone/Pulse Selection

When Automatic Tone/Pulse Selection is ON the Verbatim autodialer will test for the ability to use tone dialing. This test will be performed only once, one minute after the unit is powered on or is reset. Automatic Tone/Pulse Selection enables the installer to not be concerned about whether the telephone line supports tone dialing.

Automatic Tone/Pulse Selection shares a user code with Phone Fault Detection. The basic user command is code 917. Entering code 917 with no parameter will cause a recitation of the current settings for Phone Fault and Automatic Tone/ Pulse Selection. The following parameters may be entered:

- Turns OFF BOTH Phone Fault Detect and Auto. Tone/Pulse Select
  9 1 7 0
- Turns ON Phone Fault Detect, turns OFF Auto. Tone/Pulse Select
  9 1 7 1

- Turns OFF phone fault detect, turns ON Auto. Tone/Pulse Select

  9 1 7 2

- Turns ON BOTH Phone Fault Detect and Auto. Tone/Pulse Select (default)

  9 1 7 3

Note:

The factory default setting for code 917 is parameter 3, BOTH Phone Fault Detect and Auto. Tone/Pulse Select ON.

Setting Automatic Tone/Pulse Selection ON when it was previously OFF will cause the Verbatim autodialer to perform the test for Tone/Pulse Selection even though it has been longer than one minute since the unit was last powered on or reset.

After powering the unit on, Automatic Tone/Pulse Selection may be temporarily suspended by any front panel activity. Automatic Tone/Pulse Selection will then be resumed one minute after the front panel activity has ceased.

No Tone/Pulse Selection will be done while the unit is being programmed over the phone or if there are not phone numbers programmed.

6.2.12 Call Progress Monitoring (CPM)

Call Progress Monitoring (CPM) operates by listening for the presence or absence of busy and ringing signals. These are the same signals you hear after you dial a phone number. Proper operation of CPM requires that the busy and ringing signals are composed of standard Call Progress frequencies.

The possibility exists that CPM may not function properly because the CPM tones on a particular phone system are not standard.

Unlike other equipment with Call Progress Monitoring, CPM on the Verbatim autodialer does not include detection for the dial tone at the beginning of the dialout session. However, dialtone detection is an integral part of Phone Fault Detection. This allows CPM to be operational even when the Verbatim autodialer is installed inside of a PBX phone system which has a non-standard dialtone.

CPM is intended to detect the following phone line states:

- phone line is busy - both subscriber and trunk busy signals are detected
- non-existent phone number
- phone unanswered - still ringing
- phone answered - ringing stopped

When CPM determines that a call is not complete, an appropriate report will be sent to the local printer.

Reasons for a non-completed call:

- CPM determines the line is busy
- CPM does not detect cessation of ringing before end of programmed CPM ring count
- CPM does not detect either busy signal or valid ring signals

Reason for a completed Call:

- CPM detects at least one ring followed by cessation of ringing

If a call is not completed, the Verbatim autodialer will disconnect the call and enter the intercall delay state. At the end of the intercall delay, the next programmed telephone number will be dialed.

When a call is not completed, the intercall delay will always be shortened to 30 seconds. This CPM altered intercall delay is fixed at 30 seconds and is not affected by the user-programmed intercall delay. The normal programmable intercall delay will apply only to the delay between completed calls.

Call Progress Monitoring for firmaware version 2.09 is set to ON by factory default. If CPM is OFF the Verbatim will deliver voice messages without regard to any ringing or busy signals. This unit will simply dial the number, then after a short delay, start annunciating voice reports.

As noted above, dialtone detection is actually a part of the Phone Fault Detection feature. It is possible to have CPM turned OFF and Phone Fault Detect turned ON. In this case, the unit will test for a dialtone but not for busy or ringing signals.

Use code 900 to read or set CPM programming. Use code 900 followed by a 1 or 0 parameter to program CPM ON (1) or OFF (0).

The CPM ring count is the number of rings Verbatim autodialer will wait for an answer before considering the call to be incomplete. Use code 918 to read or set the number of CPM rings. The factory default is 10 rings and the user may program any number of rings from 5 to 20.

- For example, to program the CPM ring count to 10 rings, enter:

  ```
  918 10 then ENTER
  ```

6.2.13 Alarm Call Grouping

This is a programming step that "links" selected channels to selected dialout phone numbers, so that when a given channel goes into alarm, only the phone numbers "linked" to that channel will be dialed. Ordinarily, an alarm on any channel will cause dialing of the entire list of phone numbers.

Alarm Call Grouping is typically done when certain channels are associated with a specific category of personnel, such as electrical, plumbing, security, etc. However, Power Failure to the Verbatim autodialer causes dialing of all phone numbers. If you need to limit Power Failure alarm calls to selected numbers:

1. Turn off the regular Power Failure alarm function using code 9 2 1 0, (described below)
2. Then connect an unused input channel for power failure monitoring, using the contacts of a relay.

To program for Alarm Call Grouping:

1. Enter your phone number. It is important to first write in your entire list of phone numbers on Programming Worksheet A in Appendix J.

Note:

There is a 2-digit "Designation Number" on the Worksheet associated with each phone number (01 for the first number, etc.). This number corresponds with the 3-digit program code for entering phone numbers (701 for the first number, etc.).

2. Group them by using code `5 ZZ 9 DN`. Begin by filling in Programming Worksheet B in Appendix J.

   Refer to the filled-in examples for guidance. The right-hand column will now contain the actual program code strings which you should now enter, terminating each string entry with the ENTER key.

   For example, to link channel 1 to the second and fifth phone numbers, following the filled-in example, you would press:

   ```
   5 01 9 02 05 ENTER
   ```

3. Phone numbers will always be dialed in ascending order of the 2-digit Designation Numbers, regardless of their order in your program code entry. Note that an alarm on any channel that is not "linked" with a program code entry will cause dialing of the entire list of phone numbers.
   - To read the linkage programming on channel ZZ, press:

     ```
     5 ZZ 9 ENTER
     ```

- To "un-link" channel ZZ so that it again calls all phone numbers, press:

  5 ZZ 9 POINT ENTER

- To undo all existing linkage on all channels, press:

  9 35 2 ENTER

6.2.14 Alarm Ready Scheduling

Refer to Section 7, "Using the Alarm Ready Schedule Feature," for use and application information. See also Appendix E , "Data Acquisition/Central Data Logging."

6.2.15 Local Data Logging Programming Codes

Refer to Chapter 2, "Installation," for use and application information.

6.2.16 Analog Input Programming

Refer to Appendices B, C and D, "Analog Signal Input," "Remote Supervisory Control Output," and "Printer Options," for use and application information.

6.2.17 Remote Supervisory Control

Refer to Appendices B, C and D, "Analog Signal Input," "Remote Supervisory Control Output," and "Printer Options," for use and application information. See also Appendix E, "Data Acquisition/Central Data Logging."

6.2.18 Data Acquisition/Central Data Logging

Refer to Appendix E, "Data Acquisition/Central Data Logging."

6.2.19 Miscellaneous Programming Tips

(903) Time Between Alarm Call Outs

This is the length of time after ending one alarm call-out and before beginning the next call-out. Default value is 2 minutes; range is 0.1 to 99.9 minutes.

- To program a different number of minutes V, press:

  9 03 V ENTER

(904, 922) Alarm Reset Time

This is the length of time after acknowledgment before a given channel (or Power Failure) is automatically reset to a clear condition, ready to act on a new alarm condition. Refer to the diagram "Anatomy of an Alarm" in Section 5, "Using Your Verbatim Autodialer," for a depiction of the various events involved in association with the Alarm Reset Time. Default value is 1 hour; range is 0.1 to 99.9 hours.

- To program a different number of hours V, press:

  `9 04 V ENTER`

- To turn the Alarm Reset Timer function off, press:

  `9 22 0 ENTER`

Caution:

You should not turn the alarm reset timer function off under normal circumstances because once a given channel's alarm has been acknowledged, it would never again cause an alarm call out.

- To turn the Alarm Reset Timer function on again, press:

  `9 22 1 ENTER`

(905) Clear All Acknowledged Alarms and Alarm Reset Timers

Especially during setup and testing, it is useful to be able to re-trip an alarm after it has previously been tripped and acknowledged, without having to wait for the Alarm Reset Time to expire.

- To perform this clear out, press:

  `9 0 5 ENTER`

At the panel, the same result may be more easily obtained by pressing DISARM/RE-ARM to disarm the unit, then pressing it again to rearm the unit.

(906) Ring Answer Delay

Represents the number of rings required when calling the Verbatim unit, before the unit will answer. A long ring delay might be programmed if you wish personnel to have the opportunity to answer a regular telephone on the same line, before the Verbatim autodialer would answer. Default value is 1 ring; range is 1 to 20 rings.

- To program a different number of rings N, press:

  `9 06 N ENTER`

(907) Number of Alarm Message Repeats

Represents the total number of times each message or set of messages is spoken during each alarm call out. Normally a value of 3 repeats (strictly speaking, the alarm message plus 2 repeats) should be programmed. The reason for this is that there needs to be adequate message recital time to allow adequate time to answer the phone call and hear at least one complete set of messages. Default value is 3 repeats; range is 1 to 20 repeats.

- To program a different number of repeats N, press:

  `9 07 N ENTER`

(908) Autocall Test Function

The Autocall Test Function causes the unit to place test calls at regular intervals for the purpose of ongoing verification of Verbatim autodialer and phone line functioning. Calls are placed only once for each interval, to each regular phone number programmed (7 01 through 7 16). The exception being the acknowledgement of a test call, where additional calls will not be placed for that time interval. Each call gives the station ID message and a statement that this is a test call, plus a report of all inputs.

- To turn this function on, press:

  `9 08 1 ENTER`

- To turn it off, press:

  `9 08 0 ENTER`

The first series of calls begins as soon as the Autocall Test Function is turned on. Therefore, if you want the unit to call at 5 PM each day, you will need to turn this function on at that time. The default interval is 24 hours; range is 0.1 to 99.9 hours.

- To program a different interval V, press:

  `9 09 V ENTER`

Note:

If the Verbatim autodialer is in the disarmed mode, call-outs/autocalls will not be made.

(910) Security Access Code

Once you establish a Security Access Code, unauthorized personnel are prevented from altering your programming or messages over the phone without first entering the Access Code. This does not affect programming access at the panel.

- To establish an Access Code N of up to 8 digits, press:

  `9 10 N ENTER (at the panel)`

Once established, whenever you press a Command Tone 1 at the prompting beep, the unit first prompts you to enter the Access Code before allowing you to perform programming or message recording operations. You may still read existing programming without using the Access Code by pressing a Command Tone 2 at the prompting beep. However, the Access Code itself cannot be read over the phone.

- To delete the Security Access Code so that no code is required in order to perform over the phone programming, press:

  `9 1 0 POINT ENTER (at the panel)` **ONLY**

(921, 930) Power Failure Alarm Function ON/OFF; DISARM/RE-ARM All Alarms

- To turn off the Power Failure Alarm function, press:

  `9 21 0 ENTER`

- To turn the Power Failure Alarm function on again, press:

  `9 21 1 ENTER`

- To disarm the unit, preventing any alarm call outs, press:

  `9 30 0 ENTER`

- To rearm the unit, press:

  `9 30 1 ENTER`

At the front panel, the same result is more easily obtained by using the DISARM/RE-ARM key.

(700, 924) Callback/Callforward

This feature causes the unit to dial a special "zeroth" phone number on command. This is typically initiated over the phone, causing the unit to call back to the person who invoked the command, in order to verify the ability of the unit to successfully dial out. The unit gives a status report of all channels as part of this call.

- To program this special callback number, press:

  `7 00 (then the complete phone number) ENTER`

- To initiate the actual dialing, press:

  `9 2 4 ENTER`

If you have executed this command over the phone, the unit will advise you that it will be calling the callback number in 15 seconds. Then it will end the current call in preparation for placing the callback call. If you have executed this command at the front panel, the dialing will occur immediately.

Note:

If the Verbatim autodialer is in the disarmed mode, call-outs/autocalls will not be made.

(926) Delay Before Return to Normal (Exit Delay)

Sometimes it is desirable to prepare the unit for the ability to detect violations and dial out, but with an "exit delay" that allows the user time to exit or remove temporarily existing alarm violations before the unit becomes active.

To set delay before Return to Normal:

1. Press:

   `9 26 V ENTER`

   where V is the desired delay in minutes (range 1.0 to 99.9 minutes).

2. Then press DISARM/RE-ARM if necessary to extinguish the flashing DISARMED legend light. However, do not press NORMAL, but instead leave the unit in PROGRAM mode, with the PROGRAM light illuminated. The unit cannot go into alarm while in PROGRAM mode.

When the delay period times out, the unit will automatically return to NORMAL mode and will then be ready to act on any alarm violations that occur after that time. This code must be re-entered each time you wish an exit delay, since the delay value automatically returns to the default value of 2 minutes upon timeout.

The 2 minute default value provides protection against the possibility that someone might walk away leaving the unit in PROGRAM mode, or perhaps hang up the phone after performing over-the-phone programming without properly ending the call.

(932, 933, 934) Microphone and Speaker Operation

If you enable the front panel microphone using program code 933 as described below, the microphone will be automatically activated for a 15 second listening period at the end of each alarm or inquiry call, allowing you to hear the sounds near the unit from a remote telephone.

An additional warble tone is issued at the end of this listening period, allowing you to postpone tone acknowledgment until after the listening period.

- To turn this function on, press:

  `9 33 1 ENTER`

- To turn this function off, press:

  `9 33 0 ENTER`

If you have turned the microphone on, as above, then during any phone call, you may also invoke a one-time listening period by entering Remote Program Mode (press 1 at the warble tone) and then entering 9 3 2 # #.

- To turn off the speaker so that neither alarm call or inquiry call activity is heard at the unit, press:

  `9 34 0 ENTER`

The speaker will still be heard when operating keys at the front panel.

- To turn the speaker on again, press:

  `9 34 1 ENTER`

Note:

The speaker volume may be adjusted via the trimpot marked SPKR VOL shown on the Electrical Connection Diagram. See Section A.1, "Adjusting Internal Speaker Volume.

6.2.20 Program Clear Out Operations

The following list of program codes provides a flexible variety of operations to conveniently clear selected programming items in order to allow for a fresh start.

Code	Function
935 0	Clears out phone numbers; sets all delays to default.
935 1	Clears out phone numbers only.
935 2	Clears out all alarm call grouping linkage.
935 3	Sets the following delays to their factory default values: 902, 903, 904, 920, 921, 926, 928 (921 sets power failure alarm ON)
935 4	Clears all user recorded messages.
935 5	Clears all programming except messages. (Does not clear 913, 930, 941, and 942)
935 6	Clears all Totalizer counts to zero.
935 7	Clears and initializes clock.
935 9	Total clear out (Does not clear 941 and 942).

Caution:

Code 9 35 9 erases all programming and messages.

6.2.21 (940) Diagnostic Readouts

To assist in analyzing the way the unit is operating, the following list of diagnostic count codes is provided.

Code	Function
940	Reads all 4 diagnostic counts (add 0 to clear all 4)
940 1	Reads Call In Count (add 0 to clear)
940 2	Reads Dial Out Count (add 0 to clear)
940 3	Reads Acknowledged Alarm Count (add 0 to clear)
940 4	Reads Power Failure Alarm Count (add 0 to clear)
940 0	To Clear all Counts

7 Using the Alarm Ready Schedule Feature

7.1 Definition

An Alarm Ready Schedule is defined as an interval of time during which the Verbatim autodialer is ARMED and "Ready" to respond to alarm conditions. Alarm Ready Schedules can be automatically started according to times and dates entered by the operator. An Alarm Ready Schedule commences with the Verbatim autodialer becoming REARMED. (If the Verbatim autodialer was previously not DISARMED then the schedule will still be commenced at that time.) Once the Alarm Ready Schedule has commenced the Verbatim autodialer will continue in an ARMED state until the end of the Alarm Ready Schedule, at which time the Verbatim autodialer will be automatically DISARMED. Once an Alarm Ready Schedule has commenced it is said to be "active."

There are three steps to programming for Alarm Ready Scheduling:

- Date and time setting
- Enter alarm start and stop times
- Enable the Alarm Ready Scheduling feature using code `966 N`.

7.2 General Descriptions

Alarm Ready Schedules can be viewed as really nothing more than an automated way of pressing the REARM/DISARM button. Therefore, if an alarm occurs while the Verbatim autodialer is DISARMED, no dial-outs will be made and the alarm will be automatically acknowledged. Correspondingly, if there is an acknowledged alarm when the Verbatim autodialer becomes REARMED and the input violation is still present then the Verbatim autodialer will begin calling after the trip delay has elapsed.

If the Verbatim autodialer is doing a sequence of alarm calls or Autocall calls at the time when an Alarm Ready Schedule should change the Verbatim autodialer's REARM/DISARM state the change will be delayed until after the end of the calling sequence.

Alarm Ready Schedules can be temporarily overridden by the operator pressing the REARM/DISARM button. However, if the REARM/DISARM button is pressed during an active Alarm Ready Schedule the schedule still remains active. If the operator DISARMs the Verbatim autodialer in the middle of an Alarm Ready Schedule the schedule will actually continue to it's ending time. It will then deactivate itself and attempt to DISARM the Verbatim autodialer just as if the Verbatim autodialer was still ARMED. If the operator DISARMs the Verbatim autodialer in the middle of an active Alarm Ready Schedule, then REARMs the Verbatim autodialer once again before the end of the Alarm Ready Schedule the schedule will remain active until its ending time. The schedule will then be deactivated and the Verbatim autodialer will be DISARMED.

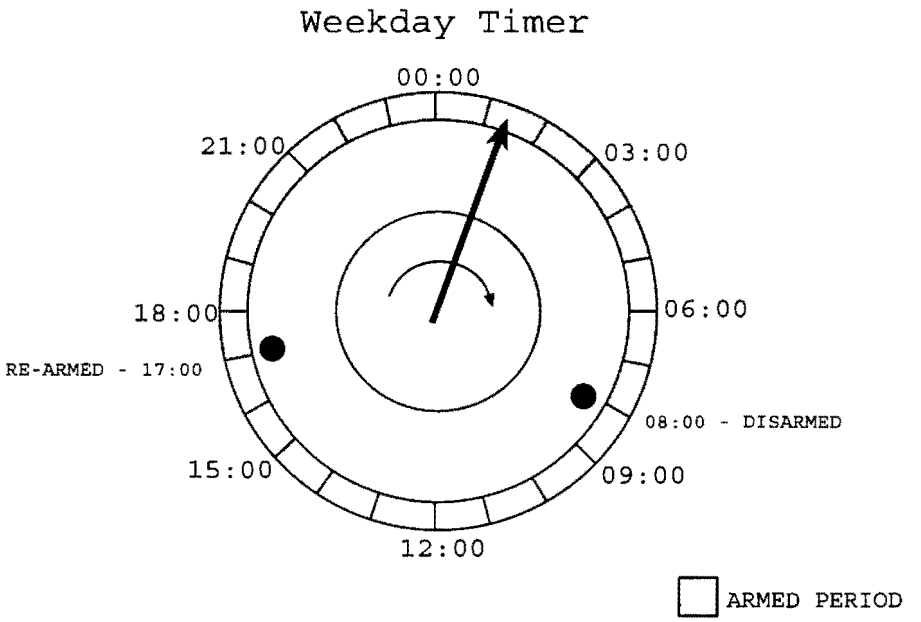

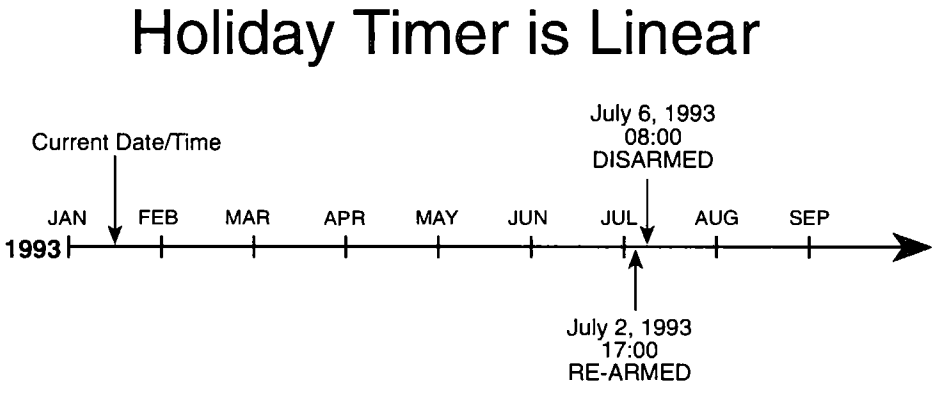

7.3 Alarm Ready Schedule Modes

There are three possible Alarm Ready Schedules modes: Weekday, Weekend & Holiday. Any combination of these three possible schedules may be enabled at one time, however, the Verbatim may only become REARMED or DISARMED by one mode at a time. See Section 7.7, "Alarm Ready Schedule Priorities." For example, you may have both weekday & weekend schedules enabled at the same time or you may have all three enabled at the same time. When the Verbatim becomes DISARMED or REARMED by an Alarm Ready Schedule it will verbally announce which mode caused the REARM/DISARM action. The Alarm Ready Schedule modes are as follows:

Mode	Schedule
Mode 1	Weekday Schedule
Mode 2	Weekend Schedule
Mode 3	Holiday Schedule

For example, if there was a weekday schedule enabled to REARM the Verbatim at 1700 daily, when the weekday schedule became active the Verbatim would say, "REARMED for mode 1". Also, when there is a local printer connected to the Verbatim , the mode of the Alarm Ready Schedule causing the REARM/DISARM (WEEKDAY, WEEKEND, or HOLIDAY) will be printed along with the current time.

7.4 Weekday Schedule Mode 1

The weekday schedule will REARM the Verbatim autodialer daily at the programmed weekday REARM time and DISARM the Verbatim autodialer daily at the programmed DISARM time. If no weekend schedule is enabled (via the Alarm Ready Control Number settings) then the weekday schedule applies everyday, Monday through Sunday. As noted below, the weekend schedule is overridden by the weekend and holiday schedules.

7.5 Weekend Schedule Mode 2

If programmed, the weekend schedule operates once a week. The weekend schedule is set by factory default to be Friday through Monday. If the defaults are used the Verbatim autodialer could be REARMED every Friday afternoon at 1700 and DISARMED again every Monday morning at 0800. The weekend schedule could be changed from the defaults, for example, so that the Verbatim autodialer would be REARMED on Saturday and DISARMED on Monday (for organizations with 6 day work-weeks).

When the weekend schedule is enabled the weekday schedule will be overridden. In other words, there would be no DISARMING of the unit at 0800 Saturday morning.

By default, the weekend REARM/DISARM times are set to be the same as the weekday REARM/DISARM times. However, non-default weekend REARM/DISARM times may be entered if the operator so chooses.

Therefore, if personnel regularly leave early on Fridays then the REARM time could be set to 1500 instead of the usual 1700.

7.6 Holiday Schedule Mode 3

The Holiday schedule is a one-shot, non-recurring schedule which overrides all of the other schedules.

The Holiday schedule will be set by factory default to some Holiday period in the past (such as last Christmas).

Note:

For the Holiday schedule only, the exact date is entered including the year. Once, the Holiday schedule has been run it is complete and finished until a new schedule, for some date in the future, is entered.

To use the Holiday Alarm Ready Schedule, the operator must enter the REARM date (month/date/year) and DISARM date (month/date/year).

For the time-of-day, the Holiday Alarm Ready Schedule always uses the Weekend REARM/DISARM times.

7.7 Alarm Ready Schedule Priorities

There is a priority among the Alarm Ready Schedules. The Holiday Alarm Ready Schedule has the highest priority, then comes the weekend schedule and finally the weekday schedule.

If all three Alarm Ready Schedules are to be active, a Holiday schedule will always start at it's scheduled time & date regardless of the state of the other schedules. When the Holiday schedule is over then the other schedules will resume.

Likewise, the Weekend Alarm Ready Schedule has priority over the Weekday Alarm Ready Schedule. The weekend schedule will always start at its programmed day-of-week and time regardless of the state of the weekday schedule. When the weekend schedule is over then the weekday schedule will resume.

7.8 Programming Alarm Ready Schedule Parameters

The following section explains the Verbatim autodialer codes to be used for programming Alarm Ready Schedules and the Alarm Ready Schedule Control Numbers. Alarm Ready Schedule parameters may be entered either at the front panel or over the phone.

There are some restrictions which must be remembered when entering DISARM/REARM times and ALARM READY SCHEDULE CONTROL NUMBERS.

1. When entering new schedule times, the REARM time must be later than the time the operator is programming the schedule. However, it may not be possible to "jump" into a schedule when exiting the programming mode. For example, if the current time is 1700 hours and the operator enters a weekday schedule to REARM daily at 1630 and DISARM daily at 0730, this new schedule would not start until the following day at 1630 hours.

   Conversely, assume that the current time is 1700 hours and that the operator goes into PROGRAM mode and enters a new weekday schedule to REARM at 1705 and DISARM at 0800. At this time, the operator can either return to NORMAL mode or continue in PROGRAM mode and do other programming. Even though it may be after 1705 when finally returning to the NORMAL mode, the weekday schedule will still begin (or have begun) at 1705 hours.

2. You cannot enter any holiday date values which will cause the holiday REARM or DISARM date and time to be earlier than the current date and time. As explained below, the holiday schedule uses the weekend times for the time-of-day of the holiday REARM and DISARM.
3. It's useful to understand that the Verbatim autodialer's internal count-down timers used for REARM/DISARM times are re-calculated as a result of the operator making certain Alarm Ready Schedule programming changes. Anytime a new REARM or DISARM date/time is entered, a calculation is made to determine the next REARM and DISARM for that particular schedule.

   Also, when the ALARM READY SCHEDULE CONTROL NUMBER is changed all REARM and DISARM date/times are re-calculated. Further, whenever the current date or time is set or changed by the operator, all REARM and DISARM date/times will be re-calculated.

7.9 Starting the Real-Time Clock Chip, Time and Date Setting

Use Program Code 935 7 ENTER to start the real time clock chip. This needs to be done only once at the time of the installation of the chip.

Time and date may be set or corrected with the following programming code entries:

- To check the date:

  `941 ENTER`

- To set the date:

  `941 MM DD YY D ENTER`

MM is the month (03 for March); DD is the date (07 for the 7th day of the month); YY is the year (89 for 1989); and D is the day of the week (1 for Sunday; 2 for Monday, etc.). Entry of D is optional.

- To check the time:

  `942 ENTER`

- To set the time:

  `942 HH MM SS ENTER`

HH are the hours in military time (13 for 1 PM); MM are the MM (09 for 9 minutes); and SS are the seconds. Entry of SS is optional.

- To clear the time and date back to 00:00:00 on 01/01/89:

  `935 7 ENTER`

7.10 Setting Alarm Start & Stop Times

CODE 961

READ WEEKDAY REARM & DISARM TIME (defaults: 1700 & 0800) Press 9 6 1 then ENTER to hear the Weekday REARM & DISARM times recited. Times will not be altered and new REARM & DISARM values will not be calculated.

SET WEEKDAY REARM & DISARM TIME Press 9 6 1 plus REARM & DISARM time. For example, 961 1600 0700 then ENTER to set REARM time to 1600 (4:00 P.M.) & DISARM time to 0700 (7:00 A.M.) The user is allowed to enter just the REARM time, i.e.; 961 1600 (enter). But, if the user wants to change the DISARM time then both the REARM & DISARM times must be entered.

CODE 962

READ WEEKEND REARM & DISARM TIME (defaults: 1700 & 0800) Press 9 6 2 then (enter) to hear the Weekend REARM & DISARM times recited. Times will not be altered and new REARM & DISARM values will not be calculated.

SET WEEKEND REARM & DISARM TIME Press 9 6 2 plus REARM & DISARM time then ENTER, for example, 962 1500 0700 then ENTER to set REARM time to 3:00 P.M. & DISARM time to 7:00 A.M. The user is allowed to enter just the REARM time, i.e.; 962 1500 ENTER. But, if the user wants to change the DISARM time, then both the REARM & DISARM times must be entered.

CODE 963:

READ WEEKEND REARM & DISARM DAY-OF-WEEK (defaults: Fri. & Mon.) - Press 9 6 3 then ENTER to hear the Weekend REARM & DISARM day-of-week (d-o-w) recited as a number from 1 to 7. Note: Sunday = 1, Monday = 2, etc. Day-of-week will not be altered and new REARM & DISARM values will not be calculated.

SET WEEKEND REARM & DISARM DAY-OF-WEEK Press 9 6 3 plus REARM & DISARM d-o-w then ENTER. For example, 963 6 1 then ENTER to set the weekend REARM day-of-week to Friday & REARM day-of-week to Sunday. The user is allowed to change only the REARM d-o-w if so desired, e.g.; 963 7 ENTER to set the REARM d-o-w to Saturday. But, if the user wants to change the DISARM d-o-w then both the REARM d-o-w & DISARM d-o-w must be entered.

CODE 964:

READ HOLIDAY REARM DATE (default: 12/24/95) Press 9 6 4 then ENTER to hear the Holiday REARM date recited. The Holiday REARM will not be altered.

SET HOLIDAY REARM DATE Press 9 6 4 plus REARM date. For example, enter 964 12 24 95 ENTER to set holiday REARM date to December 24, 1995. The new REARM date can not be before today's date.

Note:

The day-of-week date cannot be entered for a Holiday schedule.

CODE 965:

READ HOLIDAY DISARM DATE (default: 12/26/95) Press 9 6 5 then ENTER to hear the Holiday DISARM date recited. The Holiday DISARM will not be altered.

SET HOLIDAY DISARM DATE Press 9 6 5 plus REARM date. For Example, enter 965 12 26 95 ENTER to set holiday DISARM date to December 26, 1995. The new DISARM date can not be before today's date.

Note:

The day-of-week date cannot be entered for a Holiday schedule.

7.11 Enabling the Alarm Ready Schedule Feature

CODE 966

READ ALARM READY SCHEDULE CONTROL NUMBER (default: 0) Press 9 6 6 then (enter) to hear the Alarm Ready Schedule Control Number recited. The Control number will not be altered and new REARM & DISARM values will not be calculated.

ALARM READY SCHEDULE CONTROL NUMBER HAS THE FOLLOWING MEANING:

0 OFF No Alarm Ready Schedules executed. Also used to reset all active Alarm Ready Schedules.

1 Only the Weekday Alarm Ready Schedule will be active. (Daily: Monday-Sunday) Default: REARMED everyday 1700 & DISARMED everyday 0800.

2 Only Weekend Alarm Ready Schedule will be active. Default: REARM every Friday 1700 & DISARM every Monday 0800.

3 Both Weekday & Weekend Alarm Ready Schedules will be active. Default: REARM daily at 1700 Monday-Thursday & DISARM daily at 0800 Tuesday-Friday. REARM Friday at 1700 & DISARM Monday at 0800.

4 Only Holiday Alarm Ready Schedule will be activated. Default: REARM at 1700 December 24, 1990 then DISARM at 0800 December 26, 1990

5 Both Holiday & Weekday Alarm Ready Schedules will be activated. Default: REARM daily at 1700 & DISARM daily at 0800. REARM at 1700 December 24, 1990 then DISARM at 0800 December 26, 1990.

6 Both Holiday & Weekend Alarm Ready Schedules will be activated. Default: REARM every Friday at 1700 then DISARM every Monday at 0800. REARM at 1700 December 24, 1990 then DISARM at 0800 December 26, 1990.

7 Holiday, Weekend & Weekday Alarm Ready Schedules will be activated. Default: REARM daily at 1700 Monday-Thursday then DISARM daily at 0800 Tuesday-Fri. REARM every Friday at 1700 then DISARM every Monday at 0800. REARM at 1700 December 24, 1990 then DISARM at 0800 December 26, 1990.

Note:

Whenever a new Alarm Ready Schedule Control Number is entered all REARM & DISARM values will be recalculated. Any active Alarm Ready Schedules will be halted and the Verbatim autodialer will be left in which ever REARM/DISARM state it was last in.

7.12 Factory Defaults

Activity	Schedule
Weekday REARM time	1700
Weekday DISARM time	0800
Weekend REARM day-of-week	Friday
Weekend DISARM day-of-week	Monday
Weekend REARM time	1700
Weekend DISARM time	0800
Holiday REARM date	12/24/90
Holiday DISARM date	12/26/90
Holiday REARM time	always same as Weekend REARM time
Holiday DISARM time	always same as Weekend DISARMtime
Alarm Ready Control Number	0 (all schedules disabled)

Note:

Both Weekend times are initially the same as their respective Weekday times, but can be reprogrammed.

7.13 Weekday and Weekend Alarm Ready Schedule Programming Example

For the following example assume that personnel are present at a plant being monitored by the Verbatim autodialer during normal business hours, Monday through Friday, 7 A.M. to 4 P.M. Assume further that there is someone at the plant every Saturday from 7 A.M. until 12 Noon and that the personnel would be aware of any alarm conditions at the plant and would not want the Verbatim autodialer to be making calls to phone numbers in its phone number list.

In this example, the Verbatim autodialer should be:

- REARMED every weekday evening at 1600
- DISARMED every weekday morning at 0700
- REARMED every Saturday at 1200 noon
- Stay in the ARMED state until it is DISARMED every Monday at 0700

For the example, use the following steps:

1. Verify that the current time is one of the times when the Verbatim autodialer is DISARMED, i.e.; during normal workday hours. It is important that the time be the current time, since any Alarm Ready Schedule begins with the Verbatim autodialer becoming REARMED and ends with the Verbatim autodialer becoming DISARMED.

   If a user were to set up a repeating Alarm Ready Schedule (weekday or weekend) during the time the Verbatim autodialer was to be ARMED, the programmed schedule would not actually begin until the next time that schedule was to take effect. For example, if the current time was 1630 and a weekday schedule was being programmed, that weekday schedule would not actually start until the next day at 1600.
2. Press the PROGRAM key to put the Verbatim autodialer into the program mode.
3. Set the current date and time: (if not already set)
   a. Enter CODE "941 MM DD YY d" followed by ENTER

      Where:

      MM = 2 digits for month, DD = 2 digits for date,

      YY = 2 digits for year, and d = 1 digit for day-of-week.

b. Enter CODE "942 HH MM SS" followed by ENTER

Where:

HH = 2 digits for hours, MM = 2 digits for minutes,

SS = 2 digits for seconds.

4. Set the Weekday REARM/DISARM times:

   Enter CODE "961 1600 0700" followed by ENTER to set the REARM time to 1600 and the DISARM time to 0700.

5. Set the Weekend REARM/DISARM times:

   Enter CODE "962 1200 0700" followed by ENTER to set the weekend REARM time to 1200 and the weekend DISARM time to 0700.

6. Set the Weekend REARM/DISARM day-of-week:

   Enter CODE "963 7 2" followed by ENTER to set the weekend REARM day-of-week to Saturday and the Weekend DISARM day-of-week to Monday.

7. Enable both the Weekday and Weekend Alarm Ready Schedules:

   Enter CODE "966 3" followed by ENTER to set the Alarm Ready Schedule Control Number to 3 to enable both the Weekday and the Weekend Alarm Ready Schedules.

Note:

If the Verbatim autodialer is configured with a local printer, a summary of all of the REARM and DISARM times will be printed.

8. Return to the Normal mode and make sure the Verbatim autodialer is DISARMED.

8 Maintenance, Testing, and Battery Replacement

Regular testing is the main element of a maintenance program for ongoing Verbatim autodialer reliability. The test should include interrupting AC power to the Verbatim autodialer for at least 4 hours to verify the gel cell battery maintains Verbatim autodialer operation for that time. You may wish to disconnect the phone cord to avoid nuisance calls during the test period.

Note:

The LOBAT light on the Verbatim activates whenever the charge or discharge current for the rechargeable battery exceeds a certain level. If the battery is not fully charged (as following installation or following a power failure) then the charging current will activate the light. If the battery is currently being discharged (as during a power failure) the light will be activated. The LOBAT light does not necessarily warn of a battery wearing out. It should be considered a secondary indication of battery and charger activity.

The gel cell battery is much like a car battery. That is, at the end of its life when called on to deliver power, it discharges very quickly without prior warning. The best protection is to replace the battery every 3 years regardless of any test results.

The battery is a *Power Sonic PS 640, 4 AH 6 volts*

You may order a replacement battery from RACO at the address below:

RACO Manufacturing and Engineering Co.
1400 62nd Street
Emeryville, CA 94608

Or from:

Power Sonic, Redwood City, CA; (415) 364-5001

See Section 9.2, "Phone Support Procedures," and Section 9.3, "Returning Parts to the Factory," for more information.

9 Troubleshooting Tips

9.1 What's The Problem?

Unit is dead: no lights or voice.

If the unit will not respond to the ON/OFF key, verify that the battery is connected. Verify that there is 120 volts AC between the WHITE and BLACK wire terminals on TS3. Verify that the fuse (1/4 amp slow blow) is not blown.

Unit seems OK but will neither answer nor dial out on phone line.

This assumes that you hear a voice report at the panel when you press CHECK STATUS. With the NORMAL light lit, test the phone line by pressing DIALOUT. The PHONING light should light and you should hear a dial tone.

If you do not hear a dial tone, open the door of the unit and verify that relay K1 is correctly seated in its socket, with its indentation mark facing downward. Check the phone line and its connection with a DC voltmeter and/or a separate telephone handset. Verify the presence of about 50 volts DC between the RED and GREEN conductors on phone line terminal strip TS2. This voltage will drop to just a few volts when the Verbatim autodialer or other connected phone device goes off hook (PHONING light lit).

If you do hear the dial tone after pressing DIALOUT, press the digits of a valid phone number. You should hear the loud clicks of relay K1 (for pulse dialing) or else the tones of tone dialing, as you press each digit. The dial tone should cease after you have entered the first digit. Continue until you have dialed the complete phone number. You should now hear the sound of ringing and someone answering at the other end. End the call by pressing NORMAL.

Unit answers incoming calls, and also goes into alarm when it should and attempts to dial out, but does not reach dialed number.

First, verify whether the unit is actually attempting to dial out, as evidenced by pulse dialing clicks or tone dialing sounds followed by message recital. If not, then see the separate problem below, "Unit does not go into alarm when it should".

If your unit has previously been programmed for Automatic Tone/Pulse select (via code 917 2 or 917 3) and has been left connected to a phone line for several minutes, then you can assume that the correct dialing mode for your phone line has already been selected. Again, refer below to "Unit does not go into alarm when it should."

If Automatic Tone/Pulse select is programmed OFF (via code 917 0 or 917 1) and you hear the clicks or tone dialing sounds, but the dial tone does not cease, perhaps your phone system requires the opposite mode of dialing (pulse vs tone) from its presently set mode. Read the present mode by pressing PROGRAM 9 0 1 ENTER. Then set the opposite by entering 9 0 1 1 (to change to tone dialing), or 9 0 1 0 (to change to pulse dialing). Then press NORMAL and repeat the manual DIALOUT procedure as described above.

Verify that you have programmed complete phone numbers including any area codes or "1" prefixes that might be required to complete the call.

Consider whether your phone system requires a prefix such as 9 to be dialed, followed by a delay period (to access an outside phone line) before dialing out. If so, see Section 3.2, "Programming Phone Numbers."

Unit dials out, but will not answer incoming calls.

Check programmed ring delay by pressing PROGRAM 9 0 6 ENTER. If it is set for a number larger than one, the Verbatim autodialer is not supposed to answer until the corresponding number of rings has been received. Try setting it back to 1 using code 9 0 6 1 ENTER. If the unit still will not answer incoming calls but is able to dial out, try plugging a regular telephone into the same phone jack in place of the Verbatim autodialer and see if it rings. If the problem is not the phone line, try temporarily connecting test point C to test point D on the main circuit board, for a period of about 5 seconds and see if it "answers" with the PHONING light and a voice report, then call the factory for advice.

Unit will not go into alarm when it should.

This is usually the result of incomplete understanding of how the Verbatim autodialer manages alarms.

For the Verbatim autodialer to go into Unacknowledged Alarm and Dial Out, a violation must be continuously present for the Alarm Trip Delay time. At least one phone number must be programmed. The unit must not be in the DISARMED state. And, the channel that has the violation must not already be in an acknowledged alarm state, since acknowledged alarm status for a given channel (including power failure) precludes further activity on that channel until that status is cleared. Refer to Section 5, "Using Your Verbatim autodialer," for a discussion of how the unit manages alarms.

To clear the acknowledged alarm status of all channels including power failure, starting with the NORMAL light lit, press DISARM/RE-ARM to get the flashing DISARMED indication, then press it again to re-arm the unit with all acknowledged alarm statuses cleared. Now any violations lasting longer than the Alarm Trip Delay will cause unacknowledged alarms and dialing.

Unacknowledged alarm status is indicated by the corresponding channel number flashing. Acknowledged alarm status is indicated by the same light remaining on continuously without flashing.

If you don't observe this, press PROGRAM and then press 7 0 1 ENTER to check your first phone number. Press 9 0 2 to check the Global (overall) Alarm Trip Delay. For the specific channel ZZ (2 digits) that you are attempting to create an alarm on, also press 6 ZZ to check for any longer Individual Alarm Trip Delay setting.

Check the Normally Open/Normally Closed alarm criteria programming for this channel by pressing 5 ZZ. Make sure it is not set for No Alarm or for Run Time Meter, since these settings would not allow an alarm. Now, for example, if the channel is configured Normally Open, you will want to temporarily provide a Closed Circuit at its input to trip the alarm. You can directly read and verify the Open/Closed status you are applying by pressing 0 ZZ 0. You may also use a DC voltmeter to trace your circuit connections. With the Verbatim autodialer turned on, an Open Circuit to a channel contact input reads 5 volts DC with respect to the "C" terminals or electrical ground. A Closed Circuit reads zero volts.

Unit keeps calling when it should not.

Be sure that the initial alarm call is in fact being acknowledged. The unit will specifically state "alarm is acknowledged" at the moment you successfully acknowledge the call. The unit will accept a tone acknowledge only following the prompting warble beep.

Also, be sure that the alarm violation has been corrected. Otherwise, even if the alarm is acknowledged, when the Alarm Reset period times out, dialing will begin again.

Write down exactly what the unit recites when it gives the unwanted call. This provides valuable guidance as to the cause and correction of the problem. You may need to lengthen the Alarm Trip Delay in order to minimize nuisance alarms, particularly the power failure Alarm Trip Delay (code 920). If you hear an alarm message with the phrase "now normal" added at the end, it means that the violation occurred long enough to trip the alarm but has returned to normal by the time you are hearing the report. In the case of power failure, if the power has been restored by the time the message is being heard, the message will be "Power is on". The fact that power is mentioned at all lets you know that there has been a power failure lasting longer than the power failure Alarm Trip Delay. Power will continue to be mentioned in any phone call or front panel status check, until the Alarm Reset time expires.

Unit is continuously "locked" in on state, or is behaving erratically.

Environmental factors such as lightning or power surges may have caused program lockup. With the unit turned on, use a screwdriver blade to momentarily connect the two pins on Jumper Block JB5 (see diagram Appendix H, p. H-26).

If this does not return the unit to normal operation, next try jumping the 2 pins on JB3. This latter step will erase all user programming and recorded messages, so all user programming and messages will need to be re-entered.

9.2 Phone Support Procedures

Make sure you have the following before you call:

- Serial #: Found inside front panel. If you are not at the unit, call the unit up and enter program code 968. This will give you a number that our Customer Support Department can reference.
- Note the unit's symptoms: Exact speech pattern, what it is saying, if it is calling or not. The more specific and accurate you are in describing the symptoms, the quicker the Customer Support Department will be able to diagnose and troubleshoot the problem. In many cases, it may save a return to the factory.

THEN call 1-800-449-4539 for Customer Support.

If the Customer Support determines that the unit needs to be sent to the factory for repair, you will be given a Return Materials Authorization (RMA) number.

9.3 Returning Parts to Factory

Pack all parts well! To avoid extra charges, return any removed chips card guides or daughter boards to the factory at the address below:

RACO Manufacturing and Engineering Co.
1400 62nd Street
Emeryville, CA 94608

Remember to:

- Put return address on package.
- Include a packing slip.
- Have serial # and RMA # handy when you call in for tracking.

A Verbatim Series SFP Autodialer

The following is an instruction supplement for the Verbatim Series SFP autodialer. This supplement describes differences between the Verbatim Series SFP, and the Series VSS.

The Series SFP is a modified Verbatim autodialer which omits the front panel keypad and some of the front panel LED indicators. The primary practical difference between the two models is that the programming for the Series SFP must be done over the phone, whereas programming for the Series VSS may be done over the phone or at the front panel.

The enclosed diagram of the front panel of the Series SFP (p. A-2) replaces the Series VSS diagram on page 2-5 of this manual. A supplemental diagram of the inside view of the front door panel (p. A-3) is also enclosed, showing the location of the ON/OFF switch.

The practical differences to consider in programming and using the Series SFP are explained below.

A.1 Programming the Series SFP from a Remote Telephone

All programming of the Series SFP Verbatim autodialer is done from a remote Touch Tone telephone. This method of programming the product is described in Section 5.7 of this manual, and it is also more briefly referred to at other places in the manual such as Sections 4.2 and 4.3. With the Series SFP, this is the sole applicable means of programming. Therefore an "advance" description of over-the-phone programming follows.

When you call the Verbatim from any Touch Tone telephone, it will answer and begin reciting its message. At the end of each round of messages, you will hear a warble tone. If you press a command tone "1" immediately following this tone, you will the Verbatim autodialer will then be in Program Mode, and you will be prompted to enter a program code.

A chart listing the program codes is located in Section 6.1 of this manual. This section also includes some guidelines for using the program codes, and a more complete description of the programmable items is located in Section 6.2.

Program code entries generally consist of three digits, which may or may not be followed by additional followup values, before you complete the entry by pressing the # key twice. You will hear a spoken confirmation of each numerical tone digit as you issue it. There is no spoken response to the # or * key.

Verbatim Series SFP Front Panel Diagram

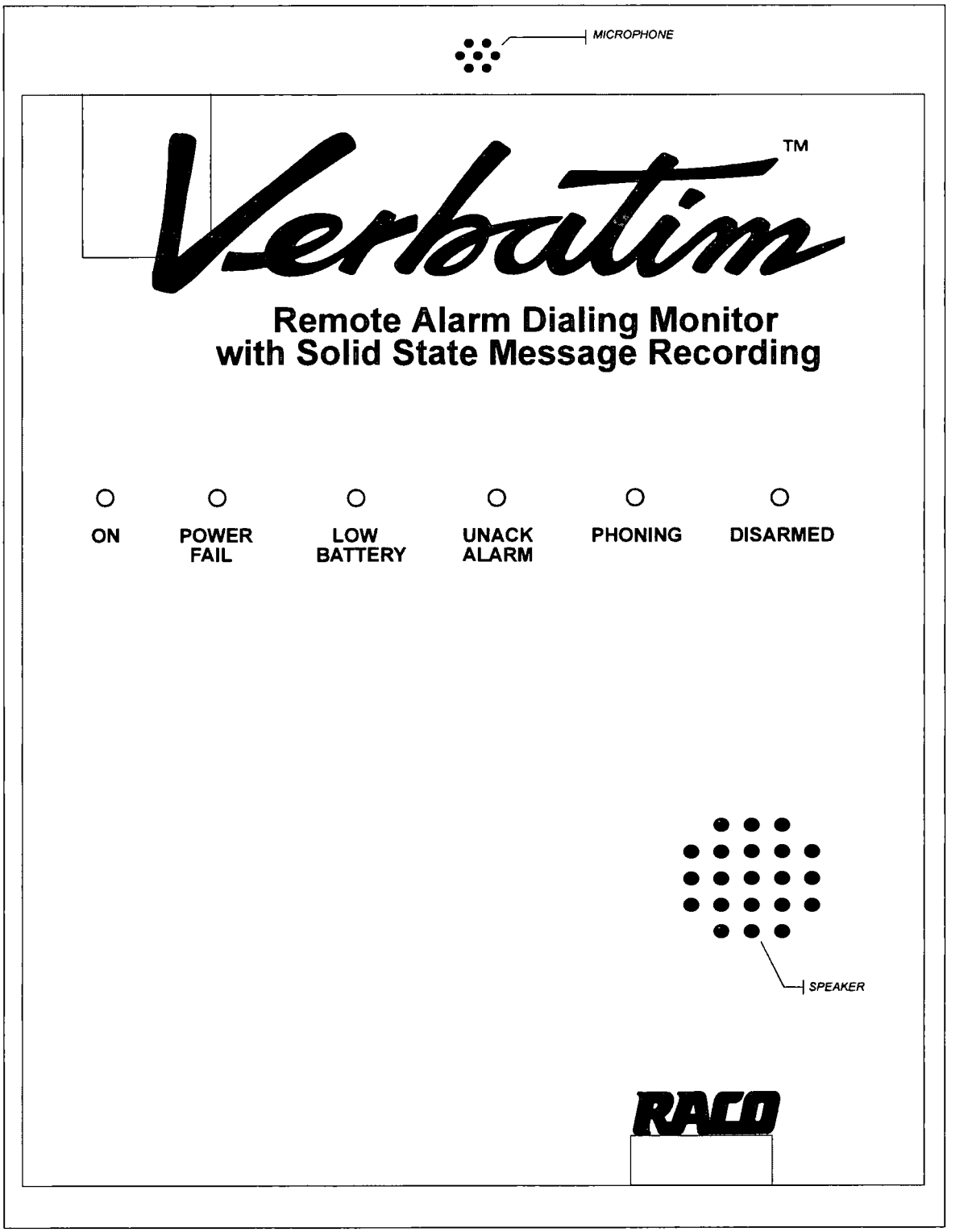

*** A discharged battery may take up to a day to fully charge. Meanwhile, light may remain on.**

**** During AC power failure, all illuminated LED's will flash to conserve battery power.**

Verbatim Series SFP Inside Front Panel ON/OFF Switch

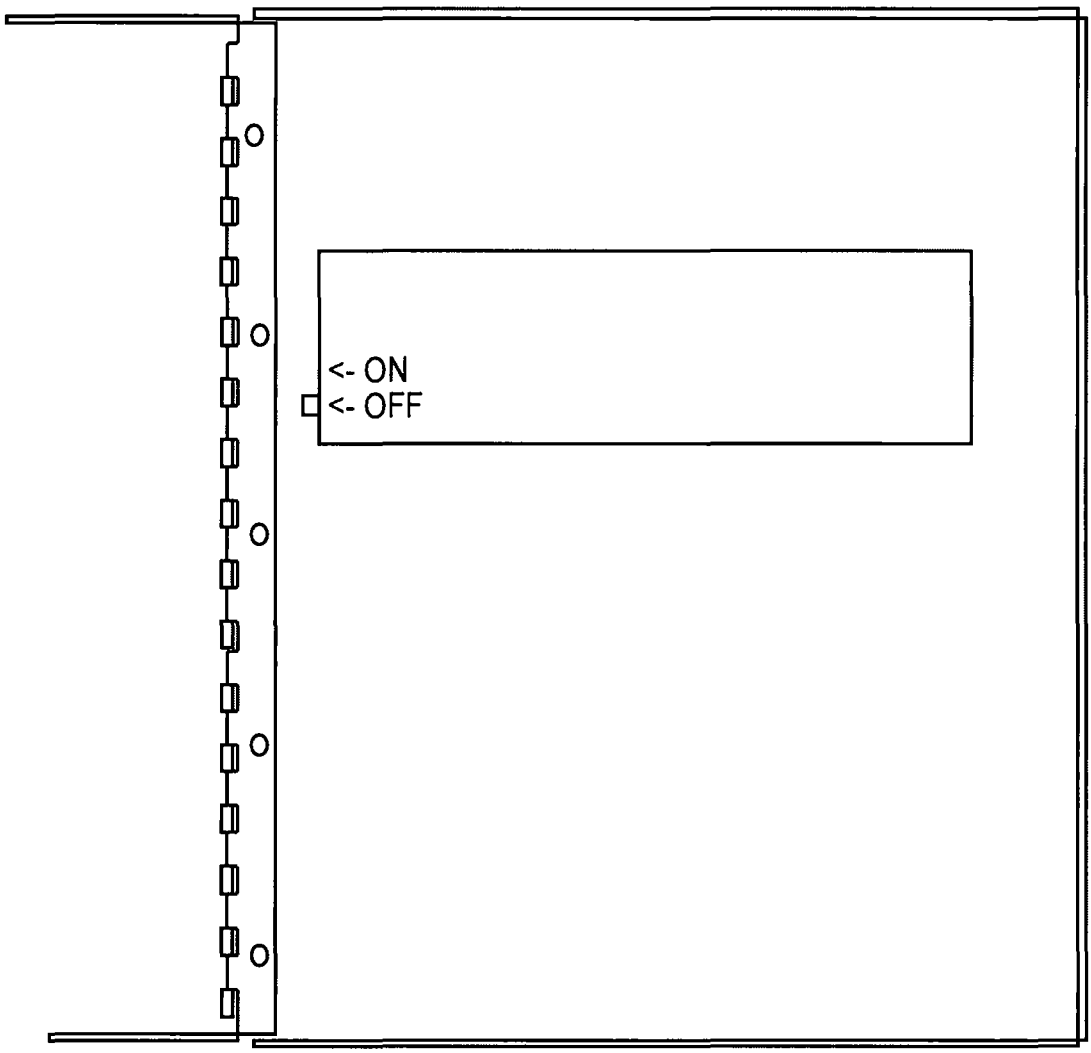

Inside view of front panel, showing ON/OFF switch

Note:

The procedure of pressing the # key twice, is to be used in relation to all references throughout this manual to the term, "ENTER."

In general, if you enter just the three tone digits followed by # #, you will hear the present setting or value for that program item. If you include additional values before the # #, the new value will replace the existing setting or value. In either case, the voice report will provide confirmation of the updated program setting or value.

Sometimes there is need to include a decimal point or a minus as part of a value entry. Also, if you make a mistake as you are issuing tone digits, you will want to cancel the entry. The conventions for these functions are as follows:

CANCEL	* *
ENTER	# #
POINT	*
MINUS	#

To end a phone call after programming, press # # without any prior tone digit. The Verbatim autodialer will then issue a prompting warble tone which is an opportunity to re-enter a "1" if you did not really want to end the call. It will then say, "Goodbye," and end the call.

Refer to Section 5.7 for a description of the other command tones that may be used in place of the "1" for special purposes.

A.2 Programming and Testing

The following sections provide a sequential reference to this manual regarding the relevant differences and similarities in instructions for the Verbatim Series SFP.

A.2.1 Resetting (Clearing) the Unit

Caution:

The following step erases all user programming including recorded messages so normally it is done only at initial setup.

Turn the unit on if it is not already on, via the switch at the rear of the front panel door. From a touch tone telephone, place a call to the phone number of the unit, and at the sound of the warble tone, issue a command tone "1" as described above.

To clear the system of all programming, in program mode as described above, issue:

9 3 5 9 # #

As always, if you make an error in issuing tone digits, press * CANCEL and start again.

A.2.2 Programming Phone Numbers

Essentially the same as Section 3.2 in this manual.

A.2.3 Programming Input Channels

Essentially the same as Section 3.3 in this manual.

A.2.4 Initial Testing

Temporarily place all input signal sources into their alarm state, long enough to satisfy the alarm trip delay. The unit will begin dialing the first phone number, perhaps before you have managed to get all the inputs into an alarm indication state. You should hear the a dial tone and then the sound of ringing, and then the sound of someone answering the call. Testing consists in verifying that the call is actually received at the first phone number, and that all the alarm messages are recited.

Your Verbatim Series SFP autodialer is now able to operate, having at least one dialout phone number programmed, and having its input channels configured. However, you may wish to record your own voice messages (Section 4) or perform special advanced programming items (Section 6) before referring to Section 5 on using your programmed Verbatim Autodialer.

A.3 Recording Messages In Your Own Voice

Essentially the same as Section 4 in the Owner's Manual, but following the guidelines for over-the-phone programming and recording.

A.4 Using Your Programmed Verbatim Autodialer

Section 5.7 is largely replaced by the discussion in Section 4 regarding over-the-phone programming, except for discussion of the alternative command codes "2," "3," "4," and "0."

Disregard Section 5.8.

A.5 Remainder of the Manual

All other descriptions in this manual may be followed and applied to the SFP with no practical limitiations.

Note:

The lack of front panel programming has specific impact on some minor aspects of specific programming items, as follows:

- **CODE 910:**

  SECURITY ACCESS CODE No Security Access Code may be programmed since this could only be programmed from the front panel keyboard.

- When a delay between dialing digits is needed (as for pager applications), it will only be possible to insert one delay period, since this is done over the phone by pressing the # key, and if this were pressed more than once in succession it would be interpreted as a Cancel Entry command. Therefore to get the length of delay desired, use 928 to extend the duration of the single delay from its default value of one second, to whatever value is needed.

- **CODE 926:**

  EXIT DELAY FUNCTION The Exit Delay function is not applicable in the absence of the front panel keyboard.

- The Speakerphone/Dialout function is not applicable in the absence of the front panel keyboard.

- There is no Parallel Printer Output.

- The speaker and microphone are present. However the microphone is limited to the function of optionally "listening in" since voice recording must be done via remote telephone.
- The On/Off function is controlled via the slide switch inside the front panel door. See diagram on page A-3 .

A.6 Enhanced Telephone Interface Features

The manual Section entitled, "Enhanced Telephone Interface Features," is generally applicable except that there is no front panel indication for telephone line failure.

B Analog Signal Input

B.1 Analog Connections

Refer to the diagram (page B-10) showing the VAN analog boards for connection of analog inputs. Be sure you follow the indicated positive and negative polarity indications, except in the case of TS705 temperature sensor inputs, for which positive and negative polarity does not matter. Two signal wires are required for each input. The terminal blocks can be unplugged for convenience. Because of the space constraints, it is best to use small gauge wire like telephone wire. If bulkier wire is needed outside the dialer, it is best to install a terminal strip outside the dialer to make the transition from the bulkier wire to the more compact wiring going into the analog input connection points.

Note:

Take care to route the incoming signal wires to one side of the enclosure or the other so that they do not interfere with the front panel circuit board when the unit's door is closed. Also, try to route the analog signal wires away from power wiring to minimize noise pickup.

B.1.1 Programming for Analog Channels

Each analog input will need to be programmed to specify:

1. The analog Input Signal Type (if other than standard 4-20 ma input).
2. The numerical value to be spoken at a corresponding minimum signal level.
3. The numerical value to be spoken at a corresponding maximum signal level. Items 2 and 3 amount to programming the translating scaling factors for each analog input.
4. In many cases you will also want to program high and low setpoint limits for each analog input.
5. You may also elect to replace the generic default voice message with your own recorded messages for any analog channel, as described in section 4.

B.1.2 Assignment of Input Channel Numbers

The unit automatically assigns the lowest channel numbers to whatever number of contact input channels exist on the unit (whether or not you are using them) and the analog channels are assigned channel numbers beginning with the next available number.

For example, the first analog input on a unit with 24 contact inputs and 16 analog inputs would be "channel 25" and the last analog input would be "channel 40". Note that since the unit's maximum LED display capacity is a total of 32 channels, on such a unit the final 8 analog channels would not have corresponding LED status indicators on the front panel. Further, note that on units with remote channels, the LED display may group inputs into a single indicator.

It is important that you have correctly determined the channel number assigned for each analog input channel before performing the following programming steps.

B.1.3 Programming the Input Signal Type

(You may skip this step if you are using 4-20 ma inputs).

The analog inputs are very flexible and can accommodate a variety of Input Signal Types, but the unit needs to know which type each input is being used for a given analog input. Note that in addition to programming the Input Signal Type, the physical component configurations on the VAN plug-in circuit card must match the Signal Type used. Normally this will have been handled in the process of ordering the unit and will not require additional user attention. If there is any doubt about this, refer to the markings on the rear of the VAN circuit board. If there is still any question, refer to the markings you find and also your unit's serial number, when contacting the factory.

- To program the Input Signal Type for input channel ZZ:

  `5 ZZ 7 N ENTER`

  where ZZ is the two-digit channel number, and N is a single digit as follows:

  0 for a 4-to-20 milliamp current loop input. This is the default setting, so if your inputs are 4-20 milliamp current loops, you may skip this step.

  1 for 0 to 1 volt DC signal input. In the case of larger signal levels, such as 0 to 10 volts DC, the hardware input circuitry on the VAN card will have been factory configured to pre-scale the signal to a range within 0 to 1 volt DC, and corresponding special scaling information will be provided to fit the particular application.

2 for a Raco Temperature Sensor input (sensor model TS705A), used to measure temperatures from -20 to +120 degrees F.

3 for additional types of special custom-specified signals.

Summary of Codes for Input Signal Type	
0 (default)	4-20 ma current loop
1	0-1 volt DC
2	Raco temperature sensor
3	Other special inputs

B.1.4 Programming the Scaling and Offset Factors

This set of steps is not necessary for inputs using a Raco Temperature Sensor, since these values will be automatically inserted if the parameter 2 is selected in the above step.

In the above step, accepting the default parameter of 0 for 4-20 milliamp inputs automatically provides for a spoken reading of 0.0 percent for the minimum (4 ma) signal input value, and 100.0 percent for the maximum (20 ma) signal, until you enter different factors.

In most cases, you will want to program the unit to give spoken reports in terms of the actual physical variables being monitored, such as water level in feet, etc. In general, you will need to determine the desired spoken numerical values corresponding to two widely separated (low end and high end) signal input values. Often this will be available from the overall system specifications. In other cases, this will be determined (or revised) based on actual on-the-spot observations. The Verbatim Autodialer offers the unique option of entering this scaling information based either on your particular system specifications (the System Specification method) or else on your real world observations (the Real World Method). Also, scaling information which you may have originally entered based on your system specifications may later be easily "fine tuned" based on real world observation.

In addition, you may wish to record your own identifying message to replace the default message, as described in the message recording section of the manual.

B.1.5 Additional Perspective on Scaling Factors

Analog Math

It may be useful, in comprehending the process of establishing the scaling factors, to visualize a graph which relates the water level in a tank to the input from a 4-20 ma transducer. To establish the relationship on such a graph, it is necessary to define two separate points, or coordinate pairs ideally at two widely separated points on the graph. For such a linear relationship any point on the "reading" (Y) may be calculated from the formula:

```
y = mx + b
```

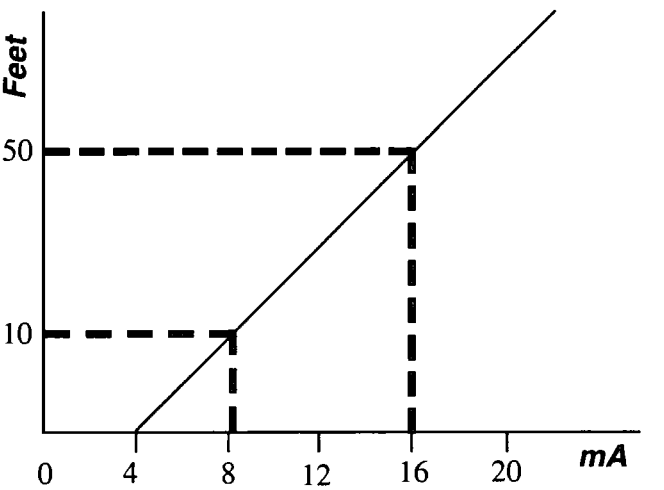

where m is the gain and b is the zero crossing point or Input (ma -> offset. The gain may be calculated from: m=(y2-y1)/x2-x1)

where x1, y1 is one coordinate pair on the graph and x2, y2 is the other.

Therefore, when you have chosen to enter non-default coordinates you are in fact setting the gain factor. This gain factor is taken along with the input signal type you have chosen which will define both the gain and offset.

Notice that each of the two points requires two separate coordinate pieces of information to define: the signal level and the corresponding water level. With two such points defined, an entire line or linear equation is defined, so that given any new signal level, we could use the graph to "look up" the corresponding water level. In operation, the Verbatim autodialer measures the signal level presented to it, and then calculates the corresponding physical value, all based on the line or linear equation defined by your entry of the high end and low end scaling information whether done by the System Specification Method or the Real World Method.

Be sure that the correct Input Signal Type setting is entered as described above, because changing the Signal Type setting will overwrite the programming described next.

System Specification Method of Programming Scaling Factors

The following four codes must be entered to invoke scaling:

- For the low-end portion of the data for channel ZZ, enter the following pair of codes:

  `5 ZZ 1 X.XXXX ENTER`

  where X.XXXX is the low input signal value chosen, within the bounds of input signal type.

  `5 ZZ 2 YYYY.YYYY ENTER`

  where YYYY.YYYY is the desired spoken numerical value

- Then to complete the scaling factors for this channel, enter the following pair of codes for the high-end portion of the data:

  `5 ZZ 3 X.XXXX ENTER`

  or

  `5 ZZ 3 POINT ENTER`

  for the high-end signal value

  `5 ZZ 4 YYYY.YYYY`

  for the high-end corresponding spoken value

Note:

For all analog value entries you may enter up to four digits before an optional decimal point, and up to four digits after, but simple entries (such as -20, 3.45, 500, 4, etc.) work as well.

Alternative Real World Method of Programming Scaling Factors

If the system specifications for the scaling factors are not known, or if you wish to adjust a previous entry to reflect real-world as opposed to system specification conditions, wait until the input signal or the physical variable happens to be near the low end of the scale. Enter the following pair of codes:

`5 ZZ 1 POINT ENTER`

which will automatically accept the present moment signal value as the low input signal value, rather than having to enter the value shown as X.XXXX above. Then, enter:

```
5 ZZ 2 YYYY.YYYY ENTER
```

where YYYY.YYYY is the corresponding low-end physical value which you observe in real-world terms.

At another time, when the signal or physical variable is toward the high end of the scale, enter the following pair of codes:

```
5 ZZ 3 POINT ENTER
```

which accepts the present signal level as corresponding to the high-end physical value which you enter as:

```
5 ZZ 4 YYYY.YYYY ENTER
```

Example:

It may already be known from your system's specification that for channel 6, a low-end signal of 4 milliamps corresponds to a desired spoken value of 34.5 feet of tank water level. In such a case, you would use the System Specifications Method to enter:

- for 4 milliamps

  ```
  5 06 1 4 ENTER
  ```

- for a spoken reading of 20.5

  ```
  5 06 2 20.5 ENTER
  ```

- for 20 milliamps

  ```
  5 06 3 20 ENTER
  ```

- for a spoken reading of 34.6

  ```
  5 06 4 34.6 ENTER
  ```

Then, suppose with the system in operation, you observe that the tank level is 31.7 feet, but the Verbatim reports a value of 31.45 feet. The discrepancy will most likely be due to a discrepancy of the sensor's actual output versus the theoretical system specification. Regardless, to correct for it, keeping in mind that the signal is presently near the high end of the scale, you would use the Real-World Method, entering:

- To reference the present signal level

  ```
  5 06 3 POINT ENTER
  ```

- To recalibrate 31.7 as the corresponding spoken value

  ```
  5 06 4 31.7 ENTER
  ```

Continue the example, there might also be a discrepancy toward the low end of the scale. Suppose on another day you observe a tank level of 22.5 feet but the Verbatim report 2293 feet. Since this signal is at the low end of the range, you would enter:

```
5 06 1 POINT ENTER
```

and

```
5 06 2 22.5 ENTER
```

Note:

These Real-World Method adjustments did not require you to measure any actual signal levels!

From that time on, assuming that the sensor maintains its calibration and has a linear output, the spoken value should track the actual value very closely. The Verbatim itself is much more accurate and consistent than almost any sensor available to connect to it. Note that the signal does not need to be exactly at the end of its range (e.g. 4 ma or 20 ma) for these programming steps. However, in general the wider the spread between the signal levels used, the better informed the Verbatim will be to reflect the actual relationship between the sensor's output and the real value being measured.

Note:

While the unit reports with very high accuracy and resolution, you do not need to enter your programming value to the same high degree of accuracy unless you choose to.

For TS705 Temperature Sensor Inputs

Selecting signal type "2" (TS705 sensor) will automatically load scaling factors as describe earlier. However, these automatically loaded scaling factors are not adjustable. If you want to be able to do Real World calibration adjustments for temperature sensor inputs, then instead of selecting sensor type "2", select sensor type "1" (0-1 VDC input) and enter scaling factors as follows:

```
5 ZZ 7 1 ENTER (Selects signal type 1)

5 ZZ 1 .843 ENTER

5 ZZ 2 -19.8 ENTER

5 ZZ 3 .316 ENTER

5 ZZ 4 120.1 ENTER
```

This gives the same scaling factors as would otherwise automatically result from selecting signal type 2, but it allows for subsequent adjustments using the Real-World adjustment method.

B.1.6 Programming High and Low Analog Setpoints

You should first enter the gain, offset and scaling factor programming described above before entering setpoints. Later, if you adjust the factors as described above, you may also need to adjust the setpoints correspondingly. Changing setpoint values after scaling is set could cause changes in the scaling values.

- To program a low limit setpoint for channel ZZ, use code:

  `5 ZZ 5 X.XX ENTER`

Note:

X.XX is the desired setpoint in terms of spoken units, rather than in terms of the signal value. You do not need to enter all four possible leading and trailing digits. Simple entries like 7 and 3.68 work as well.

- To program a high limit setpoint for channel ZZ, use code:

  `5 ZZ 6 X.XX ENTER`

Thereafter, whenever the measured value exceeds the setpoint for a continuous period exceeding the alarm trip delay, the unit will go into unacknowledged alarm and begin dialing to report the specific violation, also reporting the current measured value. As with contact inputs, if the input is no longer in violation at the moment of the report, the phrase "Now Normal" will be appended to that channel's report.

- To check an existing setpoint value, use the above codes but omit the value (X.XX).
- To turn off (completely disable) an unused analog channel so that it will not be included in status report, enter code:

  `5 ZZ 0 ENTER`

  where ZZ is the 2-digit channel number.

- To turn the channel on again, you must enter some high or low setpoint value for that channel.
- To turn off (disable) a high or low analog setpoint, while still leaving the channel able to report readings, enter a setpoint value of -0 for that particular setpoint. If you try to enter a setpoint value outside a wide signal range, the Verbatim will say "Error in number."

Note

The scanning time required by the unit to check all analog readings against established setpoints increases with the number analog channels. With 16 channels, the time can total on the order of one second, and this imposes a limit on how fast the unit can detect analog setpoint violations. Normally, this will not be noticed unless you set Alarm Trip Delays of less than two seconds, and there is no effect on the trip delay for contact channels in any case.

Refer to the following section for recording the corresponding voice messages other than the spoken numerical values.

B.1.7 Summary of Analog Programming Codes

Code	Description
Signal Type:	
5 ZZ 7 N	Select input signal type. 0 is default for 4-20 ma
Scaling:	
5 ZZ 1 X.XX or POINT	Low end signal value
5 ZZ 2 YYYY.YYYY	Corresponding low end spoken value
5 ZZ 3 X.XX or POINT	High end signal value
5 ZZ 4 YYYY.YYYY	Corresponding high end spoken value
Setpoints:	
5 ZZ 5 X.XX	Low alarm limit setpoint
5 ZZ 6 X.XX	High alarm limit setpoint
5 ZZ 5(6) -0	Disable low (high) setpoint
Disable Channel:	
5 ZZ 0	Turn off (disable) channel ZZ

B.1.8 Recording Speech Messages for Analog Channels

This information supplements the basic information in the manual on recording speech messages. Refer to that information before attempting to record any speech messages.

For analog input channels, the default message is "The present channel N reading is ..."

For any analog inputs, in place of the default messages you may plan to record a preamble message of the general form "The total water flow in gallons is" or "the main tank water level in feet is."

Use program code 1 ZZ to record the analog preamble message.

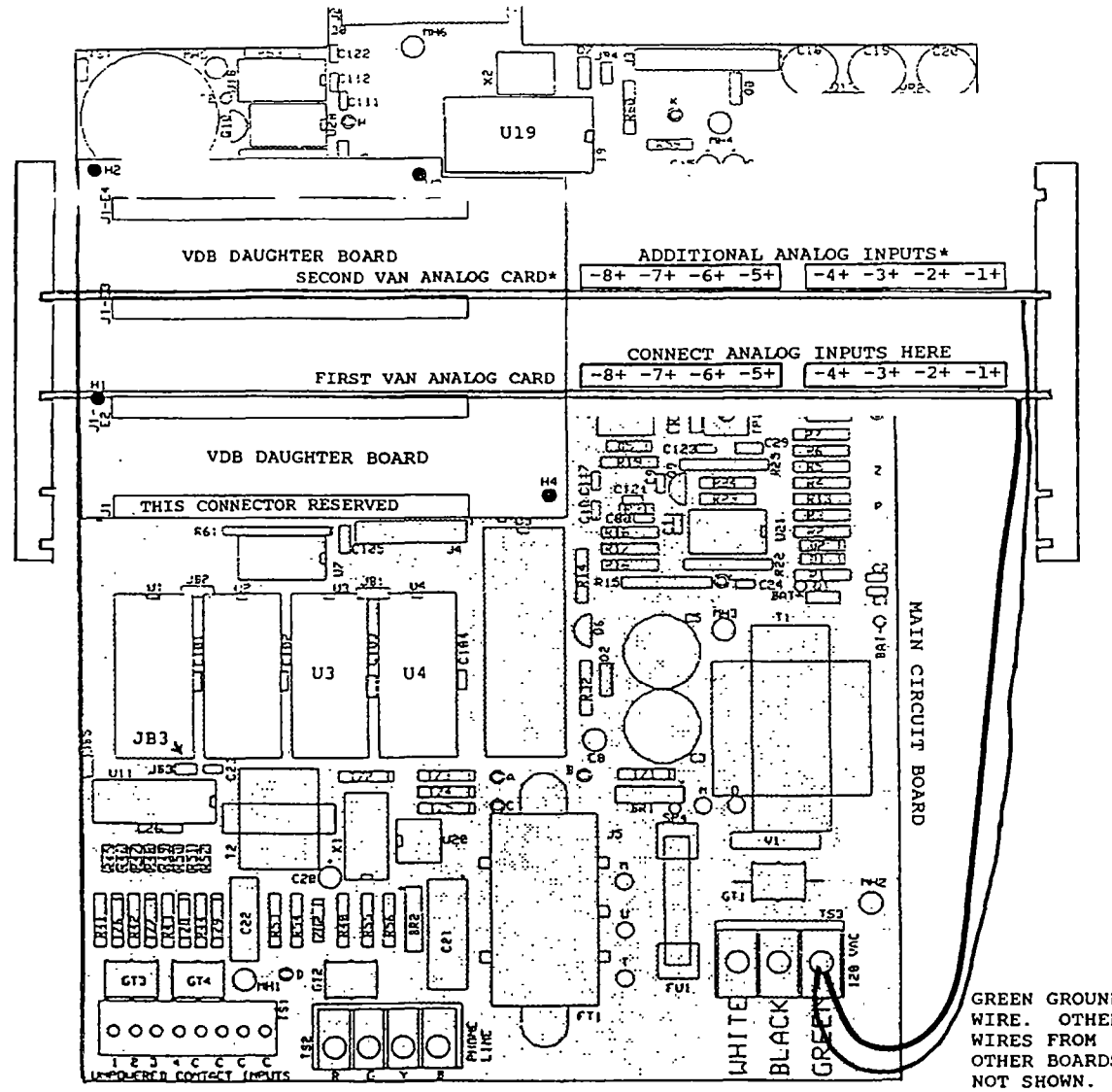

*UNITS EQUIPPED FOR 16 ANALOG CHANNELS WILL REQUIRE 2 VAN CARDS. THE SECOND (UPPER) CARD WILL BE FOR THE HIGHER NUMBERED ANALOG CHANNELS. THE SECOND VAN CARD IF ANY WILL HAVE ITS JB50 JUMPER STRAP IN THE UPPER POSITION.

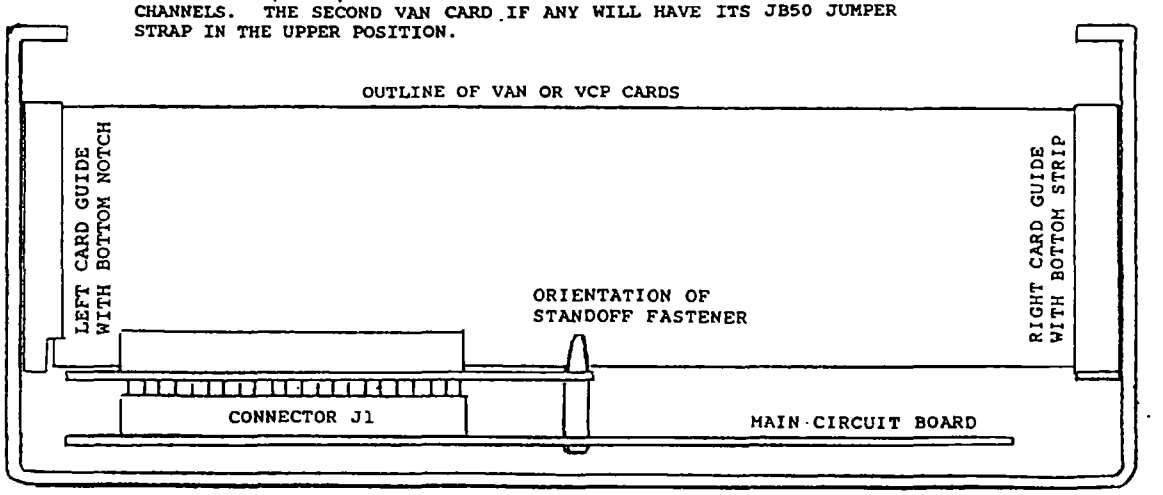

B.1.9 If Analog Inputs Do Not Work Correctly

Recheck programming settings, especially the Input Signal Type setting. Verify that the polarity of your input connections is correct.

In the case of 4-20 ma input, does the spoken value always reflect a 0 ma signal level? If so, the problem is presumably with the connection or the signal source. Use a DC meter to verify that both sides of the offending input are within 10 VDC of ground. A 4-20 ma current loop input should give a meter reading of about .07 volt per milliamp of current as measured across the two signal input terminals.

Are other instruments included in the same current loop? If they read correctly, temporarily disconnect the input to the Verbatim Autodialer. This should throw the readings of the instruments off scale. If there is no such effect, your wiring is not including the Verbatim autodialer in the loop. Verify that the type of signal source agrees with the physical configuration on the VAN card according to the marking on the back of the card.

B.1.10 Troubleshooting Analog Grounding Problems for Verbatim Analog

The most common analog signal type in use in the Verbatim marketplace is current loops, wherein the signal is a controlled DC current ranging from 4 to 20 milliamperes.

The loop consists of a current transmitter (consisting of a transducer and a supporting power supply which may or may not be packaged into one unit), and one or more receiving devices which measure and respond to the current signal they detect on the loop. The power supply voltage is typically 24 volts DC.

The terms "transducer" and "transmitter" are used interchangeably. The transmitter's job is to ensure that the current level accurately reflects the physical parameter which the transducer is measuring (typically a pressure or liquid level), regardless of what impedance it sees in the loop.

In order to do this, it presents whatever voltage across its terminals is needed to achieve the correct current flow. This voltage must be great enough to accommodate the total resistance in the loop. The typical resistance contribution presented by each receiving device is 250 ohms. However, the DC resistance presented by the Verbatim analog inputs is around 70 ohms (49.9 ohm precision resistor plus two 10 ohm surge standoff resistors).

In theory, all elements in the loop are isolated from any connection to electrical ground. This is intended to eliminate concerns about errors in the signal caused by conflicting ground or other conflicting connections.

In practice it is not unusual to have some element of the loop in fact tied to ground or to some other voltage source away from ground -- or if not directly tied, at least limited in its ability to depart from the ground or other voltage. As long as only one element in the loop is so committed, there is no problem since the other elements can freely accommodate as needed.

The Verbatim has its own limitations in this respect. It can only accommodate a departure from ground voltage potential, of 8 volts nominal, before its protective tranzorbs begin to conduct and clamp the signal. Such clamping when in direct conflict with some other voltage commitment in the loop, will not only cause incorrect readings by the Verbatim, but also cause the other elements in the loop to read and respond incorrectly.

This ability to accommodate departures of both sides (positive and negative) or the analog signal input, is called the common mode input voltage range. A truly isolated input would have as much common mode input voltage range as the voltage limitation of the isolation, typically over 1,000 volts.

The reason we do not provide isolated inputs is because it is bulky, and expensive to achieve accurate translation across the isolation barrier. Also, these days there has been a large shift to transformer and capacitive coupling schemes to achieve DC isolation, but these provide almost zero protection against the fast rise time transients induced by lightning. So, we need to be able to troubleshoot when a customer places one of our analog inputs into a current loop where there is another conflicting voltage commitment.

When this problem occurs, the customer will typically report that his loop works but is thrown off when our analog input is placed in the loop. Sometimes the disturbance takes the form of not just altering the DC current but causing parasitic oscillations in the loop. It may not be easily discernible whether the disturbance is or is not taking the form of a parasitic oscillation. Regardless, temporarily ungrounding the dialer or unplugging the analog card, will usually eliminate the disturbance.

The procedure for troubleshooting and correction of this problem is generally as follows: First we need to find out as much as we can about any preexisting, conflicting voltage commitments. To do this, have the customer unplug the card or unground the dialer so that the loop is not disturbed, and then use a voltmeter to check both the AC and the DC voltage readings at each node around the loop, with respect to electrical ground.

We hope there is not much AC signal present. If there is a strong enough AC component on top of the DC voltages, there will be disturbance to the extent that the peak level in the AC waveform exceeds the common mode input limitation of our analog input. In such a case the cause of the AC component of the signal needs to be found and eliminated, if the following procedure does not lead to a good result.

However, it is possible and even likely, that an observed AC signal is merely a "softly" induced hum that holds no sway when it meets any clamping introduced by our analog input. With this in mind, it may be best to defer even taking AC reading until after the DC oriented methods have proven unsuccessful.

With the main focus being the DC voltage readings, we are looking at some point on the loop that is much less than eight volts DC away from ground, and that is where the Verbatim input should be relocated in the loop. Chances are good that the Verbatim had previously been placed at a point on the loop well away from ground potential and that the relocation will end the problem.

An added step that may be useful in addition to the two sets of voltage readings (AC and DC), especially if the voltage readings seem to be erratic, is to have the customer use a jumper wire to temporarily connect some candidate point in the loop to electrical ground, and observe whether the loop is disturbed by this temporary grounding. If it is not, that is a good place to locate our input in the loop. In fact, this approach can be used without taking voltage readings at all. But if it does not work, then we do want the voltage readings in order to best understand what is going on.

Occasionally, something in the loop will cause there to be no available point in the loop that is close to ground potential. In such cases, if this cannot be changed, then the customer will need to install an optical isolator between the loop and our inputs. The customer may be referred to: Action Instruments, San Diego, CA, (619) 279-5726. Isolators cost $300 per loop.

C Remote Supervisory Control Output

C.1 Remote Supervisory Control (VRSC) Output Installation and Operation Instructions

This option allows you to turn connected equipment on and off from any remote Touch Tone telephone, or from an non-Touch Tone telephone with the use of a portable tone generator. Option VRSC-4 provides 4 outputs, VRSC-8 provides 8 outputs. The unit's voice guides and confirms your operations. Advanced features such as programmable length momentary activations are included. Control operations may also be performed from the unit's keyboard.

Connections are normally made by means of optically isolated solid state relays housed in a separate Output Relay Enclosure which requires its own 120 VAC power connection. In some situations, the user may choose to make connections directly to the transition outputs within the main unit.

If your unit was not originally equipped with this option, refer to the separate instructions for adding this option.

C.1.1 Mounting and Wiring Connections for Remote Supervisor Control

If you are using the separate Output Relay Enclosure normally supplied with this option, mount the enclosure within 3 feet of the Verbatim Autodialer, and make your output connections to the left hand row of terminal strip points within the separate enclosure, as shown in the diagram of the VRSC Output Relay Enclosure. Be sure that the correct type of plug-in Opto 22 relays are in place. The available types are:

Type	Value
OAC5	12 to 140 VAC, 2 amps
OAC5A	24 to 280 VAC, 2 amps
OAC5A5	120/240 volt AC, Normally Closed
ODC5	5 to 60 VDC, 2 amps
ODC5A	5 to 200 VDC, 2 amps
ORR 5	Reed relay dry contact output

RSC Supervisory Remote Control Output Box Diagram

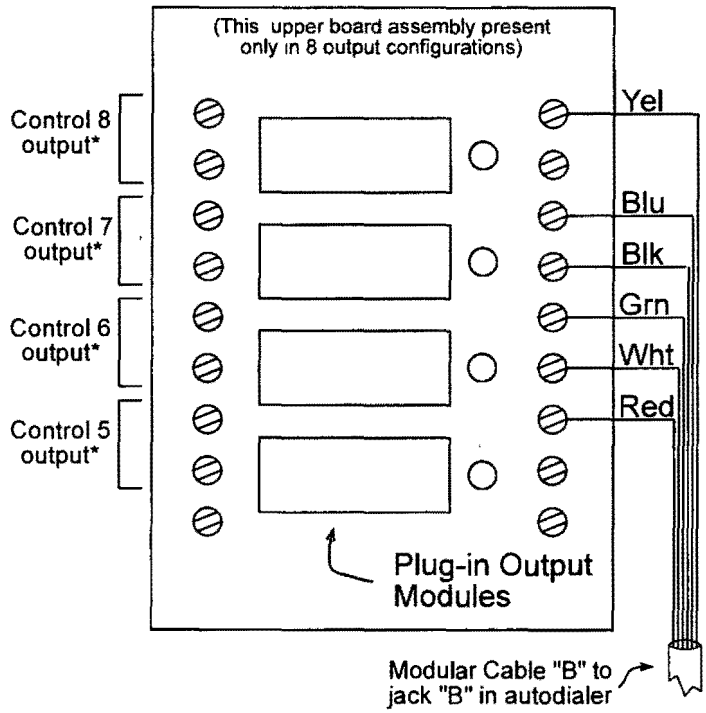

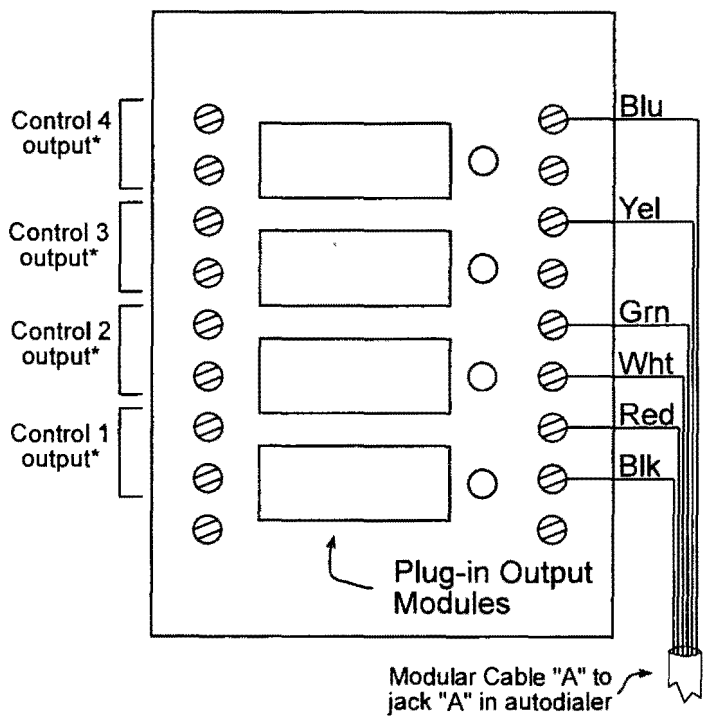

OUTPUT MODULE TYPES:

OAC5	12 to 140 VAC, 2 amps
OAC5A	24 to 280 VAC, 2 amps
ODC5	5 to 60 VDC, 2 amps
ODC5A	5 to 200 VDC, 0.67 amps
ORR5	Reed Relay Output

* If DC output modules are used, the lower terminal is the positive terminal, for each control output.

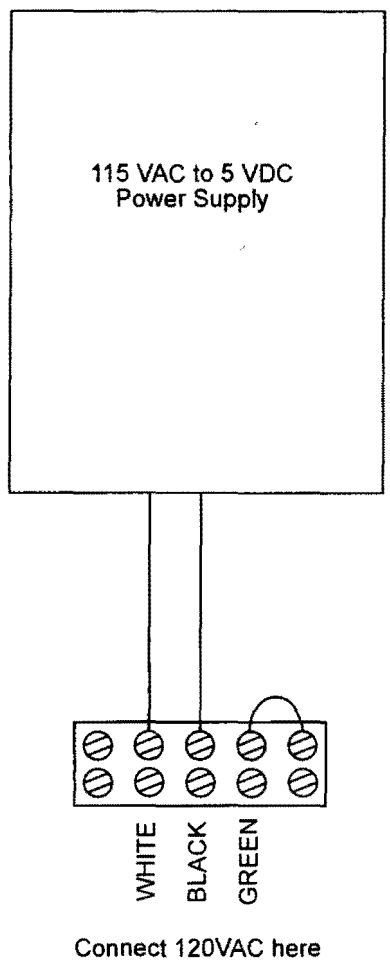

Unless ordered otherwise, type OAC5 is normally provided from the factory. Connect 120 VAC power as shown on this same diagram. Route modular "Cable A" through one of the entrance holes on the bottom of the Verbatim Autodialer, and plug it into J301 (the right-hand jack on the VCP circuit card, see diagram). The 8-output VRSC-8 option also includes a second modular "Cable B", connect this to the adjacent jack J302 on the VCP circuit card. Avoid routing these cables alongside power wiring and route them so that the front panel circuit board does not pinch them when the door is closed.

C.1.2 Optional Direct Connection Without Use of Output Relay Enclosure

The outputs on the VCP circuit card are NPN transistor open collectors capable of switching up to 12 volts DC at up to 500 ma, and thus these outputs may in some cases be connected directly to logic inputs of logic controllers, etc, although external pullup resistors may be required. Consult Raco for details. The color codes for VRSC cables "A" and "B" are:

Cable	Color Code
Cable A	
Common Return	Black
Output # 1	Red
Output # 2	Green
Output # 3	Yellow
Output # 4	Blue
Cable B	
Output # 5	Red
Output # 6	Green
Output # 7	Blue
Output # 8	Yellow

C.1.3 Remote Supervisory Control Operation

- To check the on/off status of output # N, use program code

  `9 5 N ENTER`

  where N is a 2 DIGIT output number (e.g. 01 for output # 1).

- To turn output # N ON, use program code

  `9 5 N 1 ENTER`

- To turn output # N OFF, use program code

  `9 5 N 0 ENTER`

- To turn output # N on for a specific number of seconds, use code

  `9 5 N 2 XXXXX ENTER`

  where XXXXX is the desired number of seconds, from 1 to 99999.

- To turn output # N off for a specific number of seconds, use code

  `9 5 N 3 XXXXX ENTER`

  where XXXXX is the desired number of seconds, from 1 to 99999.

- To establish a default pulse time duration in seconds for a given output N (2 digits), use code

  `9 5 N 9 XXXXX ENTER`

  where XXXXX is 1 to 99999 seconds.

- Alternatively, to establish a default pulse time duration in minutes, for individual output N (2 digits), use code

  `9 5 N 8 XXXX ENTER`

  where XXXX is 1 to 1666 minutes.

  Then you may use code 9 5 N 2 (or 3) without need to enter the digits. The unit will use the pre-stored value for that output's pulse length.

- To hear a report of the on/off status of ALL outputs in one operation, use program code

  `9 5 0 0 ENTER`

- To turn ALL outputs OFF in one operation, use code

  `9 5 0 0 0 ENTER`

- To turn ALL outputs ON in one operation, use code

  `9 5 0 0 1 ENTER`

- To establish a default pulse time duration for ALL outputs in one operation, use code

  `9 5 0 0 8 XXXX (XXXX = 1 to 1666 minutes)`

or

  `9 5 0 0 9 XXXXX (XXXXX = 1 to 99999 seconds)`

Warning:

Because the devices under control would not normally be operational during AC power failures, the Output Relay Enclosure does not include battery backup for the output relays during AC power failures. Upon restoration of AC power, the outputs will return to the state dictated by the Verbatim Autodialer.

When the Verbatim Autodialer itself is first turned on, and at certain other times when a microprocessor reset occurs, all the outputs will be turned ON for a fraction of a second, before assuming the state dictated by the Verbatim Autodialer. In some installations this could cause problems, and in such cases external time delay relays or other measures may be required to prevent unwanted momentary activation of controlled devices.

MM are the minutes (09 for 9 minutes)

SS are the seconds. Entry of SS is optional.

- To clear the time and date back to 00:00:00 on 01/01/89.

  ```
  935 7 ENTER
  ```

D Printer Options

D.1 Local Data Logger (Local Printer) Option

If your unit was not originally equipped with this option, refer to the separate instructions for installing this option. (See Section 2.3 for LDL parrallel). The local printer will automatically print out each activity that occurs: alarms, acknowledgments, programming entries, inquiry calls, etc.. A time and date stamp will be included with each report. The local printer may be either serial or parallel as discussed below.

D.1.1 Serial Printer Interface

- If your printer was obtained through Raco, it will have been properly configured and tested at the factory...
- If it was purchased independently, refer to the printer's instruction manual to configure it for 9600 baud, 8 data bits, 1 stop bit, and no parity.
- Improper configuration settings will result in "garbage" being printed, or possibly no printing at all.
- The printer must have a "serial" input.
- Printers not specified by or purchased through Raco are not guaranteed to be compatible for this application.
- Connect the DB-25 connector end of a Raco SER-01 cable (the specific type required will depend upon the printer type) to the input connector on the back of the printer.
- Route the small "modular" plug end of this same cable through one of the holes at the bottom of the Verbatim Autodialer, and plug it into modular jack J303 located near the left side of the Verbatim Autodialer, on the vertical VCP circuit card.
- Avoid routing this cable alongside power wiring, and route it so that the front panel circuit board does not pinch it when the door is closed.

D.1.2 Parallel Printer Interface

Some newer models of the VSS Series autodialer have a standard Parallel Printer Interface. This interface is accessed via the parallel printer port located on the inside of the unit front panel door. This printer port is already activated. (See Section F.3)

- To activate this port, attach a RACO VPPC-1 Parallel Printer Cable (or equivalent) to the front panel port and to the parallel port on your printer.

Caution:

Attach the parallel printer cable to the VSS front panel port with the "red striped edge" on the right side. If you connect any other way, you may damage the parallel connection on your printer.

D.1.3 Time and Date Setting

Time and date may be set or corrected with the following programming code entries:

- To check the date

  `941 ENTER`

- To set the date

  `941 MM DD YY D ENTER`

  where:

  MM is the month (03 for March)
  DD is the date (07 for the 7th day of the month)
  YY is the year (89 for 1989)
  D is the day of the week (1 for Sunday, 2 for Monday, etc.). Entry of D is optional.

- To check the time

  `942 ENTER`

- To set the time

  `942 HH MM SS ENTER`

  where:

  HH are the hours in military time (13 for 1 PM)
  MM are the minutes (09 for 9 minutes)
  SS are the seconds. Entry of SS is optional.

- To clear the time and date back to 00:00:00 on 01/01/89.

  `935 7 ENTER`

D.1.4 Printout at Regular Intervals

The unit may also be programmed to automatically log (printout) all input conditions at regular intervals, by entering code:

```
943 XXX.X ENTER
```

XXX.X is the desired printing interval in hours, from 0.1 to 999.9.

The first such printout will occur when the period elapses, rather than immediately upon programming.

- To check programmed printing interval

  ```
  943 ENTER
  ```

- To turn off regular interval printing function

  ```
  943 0 ENTER
  ```

- To printout All User-Entered Programming

  ```
  944 ENTER
  ```

E Data Acquisition/Central Data Logging

The following section describes commands used to configure features of the Data Acquisition/Central Data Logging options. The software is called SCADA.

E.1 Return To Normal (RTN) Calling

You may program the unit to place calls upon an input returning to its normal state. This applies only to channels which have become acknowledged alarms. Return to Normal (RTN) calls may be placed to people, to a SCADA Central Station or to a Central Data Logger (CDL) printer.

- There are three modes of calling for RTN calls:
  Mode 0 = Data only
  Mode 1 = Voice only
  Mode 2 = Data and Voice

Return-to-normal (RTN) calls on units NOT configured for SCADA or CDL will always be mode 1, Voice only. RTN calls on SCADA or CDL configured units may be mode 0, mode 1 or mode 2. If mode 1 is set on SCADA/CDL units then data calls to the SCADA Central Computer or CDL printer will be skipped. (See Appendix K for a discussion of the Return-to-Normal modes of operation.)

- To program Return to Normal Calls, press:

  `981 V`

  Where V is one of the following:

  - 0 = OFF - No return-to-normal calls will be made (Default is OFF)
  - 1 = ON - Return-to-normal calls will be made for channels in the ALARM, ACKNOWLEDGED state whose input returns to normal (non-violation).
  - 2 = used to manually reset all return to normal channel status - does not affect the return-to-normal calling ON/OFF state above or the calling modes below.
  - 3 = Sets return-to-normal mode to mode 0 - makes return to normal calls only in data mode to the SCADA Central Computer or to Central Data Logger Printer Entering this parameter does not affect the RTN ON/OFF state.

- 4 = Sets return-to-normal mode to mode 1 - makes return to normal calls only in voice mode (NO data calls to the SCADA Central Computer or Central Data Logger Printer. Entering this parameter does not affect the RTN ON/OFF state.
- 5 = Sets return-to-normal mode to mode 2 - makes both data and voice calls upon return to normal. Entering this parameter does not affect the RTN ON/OFF state.

E.2 Quick Intercall Delay & SCADA Units Connected to Cellular Phones

This section discusses two different but sometimes interrelating topics regarding SCADA configured autodialer/RTU units. One topic is the different ways in which the intercall delay operates in SCADA units. The other is the ability to interface SCADA units over cellular phones.

Units configured for SCADA operation may place and receive calls via cellular telephones instead of standard dial-up telephone lines. If purchased from RACO, the combination of autodialer/RTU, dial-up adaptor and cellular transceiver is called the CELLULARM™ package.

CELLULARM™ autodialers/RTUs may be used in cases where land lines are not available but cellular service is available in a particular area. CELLULARM™ units function nearly identically to land line based dial-up interfaced units.

Exceptions

The *intercall delay* (time between calls) functions somewhat differently on SCADA units than on non-SCADA units. On SCADA units a shortened intercall delay takes effect under certain circumstances. These circumstances are:

1) There is a fixed, non-adjustable intercall delay of 35 seconds between:
   a) multiple attempts at data calls to the SCADA Central Computer.
   b) the last personnel (voice) number and "wrapping around" to the data number again.
2) The is also a special adjustable quick intercall delay taken only between the progression from data calls to the first personnel (voice) call.

The quick intercall delay is set to 35 seconds by default. The usual intercall delay taken between between one personnel number and the next personnel number is 2.0 minutes by default.

The purpose of the quick intercall delay is for more expedient in transitioning from data calls to voice calls. However, in certain cases the quick intercall delay may actually interfere with attempts to call the autodialer/RTU for acknowledgement. This is especially true for cellular interfaced units.

Cellular phone calls often take substantially more time to connect to the called party. Therefore, on cellular interfaced units you may need to lengthen the quick intercall delay to allow a longer time "window" for acknowledgement calls from the SCADA Central Computer.

- To set the quick intercall time, press:

  `919 V`

  Where V is 35 to 999 secs.
  Default is 60 secs.

Note:

Available ONLY on units with firmware revision between V1.36 to V1.99. Applies only when the autodialer/RTU is advancing to the first voice number. Does NOT apply to data call retries, calls between successive voice numbers or wrap-around from last voice number to data calls again.

E.3 Acknowledgment Calls To The SCADA Central Station

Units configured for SCADA operation may be programmed to make calls to the SCADA Central Computer to report alarms which were acknowledged by personnel. Alarm Acknowledgement which occurs during calls to personnel or when personnel call the unit will prompt a sequence of Acknowledgement calls made to the SCADA Central Computer. The purpose of Acknowledement calls is simply to log the event of alarms being acknowledged by personnel.

- To program the unit for Acknowledgement Calls, press:

  `982 V`

  Where V is one of the following:

  - 0= OFF - (Default)
  - 1= ON - Make Acknowledgment calls
  - 2= resets all alarm acknowledgement call status - inhibits all further attempts for this alarm acknowledgement occurence.

E.4 Modem Automatic Speed Select for SCADA units

Automatic speed selection of 1200 baud or 300 baud may be programmed ON or OFF. When programmed ON, the unit will attempt to make data calls at 1200 baud first. If 1200 baud cannot be automatically negotiated with the SCADA Central Computer's modem, fallback to 300 baud will occur. When programmed OFF, the modem speed will be determined by the 984 command (below).

Exception

In some cases, 1200 baud may not provide reliable data communications due to phone line noise, etc. If necessary, use this command to force the unit's modem to use one specific speed only.

- To program the Automatic Speed Selection, press:

  `983 N`

  Where N is 1 (ON) or 0 (OFF)
  Default is 1

Note:

This command is not applicable to Central Data Logger units.

E.5 Modem High Speed or Low Speed Selection

When the unit is programmed with Automatic Speed Select OFF use this command to fix the modem speed at either 1200 or 300 baud.

- To program the (non-Automatically selected) Modem Speed, press:

  `984 N`

  Where N is 1 (1200) or 0 (300)

Note:

When Automatic Speed Select is set to ON (command 983) this command has no effect on modem speed.

E.6 Number of Data Call Attempts Before Tripping a Communications Alarm

The autodialer can make multiple attempts to communicate in data mode to the SCADA Central Computer or to the Central Data Logger (CDL) printer. When all attempts to establish data communications have failed a Communications Failure Alarm will be tripped. If the unit is able to make voice calls (i.e. more than just the 1st phone number programmed) the Communications Alarm will be announced to personnel along with the usual alarm and status report messages. When a calling sequence is ended, for example by alarms getting acknowledged, the Communications Alarm is cleared.

If the Communications Alarm persists and successful data communications to the SCADA Computer or CDL printer is eventually established a Communications Alarm message will be logged and/or printed. After a Communications Alarm is logged and/or printed it will be cleared.

- To set the number of attempts before tripping a Communications Failure Alarm, press:

  `985 N`

  Where N is 1 to 10
  Default is 3

Note:

If Automatic Speed Select is set ON the unit will actually make twice the programmed number of attempts before tripping a Communications Alarm; N attempts at 1200 baud and N attempts at 300 baud.

E.7 Answer Mode - VOICE ONLY or DATA-TO-VOICE

Most calls made to an autodialer/RTU will be polling calls from the SCADA Central Computer. By default the autodialer/RTU will be expecting a data call and answer with a modem answer tone. This is called DATA-to-VOICE answer mode. Personnel wishing to call an autodialer/RTU to get voice reports can just wait through the modem answer tone for a few seconds for the unit to fall back to voice mode and begin speaking.

The autodialer/RTU may also be programmed for VOICE ONLY answer mode. In VOICE ONLY mode the unit will never answer with a modem answer tone and voice annunciation will begin immediately upon answering.

Programming an autodialer/RTU for VOICE ONLY defeats polling calls from the SCADA Central Computer since the unit will only answer by voice and not assert a modem answer tone. However, VOICE ONLY answer mode does not affect data calls made FROM the RTU to the SCADA Central Computer or CDL Printer.

If your SCADA Central Computer is not operational you may wish to program the answer mode to VOICE ONLY. Customers who purchase the SCADA option for their autodialer/RTUs in advance of installing their SCADA Central Computer should use this programming command to make the unit function as a non-SCADA networked autodialer. In addition to programming the answer mode to VOICE ONLY make sure there is no 1st phone number programmed. (The 1st phone number does data only calls to the SCADA Computer.)

- To program the Answer Mode, press:

  `986 N`

  Where N is 0 (default) for DATA-to-VOICE or 1 for VOICE ONLY

Note:

Does not apply to Central Data Logger (CDL) units. CDL units never receive polling calls and always answer in VOICE ONLY mode. The 1st phone number must be programmed to call the CDL printer.

E.8 DATA/VOICE Autocall Calls for SCADA & Central Data Logger

Autocall calls may function substantially the same in SCADA and Central Data Logger (CDL) units as in standard, non-SCADA units. However, different operating modes of Autocall may be programmed in addition to the usual Autocall functionality.

Exceptions:

- Autocall calls may be restricted to only calling the SCADA Central Computer or CDL printer. Also, Autocall calls may be restricted to calling just the personnel numbers programmed into the unit (i.e. no calls to SCADA Computer of CDL printer). And finally, Autocalls may call both personnel numbers and SCADA Computer or CDL printer numbers.
- Autocall calls made to the SCADA Central Computer or CDL printer result in logging and printing of the Autocall session. No acknowledgement is required or is possible.
- Autocalls calls made to personnel numbers will be standard voice annunciation sessions.

- To program the DATA/VOICE Autocall mode, press:

  `987 N`

  Where N is 0 to 2

  - 0 = (default) Autocall Calls made to SCADA Central Station only
  - 1 = Autocall Calls made to personnel numbers only
  - 2 = autocall Calls made to all numbers

F MODBUS Interface

This section covers the PLC specific functions of the Verbatim autodialer. It is assumed the reader is already familiar with the basic operation of the Verbatim autodialer. If this is not the case, please take the time now to review the previous sections of this manual.

In the discussion that follows, there are many technical terms specific to PLC operation which may be unfamiliar to those not experienced with PLCs. Please refer to the Glossary section for definition of these terms.

F.1 Overview

The Verbatim autodialer allows direct connection to Programmable Logic Controllers (PLCs) via a serial interface or other network connection. No direct connections from PLC output points to the Verbatim input points are required in order to monitor or annunciate for the PLC. Also, in most cases, no changes in the PLC's ladder logic program are required.

In addition, the autodialer allows connection to any non-PLC equipment compatible with supported PLC network protocols. An example of this application is a SCADA or DCS system running software configured with a PLC network protocol driver module. The autodialer does not care if the devices are a real PLC network or a computer mimicking a PLC network. However, master/slave protocols will require the autodialer to assume the role of master.

The Verbatim autodialer may read or write any data register within the PLC network. The data registers accessed by the autodialer may be in a single PLC or may be arbitrarily spread over a number of PLCs on the network.

Obviously, the number of data table locations in even a single PLC may number into the thousands. To relieve the user of having to deal with a huge number of precisely notated data table addresses, the autodialer uses the artifice of Remote Channels (RCs). Simply stated, RCs are nothing more than a kind of speed-dial number like you might set up on your telephone. Once the full number sequence has been entered into memory, a shorter sequence of numbers may be used as an abbreviation for the long sequence stored in memory.

Through the Verbatim autodialer, the user associates the address of a PLC data register to a RC. Thereafter, the RC becomes a shorthand designation for that data register's address. Any register, whether digital, analog, or other miscellaneous type, may be associated with an RC.

Data registers may actually be spread over a network of PLCs. The autodialer does not care if RC #2 is associated with a data register in a different PLC from the data register associated with RC #1. Therefore, when programming the autodialer to associate a PLC data register with a RC, the node number of the PLC may be included in the description for the location of the data register.

Additionally, the amount of User Recorded Speech Memory is increased appropriately for each Remote Channel configuration. These different quantities of memory yield total message recording times consistent with each of the available RC configuration options.

F.2 General Operation

This section describes configuring the Verbatim autodialer to continuously monitor any data register on the PLC network. Additionally, under user command, the autodialer may read and write to any PLC data register. The autodialer will only perform these functions after it has been properly installed, connected to the PLC network, and programmed.

F.2.1 Associating a Remote Channel with a PLC Data Register

In order for the Verbatim autodialer to read, write or continuously monitor a PLC data register the address of the data register must be associated with a Remote Channel (RC). After a data register address has been associated with a RC the Verbatim autodialer then knows where to direct queries for the contents of a data register on the PLC network.

The data register's complete address description is called the ***net address***. See section F.4.2 for information about net address formats.

Once a data register's net address has been associated with a RC, the alarm criteria may then be programmed. Only after an alarm criteria is entered will the PLC data register be scanned continuously by the Verbatim autodialer. When the content of the data register changes to match the alarm criteria, the RC associated with the data register goes into the alarm state.

RCs in the alarm state behave in exactly the same way as Verbatim autodialer internal or "physical" channels.

The Verbatim autodialer may be called at any time to receive an annunciation of the status of channels monitored. PLC registers associated to RCs may be read and written over-the-phone. Additionally, programming activities may be performed via the buttons on the user's phone.

When an operator calls the autodialer, the status of RCs will be reported and the user may reprogram parameters of RCs over-the-phone. When accessing the autodialer over-the-phone, all user functions that could result in the alteration of ANY data register can be made subject to correct entry of an access code.

Alarm criteria, trip delays and alarm call groupings are established in a fashion similar to normal physical channels. RCs associated with PLC discrete data registers support the normally open or closed criteria. RCs associated with PLC analog or integer data registers support high and low set points.

Associating a net address to a RC implicitly establishes the channel as digital or analog. For RCs, the default alarm criteria for both digital and analog channels is 'disarmed'. Attempts to set analog criteria on digital channels, and vice versa will cause an error announcement. If the net address for an RC already configured is re-programmed so that the type (analog or discrete) of data changes, the criteria will automatically be set to 'no alarm'. There is no run-time or totalizer capability for any of the RCs.

At the front panel, the LED channel status display shows all Remote and Physical Channels. Since the count of total Physical and Remote channels is greater than the usual 32 status LEDs, channels are combined into groups so that the status of all channels may be observed.

F.3 Connecting to the PLC Network

In most cases, the cable supplied by RACO will already be connected at the Verbatim autodialer end to a modular jack inside the unit. If this is not the case, please refer to the drawings in appendix H.

Note:

Refer to the cable drawings in the appendices to identify your type of PLC network connection.

Electrical Connection Diagram for PLC Network Connection

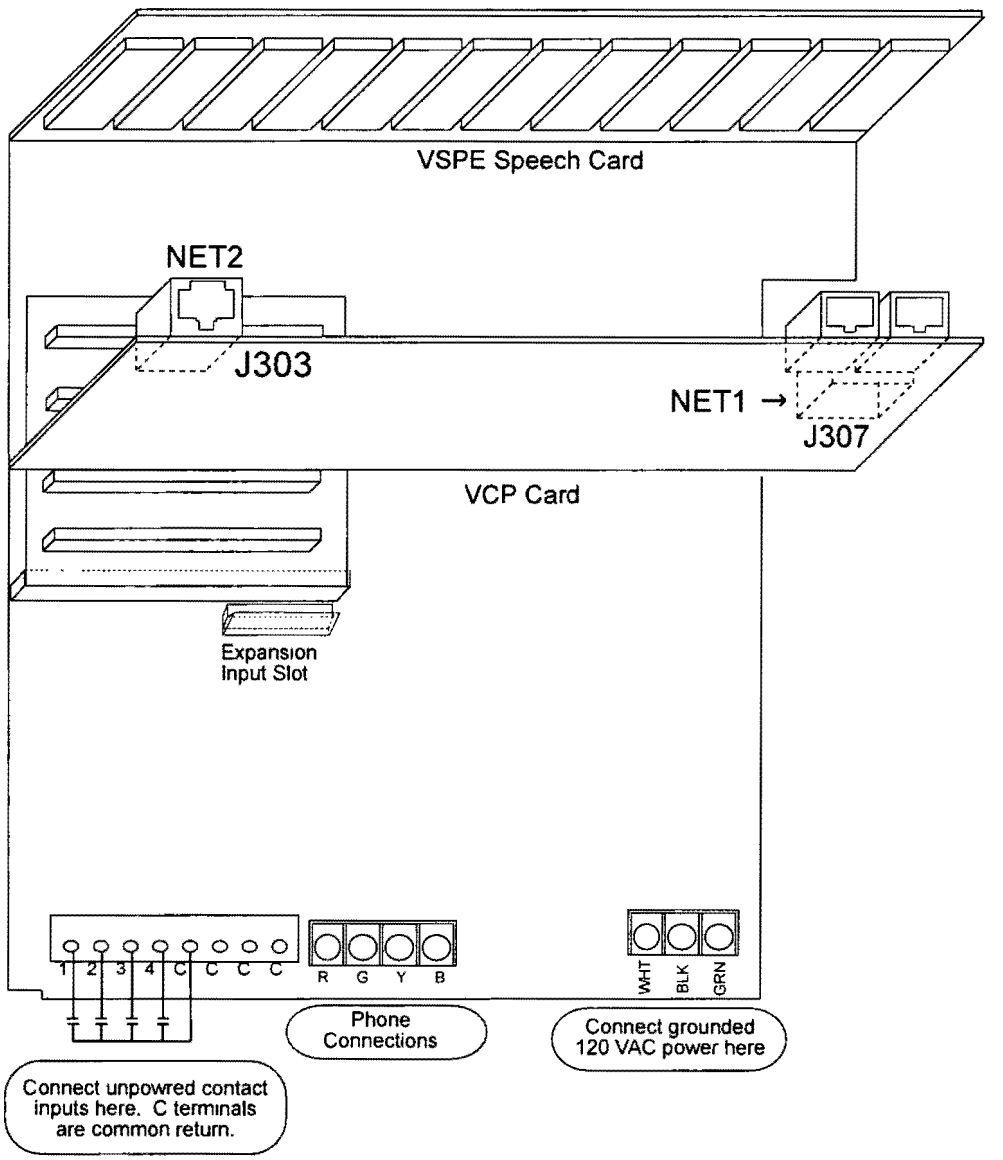

Cable connections for various PLC network protocols	
NET1	NET2
Modbus	NONE
Modbus	Serial LDL

F.3.1 Before Calling Technical Service Assistance

Programmable Logic Controllers have been used for several decades for process control applications. There is a large body of knowledge germane to using PLCs. RACO assumes that the user needing to monitor a PLC network with the Verbatim autodialer is already familiar with the PLCs being used for the application. It may also be assumed that the user has access to a PLC expert to help accurately identify the addresses of a PLC data register.

Before consulting the RACO Customer Service Department or your local RACO Representative for assistance in installation and configuration, please insure that the PLC details described in the next paragraph are readily available.

The user must have access to the PLC ladder logic program listing and know the location and properties of all data table locations which will be monitored by the Verbatim autodialer. Also the user must be able to determine the basic operating parameters of the PLC communications channel. This means being able to configure the PLC's parameters such as the node address, baud rate, data bits, parity and stop bits. Setting these parameters at the PLC may require the use of a PLC Hand Held Terminal, or a Personal Computer running PLC programming software available from the PLC's manufacturer.

The MODBUS communications protocol is a Verbatim autodialer firmware option and must have been properly configured at the factory. Parameters concerning link, frame and packet-level interfaces are configurable in the field.

F.4 Programming for Remote Channels

F.4.1 Remote Channel Programming Overview

The Remote Channels (RCs) behave fundamentally the same as their physical channel (PC) counterparts. Procedures for programming and recording messages for remote channels are very similar to the procedures described in the previous sections of this manual. There are some differences, however. These differences will be discussed in this section.

In general, all Verbatim autodialer commands that operate on remote channels will begin with the digit '4'. Commands that perform functions similar to non-Remote Channel specific commands use the same key sequence, preceded by the digit '4'.

- For example: to interrogate the alarm status for Physical Channel number 1 1, enter the command:

  `0 1 1 then <ENTER>`

- To interrogate the alarm status for Remote Channel number 1 1 enter the command:

  4 0 1 1 <ENTER>

The existing commands that apply globally to all channels will apply uniformly to the RCs as well. Specifically, these codes are: 900, 902, 904, 917N, 923N, 927N, 930, 935N, 966N, 9403, 9404. The 'CHECK STATUS' function, either from the front panel or over-the-phone, reports channel status for all channels both physical or remote.

The sub-sections that follow itemize all programming key sequences available to the user. A short description of each function is provided, together with longer notes when necessary. If a programming key sequence is not recognized by the Verbatim autodialer, or any parameter is invalid, the Verbatim autodialer simply says "Enter program code".

All commands that use a full network address may omit the network ID and/or the node address, in which case the default values (codes 4910, 4911) will be used. The user should then also omit the '*' delimiter associated with the omitted component. If the user does omit a field then all preceding fields must also be omitted. (See Section F.4.2 for more information on net address formats.)

The RCs on any specific network may be globally inactivated without erasing any of their configuration. An individual RC may be inactivated without erasing the network address by setting the no alarm or disarmed criterion. In this case, it will be necessary to reprogram the criterion in order to re-activate the channel.

F.4.2 Associating a Net Address with a Remote Channel

Note:

Remember that * = POINT when referenced in this manual.

The most important operation in configuring your Verbatim autodialer is associating a data register's net address to a RC. The net address is actually part of the complete command sequence entered by the user when programming the association of a RC and a data register. Consider the following example. Suppose the Verbatim's NET 1 is configured for the Modbus protocol and node 2 on that net is a PLC. To associate RC #01 with the16 bit data register whose address is 40001 you would enter the following command sequence:

4 5 0 1 * 1 * 2 * 40001 * then ENTER.

The first 4 digits from the above example are the programming command for RC association or RC alarm criteria. Thus, the sequence 4 5 0 1 refers to programming for RC #01. The net address portion of this command sequence is the remaining digits plus the '*' used for delimiting. The 16 bit data register has the address of 40001. The PLC's node number is 2 and the Verbatim's NET is 1.

The general net address syntax has the following form:

```
* NET * node * address *
```

where:

NET is NET Number - 0, 1, or 2

Net 0 is Physical Channels

Net 1 is Modbus

Net 2 is serial printer

node is PLC's Node Number

Modbus - 1 to 256

address is Data Register Address - may be numbers. Syntax for the register address is very specific to the PLC brand.

In the previous example, certain simplifications were made. Simplifications in the net address may be made by using programmed defaults. The usual default for the Verbatim's NET number is 1. The default node number may be set to any value allowed by protocol. Therefore, in the previous example, the entry may be simplified further to the following:

```
4 5 0 1 * 40001 * <ENTER>
```

F.5 General MODBUS Requirements

This appendix provides information specific to Modicon's Modbus network. There are sections on PLC data table addressing, net address format, and global data. The paragraphs here describe general requirements and hints.

Modicon PLCs: Be sure that the DEF/MEM switch on compact 984 PLCs is set to 'MEM'. Otherwise, it will be impossible to change network communications parameters from the defaults.

Modbus Networks: All nodes on a Modbus network must use RTU protocol. There can be only one master on the network. The master must be the Verbatim Autodialer.

Use the link-level timer (command 4908) to insert a delay between query/response cycles. This will only be necessary if talking to a slow device.

F.6 PLC Address Format

The table below shows how to address specific objects in Modicon PLCs. 'x' represents a digit in the range 0-9. The Verbatim autodialer User Interface will accept any values for 'xxxx'. If a value is out of range for a particular PLC, that PLC will issue an error diagnostic, which will be passed on to the user. This is to say, the remote PLCs enforce the validity of PLC addresses on their own.

Notes:

- Extended memory access is not currently implemented.
- Inputs may be written by the Verbatim autodialer, but will most likely be overwritten immediately by the PLC when it does its next scan of the ladder logic.
- The PLC memory protect switch will prevent a coil or register from being written.

Addressing Modicon PLC Objects

Address	*Description*
0xxxx	Coil (1-bit Output) number xxxx
1xxxx	Input point (1-bit) number xxxx
3xxxx	Input register (16-bit) number xxxx
4xxxx	Output (holding) register (16-bit) number xxxx

F.7 Potential Effects of Network Communications Failures

Physical channels only go into alarm state when their input matches programmed alarm criteria. Remote channels also support these criteria-based alarms.

It must be remembered however, that the channel data compared against the criteria must first be received from the network being monitored. Since the remote channel's data is being transferred over a network, alarming may be affected by various network failures.

If such a failure occurs, and the data cannot be received, it is no longer possible to reliably compare the channel against the alarm criteria. As a result, the remote channels will enter the alarm state even though their channel data may not have changed. The term "COMALARM" is used to distinguish this sort of alarm scenario from the criteria based alarms.

More precisely, an RC will register a COMALARM whenever the following two conditions are met:

1. The RC is configured with alarmable criteria.
2. All attempts to poll the RC have failed for the COMALARM trip delay period (code 4907).

For status reports, alarm calls, LED indicators and acknowledgments, the COMALARMs are treated in the same way as criteria alarms. They are annunciated in the following manner:

1. The COMALARM message will override any criteria alarm message.
2. The COMALARM message is not user recordable. It always consists of "Remote Channel Number ZZ Communication Failure Code XXX."

The failure code annunciated by the Verbatim autodialer serves as an aid in troubleshooting the network problem causing the failure. They are listed in section F.17.

To further assist in network troubleshooting several diagnostic commands are provided. It is possible to:

1. Perform a complete network self-test.
2. Read the communications status for any RC.
3. Read and reset the COMALARM count for any RC.
4. Read a list of the last 10 COMALARM codes on the network.
5. List all RCs currently in the COMALARM state.
6. List the nodes (PLCs) on the net that have all of their RCs in the COMALARM state.

The Verbatim autodialer provides several other features to help the user with the inevitable complexities of a networked environment. One is the ability to suspend/resume all queries initiated by the Verbatim autodialer without altering any RC programming. The status reports will inform the user when a network is globally disabled in this fashion.

Another diagnostic tool is the front panel Network Status Indicator LED for each network. Each LED is like a channel which monitors the overall health of each network. This is accomplished by accumulating all the COMALARM codes into a single value. The value is compared against a threshold. See code 492 in Section F.16 for details.

If the threshold is exceeded, then the LED will blink and status reports will annunciate the current value of the network status code. If the network has been globally disabled the LED is off. Otherwise the LED is steadily ON, indicating the network is operating within programmed parameters. See Section F.17.

The Verbatim autodialer keeps a count of the threshold violations. Programming commands are available to announce and reset these counts. It is also possible to announce the current value of the status code and set the threshold to any severity level. See section F.16 for details.

F.7.1 Abbreviations and Typographic Conventions

In the following sub-sections, the verbal response expected from the Verbatim autodialer will be given following the program code that the user is to enter for each programmable function. This verbal response will be differentiated by being in italics in the following way: *Remote Channel Number TEN, Alarm, Acknowledged.* The following table describes the abbreviations used in the code listings and elsewhere in this document:

Code Listing Abbreviations

Code	*Description*
ZZ	Any two-digit remote channel number, from 01 to 96, depending on the hardware configuration.
yy	Same as above
N	An integer from 0 to 65535, or as specifically noted.
net	The network ID: 1 to 5
node	The node address, as appropriate for a given network.
addr	The PLC address, as appropriate for the given PLC. (Details on specific PLCs and protocols are found in the appendices.)
DN	A two-digit code indicating a specific phone number.
V	An arbitrary floating point number of the form: 1.23. If 3 or more digits to the right of the decimal point, V is truncated to the nearest .005.
*	Same as 'point' key
#	Same as 'minus' key

F.8 Remote Channel Status, Reading, and Writing

4 0 ZZ

Function — Read alarm status of Remote Channel ZZ. (See code 49402 for Network Alarm Status)

Response — *remote channel <ZZ> <alarm status>*

If ZZ=00 in the following two commands, then the command applies to the net address specified by the most recent 4500 command. In that case, the "remote channel ZZ" responses are replaced with the explicit net address.*

*4 0 ZZ **

Function — directly read PLC address associated with Channel ZZ

Response *remote channel <ZZ> is <N>* or
remote channel <ZZ> communications error <code>

*4 0 ZZ * N*

Function write value N to PLC address associated with channel ZZ
Response *remote channel <ZZ> set to <N>* or
remote channel <ZZ>communications error <code>

Notes:

- This command will execute without any "are you sure?" checking. Users must make sure the address and value being written will not create an unsafe condition.
- Writing a value greater than 1 to a digital or net address will result in the value 1 being written.

F.9 Remote Channel Message Recording and Reviewing

4 1 00 net

Function Record network ID message for specified net. Append a '*' to the command to return to default network ID message.
Response whatever was recorded or the default message: *NET <net>*

Notes:

- For the following 2 commands, N is optional. If present, it must be in range 1-4 and sets the recording rate for that particular message. User Messages for the remote channels are used in the same way as user messages for the physical channels.
- For analog channels, the alarm message is always the default: "<high> <low> set-point exceeded". The user messages form a preamble and epilogue for the data value recitation during alarm messages. The default epilogue for remote channels is null.

4 1 ZZ N

Function Record channel ZZ alarm/preamble message. *N*, if present, specifies the recording rate to use. If *N* is not present, the default recording rate is used. Append command with a '*' or '0' to return to default alarm message
Response whatever was recorded or the default message: *remote channel <ZZ> alarm*

4 2 ZZ N

Function Record channel ZZ normal/epilogue message. *N*, if present, specifies the recording rate to use. If *N* is not present, the default recording rate is used. Append command with a '*' or '0' to return to default normal message.

	Response	whatever was recorded. The default message for discrete channels is: *remote channel <ZZ> normal* . The default message for analog channels is silence (no epilogue).
4 3 ZZ		
	Function	Review both messages for channel ZZ. If ZZ is 00 then all network ID messages are reviewed.
	Response	whatever was recorded or the default messages.

F.10 Remote Channel Configuration

Commands in the series "4 5 ZZ," are used for Remote Channels as follows:

- Associate a PLC net address to a Verbatim Remote Channel. This step tells the Verbatim autodialer where on the PLC network to look for the point to be monitored.
- Establish the alarm criteria for a Remote Channel. This step tells the Verbatim autodialer what constitutes an alarm condition in the monitored PLC point.
- Link a Remote Channel to a phone number or group of phone numbers. When an alarm occurs in the monitored PLC point only the phone numbers linked to the Remote Channel will be called. (By default, all phone numbers will be called.)

Note that you must first assign a net address to a Remote Channel before any alarm criteria may be configured.

F.10.1 Assigning PLC Net Addresses to Remote Channels

Command "45ZZ" associates a remote channel with a network address and, as such, is essential for activating an RC. When issued, this command will cause the Verbatim autodialer to immediately access the specified network address. Any communications errors at this point will generate the message: *communication error code <diagnostic>*. Any command in this section will support ZZ=00.

If the data type (analog, discrete) of the new address is incompatible with the existing alarm criteria, then the NOALARM criteria will replace them. Otherwise, the existing criteria are untouched. The Verbatim will announce this action. Any links to other RCs are always preserved.

Notes:

See section F.4.2 for an overview of net addresses.

*4 5 ZZ **

Function — Read the network address which is currently associated with RC number ZZ.

Response — *remote channel <ZZ> NET <net> NODE <node> ADDRESS <addr>* or *communication error code <diagnostic>*

*4 5 ZZ * net *node *addr **

Function — Associate RC <ZZ> with specified network address. Does not alter any other parameters.

Response — *remote channel <ZZ> NET <net> NODE <node> ADDRESS <addr>* or *communication error code <diagnostic>*

F.10.2 Remote Channel Alarm Criteria

4 5 00

Function — The criteria for all "eligible" RCs are set so that the channel is normal in its current state. An RC is NOT eligible if any of the following conditions apply:

- Channel's net address type is analog or floating point
- Channel has NOALARM criteria already configured
- Channel is already the destination channel in a linked pair

Response — *present input condition is programmed to be normal for all remote channels*

4 5 ZZ

Function — Read alarm criteria for channel ZZ

Response — *remote channel <ZZ> <criteria> or remote channel <ZZ> no net address programmed*

4 5 ZZ 0

Function — Disarms <ZZ> (i.e. eliminates all status reporting for the channel). All other configuration information is preserved.

Response — *remote channel <ZZ> disarmed*

4 5 ZZ 1

Function — Set channel number ZZ alarm criteria to normally 1.

Response — *remote channel <ZZ> normally 1*

4 5 ZZ 2

Function — Set channel number ZZ alarm criteria to normally 0.

Response — *remote channel <ZZ> normally 0*

4 5 ZZ 3

Function — Set channel number ZZ alarm criteria to no alarm. The channel is still listed in all status reports.

Response — *no alarm condition for remote channel <ZZ>*

4 5 ZZ 4

Function — Set channel number ZZ to NETERR mode — alarm if and only if a communications alarm occurs.

Response — *remote channel <ZZ> alarm on communication failurec.*

4 5 ZZ 5 N

Function — Set channel number ZZ analog low alarm set point to N. Use N = -0 to clear. Omit N to read current set point value.

Response — *remote channel <ZZ> low set point is <N>*

4 5 ZZ 6 N

Function — Set channel number ZZ analog high alarm set point to N. Use N = -0 to clear. Omit N to read current set point value.

Response — *remote channel <ZZ> high set point is <N>*

F.10.3 Linking Remote Channels to Phone Numbers

4 5 ZZ 9

Function — Read RC number ZZ alarm call grouping linkage.

Response — *remote channel <ZZ> calls <list>*

4 5 ZZ 9 DN

Function — Link RC number ZZ to phone number list DN

Response — *remote channel <ZZ> calls <list>*

*4 5 ZZ 9 **

Function — Clear all RC number ZZ phone number linkages

Response — *remote channel <ZZ> calls all phone numbers*

Note:

Linking Remote Channels to phone numbers is different than linking one Remote Channel to another Remote Channel. The latter is discussed in section F.12.

F.11 Alarm Trip Delays

The alarm trip delay commands here apply only to criteria violations. See code 4907 for the COMALARM trip delay. See codes 4921 and 4922 for network alarming.

4 6 ZZ

Function — Reads channel number ZZ alarm trip delay.

Response — *remote channel <ZZ> alarm trip delay is <v> seconds*

*4 6 ZZ **

Function — Sets channel number ZZ alarm trip delay to 2.0 seconds.

Response — *remote channel <ZZ> alarm trip delay is 2.0 seconds*

4 6 ZZ V

Function — Sets RCZZ individual alarm trip delay to V.

Response — *remote channel <ZZ> alarm trip delay is <V> seconds*

F.12 RC Linking/Network Bridging

The commands detailed in this section allow data to be passed between any two remote channels. Applications include passing data between nodes on compatible and incompatible networks, updating status registers in DCS systems, or exporting the Verbatim physical I/O to remote nodes. One channel acts as a data "source" and the second as a data "destination". Data is read from the source channel's net address and then written to the destination channel's net address once per scan loop. The destination and source are said to be "linked".

F.12.1 Linking Modes

The linking functions can work in one of two modes. In Data Link mode, the data read from the source is written directly to the destination. In the absence of communication problems, each destination channel is updated with a frequency equal to the Verbatim scan time. If there is a communications problem reading data from the source, then nothing is written to the destination.

In Alarm Link mode, the source channel data is first interpreted against the configured alarm criteria. If any alarm condition exists at the SRC channel, then a 1 is written to the DST. Otherwise, 0 is written. Any communications problem reading from the source will be reflected.

For both modes, the reads and writes are attempted once per scan loop. Any required protocol conversions are handled automatically. Any problems getting data for or writing data to the destination will appear as communications errors on the source or destination RCs. The data read or written is subject to RC initialization and the worst-case scan loop latencies. See Section F.7 for details.

F.12.2 Commands & Limitations

The commands below establish the channel linkage configurations. There are several rules and restrictions as follows:

1. Both the source and destination RCs must already be configured with net addresses. If this is not the case, then an error message is given. The net address for either channel in a linked pair may be reconfigured at any time, without altering the link.
2. If the RC specified as source is already configured as destination for any other linked pair, then an error message is given. Similarly, if the RC specified as destination is already configured as source for any other linked pair, an error message is given. This prevents "chaining" of linked pairs.

3. If the RC specified as destination is already configured as the destination for another source, then the new configuration supersedes the old one. No error message is given. This prevents the configuration of multiple sources for a single destination. The user must take care that distinct destination channels do not have identical net addresses. Multiple destinations for a single source are allowed.
4. If either the source or destination RC are "DISARMED", then its criteria will be reset to "NETERR". This alteration will be announced. All other existing criteria are accepted without alteration. Once a link is configured, any attempt to DISARM either the source or destination results in an error message. All other criteria modifications are allowed. Note however that it rarely makes sense to have destination criteria of anything other than "NETERR" or "NOALARM".
5. The linking of channels with different data types is allowed. For example, it is OK to have a discrete source linked to an analog destination. Special data conversion rules apply and are presented in the table below.

Conversion Rules

Source	*Dest.*	*Destination Value*
16 or 32 bit	1 bit	0 if source is 0, otherwise 1
1 bit	16 bit	0 if source is 0, otherwise 1
1 bit	32 bit	0.0 if source is 0, otherwise 1.0
16 bit	32 bit	floating point number with integer value equal to the source value
32 bit	16 bit	garbage: least significant 16 bits of the source value, however encoded

6. If the destination channel is read-only (i.e. a PLC input register) then a COMALARM will result.

*4 7 ZZ * YY*

Function — Establishes an alarm mode link with RC ZZ as the source channel and YY as the destination channel. Channel ZZ's alarm status will be written to YY's net address once per scan loop. A 1 is written if any alarm exists, otherwise zero.

Response — *remote channel ZZ alarm link to remote channel YY* or, *remote channel (ZZ,YY) not programmed*, if no net address, or, *remote channel (ZZ,YY) already linked*, if multiple sources, or link chain would result.

*4 7 ZZ * YY **

Function — Establishes a data mode link with RC ZZ as the source channel and YY as the destination. The value from ZZ's net address is written to YY's net address once per scan loop.

Response *remote channel ZZ data link to remote channel YY* or, *remote channel (ZZ,YY) not programmed*, if no net address, or, *remote channel (ZZ,YY) already linked*, if a link chain would result.

The commands listed below report or clear existing link configurations. When a link is cleared, the net address and criteria for both channels are untouched. Operation of the source channel is unchanged. In fact, the only change is that the destination channel will no longer write any data to the remote address. Rather, it begins to read the remote address and will alarm according to the existing criteria, just like the source or any other remote channel.

4 7 ZZ

Function Reports all linked channel pairs using ZZ as either source or destination channel. If ZZ is 00, then the set of all linked channel pairs is listed.

Response *remote channel <ZZ,XX> <data,alarm> link to remote channel <YY,ZZ>*

4 7 ZZ-0

Function Clears all linked channel pairs using ZZ as either source or destination channel. If ZZ is 00, then the set of all linked channel pairs is cleared.

Response *remote channel ZZ link to remote channel YY is cleared* or, *remote channel ZZ is not linked*, if no such link existed, or, *all remote channel links cleared*, if ZZ is 00.

*4 7 ZZ * YY-0*

Function Clear specific link using ZZ as source and YY as destination.

Response *remote channel ZZ <data,alarm> link to remote channel YY is cleared.* or, *no link*, if such a link does not exist.

F.13 Communications Parameters

All commands in this section allow the 'net' parameter to be omitted, in which case the default network is used. If either 'net' or the default net (see code 4910) is 0, the command has no effect. If the '*' is omitted, then the current setting is spoken. If '*' is present and 'N' omitted, then the parameter is set to it's default. If 'N' is present, then '*' must precede it.

If the protocol currently configured on any specific net forbids alteration of a parameter, then the command is ignored and the "Enter program code" message is announced. The defaults for each parameter are also network dependent.

4 9 00 net

Function Announces the current setting of all applicable parameters.

Response See all codes below

*4 9 00 net **

Function Resets all applicable parameters to their factory default.
Response See all codes below

F.13.1 Serial Port Parameters

*4 9 01 net * N*

Function Read/set baud rate for net to N. If present, N must be: 50, 75, 110, 150, 300, 600, 1200, 1800, 2000, 2400, 3600, 4800, 7200, 9600, 14400, 19200, 28800, 57600. Any other values are ignored.
Response *<net ID message> baud rate is <N> .*

*4 9 02 net * N*

Function Read/set data bits for net to N. If present, N must be one of: 5, 6, 7, or 8. Any other values will be ignored.
Response *<net ID message> data bits are <N>*

*4 9 03 net * N*

Function Read/set stop bits for net to N. N must be 1 or 2. Any other values will be ignored.
Response *<net ID message> stop bit is <N>*

*4 9 04 net * N*

Function Read/set parity for net. If present, N=0 is NO parity, N=1 sets ODD parity and N=2 sets EVEN parity for net, N=3 for SPACE parity, N=4 for MARK parity. Any other values will be ignored.
Response *<net ID message> parity is <even, odd, space, mark>*

F.13.2 Network Parameters

*4 9 05 net * N*

Function Read/set local node address for net to N. The allowable range for N is protocol dependent. Illegal values are ignored.
Response *<net ID message> node number is <N>*

4 9 06 net

Function Read protocol for network.
Response *<net ID> protocol is <current protocol>*

F.13.3 Timing Parameters

*4 9 07 net * V*

Function Reads/sets communications alarm trip delay. Communications errors for all RCs on net must persist continuously for V seconds before a COMALARM violation is registered.
Response *<net ID> communication alarm trip delay is <V> seconds*

*4 9 08 net * N*

Function — Reads/sets link-level timer. Units are milliseconds. Usage of this timer is protocol dependent and described in the appendices. In general, this parameter is the maximum time the Verbatim will wait for the response from a communications co-processor or interface module.

Response — *<net ID> link limit time is <N> mseconds*

*4 9 09 net * N*

Function — Reads/sets application-level timer. Units are milliseconds. This value is the maximum amount of time the Verbatim will wait for another node to respond to any command.

Response — *<net ID> message limit time is <N> mseconds*

F.14 Miscellaneous

*4 9 **

Function — Repeats the previous command which began with a '4'. It is possible to add key strokes after the * and before enter, subject to limit of 65 total keystrokes. The added key strokes are not concatenated for subsequent 49* commands.

Response — appropriate to actual command resulting

In the following, N may be omitted, in which case the current value is only announced, not altered. The values apply to all commands expecting a net or node value to be specified. They allow fewer keystrokes to be used when programming net addresses and other commands.

4 9 10 N

Function — Read/set default net number to N. N must be 0-5, consistent with the hardware options.

Response — *Default net address network is N*

4 9 11 N

Function — Read/set default node number to N. Allowable values for N are protocol dependent.

Response — *Default net address node is <N>*

F.15 Clear-Out Operations

*4 9 3 * net*

Function — Globally disables/enables RC polling on the specified network. Acts as a toggle, so two consecutive entries cancel each other out. No RC programming is erased.

Response — *<net ID> communication is (off, on)*

4 9 35 4

Function — Clears all RC user recorded messages.

Response *All remote Channel messages cleared*

4 9 35 5

Function Clears all RC configuration data: network addresses, criteria, links.

Response *All remote channels reset*

4 9 35 8

Function Clears out all communications failure codes and counts.

Response *Communication error count overall reset*

4 9 35 9

Function Does all the 4935 functions. NOTE, ONLY the RC configuration is affected.

Response *Verbatim RC programming requires Firmware Revision*

F.16 Diagnostic Readouts

In the following, N may be omitted, in which case the current value is only announced, not altered.

4 9 2 <net>

Function Reads current value for Network Failure threshold. The LED indicator will blink and a Network Failure Alarm will register when this value is exceeded.

Response *<net ID> network status alert setpoint is <N>*

4 9 2 <net> <<N>>*

Function Sets current value for Network Failure threshold. Use N=200 to disable the network failure indicator.

Range for N 0-200

Default 0

Response *<net ID> network status alert setpoint is <N>*

*4 9 30 * net*

Function Perform a diagnostic self-test on specified network. Depending on protocol and LDL configuration, diagnostic counters may be printed and/or reset.

Response *<net ID> communication test is <normal, errcode>*

4 9 40

Function Read all 4940x diagnostic info for all networks.

Response See error/diagnostic code list in section F.17.

Note:

In the following, 'net' may be omitted, in which case the information for the default network is annunciated.

*4 9 40 * net*

Function Read all 4940 diagnostic info for <net>

Response see commands below

4 9 40 1

Function — Read time to complete RC table scan
Response — *scan time is <time> seconds*

4 9 40 2 net

Function — Read network status code for specified network
Response — *<net ID > network status code is <code>*

4 9 40 3 net

Function — Read network alert count.
Response — *<net ID > network alert count is <count>*

4 9 40 4 net

Function — List all the node addresses whose RCs are currently experiencing communication failure.
Response — *<net ID > communication failure at node(s) <list>*

4 9 40 5 net

Function — List all RCs on net currently having communications failure.
Response — *<net ID > remote channel(s) now in communication alarm are <list>*

Note:

49405 does not report criteria-tripped alarms. The check status command (4 0 ZZ) checks all alarm conditions, communication or otherwise.

4 9 40 6 net

Function — Read diagnostic codes for last 10 network problems. Append -0 to clear the history stack.
Response — *recorded error numbers are code <n>...*

4 9 41 ZZ

Function — Read current communications status for channel number ZZ. Status reported is result of latest scan loop poll, not the communications alarm status (see 40zz)..
Response — *remote channel <ZZ> communication alarm code is <diag code>*

*4 9 41 ZZ **

Function — Read count of communication alarms for RC ZZ (add -0 to clear)
Response — *remote channel <ZZ> communication alarm count is <count>*

4 9 42 net

Function — Read list of disarmed (see code 45ZZ0) RCs
Response — *<net ID> remote channels now disarmed are <list>*

4 9 43

Function — Read list of uninitialized RCs.
Response — *remote channel(s) not programmed are <list>*

Continued on next page . . .

4 9 44

Function — Read list of all RCs not using the default criterion.
Response — *remote channels armed are <list>*

4 9 45 ZZ

Function — Reports net address, criterion, setpoints, links, and alarm status for channel number ZZ.
Response — See commands 45zz*, 45zz, 47zz*, 4941zz

F.17 Status, Diagnostic & Error Code Listing

This section lists all network status, diagnostic and communications error codes likely to be of use for customer troubleshooting. Other codes may be reported in rare instances, and information about their interpretation may be obtained from RACO customer support.

F.17.1 Network Status Codes

The Network Status code reflects the overall health of all devices connected to a specific net. The values for these codes are used both for programming the alert threshold and in reporting the current status. Whenever a specific network's status code exceeds the alert threshold the network status LED will blink and an alert message is included in all reports. There is a distinct LED and status code and threshold for each net.

The table below lists the values and interpretation for the Network Status codes and thresholds.

0	No error. All RCs and scanned nodes are operating within scan timing parameters.
1-96	Some RCs are in communications failure and have not been successfully scanned for the COMALARM trip delay period. The number of such failed RCs is equal to the code value.
101-196	Some nodes on the net have quit responding to scanning. The number of such failed nodes is computed by subtracting 100 from the code. All RCs on those nodes are in COMALARM.
200	The scan of all nodes on the network is failing.

F.17.2 Diagnostic & Communications Error Codes

The diagnostic and communications error codes are registered whenever the scan for a particular RC fails. When such an event occurs, the code is pushed onto the diagnostic history stack (see code 49406) and copied into the RC status word (see code 4941zz). These may be interrogated at any time.

If the problem occurs during selftesting or configuration, the code is reported immediately. During normal scanning, the problem must continue for the COMALARM trip delay period before a communications alarm for that RC is triggered. The report for that alarm will then mention the code. The network status code is then updated appropriately. See table on next page.

The table below lists the values and interpretations for the most common error situations. Note that some codes are derived directly from standard error codes supported by specific protocols. The documentation for those products is then necessary for interpretation.

0	no error condition detected
352	specified net is invalid
354	protocol doesn't support the net address format
356	request timed out with no feedback
357	node address is invalid for selected protocol
359	node/driver incompatible with address mode
360	miscellaneous error parsing address string
361	some field was duplicated in address string
362	file type specifier in address string not supported
363	couldn't parse file number field in address string
364	couldn't map the I/O slot specified in address string
365	couldn't parse element field in address string
366	couldn't parse subelement field in address string
367	couldn't parse bit field in address string
368	too many routing nodes specified in address string
369	some routing node has illegal syntax
370	transaction aborted at user request
390	source channel data not available for RC link
410	no traffic received from the net
430	timeout with no recognizable response
431	timeout with no response at all
501	transaction took too long to transmit
601- 608	AEG/MODICON exception codes. That code can be determined by subtracting 600 from this code.

Refer to F.5, "General Modbus Reauirements," for details.

Continued on next page . . .

700	device has not been opened
705	DUART not present
710	net not configured with PLC-type protocol
715	bad serial io configuration parameter
725	background noise on network substrate
730	another modbus master already active
731	mbplus peer in monitor-on-line state
732	mbplus peer never getting token
735	diagnostic loopback test failed
750	a remote node has same node address
755	could not find any nodes on network
1540	NAK count limit exceeded for transmit msg
1541	ENQ count limit exceeded for transmit msg
1561	timeout waiting for response to command
2278	RAM allocation failed
2279	hardware failed self-test at warmstart
2280	cannot access net hardware

PLC Programming Code Table (Page 1 of 4)

Code	Description	Default	Range	Section
Remote Channel Status, Reading and Writing to PLC Data Register				
40ZZ	Read alarm status of Remote Channel ZZ		ZZ=0 to 96	F.8
40ZZ*	Read data register associated with RC ZZ		ZZ=0 to 96	F.8
40ZZ*N	Write value N to data register associated with RC ZZ		ZZ=0 to 96, N=0 to 65535	F.8
Remote Channel Message Recording and Reviewing				
4100 net	Record network ID message		net=1 to 5	F.9
41ZZ N	Record Remote Channel ZZ ALARM/PREAMBLE message at recording rate N (N is optional)	See Code 913	ZZ=1 to 96, N=1 to 4	F.9
42ZZ N	Record Remote Channel ZZ NORMAL/EPILOGUE message at recording rate N (N is optional)	See Code 913	ZZ=1 to 96, N=1 to 4	F.9
43ZZ	Review both Remote Channel ZZ messages (ZZ=0 for network ID messages)		ZZ=1 to 96	F.9
Remote Channel Programming (Configuration)				
4500	Sets current status as NORMAL for all RCs			F.10.2
45ZZ	Reads alarm criteria for RC ZZ		ZZ=1 to 96	F.10.2
45ZZ * net *node *addr *	Associate RC ZZ with specified network address		ZZ=1 to 96	F.10.1
45ZZ *	Read back the net address (net/node/addr) assoc. with RC ZZ		ZZ=1 to 96	F.10.1
45ZZ0	Disables Remote Channel ZZ		ZZ=1 to 96	F.10.2
45ZZ1	Sets alarm criteria to NORMALLY 1		ZZ=1 to 96	F.10.2
45ZZ2	Sets alarm criteria to NORMALLY 0		ZZ=1 to 96	F.10.2
45ZZ3	Sets alarm criteria to NO ALARM Status reporting only		ZZ=1 to 96	F.10.2
45ZZ4	Sets alarm criteria to NETERR mode		ZZ=1 to 96	F.10.2
45ZZ5 N	Sets analog low setpoint to N		ZZ=1 to 96, N=0 to 65535	F.10.2
45ZZ6 N	Sets analog high setpoint to N		ZZ=1 to 96, N=0 to 65535	F.10.2

PLC Programming Code Table (Page 2 of 4)

Code	Description	Default	Range	Section
Alarm Call Grouping				
45ZZ 9	Reads RC ZZ alarm call grouping linkage			F.10.3
45ZZ 9 DN	Links RC ZZ to phone numbers DN			F.10.3
45ZZ 9 *	Clears all RC ZZ alarm call linkages.			F.10.3
Alarm Trip Delays				
46ZZ	Reads Remote Channel ZZ alarm trip delay			F.11
46ZZ V	Set RC ZZ individual alarm trip delay to V	none	.1 - 9999.9 sec	F.11
46ZZ *	Resets RC ZZ individual alarm trip delay back to default of 2.0 sec.			
Remote Channel Linking/Network Bridging				
47ZZ * YY	Establish Alarm Link. ZZ source, YYdestination			F.12
47ZZ * YY *	Establish Data Link. ZZ source, YYdestination			F.12
47ZZ	Report all linked channel pairs using ZZ as source or destination. If ZZ=0 reports all linked channel pairs.			F.12
47ZZ -0	Clears all linked pairs using ZZ as source ordestination If ZZ=0 clears all linked channel pairs.			F.12
47ZZ * YY -0	Clear Specific Link using ZZ as source and YY as dest.			F.12
Serial Communications Parameters				
Note: See Code 4910 for default value for "net" in all of the following				
4900 net	Announces the current settings of all serial parameters for "net"			F.13
4900 net *	Resets all serial parameters for "net" to their factory defaults		See Below	F.13
4901 net *N	Read/Set baud rate for net to N	9600	50-57600	F.13.1
4902 net *N	Read/Set data bits for net to N	8	7 or 8	F.13.1
4903 net *N	Read/Set stop bits for net to N	1	1 or 2	F.13.1

PLC Programming Code Table (Page 3 of 4)

Code	Description	Default	Range	Section
Serial Communications Parameters . . . *Continued from p. F-26*				
Note: See Code 4910 for default value for "net" in all of the following				
4904 net *N	Read/Set parity for net	protocol dependent	odd, even, none	F.13.1
4905 net *N	Read/Set local node address for net to N	1	1-256	F.13.2
4906 net	Read protocol type for net N	Factory Configured	Not user settable	F.13.2
4907 net *N	Read/Set COMALARM Trip Delay	30 sec.	N=0.1-999.9 sec.	F.13.3
4908 net * V	Read/Set link-level timer.	Protocol Specific	V is in msec.	F.13.3
4909 net * V	Read/Set applications-level Timer	Protocol Specific	V is in msec.	F.13.3
49 50	Reads/Sets all protocol	varies	See applicable notes	F.13.4,
Miscellaneous				
49 *	Repeat the previous command which began with a '4'			F.14
4910 N	Read/Set default net to N	1	1 to 5	F.14
4911 N	Read/Set default node to N	1	protocol dependent	F.14
Clearout Operations				
493 *net	Globally disables/enables network communications		Acts as toggle	F.15
4935 4	Clears all RC user recorded speed messages			F.15
4935 5	Clears all RC net addresses and criteria			F.15
4935 8	Clears out all communications failure codes and counts			F.15
Diagnostic Readouts				
Note: See Code 4910 for default value for "net" in all of the following				
49 2 net	Reads current Network Failure threshold for net			F.16
49 2 net *N	Set Network Failure threshold to N		0 - 200	F.16
49 30 *net	Perform diagnostic self-test on specified net			F.16
49 40	Reads all 4940 X diagnostic for all networks			F.16
49 40 *net	Reads all diagnostic information for net			F.16

PLC Programming Code Table (Page 4 of 4)

Code	Description	Default	Range	Section
Diagnostic Readouts . . . *Continued from p. F-27*				
Note: See Code 4910 for default value for "net" in all of the following				
49 40 1	Reads time to complete RC table scan			F.16
49 40 2 net	Reads communications alert status for net			F.16
49 40 3 net	Reads communications alert count for net (Append with 0 to clear count)			F.16
49 40 4 net	Reads all node address whose RCs have current communications failure			F.16
49 40 5 net	Reads all RCs on net currently having communications failure			F.16
49 40 6 net	Reads diagnostic codes for last 10 network problems			F.16
49 41 ZZ	Reads communicatons status for RC ZZ			F.16
49 41 ZZ*	Reads count of COMALARMS for RC ZZ			F.16
49 42 net	Reads list of disarmed (code 45ZZ0) RCs			F.16
49 43	Reads list of uninitialized RCs			F.16
49 44	Reads list of all RCs not using the default alarm criteria			F.16
49 45 ZZ	Reports net address, alarm criteria, setpoints, links and alarm status for RC ZZ			F.16

G Cabling Diagrams

G.1 RACO VSER-01 Serial Cable Connection Diagram

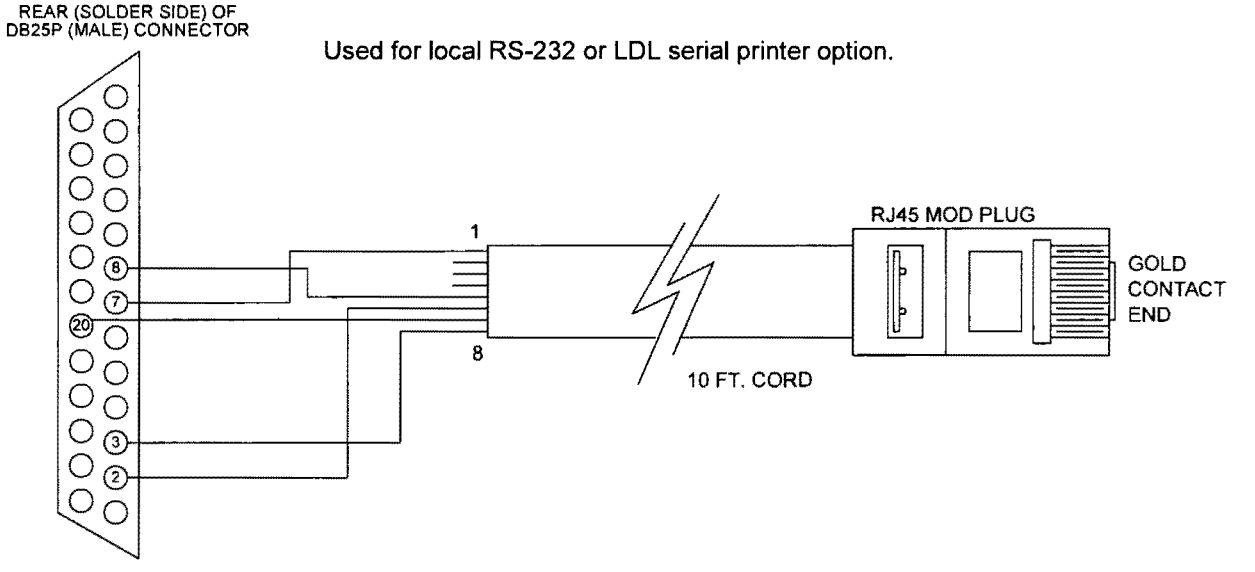

25 Pin Connector Pin-Out		
2	RXD	Data to VB
3	TXD	Data from VB
7	SGND	Signal Ground
8	DCD	Carrier Detect - Handshake Out (not used)
20	DTR	Data Terminal Ready - Handshake In (not used)

G.2 RACO VPPC-1 Parallel Cable Connection Diagram

Used for LDL parallel printer option

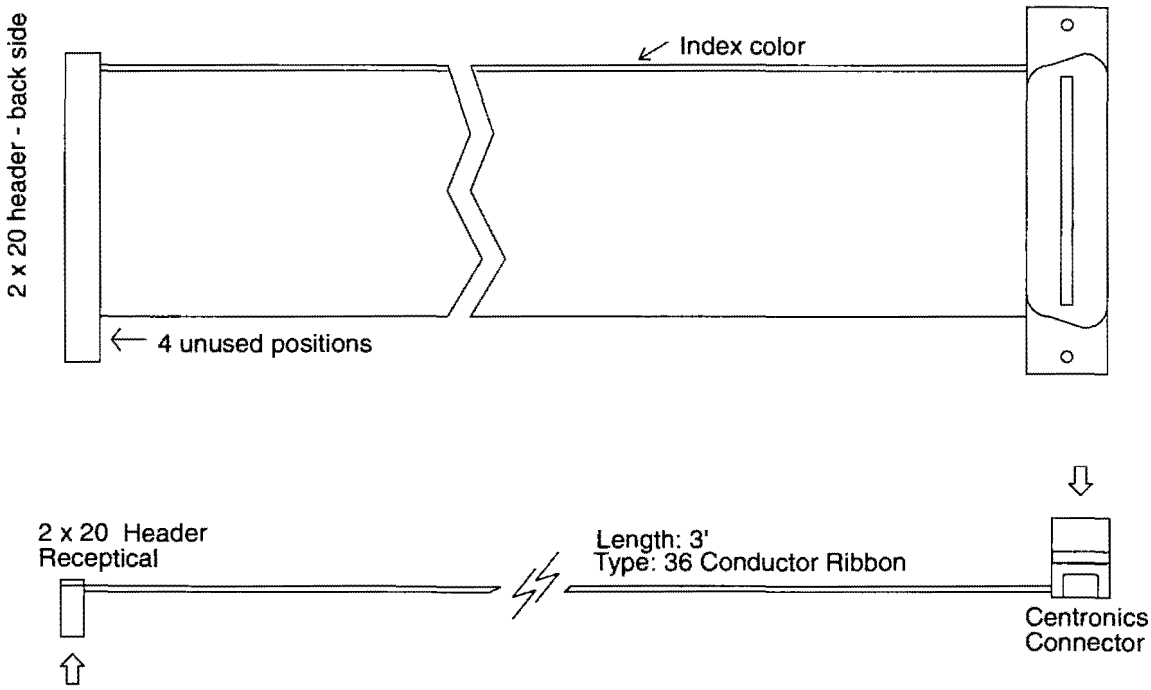

G.3 Verbatim PLC Network Connections Diagram

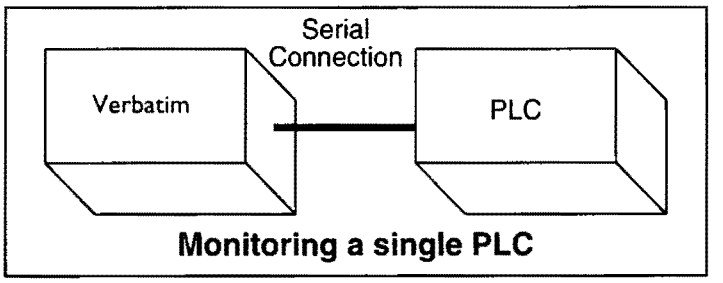

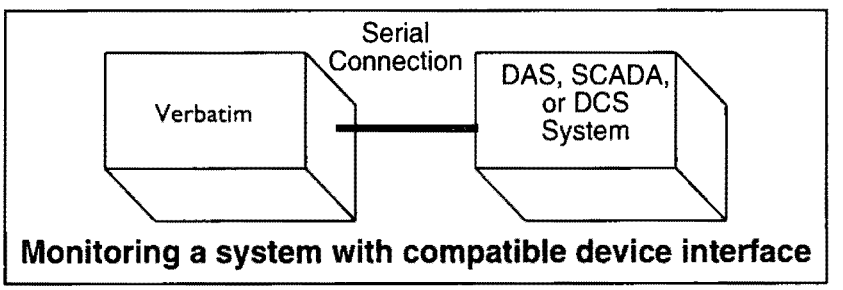

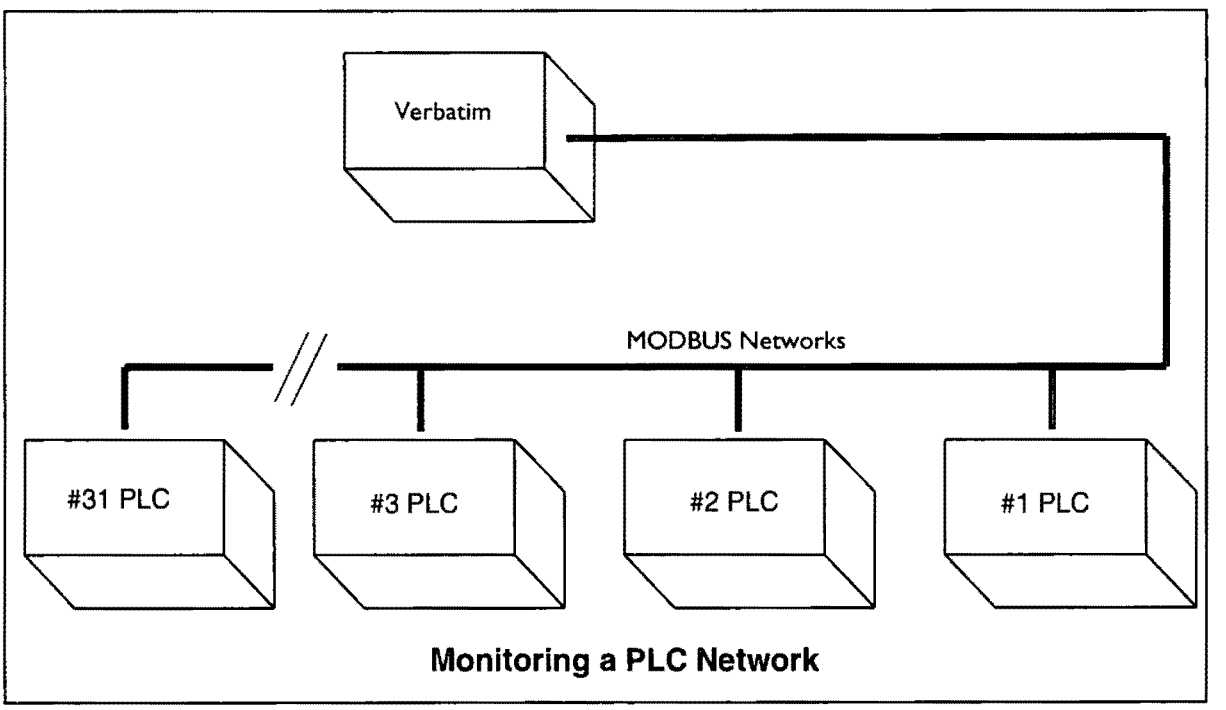

G.4 RACO VMB-2 Serial Cable Connection Diagram

for use with Modicon PLC's using Modbus Protocol

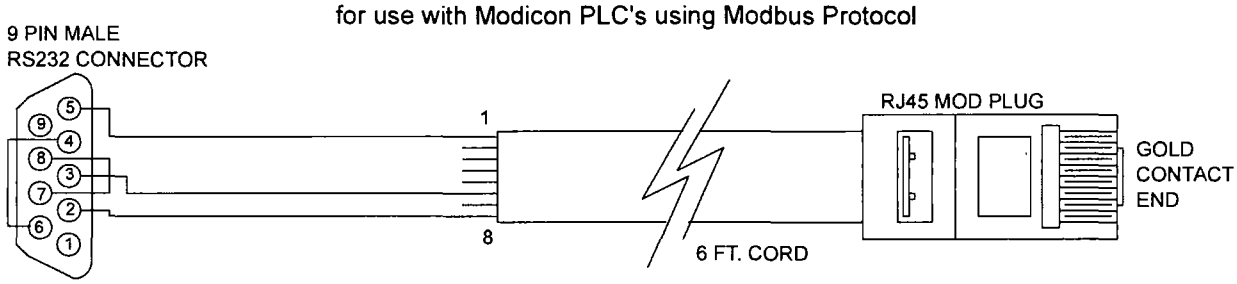

9 Pin Connector Pin-Out		
2	TXD	Data from Verbatim
3	RXD	Data to Verbatim
4	DSR	Data Set Ready - Jumpered to DTR at 9 pin conn. only
5	SGND	Signal Ground
6	DTR	Data Terminal Ready - Jumpered to DSR at 9 pin conn. only
7	RTS	Request to Send - Jumpered to CTS at 9 pin conn. only
8	CTS	Clear To Send - Jumpered to RTS at 9 pin conn. only

G.5 RACO VMBM-1 Serial Cable Connection Diagram

for use with Modicon Micro PLC's using Modbus Protocol

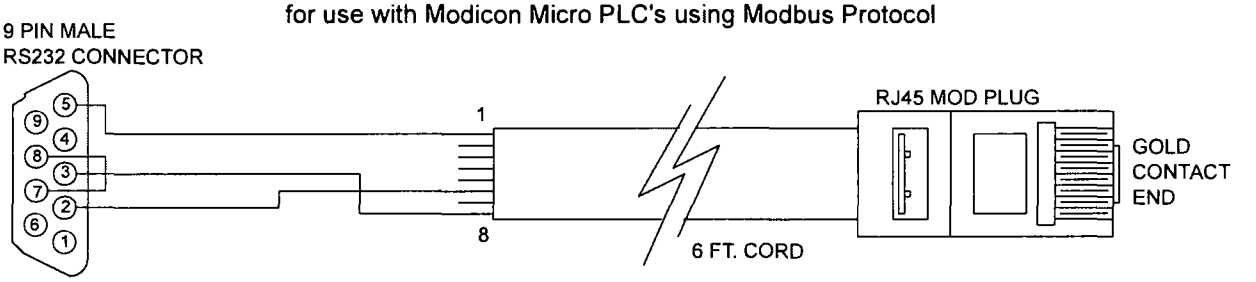

9 Pin Connector Pin-Out		
2	RXD	Data to Verbatim
3	TXD	Data from Verbatim
5	SGND	Signal Ground
7	RTS	Request to Send - Jumpered to CTS at 9 pin conn. only
8	CTS	Clear To Send - Jumpered to RTS at 9 pin conn. only

Note:

Connection to Modicon Micro PLC requires use of Modicon Cable Part Number 110XCA28201, 110XCA28202, or 110XCA28203 plus adaptor 110XCA20300. This combination of cable plus adaptor mates with above RACO cable. The Modicon cable is a flat, eight wire cable with RJ-45 male connectors on each end. The Modicon adaptor is an RJ-45 female to D-sub 9 Pin female adaptor.

G.6 RACO VBB-1 Serial Cable Connection Diagram

for use with Bristol Babcock DPC 3330 or 3335

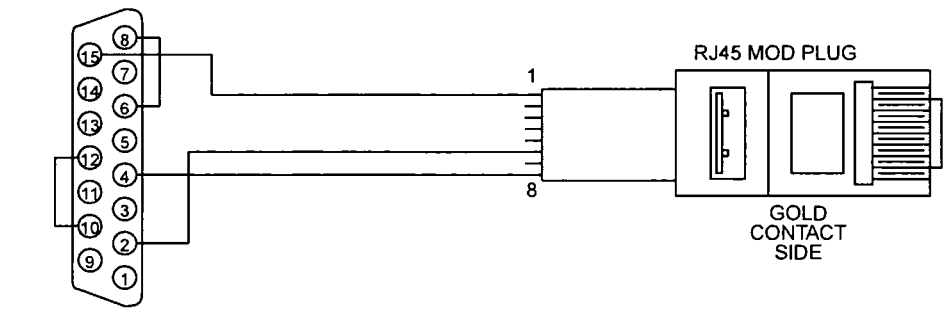

15 Pin Connector Pin-Out		
2	RXD	Data to Verbatim
4	TXD	Data from Verbatim
6	JUMP	Jumpered to pin 8
8	JUMP	Jumpered to pin 6
10	JUMP	Jumpered to pin 12
12	JUMP	Jumpered to pin 10
15	SGND	Signal Ground

G.7 VTI 405/505-DCM Serial Cable Connection Diagram

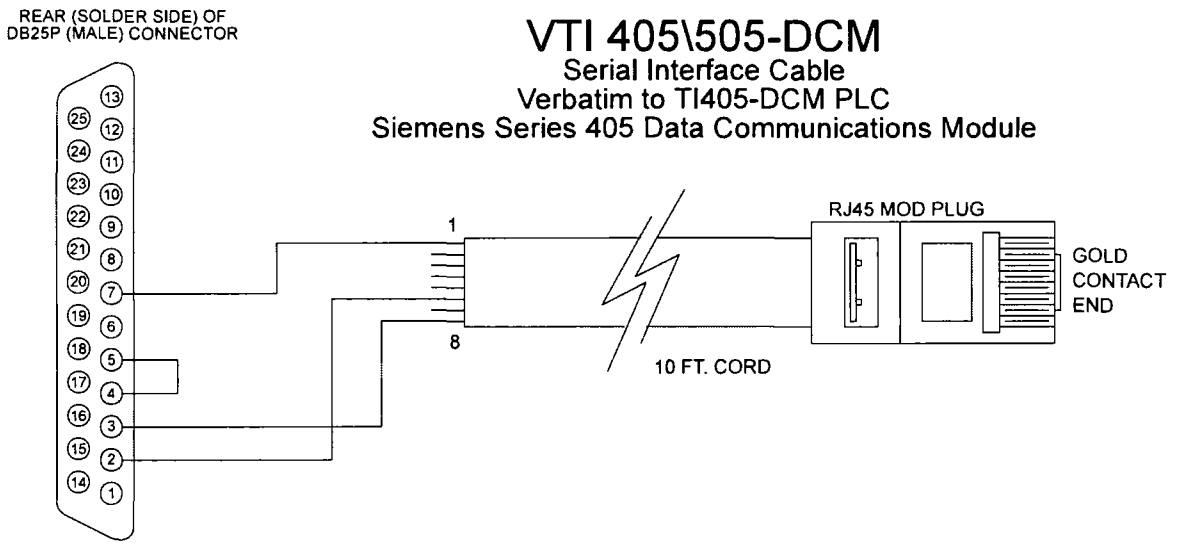

25 Pin Connector Pin-Out		
2	RXD	Data to VB
3	TXD	Data from VB
7	SGND	Signal Ground

H Verbatim Floobydust

H.1 Adjusting Internal Speaker Volume

Speaker volume may be adjusted via the trimpot marked SPKR VOL located in the upper right hand area of the main circuit board.

This trimpot also adjusts the level of the audio signal that can be obtained via jack AJ1. However, sensitive audio systems may require an additional signal level attenuator in order to prevent overloading.

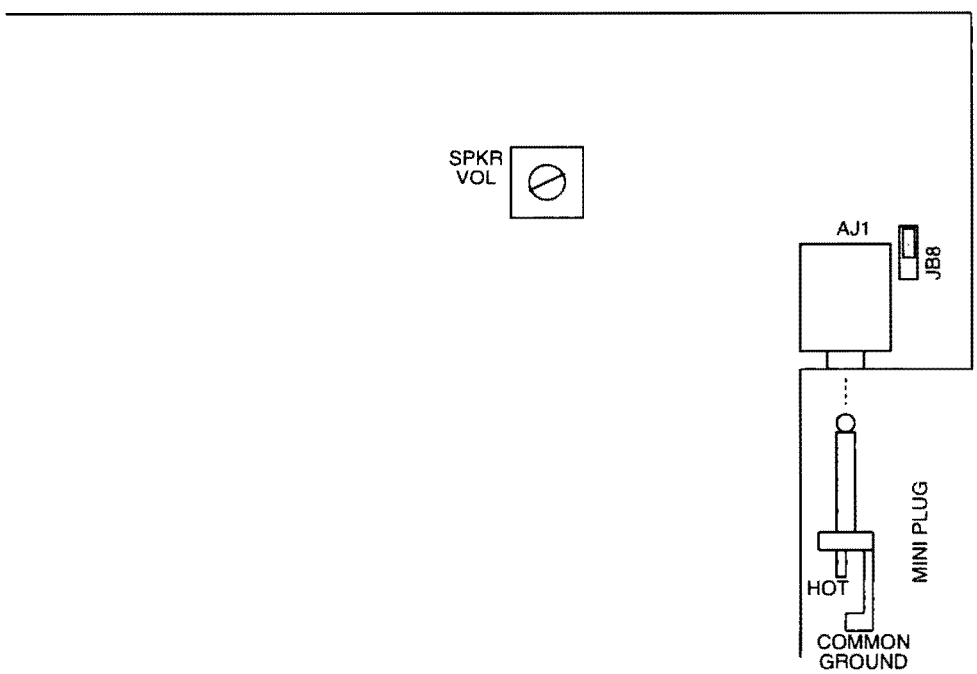

H.2 External Speaker Connections

An audio output suitable for driving an external speaker of 4 to 16 ohms impedance, headphones, or other audio system, is available via jack AJ1, located in the upper right hand area of the main circuit board. This jack must be configured to deliver audio signal output by placing a jumper shunt across the upper pair of pins on the three-pin header JB8, located next to AJ1.

Note that AJ1 is a dual purpose jack which may be used either for audio output or DC power input, but not for both simultaneously.

To make connection with AJ1, use a standard single-circuit "MINI" plug. The tip end will be the audio signal; the shell will be ground.

The output signal has a nominal impedance of 8 ohms and a nominal average amplitude of 1 volt RMS, when the audio level trimpot, described below, is set to full clockwise position.

H.2.1 Specifications for Audio Output from Jack AJ1

Nominal output impedance	8 ohms
Nominal average output amplitude with 8 ohm load	1 VRMS

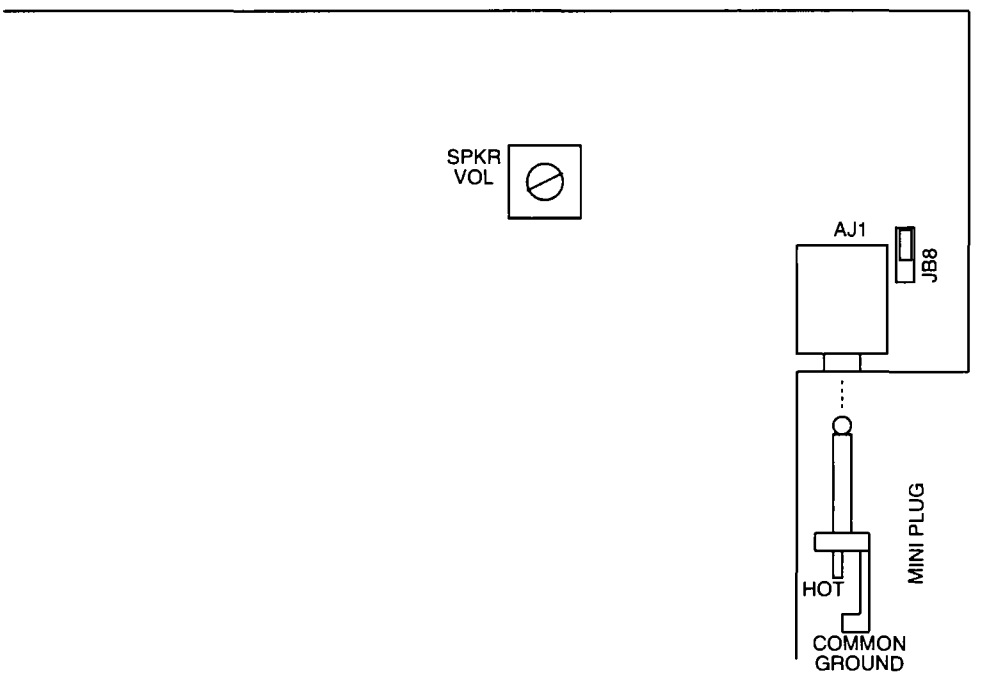

H.3 Alternative Power Sources

As an alternative to the 120 VAC input, an external DC power source can be used. The DC power source should have a current capacity of at least 500 ma DC and a voltage from 8 to 14 VDC. Actual current consumption will be approximately 250 ma standby and 375 ma while phoning and speaking, plus whatever current is required to charge the internal 6 volt, 4 AH gel-cell battery. This supplemental charging current will be roughly 25 ma when the battery is already fully charged, and up to 200 ma if the battery is being recharged after a discharge. Option cards such as analog, remote supervisory control etc. will also moderately increase the current being drawn.

DC power should be connected via a standard single-circuit "MINI" plug, inserted into jack AJ1 located in the upper right hand corner of the main circuit board. This jack must be configured to accept DC power input by placing a jumper shunt across the lower pair of pins on the three-pin header JB8, located next to AJ1. **The positive (plus) side of the power source must go to the end "tip" of the plug; reversing this polarity can damage the product.**

Note:

Note that AJ1 is a dual purpose jack which may be used either for audio output or DC power input, but not for both simultaneously. Note also that the AC power fuse FU1 is bypassed with this configuration. It should be removed to avoid confusion.

The front panel ON/OFF control will operate as with standard 120 VAC power input. If the external power source is interrupted, the unit will switch to gel cell battery power and go into power failure alarm.

The Verbatim autodialer is capable of being powered by other types of power source, including 240 VAC, on special order. Contact factory for details.

H.3.1 Standard DC Power Power Specifications

Input voltage range	8-14 VDC
Recommended minimum current capacity	500 ma DC
VSS-4C-32 current drawn, less battery, standby	275 ma
VSS-4C-32, less battery, phoning/talking	400 ma
Added current to maintain charged battery	25 ma
Added current to charge discharged battery	200 ma

DC Power Connection Diagram

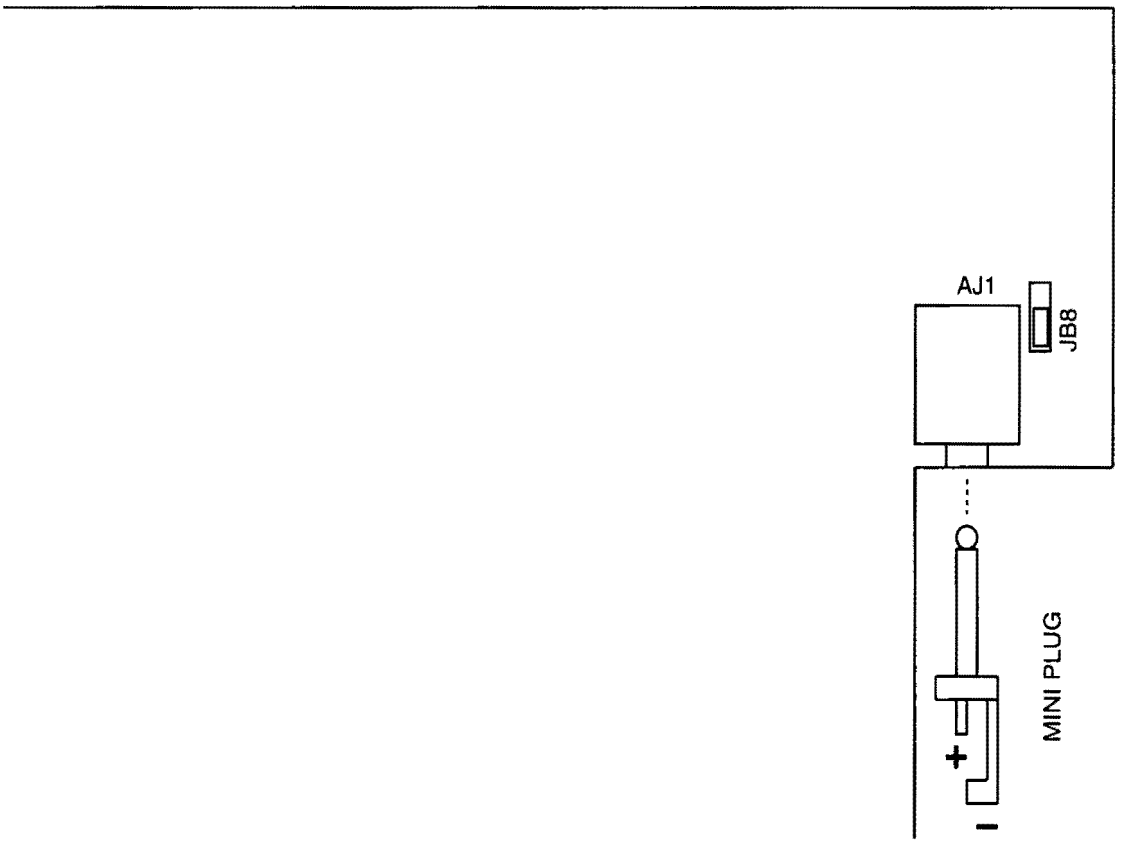

H.4 Speech Recording Times

The following is a table of available speech recording times on Verbatim autodialer.

To find the available amount of speech recording time, first determine the total number of channels on the unit, then find the corresponding row indicating the number of seconds of speech recording time at the various recording rates.

Example: A VSS-4C-32, has a total of 36 channels (4 contact and 32 plc channels). Therefore the available recording times are 130, 200, 270 or 399 seconds, depending upon which recording rate is selected by the user.

Total# OF Channels	# OF RAM CHIPS	# OF Seconds @ Rate1	# OF Seconds @ Rate2	# OF Seconds @ Rate3	# OF Seconds @ Rate4
1-8	1	26	40	54	79
9-16	2	52	80	108	159
17-24	3	78	120	162	237
25-32	4	104	160	216	318
33-40	5	130	200	270	399
41-48	6	156	240	324	476
49-56	7	182	280	378	555
57 UP	8	208	320	432	624

The above table indicates the recording times that are shipped standard. However on special order, the available recording time can be increased to correspond with any row in the table.

H.5 PBX Support

Interfacing the Verbatim to PBX or PABX phone systems can occasionally present problems. Some PBXs have a non-standard dialtone. Additionally, in many PBXs, you must first press a special key, like a '9' to get an outside line. After pressing the '9' there may be a short delay followed by the dialtone for the outside line.

By turning OFF Phone Fault Detection you can avoid problems with non-standard dialtones from your PBX system. Then Phone Fault Detect will not falsely indicate a telephone line interruption.

Even with Phone Fault Detect OFF you can still accomplish dialtone detection on outside lines. Simply add the Tone Detect key sequence to the phone number string after the '9' or other digit to request an outside line.

H.5.1 Cautionary Notes About Interfacing to PBXs

Must Be an Analog Line

Some PBX systems are either partially or entirely digital. That is, voice and signaling information is converted to a digital representation. Voice information arriving at the PBX from the outside is converted from analog to digital. Voice information leaving the PBX to the outside is converted from digital to analog. Phone sets within a digital system may be interfaced by digital signals only. In such systems it may be difficult, but usually not impossible, to obtain a "standard" analog phone line to use in interfacing devices such as a Verbatim . It may be necessary to contact the vendor of your PBX system for information on addition of analog lines.

Lines Can Cause Damage

Caution is advised. Some telephone lines within digital PBXs present voltages which can be dangerous to RACO's equipment. If you are attempting to interface a Verbatim inside of a PBX it would be a good practice to have the phone line you intend to use checked for "unusual" voltages and signals.

With few exceptions, if you can get a standard telephone set to word on a PBX line then you will be able to make the Verbatim work as well.

H.6 Local Alarm Relay Option

The Verbatim provides a 5 volt output that is turned on whenever the unit goes into alarm. This is available at JB4, located at the top center of the main board. Use a molex style 2 pin connector to plug onto the JB4 pins. This output can activate a sensitive (500 ohm +) relay such as a Potter & Brumfield KHU-17D11-6). Connect a 150 ohm,1/4 watt resistor across the relay coil. The Potter & Brumfield relay plugs into a socket (#27E166) which is shown in the accompanying figures. Note that it has four separate circuits in SPDT form. This relay may be used for local alarm, line seizure, or both.

H.6.1 Local Alarm Relay Configuration

1. Wire the relay coil as described in the introduction.
2. Wire the local alarm to one of the four circuits of the relay. In the illustration, the numbers refer to the four separate circuits, and C refers to the coil terminals.
3. Note that the Verbatim does not provide the power for the alarm, it functions only as a switch.
4. The program code for Local Alarm Relay configuration is
   960 00 ENTER
   which is the factory default.

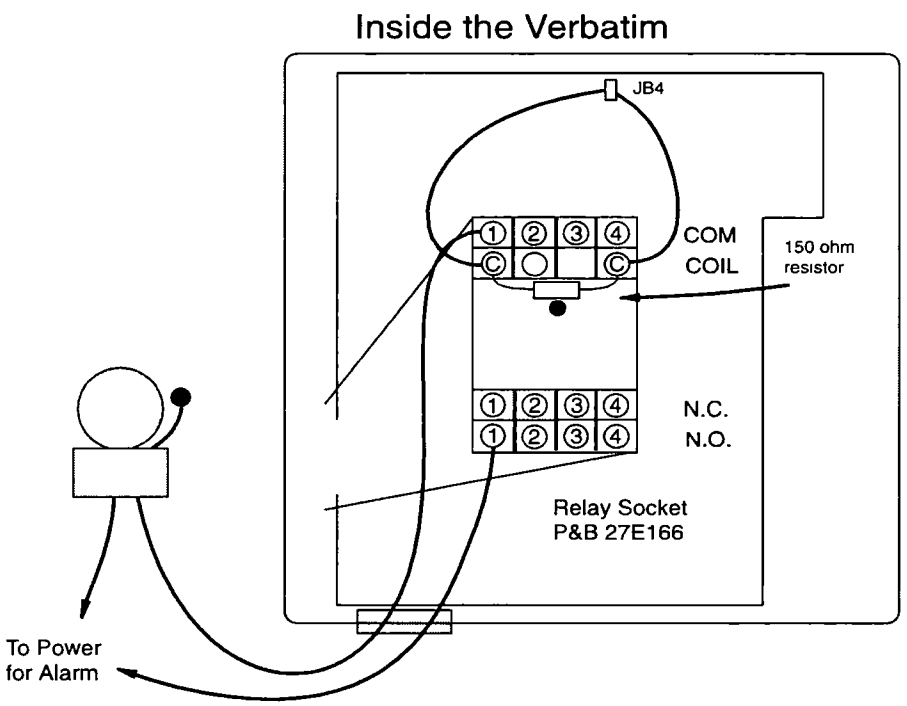

H.7 Line Seizure Option

Line Seizure is a feature that ensures that the dialer will seize the phone line when it goes into alarm, cutting off any phones, FAX, or answering machines that may be on line at the time (these are called the *downstream* phones, as they are *downstream* from the Verbatim). The unit waits two seconds to allow a dial tone to come up, then dials out. These phones will remain cut off until the alarm is acknowledged.

The Verbatim provides a 5 volt output that is turned on whenever the unit goes into alarm. This is available at JB4, located at the top center of the main board. Use a molex style 2 pin connector to plug onto the JB4 pins. This output can activate a sensitive (500 ohm +) relay such as a Potter & Brumfield KHU-17D11-6. Connect a 150 ohm, 1/4 watt resistor across the relay coil. The Potter & Brumfield relay plugs into a socket (#27E166) which is shown in the accompanying figures. Note that it has four separate circuits in SPDT form. This relay may be used for local alarm, line seizure, or both.

The phone jack must be an RJ-31X, which is available from the phone company or a phone supply outlet. In operation, the Verbatim plugs into the RJ-31X jack and makes contact with the middle four pins, which are the standard red, green, yellow and black wires.

Note that you may combine the Local Alarm Relay with Line Seizure feature simply by using one of the spare circuits (3 or 4) for the local alarm. It breaks the downstream connections, thereby seizing the line, then waits two seconds to allow a dial tone to come up, then dials out.

H.7.1 Line Seizure Installation

1. Wire the relay coil as described in the introduction.
2. Wire the four terminals of the telephone input terminal strip to the relay a follows (please refer to accompanying figures):

Terminal Strip	Relay
R	COM circuit #2
G	COM circuit #1
Y	N.C. circuit #1
B	N.C. circuit #2

3. Wire the special RJ-31X line seizure jack as follows (refer to the accompanying figures):

   Connect a jumper wire from terminals 1 to 3 and a second jumper wire from terminals 6 to 8.

   Connect the incoming telephone line red wire to terminal 4 and the green wire to terminal 5.

   Connect the downstream extension phones to terminals 1 and 8.
4. Plug the Verbatim into the RJ-31X socket.
5. Program the Verbatim with code:
   `960 01` ENTER
   This is the code for Line Seizure configuration of the Local Alarm Relay.

Wiring the RJ-31X Line Seizure Jack Diagram

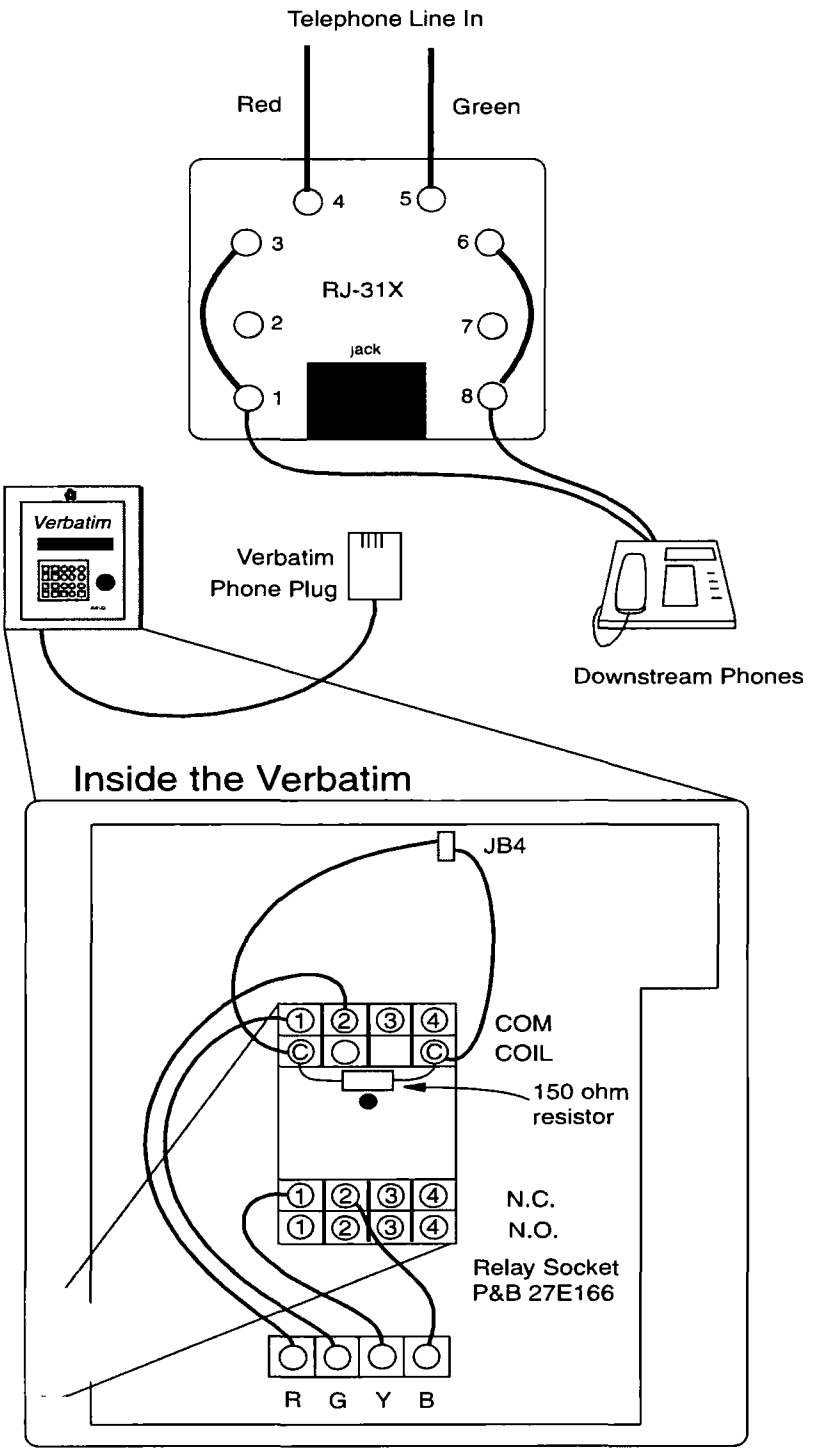

H.8 Heater / Thermostat Option

The heater/thermostat option is intended to provide warming of the product when it is exposed to particularly cold ambient temperatures.

The thermostat applies 120 VAC power to two chassis-mounted resistors, when it senses temperatures below approximately 40 degrees F. The resistors dissipate a combined 75 watts of power. The amount of temperature elevation above ambient temperature that this provides depends on the thermal insulation of the enclosure and "heat sinking" into the surface which the unit is mounted to. The unit's aluminum enclosure provides relatively little thermal insulation by itself. However if RACO's fiberglass NEMA 4X enclosure option is used, a temperature elevation of about 75 degrees is provided.

If the unit is to be powered by something other than 120 VAC and you need a heater/thermostat, consult factory.

Heater/Thermostat Option	
Power source required	120 VAC
Power dissipated when activated	75 watts
Nominal activation temperature	40 deg F
Nominal heat rise in fiberglass NEMA 4X enclosure	75 deg F

Heater/Thermostat Mounting and Wiring Diagram

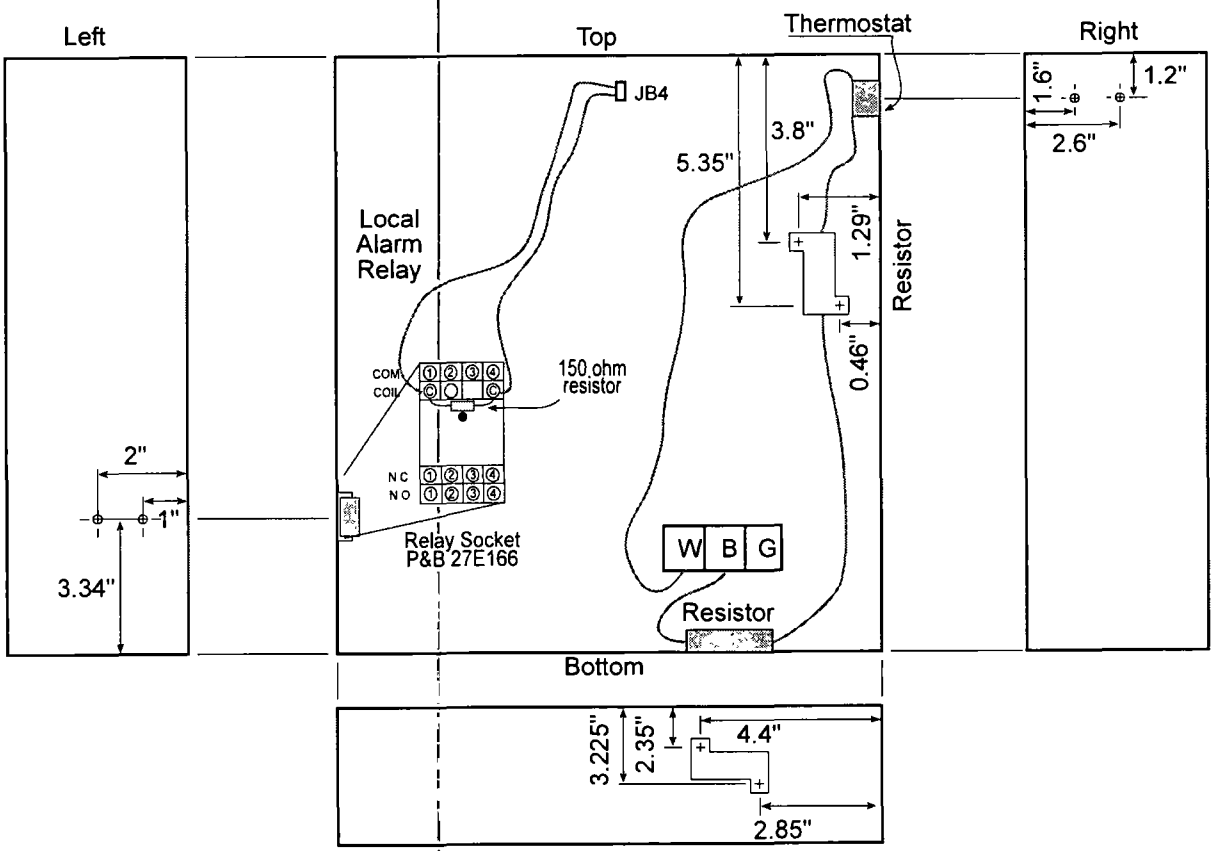

H.9 Connecting to a Radio Transmitter

If you have a radio transmitter that can provides for external connection of an audio signal input and also for connection of an external contact closure to key on the transmitter, you may connect it to the Verbatim autodialer. However you should also consider the alternative of using RACO's CELLULARM cellular phone system, which provides a superior means of signalling where regular land line phone service is not available.

Note that the radio operation described below is not compatible with installation of the Telephone Line Seizure option.

To obtain the contact closure used to key on the transmitter, it is necessary to solder some special connections on the back of the main circuit board. **This step is not necessary if your unit has been supplied from the factory with the RF Interface option.**

First, disconnect the gel cell battery and remove all AC power connections. Remove any option cards. Then carefully remove the speech card located at the top of the unit, via its two mounting screws. Be careful to retain the plastic spacers located behind these screws, for use when replacing this speech card. Flex the card slightly to clear the two mounting pegs and pull the card straight outward.

Remove the main circuit board by removing the six 6-32 mounting screws. You may also wish to unplug the contact input terminal strips and the ribbon cable which leads to the front panel. Solder a pair of jumper wires to the back of the board as indicated in the Jumper Wires for RF Link Diagram. This step connects the auxiliary contacts of off-hook relay K1, to the Y and B terminals of telephone terminal strip TS2.

Re-assemble the unit and restore any connections which were removed. Be sure that the ribbon cable's connector is accurately and firmly seated.

Connect the Y and B terminals on TS2, to the external keying input of your transmitter. The transmitter will now be keyed on whenever the off-hook relay is activated.

The method of audio connection depends on whether the product is to be connected to a regular phone line in addition to the radio transmitter. If a sensitive microphone input is used, additional attenuation may be required to avoid overloading the audio input.

If phone line operation is required in addition to radio operation, establish the audio connection into the transmitter via jack AJ1, as described in the section on EXTERNAL SPEAKER CONNECTIONS.

If no phone line operation is required, you may instead remove the phone cord and obtain an isolated 600 ohm, line-level audio signal at the TIP and RING terminals of TS2.

In operation, the transmitter will be keyed on whenever the off-hook relay is activated -- i.e. whenever the product is attempting to place or answer a phone call. Thus, if an ordinary phone line is also used, all phone activity will also be transmitted.

If no phone line is used, it will still be necessary to program a "dummy" phone number consisting of a single digit "1", using program code 7 0 1 1. Also, program for touch tone dialing using program code 9 0 1 1. When the unit goes into alarm, it will activate the off-hook relay and therefore the transmitter. Then it will issue the single digit tone, and a few seconds later it will begin the speech message, continuing as it would for a regular phone call. The number of message repeats may be altered if desired, using program code 907.

If a phone line is also used, program the appropriate phone numbers as you would ordinarily do. All phone calls will also be transmitted by radio. If you desire to have selected "calls" go out only over the air and not to any real phone number, program the single "dummy" phone number as described above. This single digit will silence the dial tone which would otherwise be broadcast along with the speech message.

Alarm calls will continue until acknowledged, unless the unit is programmed to cease calling when the alarm violation ceases, using program code 9 2 3 2.

In order to acknowledge alarms, it will be necessary to phone the unit back (if a phone line connection is also being used), or else press one of the keys on the front panel.

If a two-way transceiver is available which includes some kind of tone signalling and detection feature that results in momentary closure of a local relay contact at the autodialer locations, this contact may be used to place inquiry calls to the unit and also to acknowledge alarms, by radio. Contact factory for details.

Note that it will not be possible to perform remote programming of the unit with these radio connections.
A CELLULARM cellular system eliminates all such contraints.

TS2 Connection Diagram

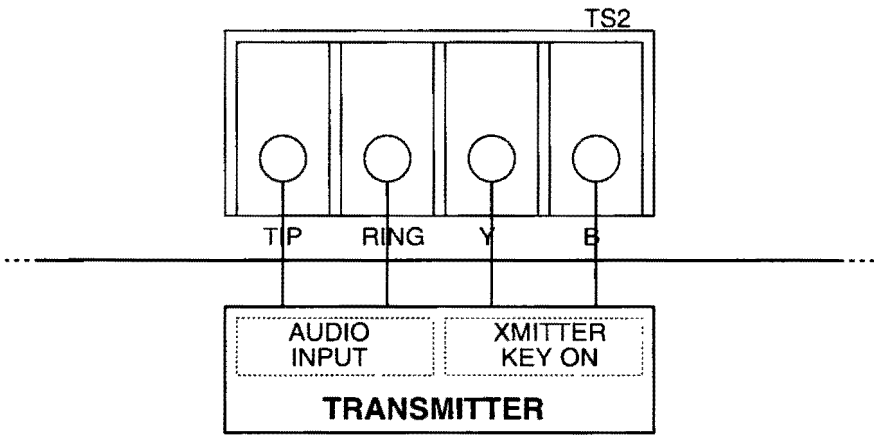

Jumper Wires For RF Link Diagram

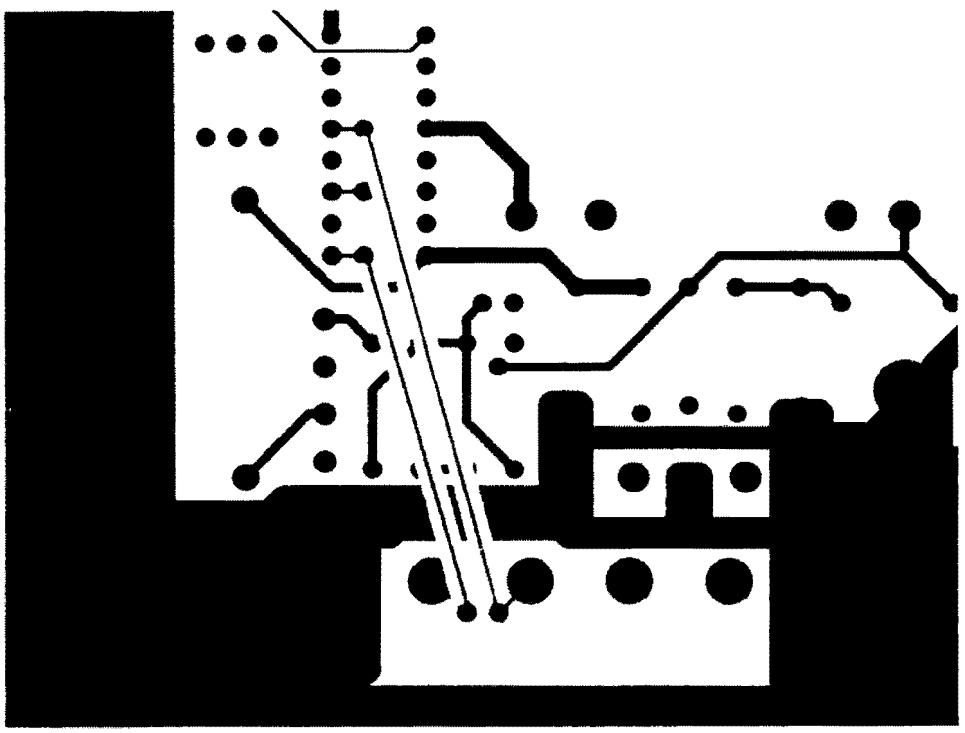

H.10 Calling a Pager

H.10.1 Introduction

It has become fairly common to have the autodialer call a pager system with an alarm call. The dialer is well equipped to handle many of the current pager protocols, and an overall understanding of the sequence of events will make the required programming go smoother.

Typically, a call to the pager is placed. After a short period (usually 5-12 seconds), the pager answers then gives a beep or a short burst of beeps. This is the signal to begin entering the number you want to be received and displayed by the beeper. When the information is complete, the pager terminal will hang up.

Note:

RACO strongly recommends that you program other personnel phone numbers at the appropriate place in the dialing list. This is to insure that if for some reason the pager system cannot be activated, you will get a timely warning from your autodialer.

H.10.2 General Programming Considerations

In most cases, the entire pager calling sequence is handled within the dialing string of the Verbatim. That is, it is all part of the phone number. The unit will handle up to 60 digits, including any timing delays you insert. The dialer must be programmed for touch tone dialing (program code 9011), as a pager terminal will not recognize pulse dialing.

Numeric Pager Support

Support for Numeric Pagers is comprised of a number of Verbatim autodialer features:

- Ability to add delays into a phone number string

  Often needed to pause after dialing the pager system's digits and emitting the caller's ID digits in the phone string.

- Ability to add DTMF # (or DTMF*) into a phone number string

  Often needed as a terminator character to inform the paging system that the last digit has been entered.

- Ability to add a pause for tone detect anywhere in the phone number string

  Sometimes used to detect the paging system's beep(s) heard after it answers.

- Ability to defeat voice annunciation for a specific phone number

  Often just dialing the pager system and emitting a DTMF ID sequence is sufficient for that phone call. Voice reports only delay the calling of subsequent numbers.

- Ability to add DTMF A, B, C, and D tones to phone number string

  These DTMF characters don't appear on standard telephones and may be used to differentiate automation equipment from humans calling the paging system.

Except for simple delays, entry of these additional digits into a phone number string requires a two key sequence. For example, to enter a '#' character into a phone number string, either at the front panel or over the phone, press the '*' key followed by the 8 key. This two key sequence will enter the single '#' character into phone number string.

The complete list of special digits is as follows:

Desired Result	User Enters	Voice Speaks
DTMF 'A' in phone string	*1	A
DTMF 'B' in phone string	*2	B
DTMF 'C' in phone string	*3	C
DTMF 'D' in phone string	*4	D
No voice annunciation for this number	*5	PHONE
Pause for tone detect	*6	TONE
DTMF '*' in phone string	*7	STAR
DTMF '#' in phone string	*8	POUND

Case 1: Simplest Case Pager

The simplest case is when you only have to call the pager and can hang up as soon as it answers, with no information being passed to the pager except that someone called. If you have only one dialer (and no one else uses the number!) you assume that any call from the pager is a Verbatim alarm call, and proceed from there. Of course, if you had two possible callers, you wouldn't know which one had called.

Example:

Set the first phone number to call the pager, the second phone number to call the plant foreman. Program 701 9 *6 1 713 235 3456 ENTER. (here, 701 signifies the first phone number, 9 to get an outside line, *6 to get an outside line dial tone, 1 713 235 3456 our hypothetical long distance call to a pager, and ENTER to complete the phone number). Program 702 9 *6 548 7632 ENTER (this is the second phone number, to call the foreman in case the pager call doesn't get through).

Case 2: Passing a Phone Number to a Pager

Some pager systems will allow the caller to enter a phone number (or other ID number), which is then relayed on to the beeper. When the person with the beeper gets the call, he will know immediately from the number which dialer has called. This is a good system if you are using multiple dialers, or have other pager calls in addition to autodialers.

Example:

Consider the following example of initiating a call to a paging system. We will assume here we don't have to dial 9 to get an outside line for this example. The paging terminal phone number is entered, followed by a CPM wait *6 to wait for the pager to beep. After that, an ID number is entered. Often the ID number is simply the phone number at the Verbatim autodialer site.
A # terminator *8 is inserted. Finally, the characters *5 are added to designate this phone session as a pager call and not a voice annunciation. Entry of additional delay digits may be required for proper timing of the pager call session.

The phone number string for this example with the first phone number calling a pager, is:

```
701 2352456 *6 5481234 *8 *5
```

Program 702 548 7632 ENTER (this is the second phone number, to call the foreman in case the pager call doesn't get through).

❖

Exception:

With some pager systems, Call Progress Monitoring (CPM) on may cause a delay that will not allow the pager message to be transmitted in the time allowed. If this is the case with your paging system, either have CPM in the default off state or, if you want CPM on, time delays can be used in the place of *6 pause for tone detect. The critical task here is to time the delay from the last digit dialed until the pager beeps. The delay time needed can be determined by using a stopwatch or a clock with a second hand. You want to time this delay to the nearest second, then add 1 second to be sure. Consult the diagram on page H-20 to see the time line of events, then program the dialer.

Example 1:

Delays are added by pressing the MINUS # key on the front panel. Each delay is normally 1 second, but can be programmed (using 928 N) to be any length from 1 to 10 seconds.

We made each delay 2 seconds long by programming code 928 to be 2 seconds for each delay used: program 928 2 ENTER. We then called the pager, and determined timed the delay between the last digit dialed and the pager beep was 6 seconds.

We programmed our pager phone number: 701 6586713 ### 18007226999 *8 *5, where # are delays inserted.

Example 2:

In this example we will enter an ID number before entering a phone number into the pager. The pager phone number is 1 713 2352456. The ID number is 7711. The dialer is at 5481234. Calling the pager by hand from the dialer site, we find the following:

- dial pager
- wait for pager to answer (6 seconds)
- pager beep
- enter ID (7711)
- wait for new pager prompt (2 seconds)
- enter dialer phone number (5481234)
- hang up

  The phone number to enter will look something like:

  1 713 235 2456 (delay 1) 7711 (delay 2) 548 1234
- In our example we programmed Phone #1:

  701 1 713 235 2456 ### 7711 # 548 1234 ENTER

  (Remember that each # represents a 3 second delay).
- and Phone #2:

  702 548 7632 ENTER (our foreman again)

Case 2: Pager Calling Sequence Using Delays (Example 1)

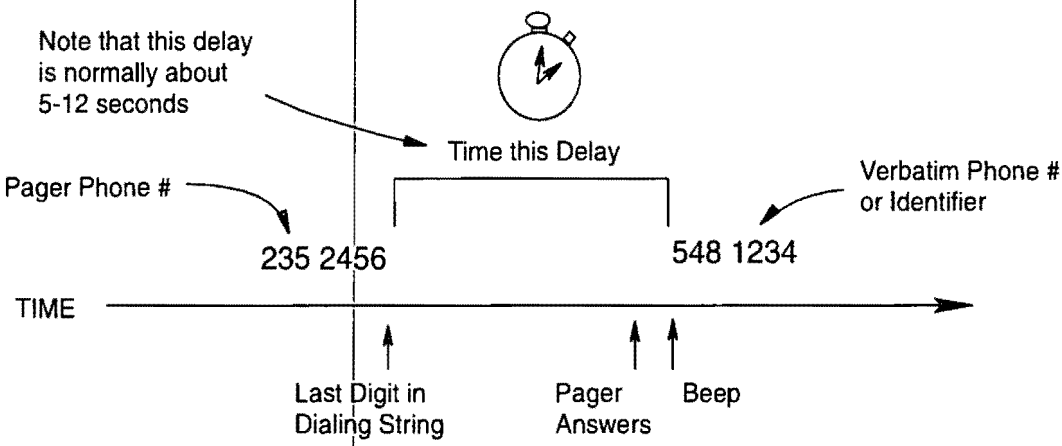

Case 2: Pager Calling Sequence Using Delays (Example 2)

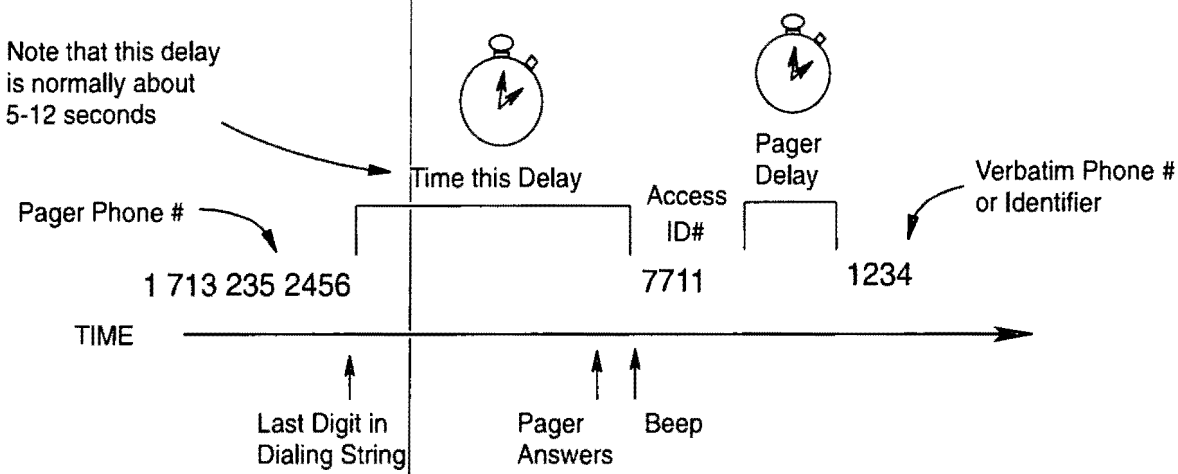

Cellularm Cellular Communications Diagram (AC Only)

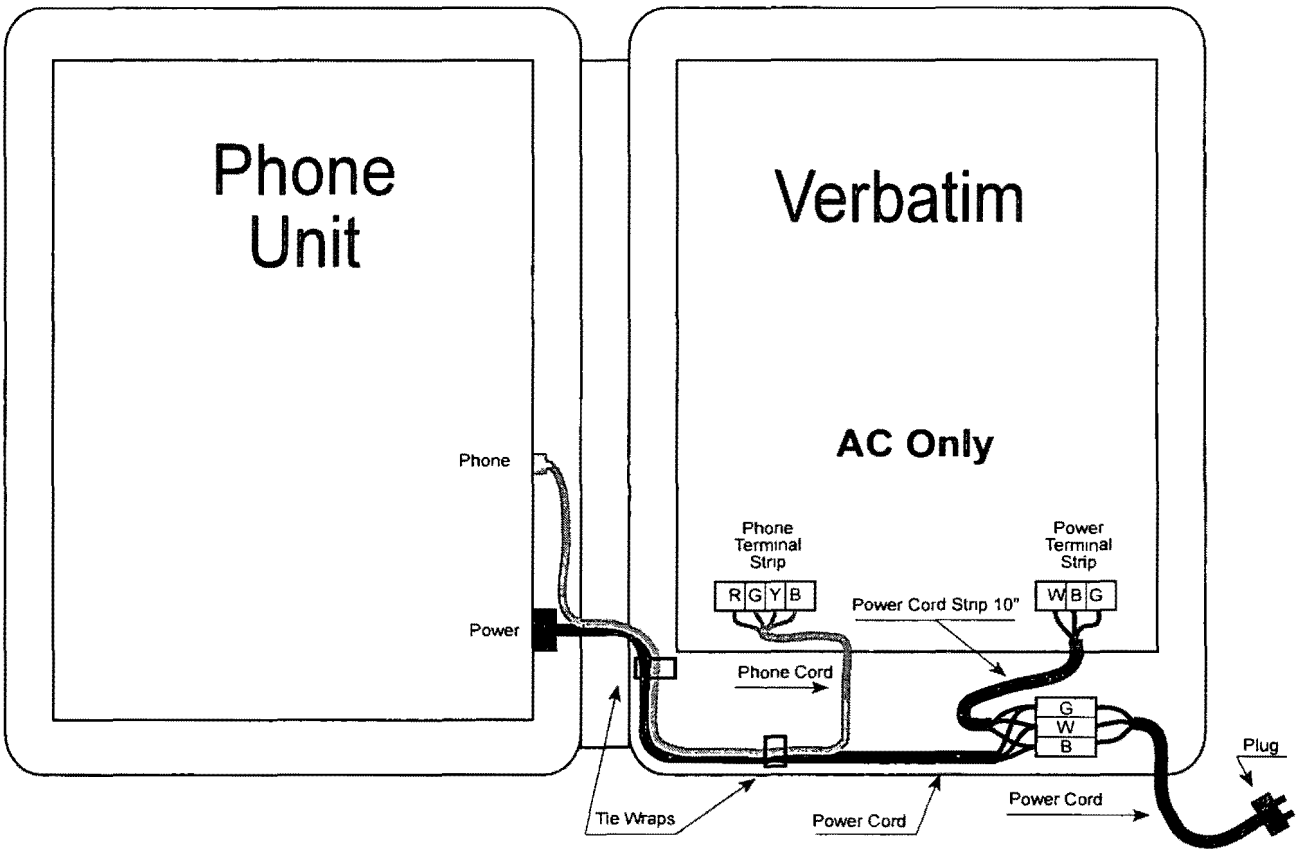

'ularm Cellular Communications Diagram (12V DC Only)

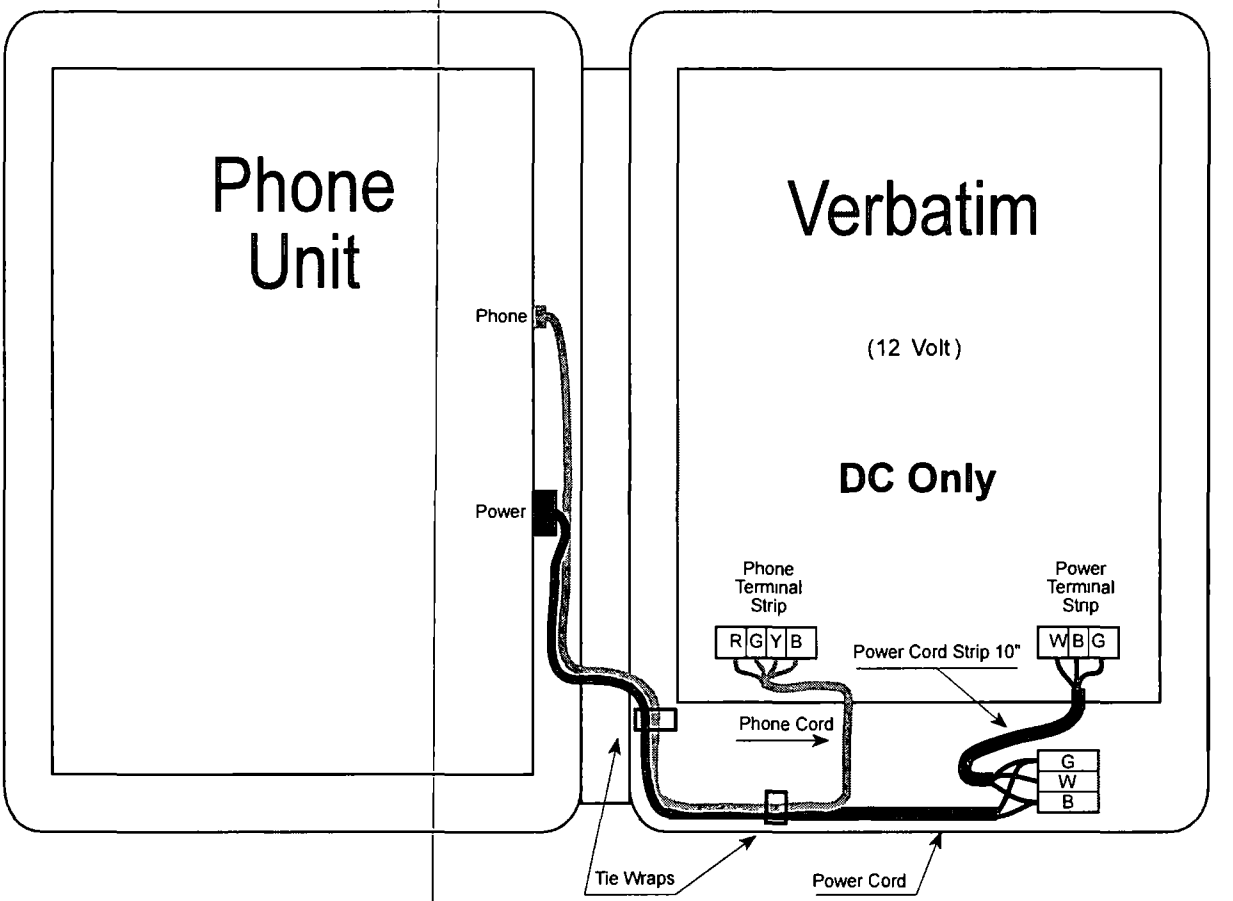

'ellularm Cellular Communications Diagram (24V DC Only)

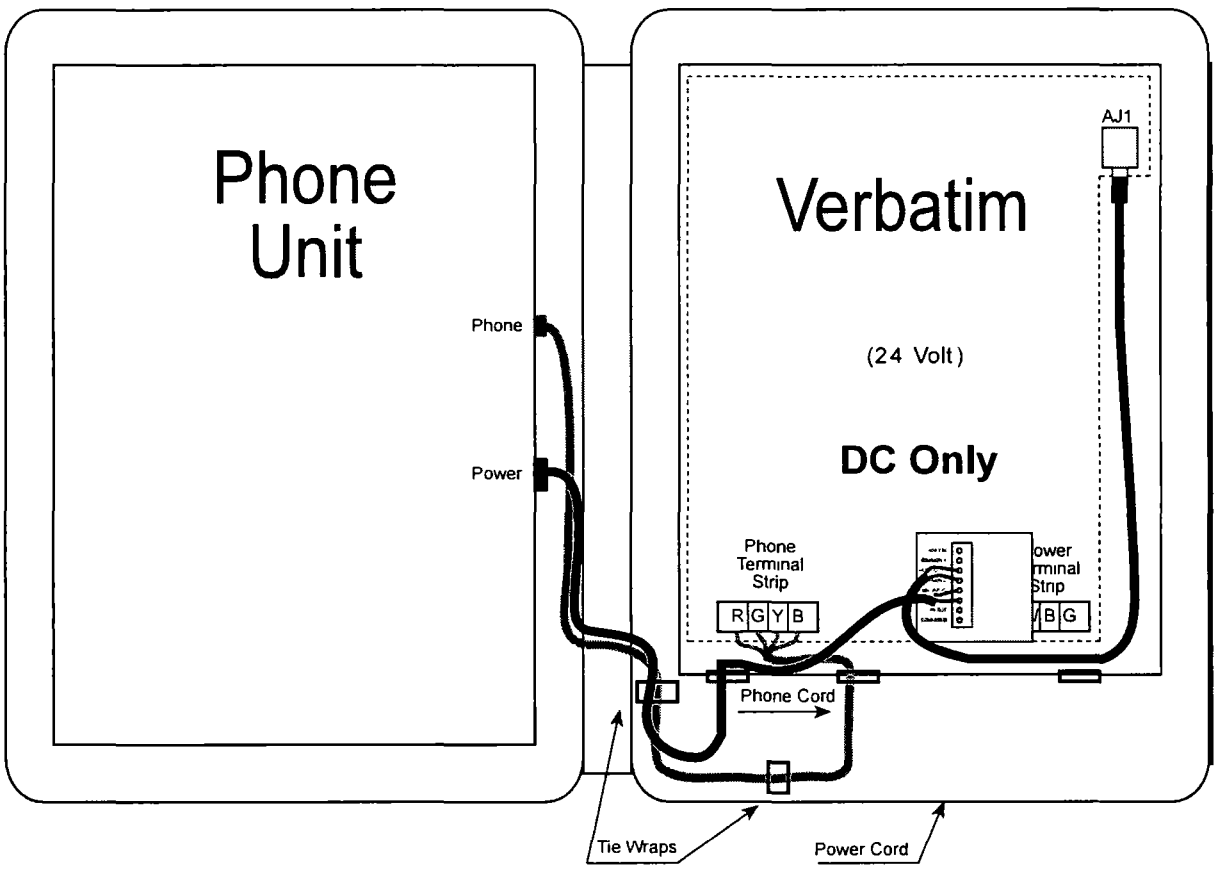

Verbatim Enclosure Diagram

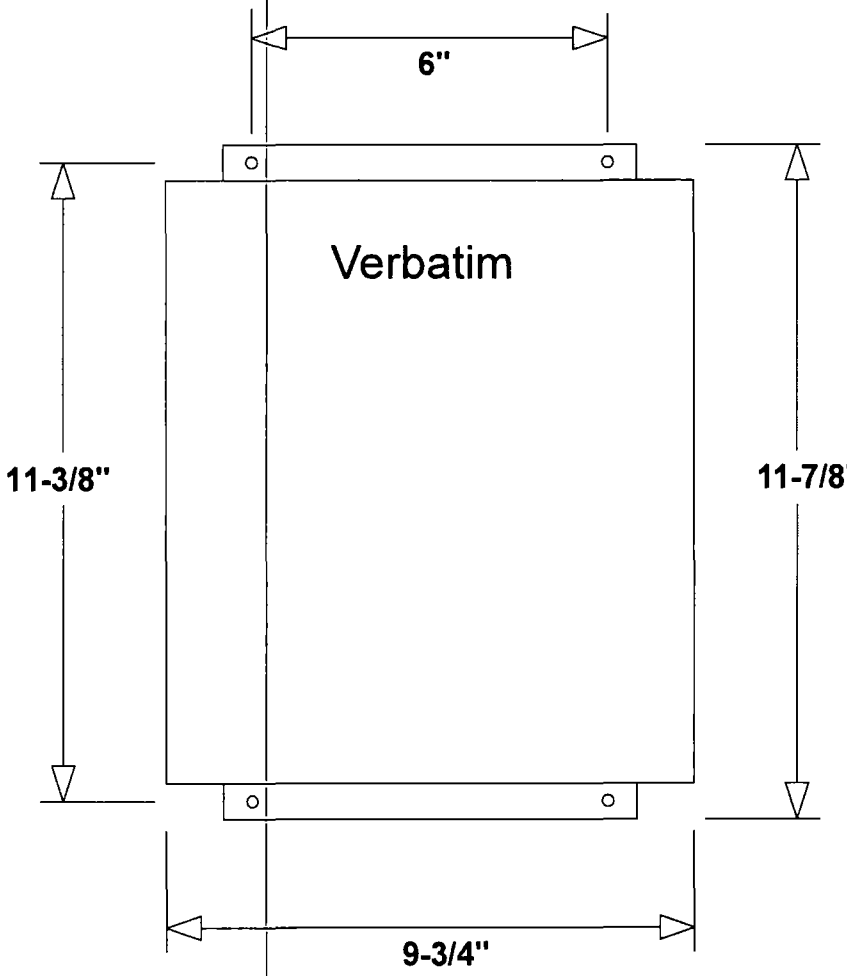

RECTANGULAR MOUNTING CENTERS: 6" W x 11-3/8" H
OVERALL DIMENSIONS: 9-3/4" W x 11 7/8" H x 5" D

re

NEMA 4X Enclosure Diagram

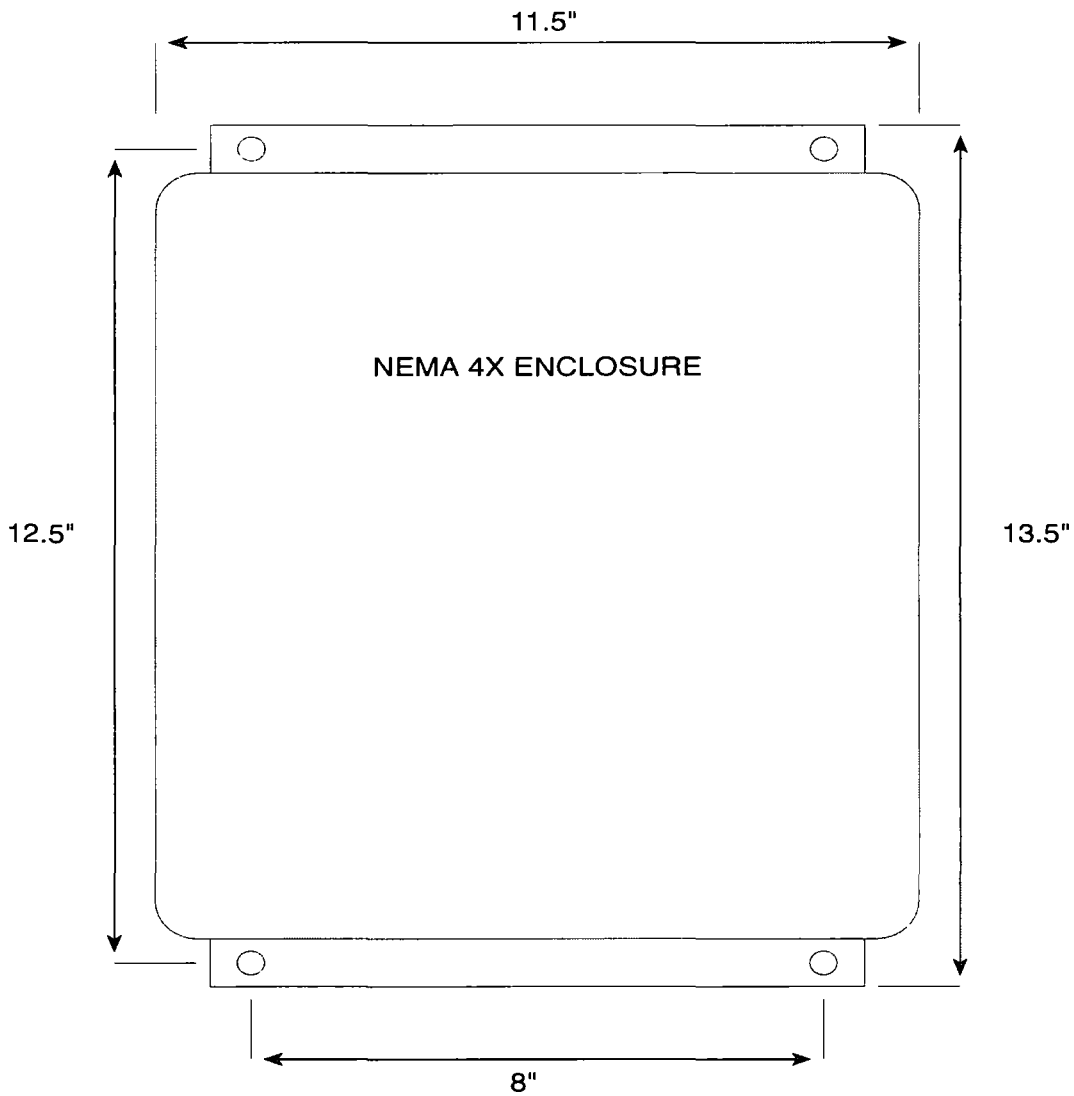

RECTANGULAR MOUNTING CENTERS: 8" W x 12.5" H
OVERALL DIMENSIONS 11.5" W x 13.5" H x 5.5" D

Motherboard Component Diagram

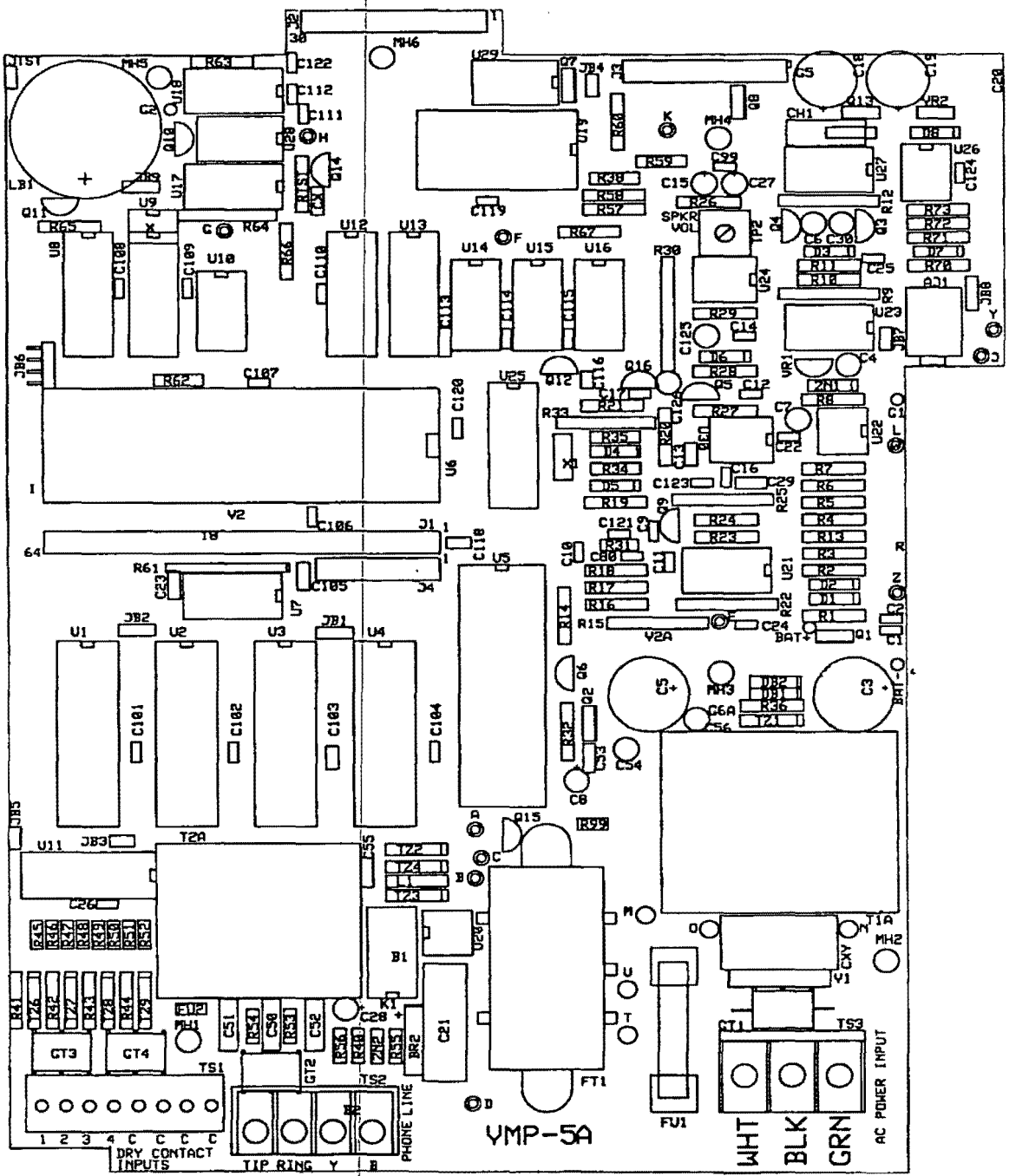

Jumper Block Diagram

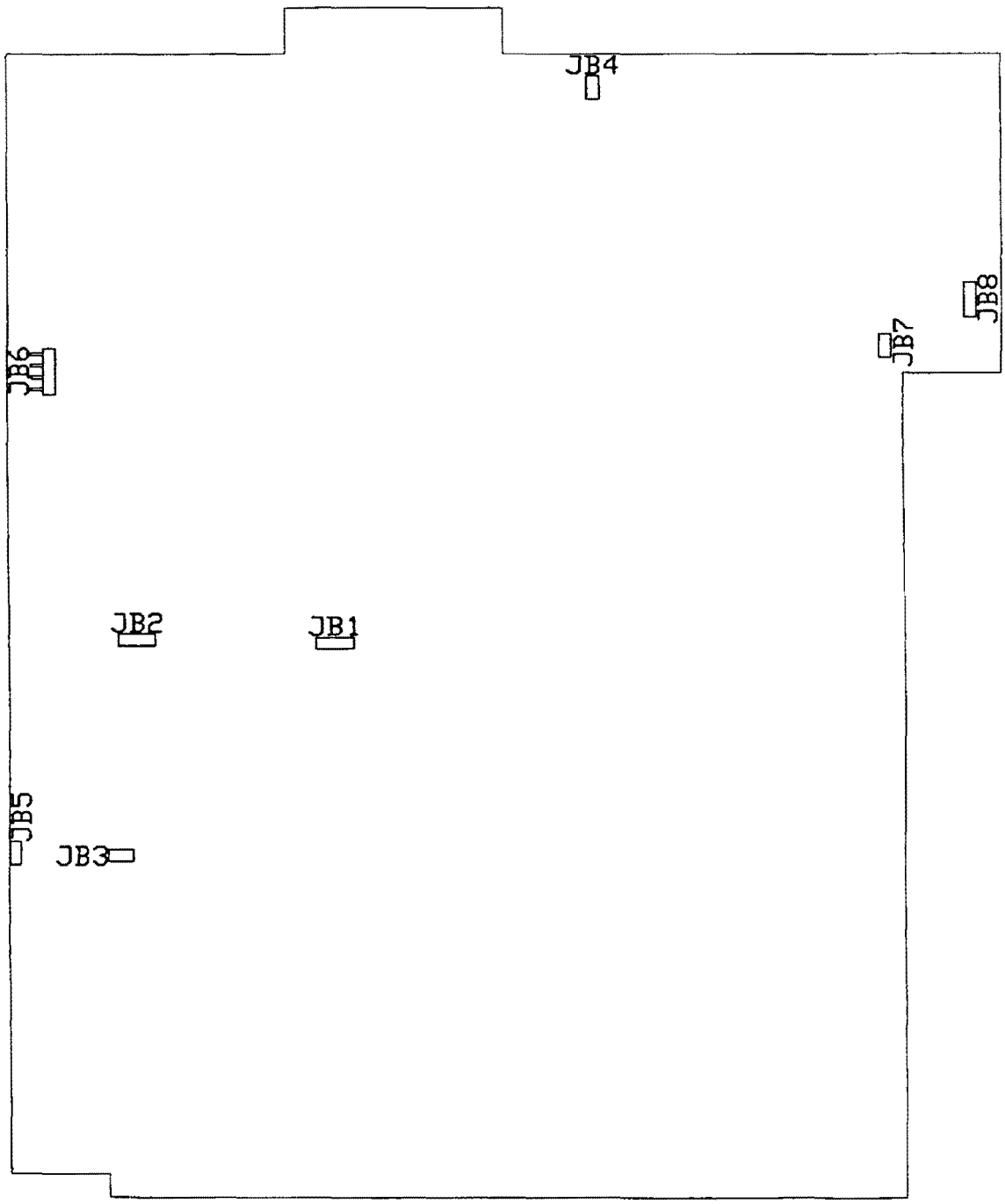

H.11 Jumper Configurations

Main Board VMP-5A

- JB1 - configures sockets U3 and U4 for the size of EPROM chip used.
  Placement of shorting block:
  - left hand two pins- 2 meg EPROMs (for future use)
  - right hand two pins- 1meg and 512k EPROMs (factory default)

- JB2 - configures sockets U1 and U2 for the size of RAM chip used.
  Placement of shorting block:
  - left hand two pins- 1 meg or 256k RAMs (factory default)
  - right hand two pins- 2 meg RAMs (for future use)

- JB3 - RESET. Short these two pins together for about 2 seconds (a screwdriver works fine) to clear the programming back to factory defaults.

- JB4 - Local Alarm Relay/ Line Seizure Relay output. Upper pin is ground, lower pin supplies 5vdc on alarm to activate the relay.

- JB5 - SYSTEM RESET. Short these two pins together for about two seconds to reset the system hardware.

- JB6 - factory use only

- JB7 - factory use only

- JB8 - configures jack AJ-1 to be either an audio output jack or a 12vdc power input jack.
  Placement of shorting block:
  - upper two pins makes AJ-1 an audio output jack, for using an external speaker or connecting to another audio system.
  - lower two pins makes AJ-1 a 12vdc power input jack for powering the unit from an external source.

- JB9 - factory use only

Speech Board VSPE-2

- JB101 - position of jumper varies with the firmware version
  Placement of shorting block:
  - left hand two pins if thc firmware version is 2.00 or higher. Speech RAM is to be placed in the board beginning with U103 then U104 and so on up to 8 RAM chips.
  - right hand two pins if the firmware version is 1.36 or below. A maximum of two speech RAM may be used. If using just one RAM chip, it goes in socket U104. A second one if used can go in U105 (U103 is skipped).

I Verbatim™ Series VSS Autodialer Specification

I.1 Description & Phone Number Dialing

The autodialer shall be a solid state component capable of dialing up to 16 phone numbers, each up to 60 digits in length. Phone numbers and Standard pulse dialing or Touch Tone DTMF dialing are user programmable via the system's keyboard or Touch Tone phone. Further, the autodialer shall be capable of connecting, via a single serial interface cable, to a variety of Programmable Logic Controllers (PLCs), Distributed Control Systems (DCSs) & SCADA systems. Serial interfacing methods shall incorporate commonly used standard industrial network protocols such as Modicon, Inc. Modbus RTU

I.2 Solid State Voice Message Recording and Playback

The unit shall have two different categories of speech message capability, all implemented with permanent non-volatile solid state circuitry with no mechanical tape mechanisms. The unit shall allow for message recording from a remote telephone as well as from the front panel.

I.2.1 User Field Recorded Messages

The user may record and re-record his own voice messages, for each input channel and for the Station ID.

1. *There shall be no limit on the length of any particular message*, within the overall available message recording time, which shall be 409 seconds for 36 total channel units and 624 seconds for 57 total or more channel units.
2. The unit shall allow selective recording of *both Normal and Alarm advisory messages* for each input channel.
3. The unit shall provide for *automatic setting of the optimum speech memory usage rate* for the total set of messages recorded, in order to achieve optimum recording sound quality.
4. Circuit board switches or jumper straps shall not be acceptable means of manipulating message length or recording rates.

I.2.2 Permanent Resident Non-Recorded Messages

Permanent built-in messages shall be included to support user programming operations, to provide supplemental warning messages such as advising that the alarms have been disabled, and to allow the unit to be fully functional even when the installer has not recorded any messages of his own.

I.3 Local & Remote Programming Capabilities

The user may optionally elect to alter the following parameters from their standard normal default values via keyboard entry or remotely from any Touch Tone phone.

Capability	Setting/Description
Alarm Call Grouping	On alarm, system shall selectively call the correct phone numbers according to the current alarm(s).
Alarm response delay	.1 to 9999.9 seconds.
Delay between alarm call outs	.1 to 99.9 minutes.
Alarm reset time:	0.1 to 99 hours or "NO RESET".
Incoming ring response (answer) delay	1 to 20 rings.
Input alarm criteria	Each channel shall be independently configured for "Normally Closed," "Normally Open," "No Alarm," or "Disabled."
Autocall Test	When enabled, the unit shall place a single round of test calls, both at the time this function is enabled and also at regular subsequent intervals until this function is disabled at the keyboard.
Run Time Meter	Selected physical channel inputs shall accumulate and report the number of hours that its input contacts have been closed.
Remote system microphone activation.	
Remote and local arming and disarming of system.	
Pulse Totalizer Function.	Selected physical input channels shall be capable of counting pulses of up to 100Hz. at 50% duty cycle.

I.4 Nonvolatile Program Memory Retention

User-entered programming and voice messages shall be kept intact even during power failures or when all power is removed for up to ten years.

I.5 Acknowledgment

Acknowledgment of an alarm phone call is to be accomplished by pressing a Touch Tone® "9" as the alarm call is being received, and/or by returning a phone call to the unit after having received an alarm call.

I.6 Remote (PLC) Channel Monitoring Function

The unit shall continuously scan all properly configured Remote Channels. The unit shall monitor remote channels which physically reside in other industrial equipment interfaced to the Verbatim via the serial interface. The unit shall be capable of interfacing to at least two PLC networks simultaneously. The unit shall be capable of monitoring any PLC data register regardless of register type, whether digital, analog, input, output or status point. Alarm criteria shall be settable according data register type. For digital remote channels, alarm criteria shall be settable for normally '0' or normally '1'. For analog remote channels, both a high setpoint and a low setpoint alarm criteria shall be settable. Violation of alarm criteria at any remote channel shall cause the unit to go into alarm state and begin dial-outs. All remote channel alarm criteria shall be settable either at the front panel of the unit of over the telephone using touch-tone commands. The unit shall be capable of writing data to any PLC data register to which writing data is a legal operation. The unit shall monitor any failure of the active serial communications channels. Upon failure of any communications channel the unit shall enter the alarm state and begin dial-outs. The unit shall be capable of transferring data between one remote channel on one serial communications network and another remote channel on a second serial communications network. The unit shall also be capable of transferring data between remote channels on a serial communications network and physical channels within the unit. The unit shall be optionally upgradable to incorporate provision for 32, 64 or 96 total remote channels.

I.7 Input Monitoring Function

The unit shall continuously monitor the presence of AC power and the status of four contact closure inputs. Unit shall optionally be field upgradeable to incorporate a total of 8, 16, 24, or 32 dry contact inputs. AC power failure, or violation of the alarm criteria at any input, shall cause the unit to go into alarm status and begin dial-outs. Unit shall, upon a single program entry, automatically accept all input states as the normal non-alarm state, eliminating possible confusion about Normally Open versus Normally Closed inputs. Further, as a diagnostic aid, unit shall have the capability of directly announcing the state of any given input as currently "Open Circuit" or "Closed Circuit," without disturbing any message programming. Each input channel shall also be independently programmable, *without need to manipulate circuit board switches or jumpers*, as Normally Open or Normally Closed, or for No Alarm (Status Only), or for Pulse Totalizing, or for Run Time Metering.

I.8 Run Time Meter Inputs

Any dry contact input can be programmed to accumulate and report the number of hours their respective input circuits have been closed. Any such channels will never cause an alarm, but on inquiry will recite the channel's message according to the status of the input and then report the closed circuit time to the tenth of an hour. The input will accumulate and report in tenths of hours up to a total accumulated running time of 99,999.9 hours. The initial value of the Run Time Meter shall be programmable in order to agree with existing electromechanical Run Time Meters. Up to a total of 8 Run Time Meters may be programmed.

I.9 Pulse Totalizer Inputs

Any dry contact input can be programmed to accumulate the number of pulses (momentary contact closures) occurring at the input. The maximum input pulse rate must not exceed 100 pulses per second, and if the rate is over 50 pulses per second, the pulses must have a 50% duty cycle. The user shall be able to program an initial starting value and a scale factor for each pulse totalizer input. The pulse totalizer input shall cause an alarm call upon reaching a user defined alarm setpoint.

I.10 Alarm Message

Upon initiating an alarm phone call, the system is to "speak" only those channels that are currently in "alarm status".

I.11 Communications Protocol

The unit shall interface to standard networks commonly used in industrial installations. The unit shall be capable of network communications using the Modbus RTU protocol.

I.12 Diagnostics

The unit shall include user commands to execute diagnostics of the PLC network to determine the health of the network. The unit shall inform the user of the length of scan time for the set of all configured remote channels. The unit shall provide a complete verbal report of all programmable functions and their programmed values on command form any remote Touch Tone phone.

I.13 Speakerphone

The unit shall be capable of dialing any phone number on command and function as a speakerphone.

I.14 Inquiry Message and Function

Inquiry phone calls can be made directly to the unit at any time from any telephone, locally or long distance, for a complete status report of all variables being monitored, including power status.

I.15 Power Battery Backup

Normal power shall be 105-135 VAC, 15 watts nominal. The product is to contain its own gel cell rechargeable battery which is automatically kept charged when AC power is present. The system shall operate on battery power for a minimum of 13 continuous hours in the event of AC power failure. A shorter backup time shall not be acceptable. The built-in charger shall be precision voltage controlled, not a "trickle charger," in order to minimize recharge time and maximize battery life available.

I.16 Phone Line

The autodialer is to use a standard rotary pulse or Touch Tone "dial-up" phone line (direct leased line not to be required) and is to be F.C.C. approved. Connection to the telephone is through a 4-pin modular jack (RJ-11).

the main circuit board shall not be an acceptable substitute. The installer shall provide a good electrical ground connection point near the unit to maximize the effectiveness of the surge protection.

I.17 Local Data Logging

The system shall include a parallel printer interface for local data logging. The local printer will automatically print out, with date and time stamp, each activity that occurs; alarms, acknowledgements, programming entries, inquiry calls, etc.. For the purpose of easy program review the user shall be able to printout on demand all user entered programming.

I.18 Public Address Broadcast

The standard dialer shall provide a mini phone jack for optional connection to a local public address system. If connected to the PA system the dialer shall broadcast all alarm messages over the PA system and the telephone simultaneously.

I.19 Integral Surge Protection

All power, phone line, dry contact, and analog signal inputs shall be protected at the circuit board to IEEE Standard 587, category B (6,000 volts open circuit/ 3,000 amps closed circuit). Gas tubes followed by solid state protectors shall be integral to the circuit board for each such line. Protectors mounted external to the main circuit board shall not be an acceptable substitute. The installer shall provide a good electrical ground connection point near the unit to maximize the effectiveness of the surge protection.

I.20 Warranty

The dialer shall be covered by a five (5) year warranty covering parts and labor performed at the Factory.

I.21 Modular Upgrades

The system shall include expansion connectors to accommodate field upgrades for additional internal dry contact inputs, remote supervisory control outputs, and internal analog inputs, CDL, SCADA.

I.22 Additional Features: Sealed Switches, LED Indicators, Alarm Disable Warning, TalkThrough

All keyboard and front panel switches shall be sealed to prevent contamination. Front panel LED's shall indicate: Normal Operation, Program Mode, Phone Call in Progress, Status for each channel, AC Power Present, AC Power Failure, and Low, Discharging or Recharging Battery. On any Inquiry telephone call or On Site status check, the voice shall provide specific warning if no dialout phone numbers are entered, or if the unit is in the "alarm disable" mode, or if AC power is off or has been off since last reset. A built-in microphone shall allow anyone at a remote phone to listen to local sounds and have a two-way conversation with personnel at the dialer.

I.23 Special Order Items

The following options shall be available on specific order:

a) 4, 12, 20, or 28 extra contact channels (8,16,24, or 32 respectively, total.)

b) 32, 64, 96 remote channels

c) 1, 4, 8, or 16 analog channels.

d) Remote supervisory control (4 or 8 outputs).

e) Cellular telephone communications.

f) Radio communications interface.

g) NEMA 4X (sealed) enclosure.

h) Thermostatically controlled heater.

Specifications subject to change without notice.

J Worksheets

Worksheet A Programming

Part 1: Phone Number Programming

2-Digit Phone Number Designation	Use Program Code	Phone Number (Including any necessary prefixes or area codes)	Person
01 (First)	701		
02 (Second)	702		
03 (Third)	703		
04 (Fourth)	704		
05 (Fifth)	705		
06 (Sixth)	706		
07 (Seventh)	707		
08 (Eighth)	708		
09 (Ninth)	709		
10 (Tenth)	710		
11 (Eleventh)	711		
12 (Twelfth)	712		
13 (Thirteenth)	713		
14 (Fourteenth)	714		
15 (Fifteenth)	715		
16 (Sixteenth)	716		

Part 2: Optional Programing

Record of any optional programming to alter selected parameters from their normal default values. *(Sample highlighted)*

Program Code	Parameter Description	Default Value	Write In Any Altered Values YouProgram
902	*Alarm Trip Delay*	*2 seconds*	*40 seconds*

Worksheet B Alarm Call Grouping Programming

Purpose: To "link" certain input channels to call only selected phone numbers.
See Section 6.2.13

Part 1: Group Description Naming

As an organizational step, write in a Group Description Name (Electrical, Security, etc.) for each of your phone number groups, and the two-digit designation number of the phone numbers you want included in each group. Refer to the filled-in example below. This should be done only after you have already entered your entire list of up to 16 phone numbers on Worksheet A. (*Sample highlighted*)

Group Description (Electrical, etc.)	2-Digit Phone # Designation (Taken from Worksheet A)
Maintenance	***01, 04, 05, 06***
Electrical	***03, 04***
Security	***02, 05***

Worksheet B Alarm Call Grouping Programming Cont. . .

Part 2: Linking Channels To Groups

For each input channel that you wish to have "linked" to one of your groups, write in your chosen Group Description Name (Electrical, etc.), and the corresponding set of 2-digit Phone Number Designations which you established above. Finally, write in these same sets of 2-digit codes, without the separating commas, to the right of the printed program code (501, etc.). This establishes the complete program code to enter for each channel that you want "linked" to call only a selected group of phone numbers. (*Sample highlighted*)

The filled-in sample, below, is for an 8-channel unit. Three groups were established, and 5 of the channels were linked to a group. The remaining 3 channels were not linked to any group, and therefore, those 3 "unlinked" channels would dial the entire list of phone numbers in regular order.

Note:

Any channels that you do not enter such a program code for, will cause dialing of the entire list of phone numbers, when that channel goes into alarm.

Channel	Linked to Group	Corresp. Phone # Desig's Est. Above	Program Code to Enter
01	*Security*	*02, 05*	*501 9 02 05*
02	*Security*	*02, 05*	*502 9 02 05*
03	*Electrical*	*03, 04*	*503 9 03 04*
04	*Maintenance*	*01, 04, 05, 06*	*504 9 01 04 05 06*
05	____	____	~~*505 9*~~
06	*Electrical*	*03, 04*	*506 9 03 04*
07	____	____	~~*507 9*~~
08	____	____	~~*508 9*~~

Worksheet B Alarm Call Grouping Programming Cont. . .

(Page 1 of 6)

Internal Input Channels	Linked to Group	Corresp. Phone # Desig's Est. Above	Program Code to Enter
01			*501 9*
02			*502 9*
03			*503 9*
04			*504 9*
05			*505 9*
06			*506 9*
07			*507 9*
08			*508 9*
09			*509 9*
10			*510 9*
11			*511 9*
12			*512 9*
13			*513 9*
14			*514 9*
15			*515 9*
16			*516 9*
17			*517 9*
18			*518 9*
19			*519 9*
20			*520 9*
21			*521 9*
22			*522 9*
23			*523 9*
24			*524 9*

Worksheet B Alarm Call Grouping Programming Cont. . .

(Page 2 of 6)

Internal Input Channels	Linked to Group	Corresp. Phone # Desig's Est. Above	Program Code to Enter
25			*525 9*
26			*526 9*
27			*527 9*
28			*528 9*
29			*529 9*
30			*530 9*
31			*531 9*
32			*532 9*
33			*533 9*
34			*534 9*
35			*535 9*
36			*536 9*
37			*537 9*
38			*538 9*
39			*539 9*
40			*540 9*
41			*541 9*
42			*542 9*
43			*543 9*
44			*544 9*
45			*545 9*
46			*546 9*
47			*547 9*
48			*548 9*

Worksheet B Alarm Call Grouping Programming Cont. . .

(Page 3 of 6)

Remote Channels	Linked to Group	Corresp. Phone # Desig's Est. Above	Program Code to Enter
01			*4501 9*
02			*4502 9*
03			*4503 9*
04			*4504 9*
05			*4505 9*
06			*4506 9*
07			*4507 9*
08			*4508 9*
09			*4509 9*
10			*4510 9*
11			*4511 9*
12			*4512 9*
13			*4513 9*
14			*4514 9*
15			*4515 9*
16			*4516 9*
17			*4517 9*
18			*4518 9*
19			*4519 9*
20			*4520 9*
21			*4521 9*
22			*4522 9*
23			*4523 9*
24			*4524 9*

Worksheet B Alarm Call Grouping Programming Cont. . .

(Page 4 of 6)

Remote Channels	Linked to Group	Corresp. Phone # Desig's Est. Above	Program Code to Enter
25			*4525 9*
26			*4526 9*
27			*4527 9*
28			*4528 9*
29			*4529 9*
30			*4530 9*
31			*4531 9*
32			*4532 9*
33			*4533 9*
34			*4534 9*
35			*4535 9*
36			*4536 9*
37			*4537 9*
38			*4538 9*
39			*4539 9*
40			*4540 9*
41			*4541 9*
42			*4542 9*
43			*4543 9*
44			*4544 9*
45			*4545 9*
46			*4546 9*
47			*4547 9*
48			*4548 9*

Worksheet B Alarm Call Grouping Programming Cont. . .

(Page 5 of 6)

Remote Channels	Linked to Group	Corresp. Phone # Desig's Est. Above	Program Code to Enter
49			*4549 9*
50			*4550 9*
51			*4551 9*
52			*4552 9*
53			*4553 9*
54			*4554 9*
55			*4555 9*
56			*4556 9*
57			*4557 9*
58			*4558 9*
59			*4559 9*
60			*4560 9*
61			*4561 9*
62			*4562 9*
63			*4563 9*
64			*4564 9*
65			*4565 9*
66			*4566 9*
67			*4567 9*
68			*4568 9*
69			*4569 9*
70			*4570 9*
71			*4571 9*
72			*4572 9*

Worksheet B Alarm Call Grouping Programming Cont. . .

(Page 6 of 6)

Remote Channels	Linked to Group	Corresp. Phone # Desig's Est. Above	Program Code to Enter
73			*4573 9*
74			*4574 9*
75			*4575 9*
76			*4576 9*
77			*4577 9*
78			*4578 9*
79			*4579 9*
80			*4580 9*
81			*4581 9*
82			*4582 9*
83			*4583 9*
84			*4584 9*
85			*4585 9*
86			*4586 9*
87			*4587 9*
88			*4588 9*
89			*4589 9*
90			*4590 9*
91			*4591 9*
92			*4592 9*
93			*4593 9*
94			*4594 9*
95			*4595 9*
96			*4596 9*

Worksheet C Message Planning & Recording *(Page 1 of 11)*

Input Channel Message Designation	Program Code	Message Content	Approx. Length
Station ID	*100*		
Ch 01 Alarm	*101*		
Ch 01 Normal	*201*		
Ch 02 Alarm	*102*		
Ch 02 Normal	*202*		
Ch 03 Alarm	*103*		
Ch 03 Normal	*203*		
Ch 04 Alarm	*104*		
Ch 04 Normal	*204*		
Ch 05 Alarm	*105*		
Ch 05 Normal	*205*		
Ch 06 Alarm	*106*		
Ch 06 Normal	*206*		
Ch 07 Alarm	*107*		
Ch 07 Normal	*207*		
Ch 08 Alarm	*108*		
Ch 08 Normal	*208*		
Ch 09 Alarm	*109*		
Ch 09 Normal	*209*		
Ch 10 Alarm	*110*		
Ch 10 Normal	*210*		
Ch 11 Alarm	*111*		
Ch 11 Normal	*211*		
Ch 12 Alarm	*112*		
Ch 12 Normal	*212*		
Ch 13 Alarm	*113*		
Ch 13 Normal	*213*		
Ch 14 Alarm	*114*		
Ch 14 Normal	*214*		

Total estimated recorded message length in seconds, this page _____

Worksheet C Message Planning & Recording *(Page 2 of 11)*

Input Channel Message Designation	Program Code	Message Content	Approx. Length
Ch 15 Alarm	*115*		
Ch 15 Normal	*215*		
Ch 16 Alarm	*116*		
Ch 16 Normal	*216*		
Ch 17 Alarm	*117*		
Ch 17 Normal	*217*		
Ch 18 Alarm	*118*		
Ch 18 Normal	*218*		
Ch 19 Alarm	*119*		
Ch 19 Normal	*219*		
Ch 20 Alarm	*120*		
Ch 20 Normal	*220*		
Ch 21 Alarm	*121*		
Ch 21 Normal	*221*		
Ch 22 Alarm	*122*		
Ch 22 Normal	*222*		
Ch 23 Alarm	*123*		
Ch 23 Normal	*223*		
Ch 24 Alarm	*124*		
Ch 24 Normal	*224*		
Ch 25 Alarm	*125*		
Ch 25 Normal	*225*		
Ch 26 Alarm	*126*		
Ch 26 Normal	*226*		
Ch 27 Alarm	*127*		
Ch 27 Normal	*227*		
Ch 28 Alarm	*128*		
Ch 28 Normal	*228*		

Total estimated recorded message length in seconds, this page _____

Worksheet C Message Planning & Recording *(Page 3 of 11)*

Input Channel Message Designation	Program Code	Message Content	Approx. Length
Ch 29 Alarm	*129*		
Ch 29 Normal	*229*		
Ch 30 Alarm	*130*		
Ch 30 Normal	*230*		
Ch 31 Alarm	*131*		
Ch 31 Normal	*231*		
Ch 32 Alarm	*132*		
Ch 32 Normal	*232*		
Ch 33 Alarm	*133*		
Ch 33 Normal	*233*		
Ch 34 Alarm	*134*		
Ch 34 Normal	*234*		
Ch 35 Alarm	*135*		
Ch 35 Normal	*235*		
Ch 36 Alarm	*136*		
Ch 36 Normal	*236*		
Ch 37 Alarm	*137*		
Ch 37 Normal	*237*		
Ch 38 Alarm	*138*		
Ch 38 Normal	*238*		
Ch 39 Alarm	*139*		
Ch 39 Normal	*239*		
Ch 40 Alarm	*140*		
Ch 40 Normal	*240*		
Ch 41 Alarm	*141*		
Ch 41 Normal	*241*		
Ch 42 Alarm	*142*		
Ch 42 Normal	*242*		

Total estimated recorded message length in seconds, this page _____

Worksheet C Message Planning & Recording *(Page 4 of 11)*

Input Channel Message Designation	Program Code	Message Content	Approx. Length
Ch 43 Alarm	*143*		
Ch 43 Normal	*243*		
Ch 44 Alarm	*144*		
Ch 44 Normal	*244*		
Ch 45 Alarm	*145*		
Ch 45 Normal	*245*		
Ch 46 Alarm	*146*		
Ch 46 Normal	*246*		
Ch 47 Alarm	*147*		
Ch 47 Normal	*247*		
Ch 48 Alarm	*148*		
Ch 48 Normal	*248*		
Remote Channel Message Designation	**Program Code**	**Message Content**	**Approx. Length**
NET 1 ID	*41001*		
Ch 01 Alarm	*4101*		
Ch 01 Normal	*4201*		
Ch 02 Alarm	*4102*		
Ch 02 Normal	*4202*		
Ch 03 Alarm	*4103*		
Ch 03 Normal	*4203*		
Ch 04 Alarm	*4104*		
Ch 04 Normal	*4204*		

Total estimated recorded message length in seconds, this page _____

Worksheet C Message Planning & Recording *(Page 5 of 11)*

Remote Channel Message Designation	Program Code	Message Content	Approx. Length
Ch 05 Alarm	***4105***		
Ch 05 Normal	***4205***		
Ch 06 Alarm	***4106***		
Ch 06 Normal	***4206***		
Ch 07 Alarm	***4107***		
Ch 07 Normal	***4207***		
Ch 08 Alarm	***4108***		
Ch 08 Normal	***4208***		
Ch 09 Alarm	***4109***		
Ch 09 Normal	***4209***		
Ch 10 Alarm	***4110***		
Ch 10 Normal	***4210***		
Ch 11 Alarm	***4111***		
Ch 11 Normal	***4211***		
Ch 12 Alarm	***4112***		
Ch 12 Normal	***4212***		
Ch 13 Alarm	***4113***		
Ch 13 Normal	***4213***		
Ch 14 Alarm	***4114***		
Ch 14 Normal	***4214***		
Ch 15 Alarm	***4115***		
Ch 15 Normal	***4215***		
Ch 16 Alarm	***4116***		
Ch 16 Normal	***4216***		
Ch 17 Alarm	***4117***		
Ch 17 Normal	***4217***		

Total estimated recorded message length in seconds, this page _____

Worksheet C Message Planning & Recording *(Page 6 of 11)*

Remote Channel Message Designation	Program Code	Message Content	Approx. Length
Ch 18 Alarm	***4118***		
Ch 18 Normal	***4218***		
Ch 19 Alarm	***4119***		
Ch 19 Normal	***4219***		
Ch 20 Alarm	***4120***		
Ch 20 Normal	***4220***		
Ch 21 Alarm	***4121***		
Ch 21 Normal	***4221***		
Ch 22 Alarm	***4122***		
Ch 22 Normal	***4222***		
Ch 23 Alarm	***4123***		
Ch 23 Normal	***4223***		
Ch 24 Alarm	***4124***		
Ch 24 Normal	***4224***		
Ch 25 Alarm	***4125***		
Ch 25 Normal	***4225***		
Ch 26 Alarm	***4126***		
Ch 26 Normal	***4226***		
Ch 27 Alarm	***4127***		
Ch 27 Normal	***4227***		
Ch 28 Alarm	***4128***		
Ch 28 Normal	***4228***		
Ch 29 Alarm	***4129***		
Ch 29 Normal	***4229***		
Ch 30 Alarm	***4130***		
Ch 30 Normal	***4230***		

Total estimated recorded message length in seconds, this page _____

Worksheet C Message Planning & Recording *(Page 7 of 11)*

Remote Channel Message Designation	Program Code	Message Content	Approx. Length
Ch 31 Alarm	*4131*		
Ch 31 Normal	*4231*		
Ch 32 Alarm	*4132*		
Ch 32 Normal	*4232*		
Ch 33 Alarm	*4133*		
Ch 33 Normal	*4233*		
Ch 34 Alarm	*4134*		
Ch 34 Normal	*4234*		
Ch 35 Alarm	*4135*		
Ch 35 Normal	*4235*		
Ch 36 Alarm	*4136*		
Ch 36 Normal	*4236*		
Ch 37 Alarm	*4137*		
Ch 37 Normal	*4237*		
Ch 38 Alarm	*4138*		
Ch 38 Normal	*4238*		
Ch 39 Alarm	*4139*		
Ch 39 Normal	*4239*		
Ch 40 Alarm	*4140*		
Ch 40 Normal	*4240*		
Ch 41 Alarm	*4141*		
Ch 41 Normal	*4241*		
Ch 42 Alarm	*4142*		
Ch 42 Normal	*4242*		
Ch 43 Alarm	*4143*		
Ch 43 Normal	*4243*		
Ch 44 Alarm	*4144*		
Ch 44 Normal	*4244*		
Ch 45 Alarm	*4145*		
Ch 45 Normal	*4245*		

Total estimated recorded message length in seconds, this page _____

Worksheet C Message Planning & Recording *(Page 8 of 11)*

Remote Channel Message Designation	Program Code	Message Content	Approx. Length
Ch 46 Alarm	***4146***		
Ch 46 Normal	***4246***		
Ch 47 Alarm	***4147***		
Ch 47 Normal	***4247***		
Ch 48 Alarm	***4148***		
Ch 48 Normal	***4248***		
Ch 49 Alarm	***4149***		
Ch 49 Normal	***4249***		
Ch 50 Alarm	***4150***		
Ch 50 Normal	***4250***		
Ch 51 Alarm	***4151***		
Ch 51 Normal	***4251***		
Ch 52 Alarm	***4152***		
Ch 52 Normal	***4252***		
Ch 53 Alarm	***4153***		
Ch 53 Normal	***4253***		
Ch 54 Alarm	***4154***		
Ch 54 Normal	***4254***		
Ch 55 Alarm	***4155***		
Ch 55 Normal	***4255***		
Ch 56 Alarm	***4156***		
Ch 56 Normal	***4256***		
Ch 57 Alarm	***4157***		
Ch 57 Normal	***4257***		
Ch 58 Alarm	***4158***		
Ch 58 Normal	***4258***		

Total estimated recorded message length in seconds, this page _____

Worksheet C Message Planning & Recording *(Page 9 of 11)*

Remote Channel Message Designation	Program Code	Message Content	Approx. Length
Ch 59 Alarm	***4159***		
Ch 59 Normal	***4259***		
Ch 60 Alarm	***4160***		
Ch 60 Normal	***4260***		
Ch 61 Alarm	***4161***		
Ch 61 Normal	***4261***		
Ch 62 Alarm	***4162***		
Ch 62 Normal	***4262***		
Ch 63 Alarm	***4163***		
Ch 63 Normal	***4263***		
Ch 64 Alarm	***4164***		
Ch 64 Normal	***4264***		
Ch 65 Alarm	***4165***		
Ch 65 Normal	***4265***		
Ch 66 Alarm	***4166***		
Ch 66 Normal	***4266***		
Ch 67 Alarm	***4167***		
Ch 67 Normal	***4267***		
Ch 68 Alarm	***4168***		
Ch 68 Normal	***4268***		
Ch 69 Alarm	***4169***		
Ch 69 Normal	***4269***		
Ch 70 Alarm	***4170***		
Ch 70 Normal	***4270***		
Ch 71 Alarm	***4171***		
Ch 71 Normal	***4271***		

Total estimated recorded message length in seconds, this page _____

Worksheet C Message Planning & Recording *(Page 10 of 11)*

Remote Channel Message Designation	Program Code	Message Content	Approx. Length
Ch 72 Alarm	***4172***		
Ch 72 Normal	***4272***		
Ch 73 Alarm	***4173***		
Ch 73 Normal	***4273***		
Ch 74 Alarm	***4174***		
Ch 74 Normal	***4274***		
Ch 75 Alarm	***4175***		
Ch 75 Normal	***4275***		
Ch 76 Alarm	***4176***		
Ch 76 Normal	***4276***		
Ch 77 Alarm	***4177***		
Ch 77 Normal	***4277***		
Ch 78 Alarm	***4178***		
Ch 78 Normal	***4278***		
Ch 79 Alarm	***4179***		
Ch 79 Normal	***4279***		
Ch 80 Alarm	***4180***		
Ch 80 Normal	***4280***		
Ch 81 Alarm	***4181***		
Ch 81 Normal	***4281***		
Ch 82 Alarm	***4182***		
Ch 82 Normal	***4282***		
Ch 83 Alarm	***4183***		
Ch 83 Normal	***4283***		
Ch 84 Alarm	***4184***		
Ch 84 Normal	***4284***		

Total estimated recorded message length in seconds, this page _____

Worksheet C Message Planning & Recording *(Page 11 of 11)*

Remote Channel Message Designation	Program Code	Message Content	Approx. Length
Ch 85 Alarm	*4185*		
Ch 85 Normal	*4285*		
Ch 86Alarm	*4186*		
Ch 86 Normal	*4286*		
Ch 87 Alarm	*4187*		
Ch 87 Normal	*4287*		
Ch 88 Alarm	*4188*		
Ch 88 Normal	*4288*		
Ch 89 Alarm	*4189*		
Ch 89 Normal	*4289*		
Ch 90 Alarm	*4190*		
Ch 90 Normal	*4290*		
Ch 91 Alarm	*4191*		
Ch 91 Normal	*4291*		
Ch 92 Alarm	*4192*		
Ch 92 Normal	*4292*		
Ch 93 Alarm	*4193*		
Ch 93 Normal	*4293*		
Ch 94 Alarm	*4194*		
Ch 94 Normal	*4294*		
Ch 95 Alarm	*4195*		
Ch 95 Normal	*4295*		
Ch 96 Alarm	*4196*		
Ch 96 Normal	*4296*		

Total estimated recorded message length in seconds, this page _____

See next page to complete calculations

Worksheet C Message Planning & Recording Calculations:

Total estimated recorded message length in seconds, page 11 of 11 _____
Total estimated recorded message length in seconds, page 10 of 11 _____
Total estimated recorded message length in seconds, page 9 of 11 _____
Total estimated recorded message length in seconds, page 8 of 11 _____
Total estimated recorded message length in seconds, page 7 of 11 _____
Total estimated recorded message length in seconds, page 6 of 11 _____
Total estimated recorded message length in seconds, page 5 of 11 _____
Total estimated recorded message length in seconds, page 4 of 11 _____
Total estimated recorded message length in seconds, page 3 of 11 _____
Total estimated recorded message length in seconds, page 2 of 11 _____
Total estimated recorded message length in seconds, page 1 of 11 _____

Total estimated recorded message length in seconds, **all** pages _____
See Code 912 for alternate method of timing spoken messages.

Note:

For any channels that you have programmed for Status Report Only or for Run Time Metering, the message to be spoken on Open Circuit input is recorded with the Program Code ordinarily used for the Alarm Message; the message to be spoken on Closed Circuit input is recorded with the program code ordinarily used for the Normal Message.

K Annunciator Sequences and Options

This appendix discusses Verbatim operations in the context of the *ANSI/ISA-S18.1 Annunciator Sequences and Specifications* standard. It also describes the options available for configuring the Verbatim to support a variety of sequence models. This information will be useful for users needing calling sequences different from the one discussed in Section 5.

Note that the ANSI specification uses slightly different terminology from that used here and elsewhere in this manual. Hopefully, this won't cause much confusion.

One concept central to this discussion is that of *channel state*. At any given time every armed channel is in one of the following 5 states: *normal, alarm, acknowledged alarm, return to normal (RTN), acknowledged RTN*. The precise meaning of these terms will be clarified later on.

The term *annunciator state* is used here to describe the actions and indications of the Verbatim . These include LED illumination,voice reporting and status logging.

An *annunciator sequence* consists of specifying how transitions between the channel states occur and how they impact the annunciator state. The Verbatim supports three distinct types of annunciator sequences. These are each discussed in the subsections below. The next several paragraphs discuss the properties they all share in common.

The normal, alarm and RTN states are determined by comparing the channel's value with the criteria settings. A transition into these states requires that the condition persist for a time period referred to as the *alarm trip delay*. This provides hysteresis, or debouncing between the real-world signals and the channel state.

The two acknowledged states are determined by operator actions. Unacknowledged alarms and RTNs transit to the acknowledged states by pressing keys on the front panel or entering DTMF tones over the phone.

The Verbatim gives visual indications for the state of each channel or group of channels. If normal, the LED is OFF. When alarmed, the LED is blinking. When acknowledged the LED is steady ON. The visual indications for the RTN states are sequence dependent, and described later.

Audible indications for the channel states are also given. These take the form of voice reports either from the speaker or over the phone. These reports may be requested at any time by pressing the CHECK STATUS key, or phoning the unit.

Whenever any channel is in the unacknowledged alarm or RTN state, the Verbatim will solicit acknowledgment by phoning personel. The calling sequence itself is determined by the alarm call grouping and alarm ready scheduling configuration.

All audible indications can be silenced by pressing the ARM/DISARM key on the front panel. This action will also always acknowledge all unacknowledged conditions. Also, all annunciator state transitions and actions are suspended whenever the box is in program mode. Channel state transitions will still occur.

The annunciator state may at any time be completely reset by pressing the ARM/DISARM key twice. This action will also reset the state of each channel.

In terms of *ANSI/ISA-S18.1*, there is one more property that all Verbatim annunciator sequences share: there is no support for the *first out* sequence designations (**F1, F2, F3**). Groups of alarms and RTNs are always registered, reported and reset without regard to which one tripped out first.

K.1 Standard Annunciator Sequence (Manual Reset)

This section describes the default annunciator sequence used by the Verbatim . It is a minor variant of the *ANSI/ISA-S18.1* designation **M-1** (Manual Reset with silence pushbutton). It may be configured by entering code **923 1** in program mode.

Operations in this sequence are detailed in Section 5. Briefly, channel states transit from normal to alarm when criteria violations persist for the trip delay. The alarm state is then locked in until acknowledgment is made. The transition from acknowledged back to normal happens upon manual reset or expiration of the alarm reset timer. The RTN states are omitted from the sequence.

The annunciator states include only those visual and audible indications described above. Also, the annunciator sequence follows the transitions described there too.

This sequence differs from the vanilla **M-1** designation in two ways. The first involves the operation of the automatic reset timer. The true **M-1** sequence is obtained by turning the alarm reset timers off (code **922**). The second distinction involves configurations where no phone numbers are programmed. Here the transition from alarm to acknowledged happens automatically and immediately. There are never any audible or visual indications of the unacknowledged state. This sequence has ANSI designation **M-1-5-6**.

K.2 Clear On Return To Normal (Automatic Reset)

This section describes annunciator sequence options that are variants of the ANSI designation **A-1** (automatic reset with silence pushbutton). The main distinction of these from the **M-1** sequence is that the alarm state is automatically reset when the channel enters the RTN state. The Verbatim sequences in this category differ amongst themselves mainly in when this RTN transition is allowed to occur.

The basic **A-1** sequence is obtained by executing code **923 3**. Channel states transit from normal to alarm when criteria violations persist for the trip delay. The alarm state is then locked in until acknowledgment is made. If no phone numbers are configured, then this transition happens automatically and immediately (**A-1-5-6**). Otherwise, operator action is required. The transition from acknowledged back to normal happens via manual reset or expiration of the alarm reset timer. It also happens whenever the criteria violation for an acknowledged alarm returns to normal.

Designation **A-1-4** is obtained by code **923 2**. This sequence differs from **A-1** only in that the unacknowledged alarms are not locked in. All visual and audible indications are automatically reset whenever the criteria violations return to normal for the trip delay period.

A minor variant of **A-1-4** is obtained by code **923 4**. Here, the indications for an acknowledged alarm will not be reset until it has been reported once, regardless of RTN status. Unacknowledged alarms will be reset completely without any lock-in whatsoever.

The implementation of these **A**-designates involves one wrinkle. The check for RTN condition is not performed continuously, but rather only at specific times. Hence, changes that happen in the midst of a report may not be reflected in the annunciator state until some time later.

K.3 Report Return To Normal (Ringback)

This section describes the annunciator sequence option that provides explicit indications of RTN conditions. This is a variant of the **R-1-8** designation (ringback with silence pushbutton and common ringback audible). There are two differences between **R** and **M** or **A** designations. First is that the RTN state can be entered only from the acknowledged alarm state. **M** has no notion of RTN at all, and **A** allows the transition at any time. Second is that **R** locks in RTN states until acknowledged, whereas **A** immediately resets.

A variant of the **R-1-8** sequence is obtained by executing code **981 1**. Channel states transit from normal to alarm when criteria violations persist for the trip delay. The alarm state is then locked in until acknowledgment is made. If no phone numbers are configured, then this transition happens automatically and immediately (**R-1-5-6**). Otherwise, operator action is required.

The transition from acknowledged alarm to unacknowledged RTN is made whenever the criteria violation goes away for the trip delay period. The RTN state is then locked in until acknowledged. RTN acknowledgment is made in the same fashion as alarm acknowledgments. The channel states are reset either manually or by expiration of the reset timer. The reset timer begins running when the original alarm condition is acknowledged. This means that if a sufficiently long interval exists between acknowledgment of the alarm and the RTN, then the reset will happen immediately.

The main differences between this variant and the standard **R-1-8** sequence are as follows. First, there is no registration of momentary alarms once the RTN state is entered. Once the RTN state is acknowledged, no further calls will be triggered until the channel is reset. This is to say transitions in the channel state may continue, but will not be reflected in the annunciator state. Still, all reports will reflect the current state of the channels. Second, there is no visual indication for the RTN states. The LEDs will continue to reflect the acknowledged alarm status. Third, the silence pushbutton stops all flashing LED indications. Fourth, there is the automatic reset timer.

Unlike the implementation for the **A** designations, RTN conditions are checked continuously for all channels. So long as any unacknowledged alarm or RTN condition exists, the Verbatim will be making calls. Alarm conditions have priority. Hence, if an alarm is one call group and an RTN is in another, no calls will be placed to the RTN group until the alarm is acknowledged.

If the trigger for a call is an RTN, then the report will explicitly mention this before reporting the status of all channels in the group. An RTN report mentions RTN conditions only. Any acknowledgment while in RTN calling state acknowledges RTN conditions only. In contrast, any operator acknowledgment during an alarm call will also acknowledge all RTNs. But, the alarm reports do mention all unacknowledged RTN conditions.

If a new alarm occurs on any channel while in the RTN calling state, a change from RTN to alarm calling will occur as soon as possible. This can happen no sooner than the completion of any report in progress. Such reports may or may not include mention of the new condition depending on whether that channel has already been announced.

K.4 Annunciator Sequence Option Summary

The following paragraphs provide a concise summary of the available annunciator sequence options. The ANSI designator is given, along with the Verbatim configuration code, followed by a short functional description.

M-1: Manual Reset with Silence Pushbutton.
Code (923 1)

Alarm states are registered directly from configured criteria without regard for return to normal conditions. Alarm states are locked in and dialer will continue to call until acknowledged. Acknowledged alarms are reset via automatic timer. Total dialer reset andsilence via arm/disarm key.

M-1-5-6: Manual Reset with Silence Pushbutton, No Flashing, and No Audible.
Code (923 1) - with no phone numbers programmed

Same as **M-1**, except the alarm state is immediately converted to acknowledged state.

A-1: Automatic Reset with Silence Pushbutton.
Code (923 3)

Same as **M-1** except the acknowledged alarm state will be cleared if the channel returns to normal. The check for this transition occurs only when all alarms have been acknowledged.

A-1-5-6: Automatic Reset with Silence Pushbutton, No Flashing, and No Audible.
Code (923 3) - with no phone numbers programmed.

Same as **A-1**, except the alarm state is immediately converted to the acknowledged state.

A-1-4: Automatic Reset with Silence Pushbutton and No Lock-in.
Code (923 2)

Same as **M-1** except BOTH the acknowledged and unacknowledged alarm states will be cleared if the channel returns to normal. The check for this transition occurs only in between alarm calls.

A-1-4 variant: Automatic Reset with Silence Pushbutton, No Lock-in, and Single Acknowledge Report.
Code (923 4)

Same as **A-1-4** except the clearing for the acknowledged alarm can't happen until after a single report has been made.

R-1-8: Ringback with Silence Pushbutton and Common Ringback Audible. *Code (981 1)*

Alarm and Return to normal states are registered from criteria and locked-in. Dialer will continue to call until all alarm and RTN states are acknowledged. Acknowledged alarms and RTNS are reset via automatic timer. Total dialer reset and silence via arm/disarm key.

R-1-5-6: Ringback with Silence Pushbutton, No Flashing, and No Audible. *Code (981 1) - with no phone numbers programmed.*

Same as **R-1-8** except all unacknowledged alarm and RTN states are immediately converted to the acknowledged state.

Glossary

ACCESS CODE See Security Access Code.

ACKNOWLEDGMENT The act of advising the Verbatim autodialer that its alarm message has been heard. This is done either by pressing a touch tone 9 at the prompting beep, or by calling the unit back after the alarm call has ended. Once acknowledged, further activity on that particular channel will not cause further dialing until the expiration of the Alarm Reset Time. See Section 5.1, "Placing Inquiry Calls to the Verbatim autodialer," and Section 5.5, "Acknowledging the Alarm Call."

ALARM CALL GROUPING Special programming established to cause specific input channels to cause dialing of only selected phone numbers. Used to provide separate alarm functions according to category of personnel, such as maintenance, security, plumbing, etc. See Section 6.1, "Program Codes."

ALARM CONDITION For contact input channels, the Alarm Condition is the Open or Closed circuit condition opposite to that which was established as the Normal Condition for that channel. For example, for a channel programmed as Normally Open, the Alarm Condition would be Closed Circuit. Also see Violation. See Sections 3.3, "Programming Input Channels" and 5.3, "Receiving Alarm Calls."

ALARM CRITERIA The chosen determination of what will constitute an alarm condition (violation) for a given channel. See Normally Closed.

ALARM READY SCHEDULING A program setting which causes the Verbatim autodialer automatically disarm for certain time periods. This function prevents the product from sending alarm telephone calls during periods when personnel are stationed at the site and are able to deal with the problem directly.

ALARM RESET TIME The period of time, beginning at the moment an alarm is acknowledged, during which alarm dialing on behalf of that specific channel is suspended regardless of further activity of its input circuit. At the end of this period, the Acknowledged Alarm status is cleared for that channel. See Section 5.6, "Alarm Reset Timeout After Acknowledgment" and Section 6, "Advanced Programming."

ALARM TRIP DELAY The time required for an input violation to remain in violation before the unit trips into the Unacknowledged Alarm state. See Section 6, "Advanced Programming."

ANALOG Analog signals have variable values of current or voltage, with the specific value generally representing some physical parameter such as water level or pressure. The most common type of analog signal is a 4-20 milliampere current loop, with a transmitter (transducer and associated power supply) governing the current in a loop. This current is detected by one or more receiving devices in the loop, such as an optional analog input channel on a Verbatim autodialer.

AUTOCALL A special test calling function. When Autocall is turned on, the unit places test calls at regular intervals to provide ongoing assurance of Verbatim autodialer and phone line operation. See Section 6, "Advanced Programming."

AUTODIALER A device which constantly monitors a set of inputs from various external sensors, and places outgoing alarm calls when there is an alarm condition. It also allows inquiry calls.

AUTOEXTEND A unique feature on the Verbatim autodialer which automatically extends the available message recording time as required, selecting the optimum speech memory rate for the user's voice message recording. See Section 4.2.1, "Verifying/Extending Recording Time."

CALL BACK See Call Forward.

CALL FORWARD The unit may be commanded from the panel or over the phone, to place a call to a specific phone number. This is called Call Forwarding. If the number called is that of the person commanding the call from a remote telephone, then it is termed Call Back. This is typically done for test purposes. See Section 5.8, "Dialing Out and Conversing Through the Verbatim autodialer," and Section 6, "Advanced Programming."

CALL OUT The action of the Verbatim autodialer placing calls to outside personnel or facilities.

CDL (Central Data Logger) The combination of a modem, a serial interfaced printer and a special Raco-built interface box is called a Central Data Logger (CDL). A Raco autodialer/RTU may be configured to call and log data to the CDL printer. CDL RTUs first call the CDL printer to log alarm and status information then proceed on to calling personnel by voice.

CLOSED CIRCUIT CONDITION One of two possible states of a contact closure input circuit. Closed Circuit is the condition in which the contacts complete the electrical circuit connection. Open Circuit is the opposite condition, in which the contacts do not complete the electrical circuit connection. The Open Circuit condition is electrically equivalent to having no connection to the input circuit. A Closed Circuit input will measure zero volts DC from the input connection to the common connection point. An Open Circuit input will measure 5 volts DC. The Open or Closed Circuit status may

also be read without a voltmeter, by use of Program Code 0 ZZ 0, where ZZ is the 2-digit channel number. See Section 3.3, "Programming Input Channels" and 5.3, "Receiving Alarm Calls".

COMMON The combined electrical return connection point for all contact closure inputs. One side of all contact inputs are connected to Common. Physically, this Common connection point is any of the 4 terminals marked C on terminal strip TS1. The circuit board internally connects Common to the AC ground (GREEN) terminal on terminal strip TS3. See Section 2, "Installation."

DEFAULT Programming values which are built into the unit and remain in effect until the user alters them. Also, permanently available speech messages which are utilized when the user has not recorded his own messages.

DELAY BETWEEN DIGITS In some applications, an extra waiting time is needed between dialed digits. For example in some PBX systems, a 9 must be dialed, followed by a waiting time of several seconds before the main phone number may be dialed. See Section 3.2, "Programming Phone Numbers," Appendix F, "MODBUS Interface," and Section 6, "Advanced Programming."

DESIGNATION NUMBER The two-digit "order number" of a phone number in the overall set of phone numbers programmed. For example, the designation number for the third phone number is 03. See Programming Worksheet A. See Section 3.2, "Programming Phone Numbers," 6.1, "Program Codes," and 6.2, "Programming Operations."

DIALER See autodialer.

DRY Description of a sensor contact circuit that is not connected to any power source.

EXIT DELAY A delay period after a user arms the unit, before the unit will actually accept new alarms. Used to allow user to exit a protected entrance without tripping the unit into alarm. See Section 6, "Advanced Programming."

GLOBAL Essentially "over all" or "universal". Programming that simultaneously sets the same value for all channels, but excluding the Power Failure Alarm function.

GROUPING See Alarm Call Grouping.

ID MESSAGE See Station ID Message.

INQUIRY CALL A call placed by personnel to the Verbatim autodialer. See Section 5.1, "Placing Inquiry Calls to the Verbatim autodialer."

LED A lighted legend indicator on the front panel.

LINK See Alarm Call Grouping.

MEMORY USE RATE See Speech Memory Rate.

MODEM A device which allows digital data (as opposed to voice) to be transmitted between two sites, usually via public telephone lines. In the case of a Verbatim autodialer equipped with the CDL or SCADA option, a modem is built into the option card so that no external modem is required.

NETWORK The physical and higher level protocols for a specific vendor's PLC data communications. The Verbatim can support a maximum of 3 networks simultaneously. The actual number of networks and type of protocol are hardware options.

NETWORK ADDRESS The concatenation of the network ID, node, and PLC address. It is sometimes symbolized by '/net/node/addr' where net is the network ID, node is the node address, and addr is the PLC address. The network address suffices to uniquely identify any data object which the Verbatim can access.

NETWORK ID A voice message identifying a specific network. By default, the message is "Verbatim Net X", where 'X' is a number from 0 to 5. Custom messages, such as "Building 320 LAN" may be recorded. See 'NETWORK' entries below for more details.

NETWORK 0 Refers to the discrete, analog, and RSC points internal to the VSS.

NETWORK 1 Refers to devices connected to the 'NET1' port on the serial communications card. Protocols may vary.

NETWORK 2 Refers to devices connected to the 'NET2' port on the serial communications card. Protocols may vary.

NETWORK 3 Refers to devices connected to the MBPLUS port on the MBPLUS communications coprocessing card.

NETWORK 4 Refers to devices connected to the Parallel port.

NETWORK 5 Refers to devices connected to the Modem port on the serial communications card.

NODE The address of a specific PLC on the network. Each PLC is already configured with a unique integer as its node address. The Verbatim must also be given a unique number as its node address on each network to which it interfaces. The network ID and node together suffice to uniquely identify any PLC.

NORMAL CONDITION For contact closure inputs, the Normal Condition is that condition (open or Closed Circuit) which normally exists. The opposite condition would create an alarm. See Section 3.3, "Programming Input Channels" and 5.3, "Receiving Alarm Calls."

NORMALLY CLOSED Describes a monitored "contact type" input signal circuit, for which the normal, non-alarm state is associated with the circuit being closed (i.e. a completed connection being established between the two conductors of the input circuit). An alarm condition causes the circuit to be opened (broken), which the Verbatim autodialer would detect and begin placing alarm calls. This requires that this input be programmed as Normally Closed on the Verbatim autodialer.

NORMALLY OPEN Opposite of a Normally Closed circuit. The input signal is open in the normal, non-alarm state and closes when an alarm occurs. This requires that this input be programmed as Normally Open on the Verbatim autodialer, which is the default setting for a contact type input.

NON-VOLATILE MEMORY When AC power fails, the unit continues to operate for several hours on its internal Gel Cell battery. When this battery is near discharge, the unit automatically turns itself off. However all the user's programming and all user recorded messages are kept intact by Non-volatile Memory for up to ten years, so when power is later restored, no reprogramming or message recording will be required.

OPEN CIRCUIT CONDITION See Closed Circuit Condition.

PHYSICAL CHANNEL OR PC Internal inputs are sometimes call Physical Channels (PCs). PCs monitor user-supplied external sensors such as float switches, limit switches, etc. In most cases, the outputs of logic controllers may be connected directly to Physical Channel inputs without the need for interfacing relays or other signal conditioning. The normal Verbatim inputs, as distinguished from the RCs when necessary. The semantics are such that all RCs on network 0 are PCs.

PLC ADDRESS The data table location of an object within a specific PLC's internal memory. The format of the PLC address is vendor dependent. For network 0, the PLC address is the physical channel number.

POWER FAILURE The disappearance of 120 VAC power to the unit. The unit will continue to operate under power failure until its internal Gel Cell battery is discharged.

PULSE TOTALIZER The totalizer function accumulates a continuing count of the number of cycles of a train of pulses presented to the input. The pulses may be in the form of an open and closed circuit, or they may be in the form of a 5-volt logic signal.

RECORDING RATE In the process of digitally recording the user's voice messages into speech memory, the message is recorded into memory at one of four possible rates. The faster this rate of memory usage, the higher the recording fidelity. However, this results in less total available recording time than at slower rates. Rate 1 is the fastest rate giving the best sound quality. The Auto-

extend feature automatically selects the optimum rate to allow adequate recording time for the user's own set of messages at the best possible sound fidelity. See Section 4.2.1, "Verifying/Extending Recording Time," and Section 4.3, "Record Your Messages."

REMOTE CHANNEL OR RC A Verbatim I/O point whose value mirrors the value at some network address. Each active RC is associated with one and only one network address. The RC number can be viewed both as a 'speed dial' abbreviation for the lengthy network address and as a 'virtual' I/O point that supports alarm criteria. Different RCs can refer to the same network address. All data objects referenced by any RC are either 1 or 16 bits in length. 1-bit objects are termed "discrete" or "digital" points. 16-bit objects are sometimes termed "analog" points even though the data may actually be a discrete counter or timer. The type of object is implicit in the RC's network address. This is to say, any RC can be either discrete or analog.

Analog RCs are NEVER scaled to engineering units within the Verbatim Gateway. They can only have decimal integer values in the range 0 to 65535. Any desired must be done within the PLCs program. Floating point, hexa-decimal, and octal data formats are not supported.

REPEATS The number of times a series of messages (including Station ID message) is spoken when an alarm call is placed. As used here, this number includes the first recital of the messages. For example, 3 repeats means 3 times total, not 4. See Section 5.3, "Receiving Alarm Calls" and Section 6.1, "Program Codes."

RING ANSWER DELAY The number of rings required before the Verbatim autodialer will answer an inquiry call. See Section 5.3, "Receiving Alarm Calls," and 6.1, "Program Codes."

RTU (Remote Telemetry Unit) A monitoring device, interfaced to a communications medium, whose mission is to communicate conditions at a remote or inaccessible site. RTUs are usually polled by a central computer on some schedule or interval. Additionally, RTUs may request polling to report any exceptions such as alarms or other events which require the attention of the central computer or its operators. When a Raco Verbatim autodialer is configured with the asynchronous communications module it is known as an RTU. The Verbatim RTU does not loose any of the basic features of the Verbatim autodialer. In addition, the Verbatim RTU is capable of receiving polling calls from the Raco SCADA Central Computer. Furthermore, alarms may be communicated to the Raco SCADA Central Computer or to a Raco Central Data Logger (CDL) printer.

RUN TIME METER A feature which, when turned on, accumulates the total number of hours that an input channel is in the Closed Circuit condition. Typically used to monitor equipment operation time, particularly alternating pump systems. See Section 3.3, "Programming Input Channels," and Section 6, "Advanced Programming."

SCALE FACTOR A translation factor which may optionally be entered in conjunction with the Pulse Totalizer function. The spoken Totalizer reading will be the actual number of pulses accumulated, divided the programmed scale factor. See Section 6, "Advanced Programming."

SECURITY ACCESS CODE A code optionally programmed by the user at the front panel. Once programmed, this code is required in order to perform any program operations over the phone. See Section 5.7, "Programming by Phone," and Section 6, "Advanced Programming."

SPEECH MEMORY RATE See Recording Rate.

STATION ID MESSAGE A message which is always included in all phone calls to or from the unit, intended to identify the unit. The default Station ID Message is "ID number is 1". See Section 4.1, "Planning Messages" and 4.3, "Record Your Messages."

TIME BETWEEN ALARM CALLS With the unit in Unacknowledged Alarm status, the waiting time from the time the unit terminates a given alarm call, until the time when the unit again accesses the phone line to place the next call. During this interval (default 2 minutes), personnel may call the unit back, which will acknowledge the alarm and suspend further calling. See Section 5.4, "Continued Dialing in the Absence of Acknowledgment," and Section 6, "Advanced Programming."

VIOLATION For contact closure inputs, a violation (also called Alarm Condition) is the Open or Closed Circuit condition which is opposite the condition which has been programmed as Normal for that channel. For example, if a given input channel is programmed for Normally Open operation, then a Closed Circuit is a violation for that input. If the violation persists for the Alarm Trip Delay time, the unit will go into Unacknowledged Alarm state and begin placing alarm calls. See Section 3.3, "Programming Input Channels, " 5.3, "Receiving Alarm Calls," and 5.6, "Alarm Rest Timeout After Acknowledgment."

Index

A

alarm
  acknowledgement I-3
  by pulse rate 6-12
  clear all 6-23
  disable warning I-7
  local configuration H-7
  message 4-2
  message repeats 6-23, 5-2
  message specification I-4
  non-response calling 5-3
  power failure 5-3, 6-25
  reset time 5-4, 6-22
  relay H-7
  time between dialouts 6-22
alarm auto phone dialing 1-1
alarm call
  worksheet J-3 thru J-10
Alarm Call Grouping I-2, 6-5
Alarm Ready Schedule 7-1
  Control Number 7-8
  modes 7-3
  priorities 7-5
  programming 7-5, 7-10
  temporary override 8-1
alarm reset time 5-4, 6-22
alarm trip delay 6-13
  codes 6-4
  default value 6-13
  global setting 6-14
  individual setting 6-14
analog
  connections B-1
  Input Signal Type B-1
  programming codes B-9
  Setpoints B-8
  speech messages B-9
analog input programming codes 6-4
analog math B-4
Annunciator Sequence K-1
Answer mode E-5
ARM/DISARM (930) 6-25
audio output H-2
Autocall Test 6-24, I-2
Autodialer (DFP) A-1
Autoextend 4-2, 4-3

B

battery
  "LO BAT" 8-1
  power backup I-5
  replacement 8-1
  type 8-1
BAUD RATE
  Allen-Bradley F-17

C

Cable
  color codes C-3
  PLC Network Connections G-4
  VBB-1 Serial Cable Connection G-7
  VMB-2 Serial Cable Connection G-5
  VMBM-1 Serial Cable Connection G-6
  VPPC-1 Parallel Cable Connection G-3
  VSER-01 Serial Cable Connection G-2
  VTI 405/505 DCM G-8
cable length maximums 2-6
Call Progress Monitoring 6-16, 6-19
Call Grouping 6-21
Call-in acknowledgement 5-1
Callback 6-25
calling autodialer 5-1
cancel 3-1
Cellularm H-20
channel
  linking to phone numbers 6-21
  phone report 5-5
channel programming codes 6-3, 6-11
channel status
  LEDs F-3
  reading codes 6-3, 6-10
  report 5-1
checking status 5-1
clear
  acknowledged alarms 6-23
  alarm reset timers 6-23
  selected items 6-27
clear a program 3-1, 6-1
clear out operations codes 6-9
Clearout Operations F-19, F-27
  codes 6-9
clock
  starting 7-6
Closed Circuit alarm 3-2
CMOS inputs 2-2

code
  Data Register F-25
  Remote Channel Status F-25
code 500 3-3
Code Listing Abbreviations F-10
codes
  Alarm Call Grouping F-26
  Alarm Trip Delays F-26
  Linking F-26
  Message Recording and Reviewing F-25
  Network Bridging F-26
  programming 6-1
  Remote Channel F-25
  Remote Channel Programming F-25
COMALARM F-9
communications errors F-12
Communications Protocol 7-4, I-5
configuration codes 6-3, F-25
configuring
  data register monitoring F-2
  local alarm H-7
  Remote channels 7-11
configuring codes 6-11
connecting
  four-channel unit 2-2
  Verbatim to PLC F-1
connection
  8 or more input unit 2-2
connector
  36 pin 2-4
Call Progress Monitoring (CPM) 6-16, 6-19
criteria
  alarm 3-3, 6-11
Customer Service 9-4, F-5

D

data calls E-5
data register
  address F-2, F-7
  alarm state F-2
Data Register Address F-7
data registers
  reading, writing F-1
data table addresses F-1
Data/Voice Autocalls E-6
date
  checking 7-6
  factory defaults 7-9
  programming 2-6
  setting clock 7-6
DC Power Connection diagram H-4
default(s)
  programming codes 6-1
  time and date 2-7
  factory set 7-9
delay
  dialing 6-15
  return to normal 6-25
DFP Autodialer A-1
  clearing A-4
  programming A-1
  recording messages A-5
  testing A-4
Diagnostic commands F-20 thru F-24
  count codes 6-27
  readout codes 6-9
Diagnostics I-4
Dialing
  delays 6-15
  pulse or tone selection 6-16
Dialing Out 3-4, 5-6
disable
  inputs 3-3
DISARM
  reading, setting time 7-7
  setting date 7-7
disarm unit 3-4
DISARM/REARM (930) 6-25
DTMF H-15

E

Enclosure Diagram H-23
end
  phone call 5-5
Enhanced Telephone Interface 6-15
Error Code listing F-23
exit delay 6-25

F

loobydust H-1
four-channel 2-2

G

Verbatim Remote Channel 7-2
Global alarm trip delay 6-14
Grouping
  Alarm call 6-21

H

heater H-11
  installing 2-1
Holiday schedule mode 7-4

I

inactivated RCs F-6
individual contact
  input 3-3
input
  disabling 3-3
Input Channel Numbers
  analog B-2
input channels
  programming 3-2
Input Monitoring I-4
Input Signal Type
  analog B-2
  codes B-3
Inquiry Message and Function I-5
installation
  verification testing 3-4
installing
  autodialer 2-1
  line seizure feature H-8
Intercall
  delay, 6-9, 6-20
  quick delay E-2

J

jack AJ1, audio output H-2
jumper block diagram H-26

K

Key
  DIALOUT/PRESS TO TALK 3-4
  CANCEL
    phone code 5-5
  CHECK STATUS 5-2
  ENTER
    phone code 5-5
  MINUS
    phone code 5-5
  NORMAL 3-4
  POINT
    phone code 5-5
  REARM/DISARM 7-1
  RECORD 4-4

L

ladder logic program listing F-5
(LDL) Local Data Logger 6-18
LED
  battery 8-1
  channel alarm 5-4
  DISARM 3-4
  Network Status Indicator F-9
  PFAIL 3-4
  specifications I-7
line seizure H-8
linking
  clearing link F-17
  modes F-15
  phone numbers to channels 6-21
  phone numbers to RCs F-14
listening period 6-26
listing
  programmed phone numbers 5-5
Local and Remote Programming I-2
Local Data Logger 6-18
logic controller inputs 2-2

M

maintenance 8-1
memory
  message recording F-2
  specifications I-3
message
  alarm condition 4-2
  alarm is acknowledged 5-1
  normal condition 4-2
  recording speed H-6
  reinstate default 4-5
  repeating 6-23
  review, replay 4-4
  verifying 4-3
message recording and reviewing codes
    6-3, 6-10
messages
  extending recording times 4-5
  recording 4-1, 4-4
microphone operation 6-26
Modbus
  Networks F-7
  protocols F-1
modems
  automatic speed selection E-4
Modicon
  PLC F-7
  protocols F-7
Modular Upgrades I-6
monitor inputs 1-1
Motherboard diagram H-24
mounting location 2-1

N

NEMA 4X weatherproof outer enclosure 2-1
Net Address F-6, F-12, F-28
  associating with RC F-6
NET Number F-7
Network Bridging F-15
network protocols F-1
Network Status F-22
node
  PLC node number F-9
node addres
  default F-6
Nonvolatile Program Memory I-3
NORMAL, key 5-6
normally open/closed 3-2

O

offset factors
  programming B-3
Open Circuit alarm 3-2, 3-3
operation
  remote supervisory control C-1
Opto 22 relays
  types C-1
Order Items, Special I-7
output
  direct connection C-3
  installation C-1
  remote supervisor control C-1
Output Relay Enclosure C-1

P

Pager
  numeric support H-15
Parallel Printer Interface D-1
Parallel Printer Port Adapter Cable 2-4
parameters
  network F-18
  protocol F-18
  timing F-18
parts, returning 9-4
PBX
  support 6-16, H-6
PFAIL LED 3-4
phone
  callback 6-25
  designation number (DN) 6-2
  dialing out through autodialer 5-6
  ending call 3-4
  high speed dialing 6-15
  inquiry calls I-5
  line busy 6-19
  line specifications I-5
  linking numbers to channels 6-21
  non-existant number 6-19
  programming by 5-4
  programming numbers 6-14
  ringing stopped 6-19
  testing connection 3-4
  unanswered 6-19
  worksheet J-2
Phone Fault 6-16
phone number
  programming 3-2
  codes 6-4
Phone Support 9-4
PLC (Programmable Logic Controller) F-1
  Address Format F-8
  data register F-1
  node number F-7
  operating parameters F-5
  Programming Code Table F-25
power
  alternate sources H-3
  battery backup I-5
  DC power specifications H-3
power failure I-4
  Alarm 6-25
  setting alarm delays 6-14
power requirements 2-1
printer
  local option D-1
  paper loading 2-6
  parallel interface D-1
  restoring operation 2-6
  serial interface D-1
  turning off 2-8
printer buffer 2-6
printer installation 2-4
printing
  current programming 2-7
  intervals D-2
  scheduling 2-7
  switching off 2-7
Program mode 3-1
Programmable Logic Controller (PLC) F-1
programming
  alarm call group worksheet J-3 thru J-10
  alarm call grouping 6-21
  Alarm Ready Schedule 7-5, 7-10
  analog connections B-1
  by phone 5-5
  clear all 3-1

codes 1-2, 6-1
dialing delay 5-5
input channels 3-3
local and remote specifications I-2
offset factors B-3
omitting a field F-6
phone numbers 3-2, 6-14, J-2
phone numbers to channels 6-21
printing 2-7
real world method B-5
report status 3-3
resetting operations 3-1
review mode 5-5
scaling factors B-3, B-4
system specific method B-5
voice 1-1
Public Address Broadcast I-6
Pulse
selection 6-16
Pulse Totalizer
inputs I-2, I-4
codes 6-12
Pulse/Tone
automatic selection 6-18
dialing codes 6-4

R

radio transmitter
connecting H-12
RC
alarm criteria F-3, F-13
commands F-5
criteria-based alarms F-8
digital, analog F-3
linkage configurations F-15
Linking F-15
polling F-19
programming F-5
programming key sequences F-6
remote message recording F-12
Status F-10
status over phone F-3
RC (Remote Channel) F-1
real world method
programming B-5
REARM
delay 6-26
key 3-4
reading, setting time 7-7
setting date 7-7
recording
alarm relay H-7
extending individual messages 4-5
messages 4-1, 4-4
setting rate 4-5
speech times H-5
relay, alarm H-7
remote alarm monitoring 1-1
Remote and Local Programming I-2
Remote Channel (RC)
pre-configured F-1
Remote Supervisor Control C-1
codes 6-7
mounting C-1
wiring C-1
operation C-3
report
closed input circuits 6-12
status only 3-3
reset
alarm time 5-4, 6-22
clear a program, 3-1, 6-27
Return To Normal (RTN) E-1
returning parts 9-4
ring answer delay 6-23
ring back K-3
rotary flow meters 6-12
Run Time Meter 3-3, 6-11, I-2
inputs I-4

S

SCADA E-2 thru E-4
scaling factors
programming B-3
Security Access Code 6-24
seizure, line H-8
Serial Port Parameters F-18
Serial Printer Interface D-1
set points, high/low analog B-8
setting
recording rate 4-3, 4-5
touch or tone dialing 3-2
settings
review 6-1
speaker
adjusting volume H-1
external connections H-2
operation 6-26
speakerphone I-5
Special Order Items I-7
speech messages
analog programming B-9
recording times H-5
Station ID 4-1
STATUS key 5-2
Status, network F-22

Supervisory Control, Remote C-1
Support, phone 9-4
Surge Protection I-6
system memory
  clear all 3-1
system specific method
  programming B-5

T

Telephone
  Line Fault Detection 6-16
  terminal strip 2-2, H-9
Telephone Interface
  enhanced 6-15
Temperature Sensor B-3, B-7
temperature sensor input B-3
terminal strip TS1 2-2, H-9
testing
  routine 8-1
TFAIL 6-18, 3-1
thermostat
  specifications H-11
  installing 2-1
threshold violations F-9
time
  checking 7-6
  factory defaults 7-9
  programming 2-7
  setting clock 7-6
Timing Parameters F-18
Tone
  detect H-15
  selection 6-16
Tone/Pulse
  automatic selection 6-18
  dialing codes 6-4
Totalizer
  default value 6-13
Troubleshooting 9-1
  analog channels B-11
TS705 H-7
TTL inputs 2-2

U

upgrades I-6

V

version level 2-4
Voice/Data Autocalls E-6
VPPC-1 cable 2-4
VRSC C-1
VX32 Channel Expansion Card 2-2

W

Warranty I-6
  Registration Card (see back of manual)
weekday schedule mode 7-4
weekend schedule mode 7-4
Wiring Connections
  remote supervisory control C-1
wiring connections 2-1
worksheets (see Appendix J)

FCC Notice to Users

1. You must notify your telephone utility as follows:
    a. Intention to install an FCC Part 68-registered device.
    b. The FCC registration number: HKS-23J06304-AL-R
    c. The ringer equivalence number: 0.3A
    d. When the device is disconnected from the telco network and will not be reconnected.
2. These units may not be used on party lines.
3. The telco has the right to make changes in their network which may affect the operation of your unit, provided adequate notice is given to you in advance to permit continued correct operation.
4. In the event of operational problems, disconnect your unit by removing the modular plug from the modular telephone jack. To test the phone line, temporarily plug a working rotary-dial telephone into the jack normally used by the Verbatim. If the substitute telephone works correctly, your Verbatim has a problem and should be returned for repairs (in or out of warranty). If the substitute telephone does not work correctly, notify the telco that they have a problem and request prompt repair service (at no cost to the user).
5. The user may not under any circumstances (in or out of warranty) attempt any service or repairs on the Verbatim. It must be returned to RACO for all repairs.

Warranty Registration Card

KEEP THIS FOR YOUR RECORDS

Important:

Within 14 days of purchase, please complete this Warranty Registration. Detach the top portion, fold in half and drop in the mail. Postage is paid if mailed in the U.S. Otherwise, please return to:

RACO Manufacturing and Engineering Co. Inc.
Service Department
1400 62nd Street
Emeryville, California 94608

Detach here before mailing

Model	**VERBATIM**
Serial number	
Date of Purchase	
Name	
Title/position	
Company/Organization	
Division/Department	
Address	
Telephone	
Dealer's Name	
Address	

Response Card

The following additional information will assist us in our continuing efforts to provide you with products that meet your specific requirements.

Please send me more information on the following quality products from RACO Manufacturing:

1. This Autodialer is used in:

   _ wastewater __ gas pipeline
   _ cold storage __ chemical manufacture
   _ energy generation __ agriculture
   _ remote equipment _____ other

2. It uses the following types of transducers:

   _ pressure __ temperature
   _ electrical detection __ gas (all types)
   _ intrusion __ flow
   _ float level _____ other

3. I first became aware of this Autodialer from:

   _ dealer showroom __ colleague
   _ Central Data Logging __ trade show
   _ professional association __ magazine inquiry
   _ _____ other.

4. I read the following publication(s) regularly:

   _____
   _____
   _____

Product Data Sheet
00813-0100-4727, Rev RA
December 2007

Rosemount 8700 Series Magnetic Flowmeter Systems

THE 8700 E-SERIES...

- *Industry leading performance with standard reference accuracy of 0.25% of rate with an optional High Accuracy of 0.15% of rate.*
- *Rosemount 8732 HART Transmitter - Integral-mount design, backlit display, and explosion-proof housing. Available with I.S. Outputs, Device Diagnostics, and Internal Meter Verification to improve reliability and performance*
- *Rosemount 8712 HART Transmitter - available with Device Diagnostics to improve reliability and performance. Quick setup with easy-to-use local operator interface*
- *Rosemount 8712H/8707 High-Signal System - Pulsed DC solutions for the most demanding flow measurement applications*
- *Rosemount 8705 Flanged flowtube sensor - Fully welded flowtube sensor for maximum protection (standard ISO lay length)*
- *Rosemount 8711 Wafer flowtube sensor - Economical, compact, and lightweight flowtube sensor, provided with alignment rings for easy installation*
- *Rosemount 8721 Hygienic flowtube sensor - Specifically designed for food, beverage, and life sciences applications*
- *Rosemount 8742 FOUNDATION™ fieldbus Transmitter - Integral-mount design available with Device Diagnostics*

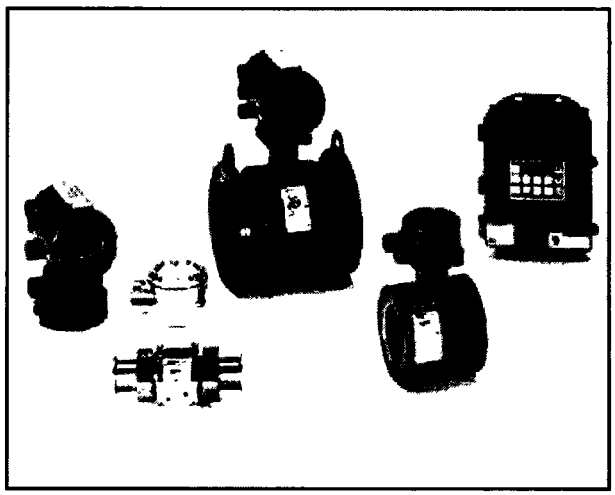

Contents

Product Offering Overview . . . . . page 2
Specifications . . . . . page 15
Product Certifications . . . . . page 34
Dimensional Drawings . . . . . page 47
Magnetic Flowmeter Sizing . . . . . page 60
Product Selection Guide . . . . . page 62
Ordering Information . . . . . page 65
Configuration Data Sheets . . . . . page 85

Rosemount 8700 Series System Overview

Rosemount 8732E

The Rosemount 8732E transmitter has multiple diagnostic suites available. Best in class performance coupled with advanced diagnostics provides unparalleled process management capabilities. With an optional backlit 2 line by 16 character local operator interface, the transmitter can be configured by optical switches to simplify adjustments in hazardous environments without removing the cover.

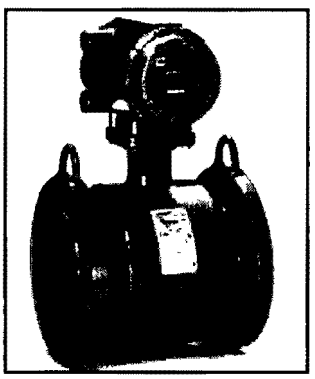

Rosemount 8742C

The Rosemount 8742C is for applications that require FOUNDATION fieldbus output protocol. Available with optional diagnostics that optimize meter performance and improve process management.

Rosemount 8712D

The remote mount 8712 transmitter brings diagnostics to any HART/ 4-20mA system that can change how magmeters are installed, maintained, and verified. The Rosemount 8712 also features an easy-to-use operator interface, with quick access to all diagnostic information, and instant access to basic configuration setup through dedicated keys.

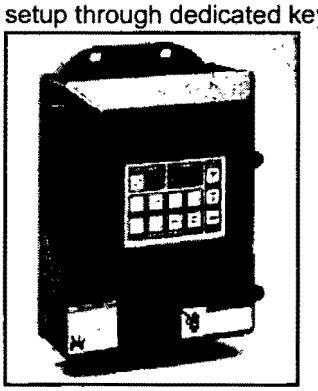

Rosemount 8714D

The Rosemount 8714D Calibration Standard attaches to an 8712D, 8732, or 8742C transmitter's flowtube sensor connections to ensure traceability to NIST standards and long-term accuracy of the flowmeter system. The 8714D is not compatible with the 8712H High-Signal transmitter

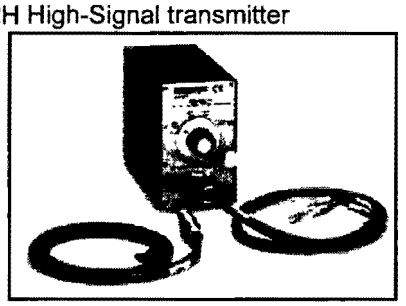

Rosemount 8705 Flanged Flowtube Sensors

All flanged flowtube sensors are fabricated from stainless and carbon steel and welded to provide a hermetic seal that protects against moisture and other contaminants. Sizes range from ½ in. (15 mm) to 36 in. (900 mm). The sealed housing ensures maximum flowtube sensor reliability by protecting all internal components and wiring from the most hostile environments.

Rosemount 8707/8712H High-Signal Magmeter System (1)

The 8707 High-Signal Flowtube Sensor, used in conjunction with the 8712H High-Signal Transmitter, forms the Rosemount High-Signal Magnetic Flowmeter System. This system provides stable flow measurement in the most difficult high-noise applications while maintaining the benefits of DC technology. The increased signal strength of the high-signal system is made possible through a combination of flowtube sensor coil design that incorporates the most advanced materials and an extremely efficient and innovative coil drive circuit. The increased signal strength of the Rosemount high-signal system, coupled with advanced signal processing and superior filtering techniques, provide the solution to demanding flow measurement applications.

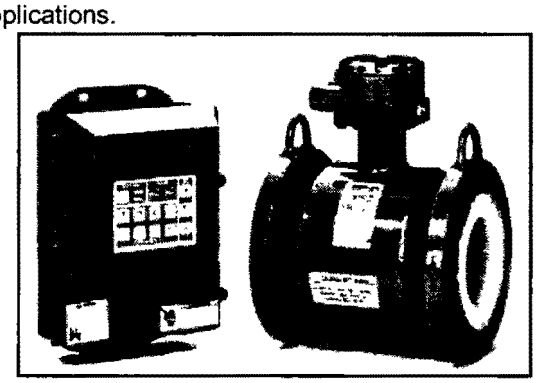

Rosemount 8711 Wafer Flowtube Sensors

The flangeless design of the 8711 wafer flowtube sensor makes it an economical, compact, and lightweight alternative to flanged magnetic flowmeters. Alignment rings provided with every 8711, center the flowtube sensor in the process line and makes installation easier.

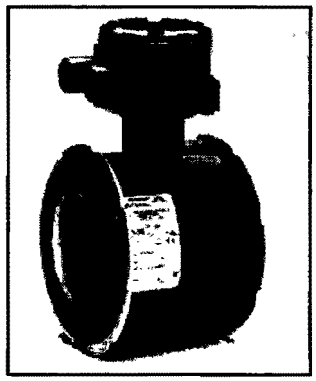

Rosemount 8721 Hygienic Flowtube Sensors

The 8721 hygienic flowtube sensor is specifically designed for the demanding applications in food, beverage, and life sciences. The robust, all-welded, full diameter flowtube sensor is constructed of FDA approved materials and is authorized to display the 3-A Symbol (Authorization #1222) is certified by EHEDG (#C03-5229) and is approved for use in FDA Grade A milk meter based timing loops (M-b 350). Sizes range from ½" (15mm) to 4" (100mm) and are available in a variety of industry standard process connections.

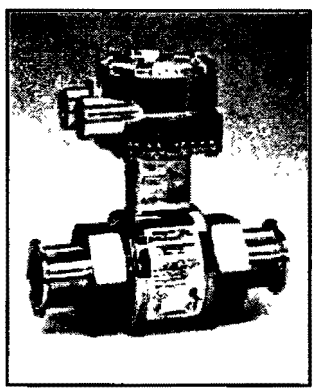

(1) The high-signal magmeter system is not currently available with CE mark.

Rosemount Magmeter Diagnostics Power PlantWeb

Rosemount Mag Diagnostics Power PlantWeb to Reduce Cost & Improve Output by Enabling New Practices

Rosemount Magmeters provide device diagnostics that powers PlantWeb and informs the user of abnormal situations throughout the life of the meter - from Installation to Maintenance and Meter Verification. With Rosemount Magmeter diagnostics enabled, users can change their practices to improve plant availability and throughput, and reduce costs through simplified installation, maintenance and troubleshooting.

Diagnostics	Mag User Practice	8732E HART	8712D HART	8712H HART	8742 FOUNDATION fieldbus
Basic					
Empty Pipe	Process Management	•	•	•	•
Electronics Temperature	Maintenance	•	•		
Coil Fault	Maintenance	•	•	•	•
Transmitter Faults	Maintenance	•	•	•	•
Reverse Flow	Process Management	•	•	•	•
Advanced (Suite 1)		DA1 Option	DA1 Option	N/A	D01 Option
High Process Noise	Process Management	•	•		•
Grounding/Wiring Fault	Installation	•	•		•
Electrode Fault	Maintenance				•
Advanced (Suite 2)		DA2 Option	N/A	N/A	N/A
8714i Calibration Verification™	Calibration Verification	•			
4-20 mA Loop Verification	Maintenance	•			

OPTIONS FOR ACCESSING DIAGNOSTICS

Rosemount Magmeter Diagnostics can be accessed through the Local Operator Interface (LOI)(1), the 375 Field Communicator, and AMS™ Suite: Intelligent Device Manager.

Access diagnostics through the LOI for quicker installation, maintenance, and meter verification(1)

Rosemount Magmeter Diagnostics are available through the LOI to make maintenance of every magmeter easier.

Access diagnostics through AMS Intelligent Device Manager for the ultimate value

The value of the diagnostics increases significantly when AMS is used. Now the user gets a simplified screen flow and procedures for how to respond to the diagnostic messages.

(1) Not available for the 8742 FOUNDATION fieldbus transmitter.

8714i Calibration Verification Improves Magnetic Flowmeter Verification Practice

Diagnostic in LOI

8714i Test In Progress 0	Tube Cal Dev: 0.08 %	8714i Result: Passed
8714i Calibration Verification checks transmitter and flowtube sensor characteristics.	*Deviation from baseline values are reported.*	*Meter Calibration is verified.*

Diagnostic in AMS

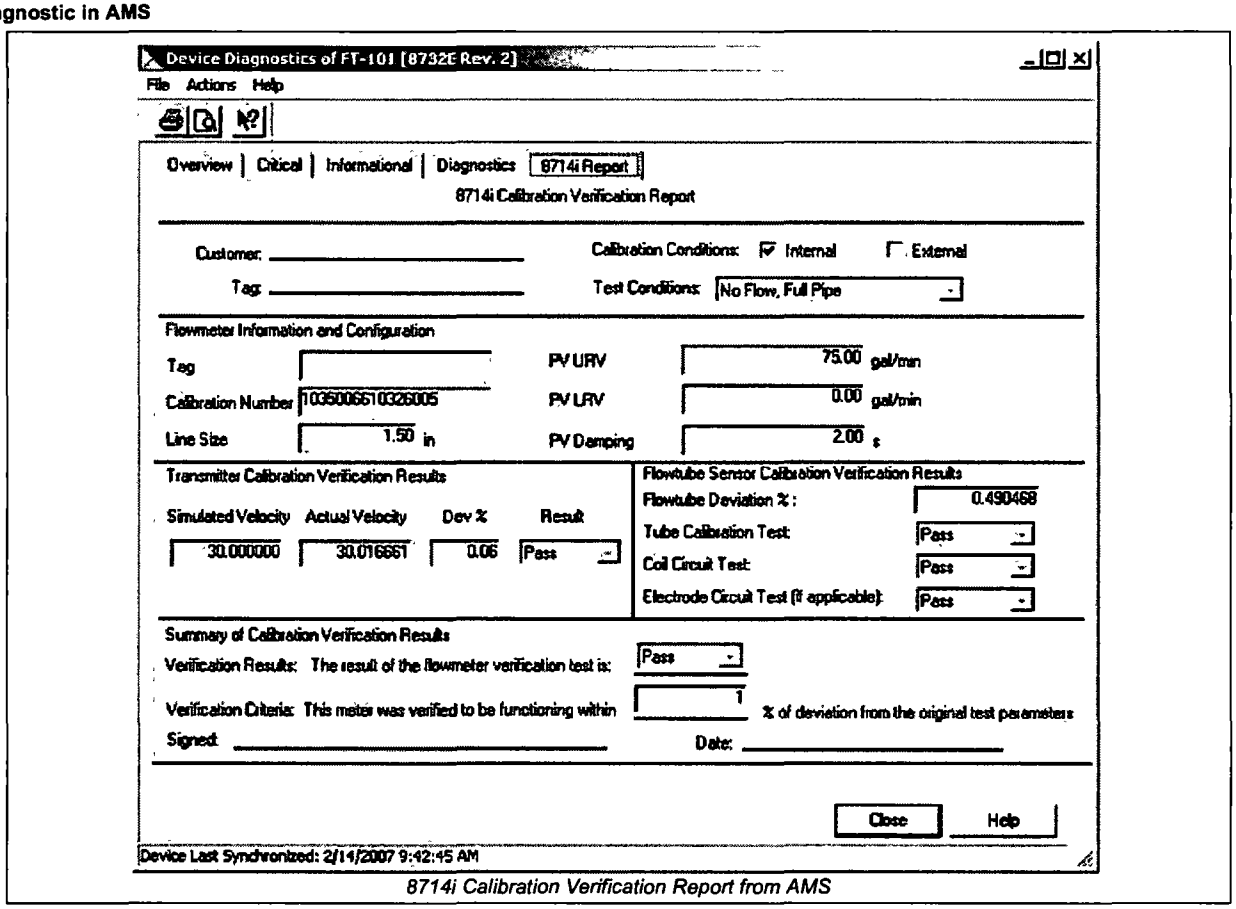

8714i Calibration Verification Report from AMS

Grounding/ Wiring Diagnostic Improves Installation Practices

Diagnostic in LOI

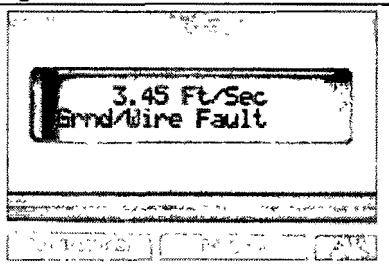

Grounding and wiring fault displays on LOI.

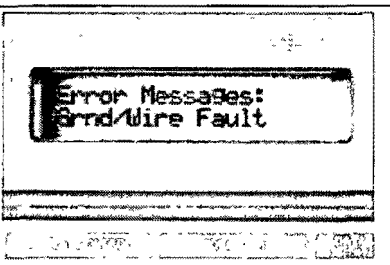

Error messages under Diagnostic menu.

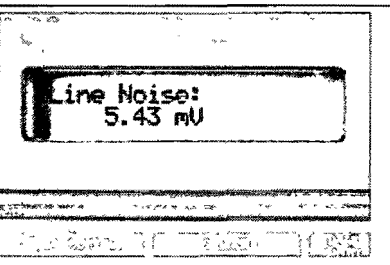

Line noise value can be viewed. If line noise is > 5 mV, Diagnostic is tripped.

Diagnostic in AMS

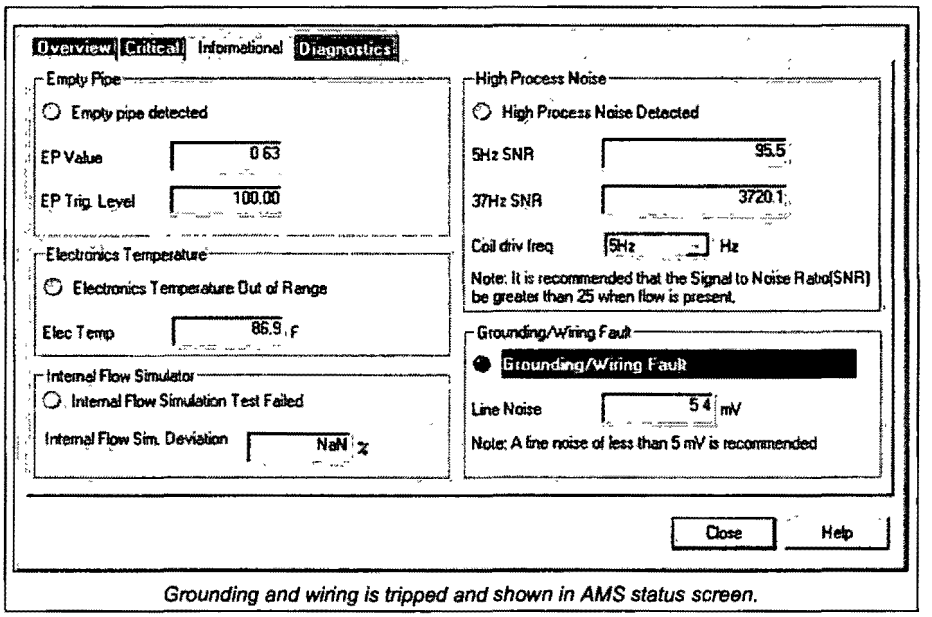

Grounding and wiring is tripped and shown in AMS status screen.

High Process Noise Diagnostic Improves Process Management

Diagnostic in LOI

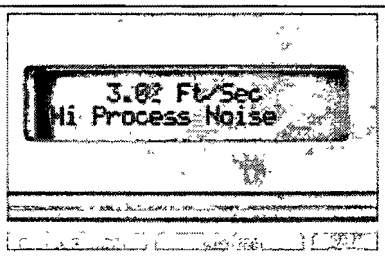

LOI indicates high process noise is detected.

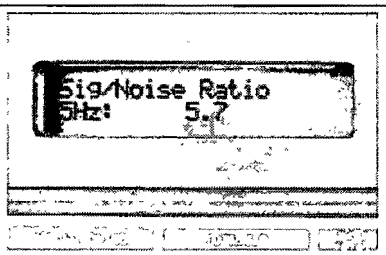

Signal-to-noise ratio (SNR) is viewed in Diagnostic menu. If < 25:1, diagnostic tripped.

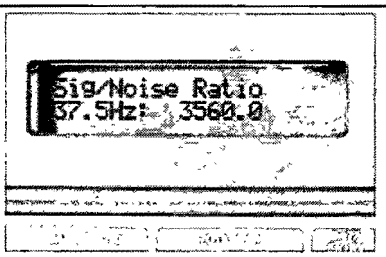

Improved SNR and signal stability by moving coil drive frequency from 5 Hz to 37 Hz.

Diagnostic in AMS

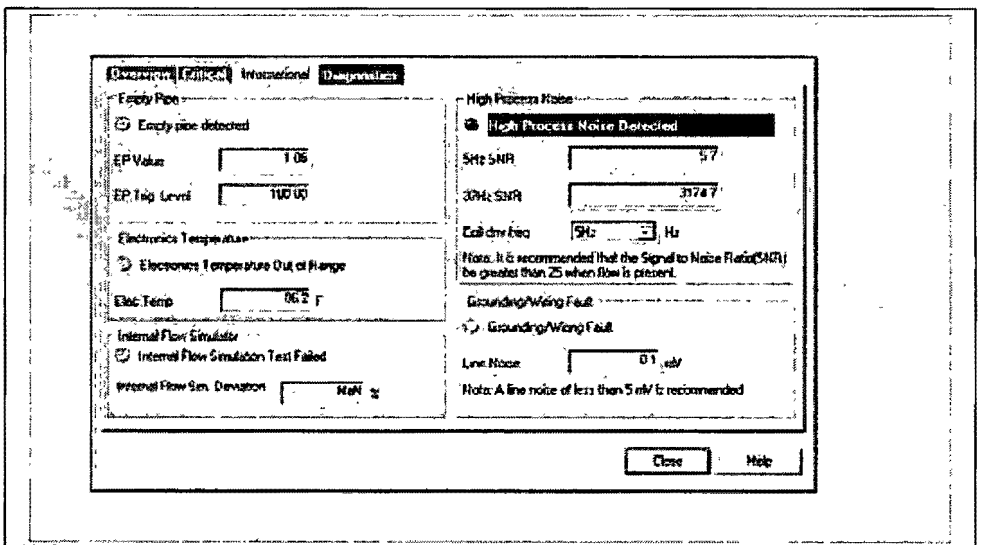

AMS status screen indicates high process noises detected and shows SNR at both coil drive frequencies.

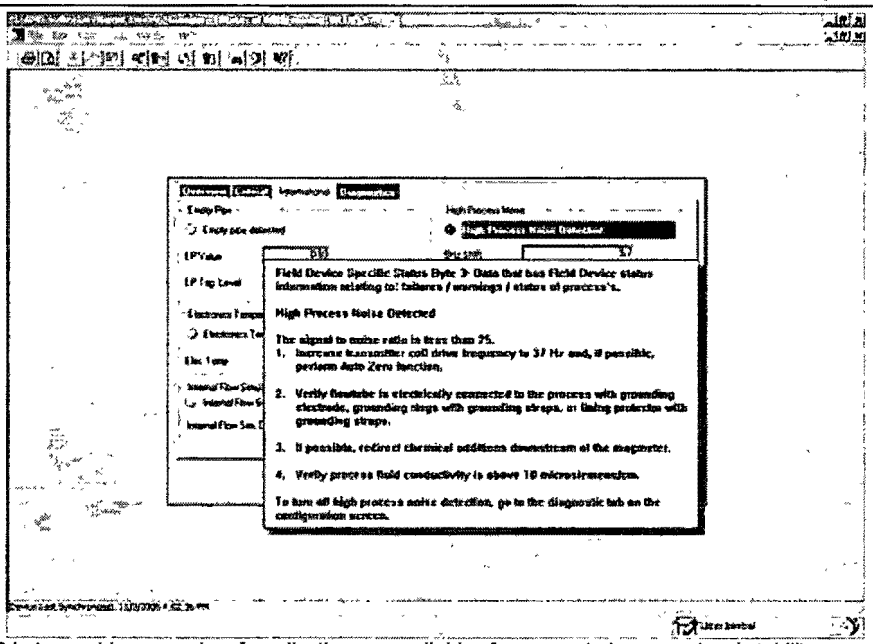

AMS help provides procedure for adjusting mag coil drive frequency to improve signal stability.

Rosemount 8700 Series Product Specifications Overview

Listed below are tables that outline some of the basic performance, physical, and functional specifications of the Rosemount 8700 Series Magnetic Flowmeter products. Table 1 provides an overview of the Rosemount 8700 Series Transmitter products. Table 2 provides an overview of the Rosemount 8700 Series Flowtube Sensor products.

TABLE 1. Rosemount 8700 Series Transmitter Specifications

	Model	Base Accuracy(1)	Mounting	Power Supply	User Interface	Communication Protocol	Diagnostics	Flowtube Sensor Compatibility	Page for Detailed Specifications	Page for Ordering Information
	8732E	0.25% Standard 0.15% High Accuracy Option	Integral or Remote	Global AC or DC	4 Optical Switch LOI	HART	**Basic plus Optional DA1 and DA2 Suite**	All Rosemount plus other manufacturers	page 10	page 65
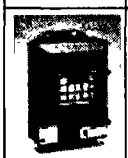	8712D	0.25% Standard 0.15% High Accuracy Option	Remote	Global AC or DC	**Dedicated 15 Button LOI**	HART	Basic plus optional DA1 Suite	All Rosemount plus other manufacturers	page 15	page 67
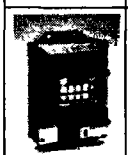	8712H	0.5% Standard 0.25% High Accuracy Option	Remote	**115 V AC**	Dedicated 15 Button LOI	HART	Basic	**8707 Only**	page 15	page 68
	8742C	0.3% Standard 0.2% High Accuracy Option	Integral or Remote	Global AC or DC	Display Only	**FOUNDATION fieldbus**	Basic plus Optional D01 Suite	All Rosemount	page 20	page 69

(1) For complete accuracy specifications, please refer to the transmitter detailed specifications.

TABLE 2. Rosemount 8700 Series Flowtube Sensor Specifications

	Model	Style	Base Accuracy[1]	Line Sizes	Coil Drive Power	Design Features	Page for Detailed Specifications	Page for Ordering Information
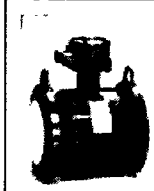	8705	Flanged	0.25% Standard 0.15% High Accuracy Option	0.5 to 36 in. (15 to 900 mm)	Pulsed DC	Standard Process Design	page 23	page 71
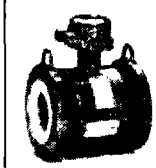	8707	High-Signal (Flanged)	0.5% Standard 0.25% High Accuracy Option	3 to 36 in. (15 to 900 mm)	**High-Signal Pulsed DC**	Superior signal stability for Noisy Applications	page 23	page 76
	8711	Wafer	0.25% Standard 0.15% High Accuracy Option	0.15 to 8 in. (4 to 200 mm)	Pulsed DC	**Compact, Light Weight**	page 28	page 79
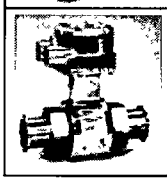	8721	Hygienic	0.5% Standard 0.25% High Accuracy Option	0 5 to 4 in. (15 to 100 mm)	Pulsed DC	**3-A and EHEDG CIP/SIP**	page 30	page 81

(1) For complete accuracy specifications, please refer to the flowtube sensor detailed specifications.

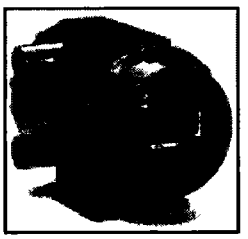

Rosemount 8732E Transmitter Specifications

Functional Specifications

Flowtube Sensor Compatibility

Compatible with Rosemount 8705, 8711, 8721, and 570TM flowtube sensors. Compatible with Rosemount 8707 flowtube sensor with D2 Dual calibration option. Compatible with AC and DC powered flowtube sensors of other manufacturers.

Compatible with Rosemount 8707 flowtube sensor with D2 Dual Calibration Option.

Compatible with AC and DC powered flowtube sensors of other manufacturers.

Flowtube Sensor Coil Resistance

350 Ω maximum

Flow Rate Range

Capable of processing signals from fluids that are traveling between 0.04 and 39 ft/s (0.01 to 12 m/s) for both forward and reverse flow in all flowtube sensor sizes. Full scale continuously adjustable between –39 and 39 ft/s (–12 to 12 m/s).

Conductivity Limits

Process liquid must have a conductivity of 5 microsiemens/cm (5 micromhos/cm) or greater for 8732E. Excludes the effect of interconnecting cable length in remote mount transmitter installations.

Power Supply

90 -250 V AC ±10%, 50–60 Hz or 12-42 V DC

AC Power Supply Requirements

Units powered by 90-250 V AC have the following power requirements.

DC Supply Current Requirements

Units powered by 12-42 V DC power supply may draw up to 1 amp of current steady state.

FIGURE 1. DC Current Requirements

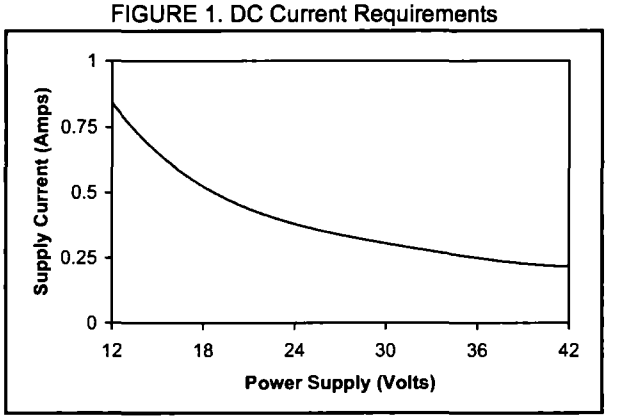

DC Load Limitations (Analog Output)

Maximum loop resistance is determined by the voltage level of the external power supply, as described by:

FIGURE 2. DC Load Limitations

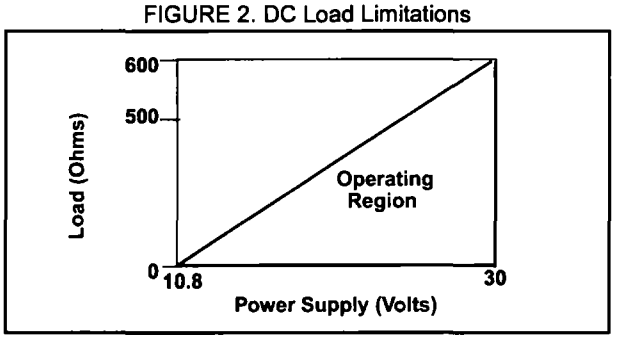

R_{max} = 31.25 (V_{ps} – 10.8)
V_{ps} = Power Supply Voltage (Volts)
R_{max} = Maximum Loop Resistance (Ohms)

NOTE
HART Communication requires a minimum loop resistance of 250 ohms.

Installation Coordination

Installation (overvoltage) Category II

Power Consumption

10 watts maximum

Switch-on current

AC: Maximum 26 A (< 5 ms) at 250 V AC

DC: Maximum 30 A (< 5 ms) at 42 V DC

Ambient Temperature Limits

Operating

–58 to 165 °F (–50 to 74 °C) without local operator interface

13 to 149 °F (–25 to 65 °C) with local operator interface

Storage

–40 to 185 °F (–40 to 85 °C)

–22 to 176 °F (–30 to 80 °C) with local operator interface

Humidity Limits

0–100% RH to 150 °F (65 °C)

Enclosure Rating

NEMA 4X CSA Type 4X, IEC 60529, IP66 (transmitter), Pollution Degree 2

Output Signals

Analog Output Adjustment(1)

4–20 mA, switch-selectable as internally or externally powered 10 to 30 V DC; 0 to 600 Ω load.

Engineering units—lower and upper range values are user-selectable.

Output automatically scaled to provide 4 mA at lower range value and 20 mA at upper range value. Full scale continuously adjustable between -39 and 39 ft/s (-12 to 12 m/sec), 1 ft/s (0.3 m/s) minimum span.

HART Communications, digital flow signal, superimposed on 4–20 mA signal, available for control system interface. 250 Ω required for HART communications.

Scalable Frequency Adjustment(1)

0-10,000 Hz, switch-selectable as internally or externally powered 10 to 30 V DC, transistor switch closure up to 5.75 w. Pulse value can be set to equal desired volume in selected engineering units. Pulse width adjustable from 0.5 to 100 m/s. Local operator interface automatically calculates and displays maximum allowable output frequency.

(1) For transmitters with intrinsically safe outputs, power must be supplied externally.

Optional Digital Output Function

Externally powered at 5 to 24 V DC, transistor switch closure up to 3 W to indicate either:

Reverse Flow:
Activates switch closure output when reverse flow is detected. The reverse flow rate is displayed.

Zero Flow:
Activates switch closure output when flow goes to 0 ft/s.

Empty Pipe:
Activates switch closure output when empty pipe is detected.

Transmitter Fault:
Activates switch closure output when a transmitter fault is detected.

Optional Digital Input Function

Externally powered at 5 to 24 V DC, transistor switch closure up to 3 W to indicate either:

Net Total Reset:
Resets the net totalizer value to zero.

Positive Zero Return (PZR):
Simulates zero-flow condition.

Security Lockout

Security lockout switch on the electronics board can be set to deactivate all LOI and HART-based communicator functions to protect configuration variables from unwanted or accidental change.

Display Lockout

All optical switches on the display can be locked locally from the display layout configuration screen by holding the upper right optical switch for 10 seconds. The display can be reactivated holding the same switch for 10 seconds.

Output Testing

Analog Output Test
Transmitter may be commanded to supply a specified current between 3.5 and 23 mA.

Pulse Output Test
Transmitter may be commanded to supply a specified frequency between 1 and 10,000 Hz.

Turn-on Time

5 minutes to rated accuracy from power up; 5 seconds from power interruption.

Start-up Time

50 ms from zero flow.

Low Flow Cutoff

Adjustable between 0.01 and 38.37 ft/s (0.003 and 11.7 m/s). Below selected value, output is driven to the zero flow rate signal level.

Overrange Capability

Signal output will remain linear until 110% of upper range value or 44 ft/s (13 m/s). The signal output will remain constant above these values. Out of range message displayed on LOI and the HART Communicator.

Damping

Adjustable between 0 and 256 seconds.

Flowtube Sensor Compensation

Rosemount flowtube sensors are flow-calibrated and assigned a calibration factor at the factory. The calibration factor is entered into the transmitter, enabling interchangeability of flowtube sensors without calculations or a compromise in standard accuracy.

8732E transmitters and other manufacturer's flowtube sensors can be calibrated at known process conditions or at the Rosemount NIST-Traceable Flow Facility. Transmitters calibrated on site require a two-step procedure to match a known flow rate. This procedure can be found in the Operations Manual 00809-0100-4662.

Diagnostics

Basic
Self test
Transmitter faults
Analog output test
Pulse output test
Tunable empty pipe
Reverse flow
Coil circuit fault
Electronics temperature

Advanced (DA1 Suite)
Ground/wiring fault
High process noise

Advanced (DA2 Suite)
8714i Calibration Verification
4-20 mA loop verification

Performance Specifications

(System specifications are given using the frequency output and with the unit at reference conditions.)

Accuracy

Includes the combined effects of linearity, hysteresis, repeatability, and calibration uncertainty.

Rosemount 8732E with 8705/8707 Flowtube Sensor:
Standard system accuracy is ±0.25% of rate ±1.0 mm/sec from 0.04 to 6 ft/s (0.01 to 2 m/s); above 6 ft/s (2 m/s), the system has an accuracy of ±0.25% of rate ±1.5 mm/sec.

Optional high accuracy is ±0.15% of rate ±1.0 mm/sec from 0.04 to 13 ft/s (0.01 to 4 m/s); above 13 ft/s (4 m/s), the system has an accuracy of ±0.18% of rate.(1)

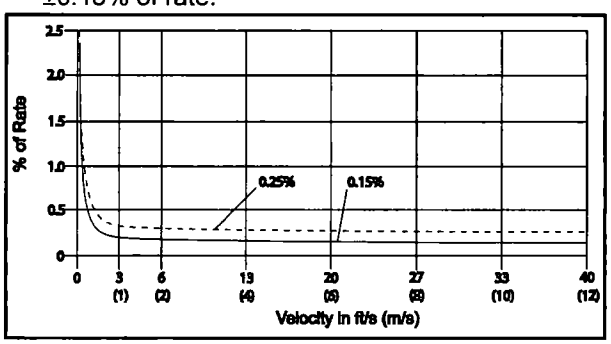

Rosemount 8732E with 8711 Flowtube Sensor:
Standard system accuracy is ±0.25% of rate ±2.0 mm/sec from 0.04 to 39 ft/s (0.01 to 12 m/s).

Optional high accuracy is ±0.15% of rate ±1.0 mm/sec from 0.04 to 13 ft/s (0.01 to 4 m/s); above 13 ft/s (4 m/s), the system has an accuracy of ±0.18% of rate.

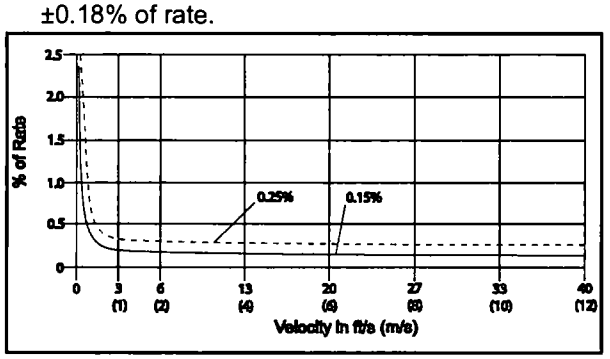

Rosemount 8732E with 8721 Flowtube Sensor:
Standard system accuracy is ±0.5% of rate from 1 to 39 ft/s (0.3 to 12 m/s); between 0.04 and 1.0 ft/s (0.01 and 0.3 m/s), the system has an accuracy of ±0.005 ft/s (0.0015 m/s).

Optional high accuracy is ±0.25% of rate from 3 to 39 ft/s (1 to 12 m/s).

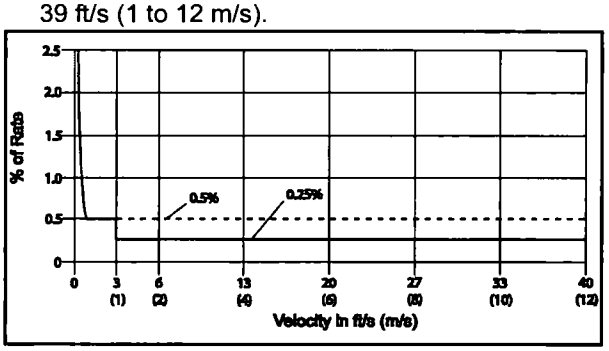

Rosemount 8732E with Legacy 8705 Flowtube Sensors:
Standard system accuracy is ±0.5% of rate from 1 to 39 ft/s (0.3 to 12 m/s); between 0.04 and 1.0 ft/s (0.01 and 0.3 m/s), the system has an accuracy of ±0.005 ft/s (0.0015 m/s).

Rosemount 8732E with Legacy 8711 Flowtube Sensors:
Standard system accuracy is ±0.5% of rate from 3 to 39 ft/s (1 to 12 m/s); between 0.04 and 3.0 ft/s (0.01 and 1 m/s), the system has an accuracy of ±0.015 ft/s (0.005 m/s).

Rosemount 8732E with Other Manufacturers' Flowtube Sensors:
When calibrated in the Rosemount Flow Facility, system accuracies as good as 0.5% of rate can be attained.

There is no accuracy specification for other manufacturers' flowtube sensors calibrated in the process line.

Analog Output Effect

Analog output has the same accuracy as frequency output plus an additional ±4μA.

Vibration Effect

IEC 60770-1

Repeatability

±0.1% of reading

(1) For Flowtube Sensor sizes greater than 12 in. (300 mm) the high accuracy is ±0.25% of rate from 3 to 39 ft/sec (1 to 12 m/sec).

Response Time (Analog Output)

50 ms maximum response time to step change in input

Stability

±0.1% of rate over six months

Ambient Temperature Effect

±0.25% change over operating temperature range

EMC Compliance

EN61326-1 1997 + A1/A2/A3 (Industrial) electromagnetic compatibility (EMC) for process and laboratory apparatus.

Physical Specifications

Materials of Construction

Housing
Low copper aluminum, NEMA 4X and IEC 60529 IP66

Pollution Degree 2

Paint
Polyurethane

Cover Gasket
Rubber

Electrical Connections

Two ½–14 NPT connections provided on the transmitter housing (optional third connection available). PG13.5 and CM20 adapters are available. Screw terminals provided for all connections. Power wiring connected to transmitter only. Integrally mounted transmitters are factory wired to the flowtube sensor.

Transmitter Weight

Approximately 7 pounds (3.2 kg). Add 1 pound (0.5 kg) for Option Code M4.

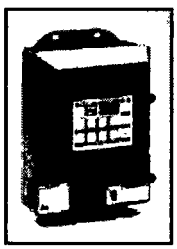

Rosemount 8712D/H Transmitter Specifications

Functional Specifications

Flowtube Sensor Compatibility

8712D: Compatible with Rosemount 8705, 8711, 8721, and 570TM flowtube sensors. Compatible with Rosemount 8707 flowtube sensor with D2 Dual calibration option. Compatible with AC and DC powered flowtube sensors of other manufacturers.

8712H: Only compatible with 8707 High-Signal flowtube sensor.

Flowtube Sensor Coil Resistance

Rosemount 8712D: 350 Ω maximum

Rosemount 8712H: 12 Ω maximum

Flow Rate Range

8712D: Capable of processing signals from fluids that are traveling between 0.01 and 39 ft/s (0 to 12 m/s) for both forward and reverse flow in all flowtube sensor sizes. Full scale continuously adjustable between –39 and 39 ft/s (–12 to 12 m/s).

8712H: Capable of processing signals from fluids that are traveling between 0.04 and 30 ft/s (0.01 to 10 m/s) for both forward and reverse flow in all flowtube sensor sizes. Full scale continuously adjustable between –30 and 30 ft/s (–10 to 10 m/s).

Conductivity Limits

Process liquid must have a conductivity of 5 microsiemens/cm (5 micromhos/cm) or greater for Rosemount 8712D. Process liquid must have a conductivity of 50 microsiemens/cm (50 micromhos/cm) for the 8712H. Excludes the effect of interconnecting cable length in remote mount transmitter installations.

Power Supply

Rosemount 8712D: 90-250 V AC ±10%, 50–60 Hz or 12–42 V DC

Rosemount 8712H: 115 V AC ±10%, 50–60 Hz

DC Load Limitations (Analog Output)

Maximum loop resistance is determined by the voltage level of the external power supply, as described by:

FIGURE 3. DC Load Limitations

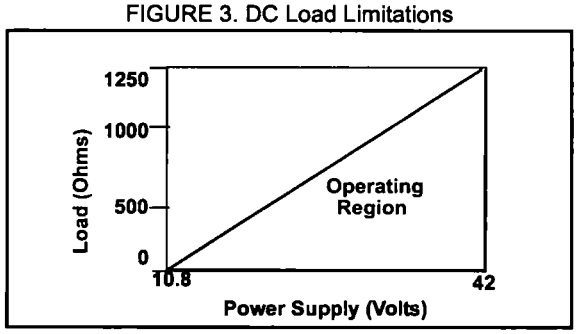

R_{max} = $41.7(V_{ps} - 10.8)$

V_{ps} = Power Supply Voltage (Volts)

R_{max} = Maximum Loop Resistance (Ohms)

NOTE
HART Communication requires a minimum loop resistance of 250 ohms.

Supply Current Requirements (8712D)

Units powered by 12-42 V DC power supply may draw up to 1 amp of current steady state.

FIGURE 4. DC Current Requirements

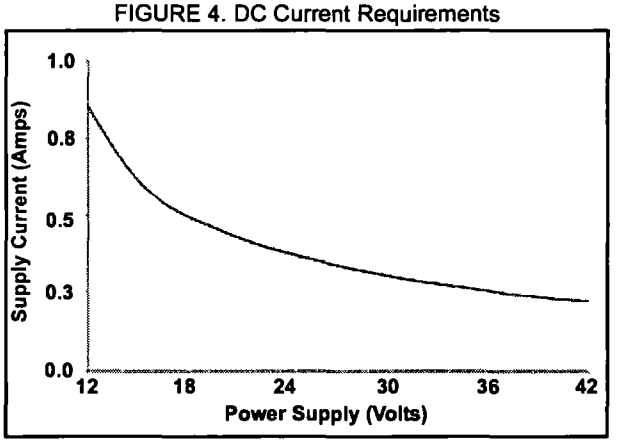

Installation Coordination

Installation (overvoltage) Category II

Power Consumption

8712D: 10 watts maximum

8712H: 300 watts maximum

Ambient Temperature Limits

Operating

8712D: –20 to 140°F (–29 to 60 °C) with local operator interface

–40 to 165°F (–40 to 74°C) without local operator interface

8712H: –20 to 130 °F (–29 to 54 °C) with or without local operator interface

Storage
–40 to 176 °F (–40 to 80 °C)

Humidity Limits

0–100% RH at 120 °F (49 °C), decreases linearly to 10% RH at 130 °F (54 °C)

Enclosure Ratings

Enclosure Type NEMA 4X, IP66

Output Signals

Analog Output Adjustment
4–20 mA, switch-selectable as internally or externally powered 5 to 24 V DC; 0 to 1000 Ω load.

Engineering units—lower and upper range values are user-selectable.

Output automatically scaled to provide 4 mA at lower range value and 20 mA at upper range value.

8712D:
Full scale continuously adjustable between -39 and 39 ft/s (-12 to 12 m/sec), 1 ft/s (0.3 m/s) minimum span.

8712H:
Full scale continuously adjustable between -30 and 30 ft/s (-10 to 10 m/sec), 1 ft/s (0.3 m/s) minimum span.

HART Communications, digital flow signal, superimposed on 4–20 mA signal, available for control system interface. 250 Ω required for HART communications.

Scalable Frequency Adjustment

8712D:
0-10,000Hz, externally powered at 5 to 24 V DC, transistor switch closure supports power loads up to 2W for frequencies up to 4000Hz, and 5 V DC at 0.1 W at maximum frequency of 10,000 Hz. Pulse can be set to equal desired velocity or volume in user selectable engineering units. Pulse width is adjustable from 1.5 to 500 msec, below 1.5 msec pulse width automatically switches to 50% duty cycle.

8712H:
0-1000 Hz, externally powered at 5 to 24 V DC, transistor switch closure up to 5.75 W. Pulse value can be set to equal desired volume in selected engineering units. Pulse width adjustable from 0.5 to 100 m/s. Local operator interface automatically calculates and displays maximum allowable output frequency.

Auxiliary Output Function

Externally powered at 5 to 24 V DC, transistor switch closure up to 3 W to indicate either:

Reverse Flow:
Activates switch closure output when reverse flow is detected. The reverse flow rate is displayed.

Zero Flow:
Activates switch closure output when flow goes to 0 ft/s.

Positive Zero Return (PZR)[1]
Forces outputs of the transmitter to the zero flow rate signal level. Activated by applying a contact closure.

Security Lockout

Security lockout jumper on the electronics board can be set to deactivate all LOI and HART-based communicator functions to protect configuration variables from unwanted or accidental change.

Output Testing

Analog Output Test
Transmitter may be commanded to supply a specified current between 3.75 and 23.25 mA

Pulse Output Test

8712D:
Transmitter may be commanded to supply a specified frequency between 1 pulse/ day and 10,000 Hz

8712H:
Transmitter may be commanded to supply a specified frequency between 1 and 1000 Hz

Turn-on Time

8712D:
5 minutes to rated accuracy from power up, 5 seconds from power interruption

8712H:
30 minutes to rated accuracy from power up, 5 seconds from power interruption

Start-up Time

0.2 seconds from zero flow

Low Flow Cutoff

Adjustable between 0.01 and 38.37 ft/s (0.003 and 11.7 m/s). Below selected value, output is driven to the zero flow rate signal level.

Overrange Capability

Signal output will remain linear until 110% of upper range value. The signal output will remain constant above these values. Out of range message displayed on LOI and the HART Communicator.

Damping

8712D:

Adjustable between 0.0 and 256 seconds

8712H:

Adjustable between 0.2 and 256 seconds

Flowtube Sensor Compensation

Rosemount flowtube sensors are flow-calibrated and assigned a calibration factor at the factory. The calibration factor is entered into the transmitter, enabling interchangeability of flowtube sensors without calculations or a compromise in accuracy.

8712D transmitters and other manufacturer's flowtube sensors can be calibrated at known process conditions or at the Rosemount NIST-Traceable Flow Facility. Transmitters calibrated on site require a two-step procedure to match a known flow rate. This procedure can be found in the Operations Manual 00809-0100-4661.

---

(1) PZR is internally powered on the 8712H transmitter.

Performance Specifications

(System specifications are given using the frequency output and with the unit at referenced conditions.)

Accuracy

Includes the combined effects of linearity, hysteresis, repeatability, and calibration uncertainty.

Rosemount 8712D with 8705/8707 Flowtube Sensor:
Standard system accuracy is ±0.25% of rate ±1.0 mm/sec from 0.04 to 6 ft/s (0.01 to 2 m/s); above 6 ft/s (2 m/s), the system has an accuracy of ±0.25% of rate ±1.5 mm/sec.

Optional high accuracy is ±0.15% of rate ±1.0 mm/sec from 0.04 to 13 ft/s (0.01 to 4 m/s); above 13 ft/s (4 m/s), the system has an accuracy of ±0.18% of rate.(1)

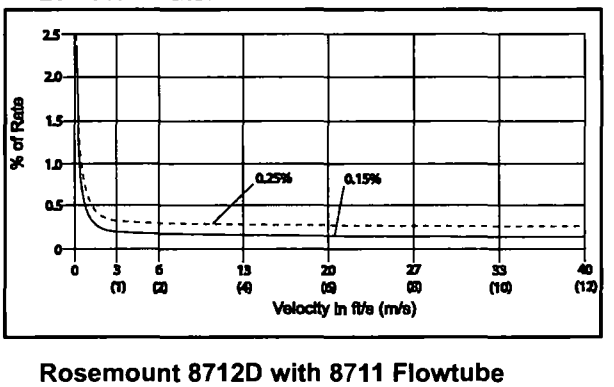

Rosemount 8712D with 8711 Flowtube Sensor:
Standard system accuracy is ±0.25% of rate ±2.0 mm/sec from 0.04 to 39 ft/s (0.01 to 12 m/s).

Optional high accuracy is ±0.15% of rate ±1.0 mm/sec from 0.04 to 13 ft/s (0.01 to 4 m/s); above 13 ft/s (4 m/s), the system has an accuracy of ±0.18% of rate.

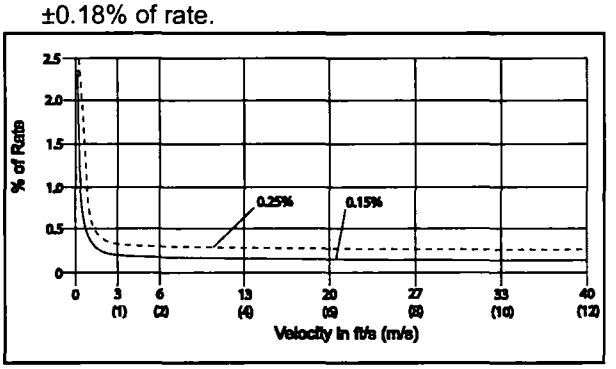

Rosemount 8712D with 8721 Flowtube Sensor:
Standard system accuracy is ±0.5% of rate from 1 to 39 ft/s (0.3 to 12 m/s); between 0.04 and 1.0 ft/s (0.01 and 0.3 m/s), the system has an accuracy of ±0.005 ft/s (0.0015 m/s).

Optional high accuracy is ±0.25% of rate from 3 to 39 ft/s (1 to 12 m/s).

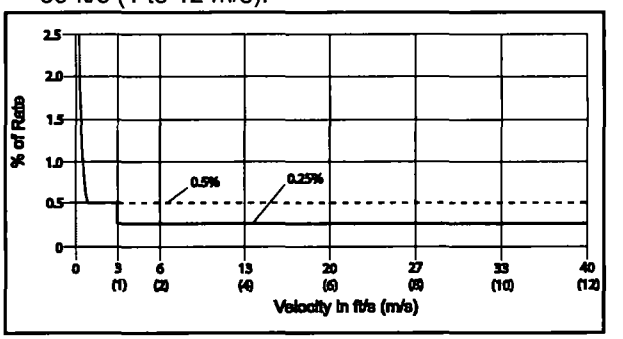

Rosemount 8712D with Legacy 8705 Flowtube Sensors:
Standard system accuracy is ±0.5% of rate from 1 to 39 ft/s (0.3 to 12 m/s); between 0.04 and 1.0 ft/s (0.01 and 0.3 m/s), the system has an accuracy of ±0.005 ft/s (0.0015 m/s).

Rosemount 8712D with Legacy 8711 Flowtube Sensors:
Standard system accuracy is ±0.5% of rate from 3 to 39 ft/s (1 to 12 m/s); between 0.04 and 3.0 ft/s (0.01 and 1 m/s), the system has an accuracy of ±0.015 ft/s (0.005 m/s).

Rosemount 8712D with Other Manufacturers' Flowtube Sensors:
When calibrated in the Rosemount Flow Facility, system accuracies as good as 0.5% of rate can be attained.

There is no accuracy specification for other manufacturers' flowtube sensors calibrated in the process line.

(1) For Flowtube Sensor sizes greater than 12 in. (300 mm) the high accuracy is ±0.25% of rate from 3 to 40 ft/sec (1 to 12 m/sec).

Rosemount 8712H with 8707 Flowtube Sensor
System accuracy is ±0.5% of rate from 3 to 30 ft/s (1 to 10 m/s); between 0.04 and 3.0 ft/s (0.01 and 0.3 m/s), the system has an accuracy of ±0.015 ft/s (0.005 m/s).

Optional high accuracy is ±0.25% of rate from 3 to 30 ft/s (1 to 10 m/s).

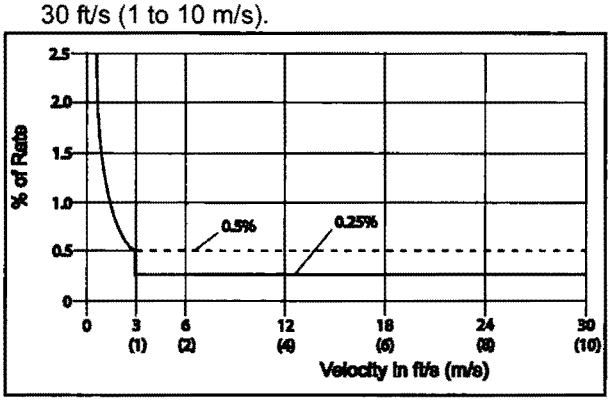

Analog Output Effect

8712D:
Analog output has the same accuracy as frequency output plus an additional 0.05% of span.

8712H:
Analog output has the same accuracy as frequency output plus an additional 0.1% of span.

Vibration Effect

±0.1% of span per SAMA PMC 31.1, Level 2

Repeatability

±0.1% of reading

Response Time

0.2 seconds maximum response to step change in input

Stability

±0.1% of rate over six months

Ambient Temperature Effect

8712D:
0.25% over operating temperature range

8712H:
±1% per 100 °F (37.8 °C)

EMC Compliance

EN61326-1 1997 + A1/A2/A3 (Industrial) electromagnetic compatibility (EMC) for process and laboratory apparatus.

Physical Specifications

Materials of Construction

Housing
Low-copper aluminum, NEMA 4X and IEC 60529 IP65

Pollution Degree 2

Paint
Polyurethane

Cover Gasket
Rubber

Electrical Connections

Four 1/2–14 NPT connections provided on the base of the transmitter. Screw terminals provided for all of the connections. Power wiring connected to the transmitter only. Remote mounted transmitters require only a single conduit connection to the flowtube sensor.

NOTE
If 3/4 - 14 NPT connections are required, 1/2 to 3/4 in. adapter kits are available for order.

Line Power Fuses

90–250 V AC systems (8712D)
2 amp, Quick-acting Bussman AGCI or equivalent

12–42 V DC systems (8712D)
3 amp, Quick-acting Bussman AGCI or equivalent

115 V AC systems (8712H)
5 amp, Quick-acting Bussman AGCI or equivalent (Rosemount 8712H only).

Transmitter Weight

Transmitter approximately 9 lb (4 kg). Add 1 lb (0.5 kg) for local operator interface.

Rosemount 8742C Transmitter Specifications

Functional Specifications

Flowtube Sensor Compatibility

Compatible with Rosemount 8705, 8711, 8721, and 570TM flowtube sensors.

Compatible with Rosemount 8707 flowtube sensor with D2 Dual Calibration Option.

Conductivity Limits

Process liquid must have a conductivity of 5 microsiemens/cm (5 micromhos/cm) or greater for 8742C. Excludes the effects of interconnecting cable length in remote mount transmitter installations.

Flowtube Sensor Coil Resistance

25 Ω maximum

Flow Rate Range

Capable of processing signals from fluids that are traveling between 0 and 39 ft/s (0 to 12 m/s) for both forward and reverse flow in all flowtube sensor sizes.

Power Supply

90–250 V AC, 50–60 Hz, 15–50 V DC

Supply Current Requirements

Units powered by 15-50 V DC power supply may draw up to 1 amp of current.

FIGURE 5. DC Current Requirements

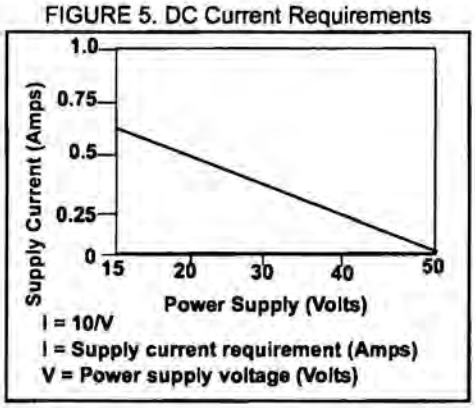

Installation Coordination

Installation (overvoltage) Category II

Power Consumption

10 watts maximum

Ambient Temperature Limits

Operating
–40 to 165 °F (–40 to 74 °C) without local display
–13 to 147 °F (–25 to 65 °C) with local display

Storage
–40 to 185 °F (–40 to 85 °C)

Humidity Limits

0–100% RH to 150 °F (65 °C)

Enclosure Rating

NEMA 4X CSA Type 4X, IEC 60529, IP66 (transmitter), Pollution Degree 2

Output Signal

Manchester-encoded digital signal that conforms to IEC 1158-2 and ISA 50.02

FOUNDATION fieldbus Specifications

Schedule Entries

Seven (7)

Links

Twenty (20)

Virtual Communications Relationships (VCRs)

One (1) predefined (F6, F7) Nineteen (19) configurable (see Table 1)

TABLE 3. Block Information

Block	Execution Time (Milliseconds)
Resource (RB)	—
Transducer (TB)	—
Analog Input (AI)	15
Proportional/Integral/ Derivative (PID)	25
Integrator (INT)	20
Arithmetic (AR)	20

Reverse Flow

Detects and reports reverse flow

Software Lockout

A write-lock switch and software lockout are provided in the resource function block.

Turn-on Time

30 minutes to rated accuracy from power up; 10 seconds communication from power interruption

Start-up Time

0.2 seconds from zero flow

Low Flow Cutoff

Adjustable between 0 and 1 ft/s. Below selected value, output is driven to the zero flow rate.

Overrange Capability

Signal output continues to 110% of upper range value setting, then remains constant. Messages are supplied to the fieldbus network.

Damping

Adjustable between 0 and 255 seconds

Performance Specifications

(System specifications are given using the unit at referenced conditions.)

Accuracy

Includes the combined effects of linearity, hysteresis, repeatability, and calibration uncertainty.

Rosemount 8742C with 8705/8707 Flowtube Sensor:
Standard system accuracy is ±0.3% of rate ±1.0 mm/sec from 0.04 to 39 ft/s (0.01 to 12 m/s).

Optional high accuracy is ±0.2% of rate ±1.0 mm/sec from 0.04 to 39 ft/s (0.01 to 12 m/s)(1).

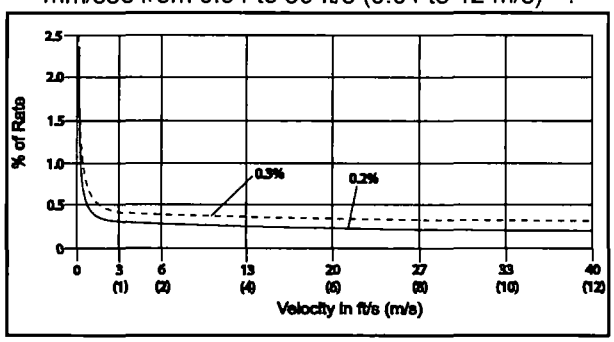

Rosemount 8742C with 8711 Flowtube Sensor:
Standard system accuracy is ±0.3% of rate ±2.0 mm/sec from 0.04 to 39 ft/s (0.01 to 12 m/s).

Optional high accuracy is ±0.2% of rate ±1.0 mm/sec from 0.04 to 39 ft/s (0.01 to 12 m/s).

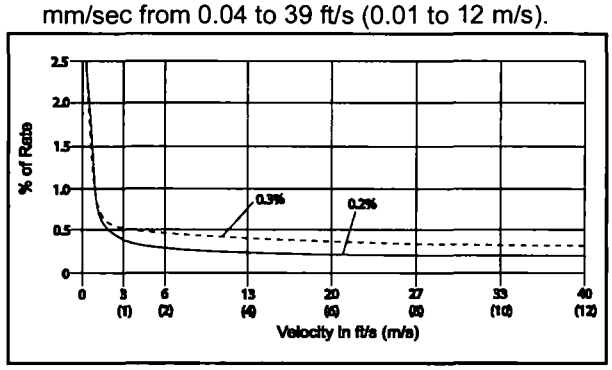

(1) For Flowtube Sensor sizes greater than 12 in. (300 mm) the high accuracy is ±0.25% of rate from 3 to 40 ft/sec (1 to 12 m/sec).

Rosemount 8742C with 8721 Flowtube Sensor:
Standard system accuracy is ±0.5% of rate from 1 to 39 ft/s (0.3 to 12 m/s); between 0.04 and 1.0 ft/s (0.01 and 0.3 m/s), the system has an accuracy of ±0.005 ft/s (0.0015 m/s).

Optional high accuracy is ±0.25% of rate from 3 to 39 ft/s (1 to 12 m/s).

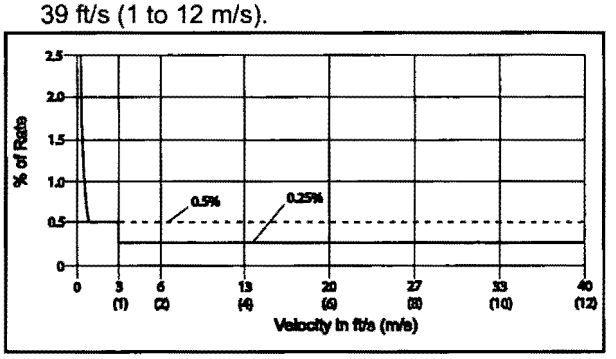

Rosemount 8742C with Legacy 8705 Flowtube Sensors:
Standard system accuracy is ±0.5% of rate from 1 to 39 ft/s (0.3 to 12 m/s); between 0.04 and 1.0 ft/s (0.01 and 0.3 m/s), the system has an accuracy of ±0.005 ft/s (0.0015 m/s).

Rosemount 8742C with Legacy 8711 Flowtube Sensors:
Standard system accuracy is ±0.5% of rate from 3 to 39 ft/s (1 to 12 m/s); between 0.04 and 3.0 ft/s (0.01 and 1 m/s), the system has an accuracy of ±0.015 ft/s (0.005 m/s).

Vibration Effect

IEC 60770-1

Repeatability

±0.1% of reading

Response Time

0.2 seconds maximum response to step change in input

Stability

±0.1% of rate over six months

Ambient Temperature Effect

±0.25% of rate over operating temperature range

EMC Compliance

EN61326-1 1997 + A1/A2/A3 (Industrial) electromagnetic compatibility (EMC) for process and laboratory apparatus.

Transient Protection

The 8742C transmitter prevents damage to the flowmeter from transients compliant to:

IEC 61000 – 4-4 (for burst currents)
IEC 61000 – 4-5 (for surge currents)

Mounting Position Effect

None when installed to ensure flowtube sensor remains full

Physical Specifications

Materials of Construction (Transmitter)

Housing
Low-copper aluminum

Paint
Polyurethane

Cover Gasket
Rubber

Electrical Connections

Two $^{3}/_{4}$–14 NPT with number 8 screw terminal connections are provided for electrical wiring. PG13.5 and CM20 adapters are available. Screw terminals provided for all connections. Power wiring connected to transmitter only. Integrally mounted transmitters are factory wired to the flowtube sensor.

Mounting

Integrally mounted transmitters do not require interconnecting cables. The local display and transmitter can be rotated in 90° increments. Remote mounted transmitters require only a single conduit connection to the flowtube sensor.

Weight

Approximately 7 pounds (3.2 kg). Add 0.5 pounds (0.5 kg) for local display.

Rosemount 8705 Flanged and 8707 High-Signal Flanged Flowtube Sensors Specifications

Functional Specifications

Service

Conductive liquids and slurries

Line Sizes

1/2–36 in. (15–900 mm) for Rosemount 8705

3–36 in. (80–600 mm) for Rosemount 8707

Interchangeability

Rosemount 8705 Flowtube Sensors are interchangeable with 8712D, 8732, and 8742C Transmitters. Rosemount 8707 High-Signal Flowtube Sensors are interchangeable with 8712H High-Signal Transmitters. System accuracy is maintained regardless of line size or optional features. Each flowtube sensor nameplate has a sixteen-digit calibration number that can be entered into a transmitter through the Local Operator Interface (LOI) or the HART Communicator on the 8712D and the 8732E. In a FOUNDATION fieldbus environment, the 8742C can be configured using the DeltaV™ fieldbus configuration tool or another FOUNDATION fieldbus configuration device. No further calibration is necessary.

Upper Range Limit

39 ft/s (12 m/s)

Process Temperature Limits

PTFE Lining
–20 to 350 °F (–29 to 177 °C)

ETFE Lining
–20 to 300 °F (–29 to 149 °C)

PFA Lining
-20 to 350 °F (-29 to 177°C)

Polyurethane Lining
0 to 140 °F (–18 to 60 °C)

Neoprene Lining
0 to 185 °F (–18 to 85 °C)

Linatex Lining
0 to 158 °F (–18 to 70°C)

Ambient Temperature Limits

–30 to 150 °F (–34 to 65 °C)

Pressure Limits

See Table 4 and Table 6

Vacuum Limits

PTFE Lining
Full vacuum to 350 °F (177 °C) through 4-in. (100 mm) line sizes. Consult factory for vacuum applications with line sizes of 6 inches (150 mm) or larger.

All Other Standard Flowtube Sensor Lining Materials
Full vacuum to maximum material temperature limits for all available line sizes.

Submergence Protection

IP68. Continuous submergence to 30 ft. (10 m). Requires conduit entries of the flowtube sensor remote junction box be properly sealed to prevent water ingress. This requires the user to install sealed IP68 approved cable glands, conduit connections, or conduit plugs.

Conductivity Limits

Process liquid must have a conductivity of 5 microsiemens/cm (5 micromhos/cm) or greater for 8705. Process liquid must have a conductivity of 50 microsiemens/cm (50 micromhos/cm) for 8707 when used with 8712H, 5 microsiemens/cm when used with other transmitters. Excludes the effect of interconnecting cable length in remote mount transmitter installations.

TABLE 4. Temperature vs. Pressure Limits[1]

Flowtube Sensor Temperature vs. Pressure Limits for ASME B16.5 Class Flanges (1/2- to 36-in. line sizes) [2]					
		Pressure			
Flange Material	Flange Rating	@ -20 to 100 °F (-29 to 38 °C)	@ 200 °F (93 °C)	@ 300 °F (149 °C)	@ 350 °F (177 °C)
Carbon Steel	Class 150	285 psi	260 psi	230 psi	215 psi
	Class 300	740 psi	675 psi	655 psi	645 psi
	Class 600 [3]	1000 psi	800 psi	700 psi	650 psi
	Class 600 [4]	1480 psi	NA	NA	NA
	Class 900	2220 psi			
304 Stainless Steel	Class 150	275 psi	235 psi	205 psi	190 psi
	Class 300	720 psi	600 psi	530 psi	500 psi
	Class 600 [5]	1000 psi	800 psi	700 psi	650 psi
	Class 600 [6]	1440 psi	NA	NA	NA
	Class 900	2160 psi			

(1) Liner temperature limits must also be considered. Polyurethane, Linatex, and Neoprene have temperature limits of 140 °F (60 °C), 158 °F (70 °C), and 185°F (85 °C), respectively.

(2) 30- and 36-in. AWWA C207 Table 5 Class D rated to 150 psi at atmospheric temperature.

(3) Option Code C6

(4) Option Code C7

(5) Option Code S6

(6) Option Code S7

TABLE 5. Temperature vs. Pressure Limits [1]

Flowtube Sensor Temperature vs. Pressure Limits for AS2129 Table D and E Flanges (4- to 24-in. line sizes)					
		Pressure			
Flange Material	Flange Rating	@ -200 to 50 °F (-320 to 122 °C)	@ 100 °F (212 °C)	@ 150°F (302 °C)	@ 200 °F (392 °C)
Carbon Steel	D	101.6 psi	101.6 psi	101.6 psi	94.3 psi
	E	203.1 psi	203.1 psi	203.1 psi	188.6 psi

(1) Liner temperature limits must also be considered. Polyurethane, Linatex, and Neoprene have temperature limits of 140 °F (60 °C), 158 °F (70 °C), and 185°F (85 °C), respectively.

TABLE 6. Temperature vs. Pressure Limits [1]

Flowtube Sensor Temperature vs. Pressure Limits for DIN Flanges (15 to 600 mm line sizes)					
		Pressure			
Flange Material	Flange Rating	@ -196 to 50 °C (-320 to 122 °F)	@ 100 °C (212 °F)	@ 150°C (302 °F)	@ 175°C (347 °F)
Carbon Steel	PN 10	10 bar	10 bar	9.7 bar	9.5 bar
	PN 16	16 bar	16 bar	15.6 bar	15.3 bar
	PN 25	25 bar	25 bar	24.4 bar	24.0 bar
	PN 40	40 bar	40 bar	39.1 bar	38.5 bar
304 Stainless Steel	PN 10	9.1 bar	7.5 bar	6.8 bar	6.5 bar
	PN 16	14.7 bar	12.1 bar	11.0 bar	10.6 bar
	PN 25	23 bar	18.9 bar	17.2 bar	16.6 bar
	PN 40	36.8 bar	30.3 bar	27.5 bar	26.5 bar

(1) Liner temperature limits must also be considered. Polyurethane, Linatex, and Neoprene have temperature limits of 140°F, 158°F, and 185°F, respectively.

Performance Specifications

(System specifications are given using the frequency output and with the unit at referenced conditions.)

Accuracy

Includes the combined effects of linearity, hysteresis, repeatability, and calibration uncertainty.

Rosemount 8705/8707 with 8732E and 8712D:
Standard system accuracy is ±0.25% of rate ±1.0 mm/sec from 0.04 to 6 ft/s (0.01 to 2 m/s); above 6 ft/s (2 m/s), the system has an accuracy of ±0.25% of rate ±1.5 mm/sec.

Optional high accuracy is ±0.15% of rate ±1.0 mm/sec from 0.04 to 13 ft/s (0.01 to 4 m/s); above 13 ft/s (4 m/s), the system has an accuracy of ±0.18% of rate.(1)

Rosemount 8742C with 8705/8707 Flowtube Sensor:
Standard system accuracy is ±0.3% of rate ±1.0 mm/sec from 0.04 to 39 ft/s (0.01 to 12 m/s).

Optional high accuracy is ±0.2% of rate ±1.0 mm/sec from 0.04 to 39 ft/s (0.01 to 12 m/s)(1).

Rosemount 8707 with 8712H:
System accuracy is ±0.5% of rate from 3 to 30 ft/s (1 to 10 m/s); between 0.04 and 3.0 ft/s (0.01 and 0.3 m/s), the system has an accuracy of ±0.005 ft/s (0.0015 m/s).

Vibration Effect

IEC 60770-1

Mounting Position Effect

None when installed to ensure flowtube sensor remains full

(1) *For Flowtube Sensor sizes greater than 12 in. (300 mm) the high accuracy is ±0.25% of rate from 3 to 40 ft/sec (1 to 12 m/sec).*

Physical Specifications

Non-Wetted Materials

Flowtube Sensor
AISI Type 304 SST (optional 316L SST)

Flanges
Carbon steel, AISI Type 304/304L SST, or Type 316/316L SST

Housing
Welded steel

Paint
Polyurethane

Process Wetted Materials

Lining
PFA, PTFE, ETFE, polyurethane, neoprene, Linatex

Electrodes
316L SST, Nickel Alloy 276 (UNS N10276), tantalum, 80% platinum-20% iridium, titanium

Process Connections

ASME B16.5 (ANSI) Class 150, Class 300, Class 600, or Class 900
0.5- to 30-in. (Class 150)

0.5- to 24-in. (Class 300)

0.5- to 10-in. (Class 600 derated to 1000 psi max)

1- to 8-in. (Full rated Class 600 and 900)

AWWA C207 Table 3 Class D
30 and 36 in.

EN 1092 (DIN) PN 10, 16, 25, and 40
PN10: Not available for flange sizes from 15 to 150 mm

PN16: Not available for flange sizes from 15 to 80 mm

PN 25: Not available for flange sizes from 15 to 150 mm

PN40: Available for all flange sizes

AS 2129 Table D and E
0.5 to 36 in.

Electrical Connections

Two ½–14 NPT connections with number 8 screw terminals are provided in the terminal enclosure for electrical wiring.

Grounding Electrode

An optional grounding electrode can be installed similarly to the measurement electrodes through the flowtube sensor lining on 8705 flowtube sensors. It is available in all electrode materials.

Grounding Rings

Optional grounding rings can be installed between the flange and the tube face on both ends of the flowtube sensor. Single ground rings can be installed on either end of the flowtube sensor. They have an I.D. slightly smaller than the flowtube sensor I.D. and an external tab to attach ground wiring. Grounding rings are available in 316L SST, Nickel Alloy 276 (UNS N10276), titanium, and tantalum.

Lining Protectors

Optional lining protectors can be installed between the flange and the tube face on both ends of the flowtube sensor. The leading edge of lining material is protected by the lining protector; lining protectors cannot be removed once they are installed. Lining protectors are available in 316L SST, Nickel Alloy 276 (UNS N10276), and titanium.

Dimensions

See Figure 9, Figure 10, and Figure 12 and Table 16, Table 19, and Table 20.

Weight

See Table 7 and Table 8

TABLE 7. Flowtube Sensor Weight (ASME)

Nominal Line Size[1] Inches (mm)	Flowtube Sensor Flange Rating		Flowtube Sensor Weight lb (kg)
	ASME B16.5 (ANSI)	EN 1092-1 (DIN)	
½ (15)	150	PN 40	20 (9)
½ (15)	300		22 (10)
1 (25)	150	PN 40	20 (9)
1 (25)	300		22 (10)
1½ (40)	150	PN 40	22 (10)
1½ (40)	300		24 (11)
2 (50)	150	PN 40	26 (12)
2 (50)	300		28 (13)
3 (80)	150	PN 40	40 (18)
3 (80)	300		47 (21)
4 (100)	150	PN 16	48 (22)
4 (100)	300		65 (30)
6 (150)	150	PN 16	81 (37)
6 (150)	300		93 (42)
8 (200)	150	PN 10	110 (50)
8 (200)	300		162 (74)
10 (250)	150	PN 10	220 (98)
10 (250)	300		300 (136)
12 (300)	150	PN 10	330 (150)
12 (300)	300		435 (197)
14 (350)	150	PN 10	370 (168)
16 (400)	150	PN 10	500 (227)
18 (450)	150	PN 10	600 (272)
20 (500)	150	PN 10	680 (308)
24 (600)	150	PN 10	1,000 (454)
30 (750)	125	-	1,747 (792)
36 (900)	125	-	1,975 (898)

(1) 30- and 36-in. AWWA C207 Table 2 Class D rated to 150 psi at atmospheric temperature.

TABLE 8. Flowtube Sensor weights (AS2129)

Nominal Line Size Inches (mm)	AS2129	Flowtube Sensor Weight lb (kg)
4 (100)	D	33 (15)
4 (100)	E	37 (17)
6 (150)	D	66 (30)
6 (150)	E	71 (32)
8 (200)	D	86 (39)
8 (200)	E	88 (40)
10 (250)	D	187 (85)
10 (250)	E	201 (91)
12 (300)	D	273 (124)
12 (300)	E	284 (129)
14 (350)	D	293 (133)
14 (350)	E	317 (144)
16 (400)	D	386 (175)
16 (400)	E	430 (195)
18 (450)	D	516 (234)
18 (450)	E	569 (258)
20 (500)	D	569 (258)
20 (500)	E	626 (284)
24 (600)	D	855 (388)
24 (600)	E	974 (442)

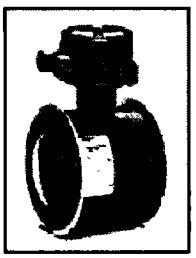

Rosemount 8711 Wafer Flowtube Sensor Specifications

SPECIFICATIONS

Functional Specifications

Service

Conductive liquids and slurries

Line Sizes

0.15 in. through 8 in. (4 through 200 mm)

Interchangeability

Rosemount 8711 Flowtube Sensors are interchangeable with 8732E, 8712D and 8742C Transmitters. System accuracy is maintained regardless of line size or optional features. Each flowtube sensor nameplate has a sixteen-digit calibration number that can be entered into a transmitter through the Local Operator Interface (LOI) or the HART Communicator on the Rosemount 8712D and the 8732E. In a FOUNDATION fieldbus environment, the 8742C can be configured using the DeltaV fieldbus configuration tool or another FOUNDATION fieldbus configuration device. No further calibration is necessary.

Upper Range Limit

39 ft/s (12 m/s)

Process Temperature Limits

ETFE Lining
-20 to 300 °F (–29 to 149 °C) for 0.5- through 8-in. (15–200 mm) line sizes

PTFE Lining
-20 to 350 °F (-29 to 177 °C)

PFA Lining
-20 to 200 °F (-29 to 93 °C)

Ambient Temperature Limits

–30 to 150 °F (–34 to 65 °C)

Maximum Safe Working Pressure at 100 °F (38 °C)

ETFE Lining
Full vacuum to 740 psi (5.1 MPa) for 0.5- through 8-in.
(15 through 200 mm) flowtube sensors

PTFE Lining
Full vacuum through 4-in. (100 mm) line sizes. Consult factory for vacuum applications with line sizes of 6 inches (150 mm) or larger.

PFA Lining
Full vacuum to 285 psi (1.96 MPa) for 0.15- and 0.30-in. (4 and 8 mm) flowtube sensors

Conductivity Limits

Process liquid must have a conductivity of 5 microsiemens/cm (5 micromhos/cm) or greater for 8711. Excludes the effect of interconnecting cable length in remote mount transmitter installations.

Performance Specifications

(System specifications are given using the frequency output and with the unit at referenced conditions.)

Accuracy

Rosemount 8711 with 8732E and 8712D:
Standard system accuracy is ±0.25% of rate ±2.0 mm/sec from 0.04 to 39 ft/s (0.01 to 12 m/s).

Optional high accuracy is ±0.15% of rate ±1.0 mm/sec from 0.04 to 13 ft/s (0.01 to 4 m/s); above 13 ft/s (4 m/s), the system has an accuracy of ±0.18% of rate.

Rosemount 8742C with 8711 Flowtube Sensor:
Standard system accuracy is ±0.3% of rate ±2.0 mm/sec from 0.04 to 39 ft/s (0.01 to 12 m/s).

Optional high accuracy is ±0.2% of rate ±1.0 mm/sec from 0.04 to 39 ft/s (0.01 to 12 m/s).

Vibration Effect

IEC 60770-1

Mounting Position Effect

No effect when installed to ensure flowtube sensor remains full

Physical Specifications

Non-Wetted Materials

Flowtube Sensor
303 SST (ASTM A-743)

Coil Housing
Investment cast steel (ASTM A-27)

Paint
Polyurethane

Process-Wetted Materials

Lining
ETFE, PTFE and PFA

Electrodes
316L SST, Nickel Alloy 276 (UNS N10276), tantalum,
80% platinum—20% iridium, titanium

Process Connections

Mounts between these Flange Configurations
ASME B16.5 (ANSI): Class 150, 300

EN 1092 (DIN): PN 10 and 25

BS: 10 Table D, E, and F

Studs, Nuts, and Washers[1]
ASME B16.5 (ANSI)

0.15- through 1-in. (4 through 25 mm):
316 SST, ASTM A193, Grade B8M, Class 1 threaded mounting studs; ASTM A194, Grade 8M heavy hex nuts; SAE per ANSI B18.2.1, Type A, Series N flat washers.

1.5- through 8-in. (40 through 200 mm):
CS, ASTM A193, Grade B7, Class 1 threaded mounting studs; ASTM A194, Grade 2H heavy hex nuts; SAE per ANSI B18.2.1, Type A, Series N flat washers; all items clear, chromate zinc-plated.

EN 1092 (DIN)

4 through 25 mm (0.15- through 1-in.):
316 SST ASTM A193, Grade B8M Class 1 threaded mounting studs; ASTM A194, Grade 8M, DIN 934 H=D, metric heavy hex nuts; 316 SST, A4, DIN 125 flat washers.

40 through 200 mm (1.5- through 8-in.):
CS, ASTM A193, Grade B7 threaded mounting studs; ASTM A194, Grade 2H, DIN 934 H=D, metric heavy hex nuts; CS, DIN 125 flat washers; all items yellow zinc-plated.

Electrical Connections

Two $^1/_2$–14 NPT connections with number 8 screw terminals are provided in the terminal enclosure for electrical wiring.

Grounding Electrode

An optional grounding electrode can be installed similarly to the measurement electrodes through the flowtube sensor lining. It is available in all electrode materials.

Grounding Rings

Optional grounding rings can be installed between the flange and the tube face on both ends of the flowtube sensor. They have an I.D. slightly smaller than the flowtube sensor I.D. and an external tab to attach ground wiring. Grounding rings are available in 316L SST, Nickel Alloy 276 (UNS N10276), titanium, and tantalum.

Dimensions and Weight

See Figure 11, Figure 12, and Table 21

(1) 0.15 and 0.30 in. (4 and 80 mm) flowtube sensors mount between $^1/_2$-in. flange.

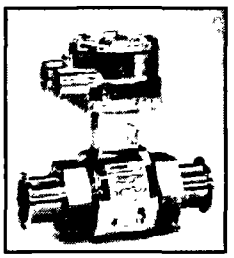

Rosemount 8721 Sanitary Flowtube Sensor Specifications

Functional Specifications

Service

Conductive liquids and slurries

Line Sizes

1/2 - 4 in. (15–100 mm)

Flowtube Sensor Compatibility and Interchangeability

The Rosemount 8721 Flowtube Sensors are interchangeable with Rosemount 8732, 8742, and 8712D transmitters. System accuracy is maintained regardless of line size or optional features.

Each flowtube sensor nameplate has a sixteen-digit calibration number that can be entered into the transmitter through the Local Operator Interface (LOI) or the HART Communicator. No further calibration is necessary.

Flowtube Sensor Compensation

Rosemount flowtube sensors are flow-calibrated and assigned a calibration factor at the factory. The calibration factor is entered into the transmitter, enabling interchangeability of flowtube sensors without calculations or a compromise in accuracy.

Conductivity Limits

Process liquid must have a conductivity of 5 microsiemens/cm (5 micromhos/cm) or greater. Excludes the effect of interconnecting cable length in remote mount transmitter installations.

Flowtube Sensor Coil Resistance

5Ω to 10Ω (line size dependent)

Flow Rate Range

Capable of processing signals from fluids that are traveling between 0.04 and 39 ft/s (0.01 to 12 m/s) for both forward and reverse flow in all flowtube sensor sizes. Full scale continuously adjustable between –39 and 39 ft/s (–12 to 12 m/s).

Flowtube Sensor Ambient Temperature Limits

14 to 140 °F (–15 to 60 °C)

Process Temperature Limits

PFA Lining
-20 to 350 °F (-29 to 177 °C)

Pressure Limits

Line Size	Max Working Pressure	CE Mark Max. Working Pressure
1/2 (15)	300 psi (20.7 bar)	300 psi (20.7 bar)
1 (25)	300 psi (20.7 bar)	300 psi (20.7 bar)
1 1/2 (40)	300 psi (20.7 bar)	300 psi (20.7 bar)
2 (50)	300 psi (20.7 bar)	300 psi (20.7 bar)
2 1/2 (65)	300 psi (20.7 bar)	240 psi (16.5 bar)
3 (80)	300 psi (20.7 bar)	198 psi (13.7 bar)
4 (100)	210 psi (14.5 bar)	148 psi (10.2 bar)

Vacuum Limits

Full vacuum at maximum lining material temperature; consult factory.

Submergence Protection (Flowtube Sensor)

IP68. Continuous submergence to 30 ft. (10 m). Requires conduit entries of the flowtube sensor remote junction box be properly sealed to prevent water ingress. This requires the use of sealed IP68 approved cable glands, conduit connections, or conduit plugs.

Performance Specifications

(System specifications are given using the frequency output and with the unit at referenced conditions).

Accuracy

Rosemount 8732, 8742, or 8712D with 8721 Flowtube Sensor
System accuracy is ±0.5% of rate from 1 to 39 ft/s (0.3 to 12 m/s); includes combined effects of linearity, hysteresis, repeatability, and calibration uncertainty; between 0.04 and 1.0 ft/s (0.01 and 0.5 m/s), the system has an accuracy of ±0.005 ft/s.

Repeatability

±0.1% of reading

Response Time

0.2 seconds maximum response to step change in input

Stability

±0.1% of rate over six months

Ambient Temperature Effect

±1% per 100 °F (37.8 °C)

Mounting Position Effect

None when installed to ensure flowtube sensor remains full.

Physical Specifications

Mounting

Integrally mounted transmitters are factory-wired and do not require interconnecting cables. The transmitter can rotate in 90° increments. Remote mounted transmitters require only a single conduit connection to the flowtube sensor.

Non-Wetted Materials (Flowtube Sensor)

Flowtube Sensor
304 Stainless Steel (wrapper), 304 Stainless Steel (pipe)

Terminal Junction Box
Cast aluminum, polyurethane coated
Optional: 304 Stainless Steel

Paint
Polyurethane

Weight

TABLE 9. 8721 Flowtube Sensor weight

Line Size	Flowtube Sensor Only	008721-0350 Tri-Clamp fitting (each)
0.5	4.84 lbs (2.2 kg)	0.58
1.0	4.52 (2.1 kg)	0.68
1.5	5.52 (2.5 kg)	0.88
2.0	6.78 (3.1 kg)	1.30
2.5	8.79 (2.1 kg)	1.66
3.0	13.26 (2.1 kg)	2.22
4.0	21.04 (2.1 kg)	3.28

Aluminum remote junction box
Approximately 1 pound (0.45 kg)

SST remote junction box
Approximately 2.5 pounds (1.13 kg)

Process Wetted Materials (Flowtube Sensor)

Liner
PFA with Ra < 32µinch (0.81µm)

Electrodes
316L SST with Ra < 15µ in. (0.38µ m)

Nickel Alloy 276 (UNS N10276) with Ra < 15µ in. (0.38µ m)

80% Platinum-20% Iridium with Ra < 15µ in. (0.38µm)

Process Connections

The Rosemount 8721 Sanitary Flowtube Sensor is designed using a standard IDF fitting as the basis for providing a flexible, hygienic interface for a variety of process connections. The Rosemount 8721 Flowtube Sensor has the threaded or "male" end of the IDF fitting on the ends of the base flowtube sensor. The flowtube sensor can be directly connected with user supplied IDF fittings and gaskets. If other process connections are needed, the IDF fittings and gaskets can be provided and welded directly into the sanitary process tubing, or can be supplied with adapters to standard Tri-Clamp® process connections. All connections are PED compliant for group 2 fluids.

Tri-Clamp® Sanitary Coupling

IDF Sanitary Coupling (screw type)
IDF specification per BS4825 part 4

ANSI Weld Nipple

DIN 11850 Weld Nipple

DIN 11851 (Imperial and Metric)

DIN 11864-1 form A

DIN 11864-2 form A

SMS 1145

Cherry-Burrell I-Line

Process Connection Material

316L Stainless Steel with Ra < 32µinch (0.81µm)

Optional Electropolished Surface Finish with Ra < 15µ in. (0.38µ m)

Process Connection Gasket Material

Silicone

EPDM

Viton

Electrical Connections (Flowtube Sensor)

Two 1/2–14 NPT connections with number 8 screw terminals are provided in the terminal enclosure for electrical wiring.

Flowtube Sensor Dimensions

Refer to Figure 13

NOTES

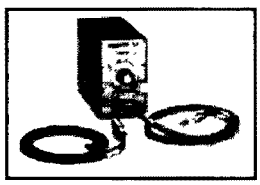

Rosemount 8714D Reference Calibration Standard Specifications

Functional Specifications

Ambient Temperature Limits

Operating
–30 to 140 °F (–34 to 60 °C)

Storage
–40 to 140 °F (–40 to 60 °C)

Humidity Limits

0 to 95% relative humidity

Performance Specifications

Accuracy

±0.05% of rate at 30 ft/s at 25°C

±0.10% of rate at 10 ft/s and 3 ft/s

Warm-up Time

30 minutes

Ambient Temperature Effect

< 0.015% of rate per 10 °F (< 0.027% per 10 °C)

Humidity Effect

No effect from 0 to 60% relative humidity < 0.10% of rate from 60 to 90% relative humidity

Long-Term Stability

< 0.10% of rate shift in one year

Physical Specifications

Electrical Connections

Electrical connections are compatible with 8712D, 8732 or 8742 terminal blocks. Not for use with the 8712H High Signal Transmitter.

Mounting

Any position is acceptable

Materials of Construction

Housing
Extruded aluminum

Covers
Stamped aluminum, silk-screened

Paint
Polyurethane

Weight
Approximately 3 lb (2 kg)

Product Certifications

Approved Manufacturing Locations

Rosemount Inc. — Eden Prairie, Minnesota, USA

Fisher-Rosemount Technologias de Flujo, S.A. de C.V. — Chihuahua Mexico

Emerson Process Management Flow — Ede, The Netherlands

EUROPEAN DIRECTIVE INFORMATION

The EC declaration of conformity for all applicable European directives for this product can be found on our website at www.rosemount.com. A hard copy may be obtained by contacting our local sales office.

ATEX Directive

Rosemount Inc. complies with the ATEX Directive.

Type n protection type in accordance with EN50 021

⚠ • Closing of entries in the device must be carried out using the appropriate EExe or EExn metal cable gland and metal blanking plug or any appropriate ATEX approved cable gland and blanking plug with IP66 rating certified by an EU approved certification body.

For Rosemount 8732E transmitters:

Complies with Essential Health and Safety Requirements:
EN 60079-0: 2006
IEC 60079-1: 2007
EN 60079-7: 2007
EN 60079-11: 2007
EN 60079-26: 2004
EN 50281-1-1: 1998 + A1

European Pressure Equipment Directive (PED) (97/23/EC)

Rosemount 8705 and 8707 Magnetic Flowmeter flowtube sensors in line size and flange combinations:

Line Size: 1 1/2 in. - 24 in. with all DIN flanges and ANSI 150 and ANSI 300 flanges. Also available with ANSI 600 flanges in limited line sizes.

Line Size: 30 in. - 36 in. with AWWA 125 flanges
QS Certificate of Assessment - EC No. PED-H-20
Module H Conformity Assessment

Rosemount 8711 Magnetic Flowmeter Flowtube Sensors
Line Sizes: 1.5, 2, 3, 4, 6, and 8 in.

QS Certificate of Assessment - EC No. PED-H-20
Module H Conformity Assessment

Rosemount 8721 Sanitary Magmeter Flowtube Sensors in line sizes of 1 1/2 in. and larger:

Module A Conformity Assessment

All other Rosemount 8705/8707/8711/8721 Flowtube Sensors — in line sizes of 1 in. and less: Sound Engineering Practice

Flowtube Sensors that are SEP are outside the scope of PED and cannot be marked for compliance with PED.

Mandatory CE-marking for flowtube sensors in accordance with Article 15 of the PED can be found on the flowtube sensor body (CE 0575).

Flowtube Sensor category I is assessed for conformity per module A procedures.

Flowtube Sensor categories II – IV, use module H for conformity assessment procedures.

Electro Magnetic Compatibility (EMC) (2004/108/EC)

Models 8712D and 8742C - EN 50081-1: 1992, EN 50082-2: 1995,
Model 8732E - EN 61326: 1997: A1 + A2 + A3

Installed signal wiring should not be run together and should not be in the same cable tray as AC power wiring.

Device must be properly grounded or earthed according to local electric codes.

To improve protection against signal interference, shielded cable is recommended.

Low Voltage Directive (93/68/EEC)

Model 8712D and Model 8742C - EN 61010 -1: 1995

Low Voltage Directive (2006/95/EC)

Model 8732E - EN 61010 -1: 2001

Other important guidelines

Only use new, original parts.

To prevent the process medium escaping, do not unscrew or remove process flange bolts, adapter bolts or bleed screws during operation.

Maintenance shall only be done by qualified personnel.

CE CE Marking

Compliance with all applicable European Union Directives. (Note: CE Marking is not available on Rosemount 8712H).

IECEx Directive

Rosemount Inc. complies with the IECEx Directive.

For Rosemount 8732E transmitters:

Complies with Essential Health and Safety Requirements:
IEC 60079-0 : 2004
IEC 60079-1 : 2007-04
IEC 60079-11 : 2006
IEC 60079-26 : 2006
IEC 60079-7 : 2006-07
IEC 61241-0 : 2004
IEC 61241-1 : 2004

HAZARDOUS LOCATIONS PRODUCT APPROVALS OFFERING

The Rosemount 8700 Series Magnetic Flowmeters offer many different hazardous locations certifications. The table below provides an overview of the available hazardous area approval options. Equivalent hazardous locations certifications for flowtube sensor and transmitter must match in integrally mounted magnetic flowmeter systems. Remote mounted magnetic flowmeter systems do not require matched hazardous location certifications. For complete information about the hazardous area approval codes listed, see Hazardous Location Certifications starting on page 38.

TABLE 10. Factory Mutual (FM) Approvals Offering

Transmitter	8732E			8712D[1]			8742C			8712H[1]
Flowtube Sensor	8705	8707	8711	8705	8707	8711	8705	8707	8711	8707
FM Category	**Hazardous Area Approval Code**									
Non-Classified Locations										
Transmitter	NA	NA	NA	NA	NA	NA	NA	NA	NA	N0
Flowtube Sensor	NA	N0	NA	NA	N0	NA	NA	N0	NA	N0
Suitable for Class I, Division 1										
Explosion-Proof										
Trans: Groups C, D T6	E5[2]	-	E5	-	-	-	E5[2]	-	E5	-
Tube: Groups C, D T6	E5[2]	-	E5	-	-	-	E5[2]	-	E5	-
Explosion-Proof with Intrinsically Safe Output										
Trans: Groups C, D T6	E5[2][3]	-	E5[3]	-	-	-	K5	-	K5	-
Tube: Groups C, D T6	E5[2]	-	E5	-	-	-	E5[2]	-	E5	-
Suitable for Class I, Division 2										
Non-Flammable Fluids										
Trans: Groups A,B,C,D T4	N0	N0	N0	N0	N0	N0	N0	N0	N0	N0
Tube: Groups A,B,C,D T5	N0	N0[4]	N0	N0	N0[4]	N0	N0	N0[4]	N0	N0[4]
Flammable Fluids										
Trans: Groups A,B,C,D T4	N5	N5	N5	N5	N5	N5	N5	N5	N5	N5
Tube: Groups A,B,C,D T5	N5	N5[4]	N5	N5	N5[4]	N5	N5	N5[4]	N5	N5[4]
Non-Flammable Fluids with Intrinsically Safe Output										
Trans: Groups A,B,C,D T4	N0[3]	N0[3]	N0[3]	-	-	-	K0	K0	K0	-
Tube: Groups A,B,C,D T5	N0	N0[4]	N0	-	-	-	N0	N0[4]	N0	-
Other Certifications	**Product Certification Code[5]**									
European Pressure Equipment Directive (PED)	PD	-	PD	PD	-	PD	PD	-	PD	-
CRN	CN	CN	CN	CN	CN	CN	CN	CN	CN	CN
NSF 61 Drinking Water[6]	DW	-	DW	DW	-	DW	DW	-	DW	-

(1) Remote Transmitter Only

(2) Available in line sizes 0.5 in. to 8 in. (15 mm to 200 mm) only

(3) For I.S. Output, Output Code B must be ordered

(4) 8707 Flowtube Sensor has Temp Code - T3C

(5) Product Certification Codes are added to the Flowtube Sensor model number only

(6) Only available with PTFE (all line sizes) or Polyurethane (4 in. or larger) Lining Materials and 316L SST Electrodes

TABLE 11. Canadian Standards Association (CSA) Approvals Offering

	Transmitter	8732E			8712D[1]			8742C			8712H[1]
	Flowtube Sensor	8705	8707	8711	8705	8707	8711	8705	8707	8711	8707
FM Category		Hazardous Area Approval Code									
Non-Classified Locations											
Transmitter		NA	-	NA	NA	-	NA	NA	-	NA	-
Flowtube Sensor		NA	-	NA	NA	-	NA	NA	-	NA	-
Suitable for Class I, Division 2											
Non-Flammable Fluids											
Trans: Groups A,B,C,D T4		N0	N0	N0	N0	N0	N0	N0	N0	N0	N0
Tube: Groups A,B,C,D T5		N0	N0[2]	N0	N0	N0[2]	N0	N0	N0[2]	N0	N0[2]
Other Certifications		Product Certification Code[3]									
European Pressure Equipment Directive (PED)		PD	-	PD	PD	-	PD	PD	-	PD	-
CRN		CN	CN	CN	CN	CN	CN	CN	CN	CN	CN
NSF 61 Drinking Water[4]		DW	-	DW	DW	-	DW	DW	-	DW	-

(1) Remote Transmitter Only

(2) 8707 Flowtube Sensor has Temp Code - T3C

(3) Product Certification Codes are added to the Flowtube Sensor model number only

(4) Only available with PTFE (all line sizes) or Polyurethane (4 in. or larger) Lining Materials and 316L SST Electrodes

TABLE 12. ATEX Approvals Offering

	Transmitter	8732E			8712D[1]			8742C			8712H[1]
	Flowtube Sensor	8705	8707	8711	8705	8707	8711	8705	8707	8711	8707
ATEX Category		Hazardous Area Approval Code									
Non-Hazardous											
Trans: LVD and EMC		NA	-	NA	NA	-	NA	NA	-	NA	-
Tube: LVD and EMC		NA	-	NA	NA	-	NA	NA	-	NA	-
Equipment Category 2											
Gas Group IIB											
Trans: Ex d IIB T6		ED	-	ED	-	-	-	ED	-	ED	-
Tube: Ex e ia IIC T3...T6		KD[2]	-	KD[2]	-	-	-	KD[2]	-	KD[2]	-
Gas Group IIC											
Trans: Ex d IIC T6		E1	-	E1	-	-	-	E1	-	E1	-
Tube: Ex e ia IIC T3...T6		E1	-	E1	-	-	-	E1	-	E1	-
Gas Group IIB with Intrinsically Safe Output											
Trans: Ex de [ia] IIB T6		ED[3]	-	ED[3]	-	-	-	KD[2]	-	KD[2]	-
Tube: Ex e ia IIC T3...T6		KD[2]	-	KD[2]	-	-	-	KD[2]	-	KD[2]	-
Gas Group IIC with Intrinsically Safe Output											
Trans: Ex de [ia] IIC T6		E1[3]	-	E1[3]	-	-	-	K1	-	K1	-
Tube: Ex e ia IIC T3...T6		E1	-	E1	-	-	-	E1	-	E1	-
Equipment Category 3											
Gas Group IIC											
Trans: Ex nA nL IIC T4		N1	-	N1	N1	-	N1	-	-	-	-
Tube: Ex nA [L] IIC T3...T6		N1	-	N1	N1	-	N1	-	-	-	-
Equipment Category 1 - Dust Environment											
Dust Environment Only											
Trans: Dust Ignition Proof		ND	-	ND	-	-	-	-	-	-	-
Tube: Dust Ignition Proof		ND	-	ND	-	-	-	-	-	-	-
Other Certifications		Product Certification Code[4]									
European Pressure Equipment Directive (PED)		PD	-	PD	PD	-	PD	PD	-	PD	-
CRN		CN	CN	CN	CN	CN	CN	CN	CN	CN	CN
NSF 61 Drinking Water[5]		DW	-	DW	DW	-	DW	DW	-	DW	-

(1) Remote Transmitter Only

(2) With integral mount transmitter, approval is valid for Gas Group IIB

(3) For I.S. Output, Output Code B must be ordered

(4) Product Certification Codes are added to the Flowtube Sensor model number only

(5) Only available with PTFE (all line sizes) or Polyurethane (4 in. or larger) Lining Materials and 316L SST Electrodes

TABLE 13. IECEx Approvals Offering

	Transmitter	8732E[1]		
	Flowtube Sensor	8705	8707	8711
IECEx Category		Hazardous Area Approval Code		
Non-Hazardous				
Trans: LVD and EMC		NA	-	NA
Tube: LVD and EMC		NA	-	NA
Equipment Category 2				
Gas Group IIB				
Trans: Ex d IIB T6		EF	-	EF
Gas Group IIC				
Trans: Ex d IIC T6		E7	-	E7
Gas Group IIB with Intrinsically Safe Output				
Trans: Ex de [ia] IIB T6		EF[2]	-	EF[3]
Gas Group IIC with Intrinsically Safe Output				
Trans: Ex de [ia] IIC T6		E1[3]	-	E1[3]
Equipment Category 3				
Gas Group IIC				
Trans: Ex nA nL IIC T4		N7	-	N7
Equipment Category 1 - Dust Environment				
Dust Environment Only				
Trans: Dust Ignition Proof		NF	-	NF
Other Certifications		Product Certification Code[3]		
European Pressure Equipment Directive (PED)		PD	-	PD
CRN		CN	CN	CN
NSF 61 Drinking Water[4]		DW	-	DW

(1) Available in remote mount configuration only. Requires equivalent ATEX approval on the flowtube sensor

(2) For I.S. Output, Output Code B must be ordered

(3) Product Certification Codes are added to the Flowtube Sensor model number only

(4) Only available with PTFE (all line sizes) or Polyurethane (4 in. or larger) Lining Materials and 316L SST Electrodes

HAZARDOUS LOCATION CERTIFICATIONS

Equivalent Hazardous Location Certifications for flowtube sensor and transmitter must match in integrally-mounted magnetic flowmeter systems. Remote-mounted systems do not require matched hazardous location certification option codes.

Transmitter Approval Information

TABLE 14. Transmitter Option Codes

Approval Codes	Rosemount 8732E	Rosemount 8712D	Rosemount 8712H	Rosemount 8742 Transmitter	
				fieldbus Output	IS fieldbus Output
NA	•	•		•	
N0	•	•	•	•	
N1	•	•			
N5	•	•	•	•	
N7	•				
ND	•				
NF	•				
E1	•			•	
E5	•			•	
E7	•				
ED	•			•	
K0					•
K1					•
K5					•
KD[1]					•

(1) Refer to Table 17 on pege 44 for relation between ambient temperature, process temperature, and temperature class.

North American Certifications
Factory Mutual (FM)

NOTE
For intrinsically safe (IS) outputs on the 8732E output option code B must be selected.
IS outputs for Class I, Division 1, Groups A, B, C, D.
Temp Code – T4 at 60°C

NOTE
For the 8732E transmitters with a local operator interface (LOI), the lower ambient temperature limit is -20 °C.

N0 Division 2 Approval (All transmitters)
Reference Rosemount Control Drawing 08742-1051 (8742C) or 08732-1052 (8732E/8742C).
Class I, Division 2, Groups A, B, C, D
Temp Codes – T4 (8712 at 40°C, 8742 at 60°C), T4 (8732 at 60°C: -50 °C ≤ Ta ≤ 60 °C)
Dust-ignition proof Class II/III, Division 1, Groups E, F, G
Temp Codes – T4 (8712 at 40°C), T5 (8732 at 60°C), T6 (8742 at 60°C)
Enclosure Type 4X

K0 Division 2 Approval with Intrinsically Safe Output (8742 Only)
Reference Rosemount Control Drawing 08742-1051
Class I, Division 2, Groups A, B, C, D with IS output for Class I, Division 1, Groups A, B, C, D.
Temp Code – T4 at 60°C
Dust-ignition proof Class II/III, Division 1, Groups E, F, G
Temp Code – T6 at 60°C
Enclosure Type 4X

K5 Explosionproof Approval with Intrinsically Safe Output (8742 only)
Reference Rosemount Control Drawing 08742-1051
Explosion-Proof for Class I, Division 1, Groups C, D with IS output for Class I, Division 1, Groups A, B, C, D.
Temp Code – T4 at 60°C
Dust-ignition proof Class II/III, Division 1, Groups E, F, G
Temp Code – T6 at 60°C
Class I, Division 2, Groups A, B, C, D
Temp Codes – T4 (8742 at 60°C)
Enclosure Type 4X

N5 Division 2 Approval (All Transmitters) For flowtube sensors with IS electrodes only
Reference Rosemount Control Drawing 08742-1051 (8742C) or 08732-1052 (8732E).
Class I, Division 2, Groups A, B, C, D
Temp Codes – T4 (8712 at 40°C, 8742 at 60°C), T4 (8732 at 60°C· -50 °C ≤ Ta ≤ 60 °C)
Dust-ignition proof Class II/III, Division 1, Groups E, F, G
Temp Codes – T4 (8712 at 40°C), T5 (8732 at 60°C), T6 (8742 at 60°C)
Enclosure Type 4X

E5 Explosion-Proof Approval (8732 and 8742 only)
Reference Rosemount Control Drawing 08732-1052
Explosion-Proof for Class I, Division 1, Groups C, D
Temp Code – T6 at 60°C
Dust-ignition proof Class II/III, Division 1, Groups E, F, G
Temp Code – T5 at 60°C
Class I, Division 2, Groups A, B, C, D
Temp Codes – T4 (8742 at 60°C), T4 (8732 at 60°C)
Enclosure Type 4X

Canadian Standards Association (CSA)

NOTE
For intrinsically safe (IS) outputs on the 8732E output option code B must be selected.
IS outputs for Class I, Division 1, Groups A, B, C, D.
Temp Code – T4 at 60°C

N0 Division 2 Approval
Reference Rosemount Control Drawing 08732-1051 (8732E or 8742C only)
Class I, Division 2, Groups A, B, C, D
Temp Codes – T4 (8732 at 60°C: -50 °C ≤ Ta ≤ 60 °C), T4 (8742 at 60°C)
Dust-ignition proof Class II/III, Division 1, Groups E, F, G
Temp Codes – T4 (8712 at 40°C), T5 (8732 at 60°C), T6 (8742 at 60°C)
Enclosure Type 4X

K0 Division 2 Approval with Intrinsically Safe Output (8742 Only)
Reference Rosemount Control Drawing 08742-1052
Class I, Division 2, Groups A, B, C, D with IS output for Class I, Division 1, Groups A, B, C, D. Temp Code – T4 at 60°C
Dust-ignition proof Class II/III, Division 1, Groups E, F, G
Temp Code – T6 at 60°C
Enclosure Type 4X

European Certifications

NOTE
For intrinsically safe (IS) outputs on the 8732E output option code B must be selected.
IS outputs for Ex de [ia] IIB or IIC T6

E1 ATEX Flameproof
Hydrogen gas group
8732 - Certificate No.: KEMA 07ATEX0073 X ⟨Ex⟩ II 2G
Ex de IIC or Ex de [ia] IIC T6 (-20°C ≤ Ta ≤ +57°C)
with LOI T6 (-20°C ≤ Ta ≤ +57°C)
8742 - Certificate No.: 03ATEX2159X ⟨Ex⟩ II 2G
EEx de IIB + H_2 T6 (-20°C ≤ Ta ≤ +65°C)
V_{max} = 250 V AC or 42 V DC
CE 0575

ED ATEX Flameproof
8732 - Certificate No.: KEMA 07ATEX0073 X ⟨Ex⟩ II 2G
Ex de IIB or Ex de [ia] IIB T6 (-20°C ≤ Ta ≤ +57°C)
with LOI T6 (-20°C ≤ Ta ≤ +57°C)
V_{max} = 250 V AC or 42 V DC
CE 0575

ND ATEX Dust
8732 - Certificate No.: KEMA 06ATEX0006 ⟨Ex⟩ II 1D
max ΔT = 40 °K(1)
Amb. Temp. Limits: (-20 °C ≤ Ta ≤ + 65 °C)
V_{max} = 250 V AC or 42 V DC
IP 66
CE 0575

SPECIAL CONDITIONS FOR SAFE USE (KEMA 07ATEX0073 X):
If the Rosemount 8732 Flow Transmitter is used integrally with the Rosemount 8705 or 8711 Flowtube Sensors, it shall be assured that the mechanical contact areas of the Flowtube Sensor and Flow Transmitter comply with the requirements for flat joints according to standard EN/IEC 60079-1 clause 5.2.

The relation between ambient temperature, process temperature, and temperature class is to be taken from the table under (15 - description) above. ***(See Table 17)***

The electrical data is to be taken from the summary under (15 - electrical data) above. ***(See Table 16)***

If the Rosemount 8732 Flow Transmitter is used integrally with the Junction Box, it shall be assured that the mechanical contact areas of the Junction Box and Flow Transmitter comply with the requirements for flanged joints according to standard EN/IEC 60079-1 clause 5.2.

Per EN60079-1: 2004 the gap of the joint between transmitter and remote junction box/flowtube sensor is less than required per table 1 clause 5.2.2, and is only approved for use with an approved Rosemount transmitter and approved junction box/flowtube sensor.

INSTALLATION INSTRUCTIONS:
The cable and conduit entry devices and blanking elements shall be of a certified flameproof type, suitable for the conditions of use and correctly installed. With the use of conduit, a certified stopping box shall be provided immediately to the entrance of the enclosure.

ED 8742 - Certificate No: KEMA03ATEX2159X ⟨Ex⟩ II 2G
EEx de IIB T6 (Ta = -20°C to +65°C)
V_{max} = 250 V AC or 50 V DC
CE 0575

K1 ATEX Flameproof with Intrinsically Safe Output (8742 only)
Certificate No.: KEMA03ATEX2159x ⟨Ex⟩ II 2G
ATEX EEx de [ia] IIC T6 (-20 °C ≤ Ta ≤ +65 °C)
V_{max} = 250 V AC or 50 V DC
CE 0575
See Table 12 for Electrical Parameters

KD ATEX Flameproof with Intrinsically Safe Output (8742 only)
Certificate No: KEMA03ATEX2159X ⟨Ex⟩ II 2G
EEx de [ia] IIB T6 (Ta = -20°C to +65°C)
V_{max} = 250 V AC or 50 V DC
CE 0575
See Table 16 for Electrical Parameters

SPECIAL CONDITIONS FOR SAFE USE (X) (03ATEX2159X):
The relation between ambient temperature, process temperature and temperature class is to be taken from the table under (15 - description) above. ***(See Table 17)***.

If the Rosemount 8742C Flow Transmitter is used integrally with the Junction Box, it shall be assured that the mechanical contact areas of the Junction Box and Flow Transmitter comply with the requirements for flanged joints according to standard EN 50018, clause 5.2.

INSTALLATION INSTRUCTIONS:
The cable and conduit entry devices and the closing elements shall be of a certified increased safety type, suitable for the conditions of use and correctly installed.

At ambient temperatures above 50°C, the flow meter shall be used with heat resistant cables with a temperature rating of at least 90°C.

A Junction Box in type of explosion protection increased safety "e" may be attached to the base of the Rosemount 8732E or 8742C Flow Transmitter, permitting remote mounting of the Rosemount 8705 and 8711 Flowtube Sensors.

Ambient temperature range of the Junction Box: -20 °C to +65 °C.

The Junction Box is classified as II 2 G Ex e IIB T6 and certified under KEMA 07ATEX0073 X and KEMA 03ATEX2052X.

(1) Max surface temperature is 40 °C above the ambient temperature conditions. Tmax = 100 °C

N1 ATEX Type n

8712D - ATEX Certificate No: BASEEFA 05ATEX0170X
EEx nA nL IIC T4 (Ta = -50 °C to + 60 °C)
V_{max} = 42 V DC
CE 0575

8732 - ATEX Certificate No: BASEEFA 07ATEX0203X
Ex nA nL IIC T4 (Ta = -50 °C to + 60 °C)
V_{max} = 42 V DC
CE 0575

Remote Junction Box

8742 - Certificate No.: KEMA 03ATEX2052x Ex II 2G
ATEX EEx e (1) T6 (Ta = -20 °C to +65 °C)
When installed per drawing 08732-1050
After de-energizing, wait 10 minutes before opening cover
CE 0575

(1) *IIB + H_2 for E1, K1*
IIB for ED, KD

8732 - Certificate No.: KEMA 07ATEX0073 X Ex II 2G
ATEX Ex e (1) T6 (Ta = -20 °C to +57 °C)
When installed per drawing 08732-1060
After de-energizing, wait 10 minutes before opening cover
CE 0575

(1) *IIC for E1*
IIB for ED

International Certifications

NOTE
For intrinsically safe (IS) outputs on the 8732E output option code B must be selected.
IS outputs for Ex de [ia] IIB or IIC T6

E7 IECEx Flameproof

8732 - Certificate No.: KEM 07.0038X
Ex de IIC or Ex de [ia] IIC T6 (-20 °C ≤ Ta ≤ +57 °C)
V_{max} = 250 V AC or 42 V DC

EF IECEx Flameproof

8732 - Certificate No.: KEM 07.0038X
Ex de IIB or Ex de [ia] IIB T6 (-20 °C ≤ Ta ≤ +57 °C)
V_{max} = 250 V AC or 42 V DC

NF IECEx Dust

8732 - Certificate No.: KEM 07.0038X
Ex tD A20 IP66 T 100 °C
T6 (-20 °C ≤ Ta ≤ +57 °C)
V_{max} = 250 V AC or 42 V DC

SPECIAL CONDITIONS FOR SAFE USE (KEM 07.0038X):
If the Rosemount 8732 Flow Transmitter is used integrally with the Rosemount 8705 or 8711 Flowtube Sensors, it shall be assured that the mechanical contact areas of the Flowtube Sensor and Flow Transmitter comply with the requirements for flat joints according to standard EN/IEC 60079-1 clause 5.2.

The relation between ambient temperature, process temperature, and temperature class is to be taken from the table under (15 - description) above. ***(See Table 17)***

The electrical data is to be taken from the summary under (15 - electrical data) above. ***(See Table 16)***

If the Rosemount 8732 Flow Transmitter is used integrally with the Junction Box, it shall be assured that the mechanical contact areas of the Junction Box and Flow Transmitter comply with the requirements for flanged joints according to standard EN/IEC 60079-1 clause 5.2.

INSTALLATION INSTRUCTIONS:
The cable and conduit entry devices and blanking elements shall be of a certified flameproof type, suitable for the conditions of use and correctly installed. With the use of conduit, a certified stopping box shall be provided immediately to the entrance of the enclosure.

N7 IECEx Type n

8712D - Certificate No: IECEx BAS 07.0036X
EEx nA nL IIC T4 (Ta = -50 °C to + 60 °C)
V_{max} = 42 V DC

8732 - Certificate No: IECEx BAS 07.0062X
Ex nA nL IIC T4 (Ta = -50 °C to + 60 °C)
V_{max} = 42 V DC

Remote Junction Box

8732 - Certificate No.: KEM 07.0038X
IECEx Ex e (1) T6 (Ta = -20 °C to + 57 °C)
When installed per drawing 08732-1070
After de-energizing, wait 10 minutes before opening cover

(1) *IIC for E7*
IIB for EF

Flowtube Sensor Approval Information

TABLE 15. Flowtube Sensor Option Codes[1]

Approval Codes	Rosemount 8705 Flowtube Sensor		Rosemount 8707 Flowtube Sensor		Rosemount 8711 Flowtube Sensor		Rosemount 8721 Flowtube Sensors
	For Non-flammable Fluids	For Flammable Fluids	For Non-flammable Fluids	For Flammable Fluids	For Non-flammable Fluids	For Flammable Fluids	For Non-flammable Fluids
NA	•						•
N0	•		•		•		
ND	•	•	•	•	•	•	•
N1	•	•			•	•	
N5	•	•	•	•	•	•	
N7	•	•			•	•	
ND	•	•			•	•	
NF	•	•			•	•	
E1	•	•			•	•	
E5[2]	•	•			•	•	
CD[3]					•	•	
KD[3]	•	•					

(1) CE Marking is standard on Rosemount 8705, 8711, and 8721. No hazardous location certifications are available on the Rosemount 570™.

(2) Available in line sizes up to 8 in. (200 mm) only.

(3) Refer to Table 17 on page 44 for relation between ambient temperature, process temperature, and temperature class.

North American Certifications

Factory Mutual (FM)

N0 Division 2 Approval for Non-Flammable Fluids (All Flowtube Sensors)

Class I, Division 2, Groups A, B, C, D
Temp Code – T5 (8705/8711 at 60°C)
Temp Code – T3C (8707 at 60°C)

Dust-Ignition proof Class II/III, Division 1, Groups E, F, G
Temp Code – T6 (8705/8711 at 60°C)
Temp Code – T3C (8707 at 60°C)

Enclosure Type 4X

N0 for 8721 Hygienic Flowtube Sensor

Factory Mutual (FM) Ordinary Location;
CE Marking; 3-A Symbol Authorization #1222;
EHEDG Type EL

N5 Division 2 Approval for Flammable Fluids (All Flowtube Sensors)

Class I, Division 2, Groups A, B, C, D
Temp Code – T5 (8705/8711 at 60°C)
Temp Code – T3C (8707 at 60°C)

Dust-Ignition proof Class II/III, Division 1, Groups E, F, G
Temp Code – T6 (8705/8711 at 60°C)
Temp Code – T3C (8707 at 60°C)

Enclosure Type 4X

E5 Explosion-Proof (8705 and 8711 Only)

Explosion-Proof for Class I, Division 1, Groups C, D
Temp Code – T6 at 60°C

Dust-Ignition proof Class II/III, Division 1, Groups E, F, G
Temp Code – T6 at 60°C

Class I, Division 2, Groups A, B, C, D
Temp Code – T5 at 60°C

Enclosure Type 4X

Canadian Standards Association (CSA)

N0 Suitable for Class I, Division 2, Groups A, B, C, D
Temp Code – T5 (8705/8711 at 60°C)
Temp Code – T3C (8707 at 60°C)

Dust-Ignition proof Class II/III, Division 1, Groups E, F, G

Enclosure Type 4X

N0 for 8721 Hygienic Flowtube Sensor

Canadian Standards Association (CSA) Ordinary Location;
CE Marking; 3-A Symbol Authorization #1222;
EHEDG Type EL

European Certifications

ND ATEX Dust

8732 - Certificate No.: KEMA 06ATEX0006 Ⓔx II 1D max
T = 40 °K(1) Amb. Temp. Limits: (-20 °C = Ta = +65 °C)
Vmax = 40 V DC (pulsed)
IP 66
CE 0575

N1 ATEX Non-Sparking/Non-incendive (8705/8711 Only)
Certificate No: KEMA02ATEX1302X Ⓔx II 3G
EEx nA [L] IIC T3... T6
Ambient Temperature Limits -20 to 65°C

SPECIAL CONDITIONS FOR SAFE USE (X):
The relation between ambient temperature, process temperature and temperature class is to be taken from the table under (15-description) above. - (See Table 13) The electrical data is to be taken from the summary under (15-electrical data above). (See Table 12)

E1, ATEX Increased Safety (Zone 1)

CD with IS Electrodes (8711 only)
Certificate No: KEMA03ATEX2052X Ⓔx II 1/2G
EEx e ia IIC T3 . T6 (Ta = -20 to +60°) (See Table 17)
CE 0575
V_{max} = 40 V DC (pulsed)

SPECIAL CONDITIONS FOR SAFE USE (X):
If the Rosemount 8732 Flow Transmitter is used integrally with the Rosemount 8705 or Rosemount 8711 Flowtube Sensors, it shall be assured that the mechanical contact areas of the Flowtube Sensor and Flow Transmitter comply with the requirements for flat joints according to standard EN 50018, clause 5.2. The relation between ambient temperature, process temperature and temperature class is to be taken from the table under (15-description) above. - (See Table 11) The electrical data is to be taken from the summary under (15-electrical data above). (See Table 12)

INSTALLATION INSTRUCTIONS:
At ambient temperature above 50°C, the flowmeter shall be used with heat resistant cables with a temperature rating of at least 90°C.

A fuse with a rating of maximum 0,7 A according to IEC 60127-1 shall be included in the coil excitation circuit if the flowtube sensors are used with other flow transmitters (e.g. Rosemount 8712).

E1, ATEX Increased Safety (Zone 1)

KD with IS Electrodes (8705 only)
Certificate No. KEMA 03ATEX2052X Ⓔx II 1/2G
EEx e ia IIC T3... T6 (Ta = -20 to 60°C) (See Table 17)
CE 0575
V_{max} = 40 V DC (pulsed)

SPECIAL CONDITIONS FOR SAFE USE (X):
If the Rosemount 8732 Flow Transmitter is used integrally with the Rosemount 8705 or Rosemount 8711 Flowtube Sensors, it shall be assured that the mechanical contact areas of the Flowtube Sensor and Flow Transmitter comply with the requirements for flat joints according to standard EN 50018, clause 5.2 The relation between ambient temperature, process temperature and temperature class is to be taken from the table under (15-description) above. - (See Table 11) The electrical data is to be taken from the summary under (15-electrical data above). (See Table 12)

INSTALLATION INSTRUCTIONS:
At ambient temperature above 50°C, the flowmeter shall be used with heat resistant cables with a temperature rating of at least 90°C.

A fuse with a rating of maximum 0,7 A according to IEC 60127-1 shall be included in the coil excitation circuit if the flowtube sensors are used with other flow transmitters (e.g. Rosemount 8712).

TABLE 16. Electrical Data

Rosemount 8732 Flow Transmitter	
Power supply:	250 V AC, 1 A or 50 Vdc, 2,5 A, 20 W maximum
Pulsed output circuit:	30 V DC (pulsed), 0,25 A, 7,5 W maximum
4-20 mA output circuit:	30 V DC, 30 mA, 900 mW maximum
Rosemount 8705 and 8711 Flowtube Sensors	
Coil excitation circuit:	40 V DC (pulsed), 0,5 A, 20 W maximum
Electrode circuit:	in type of explosion protection intrinsic safety EEx ia IIC, U_i = 5 V, I_i = 0.2 mA, P_i = 1 mW, U_m = 250 V
Rosemount 8742C Flow Transmitter (EEx de version):	
Power supply:	250 V AC, 1 A, 40 VA or 50 Vdc, 2,5 A, 15 W maximum
Foundation fieldbus output:	30 V DC, 30 mA, 1 W maximum
Rosemount 8742C Flow Transmitter (EEx de [ia] version):	
Power supply:	250 V AC, 1 A, 40 VA or 50 V DC, 2,5 A, 15 W maximum
Foundation fieldbus output: (terminals + and -)	in type of explosion protection intrinsic safety EEx, only for connection to a certified intrinsically safe circuit, with the following maximum values:
	U_i = 30 V
	I_i = 380 mA
	P_i = 5,32 W
	C_i = 4,4 nF
	L_i = 0 mH

TABLE 17. Relation between ambient temperature, process temperature, and temperature class[1]

Meter Size (Inches)	Maximum Ambient Temperature	Maximum Process Temperature	Temperature Class
1/2	115°F (65°C)	239°F (115°C)	T3
1	149°F (65°C)	248°F (120°C)	T3
1	95°F (35°C)	95°F (35°C)	T4
1 1/2	149°F (65°C)	257°F (125°C)	T3
1 1/2	122°F (50°C)	148°F (60°C)	T4
2	149°F (65°C)	257°F (125°C)	T3
2	149°F (65°C)	167°F (75°C)	T4
2	104°F (40°C)	104°F (40°C)	T5
3 - 36	149°F (65°C)	266°F (130°C)	T3
3 - 36	149°F (65°C)	194°F (90°C)	T4
3 - 36	131°F (55°C)	131°F (55°C)	T5
3 - 36	104°F (40°C)	104°F (40°C)	T6
6	115°F (65°C)	275°F(135°C)	T3
6	115°F (65°C)	230°F (110°C)	T4
6	115°F (65°C)	167°F (75°C)	T5
6	140°F (60°C)	140°F (60°C)	T6
8-60	115°F (65°C)	284°F (140°C)	T3
8-60	115°F (65°C)	239°F (115°C)	T4
8-60	115°F (65°C)	176°F (80°C)	T5
8-60	115°F (65°C)	156°F (69°C)	T6

(1) This table is applicable for CD and KD option codes only.

TABLE 18. Relation between the maximum ambient temperature, the maximum process temperature, and the temperature class[1]

Maximum Ambient Temperature	Maximum process temperature °F (°C) per temperature class			
	T3	T4	T5	T6
0.5 in. flowtube sensor size				
149°F (65°C)	297°F (147°C)	138°F (59°C)	54°F (12°C)	18°F (-8°C)
140°F (60°C)	309°F (154°C)	151°F (66°C)	66°F (19°C)	28°F (-2°C)
131°F (55°C)	322°F (161°C)	163°F (73°C)	79°F (26°C)	41°F (5°C)
122°F (50°C)	334°F (168°C)	176°F (80°C)	90°F (32°C)	54°F (12°C)
113°F (45°C)	347°F (175°C)	189°F (87°C)	102°F (39°C)	66°F (19°C)
104°F (40°C)	351°F (177°C)	199°F (93°C)	115°F (46°C)	79°F (26°C)
95°F (35°C)	351°F (177°C)	212°F (100°C)	127°F (53°C)	90°F (32°C)
86°F (30°C)	351°F (177°C)	225°F (107°C)	138°F (59°C)	102°F (39°C)
77°F (25°C)	351°F (177°C)	237°F (114°C)	151°F (66°C)	115°F (46°C)
68°F (20°C)	351°F (177°C)	248°F (120°C)	163°F (73°C)	127°F (53°C)
1.0 in. flowtube sensor size				
149°F (65°C)	318°F (159°C)	158°F (70°C)	72°F (22°C)	34°F (1°C)
140°F (60°C)	331°F (166°C)	171°F (77°C)	84°F (29°C)	46°F (8°C)
131°F (55°C)	343°F (173°C)	183°F (84°C)	97°F (36°C)	59°F (15°C)
122°F (50°C)	351°F (177°C)	196°F (91°C)	109°F (43°C)	72°F (22°C)
113°F (45°C)	351°F (177°C)	207°F (97°C)	122°F (50°C)	84°F (29°C)
104°F (40°C)	351°F (177°C)	219°F (104°C)	135°F (57°C)	97°F (36°C)
95°F (35°C)	351°F (177°C)	232°F (111°C)	145°F (63°C)	109°F (43°C)
86°F (30°C)	351°F (177°C)	244°F (118°C)	158°F (70°C)	122°F (50°C)
77°F (25°C)	351°F (177°C)	257°F (125°C)	171°F (77°C)	135°F (57°C)
68°F (20°C)	351°F (177°C)	270°F (132°C)	183°F (84°C)	145°F (63°C)
1.5 in. flowtube sensor size				
149°F (65°C)	297°F (147°C)	160°F (71°C)	88°F (31°C)	55°F (13°C)
140°F (60°C)	307°F (153°C)	171°F (77°C)	97°F (36°C)	66°F (19°C)
131°F (55°C)	318°F (159°C)	181°F (83°C)	108°F (42°C)	77°F (25°C)
122°F (50°C)	329°F (165°C)	192°F (89°C)	118°F (48°C)	88°F (31°C)
113°F (45°C)	340°F (171°C)	203°F (95°C)	129°F (54°C)	97°F (36°C)
104°F (40°C)	351°F (177°C)	214°F (101°C)	140°F (60°C)	108°F (42°C)
95°F (35°C)	351°F (177°C)	223°F (106°C)	151°F (66°C)	118°F (48°C)
86°F (30°C)	351°F (177°C)	234°F (112°C)	160°F (71°C)	129°F (54°C)
77°F (25°C)	351°F (177°C)	244°F (118°C)	171°F (77°C)	140°F (60°C)
68°F (20°C)	351°F (177°C)	255°F (124°C)	181°F (83°C)	151°F (66°C)

Continued on Next Page

TABLE 18. Relation between the maximum ambient temperature, the maximum process temperature, and the temperature class[1]

Maximum Ambient Temperature	Maximum process temperature °F (°C) per temperature class			
	T3	T4	T5	T6
2.0 in. flowtube sensor size				
149°F (65°C)	289°F (143°C)	163°F (73°C)	95°F (35°C)	66°F (19°C)
140°F (60°C)	300°F (149°C)	172°F 78(°C)	104°F (40°C)	75°F (24°C)
131°F (55°C)	309°F (154°C)	183°F (84°C)	115°F (46°C)	84°F (29°C)
122°F (50°C)	318°F (159°C)	192°F (89°C)	124°F (51°C)	95°F (35°C)
113°F (45°C)	329°F (165°C)	201°F (94°C)	135°F (57°C)	104°F (40°C)
104°F (40°C)	338°F (170°C)	212°F (100°C)	144°F (62°C)	115°F (46°C)
95°F (35°C)	349°F (176°C)	221°F (105°C)	153°F (67°C)	124°F (51°C)
86°F (30°C)	351°F (177°C)	232°F (111°C)	163°F (73°C)	135°F (57°C)
77°F (25°C)	351°F (177°C)	241°F (116°C)	172°F (78°C)	144°F (62°C)
68°F (20°C)	351°F (177°C)	252°F (122°C)	183°F (84°C)	153°F (67°C)
3 to 60 in. flowtube sensor size				
149°F (65°C)	351°F (177°C)	210°F (99°C)	117°F (47°C)	75°F (24°C)
140°F (60°C)	351°F (177°C)	223°F (106°C)	129°F (54°C)	90°F (32°C)
131°F (55°C)	351°F (177°C)	237°F (114°C)	144°F (62°C)	102°F (39°C)
122°F (50°C)	351°F (177°C)	250°F (121°C)	156°F (69°C)	117°F (47°C)
113°F (45°C)	351°F (177°C)	264°F (129°C)	171°F (77°C)	129°F (54°C)
104°F (40°C)	351°F (177°C)	266°F (130°C)	183°F (84°C)	144°F (62°C)
95°F (35°C)	351°F (177°C)	266°F (130°C)	198°F (92°C)	156°F (69°C)
86°F (30°C)	351°F (177°C)	266°F (130°C)	203°F (95°C)	171°F (77°C)
77°F (25°C)	351°F (177°C)	266°F (130°C)	203°F (95°C)	176°F (80°C)
68°F (20°C)	351°F (177°C)	266°F (130°C)	203°F (95°C)	176°F (80°C)

(1) This table is applicable for N1 option codes only.

Dimensional Drawings

FIGURE 6. Rosemount 8732E Transmitter

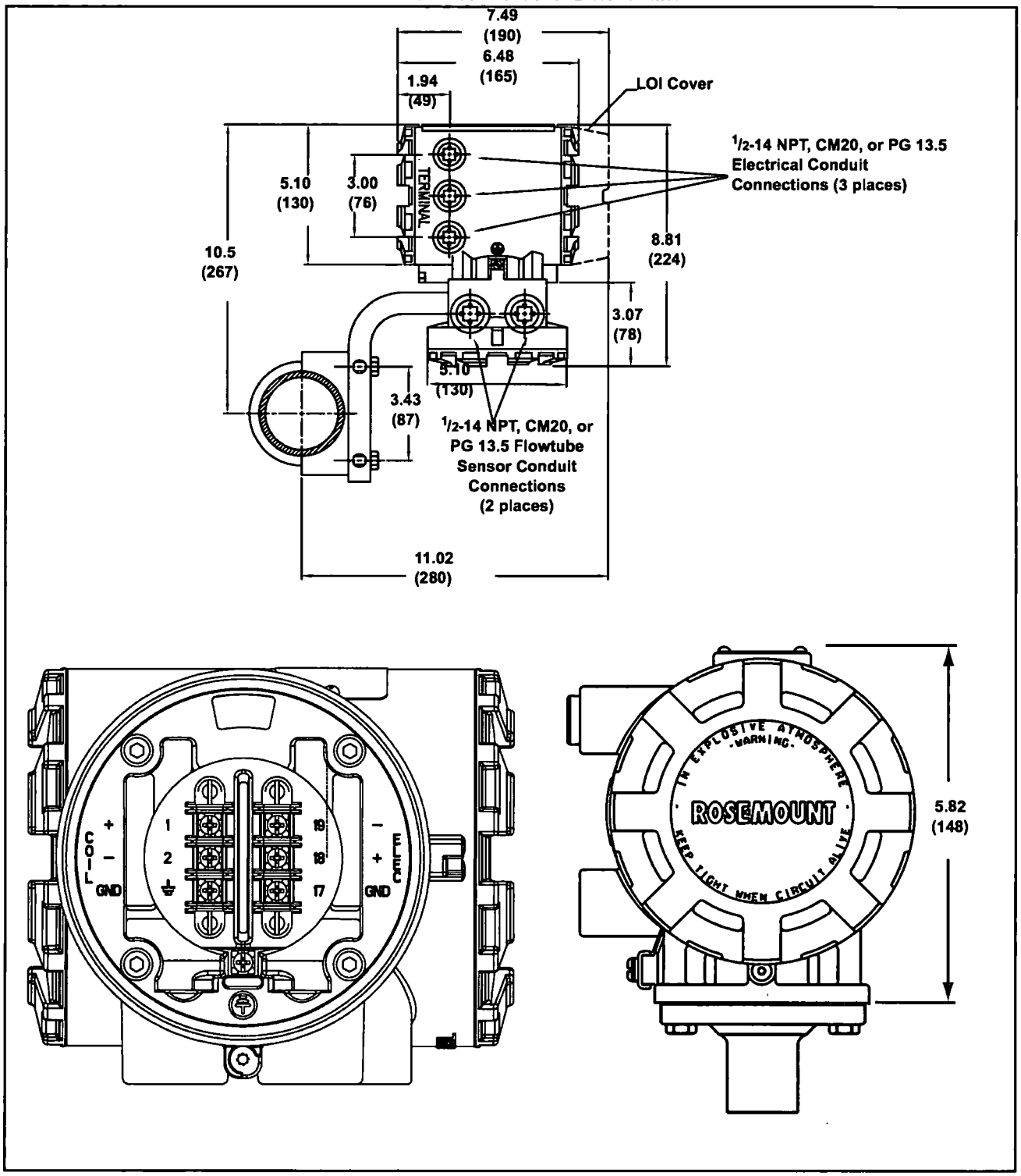

FIGURE 7. Rosemount 8712D/H Transmitter

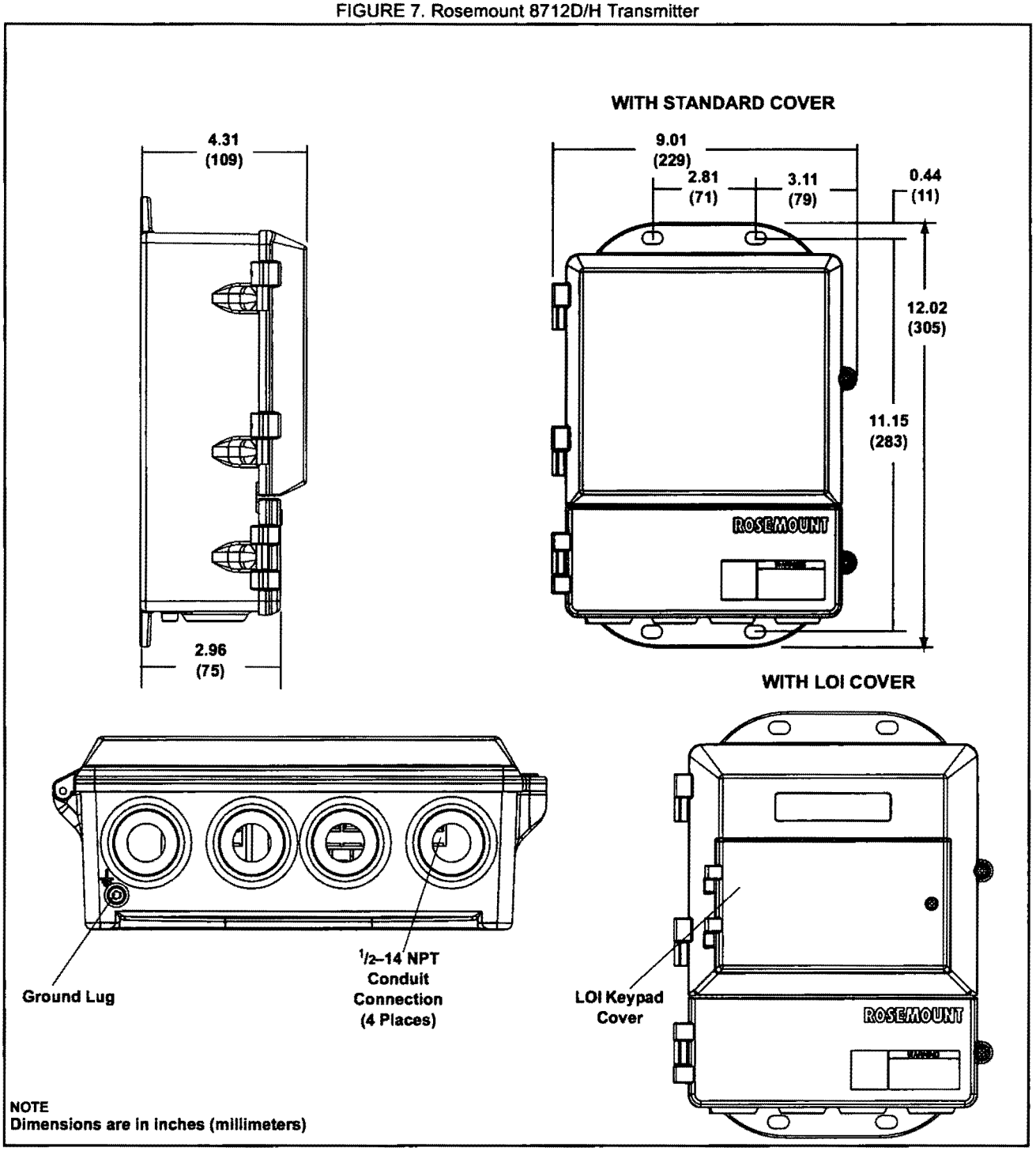

NOTE
Dimensions are in inches (millimeters)

FIGURE 8. Rosemount 8742C Transmitter

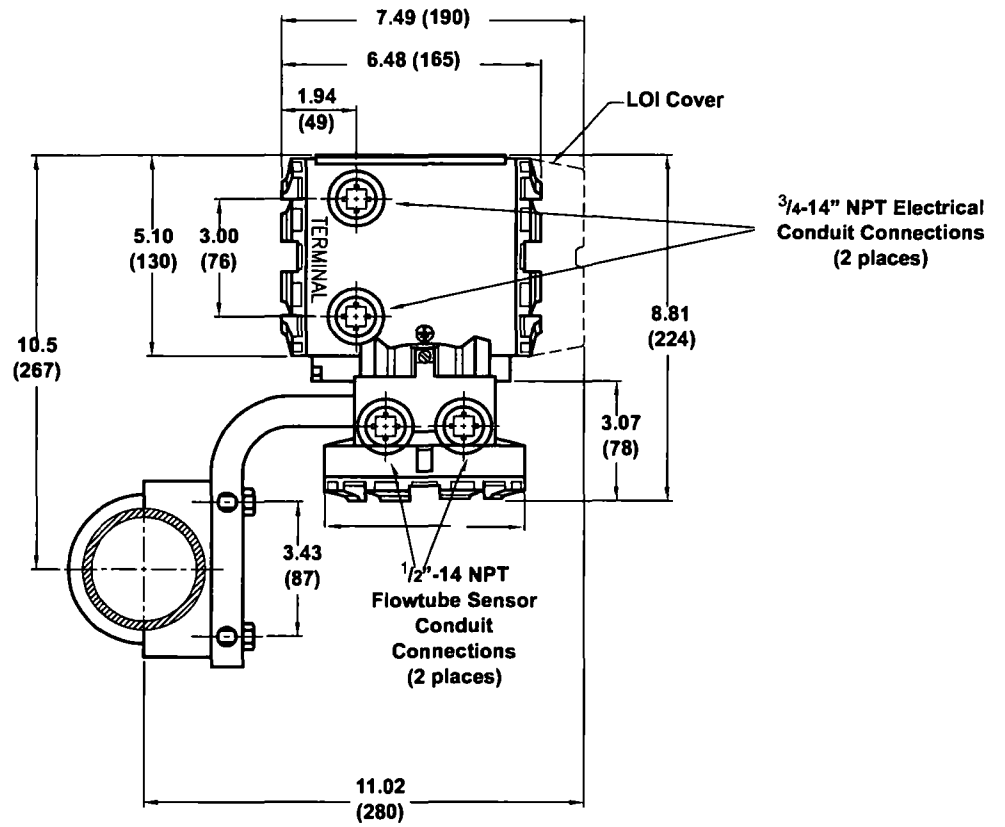

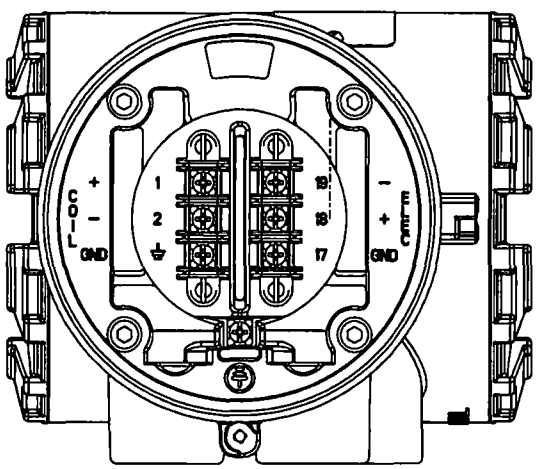

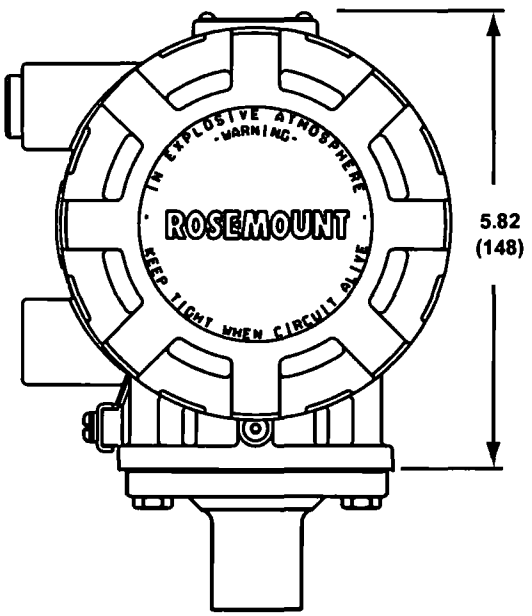

Note
Dimensions in inches (millimeters)

FIGURE 9. Rosemount 8705 and 8707 Flowtube Sensors, Typical of 0.5- through 4-in. (15 through 100 mm) Line Sizes

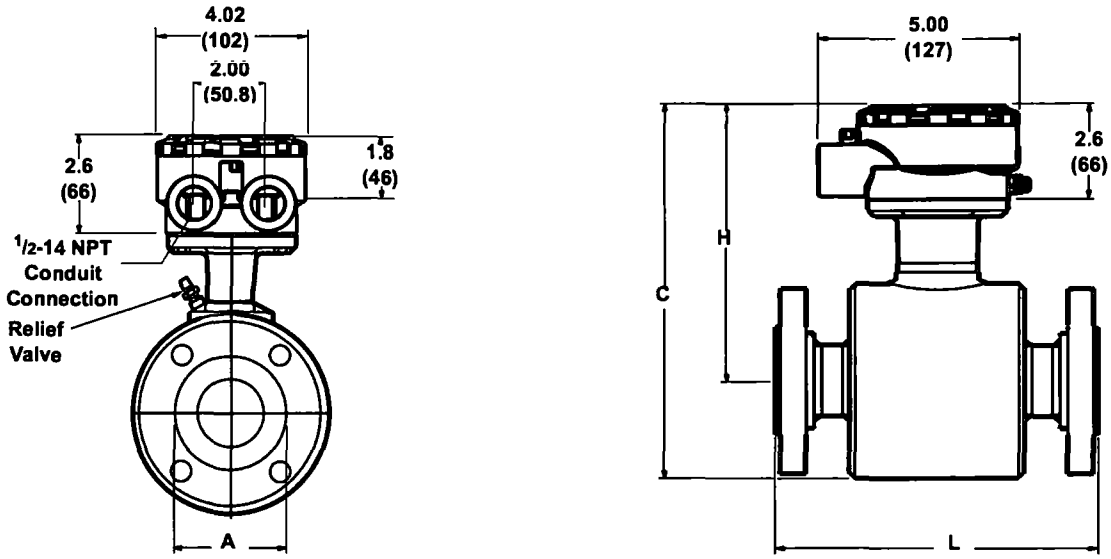

Notes
Dimensions are in inches (millimeters)
See Table 19 and Table 20 for variable dimensions
W1 Housing Configuration (Sealed, welded housing with pressure relief valve)

FIGURE 10. Rosemount 8705 and 8707 Flowtube Sensors, Typical of 6- through 36-in. (150 through 900 mm) Line Sizes

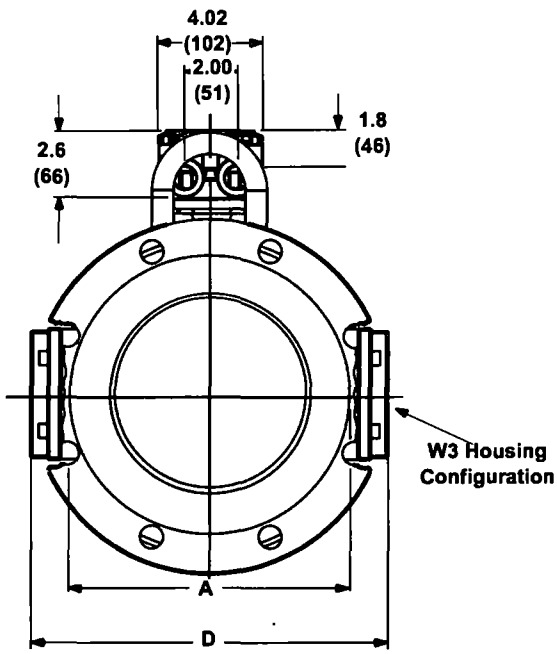

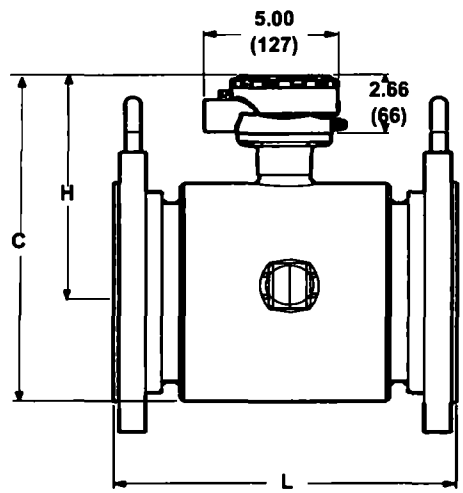

Notes
Dimensions are in inches (millimeters)
See Table 19 and Table 20 for variable dimensions
W3 Housing Configuration (Sealed welded housing with separate electrode compartments)

TABLE 19. Rosemount 8705 and 8707 Dimensions in Inches (Millimeters) (Dimensions with ASME B16.5 (ANSI) Flanges) [1]
Refer to Dimensional Drawings, Figure 9, Figure 10, and Figure 12

Line Size[2] and Flange Rating	Body Height "H"	Liner Face Diameter "A"	Overall Flowtube Sensor Length "L"[3]	Flange Diameter "D"	Liner Thickness	Inside Diameter
0.5–150	6.75 (171)	1.38 (35)	7.88 (200)	3.50 (89)	0.09 (2.3)	0.49 (12.5)
0.5–300	6.75 (171)	1.38 (35)	7.88 (200)	3.75 (95)	0.09 (2.3)	0.49 (12.5)
0.5–600	6.75 (171)	1.38 (35)	8.67 (220)	3.75 (95)	0.09 (2.3)	0.49 (12.5)
1–150	6.75 (171)	2.00 (51)	7.88 (200)	4.25 (108)	0.09 (2.3)	0.91 (23)
1–300	6.75 (171)	2.00 (51)	7.88 (200)	4.88 (124)	0.09 (2.3)	0.91 (23)
1–600	6.75 (171)	1.62 (41)	8.67 (220)	4.88 (124)	0.09 (2.3)	0.91 (23)
1–900	6.75 (171)	1.62 (41)	9.66 (245)	5.88 (149)	0.13 (3.3)	0.80 (20)
1.5–150	7.10 (180)	2.88 (73)	7.88 (200)	5.00 (127)	0.12 (3.1)	1.44 (37)
1.5 –300	7.10 (180)	2.88 (73)	7.88 (200)	6.12 (155)	0.12 (3.1)	1.44 (37)
1.5–600	7.10 (180)	2.88 (73)	8.63 (219)	6.12 (155)	0.13 (3.3)	1.36 (35)
1.5–900	7.10 (180)	2.50 (64)	9.52 (242)	7.00 (178)	0.13 (3.3)	1.25 (32)
2–150	7.10 (180)	3.62 (92)	7.88 (200)	6.00 (152)	0.12 (3.1)	1.91 (49)
2–300	7.10 (180)	3.62 (92)	7.88 (200)	6.50 (165)	0.12 (3.1)	1.91 (49)
2–600	7.10 (180)	3.62 (92)	8.78 (223)	6.50 (165)	0.13 (3.3)	1.82 (46)
2–900	7.10 (180)	3.25 (83)	10.26 (261)	8.50 (216)	0.13 (3.3)	1.69 (43)
3–150	8.10 (206)	5.00 (127)	7.88 (200)	7.50 (191)	0.15 (3.8)	2.96 (75)
3–300	8.10 (206)	5.00 (127)	8.63 (219)	8.25 (210)	0.15 (3.8)	2.96 (75)
3–600	8.10 (206)	5.00 (127)	12.4 (315)	8.25 (210)	0.13 (3.3)	2.76 (70)
3–900	8.10 (206)	4.63 (118)	12.8 (326)	9.50 (241)	0.13 (3.3)	2.37 (60)
4–150	8.45 (215)	6.19 (157)	9.84 (250)	9.00 (229)	0.15 (3.8)	3.96 (101)
4–300	8.45 (215)	6.19 (157)	10.88 (276)	10 00 (254)	0.15 (3.8)	3.96 (101)
4–600	8.45 (215)	6.19 (157)	12.83 (326)	10.75 (273)	0.13 (3.3)	3.72 (95)
4–900	8.45 (215)	5.81 (148)	13.89 (353)	11.50 (292)	0.13 (3.3)	3.37 (86)
6–150	9.45 (240)	8.50 (216)	11.81 (300)	11.00 (279)	0.19 (4.8)	5.98 (152)
6–300	9.45 (240)	8.50 (216)	13.06 (332)	12.50 (318)	0.19 (4.8)	5.69 (144)
6–600	9.45 (240)	8.50 (216)	14.23 (361)	14.00 (356)	0.19 (4.8)	5.69 (144)
6–900	9.45 (240)	8.00 (203)	15.51 (394)	15.00 (381)	0.16 (4.1)	4.86 (123)
8–150	10.42 (265)	10.62 (270)	13.78 (350)	13.50 (343)	0.19 (4.8)	7.94 (202)
8–300	10.42 (265)	10.62 (270)	15.60 (396)	15.00 (381)	0.17 (4.3)	7.64 (194)
8–600	10.42 (265)	10.62 (270)	16.72 (428)	16.50 (419)	0.17 (4.3)	7.64 (194)
8–900	10.42 (265)	10.00 (254)	18.47 (469)	18.50 (470)	0.17 (4.3)	6.65 (169)
10–150	11.78 (299)	12.75 (324)	15.00 (381)	16.00 (406)	0.26 (6.5)	9.87 (251)
10–300	11.78 (299)	12.75 (324)	17.13 (435)	17.50 (444)	0.26 (6.5)	9.48 (241)
10–600	11.78 (299)	12.75 (324)	19.54 (496)	20.00 (508)	0.26 (6.5)	9.21 (234)
12–150	12.86 (327)	15.00 (381)	18.00 (457)	19.00 (483)	0.26 (6.7)	11.87 (301)
12–300	12.86 (327)	15.00 (381)	20.14 (512)	20.50 (52)	0.26 (6.7)	11.48 (292)
14–150	13.92 (354)	16.25 (413)	20.91 (531)	21.00 (533)	0.19 (4.8)	13.16 (334)
14–300	13.92 (354)	16.25 (413)	23.16 (588)	23.00 (584)	0.19 (4.8)	12.79 (325)
16–150	14.93 (379)	18.50 (470)	23.88 (607)	23 50 (597)	0.19 (4.8)	15.12 (384)
16–300	14.93 (379)	18.50 (470)	26.13 (664)	25.50 (648)	0.19 (4.8)	14.75 (375)
18–150	16.19 (411)	21.00 (533)	27.00 (686)	25.00 (635)	0.19 (4.8)	17.09 (434)
18–300	16.19 (411)	21.00 (533)	30.12 (765)	28.00 (711)	0.19 (4.8)	16.35 (415)
20–150	17.20 (437)	23.00 (584)	29.78 (756)	27.50 (698)	0.19 (4.8)	18.96 (482)
20–300	17.20 (437)	23.00 (584)	33.04 (839)	30.50 (774)	0.19 (4.8)	18.21 (463)
24–150	19.48 (495)	27.25 (692)	35.75 (908)	32.00 (813)	0.19 (4.8)	22.94 (583)
24–300	19.48 (495)	27.25 (692)	39.38 (1000)	36.00 (914)	0.19 (4.8)	22.06 (560)
30	22.23 (565)	33.80 (859)	37.00 (940)	38.75 (984)	0.19 (4.8)	28.75 (730)
36	26.10 (663)	40.27 (1023)	40.63 (1032)	46.00 (1168)	0.19 (4.8)	35.00 (889)

(1) AS2129 Table D and E flange dimensions match ANSI 150# dimensions.

(2) 30- and 36-in. AWWA C207 Table 2 Class D rated to 150 psi at 150 °F.

(3) When 2 grounding rings are specified, add 0.25 in. (6.35 mm) for 0.50- through 14-in. (15 through 350 mm) flowtube sensors, add 0.50 in. (12.7 mm) for 16-in. (400 mm) and larger. When lining protectors are specified, add 0.25 in. (6.35 mm) for ½- through 12-in. (15 through 300 mm) flowtube sensors, add 0.50 in. (12.7 mm) for 14- through 36-in. (350 through 900 mm) flowtube sensors.

TABLE 20. Rosemount 8705 Flowtube Sensor Dimensions with EN 1092-1 (DIN) Flanges in Millimeters (Inches)

Line Size[1] and Flange Rating	Body Height "H"	Liner Face Diameter "A"	Overall Flowtube Sensor Length "L"[2]	Flange Diameter "D"	Liner Thickness	Inside Diameter
15 mm PN 10–40	171 (6.75)	45 (1.77)	200 (7.88)	95 (3.74)	2.3 (0.09)	12.5 (.49)
25 mm PN 10–40	171 (6.75)	68 (2.68)	200 (7.88)	115 (4.53)	2.3 (0.09)	23.1 (.91)
40 mm PN 10–40	180 (7.10)	88 (3.46)	200 (7.87)	150 (5.91)	3.1 (0.12)	37 (1.44)
50 mm PN 10–40	180 (7.10)	102 (4.02)	200 (7.87)	165 (6.50)	3.1 (0.12)	49 (1.91)
80 mm PN 10–40	206 (8.10)	138 (5.43)	200 (7.87)	200 (7.87)	3.8 (0.15)	75.2 (2.96)
100 mm PN 10–16	215 (8.45)	162 (6.38)	250 (9.84)	220 (8.66)	3 8 (0.15)	100.6 (3.96)
100 mm PN 25–40	215 (8.45)	162 (6.38)	250 (9.84)	235 (9.25)	3.8 (0.15)	100.6 (3.96)
150 mm PN 10	240 (9.45)	212 (8.35)	300 (11.81)	285 (11.22)	4.7 (0.19)	152 (5.98)
150 mm PN 16	240 (9.45)	215 (8.46)	300 (11.81)	220 (8.66)	4.7 (0.19)	152 (5.98)
150 mm PN 25	240 (9.45)	218 (8.58)	300 (11.81)	300 (11.81)	4.7 (0.19)	152 (5.98)
150 mm PN 40	240 (9.45)	218 (8.58)	332 (13.07)	300 (11.81)	4.7 (0.19)	144 (5.67)
200 mm PN 10	265 (10.42)	268 (10.55)	350 (13.78)	240 (13.39)	4.9 (0.19)	202 (7.94)
200 mm PN 16	265 (10.42)	268 (10.55)	350 (13.78)	340 (13.39)	4.9 (0.19)	202 (7.94)
200 mm PN 25	265 (10.42)	278 (10.94)	350 (13.78)	360 (14.17)	4.9 (0.19)	202 (7.94)
200 mm PN 40	265 (10.42)	285 (11.22)	396 (15.60)	375 (14.76)	4.3 (0.17)	194 (7.64)
250 mm PN 10	299 (11.78)	320 (12.60)	381 (15.00)	395 (15.55)	6.6 (0.26)	251 (9.88)
250 mm PN 16	299 (11.78)	320 (12.60)	381 (15.00)	405 (15.94)	6.6 (0.26)	251 (9.88)
250 mm PN 25	299 (11.78)	335 (13.19)	381 (15.00)	425 (16.73)	6.6 (0.26)	251 (9.88)
250 mm PN 40	299 (11.78)	345 (13.58)	435 (17.13)	450 (17.72)	6.6 (0.26)	240 (9.45)
300 mm PN 10	327 (12.86)	370 (14.57)	457 (18.00)	445 (17.52)	6.6 (0.26)	302 (11.87)
300 mm PN 16	327 (12.86)	378 (14.88)	457 (18.00)	460 (18.11)	6.6 (0.26)	302 (11.87)
300 mm PN 25	327 (12.86)	395 (15.55)	457 (18.00)	485 (19.09)	6.6 (0.26)	302 (11.87)
300 mm PN 40	327 (12.86)	410 (16.14)	512 (20.14)	515 (20.28)	6.6 (0.26)	292 (11.48)
350 mm PN 10	354 (13.92)	430 (16.93)	531 (20.91)	505 (19.88)	4.8 (0.19)	334 (13.16)
350 mm PN 16	354 (13.92)	438 (17.24)	531 (20.91)	520 (20.47)	4.8 (0.19)	334 (13.16)
350 mm PN 25	354 (13.92)	450 (17.72)	531 (20.91)	555 (21.85)	4.8 (0.19)	334 (13.16)
350 mm PN 40	354 (13.92)	465 (18.31)	588 (23.16)	580 (22.83)	4.8 (0.19)	12.79 (325)
400 mm PN 10	379 (14.93)	482 (18.98)	607 (23.88)	565 (22.24)	4.8 (0.19)	384 (15.12)
400 mm PN 16	379 (14.93)	490 (19.29)	607 (23.88)	580 (22.83)	4.8 (0.19)	384 (15.12)
400 mm PN 25	379 (14.93)	505 (19.88)	607 (23.88)	620 (24.41)	4.8 (0.19)	384 (15.12)
400 mm PN 40	379 (14.93)	535 (21.06)	664 (26.13)	660 (25.98)	4.8 (0.19)	375 (14.75)
450 mm PN 10	411 (16.19)	532 (20.94)	682 (26.85)	615 (24.20)	4.8 (0.19)	438 (17.24)
450 mm PN 16	411 (16.19)	550 (21.65)	682 (26.85)	640 (25.20)	4.8 (0.19)	438 (17.24)
450 mm PN 25	411 (16.19)	555 (21.85)	682 (26.85)	670 (26.38)	4.8 (0.19)	438 (17.24)
450 mm PN 40	411 (16.19)	560 (22.05)	761 (29.97)	685 (26.97)	4.8 (0.19)	419 (16.49)
500 mm PN 10	437 (17.20)	585 (23.03)	756 (29.78)	670 (26.38)	4.8 (0.19)	482 (18.96)
500 mm PN 16	437 (17.20)	610 (24.02)	756 (29.78)	715 (28.15)	4.8 (0.19)	482 (18.96)
500 mm PN 25	437 (17.20)	615 (24.21)	756 (29.78)	730 (28.74)	4.8 (0.19)	482 (18.96)
500 mm PN 40	437 (17.20)	615 (24.21)	839 (33.04)	755 (29.72)	4.8 (0.19)	463 (18.21)
600 mm PN 10	495 (19.48)	685 (26.97)	908 (35.75)	780 (30.71)	4.8 (0.19)	583 (22.94)
600 mm PN 16	495 (19.48)	725 (28.54)	908 (35.75)	840 (33.07))	4.8 (0.19)	583 (22.94)
600 mm PN 25	495 (19.48)	720 (28.35)	908 (35.75)	845 (33.27)	4.8 (0.19)	581 (22.87)
Dimensions with EN 1092-1 (DIN) Flanges						

(1) Consult factory for larger line sizes.

(2) When 2 grounding rings are specified, add 6.35 mm (0.25 in.) for 15 mm through 350 mm (½- through 14 in.) flowtube sensors or 12.7 mm (0.50 in.) for 400 mm (16 in.) and larger. When lining protectors are specified, add 6.35 mm (0.25 in.) for 15 mm through 300 mm (½- through 12-in.) flowtube sensors, 12.7 mm (0.50 in.) for 350 mm through 900 mm (14- through 36-in.) flowtube sensors.

FIGURE 11. Rosemount 8711 Dimensional Drawings (0.15-in. through 1-in. line sizes)

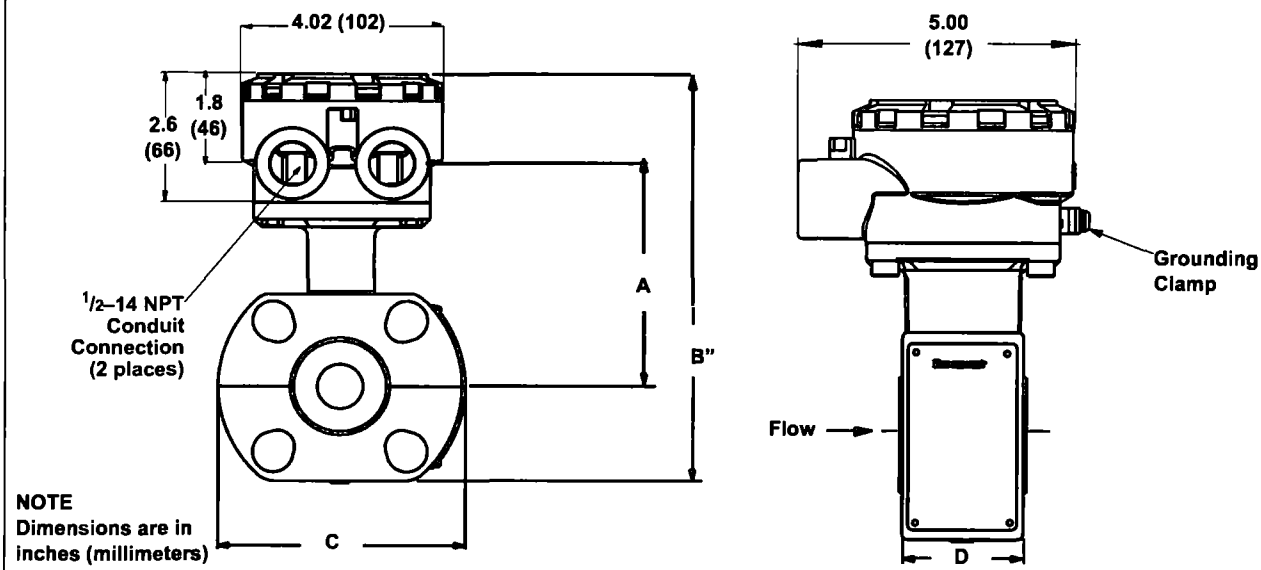

NOTE
Dimensions are in inches (millimeters)
See Table 21 for variable dimensions

FIGURE 12. Rosemount 8711 Dimensional Drawings (1.5-in. through 8-in. line sizes)

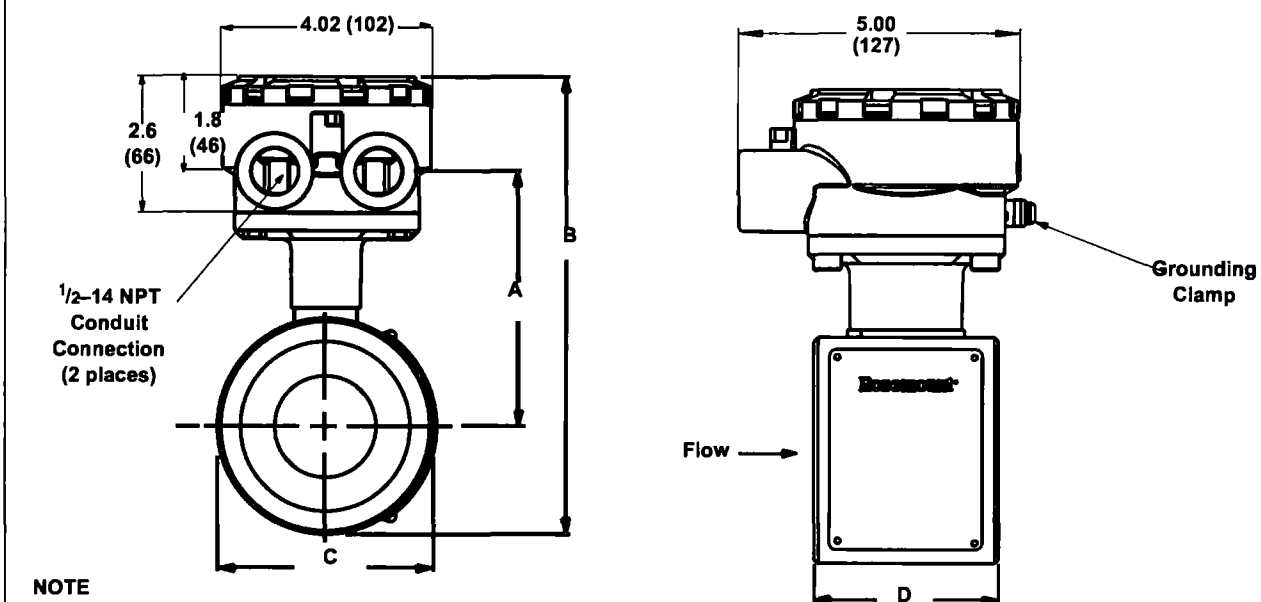

NOTE
Dimensions are in inches (millimeters)
See Table 21 for variable dimensions

TABLE 21. Rosemount 8711 Flowtube Sensor Dimensions and Weight

Nominal Line Size Inches (mm)		Flowtube Sensor Housing Dimensions "A" Max.		"B"		"C"		Flowtube Sensor Length "D"		Inside Diameter		Weight lb (kg)	
0.15[1]	(4)	4.00	(102)	5.44	(138)	3.56	(90)	2.17	(55)	.150	(4)	4	(2)
0.30[1]	(8)	4.00	(102)	5.44	(138)	3.56	(90)	2.17	(55)	.300	(7)	4	(2)
0.5	(15)	4.00	(102)	5.44	(138)	3.56	(90)	2.17	(55)	.593	(15)	4	(2)
1	(25)	4.31	(109)	6.06	(154)	4.50	(114)	2.17	(55)	.970	(24)	5	(2)
1.5	(40)	4.42	(112)	7.41	(188)	3.28	(83)	2 73	(69)	1.50	(38)	5	(2)
2	(50)	4.64	(118)	7.94	(202)	3.91	(99)	3.26	(83)	1.92	(50)	7	(3)
3	(80)	5.26	(134)	9.19	(233)	5.16	(131)	4.68	(119)	2.79	(76)	13	(6)
4	(100)	5.87	(149)	10.41	(264)	6.38	(162)	5.88	(149)	3.70	(99)	22	(10)
6	(150)	6.97	(177)	12.60	(320)	8 56	(217)	6.87	(174)	5.825	(148)	35	(16)
8	(200)	8.00	(2003)	14.66	(372)	10.63	(270)	8.86	(225)	7.875	(200)	60	(27)

(1) 0.15 and 0.30 in. (4 and 8 mm) flowtube sensors mount between ½-in. (13 mm) flanges.

FIGURE 13. Dimensional Drawings of Rosemount 8721 Flowtube Sensors Typical of 1 through 4inch (25 through 100mm) line sizes.

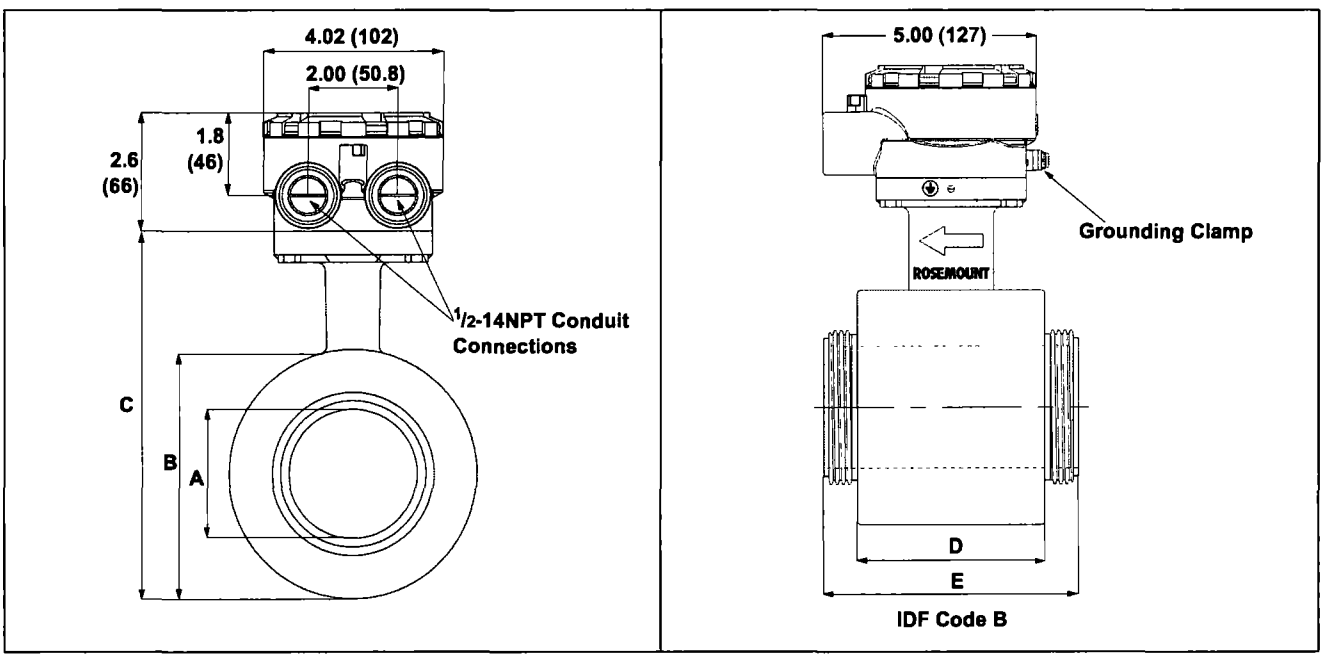

TABLE 22. Rosemount 8721 Dimensions in Inches (Millimeters). Refer to Dimensional Drawing Figure 13.

Line Size	Flowtube Sensor Dimensions A	Body Diameter B	Flowtube Sensor Height C	Body Length D	IDF Length E
½ (15)	0.62 (15.8)	2.87 (73.0)	5.51 (140.0)	2.13 (54.0)	3.66 (93.0)
1 (25)	0.87 (22.2)	2.87 (73.0)	5.51 (140.0)	2.13 (54.0)	3.66 (93.0)
1½ (40)	1.37 (34.9)	3.50 (88.9)	6.14 (155.9)	2.40 (61.0)	3.96 (100.5)
2 (50)	1.87 (47.6)	4.00 (101.5)	6.63 (168.5)	2.83 (72.0)	4.41 (112.0)
2½ (65)	2.38 (60.3)	4.53 (115.0)	7.17 (182.0)	3.58 (91.0)	5.23 (133.0)
3 (80)	2.87 (73.0)	5.57 (141.5)	8.21 (208.5)	4.41 (112.0)	5.98 (152.0)
4 (100)	3.84 (97.6)	6.98 (177.0)	9.61 (244.0)	5.20 (132.0)	6.77 (172.0)

FIGURE 14. Dimensional Drawings of Rosemount 8721 Flowtube Sensors Typical of 1 through 4inch (25 through 100mm) line sizes

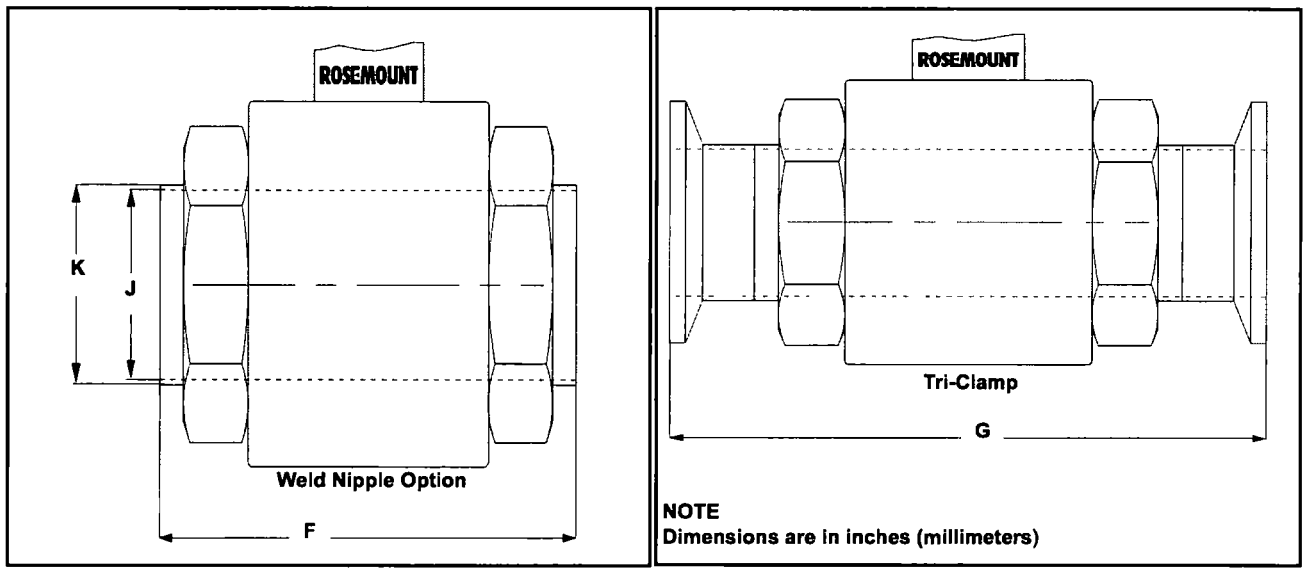

TABLE 23. Rosemount 8721 Process Connection Lay Length in Inches (Millimeters). Refer to Figure 14.

Line Size	Weld Nipple Length F	Weld Nipple Tube ID J	Weld Nipple Tube OD K	Tri Clamp Length G	HP Option Length G	DIN 11851 (Met and Imp) Length G	DIN 11851 (Met and Imp) ID J	DIN 11851 (Metric) ID J
1/2 (15)	5.61 (142)	0.62 (15.75)	0.75 (19.05)	8.31 (211)	NA	8.33 (211)	0.62 (15.75)	0.79 (19.99)
1 (25)	5.61 (142)	0.87 (22.2)	1.00 (25.65)	7.85 (199)	9.85 (250)	7.89 (200)	0.85 (21.52)	1.02 (26.01)
1 1/2 (40)	5.92 (150)	1.37 (34.9)	1.68 (42.7)	8.17 (207)	9.91 (252)	8.53 (217)	1.37 (34.85)	1.50 (38.00)
2 (50)	6.35 (161)	1.87 (47.6)	2.01 (51.05)	8.60 (218)	9.91 (252)	9.10 (231)	1.87 (47.60)	1.97 (50.01)
2 1/2 (65)	7.18 (182)	2.37 (60.3)	2.51 (63.75)	9.43 (239)	9.91 (252)	10.33 (262)	2.37 (60.30)	2.60 (65.99)
3 (80)	7.93 (201)	2.87 (73.0)	3.01 (76.45)	10.18 (258)	9.91 (252)	11.48 (291)	2.87 (72.97)	3.19 (81.03)
4 (100)	9.46 (240)	3.84 (97.6)	4.01 (101.85)	11.70 (297)	NA	13.72 (349)	3.84 (97.61)	3.94 (100.00)

Line Size	DIN 11864-1 Length G	DIN 11864-2 Length G	SMS 1145 Length G	Cherry-Burrell I-Line Length G
1/2 (15)	NA	NA	NA	NA
1 (25)	8.98 (228.0)	8.86 (225.0)	6.87 (174)	7.17 (182)
1 1/2 (40)	9.72 (247.0)	9.57 (243.0)	7.50 (190)	7.80 (198)
2 (50)	10.16 (258.0)	10.00 (254.0)	7.93 (201)	8.42 (214)
2 1/2 (65)	11.89 (302.0)	11.54 (293.0)	9.07 (230)	9.49 (241)
3 (80)	12.95 (329.0)	12.44 (316.0)	9.82 (249)	10.37 (263)
4 (100)	14.57 (370.0)	14.21 (361.0)	11.67 (296)	12.15 (309)

FIGURE 15.

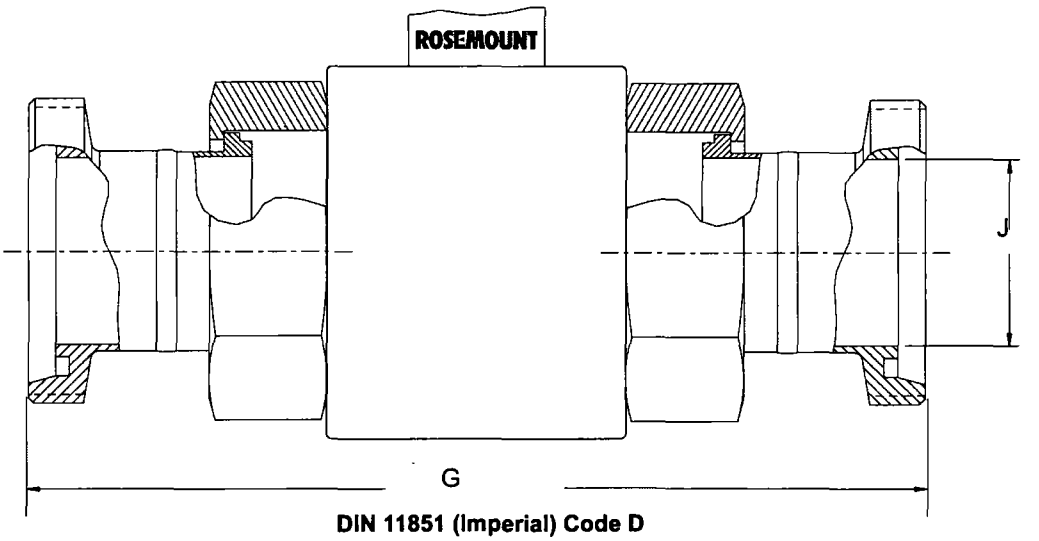

DIN 11851 (Imperial) Code D

FIGURE 16.

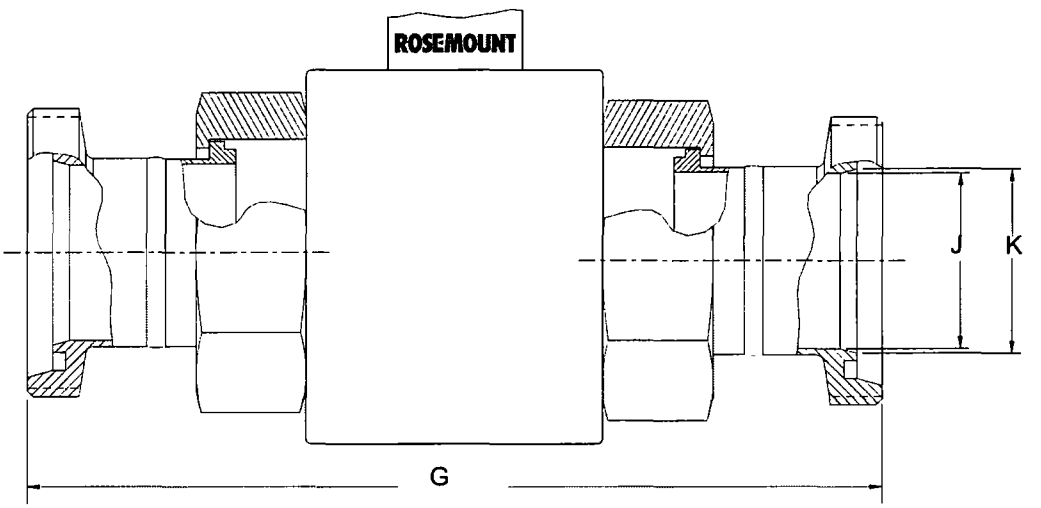

DIN 11851 (Metric) Code E

FIGURE 17.

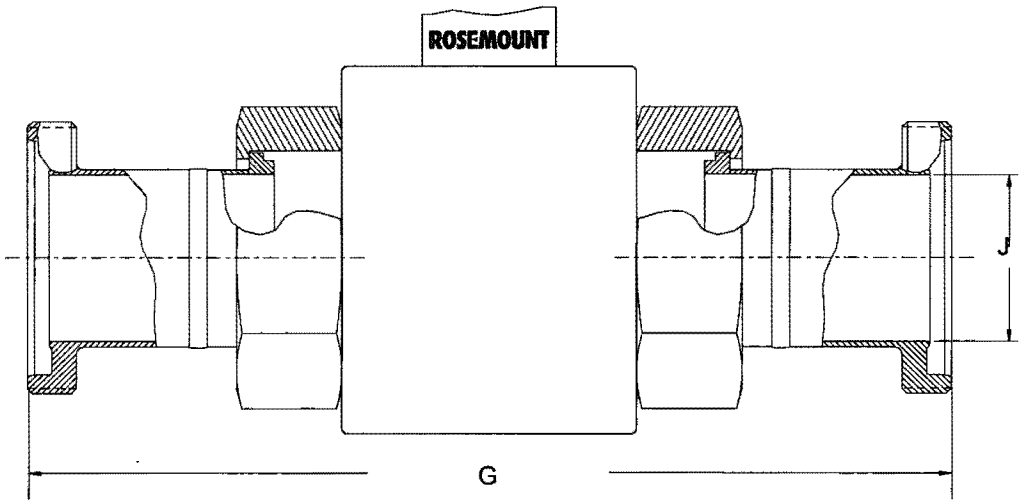

11864-1

FIGURE 18.

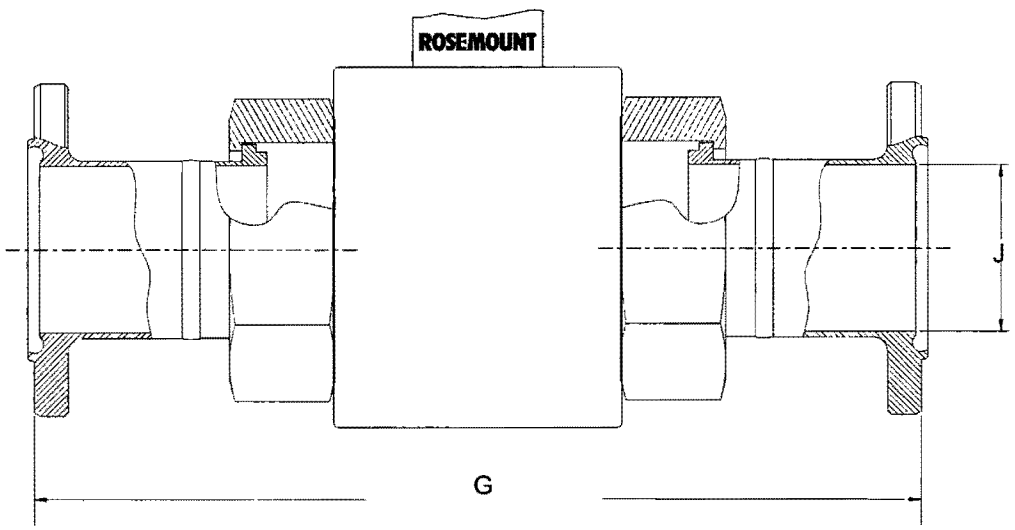

11864-2

FIGURE 19.

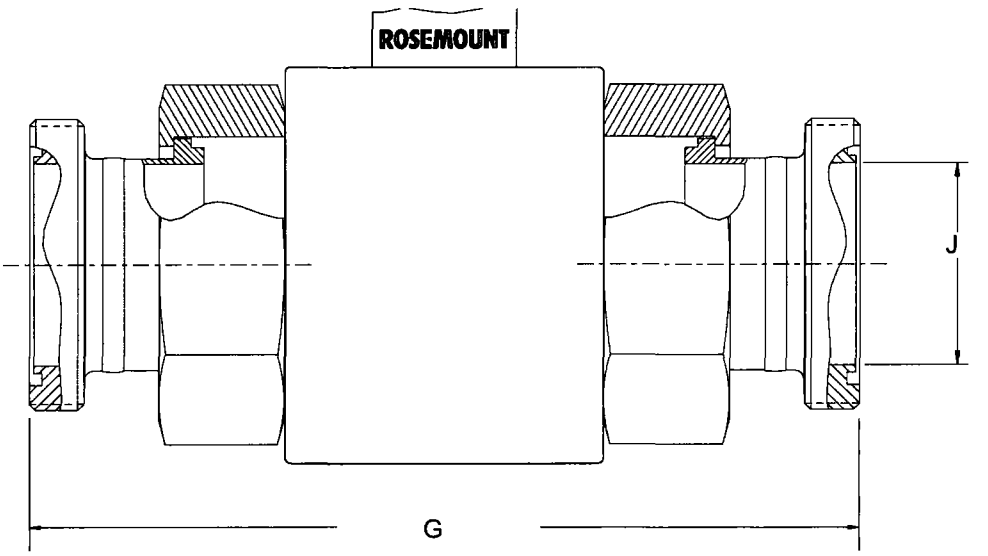

SMS1145 Code H

FIGURE 20.

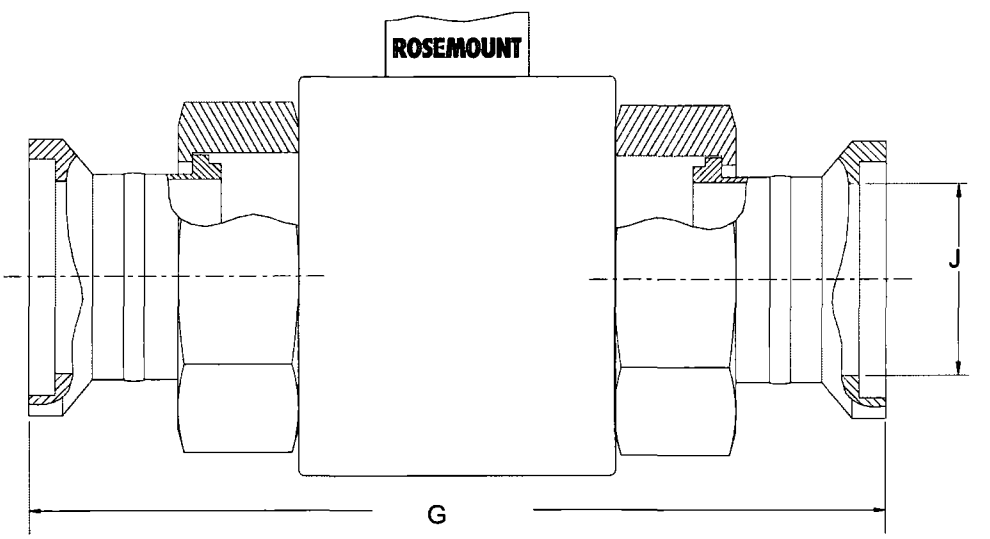

Cherry Burrell I-Line Code J

FIGURE 21. Rosemount 8714D Calibration Standard

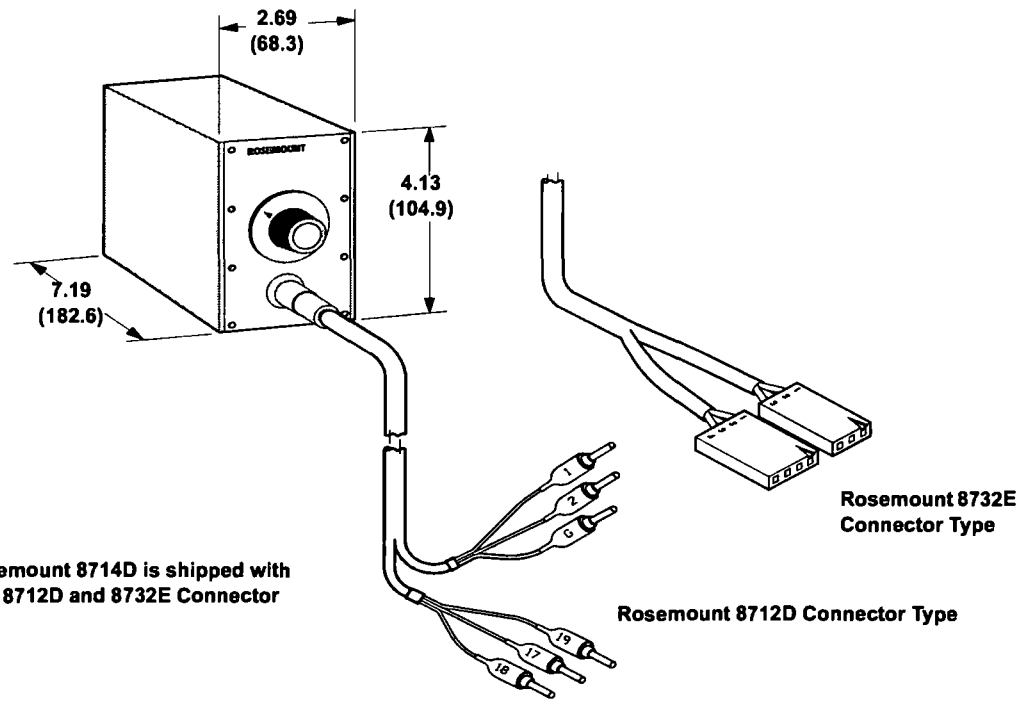

NOTE
The Rosemount 8732E Connector Type is compatible with the Rosemount 8742.

Magnetic Flowmeter Sizing

Flowmeter Sizing

Because of its effect on flow velocity, flowtube sensor size is an important consideration. It may be necessary to select a magnetic flowmeter that is larger or smaller than the adjacent piping to ensure the fluid velocity is in the specified measuring range of the flowtube sensor. Suggested guidelines and examples for sizing normal velocities in different applications are listed in Table 24, Table 25, and Table 26. Operation outside these guidelines may also give acceptable performance.

TABLE 24. Sizing Guidelines

Application	Velocity Range (ft/s)	Velocity Range (m/s)
Normal Service	2–20	0.6–6.1
Abrasive Slurries	3–10	0.9–3.1
Non-Abrasive Slurries	5–15	1.5–4.6

To convert flow rate to velocity, use the appropriate factor listed in Table 25 and the following equation:

$$\text{Velocity} = \frac{\text{Flow Rate}}{\text{Factor}}$$

Example: SI Units

Magmeter Size: 100 mm **(factor from Table 25 = 492.0)**
Normal Flow Rate: 800 L/min

$$\text{Velocity} = \frac{800 \text{ (L/min)}}{492.0}$$

Velocity = 1.7 m/s

Example: English Units

Magmeter Size: 4 in. **(factor from Table 25 = 39.679)**
Normal Flow Rate: 300 GPM

$$\text{Velocity} = \frac{300 \text{ (gpm)}}{39.679}$$

Velocity = 7.56 ft/s

TABLE 25. Line Size vs. Conversion Factor

Nominal Line Size Inches (mm)	Gallons Per Minute Factor	Liters Per Minute Factor
0.15 (4)	0.055	0.683
0.30 (8)	0.220	2.732
½ (15)	0.947	11.745
1 (25)	2.693	33.407
1½ (40)	6.345	78.69
2 (50)	10.459	129.7
3 (80)	23.042	285.7
4 (100)	39.679	492.0
6 (150)	90.048	1,116
8 (200)	155.94	1,933
10 (250)	245.78	3,048
12 (300)	352.51	4,371
14 (350)	421.70	5,229
16 (400)	550.80	6,830
18 (450)	697.19	8,645
20 (500)	866.51	10,745
24 (600)	1,253.2	15,541
30 (750)	2,006.0	24,877
36 (900)	2,935.0	36,398

TABLE 26. Line Size vs. Velocity/Rate

Nominal Line Size in Inches (mm)	Minimum/Maximum Flow Rate							
	Gallons per Minute				Liters per Minute			
	at 0.04 ft/s (Low-flow Cutoff)	at 1 ft/s (Min Range Setting)	at 3 ft/s	at 39 ft/s (Max Range Setting)	at 0.012 m/s (Low-flow Cutoff)	at 0.3 m/s (Min Range Setting)	at 1 m/s	at 12 m/s (Max Range Setting)
.15 (4)	0.002	0.055	0.16	2.14	0.01	0.21	0.68	8.16
.30 (8)	0.009	0.220	0.66	8.58	0.03	0.83	2.73	32.76
1/2 (15)	0.038	0.947	2.84	36.93	0.14	3.58	11.74	140.88
1 (25)	0.108	2.694	8.08	105.07	0.41	10.18	33.40	424.80
1 1/2 (40)	0.254	6.345	19.03	247.46	0.96	23.98	78.69	944.28
2 (50)	0.418	10.459	31.37	407.90	1.58	39.54	129.7	1,556
3 (80)	0.922	23.042	69.12	898.64	3.49	87.10	285.7	3,428
4 (100)	1.588	36.679	119.0	1430.4	6.00	138.6	492.0	5,904
6 (150)	3.600	90.048	270.1	3511.8	13.61	340.3	1,116	13,400
8 (200)	6.240	155.94	467.7	6081.7	23.59	589.4	1,933	23,204
10 (250)	9.840	245.78	737.3	9585.4	37.20	929.0	3,048	36,576
12 (300)	14.200	352.51	1,059	13,747	53.68	1,332	4,371	52,548
14 (350)	16.800	421.70	1,265	16,446	63.50	1,594	5,230	62,755
16 (400)	22.000	550.80	1,652	21,481	83.16	2,082	6,830	81,964
18 (450)	27.800	697.19	2,091	27,190	105.0	2,635	8,646	103,750
20 (500)	34.600	866.51	2,599	33,793	130.7	3,275	10,740	128,948
24 (600)	50.200	1,253.2	3,759	48,874	189.7	4,737	15,540	186,496
30 (750)	80.200	2,006.0	6,018	78,234	303.1	7,582	24,880	298,527
36 (900)	117.40	2,935 0	8,805	114,465	443.7	11,094	36,390	436,779

Upstream/Downstream Piping Length

To ensure specification accuracy over widely varying process conditions, install the flowtube sensor with a minimum of five straight pipe diameters upstream and two straight pipe diameters downstream from the electrode plane. See Figure 22. This procedure should adequately allow for disturbances created by elbows, valves, and reducers.

FIGURE 22. Upstream and Downstream Straight Pipe Diameters

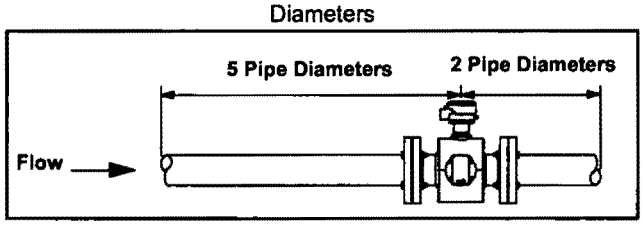

Installations with reduced straight runs from 0 to five pipe diameters are possible. In reduced straight pipe run installations, performance will shift to as much as 0.5% of rate. Reported flow rates will still be highly repeatable.

Flowtube Sensor Grounding

A reliable ground path is required between the flowtube sensor and the process fluid. Optional grounding rings, grounding electrodes, and lining protectors are available with 8700 Series flowtube sensors to ensure proper grounding. See Table 31 and Table 32.

Product Selection Guide

Several flowtube sensor types, liner types, electrode materials, electrode types, grounding options, and transmitters are available for the Rosemount 8700 Series Magnetic Flowmeter System to ensure compatibility with virtually any application and installation. See Table 29 for information on liner types, Table 30 for information on electrodes materials and electrode types, Table 31 and Table 32 for grounding options and installation, and Table 27 for transmitter selection. Other material options not mentioned here are available. Contact your local sales representative for alternative material selection. For further guidance on selecting materials, refer to the Magnetic Flowmeter Material Selection Guide located on Rosemount.com (Technical Data Sheet Number 00816-0100-3033). For more information regarding product offering and ordering information, refer to "Ordering Information" on page 65 in this product data sheet.

TABLE 27. Transmitter Selection

Transmitter	General Characteristics
8732E	• Ideal for integral mount transmitter installations • Advanced Diagnostics (DA1 and DA2 Suites) available • Optical Switch LOI • Optional DI/DO available
8712D 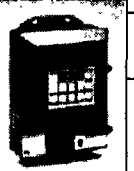	• Remote mount transmitter • Easy to use LOI with dedicated configuration buttons • Advanced Diagnostics (DA1 Suite) available
8712H 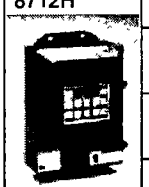	• Remote mount transmitter • High-Signal Pulsed DC for use with the High-Signal 8707 Flowtube Sensor • Ideal for noisy applications - mining/pulp stock/other slurries • 115 V AC power only • Not CE Marked
8742C 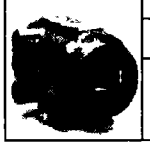	• FOUNDATION fieldbus transmitter • Integral or remote mount • Advanced Diagnostics (D01 Suite) available

TABLE 28. Flowtube Sensor Selection

Flowtube Sensor	General Characteristics
8705	• Standard Process Flowtube Sensor • Flanged Process Connections • Welded, sealed coil housing • 1/2-in. (15mm) to 36-in. (900mm) • Pulse DC Technology • Standard, grounding, and bulletnose electrodes available
8707 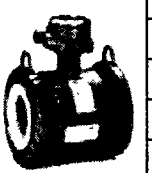	• High Signal Flowtube Sensor • Flanged Process System Flowtube Sensor • Welded, sealed coil housing • 3-in. (80mm) to 36-in. (900mm) • High current pulsed DC technology ideal for high noise applications • Standard, grounding, and bulletnose electrodes available
8711	• Wafer (flangeless) design • Economical, compact, and lightweight alternative to flanged flowtube sensors • 0.15-in. (4mm) to 8-in. (200mm) • Pulsed DC technology • Standard, grounding, and bulletnose electrodes available
8721 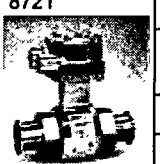	• Hygienic flowtube sensor • Designed for food, beverage, and pharmaceutical applications • 3-A and EHEDG certified • 1/2-in. (15mm) to 4-in. (100mm) • Pulsed DC technology • Variety of industry standard process connections • Suitable for CIP/SIP

TABLE 29. Lining Material Selection

Liner Material	General Characteristics
PFA 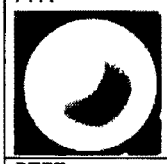	• Best chemical resistance • Better abrasion resistance than PTFE • Best high temperature capabilities • -20 to 350°F (-29 to 177°C)
PTFE 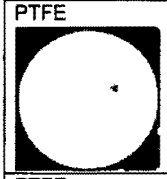	• Highly chemical resistant • Excellent high temperature capabilities • -20 to 350°F (-29 to 177°C)
ETFE	• Excellent chemical resistance • Better abrasion resistance than PTFE • -20 to 300°F (-29 to 149°C)
Polyurethane	• Excellent abrasion resistance for slurries with small and medium particles • Limited chemical resistance • 0 to 140°F (-18 to 60°C) • Typically applied in clean water
Neoprene 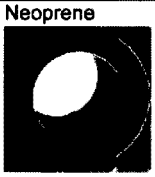	• Very good abrasion resistance for small and medium particles • Better chemical resistance than polyurethane • 0 to 185°F (-18 to 85°C) • Typically applied in water with chemicals, and sea water
Linatex Rubber 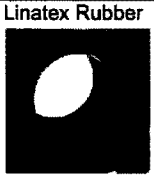	• Very good abrasion resistance for large particles • Limited chemical resistance especially in acids • Softer material than polyurethane and neoprene • 0 to 158°F (-18 to 70°C) • Typically applied in mining slurries

TABLE 30. Electrode Selection

Electrode Material	General Characteristics
316L Stainless Steel	• Good corrosion resistance • Good abrasion resistance • Not recommended for sulfuric or hydrochloric acids
Nickel Alloy 276 (UNS N10276)	• Better corrosion resistance • High strength • Good in slurry applications • Effective in oxidizing fluids
Tantalum	• Excellent corrosion resistance • Not recommended for hydrofluoric acid, fluorosilic acid, or sodium hydroxide
80% Platinum	• Best chemical resistance • Expensive material • not recommended for aquaregia
Titanium	• Better chemical resistance • Better abrasion resistance • Good for sea water applications • Not recommended for hydrofluoric or sulfuric acid
Electrode Type	**General Characteristics**
Standard Measurement	• Lowest cost • Good for most applications
Standard Measurement + Grounding (Also see Table 31 and Table 32 for grounding options and installation	• Low cost grounding option especially for large line sizes • Minimum conductivity of 100 microsiemens/cm • Not recommended for electrolysis or galvanic corrosion applications
Bulletnose	• Slightly more expensive • Best option for coating processes

TABLE 31. Grounding Options

Grounding Options	General Characteristics
No Grounding Options (grounding straps)	• Acceptable for conductive unlined pipe
	• Grounding straps provided at no cost
Grounding Electrodes	• Same material as measurement electrodes
	• Sufficient grounding option when process fluid conductivity is greater than 100 microsiemens/cm
	• Not recommended in electrolysis applications, galvanic corrosion applications, or applications where the electrodes may coat.
Grounding Rings	• Low conductivity process fluids
	• Cathodic or electrolysis applications that may have stray currents in or around the process
	• Variety of materials for process fluid compatibility
Lining Protectors	• Protect upstream edge of flowtube sensor from abrasive fluids
	• Permanently installed on flowtube sensor
	• Protect liner material from over torquing of flange bolts
	• Provide ground path and eliminate need for grounding rings or grounding electrode

TABLE 32. Grounding Installation

Type of Pipe	Grounding Options No Grounding Option (Straps Only)	Grounding Rings	Grounding Electrode	Lining Protectors
Conductive Unlined Pipe	Acceptable	Not Required	Not Required	Acceptable (Not Required)
Conductive Lined Pipe	Not Acceptable	Acceptable	Acceptable	Acceptable
Non-Conductive Pipe	Not Acceptable	Acceptable	Acceptable	Acceptable

Ordering Information

ROSEMOUNT 8732E ORDERING INFORMATION

Model	Product Description
8732E	Magnetic Flowmeter Transmitter
Code	**Transmitter Style**
S	Standard
Code	**Transmitter Mount**
T	Integral Mount
R	Remote Mount for 2 in. pipe or panel (includes CS mounting bolts and 316L SST bracket)
Code	**Transmitter Power Supply**
1	AC Power Supply (90 to 250 V AC, 50-60Hz)
2	DC Power Supply (12 to 42 V DC)
Code	**Outputs**
A	4-20 mA Digital Electronics (HART Protocol)
B	4-20 mA Digital Electronics (HART Protocol) with Intrinsically Safe Output[1]
Code	**Conduit Entry**
	2 Conduits
1	1/2 - 14 NPT, 2 Conduit Entries
2	CM20, 2 Conduit Entries[2]
3	PG 13.5, 2 Conduit Entries[2]
	3 Conduits
4	1/2 - 14 NPT, 3 Conduit Entries
5	CM20, 3 Conduit Entries[2]
6	PG 13.5, 3 Conduit Entries[2]
Code	**Safety Approvals[3]**
NA	CE Marking, no hazardous location approval
	FM & CSA
N0	FM Class 1 Div 2 for non-flammable: CSA Class 1 Div 2
N5	FM Class 1 Div 2 for flammable fluids
E5	FM Class 1 Div 1, explosion-proof
	ATEX
E1	ATEX flameproof Ex de IIC, and ATEX Dust Approval
ED	ATEX flameproof Ex de IIB T6, and ATEX Dust Approval
N1	ATEX Type n Ex nA nL IIC and ATEX Dust Approval[4]
ND	ATEX Dust Approval
	IECEx
E7	IECEx flameproof Ex de IIC, and IECEx Dust Approval
EF	IECEx flameproof Ex de IIB T6, and IECEx Dust Approval
N7	IECEx Type n Ex nA nL IIC and IECEx Dust Approval[4]
NF	IECEx Dust Approval

Continued On Next Page

Code	Options
	PlantWeb Product/Process Diagnostics
DA1	Magmeter HART Diagnostic Suite 1: Includes High Process Noise and Ground/Wiring Fault Detection
DA2	Magmeter HART Diagnostic Suite 2: Includes 8714i Calibration Verification
	Discrete Input/Discrete Output
AX	DI/DO, see page 11 for more details(5) (6)
	Other Options
C1	Custom Configuration (CDS Required)
D1	High Accuracy Calibration (0.15% of rate for matched tube and transmitter)(7)
DT	Heavy Duty Tagging
M4	Local Operator Interface
B6	316L Stainless Steel 4-bolt Kit for 2-in. Remote Pipe Mount
GE	M12, 4-Pin, Male Connector (Eurofast)
GM	A Size Mini, 4-Pin, Male Connector (Minifast)
GT	A Size, Spade Terminal Mini, 5-pin, Male Connector (Minifast)
C4	Analog Output Levels Compliant with NAMUR Recommendations NE43, 18-January-1994, and High Alarm Level
CN	Analog Output Levels Compliant with NAMUR Recommendations NE43, 18-January-1994, and Low Alarm Level
	QIG Language
YA	Danish
YD	Dutch
YF	French
YG	German
YH	Finnish
YI	Italian
YN	Norwegian
YP	Portuguese
YS	Spanish
YR	Russian
YW	Swedish
Typical Model Number: 8732E S T 1 A 1 N0 DA1 DA2 M4	

(1) I.S. Output must be externally powered

(2) Adapter are used for this conduit entry type

(3) All product, ordered with or without Safety approvals, is compliant with local CE Marking and C-tick requirements unless specifically noted as a special

(4) For DC Transmitter Power Supply (Code = 2) Only

(5) Not available with intrinsically safe outputs (output option B)

(6) Not available with conduit entry codes 1, 2 or 3

(7) D1 Option Code must be ordered with flowtube sensor and transmitter

ROSEMOUNT 8712D ORDERING INFORMATION

Model	Product Description
8712D	Magnetic Flowmeter Transmitter
Code	**Transmitter Style**
R	Remote (2-in. pipe or surface mounting)
Code	**Power Supply Voltage**
03	12–42 V DC
12	90-250 V AC, 50–60 Hz
Code	**Product Certifications**
NA	No Hazardous Area Approval; CE Marking
	FM & CSA
N0	Factory Mutual (FM) Class I, Division 2 Approval for nonflammable fluids, Canadian Standards Association (CSA) Class I, Division 2 Approval; CE Marking
N5	Factory Mutual (FM) Class I, Division 2 Approval for flammable fluids
	ATEX
N1	ATEX Type n Ex nA nL IIC and ATEX Dust Approval[1]
Code	**Options**
DA1	Magmeter HART Diagnostic Suite 1: Includes High Process Noise, Ground/Wiring Fault Detection, and Transmitter Verification
B6	Stainless Steel 4-bolt Kit for 2-in. Pipe Mount
C1	Custom Configuration (Completed CDS required with order)
C4	Analog Output Levels Compliant with NAMUR recommendations NE43, 18-January-1994, and high alarm level[2]
CN	Analog Output Levels Compliant with NAMUR recommendations NE43, 18-January-1994,and low alarm level[2]
D1	High Accuracy Calibration (0.15% of rate for matched tube and transmitter)[3]
M4	Local Operator Interface (LOI)
J1	CM 20 conduit adapter
J2	PG 13.5 conduit adapter
Code	**Quick Installation Guide (QIG) Language Options (Default is English)**
YA	Danish QIG
YD	Dutch QIG
YF	French QIG
YG	German QIG
YH	Finnish QIG
YI	Italian QIG
YN	Norwegian QIG
YP	Portuguese QIG
YR	Russian QIG
YS	Spanish QIG
YW	Swedish QIG
Typical Model Number: 8712D R 12 N 0 M 4	

(1) For DC Transmitter Power Supply (Code = 03) Only

(2) NAMUR compliant operation and the Alarm latch options are preset at the factory and can not be changed to standard operation in the field

(3) D1 Option Code must be ordered with flowtube sensor and transmitter

ROSEMOUNT 8712H ORDERING INFORMATION

Model	Product Description
8712H	High-Signal Magnetic Flowmeter Transmitter (For use with 8707 High-Signal Flowtube Sensor only.)
Code	**Transmitter Style**
R	Remote (2-in. pipe or surface mounting)
Code	**Power Supply Voltage**
12	115 V AC, 50–60 Hz
Code	**Product Certifications**
N0	Factory Mutual (FM) Class I, Division 2 Approval for nonflammable fluids; Canadian Standards Association (CSA) Class I, Division 2 Approval
N5	Factory Mutual (FM) Class I, Division 2 Approval for flammable fluids
Code	**Options**
B6	Stainless Steel 4-bolt Kit for 2-in. Pipe Mount
C1	Custom Configuration (Completed CDS required with order)
D1	High Accuracy Calibration [0.25% of rate from 3 to 30 ft/s (0.9 to 10 m/s)] matched flowtube sensor and transmitter system(1)
M4	Local Operator Interface (LOI)
Code	**Quick Installation Guide (QIG) Language Options (Default is English)**
YA	Danish QIG
YD	Dutch QIG
YF	French QIG
YG	German QIG
YH	Finnish QIG
YI	Italian QIG
YN	Norwegian QIG
YP	Portuguese QIG
YS	Spanish QIG
YW	Swedish QIG
Typical Model Number: 8712H R 12 N 0 M 4	

(1) D1 Option Code must be selected for both flowtube sensor and transmitter.

ROSEMOUNT 8742C ORDERING INFORMATION

Model	Product Description
8742C	Magnetic Flowmeter Transmitter with FOUNDATION fieldbus (flowtube sensor ordered separately)
Code	**Transmitter Output**
F	FOUNDATION fieldbus protocol, comes with standard Analog Input Integrator Function block and Backup LAS
Code	**Power Supply Voltage**
AC	90–250 V AC, 50–60 Hz
DC	15-50 V DC
Code	**Product Certifications**
N0	Factory Mutual (FM) Class I, Division 2, Class II/III Division 1, approval for nonflammable fluids; Canadian Standards Association (CSA) Class I, Division 2 Approval CE Marking;
NA	No Hazardous Area Approval; CE Marking
N5	Factory Mutual (FM) Class I, Division 2, Class II/III Division 1, approval for flammable fluids
E1	ATEX EEx d IIB + H2 T6, Flameproof Approval for Hydrogen gas
E5[1]	Factory Mutual (FM) Class I, Division 1, Class II/III Division 1, explosion proof approval
ED	ATEX EEx d IIB T6, Flame-proof approval
K0	Factory Mutual (FM) Class I, Division 2, Class II/III Division 1, approval and Canadian Standards Association (CSA) Class 1, Division 2, Class II/III Division 1 with intrinsically safe fieldbus output
K1	ATEX EEx de [ia] IIB + H2 T6 flameproof approval for hydrogen gas with intrinsically safe fieldbus output and FISCO compliant
K5[1]	Factory Mutual (FM) Class I, Division 1, Explosion Proof with intrinsically safe fieldbus and FISCO output
KD	ATEX EEx d [ia] IIB T6, Flame-proof approval with intrinsically safe fieldbus output and FISCO compliant
Code	**Options**
	PlantWeb Software Functions
D01	Product and process diagnostics: grounding/wiring diagnostic, electrode fault diagnostic, and high process noise detection[2]
D11	Product diagnostic: grounding/wiring diagnostic and electrode fault diagnostic[2]
D21	Process diagnostic: high process noise detection[2]
	Transmitter Options
B4	Remote Mount for 2" Pipe Mount Bracket (transmitter junction box, 316L SST mounting bracket, and galvanized bolts included)
B6	Remote Mount for 2" Pipe Mount Bracket (transmitter junction box, 316L SST mounting bracket and bolts included)
C1	Custom Configuration (completed configuration data sheet (CDS) required with order)
D1	High Accuracy Calibration (0.2% of rate for matched tube and transmitter)[3]
DT	Heavy Duty Tagging
J1	CM 20 Conduit Adapter
J2	PG 13.5 Conduit Adapter
M5	Local Display
	Conduit Electrical Connector
GE[4]	M12, 4-pin, Male Connector (*Eurofast®*)
GM[4]	A size Mini, 4-pin, Male Connector (*Minifast®*)
GN[4]	GM with EEx d

Continued on Next Page

Code	Quick Installation Guide (QIG) Language Options (Default is English)
YA	Danish QIG
YD	Dutch QIG
YF	French QIG
YG	German QIG
YH	Finnish QIG
YI	Italian QIG
YN	Norwegian QIG
YP	Portuguese QIG
YR	Russian QIG
YS	Spanish QIG
YW	Swedish QIG
Typical Model Number: 8742C F AC N 0 D 0 1	

(1) Only available with Rosemount 8711 Integral Mount flowtube sensor

(2) Only one diagnostic selection can be specified for the 8742C transmitter.

(3) D1 Option Code must be ordered with flowtube sensor and transmitter

(4) Not available with certain hazerdous location certifications. Contact a Rosemount representative for details

ROSEMOUNT 8705 ORDERING INFORMATION

Code	Product Description	Availability
8705	Magnetic Flowmeter Flowtube Sensor	•
Code	**Lining Material**	
A	PFA[1]	•
T	PTFE[2]	•
F	ETFE[3]	•
P	Polyurethane[4]	•
N	Neoprene[5]	•
L	Linatex[6]	•
Code	**Electrode Material**	
S	316L Stainless Steel	•
H	Nickel Alloy 276 (UNS N10276)	•
T	Tantalum	•
P	80% Platinum - 20% Iridium	•
N	Titanium	•

		Electrode Material (From Above)				
Code	**Electrode Type**	**Code S**	**Code H**	**Code T**	**Code P**	**Code N**
A	2 Electrodes - Standard	•	•	•	•	•
B	2 Electrodes - Bullet Nose	•	•			
E	3rd Grounding Electrode	•	•	•	•	•

		Lining Material (From Above)				
Code	**Line Size**	**Code A**	**Code T**	**Code F**	**Code P**	**Code N and L**
005	1/2 in	•	•	•	NA	NA
010	1 in	•	•	•	•	•
015	1 1/2 in	•	•	•	•	•
020	2 in.	•	•	•	•	•
030	3 in.	•	•	•	•	•
040	4 in.	•	•	•	•	•
060	6 in.	•	•	•	•	•
080	8 in.	•	•	•	•	•
100	10 in.	•	•	•	•	•
120	12 in.	•	•	•	•	•
140	14 in	•	•	•	•	•
160	16 in.	NA	•	•	•	•
180	18 in	NA	•	NA	•	•
200	20 in	NA	•	NA	•	•
240	24 in	NA	•	NA	•	•
300	30 in	NA	•	NA	•	•
360	36 in	NA	•	NA	•	•

Code	**Flange Material and Type**
C	Carbon Steel Raised Face Slip-On
S	Stainless Steel (304) Raised Face Slip-On
P	Stainless Steel (316) Raised Face Slip-On

Continued on Next Page

Code	Flange Type and Rating	Availability
1	ASME B16.5 ANSI Class 150 (30 and 36 in. AWWA C207 Table 2 Class D Flat Face)	Refer to Table 33 on page 74 for Flange Material Code C Refer to Table 34 on page 74 for Flange Material Codes S and P
2	MSS SP44 Class 150 (30 and 36 in. line sizes only)	
3	ASME B16.5 (ANSI) Class 300	
6	ASME B16.5 (ANSI) Class 600 (Maximum Pressure: 1000 psig)[7]	
7	ASME B16.5 (ANSI) Class 600[8]	
9	ASME B16.5 (ANSI) Class 900[8][9]	
D	EN 1092-1 (DIN) PN 10	Refer to Table 35 on page 75 for Flange Material Code C and S (Not available with Flange Material Code P)
E	EN 1092-1 (DIN) PN 16	
F	EN 1092-1 (DIN) PN 25	
H	EN 1092-1 (DIN) PN 40	
K	AS2129 Table D[10]	
L	AS2129 Table E[10]	
Code	**Electrode Housing Configuration**	
W0	Sealed, Welded Housing[11]	
W1	Sealed, Welded Housing with Pressure Relief	
W3	Sealed, Welded Housing with Separate Electrode Compartments	
Code	**Hazardous Area Approvals**	
NA	CE Marked, No Hazardous Area Approval	
	FM & CSA	
N0	FM Class 1 Div 2 for Non-Flammable fluids; CSA Class 1 Div 2	
N5	FM Class 1 Div 2 for Flammable fluids	
E5[12]	FM Class 1 Div 1, Explosion Proof	
	ATEX	
E1	ATEX Ex e ia IIC T3... T6, Increased Safety Approval (with I.S. electrodes)	
KD	ATEX Ex e ia IIB T3... T6, Increased Safety Approval (with I.S. electrodes)	
N1	ATEX Ex nA [L] IIC Type n Approval	
ND	ATEX Dust Approval	
Code	**Options**	
	Certifications	
PD	Pressure Equipment Directive Certification (PED, per 97/23/EC)	
DW	NSF Drinking Water Certification[13]	
	Optional Grounding Rings[14]	
G1	(2) 316L SST Ground Rings	
G2	(2) Nickel Alloy 276 (UNS N10276) Ground Rings[15]	
G3	(2) Titanium Ground Rings[15]	
G4	(2) Tantalum Ground Rings[16]	
G5	(1) 316L SST Ground Rings	
G6	(1) Nickel Alloy 276 (UNS N10276) Ground Rings[15]	
G7	(1) Titanium Ground Rings[15]	
G8	(1) Tantalum Ground Rings[16]	

Continued on Next Page

	Optional Lining Protectors[14]
L1	(2) 316L SST Lining Protectors
L2	(2) Nickel Alloy 276 (UNS N10276) Lining Protectors[15]
L3	(2) Titanium Lining Protectors[15]
H1	Lay-length matching 8701 using spool piece[15]
H2	Lay-length matching 8701[17]
H5	Lay-length matching Foxboro 2800 using spool piece[18]
H7	Lay-length ABB CopaX and MagX using spool piece[15]
	Other Options
B3	Integral Mount with 8732 and 8742
D1	High Accuracy Calibration (0.15% of rate for matched tube and transmitter)[19]
DT	Heavy Duty Tagging
TA	High Temperature Permeable Fluid Option (Contains vent holes provided for permeable fluids such as nitric acid, hydrofluoric acid, or sodium hydroxide at high temperatures)
Q4	Calibration Certificate per ISO 10474 3.1B
Q8	Material Traceability 3.1B
Q9	Material Traceability Electrode only 3.1B
Q66	Welding Procedure Qualification Record Documentation
Q67	Welding Performance Qualification Record Documentation
Q70	Weld Examination Inspection Certificate, ISO 10474 3.1B
Typical Model Number: 8705 T SA 040 C1 W0 N0	

(1) Available in 1/2 in. to 12 in. line sizes ANSI 150, ANSI 300, and DIN Flanges. Available in 14 in. ANSI 150 only. Not available with electrode housing code W3.

(2) Available in 1/2 in. to 36 in. line sizes ANSI 150, ANSI 300, and DIN Flanges. Available in 1 in. to 10 in. ANSI 600 Derated only.

(3) Available in 1/2 in. to 14 in. line sizes ANSI 150, ANSI 300, and DIN Flanges. Available in 16 in. ANSI 150 only. Available in 1 to 10 in. ANSI 600 Derated only.

(4) Available in 1 in. to 24 in. line sizes ANSI 150, ANSI 300, and DIN Flanges. Available in 30 and 36 in. AWWA Class 125 and ANSI 150. Available in 1 in. to 24 in. ANSI 600 full rated. Available in 1 to 12 in. ANSI 900, ANSI 1500, and ANSI 2500.

(5) Available in 1 in. to 24 in. line sizes ANSI 150, ANSI 300, and DIN Flanges. Available in 30 and 36 in. ANSI 150 only Available in 1 to 24 in. ANSI 600 full rated. Available in 1 in. to 12 in. ANSI 900 only.

(6) Available in 1 in. to 24 in. line sizes ANSI 150, ANSI 300, and DIN Flanges. Available in 30 and 36 in. AWWA Class 125 and ANSI 150. Available in 1 to 24 in. ANSI 600 full rated. Available in 1 in. to 12 in. ANSI 900 only.

(7) Electrode type options limited to two measurement electrodes or two measurement electrodes + third grounding electrode

(8) Electrode type options limited to two measurement electrodes only

(9) Lining protectors not available

(10) Liner material options limited to T, P, or F; cannot be ordered with ground rings, lining protectors, or H(x) options

(11) Available with ANSI 150, ANSI 300, and DIN flanges.

(12) Available in flowtube sensor line sizes 0.5 through 8 in. (15 through 200 mm)

(13) Only available with PTFE (all line sizes) or Polyurethane (4 in. and larger) Liner Materials with 316L SST Electrode Material

(14) Grounding Rings and Lining Protectors provide the same fluid grounding function. Lining Protectors available in PTFE and ETFE only

(15) Available in flowtube sensor line sizes 0.5 through 12 in. (15 through 300 mm)

(16) Available in flowtube sensor line sizes 0.5 through 8 in. (15 through 200 mm)

(17) Available in flowtube sensor line sizes 0.5 through 16 in. (15 through 400 mm)

(18) Available in flowtube sensor line sizes 3 through 18 in. (80 through 450 mm)

(19) D1 Option Code must be ordered with flowtube sensor and transmitter

TABLE 33. Rosemount 8705 Carbon Steel ASME B16.5 (ANSI) Flange Rating Availability

Line Size Code	Line Size Inches (mm)	Class 150 (C1)	Class 150 (C2)	Class 300 (C3)	Class 600 (C6)	Class 600 (C7)	Class 900 (C9)	Class 1500 (JM)	Class 2500 (JN)
005	0.5 (15)	•	NA	•	•	NA	NA	NA	NA
010	1 (25)	•	NA	•	•	•	•	•	•
015	1.5 (40)	•	NA	•	•	•	•	•	•
020	2 (50)	•	NA	•	•	•	•	•	•
030	3 (80)	•	NA	•	•	•	•	•	•
040	4 (100)	•	NA	•	•	•	•	•	•
060	6 (150)	•	NA	•	•	•	•	•	•
080	8 (200)	•	NA	•	•	•	•	•	•
100	10 (250)	•	NA	•	•	•	•	•	•
120	12 (300)	•	NA	•	NA	•	•	•	•
140	14 (350)	•	NA	•	NA	•	NA	NA	NA
160	16 (400)	•	NA	•	NA	•	NA	NA	NA
180	18 (450)	•	NA	•	NA	•	NA	NA	NA
200	20 (500)	•	NA	•	NA	•	NA	NA	NA
240	24 (600)	•	NA	•	NA	•	NA	NA	NA
300[1]	30 (750)	•	•	NA	NA	NA	NA	NA	NA
360[1]	36 (900)	•	•	NA	NA	NA	NA	NA	NA

(1) AWWA C207 Table 2 Class D Flat Face Flange for option C1 Only

TABLE 34. Rosemount 8705 Stainless Steel ASME B16.5 (ANSI) Flange Rating Availability

Line Size Code	Line Size Inches (mm)	Class 150 (S1)	Class 150 (S2)	Class 300 (S3)	Class 600 (S6)	Class 600 (S7)	Class 900 (S9)	Class 150 (P1)	Class 150 (P2)	Class 300 (P3)
005	0.5 (15)	•	NA	•	•	NA	NA	•	NA	•
010	1 (25)	•	NA	•	•	•	•	•	NA	•
015	1.5 (40)	•	NA	•	•	•	•	•	NA	•
020	2 (50)	•	NA	•	•	•	•	•	NA	•
030	3 (80)	•	NA	•	•	•	•	•	NA	•
040	4 (100)	•	NA	•	•	•	•	•	NA	•
060	6 (150)	•	NA	•	•	•	•	•	NA	•
080	8 (200)	•	NA	•	•	•	•	•	NA	•
100	10 (250)	•	NA	•	•	•	•	•	NA	•
120	12 (300)	•	NA	•	NA	•	•	•	NA	•
140	14 (350)	•	NA	•	NA	•	NA	•	NA	•
160	16 (400)	•	NA	•	NA	•	NA	•	NA	•
180	18 (450)	•	NA	•	NA	•	NA	•	NA	•
200	20 (500)	•	NA	•	NA	•	NA	•	NA	•
240	24 (600)	•	NA	•	NA	•	NA	•	NA	•
300[1]	30 (750)	•	•	NA	NA	NA	NA	•	•	NA
360[1]	36 (900)	•	•	NA	NA	NA	NA	•	•	NA

(1) AWWA C207 Table 2 Class D Flat Face Flange for option S1 or P1 Only

TABLE 35. Rosemount 8705 EN 1092-1 (DIN) Flange Rating Availability

Line Size Code	Line Size Inches (mm)	Carbon Steel PN 10 (CD)	Carbon Steel PN 16 (CE)	Carbon Steel PN 25 (CF)	Carbon Steel PN 40 (CH)	Carbon Steel Table D (CK)	Carbon Steel Table E (CL)	Stainless Steel PN 10 (SD)	Stainless Steel PN 16 (SE)	Stainless Steel PN 25 (SF)	Stainless Steel PN 40 (SH)
005	0.5 (15)	NA	NA	NA	•	•	•	NA	NA	NA	•
010	1 (25)	NA	NA	NA	•	•	•	NA	NA	NA	•
015	1.5 (40)	NA	NA	NA	•	•	•	NA	NA	NA	•
020	2 (50)	NA	NA	NA	•	•	•	NA	NA	NA	•
030	3 (80)	NA	NA	NA	•	•	•	NA	NA	NA	•
040	4 (100)	NA	•	NA	•	•	•	NA	•	NA	•
060	6 (150)	NA	•	NA	•	•	•	NA	•	NA	•
080	8 (200)	•	•	•	•	•	•	•	•	•	•
100	10 (250)	•	•	•	•	•	•	•	•	•	•
120	12 (300)	•	•	•	•	•	•	•	•	•	•
140	14 (350)	•	•	•	•	•	•	•	CF	CF	CF
160	16 (400)	•	•	•	•	•	•	•	CF	CF	CF
180	18 (450)	•	•	•	•	•	•	•	CF	CF	CF
200	20 (500)	•	•	•	•	•	•	•	CF	CF	CF
240	24 (600)	•	•	•	•	•	CF	•	CF	CF	CF

ROSEMOUNT 8707 ORDERING INFORMATION

Code	Product Description	Availability
8707	High-Signal Magnetic Flowmeter Flowtube Sensor	•
Code	**Lining Material**	
A	PFA	•
T	PTFE	•
F	ETFE	•
P	Polyurethane	•
N	Neoprene	•
L	Linatex	•
Code	**Electrode Material**	
S	316L Stainless Steel	•
H	Nickel Alloy 276 (UNS N10276)	•
T	Tantalum	•
P	80% Platinum - 20% Iridium	
N	Titanium	•

		Electrode Material (From Above)				
Code	Electrode Type	Code S	Code H	Code T	Code P	Code N
A	2 Electrodes - Standard	•	•	•	•	•
B	2 Electrodes - Bullet Nose	•	•			
E	3rd Grounding Electrode[1]	•	•	•	•	•

		Lining Material (From Above)				
Code	Line Size	Code A	Code T	Code F	Code P	Code N and L
030	3 in.	•	•	•	•	•
040	4 in.	•	•	•	•	•
060	6 in.	•	•	•	•	•
080	8 in.	•	•	•	•	•
100	10 in.	•	•	•	•	•
120	12 in.	•	•	•	•	•
140	14 in	NA	•	•	•	•
160	16 in.	NA	•	•	•	•
180	18 in	NA	•	NA	•	•
200	20 in	NA	•	NA	•	•
240	24 in	NA	•	NA	•	•
300	30 in	NA	•	NA	•	•
360	36 in	NA	•	NA	•	•

Code	Flange Material
C	Carbon Steel
S	Stainless Steel (304)

Code	Flange Type and Rating	Availability
1	ASME B16.5 (ANSI) RF Class 150	
2	MSS SP44 Class 150	
3	ASME B16.5 (ANSI) RF Class 300	

Code	Electrode Housing Configuration
W0	Sealed, Welded Housing
W1	Sealed, Welded Housing with Pressure Relief
W3	Sealed, Welded Housing with Separate Electrode Compartments

Code	Hazardous Area Approvals
NA	No Hazardous Area Approval Required; CE Marking
N0	FM Class 1 Div 2 for Non-Flammable fluids; CSA Class 1 Div 2
N5	FM Class 1 Div 2 for Flammable fluids

Continued on Next Page

Code	Options
	Optional Grounding Rings[2]
G1	(2) 316L SST Ground Rings
G2	(2) Nickel Alloy 276 (UNS N10276) Ground Rings[3]
G3	(2) Titanium Ground Rings[3]
G4	(2) Tantalum Ground Rings[4]
G5	(1) 316L SST Ground Rings
G6	(1) Nickel Alloy 276 (UNS N10276) Ground Rings[3]
G7	(1) Titanium Ground Rings[3]
G8	(1) Tantalum Ground Rings[4]
	Optional Lining Protectors[2]
L1	(2) 316L SST Lining Protectors
L2	(2) Nickel Alloy 276 (UNS N10276) Lining Protectors[3]
L3	(2) Titanium Lining Protectors[3]
	Other Options
H1	Lay-length matching 8701 using spool piece[3]
H2	Lay-length matching 8701[5]
H5	Lay-length matching Foxboro 2800 using spool piece[6]
H7	Lay-length ABB CopaX and MagX using spool piece[3]
B3	Integral Mount with 8732 and 8742
D1	High Accuracy Calibration[7]
D2	Dual Flowtube Sensor Calibration Numbers for Rosemount 8732E, 8712D, and 8742C Transmitters
DT	Heavy Duty Tagging
Q4	Calibration Certificate per ISO 10474 3.1B
Q8	Material Traceability 3.1B
Q9	Material Traceability Electrode only 3.1B
Q66	Welding Procedure Qualification Record Documentation
Q67	Welding Performance Qualification Record Documentation
Q70	Weld Examination Inspection Certificate, ISO 10474 3.1B
Typical Model Number: 8707 T SA 040 C1 W0 N0	

(1) Available for 10 in. (250 mm) and larger line size only

(2) Grounding Rings and Lining Protectors provide the same fluid grounding function. Lining Protectors available in PTFE and ETFE only

(3) Available in flowtube sensor line sizes 3 through 12 in. (15 through 300 mm)

(4) Available in flowtube sensor line sizes 3 through 8 in. (15 through 200 mm)

(5) Available in flowtube sensor line sizes 3 through 16 in. (15 through 400 mm)

(6) Available in flowtube sensor line sizes 3 through 18 in. (15 through 450 mm)

(7) D1 Option Code must be ordered with flowtube sensor and transmitter. Accuracy with 8712H transmitter is 0.25% of rate from 3 to 30 ft/sec (1 to 10 m/sec). Accuracy with 8732E or 8712D transmitters is 0.15% of rate. Accuracy with 8742C transmitter is 0.2% of rate.

TABLE 36. Rosemount 8707 ASME B16.5 (ANSI) Flange Rating Availability

Line Size Code	Line Size Inches (mm)	Carbon Steel Class 150 (C1)	Carbon Steel Class 150 (C2)	Carbon Steel Class 300 (C3)	Stainless Steel Class 150 (S1)	Stainless Steel Class 300 (S3)
030	3 (80)	•	NA	•	•	•
040	4 (100)	•	NA	•	•	•
060	6 (150)	•	NA	•	•	•
080	8 (200)	•	NA	•	•	•
100	10 (250)	•	NA	•	•	•
120	12 (300)	•	NA	•	•	•
140	14 (350)	•	NA	•	•	•
160	16 (400)	•	NA	•	•	•
180	18 (450)	•	NA	•	•	•
200	20 (500)	•	NA	•	•	•
240	24 (600)	•	NA	•	•	•
300[1]	30 (750)	•	•	NA	•	NA
360[1]	36 (900)	•	NA	NA	•	NA

(1) AWWA C207 Table 2 Class D Flat Face Flange for option C1 Only

ROSEMOUNT 8711 ORDERING INFORMATION

Model	Product Description
8711	Magnetic Flowmeter Wafer Flowtube Sensor
Code	**Lining Material**
A	PFA[1]
T	ETFE[2]
S	PTFE[3]
Code	**Electrode Material**
S	316L Stainless Steel
H	Nickel Alloy 276 (UNS N10276)
T	Tantalum
P	80% Platinum - 20% Iridium
N	Titanium
Code	**Electrode Type**
A	2 Electrodes - Standard
B	2 Electrodes - Bullet Nose
E	3rd Grounding Electrode - Standard
Code	**Line Size**
15F	0.15 in. (4 mm)
30F	0.3 in. (8 mm)
005	½ in. (15 mm)
010	1in (25 mm)
015	1½ in. (40mm)
020	2 in. (50mm)
030	3 in. (80 mm)
040	4 in. (100 mm)
060	6 in. (150 mm)
080	8 in. (200 mm)
Code	**Transmitter Mounting Configuration**
R	Remote
U	Integral, mounted to Rosemount 8732E/8742C Transmitter

Continued on Next Page

Code	Mounting Kit
	Expanded Kit: Includes two alignment rings (where applicable), threaded SST studs, and nuts
1	ASME B16.5 (ANSI) Class 150
2	EN 1092-1 (DIN) PN 10/16[4]
3	ASME B16.5 (ANSI) Class 300
4	EN 1092-1 (DIN) PN 25/40[5]
	Standard Kit: Includes two alignment rings (where applicable)
5	ASME B16.5 (ANSI) Class 150
6	EN 1092-1 (DIN) PN 10/16[4]
7	ASME B16.5 (ANSI) Class 300
8	EN 1092-1 (DIN) PN 25/40[5]
Code	**Hazardous Area Approval**
NA	No Hazardous Area Approval Required; CE Marking
	FM & CSA
N0	FM Class 1 Div 2 for Non-Flammable fluids; CSA Class 1 Div 2
N5	FM Class 1 Div 2 for Flammable fluids
E5	FM Class 1 Div 1, Explosion Proof
	ATEX
E1	ATEX Ex e ia IIC T3... T6, Increased Safety Approval (with I.S. electrodes)
KD	ATEX Ex e ia IIB T3... T6, Increased Safety Approval (with I.S. electrodes)
N1	ATEX Ex nA [L] IIC Type n Approval
ND	ATEX Dust Approval
Code	**Options**
	Certifications
PD	Pressure Equipment Directive Certification (PED, per 97/23/EC)
DW	NSF Drinking Water Certification[6]
	Optional Grounding Rings
G1	(2) 316L SST Ground Rings
G2	(2) Nickel Alloy 276 (UNS N10276) Ground Rings
G3	(2) Titanium Ground Rings
G4	(2) Tantalum Ground Rings
	Other Options
D1	High Accuracy Calibration (0.15% of rate for matched tube and transmitter)[7]
DT	Heavy Duty Tagging
Q4	Calibration Certificate per ISO 10474 3.1B
Q8	Material Traceability 3.1B
Q9	Material Traceability Electrode only 3.1B
Q66	Welding Procedure Qualification Record Documentation[8]
Q67	Welding Performance Qualification Record Documentation[8]
Q70	Weld Examination Inspection Certificate, ISO 10474 3.1B[8]
Typical Model Number: 8711 TSA 020 R 5 N0	

(1) Available with 0.15 and 0.30 in. (4 and 8 mm) line sizes only

(2) Not available with 0.15 and 0.30 in. (4 and 8 mm) line sizes

(3) Not available with 0.15 and 0.30 in. (4 and 8 mm) line sizes

(4) 8 in. (200 mm) has a PN 10 mounting kit only

(5) 8 in. (200 mm) has a PN 25 mounting kit only

(6) Only available with PTFE Liner Material with 316L SST Electrode Material

(7) D1 Option Code must be ordered with flowtube sensor and transmitter

(8) 6 and 8 in. (150 and 200 mm) line sizes only

ROSEMOUNT 8721 ORDERING INFORMATION

Model	Product Description
8721	Sanitary Magnetic Flowmeter
Code	**Lining Material**
A	PFA
Code	**Electrode Material**
S	316L SST (standard)
H	Nickel Alloy 276 (UNS N10276)
P	80% Platinum-20% Iridium
Code	**Electrode Construction**
A	Standard measurement electrodes
Code	**Line Sizes**
005	15 mm (1/2 in.)
010	25 mm (1 in.)
015	40 mm (1 1/2 in.)
020	50 mm (2.0 in.)
025	65 mm (2 1/2 in.)
030	80 mm (3.0 in.)
040	100 mm (4.0 in.)
Code	**Transmitter Mounting Configuration**
R	Remote, for use with 8712, or remote version of 8732/8742 transmitter
U	Integral, mounted to 8732/8742 transmitter
X	Flowtube Sensor only (does not include terminal junction box)
Code	**Process Connection Type**
A	Tri-Clamp [1]
B	IDF Sanitary screw type [2]
C	ANSI Weld Nipple [2]
D	DIN 11851 (Imperial)
E	DIN 11851 (Metric)
F	DIN 11864-1 form A
G	DIN 11864-2 form A
H	SMS Connection
J	Cherry-Burrell I-Line
K	DIN 11850 Weld Nipple
Code	**Process Gasket Material**
1	Silicone gasket seal
2	EPDM
4	Viton
8	EPDM Compression - limiting [3]
9	Viton Compression - limiting [3]
X	No gasket (User supplied; only applicable with Process Connection B)

Continued On Next Page

Code	Product Certifications
NA	CE Marking; 3A; EHEDG Type EL[3]; no hazardous location approvals
N0	Factory Mutual (FM) Ordinary Location; CSA; CE Marking; 3-A; EHEDG Type EL[3]
Code	**Options**
AH	Electropolished process connection surface finish < 15µinch Ra (0.38µm Ra)
D1	High Accuracy Calibration [0.25% of rate from 3-30 ft/s (0.9-10 m/s)] matched flowtube sensor and transmitter system
D3	High Velocity Calibration Verification. Calibration verified at 1, 3, 10 and 20 ft/sec (0.3. 1, 3, and 6 m/s)
HD	DanFoss Lay Length
HP	Process Data PD340 (Alfa-Laval PD340) 250mm lay length and Tri-Clamp process connections
J1	CM20 Conduit Adapter (Applies to Transmitter Mount Option "R" only)
J2	PG13.5 Conduit Adapter (Applies to Transmitter Mount Option "R" only)
Q4	Inspection Certification for Calibration Data
Q8	Material Traceability Certificate per ISO 10474 3.1B (product contact surfaces)
SJ	304 Stainless Steel terminal junction box (Remote configuration only)
Typical Model Number: 8721 A S A 020 U A 1 N0	

(1) Tri-Clamp specification per BPE-2002

(2) IDF Specification per BS4825 Part 4

(3) EHEDG Document 8 requires mechanical compression limiting, provided by Compression - limiting gaskets for line sizes 1- 4 in. only.

ROSEMOUNT 8714D ORDERING INFORMATION

Model	Description
8714DQ4	Reference Calibration Standard

Tagging

The flowtube sensor and transmitter will be tagged, at no charge, in accordance with customer requirements.

Transmitter tag character height is 0.125 in. (3.18 mm).
Flowtube Sensor tag: 40 character maximum.
Transmitter tag: see Configuration Data Sheet for character maximum.

Ordering Procedure

To order, select the desired flowtube sensor and/or transmitter by specifying model codes from the ordering table.

For remote transmitter applications, note the cable specification requirements.

Flowtube Sensors and transmitters must be selected from Product Data Sheet 00813-0100-4727.

Standard Configuration

Unless the Configuration Data Sheet is completed, the transmitter will be shipped as follows:

Engineering Units:	ft/sec
4 mA (1 V DC):	0
20 mA (5 V DC):	30
Tube Size:	3-in.
Empty Pipe:	Off
Flowtube Sensor Calibration Number:	1000005010000000

The Rosemount 8732E and the 8742C Transmitter are factory-calibrated with the attached flowtube sensor size and appropriate calibration number.

Cable Requirements for Remote Transmitters

Description	Length	P/N
Signal Cable (20 AWG) Belden 8762, Alpha 2411 equivalent	ft m	08712-0061-0001 08712-0061-0003
Coil Drive Cable (14 AWG) Belden 8720, Alpha 2442 equivalent	ft m	08712-0060-0001 08712-0060-0003
Combination Signal and Coil Drive Cable (18 AWG)(1)	ft m	08712-0752-0001 08712-0752-0003

(1) Combination signal and coil drive cable is not recommended for high-signal magmeter system. For remote mount installations, combination signal and coil drive cable should be limited to less than 330 ft (100 m).

Remote transmitter installations require equal lengths of signal and coil drive cables. Integrally mounted transmitters are factory wired and do not require interconnecting cables.

Lengths from 5 to 1,000 feet (1.5 to 300 meters) may be specified, and will be shipped with the flowtube sensor. Cable longer than 100 feet (30 meters) is not recommended for high-signal systems.

Custom Configuration (Option Code C1)

If Option Code C1 is ordered, the Configuration Data Sheet (CDS) must be submitted at the time of order.

Configuration Data Sheets

ROSEMOUNT 8732E CONFIGURATION DATA SHEET

CONFIGURATION DATA SHEET
(Unless otherwise specified, transmitter will be shipped as ★*Default Factory Configuration*).

Customer: _____ P.O No: _____

Transmitter Model No: _____ Line Item: _____

Transmitter Tag Name:
|_|_|_|_|_|_|_|_|_|_|_|_|_|_|_|_|_|_|_|_|_|_|_|_|_|_|_|_|_|_|

|_|_|_|_|_|_|_|_|_|_|_|_|_|_|_|_|_|_|_|_|_|_|_|_|_|_|_|_|_|_|

Transmitter Tag (Software): |_|_|_|_|_|_|_|_| (8 characters maximum)

Descriptor: |_|_|_|_|_|_|_|_|_|_|_|_|_|_|_|_| (16 characters maximum) Date (day/month/year): |_|_| |_|_| |_|_|

Message:
|_|_|_|_|_|_|_|_|_|_|_|_|_|_|_|_|_|_|_|_|_|_|_|_|_|_|_|_|_|_|_|_|_| (32 characters maximum)

OUTPUT INFORMATION (Minimum Information Necessary for Startup)

Fluid Description = _____

Units =

Volumetric Units

- ☐ ACFD
- ☐ ft3/day
- ☐ ACFH
- ☐ ft3/hr
- ☐ ACFM
- ☐ ft3/min
- ☐ ACFS
- ☐ ft3/sec
- ☐ MMACFD
- ☐ m3/day
- ☐ m3/hr
- ☐ m3/min
- ☐ m3/sec
- ☐ MMACMD
- ☐ cc/day
- ☐ cc/hr
- ☐ cc/min
- ☐ cc/sec
- ☐ USBPD
- ☐ USBPH
- ☐ USBPM
- ☐ USBPS
- ☐ USBPD (Beer)
- ☐ USBPH (Beer)
- ☐ USBPM (Beer)
- ☐ USBPS (Beer)
- ☐ IMPBPD
- ☐ IMPBPH
- ☐ USGPD
- ☐ USGPH
- ☐ USGPM
- ☐ USGPS
- ☐ IMPGPD
- ☐ IMPGPH
- ☐ IMPGPM
- ☐ IMPGPS
- ☐ L/day
- ☐ L/hr
- ☐ L/min
- ☐ L/sec

Mass Units(1)

- ☐ lb/day
- ☐ lb/hr
- ☐ lb/min
- ☐ lb/sec
- ☐ kg/day
- ☐ kg/hr
- ☐ kg/min
- ☐ kg/sec
- ☐ g/hr
- ☐ g/min
- ☐ g/sec
- ☐ ton/day
- ☐ ton/hr
- ☐ ton/min
- ☐ ton/sec
- ☐ Ton (M)/day
- ☐ Ton (M)/hr
- ☐ Ton (M)/min
- ☐ Ton (M)/sec

Velocity Units

- ☐ ★**ft/sec**
- ☐ m/sec

☐ Special (Fill out the information in the box below. Examples on back side)

①Volume Units = |_|_|_|_| *(4 characters)*
②Base Units
☐ Gallons Imp. Gallons
☐ Liters Cubic Meters
☐ Feet Meters
③Conversion No. _____
④Time Base
☐ Hours Minute
☐ Day Second
⑤Rate Units = |_|_|_|_| *(4 characters)*

Density/Density Ratio Value(2) = _____ **(★62.4)**

Density Units
☐ ★**lb/ft3** ☐ kg/m3

20 mA (Full Scale) Value = ★ ***30 ft/sec*** _____
4mA (Zero) Value = ★ ***0.0 ft/sec*** _____
Damping = ★ ***2.0 seconds*** _____

Flowrate Display	☐ ★ ***Eng Units and % span***	☐ Eng Units and Gross Total	☐ % Span and Gross Total
Totalizer Display	☐ ★ ***Net and Gross***	☐ Forward and Reverse	

Continued On Next Page

Continued from Previous Page

Hardware Jumpers

A) Write Protect	☐★ ***Off***	☐ On	**Local Display Language:** ☐ ★ **English**	☐ Spanish
B) Analog Loop Power	☐★ ***Internal***	☐ External	☐ French	☐ German
C) Pulse Output: Internal or External	☐ Internal	☐ ★***External***	☐ Portuguese	
D) Alarm Option	☐★ ***High***	☐ Low		
Flowtube Sensor Size = _____	.15 – 60" ★ 3"			

Flowtube Sensor Calibration No.: |_|_|_|_|_|_|_|_|_|_|_|_|_|_|_|_|_| 16 Digits from flowtube sensor ★ ***1000005010000000***

SPECIAL UNITS – OUTPUT INFORMATION EXAMPLE
(If applicable, complete the information on the front as shown in the examples below).

Example 1:
User wants Barrels per day
(1 Barrel = 31 gallons):

①Vol Unit = BARL
②Base Units = Gallons
③Conversion No. = 31.0
④Time Base = Day
⑤Rate Units = B/DY

Example 2:
User wants Kgs per minute
(Density = 1.05 Kg/Liter with 1 Kg = 0.9524 liters):

①Vol Unit = Kg
②Base Units = Liters
③Conversion No. = 0.9524
④Time Base = Minute
⑤Rate Units = Kg/m

Basic Diagnostics Information

Empty Pipe
☐ Enable
☐ Disable★
Trigger Level _____ 100★
Empty Pipe Counts _____ 5★

Electronics Temperature
☐ Enable
☐ Disable★

Advanced Diagnostics Information (Requires DA1 Option)

High Process Noise
☐ **Enable★**
☐ Disable

Grounding/Wiring Faults
☐ **Enable★**
☐ Disable

NOTE
If DA1 is selected in the model code, Empty Pipe and Electronics Temp Diagnostics will also be enabled.

8714i Meter Verification Diagnostic (Requires DA2 Option)

Test Criteria:
Empty Pipe: _____ **(★5%)**
Flowing Full: _____ **(★3%)**
Full, No Flow: _____ **(★2%)**

NOTE
The Test Criteria value sets the pass fail value for the meter calibration verification check. This value must be an integer value between 1 and 10%.

Digital Input / Digital Output Information (Requires AX Option)

Digital Input
☐ **Enable★**
☐ Disable

Digital Input Configuration
☐ **Positive Zero Return (PZR)★**
☐ Totalizer Reset
☐ Transmitter Reset

Digital Output
☐ **Enable★**
☐ Disable

Digital Output Configuration
☐ **Empty Pipe★**
☐ Zero Flow
☐ Reverse Flow
☐ Transmitter Fault

Continued On Next Page

AUXILIARY OUTPUT INFORMATION (Not Required for Typical Start-up)

Pulse Scaling:
- ☐ ★*.03 ft*
- ☐ 1 Pulse = _____ units

Low Flow Cutoff:
- _____ ★ *0.04 ft/sec*

Pulse Width:
- _____ ★ *0.5 m/s*

Operation Mode:
- ☐ ★ ***Normal***
- ☐ Filter (Operating Mode for 8712H is not available.)

Coil Pulse Mode:
- ☐ ★ ***5 Hz (Default)***
- ☐ 37.5 Hz

Signal Processing:
- ☐ ★ ***Off***
- ☐ On
- _____ ★ ***90*** No. Samples
- _____ ★ ***2*** Max.% Limit %
- _____ ★ ***2*** Time Limit Sec

FLOWTUBE SENSOR INFORMATION (Data Only – Does Not Affect Transmitter Output)

SST Flowtube Sensor Tag No.: _____

Flowtube Sensor Serial No: |_|_|_|_|_|_|_| (7 characters maximum)

Enter either the Rosemount flowtube sensor model number or select one option from each of the following groups of options:
Flowtube Sensor Model No._____
Or:

Electrode Material:
- ☐ ★*316 SST*
- ☐ Titanium
- ☐ Alloy-20
- ☐ *Nickel Alloy 276 (UNS N10276)*®
- ☐ Tantalum
- ☐ Platinum-Iridium
- ☐ Special

Electrode Type:
- ☐ ★ ***Standard***
- ☐ Bullet
- ☐ Standard, plus Grounding
- ☐ Special

Flange Material:
- ☐ ★***Carbon Steel***
- ☐ 304 SST
- ☐ Special

Liner Material:
- ☐ ★ **PTFE**
- ☐ ETFE
- ☐ Polyurethane
- ☐ Neoprene
- ☐ Special

☐ ★ ***4–20 mA and scaled pulse with simultaneous digital signal based on HART® protocol***
☐ Burst mode of *HART* digital process variable

Burst mode output options:
- ☐ Primary variable in engineering units.
- ☐ Primary variable in percent of range.
- ☐ All dynamic variables in engineering units.
- ☐ All dynamic variables in engineering units and the primary variable mA value.

☐ Multidrop Communications(3)
Choose transmitter address (1-15)(4): _____

(1) Mass units require a process density. Standard/Normal units require a density ratio.

(2) Required for mass or standard/normal flow units.

(3) This option fixes the transmitter's analog output at 4 mA.

(4) Default transmitter address is 1 if multidrop communication is selected.

ROSEMOUNT 8712D CONFIGURATION DATA SHEET

CONFIGURATION DATA SHEET
(Unless otherwise specified, transmitter will be shipped as ★*Default Factory Configuration*).

Customer: _____ P.O No: _____

Transmitter Model No: _____ Line Item: _____
Transmitter Tag Name:
|_|_|_|_|_|_|_|_|_|_|_|_|_|_|_|_|_|_|_|_|_|_|_|_|_|_|_|_|_|_|_|_|

|_|_|_|_|_|_|_|_|_|_|_|_|_|_|_|_|_|_|_|_|_|_|_|_|_|_|_|_|_|_|_|_|
Transmitter Tag (Software): |_|_|_|_|_|_|_|_| (8 characters maximum)

Descriptor: |_|_|_|_|_|_|_|_|_|_|_|_|_|_|_|_| (16 characters maximum) Date (day/month/year): |_|_| |_|_| |_|_|

Message:
|_|_|_|_|_|_|_|_|_|_|_|_|_|_|_|_|_|_|_|_|_|_|_|_|_|_|_|_|_|_|_|_| (32 characters maximum)

OUTPUT INFORMATION (Minimum Information Necessary for Startup)

Fluid Description = _____
Units =

Volumetric Units

- ☐ ACFD
- ☐ ft3/day
- ☐ ACFH
- ☐ ft3/hr
- ☐ ACFM
- ☐ ft3/min
- ☐ ACFS
- ☐ ft3/sec
- ☐ MMACFD
- ☐ m3/day
- ☐ m3/hr
- ☐ m3/min
- ☐ m3/sec
- ☐ MMACMD
- ☐ cc/day
- ☐ cc/hr
- ☐ cc/min
- ☐ cc/sec
- ☐ USBPD
- ☐ USBPH
- ☐ USBPM
- ☐ USBPS
- ☐ USBPD (Beer)
- ☐ USBPH (Beer)
- ☐ USBPM (Beer)
- ☐ USBPS (Beer)
- ☐ IMPBPD
- ☐ IMPBPH
- ☐ USGPD
- ☐ USGPH
- ☐ USGPM
- ☐ USGPS
- ☐ IMPGPD
- ☐ IMPGPH
- ☐ IMPGPM
- ☐ IMPGPS
- ☐ L/day
- ☐ L/hr
- ☐ L/min
- ☐ L/sec

Mass Units(1)

- ☐ lb/day
- ☐ lb/hr
- ☐ lb/min
- ☐ lb/sec
- ☐ kg/day
- ☐ kg/hr
- ☐ kg/min
- ☐ kg/sec
- ☐ g/hr
- ☐ g/min
- ☐ g/sec
- ☐ ton/day
- ☐ ton/hr
- ☐ ton/min
- ☐ ton/sec
- ☐ Ton (M)/day
- ☐ Ton (M)/hr
- ☐ Ton (M)/min
- ☐ Ton (M)/sec

Velocity Units

- ☐ ★**ft/sec**
- ☐ m/sec

☐ Special (Fill out the information in the box below. Examples on back side)

①Volume Units = |_|_|_|_| *(4 characters)*
②Base Units

☐ Gallons	Imp. Gallons
☐ Liters	Cubic Meters
☐ Feet	Meters

③Conversion No. _____
④Time Base

☐ Hours	Minute
☐ Day	Second

⑤Rate Units = |_|_|_|_| *(4 characters)*

Density/Density Ratio Value(2) = _____ **(★62.4)**

Density Units
☐ ★**lb/ft3** ☐ kg/m3

20 mA (Full Scale) Value = ★ ***30 ft/sec*** _____
4mA (Zero) Value = ★ ***0.0 ft/sec*** _____
Damping = ★ ***2.0 seconds*** _____

Flowrate Display	☐ ★ ***Eng Units and % span***	☐ Eng Units and Gross Total	☐ % Span and Gross Total
Totalizer Display	☐ ★ ***Net and Gross***	☐ Forward and Reverse	

Continued On Next Page

Hardware Switches

A) Write Protect	☐★ ***Off***	☐ On
B) Analog Loop Power	☐★ ***Internal***	☐ External
C) Alarm Option	☐★ ***High***	☐ Low
Flowtube Sensor Size = ____	.15 – 60" ★ **3"**	

Flowtube Sensor Calibration No. |_|_|_|_|_|_|_|_|_|_|_|_|_|_|_|_| 16 Digits from flowtube sensor ★ ***1000005010000000***

SPECIAL UNITS – OUTPUT INFORMATION EXAMPLE
(If applicable, complete the information on the front as shown in the examples below).

Example 1:
User wants Barrels per day
(1 Barrel = 31 gallons):

①Vol Unit = BARL
②Base Units = Gallons
③Conversion No. = 31.0
④Time Base = Day
⑤Rate Units = B/DY

Example 2:
User wants Kgs per minute
(Density = 1.05 Kg/Liter with 1 Kg = 0.9524 liters):

①Vol Unit = Kg
②Base Units = Liters
③Conversion No. = 0.9524
④Time Base = Minute
⑤Rate Units = Kg/m

Basic Diagnostics Information

Empty Pipe
☐ Enable
☐ Disable★
Trigger Level _____ 100★
Empty Pipe Counts _____ 5★

Electronics Temperature
☐ Enable
☐ Disable★

Advanced Diagnostics Information (Requires DA1 Option)

High Process Noise
☐ Enable★
☐ Disable

Grounding/Wiring Faults
☐ Enable★
☐ Disable

NOTE
If DA1 is selected in the model code, Empty Pipe and Electronics Temp Diagnostics will also be enabled.

AUXILIARY OUTPUT INFORMATION (Not Required for Typical Start-up)

Pulse Scaling:
☐ ★***.03 ft***
☐ 1 Pulse = _____ units

Auxiliary Output Control:
☐ ★ ***Zero Flow***
☐ Reverse Flow

Low Flow Cutoff:
_____ ★ ***0.04 ft/sec***

Pulse Width:
_____ ★ ***0.5 m/s***

Operation Mode:
☐ ★ ***Normal***
☐ Filter (Operating Mode for 8712H is not available.)

Coil Pulse Mode:
☐ ★ ***5 Hz (Default)***
☐ 37.5 Hz

Signal Processing:
☐ ★ ***Off***
☐ On
_____ ★ ***90*** No. Samples
_____ ★ ***2*** Max.% Limit %
_____ ★ ***2*** Time Limit Sec

Continued On Next Page

FLOWTUBE SENSOR INFORMATION (Data Only – Does Not Affect Transmitter Output)

SST Flowtube Sensor Tag No.: _____

Flowtube Sensor Serial No: |_|_|_|_|_|_|_| (7 characters maximum)

Enter either the Rosemount flowtube sensor model number or select one option from each of the following groups of options:
Flowtube Sensor Model No _____
Or:

Electrode Material:
- ☐ ★***316 SST***
- ☐ Titanium
- ☐ Alloy-20
- ☐ *Nickel Alloy 276 (UNS N10276)*®
- ☐ Tantalum
- ☐ Platinum-Iridium
- ☐ Special

Flange Material:
- ☐ ★***Carbon Steel***
- ☐ 304 SST
- ☐ Special

Electrode Type:
- ☐ ★ ***Standard***
- ☐ Bullet
- ☐ Standard, plus Grounding
- ☐ Special

Liner Material:
- ☐ ★ **PTFE**
- ☐ ETFE
- ☐ Polyurethane
- ☐ Neoprene
- ☐ Special

☐ ★ ***4–20 mA, scaled pulse, and auxiliary output with simultaneous digital signal based on HART® protocol***
☐ Burst mode of *HART* digital process variable

Burst mode output options:
- ☐ Primary variable in engineering units.
- ☐ Primary variable in percent of range.
- ☐ All dynamic variables in engineering units.
- ☐ All dynamic variables in engineering units and the primary variable mA value.

☐ Multidrop Communications(3)
Choose transmitter address (1-15)(4): _____

(1) Mass units require a process density. Standard/Normal units require a density ratio.

(2) Required for mass or standard/normal flow units.

(3) This option fixes the transmitter's analog output at 4 mA.

(4) Default transmitter address is 1 if multidrop communication is selected.

ROSEMOUNT 8712H CONFIGURATION DATA SHEET

CONFIGURATION DATA SHEET
(Unless otherwise specified, transmitter will be shipped as ★*Default Factory Configuration*).

Customer: _____ P.O No: _____

Transmitter Model No: _____ Line Item: _____

Transmitter Tag Name:
|_|_|_|_|_|_|_|_|_|_|_|_|_|_|_|_|_|_|_|_|_|_|_|_|_|_|_|_|_|_|_|_|

|_|_|_|_|_|_|_|_|_|_|_|_|_|_|_|_|_|_|_|_|_|_|_|_|_|_|_|_|_|_|_|_|

Transmitter Tag (Software): |_|_|_|_|_|_|_|_| (8 characters maximum)

Descriptor: |_|_|_|_|_|_|_|_|_|_|_|_|_|_|_|_| (16 characters maximum) Date (day/month/year): |_|_| |_|_| |_|_|

Message:
|_|_|_|_|_|_|_|_|_|_|_|_|_|_|_|_|_|_|_|_|_|_|_|_|_|_|_|_|_|_|_|_| (32 characters maximum)

OUTPUT INFORMATION (Minimum Information Necessary for Startup)

Fluid Description = _____

Units =
- ☐ ★ ***Ft/Sec***
- ☐ Gal/Sec ☐ Gal/Min ☐ Gal/Hr ☐ Gal/Day
- ☐ Liters/Sec ☐ Liters/Min ☐ Liters/Hr ☐ Liters/Day
- ☐ Imp. Gal/Sec ☐ Imp. Gal/Min ☐ Imp. Gal/Hr ☐ Imp. Gal/Day
- ☐ CuMeters/Sec ☐ CuMeters/Min ☐ CuMeters/Hr ☐ CuMeters/Day
- ☐ Meters/Sec
- ☐ Special (Fill out the information in the box below. Examples on back side.)

20 mA (Full Scale) Value = ★ ***30 ft/sec*** _____
4mA (Zero) Value = ★ ***0.0 ft/sec*** _____
Damping = ★ ***2.0 seconds*** _____

Flowrate Display	☐ ★ ***Eng Units and % span***	☐ Eng Units and Gross Total	☐ % Span and Gross Total
Totalizer Display	☐ ★ ***Net and Gross***	☐ Forward and Reverse	

Hardware Jumpers

A) Write Protect	☐★ ***Off***	☐ On
B) Analog Loop Power	☐★ ***Internal***	☐ External
C) Alarm Option	☐★ ***High***	☐ Low

Flowtube Sensor Size = ____ **3" – 36" ★ 3"**

①Volume Units = |_|_|_|_| *(4 characters)*
②Base Units
☐ Gallons ☐ Imp. Gallons
☐ Liters ☐ Cubic Meters
☐ Feet ☐ Meters
③Conversion No. _____
④Time Base
☐ Hours ☐ Minute
☐ Day ☐ Second
⑤Rate Units = |_|_|_|_| *(4 characters)*

Flowtube Sensor Calibration No.: |_|_|_|_|_|_|_|_|_|_|_|_|_|_|_|_| 16 Digits from flowtube sensor ★ ***1000005010000000***

SPECIAL UNITS – OUTPUT INFORMATION EXAMPLE
(If applicable, complete the information on the front as shown in the examples below).

Example 1:
User wants Barrels per day
(1 Barrel = 31 gallons):

①Vol Unit = BARL
②Base Units = Gallons
③Conversion No. = 31.0
④Time Base = Day
⑤Rate Units = B/DY

Example 2:
User wants Kgs per minute
(Density = 1.05 Kg/Liter with 1 Kg = 0.9524 liters):

①Vol Unit = Kg
②Base Units = Liters
③Conversion No. = 0.9524
④Time Base = Minute
⑤Rate Units = Kg/m

Continued On Next Page

AUXILIARY OUTPUT INFORMATION (Not Required for Typical Start-up)

Empty Pipe Functionality:
- ☐ ★ **Off**
- ☐ **On**

Pulse Scaling:
- ☐ ★***.03 ft***
- ☐ 1 Pulse = _____ units

Auxiliary Output Control:
- ☐ ★ ***Zero Flow***
- ☐ Reverse Flow

Low Flow Cutoff:
_____ ★ ***0.1 ft/sec***

Pulse Width:
_____ ★ ***0.5 m/s***

Operation Mode:
- ☐ ★ ***Normal***
- ☐ Filter

Signal Processing:
- ☐ ★ ***Off***
- ☐ On

_____ ★ ***90*** No. Samples
_____ ★ ***2*** Max.% Limit %
_____ ★ ***2*** Time Limit Sec

☐ Multidrop Communications[1]
Choose transmitter address (1-15)[2]: _____

FLOWTUBE SENSOR INFORMATION (Data Only – Does Not Affect Transmitter Output)

SST Flowtube Sensor Tag No.: _____

Flowtube Sensor Serial No: |_|_|_|_|_|_|_| (7 characters maximum)

Enter either the Rosemount flowtube sensor model number or select one option from each of the following groups of options:
Flowtube Sensor Model No _____
Or:

Electrode Material:
- ☐ ★***316 SST***
- ☐ Titanium
- ☐ Alloy-20
- ☐ *Nickel Alloy 276 (UNS N10276)*®
- ☐ Tantalum
- ☐ Platinum-Iridium
- ☐ Special

Electrode Type:
- ☐ ★ ***Standard***
- ☐ Bullet
- ☐ Standard, plus Grounding
- ☐ Special

Flange Material:
- ☐ ★***Carbon Steel***
- ☐ 304 SST
- ☐ Special

Liner Material:
- ☐ ★ **PTFE**
- ☐ ETFE
- ☐ Polyurethane
- ☐ Neoprene
- ☐ Special

☐ ★ ***4–20 mA, scaled pulse, and auxiliary output with simultaneous digital signal based on HART® protocol***
☐ 4–20 mA and auxiliary output with simultaneous digital signal based on *HART* protocol (Rosemount 8732E only)
☐ Burst mode of *HART* digital process variable

Burst mode output options:
- ☐ Primary variable in engineering units.
- ☐ Primary variable in percent of range.
- ☐ All dynamic variables in engineering units.
- ☐ All dynamic variables in engineering units and the primary variable mA value

(1) This option fixes the transmitter's analog output at 4 mA.

(2) Default transmitter address is 1 if multidrop communication is selected.

ROSEMOUNT 8742C CONFIGURATION DATA SHEET.

CONFIGURATION DATA SHEET

Unless otherwise specified, transmitter will be shipped as ★ *(default factory configuration)*

Customer:_____ P.O. No.: _____

Transmitter Model No.:_____ Item:_____

Transmitter Tag (software):

|_|_|_|_|_|_|_|_|_|_|_|_|_|_|_|_|_|_|_|_|_|_|_|_|_|_|_|_|_|_|_|_|

|_|_|_|_|_|_|_|_|_|_|_|_|_|_|_|_|_|_|_|_|_|_|_|_|_|_|_|_|_|_|_|_|

Descriptor: |_|_|_|_|_|_|_|_|_|_|_|_|_|_|_|_|_|_|_|_|_|_|_|_|_|_|_|_|_|_|_|_|

(32 characters maximum)

OUTPUT INFORMATION (Minimum Information Necessary for Startup)

Fluid Description:_____

Units =

☐ ★ ***Ft/Sec***	☐ Ft/Min	☐ Ft/Hr	☐ Ft/d
☐ m/Sec	☐ m/Min	☐ m/Hr	☐ m/d
☐ Gal/Sec	☐ Gal/Min	☐ Gal/Hr	☐ Gal/d
☐ m^3/Sec	☐ m^3/Min	☐ m^3/Hr	☐ m^3/d
☐ cm^3/Sec	☐ cm^3/Min	☐ cm^3/Hr	☐ cm^3/d
☐ Ft^3/Sec	☐ Ft^3/Min	☐ Ft^3/Hr	☐ Ft^3/d
☐ Liters/Sec	☐ Liters/Min	☐ Liters/Hr	☐ Liters/d
☐ Igal/Sec	☐ Igal/Min	☐ Igal/Hr	☐ Igal/d
☐ bbl*/Sec	☐ bbl/Min	☐ bbl/Hr	☐ bbl/d
☐ cF/Sec	☐ cF/Min	☐ cF/Hr	☐ cF/d
☐ *lb/Sec*	☐ *lb/Min*	☐ *lb/Hr*	☐ *lb/d*
☐ *kg/Sec*	☐ *kg/Min*	☐ *kg/Hr*	☐ *kg/d*
☐ *ton/Sec*	☐ *ton/Min*	☐ *ton/Hr*	☐ *ton/d*
☐ *ston/Sec*	☐ *ston/Min*	☐ *ston/Hr*	☐ *ston/d*

*bbl = 31.5 gal US (119 liters)

Hardware Jumpers

A) Write Protect ☐★ ***Off*** ☐ On

B) Simulate ☐★ ***Off*** ☐ On

Flowtube Sensor Size = _____ 0.15 – 60" ★ ***3"***

Flowtube Sensor Calibration No. = ★ ***1000005010000000***

|_|_|_|_|_|_|_|_|_|_|_|_|_|_|_|_|

SST Flowtube Sensor Tag No.:_____

Damping:_____

★ ***minimum 0 seconds***

Density _____ ☐ ★ *62.4 lb/ft³*

☐ kg/m³

(required for mass units only, mass units in italics)

AUXILIARY OUTPUT INFORMATION (Normally Not Required for Typical Start-up)

Coil Pulse Mode: ☐ ★ ***5 Hz*** ☐ 37.5 Hz

Empty pipe functionality: ☐★ ***Off*** ☐ On

Low Flow Cutoff_____ft/sec ★ ***0.04***
(minimum of 0 ft/sec for low flow cutoff)

Local Display Language: ☐ ★ **English** ☐ Spanish ☐ French ☐ German

Continued On Next Page

FLOWTUBE SENSOR INFORMATION (Data Only – Does Not Affect Transmitter Output)

Flowtube Sensor Serial No.: |_|_|_|_|_|_|_|_|_|_|_|_|_|_|_|_|_|_|_|_|_|_|_|_|_|_|_|_|_|_|_|_|
(32 characters maximum)

Enter either the Rosemount flowtube sensor model number or select one option from each of the following groups of options:

Flowtube Sensor Model No.:_____

Or:

Electrode Material:

- ☐ ★ ***316 SST***
- ☐ Titanium
- ☐ Alloy-20
- ☐ Other
- ☐ Tantalum
- ☐ Platinum-Iridium
- ☐ *Hastelloy®* C-276

Electrode Type:

- ☐ ★ ***Standard***
- ☐ Bulletnose
- ☐ Standard and Grounding Electrodes
- ☐ Removable
- ☐ Other

Liner Material:

- ☐ ★ **PTFE**
- ☐ ETFE
- ☐ PFA
- ☐ Polyurethane
- ☐ Natural Rubber
- ☐ *Linatex® Rubber*
- ☐ Neoprene
- ☐ Other

Flange Material:

- ☐ 304 SST
- ☐ 316L SST
- ☐ Other
- ☐★ *Carbon Steel*
- ☐ Wafer

Flange Type:

- ☐ ★ ***ASME B16.5 (ANSI) Class 150***
- ☐ ASME B16.5 (ANSI) Class 300
- ☐ ASME B16.5 (ANSI) Class 600
- ☐ ASME B16.5 (ANSI) Class 900
- ☐ Wafer
- ☐ DIN PN 10
- ☐ DIN PN 16
- ☐ DIN PN 25
- ☐ DIN PN 40
- ☐ DIN PN 64
- ☐ Other

Rosemount 8700 Series

Product Data Sheet
00813-0100-4727, Rev RA
December 2007

Rosemount and the Rosemount logotype are registered trademarks of Rosemount Inc.
The Emerson logo is a trade mark and service mark of Emerson Electric Co.
PlantWeb is a mark of one of the Emerson Process Management companies.
All other marks are the property of their respective owners.
PlantWeb and DeltaV are trademarks of the Fisher-Rosemount Group of Companies.
HART is a registered trademark of the HART Communication Foundations.
Foundation is a trademark of the Fieldbus Foundation.
Hastelloy and Hastelloy C are registered trademarks of Haynes International.
Teflon and Tefzel are registered trademarks of E.I. du Pont de Nemours &Co.
Tri-Clamp is a registered trademark of Tri-Clover, Inc. of the Alfa-Laval Group.
Foxboro and I/A Series are registered trademarks of the Foxboro Company.
ABB Fischer & Porter is a registered trademark of ABB Company.
Eurofast and Minifast are registered trademarks of Turck Inc.
Cover Photo: 8700_01ba.tif

Standard Terms and Conditions of Sale can be found at www.rosemount.com\terms_of_sale

Emerson Process Management

Rosemount Inc.
8200 Market Boulevard
Chanhassen, MN 55317 USA
T (U.S.) 1-800-999-9307
T (International) (952) 906-8888
F (952) 949-7001

Emerson Process Management Flow
Neonstraat 1
6718 WX Ede
The Netherlands
T +31 (0)318 495555
F +31(0) 318 495556

Emerson Process Management
Singapore Pte Ltd.
1 Pandan Crescent
Singapore 128461
Tel (65) 6777-8211
Fax (65) 6777-0947
Enquiries@AP.EmersonProcess.com

www.rosemount.com

© 2007 Rosemount Inc. All rights reserved.

EMERSON.
Process Management

Quick Installation Guide
00825-0100-4051, Rev BA
June 2009

Rosemount 3051

Rosemount 3051 Pressure Transmitter
Includes Transmitter Option TR

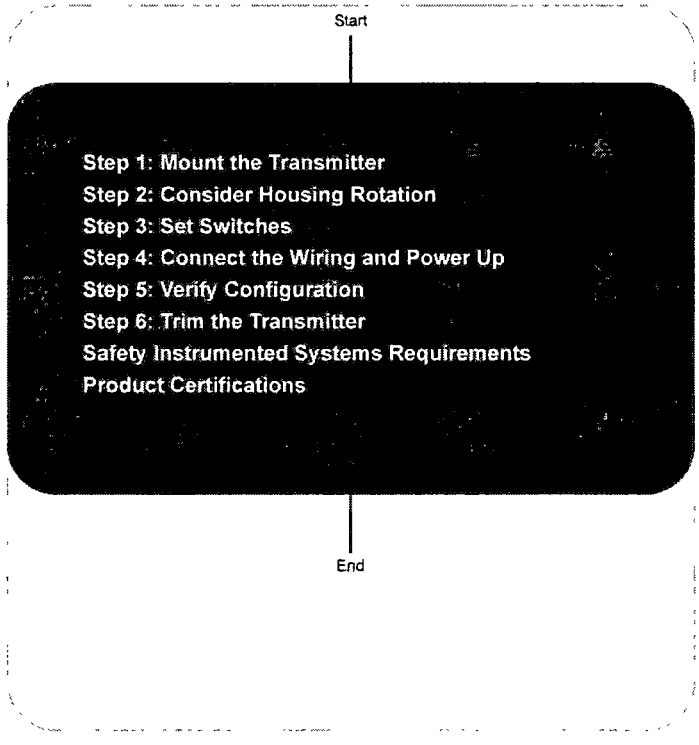

HART® CE

ROSEMOUNT

www rosemount com

EMERSON.
Process Management

© 2009 Rosemount Inc All rights reserved All marks property of owner
Rosemount and the Rosemount logotype are registered tredemarks of Rosemount Inc

Emerson Process Management Rosemount Division
8200 Market Boulevard
Chanhassen, MN USA 55317
T (US) (800) 999-9307
T (Intnl) (952) 906-8888
F (952) 949-7001

Emerson Process Management Asia Pacific Private Limited
1 Pandan Crescent
Singapore 128461
T (65) 6777 8211
F (65) 6777 0947/65 6777 0743

Emerson Process Management GmbH & Co. OHG
Argelsrieder Feld 3
82234 Wessling
Germany
T 49 (8153) 9390, F49 (8153) 939172

Beijing Rosemount Far East Instrument Co., Limited
No 6 North Street, Hepingli, Dong Cheng District
Beijing 100013, China
T (86) (10) 6428 2233
F (86) (10) 6422 8586

⚠ IMPORTANT NOTICE

This installation guide provides basic guidelines for Rosemount 3051C/T transmitters (reference manual document number 00809-0100-4051). It does not provide instructions for diagnostics, maintenance, service, or troubleshooting This document is also available electronically on www.emersonprocess.com/rosemount.

⚠ WARNING

Explosions could result in death or serious injury:
Installation of this transmitter in an explosive environment must be in accordance with the appropriate local, national, and international standards, codes, and practices. Please review the approvals section of the 3051C/T reference manual for any restrictions associated with a safe installation.

- Before connecting a HART communicator in an explosive atmosphere, ensure the instruments in the loop are installed in accordance with intrinsically safe or non-incendive field wiring practices.
- In an Explosion-Proof/Flame-Proof installation, do not remove the transmitter covers when power is applied to the unit.

Process leaks may cause harm or result in death.

- Install and tighten process connectors before applying pressure.

Electrical shock can result in death or serious injury.

- Avoid contact with the leads and terminals. High voltage that may be present on leads can cause electrical shock.

STEP 1: MOUNT THE TRANSMITTER

Liquid Flow Applications

1. Place taps to the side of the line.
2 Mount beside or below the taps.
3 Mount the transmitter so that the drain/vent valves are oriented upward.

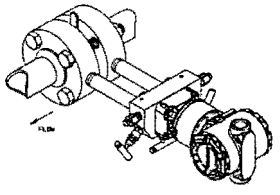

Gas Flow Applications

1. Place taps in the top or side of the line.
2. Mount beside or above the taps

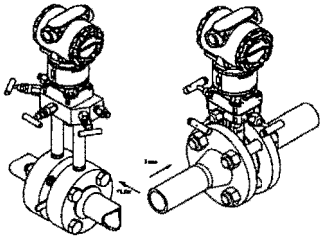

Steam Flow Applications

1. Place taps to the side of the line
2 Mount beside or below the taps.
3 Fill impulse lines with water

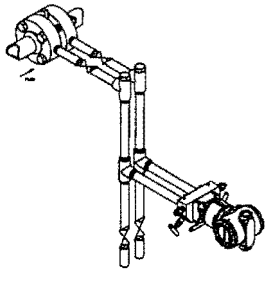

STEP 1 CONTINUED...

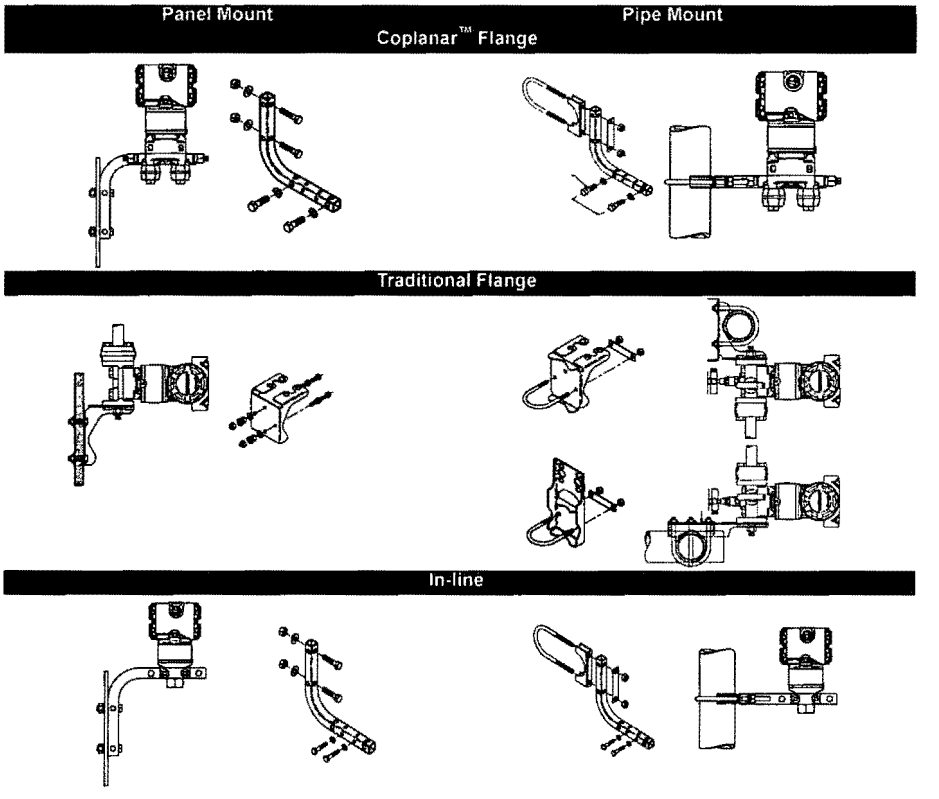

STEP 1 CONTINUED...

Bolting Considerations

If the transmitter installation requires assembly of the process flanges, manifolds, or flange adapters, follow these assembly guidelines to ensure a tight seal for optimal performance characteristics of the transmitters. Use only bolts supplied with the transmitter or sold by Emerson as spare parts. Figure 1 illustrates common transmitter assemblies with the bolt length required for proper transmitter assembly.

Figure 1. Common Transmitter Assemblies

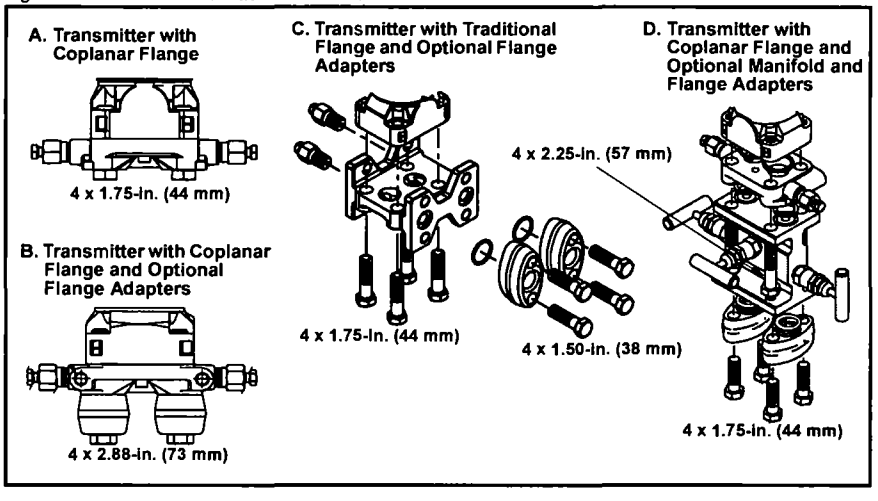

Bolts are typically carbon steel or stainless steel. Confirm the material by viewing the markings on the head of the bolt and referencing Figure 2 If bolt material is not shown in Figure 2, contact the local Emerson Process Management representative for more information.

Use the following bolt installation procedure:

1 Carbon steel bolts do not require lubrication and the stainless steel bolts are coated with a lubricant to ease installation. However, no additional lubricant should be applied when installing either type of bolt.
2. Finger-tighten the bolts.
3. Torque the bolts to the initial torque value using a crossing pattern. See Figure 2 for initial torque value.
4. Torque the bolts to the final torque value using the same crossing pattern. See Figure 2 for final torque value.
5 Verify that the flange bolts are protruding through the isolator plate before applying pressure

STEP 1 CONTINUED...

Figure 2 Torque values for the flange and flange adapter bolts

Bolt Material	Head Markings	Initial Torque	Final Torque
Carbon Steel (CS)	B7M	300 in -lbs.	650 in -lbs
Stainless Steel (SST)	316 B8M 316 316 Ⓡ STM 316 SW 316	150 in -lbs.	300 in -lbs.

O-rings with Flange Adapters

⚠ WARNING

Failure to install proper flange adapter O-rings may cause process leaks, which can result in death or serious injury. The two flange adapters are distinguished by unique O-ring grooves. Only use the O-ring that is designed for its specific flange adapter, as shown below.

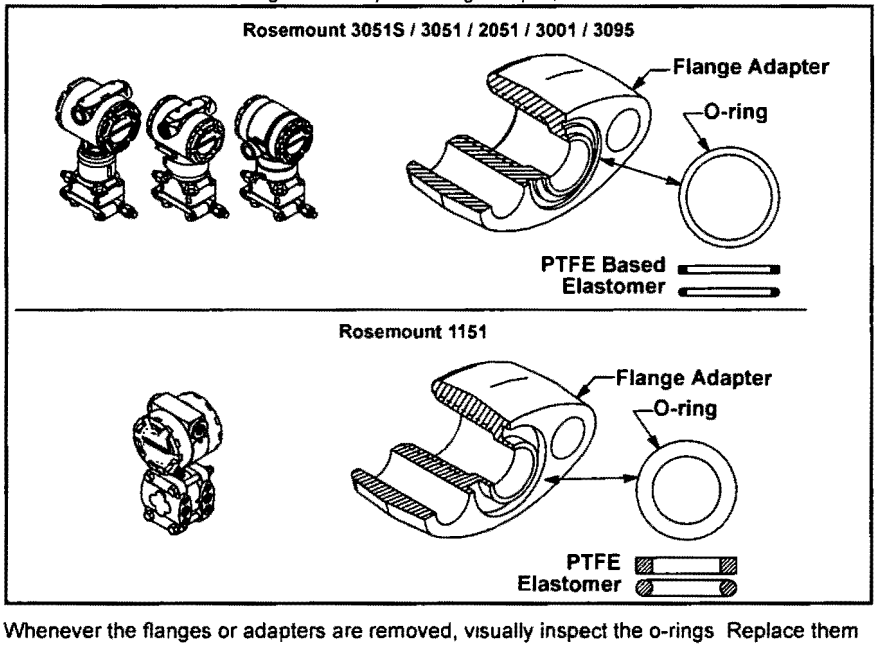

⚠ Whenever the flanges or adapters are removed, visually inspect the o-rings. Replace them if there are any signs of damage, such as nicks or cuts. If you replace the o-rings, re-torque the flange bolts and alignment screws after installation to compensate for seating of the PTFE o-ring.

STEP 1 CONTINUED...

Inline Gage Transmitter Orientation

The low side pressure port (atmospheric reference) on the inline gage transmitter is located in the neck of the transmitter, behind the housing. The vent path is 360° around the transmitter between the housing and sensor. (See Figure 3)

Keep the vent path free of any obstruction, including but not limited to paint, dust, and lubrication by mounting the transmitter so that the process can drain away.

Figure 3 Inline Gage Transmitter

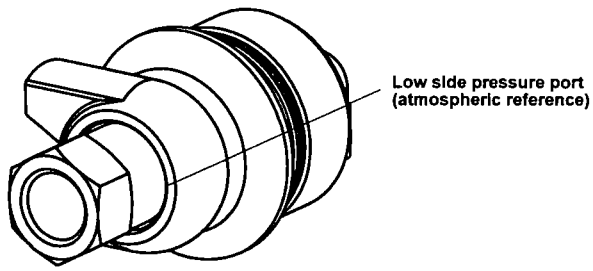

STEP 2: CONSIDER HOUSING ROTATION

To improve field access to wiring or to better view the optional LCD display:

1. Loosen the housing rotation set screw.
2. First, using a $^{5}/_{64}$-in. hex wrench, rotate the housing clockwise to the desired location. If the desired location cannot be achieved due to thread limit, rotate the housing counter clockwise to the desired location (up to 180° from thread limit).
3. Retighten the housing rotation set screw.

Figure 4.

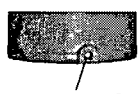

STEP 3: SET SWITCHES (OPTION D1)

If alarm and security adjustment option is not installed, the transmitter will operate normally with the default alarm condition alarm *high* and the security *off*.

Figure 5

Transmitter Switch Configuration	
Without LCD Display	With LCD Display

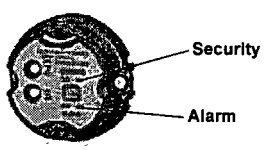

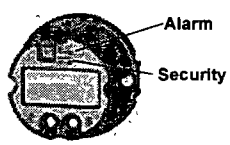

Slide the security and alarm switches into the preferred position by using a small screwdriver

STEP 4: CONNECT WIRING AND POWER UP

Use the following steps to wire the transmitter.

1. Remove the housing cover labeled "Field Terminals."
2. Connect the positive lead to the "+" terminal, and the negative lead to the "–" terminal

NOTE
Do not connect the power across the test terminals. Power could damage the test diode in the test connection. Twisted pairs yield best results; shielded signal wiring is not necessary. Use 24 AWG or larger wire and do not exceed 5,000 feet (1500 meters).

3. Plug and seal unused conduit connections.
4. If applicable, install wiring with a drip loop. Arrange the drip loop so the bottom is lower than the conduit connections and the transmitter housing.
5. Replace the housing cover.

The figures below show the wiring connections necessary to power a 3051C/T and enable communications with a hand-held HART communicator

Transmitter Wiring (4-20 mA / HART)

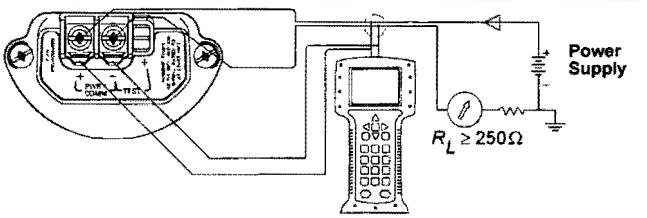

Installation of the transient protection terminal block does not provide transient protection unless the 3051 case is properly grounded.

STEP 4 CONTINUED...

Signal Wiring Grounding

Do not run signal wiring in conduit or open trays with power wiring, or near heavy electrical equipment. Grounding terminations are provided on the outside of the sensor module and inside the Terminal Compartment. These grounds are used when transient protect terminal blocks are installed or to fulfill local regulations See Step 2 below for more information on how the cable shield should be grounded.

1. Remove the Field Terminals housing cover.
2. Connect the wiring pair and ground as indicated in Figure 6. The cable shield should:
   a. Be trimmed close and insulated from touching the transmitter housing.
   b. Continuously connect to the termination point.
   c. Be connected to a good earth ground at the power supply end.

Figure 6 Wiring

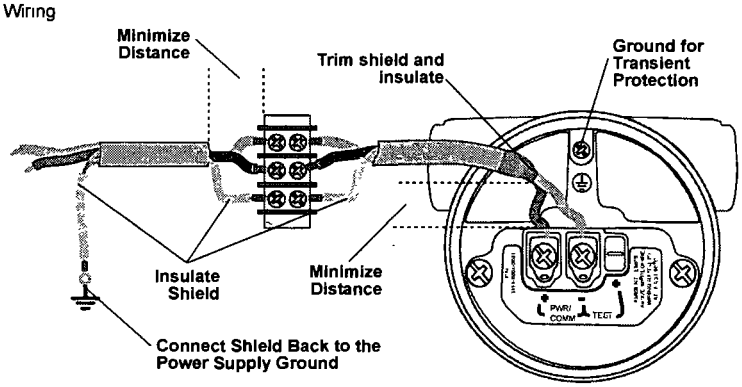

3. Replace the housing cover. It is recommended that the cover be tightened until there is no gap between the cover and the housing.
4. Plug and seal unused conduit connections.

STEP 4 CONTINUED...

Power Supply

The dc power supply should provide power with less than two percent ripple. The total resistance load is the sum of the resistance of the signal leads and the load resistance of the controller, indicator, and related pieces. Note that the resistance of intrinsic safety barriers, if used, must be included.

Figure 7 Load Limitation

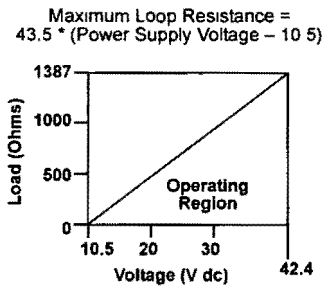

The HART communicator requires a minimum loop resistance of 250Ω for communication

STEP 5: VERIFY CONFIGURATION

A check (√) indicates the basic configuration parameters. At minimum, these parameters should be verified as part of the configuration and startup procedure.

Table 1 HART Fast Key Sequence

	Function	Fast Key Sequence
	Alarm Level Configuration	1, 4, 2, 7, 7
	Alarm and Saturation Levels Configuration	1, 4, 2, 7
	Analog Output Alarm Direction Configuration	1, 4, 2, 7, 6
	Analog Output Trim	1, 2, 3, 2
	Burst Mode On/Off	1, 4, 3, 3, 3
	Burst Options	1, 4, 3, 3, 4
√	Damping	1, 3, 6
	Date	1, 3, 4, 1
	Descriptor	1, 3, 4, 2
	Digital To Analog Trim (4-20 mA Output)	1, 2, 3, 2, 1
	Field Device Information	1, 4, 4, 1
	LCD Meter Configuration	1, 3, 7
	Loop Test	1, 2, 2
	Lower Sensor Trim	1, 2, 3, 3, 2
	Message	1, 3, 4, 3
	Number of Requested Preambles	1, 4, 3, 3, 2
	Pressure Alert Configuration	1, 4, 3, 5, 3
	Poll Address	1, 4, 3, 3, 1
	Poll a Multidropped Transmitter	Left Arrow, 4, 1, 1
	Remapping	1, 4, 3, 6, 4
	Rerange- Keypad Input	1, 2, 3, 1, 1
	Saturation Level Configuration	1, 4, 2, 7, 8
	Scaled D/A Trim (4–20 mA Output)	1, 2, 3, 2, 2
	Scaled Variable Configuration	1, 4, 3, 4, 7
	Self Test (Transmitter)	1, 2, 1, 1
	Sensor Information	1, 4, 4, 2
	Sensor Temperature	1, 1, 4
	Sensor Trim	1, 2, 3, 3
	Sensor Trim Points	1, 2, 3, 3, 5
	Status	1, 2, 1, 2
√	Tag	1, 3, 1
	Temperature Alert Configuration	1, 4, 3, 5, 4
√	Transfer Function (Setting Output Type)	1, 3, 5
	Transmitter Security (Write Protect)	1, 3, 4, 5
√	Units (Process Variable)	1, 3, 2
	Upper Sensor Trim	1, 2, 3, 3, 3
	Zero Trim	1, 2, 3, 3, 1

STEP 6: TRIM THE TRANSMITTER

Transmitters are shipped fully calibrated per request or by the factory default of full scale (lower range value = zero, upper range value = upper range limit).

Zero Trim

A zero trim is a single-point adjustment used for compensating mounting position and line pressure effects. When performing a zero trim, ensure that the equalizing valve is open and all wet legs are filled to the correct level.

If zero offset is less than 3% of true zero, follow the "Using the HART Communicator" instructions below to perform a zero trim. If zero offset is greater than 3% of true zero, follow the "Using the Transmitter Zero Adjustment Button" instructions below to rerange. If hardware adjustments are not available, see the 3051 Reference Manual (document number 00809-0100-4051) to perform a rerange using the HART Communicator.

Using the HART Communicator

HART Fast Keys	Steps
1, 2, 3, 3, 1	1 Equalize or vent the transmitter and connect HART communicator 2. At the menu, input the HART Fast Key sequence. 3 Follow the commands to perform a zero trim.

Using the Transmitter Zero Adjustment Button

Push and hold the zero adjustment button for at least two seconds but no longer than ten seconds

Without LCD Display	With LCD Display

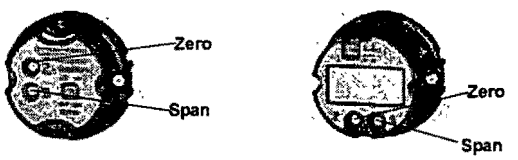

SAFETY INSTRUMENTED SYSTEMS

Additional Safety Instrumented Systems information is available in the Rosemount 3051 reference manual (document number 00809-0100-4051). The manual is available electronically on www.emersonprocess com/rosemount or by contacting an Emerson Process Management representative.

3051 Safety Certified Identification

All 3051 transmitters must be identified as safety certified before installing into SIS systems. To identify a safety certified 3051, verify that QT is included in the transmitter model code.

Installation

No special installation is required in addition to the standard installation practices outlined in this document. Always ensure a proper seal by installing the electronics housing cover(s) so that metal contacts metal.

Environmental limits are available in the 3051 Product Data Sheet (document number 00813-0100-4051). This document can be found at *www emersonprocess.com/rosemount/safety/certtechdocumentation htm*

The loop should be designed so the terminal voltage does not drop below 10 5 Vdc when the transmitter output is 22 5 mA.

If hardware security switches are installed, the security switch should be in the "ON" position during normal operation. See Figure 5 on page 7. If hardware security switches are not installed, security should be "ON" in the software to prevent accidental or deliberate change of configuration data during normal operation.

Configuration

Use any HART-compliant master to communicate with and verify configuration of the 3051 SIS (see Table 1 on page 11 and 9 to verify configuration). User-selected damping will affect the transmitters ability to respond to changes in the applied process. The *damping value + response time* should not exceed the loop requirements.

NOTE
Transmitter output is not safety-rated during the following: configuration changes, multidrop, and loop test. Alternative means should be used to ensure process safety during transmitter configuration and maintenance activities.

Alarm and Saturation Levels

DCS or safety logic solver should be configured to match transmitter configuration. Figure 8 identifies the three alarm levels available and their operation values

Figure 8 Alarm Levels

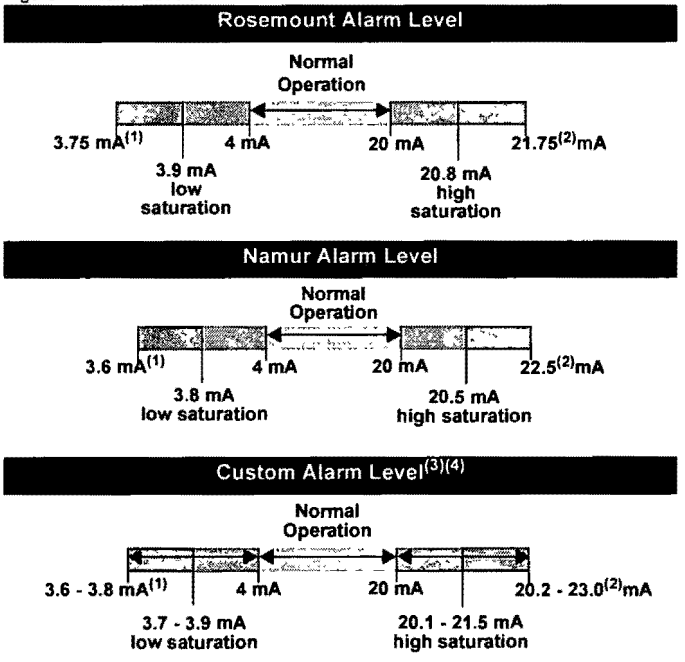

(1) Transmitter Failure, hardware or software alarm in LO position
(2) Transmitter Failure, hardware or software alarm in HI position
(3) High alarm must be at least 0 1 mA higher than the high saturation value.
(4) Low alarm must be at least 0 1 mA lower than the low saturation value.

Setting the alarm values and direction is dependent on whether or not the hardware switch option is installed. You can use a HART master or communicator to set the Alarm and Saturation values.

Switches installed

1. If using a communicator, use the following fast key sequence to set the Alarm and Saturation values.
   Alarm Levels - Fast Key, 1, 4, 2, 7, 7
   Saturation Levels - Fast Key; 1, 4, 2, 7, 8
2. Manually set the direction for the Alarm to HI or LO using the ALARM switch as shown in Figure 5 on page 7.

Switches not installed

1. If using a communicator, use the following fast key sequence to set the Alarm and Saturation values and the Alarm Direction.
   Alarm Levels - Fast Key; 1, 4, 2, 7, 7
   Saturation Levels - Fast Key; 1, 4, 2, 7, 8
   Alarm Direction Fast Key; 1, 4, 2, 7, 6

Operation and Maintenance

Proof Test and Inspection

The following proof tests are recommended Proof test results and corrective actions taken must be documented at *www.emersonprocess.com/rosemount/safety/certtechdocumentation.htm* in the event that an error is found in the safety functionality.

Use "Table 1· HART Fast Key Sequence" to perform a Loop Test, Analog Output Trim, or Sensor Trim. See the 3051 reference manual for additional information.

Five-Year[1] Proof-Test

Conducting an analog output Loop Test satisfies the proof test requirements and will detect more than 52% of DU failures not detected by the 3051C or 3051L automatic diagnostics, and more than 62% of DU failures not detected by the 3051T automatic diagnostics.

Required tools: HART host/communicator and mA meter.

1. On HART host/communicator enter the Fast Key Sequence 1, 2, 2.
2. Select "4 Other."
3. Enter the milliampere value representing a high alarm state.
4. Check the reference meter to verify the mA output corresponds to the entered value.
5. Enter the milliampere value representing a low alarm state.
6. Check the reference meter to verify the mA output corresponds to the entered value.
7. Document the test results per your requirements.

Ten-Year Proof-Test

This proof test, when combined with the Five-Year Proof-Test, will detect over 92% of DU failures not detected by the 3051C or 3051L automatic diagnostics, and over 95% of DU failures not detected by the 3051T automatic diagnostics.

Required tools: HART host/communicator and pressure calibration equipment.

1. Perform a minimum two point sensor calibration check using the 4-20mA range points as the calibration points.
2. Check the reference mA meter to verify the mA output corresponds to the pressure input value.
3. If necessary, use one of the "Trim" procedures available in the 3051 reference manual to calibrate.
4. Document the test results per your requirements.

NOTE
The user determines the proof-test requirements for impulse piping.

Visual Inspection

Not required.

(1) May be a longer proof test interval as justified by PFDavg calculation

Special Tools

Not required.

Product Repair

All failures detected by the transmitter diagnostics or by the proof-test must be reported. Feedback can be submitted electronically at *www emersonprocess com/rosemount/safety/certtechdocumentation.htm.*

The 3051 is repairable by major component replacement. Follow the instructions in the 3051 reference manual (document number 00809-0100-4051) for additional information

Reference

Certification

The 3051 SIS was designed, developed, and audited to be compliant to IEC 61508 Safety certified SIL 2 Claim Limit.

Specifications

The 3051 SIS must be operated in accordance to the functional and performance specifications provided in the 3051 reference manual.

Failure Rate Data

The FMEDA report includes failure rates and common cause Beta factor estimates. Contact your Emerson Process Management representative to obtain a copy

3051 SIS Safety Failure Values

Safety accuracy: 2.0%(1)

Safety response time: 1.5 second

Product Life

50 years – based on worst case component wear-out mechanisms – not based on wear-out process wetted materials

(1) A 2% variation of the transmitter mA output is allowed before a safety trip. Trip values in the DCS or safety logic solver should be derated by 2%

PRODUCT CERTIFICATIONS

Approved Manufacturing Locations

Emerson Process Management - Rosemount Inc — Chanhassen, Minnesota, USA
Emerson Process Management — Wessling, Germany
Emerson Process Management Asia Pacific Private Limited — Singapore
Emerson Process Management — Beijing, China
Emerson Process Management — Daman, India
Emerson Process Management — Sorocaba, Brazil

European Directive Information

The EC declaration of conformity can be found on page 22. The most recent revision can be found at www.emersonprocess.com.

Ordinary Location Certification for Factory Mutual

As standard, the transmitter has been examined and tested to determine that the design meets basic electrical, mechanical, and fire protection requirements by FM, a nationally recognized testing laboratory (NRTL) as accredited by the Federal Occupational Safety and Health Administration (OSHA).

Hazardous Locations Certifications

North American Certifications

Factory Mutual (FM)

E5 Explosion-Proof for Class I, Division 1, Groups B, C, and D. Dust-Ignition-Proof for Class II, Division 1, Groups E, F, and G. Dust-Ignition-Proof for Class III, Division 1. T5 (Ta = 85 °C), Factory Sealed, Enclosure Type 4x

I5 Intrinsically Safe for use in Class I, Division 1, Groups A, B, C, and D; Class II, Division 1, Groups E, F, and G; Class III, Division 1 when connected per Rosemount drawing 03031-1019; Non-incendive for Class I, Division 2, Groups A, B, C, and D. Temperature Code:T4 (Ta = 70 °C), T5 (Ta = 40 °C), Enclosure Type 4x
For input parameters see control drawing 03031-1019.

Canadian Standards Association (CSA)

All CSA hazardous approved transmitters are certified per ANSI/ISA 12.27.01-2003.

E6 Explosion-Proof for Class I, Division 1, Groups B, C, and D. Dust-Ignition-Proof for Class II and Class III, Division 1, Groups E, F, and G Suitable for Class I, Division 2 Groups A, B, C, and D. Enclosure Type 4X, factory sealed; Single Seal Class I Zone 1 Ex d IIC T5.

C6 Explosion-Proof and Intrinsically Safe approval Intrinsically Safe for Class I, Division 1, Groups A, B, C, and D when connected in accordance with Rosemount drawings 03031-1024. Temperature Code T3C, Single Seal.
Explosion-Proof for Class I, Division 1, Groups B, C, and D. Dust-Ignition-Proof for Class II and Class III, Division 1, Groups E, F, and G. Suitable for Class I, Division 2 Groups A, B, C, and D hazardous locations Enclosure type 4X, factory sealed, Single Seal.

European Certifications

I1 ATEX Intrinsic Safety and Dust
Certification No.. BAS 97ATEX1089X ⟨Ex⟩ II 1 GD
Ex ia IIC T4 (Tamb = –60 to +70 °C)
Ex tD A20 T80 °C (Tamb –20 to 40 °C) IP66/IP68
CE 1180

ATEX I1 Input Parameters
U_i= 30 V
I_i = 200 mA
P_i = 0.9 W
C_i = 0.012 µF
L_i = 0.0

Special Conditions for Safe Use (X):
When the optional transient protection terminal block is installed, the apparatus is not capable of withstanding the 500V insulation test required by Clause 6.3.12 of EN60079-11 This must be taken into account when installing the apparatus.

N1 ATEX Non-incendive/Type n and Dust
Certification No.: BAS 00ATEX3105X ⟨Ex⟩ II 3 GD
Ex nL IIC T5 (T_{amb} = –40 to +70 °C)
U_i = 42.4 Vdc max
Ex tD A22 T80 °C (T_{amb} = –20 to 40 °C) IP66/IP68
CE

Special Conditions for Safe Use (X):
When the optional transient protection terminal block is installed, the apparatus is not capable of withstanding a 500V r.m.s. by Clause 6.8.1 of EN60079-15 test to case. This must be taken into account on any installation in which it is used, for example by assuring that the supply to the apparatus is galvanically isolated.

E8 ATEX Flameproof and Dust
Certification No.. KEMA 00ATEX2013X ⟨Ex⟩ II 1/2 GD
Ex d IIC T6 (T_{amb} = –50 to 65 °C)
Ex d IIC T5 (T_{amb} = –50 to 80 °C)
Ex tD A20/A21 T90 °C, IP66/IP68
CE 1180
Vmax = 42 4 V dc

Special Conditions for Safe Use (X):

This device contains a thin wall diaphragm. Installation, maintenance, and use shall take into account the environmental conditions to which the diaphragm will be subjected The manufacturer's instructions for installation and maintenance shall be followed in detail to assure safety during its expected lifetime

Japanese Certifications

Approvals pending, consult factory for availability.

E4 TIIS Flameproof
Ex d IIC T6

Certificate	Description
TC18213	3051CD/CG/L 4-20mA HART (with meter)
TC18214	3051CD/CG/L 4-20 mA HART (no meter)
TC18215	3051CA 4-20mA HART (with meter)
TC18216	3051CA 4-20 mA HART (no meter)
TC18217	3051T 4-20mA HART (with meter)
TC18218	3051T 4-20 mA HART (no meter)
TC18219	3051CD/CG/L 4-20mA HART (with meter), Dual Housing

I4 TIIS Intrinsic Safety
Pending

Australian Certifications

I7 SAA Intrinsic Safety
Certification No.: AUS EX 1249X
Ex ia IIC T4 (T_{amb} = 70 °C)
Ex ia I
IP66
When connected per Rosemount drawing 03031-1026
Special Conditions for Safe Use (X):
The apparatus may only be used with a passive current limited power source Intrinsic Safety application. The power source must be such that Po ≤ (Uo * Io) / 4.

Modules using transient protection in the terminal assembly (T1 transient protection models) the apparatus enclosure is to be electrically bonded to the protective earth The conductor used for the connection shall be equivalent to a copper conductor of 4 mm^2 minimum cross-sectional area.

It is a condition of safe use that the following parameters are to be taken into account for Instrinsic Safety Applications.

SAA Approved Input Parameters
U_i = 30 V
I_i = 200 mA
I_i = 160 mA (Option Code T1)
P_i = 0 9 W
C_i = 0.01 µF (Output Code A)
L_i = 10 µH
L_i = 1,05 mH (Output Code A with T1)

E7 SAA Flame-Proof and Dust
Certification No.: AUS Ex 03.1347X
Ex d IIC T6 (T_{amb} = 40 °C)
Ex d IIC T5 (T_{amb} = 80 °C)
DIP A21 T6 (T_{amb} = 40 °C)
DIP A21 T5 (T_{amb} = 80 °C)
IP66
Special Conditions for Safe Use (X):
It is a condition of safe use for transmitter enclosures having cable entry thread other than metric conduit thread that the equipment be utilized with an appropriate certified thread adaptor or cable gland.
It is a condition of safe use, where only one entry is used for connection to external circuits, that the unused entry shall be closed by means of the blanking plug supplied by the manufacturer or a suitable certified blanking plug.
It is a condition of safe use that the irrelevant explosion protection marking code shall be permanently scribed off the certification marking label upon completion of commissioning, where the equipment is supplied with a certification marking label showing more than one explosion protection marking code.

N7 SAA Type n (Non-sparking)
Certification No.. AUS EX 1249X
Ex n IIC T4 (T_{amb} = 70 °C) / T5
IP66
Special Conditions for Safe Use (X):
Where the equipment is installed such that there is an unused conduit entry, it must be sealed with a suitable blanking plug to maintain the IP66 degree of protection. Any blanking plug used with the equipment shall be of a type which requires the use of a tool to effect its removal

Inmetro Certifications

E2 Flame-Proof
BR-Ex d IIC T6/T5

I2 Intrinsic Safety
BR-Ex ia IIC T4

China (NEPSI) Certifications

E3 Flame-Proof and Dust
Certificate No : GYJ091065X
Ex d IIC T5/T6
DIP A21 T_A T90 °C
IP66
Special Conditions for Safe Use (X):
The symbol "X" placed after the certificate number indicates special conditions for safe use, that is the transmitter contains a thin wall diaphragm. Installation maintenance and use shall not only take into account the environmental conditions but also follow the manufacturer's instructions.

I3 Intrinsic Safety
Certificate No.: GYJ091066X
Ex ia IIC T4/T5
DIP A21 T_A T80 °C
Special Conditions for Safe Use (X):
The symbol "X" placed after the certificate number indicates special conditions for safe use, that is the transmitter contains a thin wall diaphragm. Installation maintenance and use shall not only take into account the environmental conditions but also follow the manufacturer's instructions.

Combinations of Certifications

Stainless steel certification tag is provided when optional approval is specified. Once a device labeled with multiple approval types is installed, it should not be reinstalled using any other approval types. Permanently scratch off or mark unused approval types on the approval label

K5 **E5** and **I5** combination
KB **K5** and **C6** combination
K6 **C6**, **I1**, and **E8** combination
K8 **E8** and **I1** combination
K7 **E7**, **I7**, and **N7** combination
KD **K5, C6, I1,** and **E8** combination

ROSEMOUNT

CE

EC Declaration of Conformity

No: RMD 1017 Rev. L

We,

Rosemount Inc.
8200 Market Boulevard
Chanhassen, MN 55317-9685

declare under our sole responsibility that the product,

Models 3051 & 3001 Pressure Transmitters

manufactured by,

Rosemount Inc.		
12001 Technology Drive	*and*	**8200 Market Boulevard**
Eden Prairie, MN 55344-3695		**Chanhassen, MN 55317-9687**
USA		**USA**

to which this declaration relates, is in conformity with the provisions of the European Community Directives, including the latest amendments, as shown in the attached schedule

Assumption of conformity is based on the application of the harmonized standards and, where applicable or required, a European Community notified body certification, as shown in the attached schedule

(signature)

Approvals Manager
(function name - printed)

Larrell DeJong
(name - printed)

April 16, 2004
(date of issue)

ROSEMOUNT

CE

EC Declaration of Conformity
No: RMD 1017 Rev. L

EMC Directive (2004/108/EC)

All Models 3051 and 3001 Pressure Transmitters
EN 61326 1997 with Amendments A1, A2 and A3

PED Directive (97/23/EC)

Models 3051CA4; 3051CG2, 3, 4, 5; 3051CD2, 3, 4, 5 (also with P9 option)1
3051HD2, 3, 4, 5; 3051HG2, 3, 4, 5; 3051PD2, 3; and 3051PG2, 3, 4, 5 Pressure Transmitters
QS Certificate of Assessment - EC No. PED-H-100
Module H Conformity Assessment

All other model 3051/3001 Pressure Transmitters
Sound Engineering Practice

Transmitter Attachments: Diaphragm Seal - Process Flange - Manifold
Sound Engineering Practice

ATEX Directive (94/9/EC)

Model 3051/3001 Pressure Transmitter with 4-20mA/Hart Output

Certificate: BAS97ATEX1089X
Intrinsically Safe - Group II Category 1 G
Ex ia IIC T5 (Ta =-60°C to +40°C)
Ex ia IIC T4 (Ta =-60°C to +70°C)
Ex iD A20 T70°C (Tamb -20°C to 40°C)
Harmonized Standards Used
EN60079-0:2006, EN60079-11:2007
Other Standards Used
EN50281-1-1: 1998 + A1

Certificate: BAS00ATEX3105X
Type n and Dust - Group II Category 3 GD
Ex nA nL IIC T5(Ta =-40°C to +70°C)
Ex tD A22 T80°C (Tamb -20°C to 40°C)
Harmonized Standards Used
EN60079-0:2006, EN60079-15:2005
Other Standards Used
EN50281-1-1: 1998 + A1

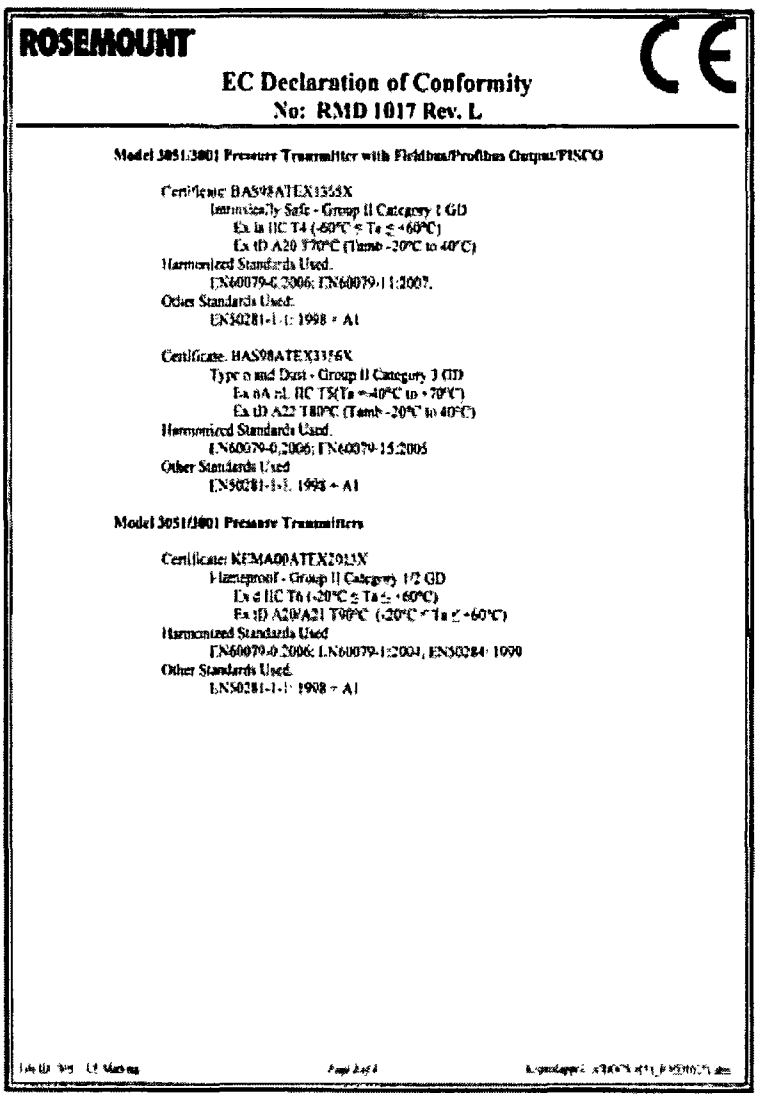

ROSEMOUNT

CE

EC Declaration of Conformity
No: RMD 1017 Rev. L

Model 3051/3001 Pressure Transmitter with Fieldbus/Profibus Output/PROFIBUS

Certificate: BAS98ATEX1355X
Intrinsically Safe - Group II Category 1 GD
Ex ia IIC T4 (-60°C ≤ Ta ≤ +60°C)
Ex tD A20 T70°C (Tamb -20°C to 40°C)
Harmonized Standards Used:
EN60079-0:2006; EN60079-11:2007.
Other Standards Used:
EN50281-1-1: 1998 + A1

Certificate: BAS98ATEX3356X
Type n and Dust - Group II Category 3 GD
Ex nA nL IIC T5(Ta =-40°C to +70°C)
Ex tD A22 T80°C (Tamb -20°C to 40°C)
Harmonized Standards Used:
EN60079-0:2006; EN60079-15:2005
Other Standards Used
EN50281-1-1: 1998 + A1

Model 3051/3001 Pressure Transmitters

Certificate: KEMA00ATEX2013X
Flameproof - Group II Category 1/2 GD
Ex d IIC T6 (-20°C ≤ Ta ≤ +60°C)
Ex tD A20/A21 T90°C (-20°C < Ta ≤ +60°C)
Harmonized Standards Used
EN60079-0:2006; EN60079-1:2004; EN50284: 1999
Other Standards Used:
EN50281-1-1: 1998 + A1

ROSEMOUNT

CE

EC Declaration of Conformity
No: RMD 1017 Rev. L

PED Notified Body

Det Norske Veritas (DNV) [Notified Body Number: 0575]
Veritasveien 1, N-1322
Høvik, Norway

ATEX Notified Bodies for EC Type Examination Certificate

KEMA (KEMA) [Notified Body Number: 0344]
Utrechtseweg 310, 6812 AR Arnhem
P.O. Box 5185, 6802 ED Arnhem
The Netherlands
Postbank 6794683

Baseefa. [Notified Body Number: 1180]
Rockhead Business Park
Staden Lane
Buxton, Derbyshire
SK17 9RZ United Kingdom

ATEX Notified Body for Quality Assurance

Baseefa. [Notified Body Number: 1180]
Rockhead Business Park
Staden Lane
Buxton, Derbyshire
SK17 9RZ United Kingdom

NOTES

NOTES

FT400-Series

FLOW COMPUTER INSTRUCTIONS

- FT415
- FT420

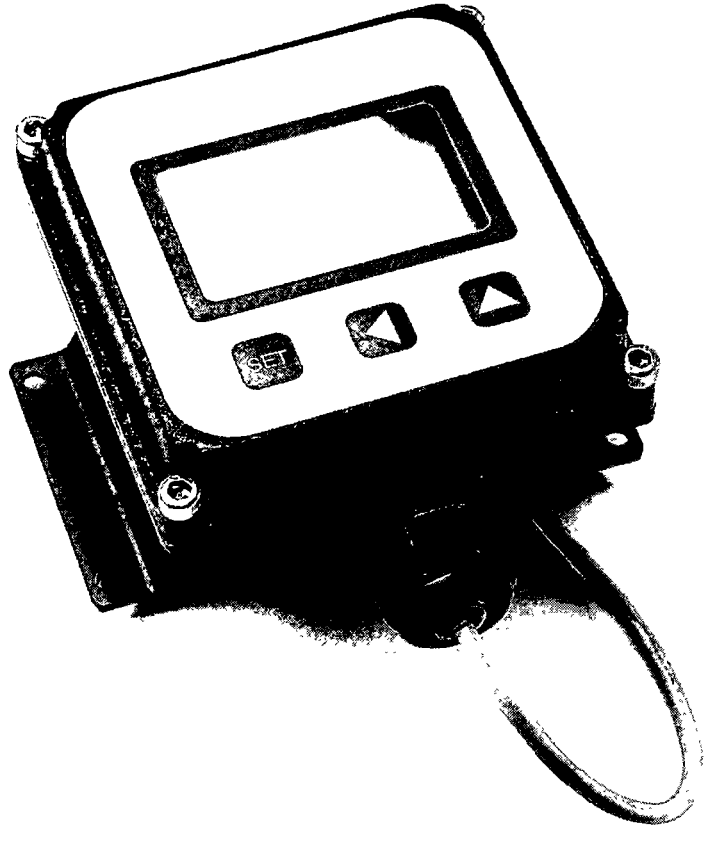

FT400-SERIES FLOW COMPUTER INSTRUCTIONS

ISO 9001:2000 CERTIFIED

SeaMetrics

The Leader in Flow Meter Value

TABLE OF CONTENTS

General Information
General Information, Features, Specifications ..... **Page 1**

Installation
Wall Mount, Meter Mount, Panel Mount ..... **Page 2**
Connections, FT420 Option 98, -98 Relay Board Specifications ..... **Page 3**

Connection Diagrams
FT415, FT420, FT420-65 ..... **Page 4**
FT420-98, FT420/EX Magmeter ..... **Page 5**
FT420/EX Magmeter/Dual Power Supply (-27 Option) ..... **Page 6**

(Quick) Settings
Quick Settings Overview ..... **Page 7**

Settings
K-Factor, Reading in Other Units ..... **Page 8**
Set K, Set P/Flow Alarm, Set 20 mA, Set Decimal Point, Set Time Unit ..... **Page 8**

Operation
Resettable Totalizer; 4-20 mA Output, Pulse Output, FT415 Battery Change ..... **Page 9**

Troubleshooting
Problems, Probable Causes, to Try ..... **Back Page**

TABLES AND DIAGRAMS

Features, Specifications ..... **Page 1**

Meter Mount, Panel Mount ..... **Page 2**

Dual Relay Board (Option -98) Specifications ..... **Page 3**

Connections: FT415, FT420, FT420-65 ..... **Page 4**

Connections: FT420-98, FT420/EX Magmeter ..... **Page 5**

Connections: FT420/EX Magmeter/Dual Power Supply ..... **Page 6**

Quick Settings Overview ..... **Page 7**

K-Factor ..... **Page 8**

Resettable Totalizer ..... **Page 9**

Troubleshooting Problems, Probable Causes, to Try ..... **Back Page**

GENERAL INFORMATION

The FT400-Series flow computers are microcontroller-based indicator/transmitters that display flow rate and total and provide output signals. The FT415 is battery-powered and provides a scalable pulse output. The FT420 is powered by external DC voltage and has both pulse and 4-20 mA analog outputs. The FT420 is a "two-wire" or "loop-powered" device, meaning that the 4-20 mA output signal doubles as its power supply.

The addition of a dual-relay output board FT420 only allows for certain applications requiring contact output isolation (e.g., certain metering pumps and water treatment controls). Dual solid state relays provide exactly the same pulse output as the standard unit, and each can signal one external device. A non-resettable total is also available. The FT420 can be ordered in a plastic enclosure with a 115 Vac power supply for use with mechanical meters, or with a built-in 115 Vac/12-24 Vdc dual power supply for magmeters.

Both the FT415 and the FT420 can be factory-mounted on the meter (-M) or remotely wall mounted with the brackets provided (-W). The FT420 is also available as a panel mount (-P) with an open back for easy installation in the user's own electrical enclosure. Most FT400's can be converted from wall-to-meter or meter-to-wall mount configurations after installation if needed.

Housings for the -W and -M models are rugged cast aluminum, potted and gasketed for maximum environmental protection. A membrane keypad allows settings to be changed without removing the cover. (Password protection, a standard feature, can be used to prevent settings from being changed.)

FEATURES

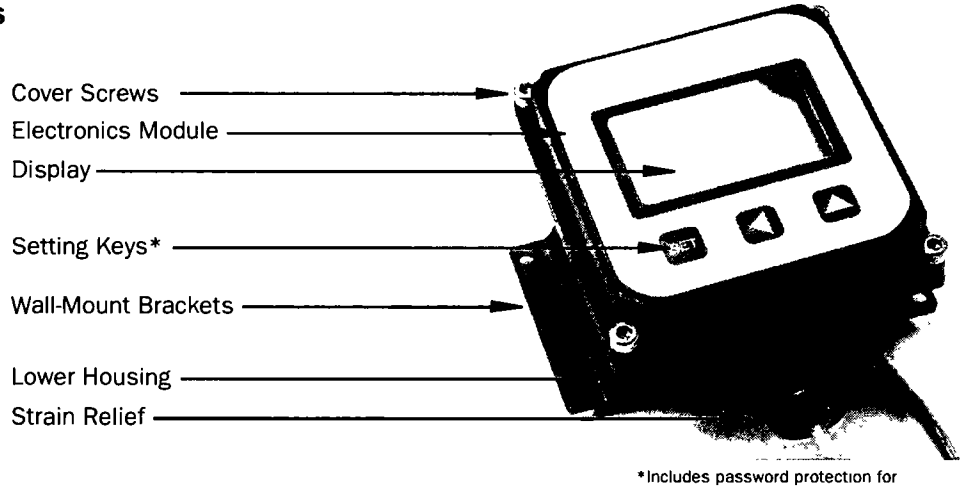

*Includes password protection for tamper prevention when needed

SPECIFICATIONS*		FT415	FT420
Power		Lithium "C", 3.6 Vdc, replaceable, 3-5 year life	12-30 Vdc, 4mA (4-20 mA when loop-powered)
Display	**Rate**	6-digit autorange, 1/2" character height	6-digit autorange, 1/2" character height
	Total	8-digit, 5/16" character height	8-digit, 5/16" character height
Outputs	**Current Sinking**	Scaled Pulse output (0.1 sec duration 6.1 Hz max) or High Alarm output or Low Alarm output	
		Sensor pass-through Pulse output (unscaled)	
	Analog	None	4-20 mA loop; 24-30 Vdc
Pulse Output Range		0.1 - 9999999.9 units/pulse	0.1 - 9999999.9 units/pulse
Input		Micropower GMR Sensor (square wave)	5V pulse or contact closure
Input Range		1.0 - 150 pulses/second	1.0 - 1,500 pulses/second
K-Factor Range		.001 - 99999.999	.001 - 99999.999
Flow Alarm Output Range		.01 - 999999.99	.01 - 999999.99
Operating Temperature		-30° to 65° C (-22° to 148° F)	-30° to 65° C (-22° to 148° F)
Environmental		NEMA 4X, IP66	NEMA 4X, IP66
EMC		CE EN 61000	CE EN 61000

**Specifications subject to change • Please consult our website for current data (www.seametrics.com).*

Wall Mount. To mount an FT400-Series indicator to the wall, hold the unit in the desired position, mark the holes in the mounting feet, drill and mount with screws. With the FT420W-65 option, first remove the front cover to gain access to the mounting screw holes.

A meter-mounted FT400-Series can be converted to a wall mount using an MK20 mounting kit.

Meter Mount. If the FT400-Series indicator was ordered as an -M model, the housing is already directly mounted to the flow sensor and needs no further installation.

An FT400-Series module can be converted from a wall-to a meter-mount using the MK10 adapter kit that includes a lower housing and associated hardware as follows:

1) Remove the strain relief through which the flow sensor cable runs.
2) Cut the cable to about 6" in length. Carefully strip the cable jacket to expose the three colored wires (red, white, and black) inside.
3) Route the wires through the threaded connector pre-installed in the bottom of the housing.
4) Start the threaded connector into the female thread on the top of the flow sensor. Be sure to match the oblong shape on the bottom of the housing to the depression on the top of the flow sensor.
5) Using an ordinary screwdriver inserted in one side of the slot (see drawing), tighten the screw as much as possible.
6) Strip the wire ends, make the connections to the FT400-Series indicator as shown in Connections Diagrams, and then use the cover screws to attach the indicator to the top of the housing.

Panel Mount (FT420 Only). Using the "Panel Cutout" drawing as a guide, cut a square hole in the panel. Remove the clamps from the back of the FT420P and insert the indicator unit through the cutout, taking care that the panel sealing gasket is in place between the front of the panel and the flange of the indicator. Hold the indicator in place while starting the screw of one of the two clamps. Finger tighten the screw, then install the other clamp. When both are in place, firmly tighten the clamps with a small wrench or nut driver.

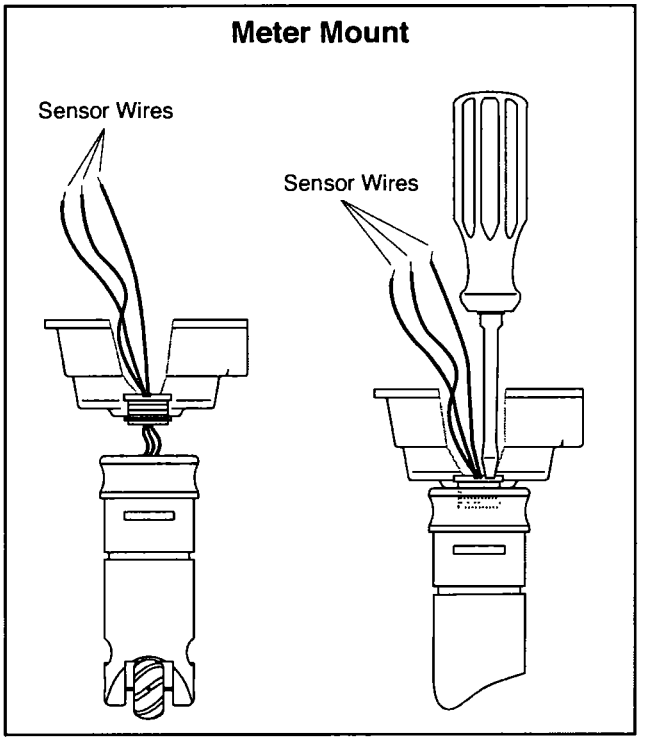

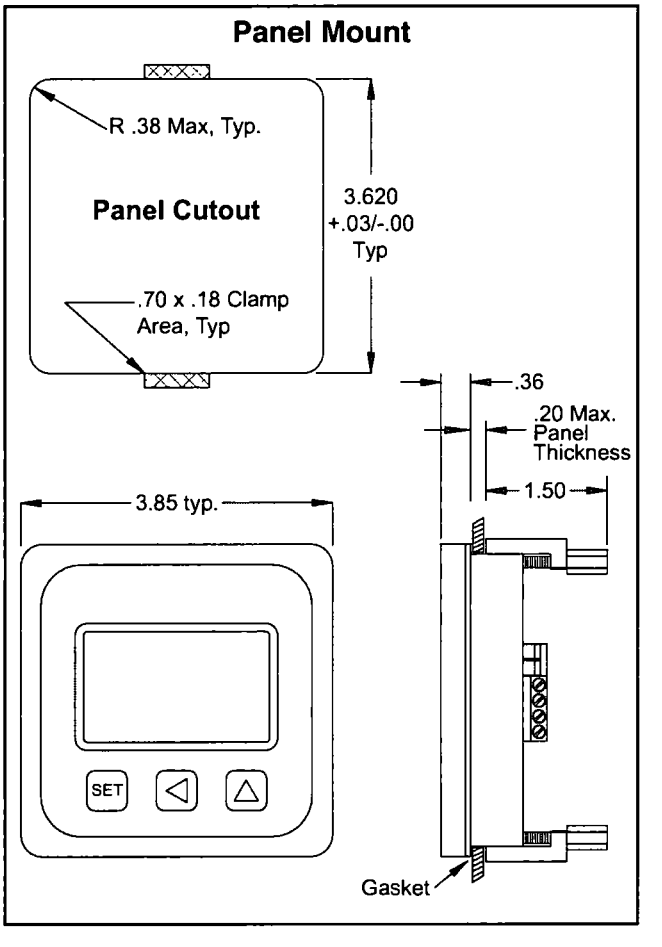

Connections. To connect the FT400-Series flow computer to a flow sensor or an external device such as a chemical metering pump, follow the Standard Connections diagrams on pages 4-6.

If the FT420's 4-20 mA current signal is not required, connect the power terminals to any 12-30 Vdc voltage source.

Dual Relay Output (Option -98). If you purchase the FT420 with option 98, the required component will come preinstalled, and no extra procedures are required.

If you are retrofitting an existing installation of an FT420 with the dual relay board, please follow the instructions below:

1) Peel the backing off of the double-stick tape and affix it to the bottom of the relay board (part #30221).
2) Carefully attach the board to the FT420 as shown in the FT420-98 Connection diagram on page 5. Be sure that the red wire faces the "Sensor Input" side of the FT420, and that the white wire faces the "Pulse Output" side.
3) Connect the white wire to the "Pulse Scaled" positive terminal, and the red wire to the "Power 4-20 mA" positive terminal.
4) Connect devices to the relays as desired.

-98 Relay Board Specifications

Output Voltage	0-130 VAC/DC	
Output Current (each output)		
Input Voltage	50° C	85° C
Current Limit	100 mA	50 mA
Max Pulses/Second		5
Contact Time Per Output		100 ms

Caution: If output is being used to control an external device, such as a metering pump, do not connect the device until programming is completed. If malfunction or incorrect programming of the output could cause personal injury or property damage, separate safeguards must be installed to prevent such injury or damage.

CONNECTION DIAGRAMS

FT415 Standard Connections

Caution: Do not apply external power to the FT415.

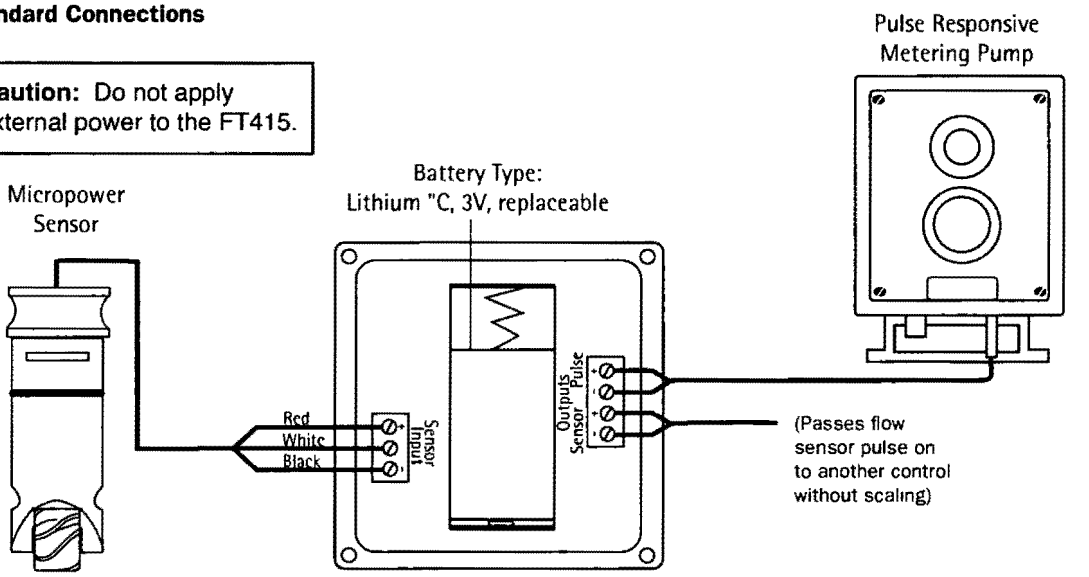

Connections for FT420/3-Wire Mechanical Meter

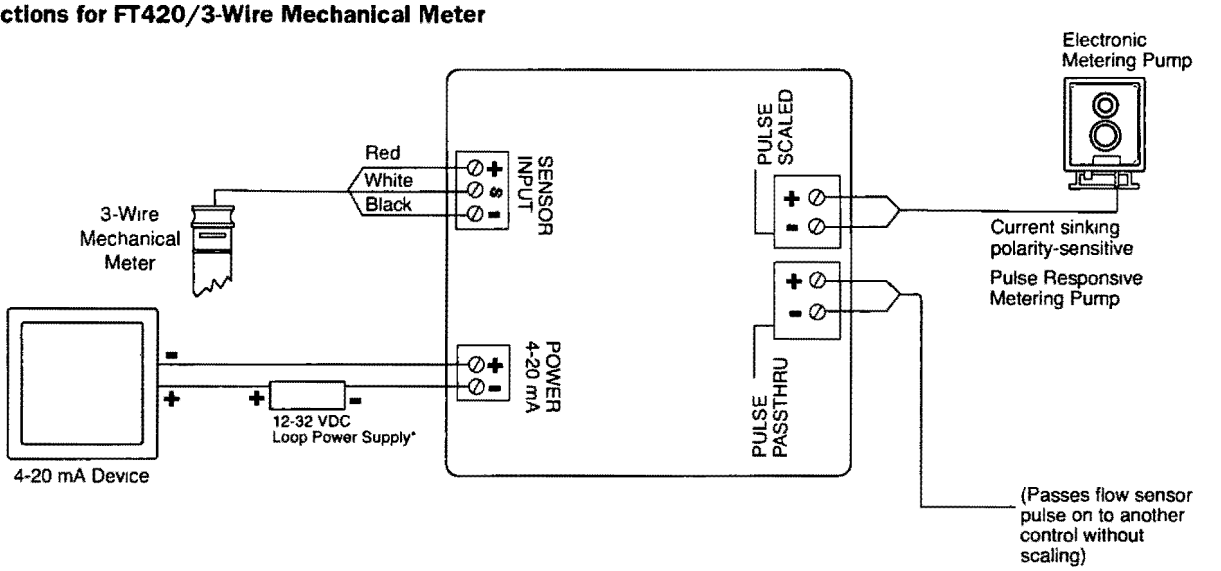

Connections for FT420-65 (115 Vac Option)

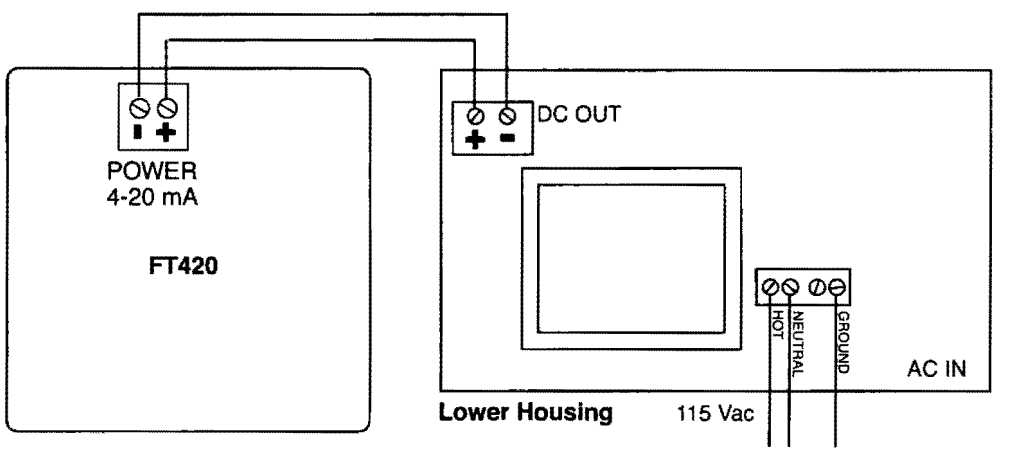

Connections for FT420-98 (Dual Relay Output Option)

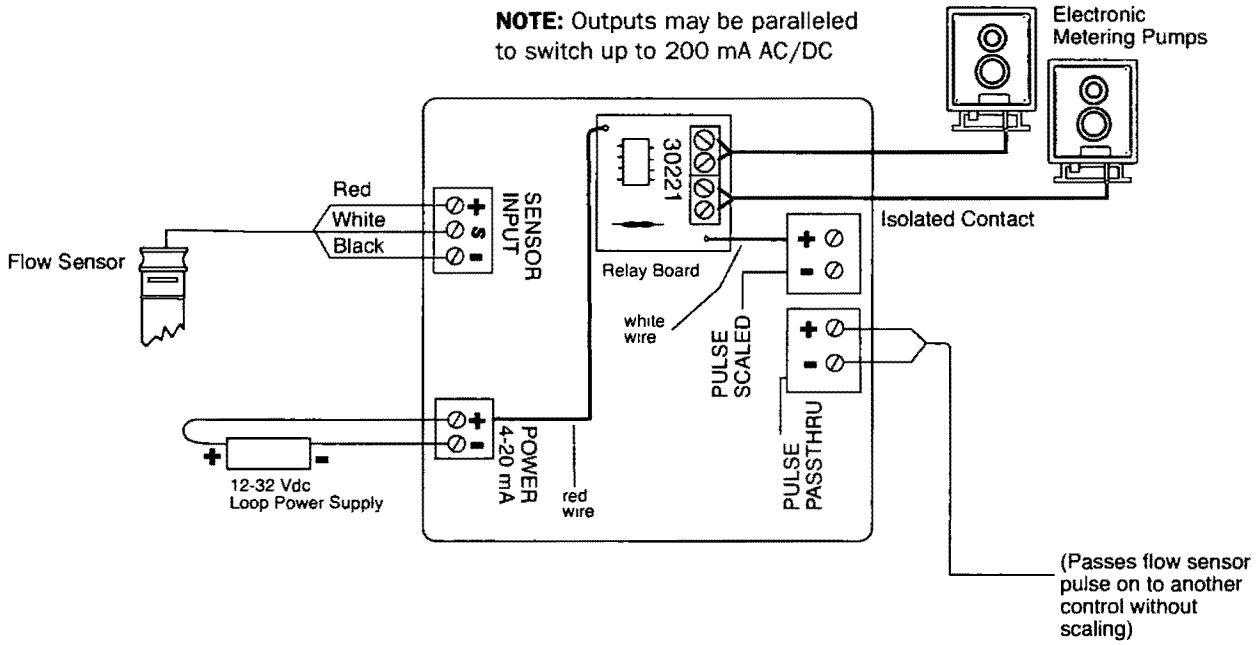

Connections for FT420/EX Magmeter

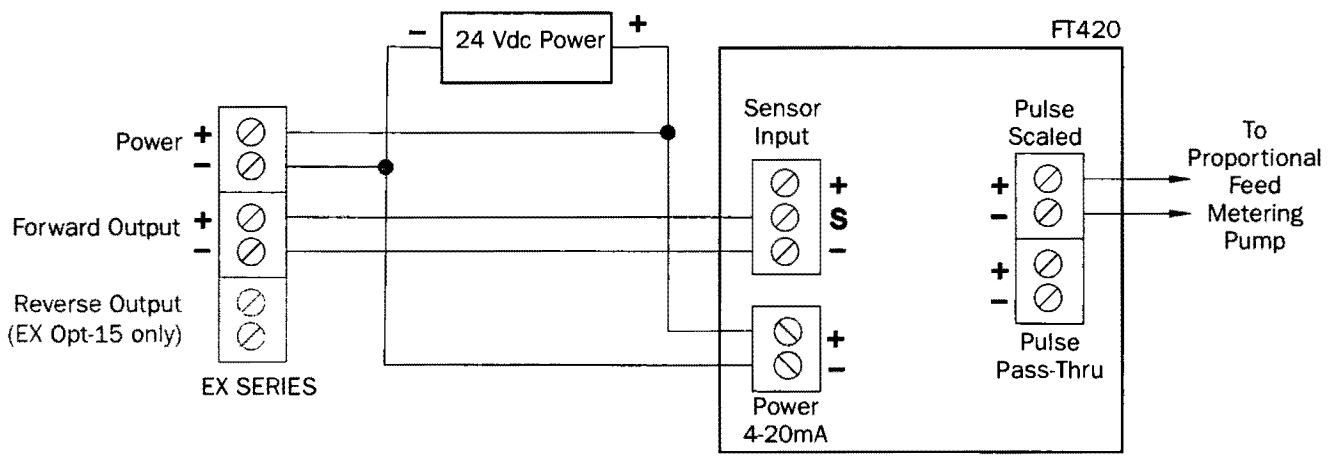

CONNECTION DIAGRAMS

FT420 Display with 4-20 mA Output

When running the FT420 with a magmeter (which requires power), the FT420 must be connected to two power supplies, one for the magmeter and one for the 4-20 mA loop. You may either use a dual power supply (available from SeaMetrics as the PC42), or two single power supplies (one of which may be the 4-20 mA loop itself). See diagrams below.

Caution: Important! Do not connect power to the power supply until all connections have been made and confirmed correct, and the cover has been put back into place.

FT420/4-20 mA Output with Two Separate Power Supplies

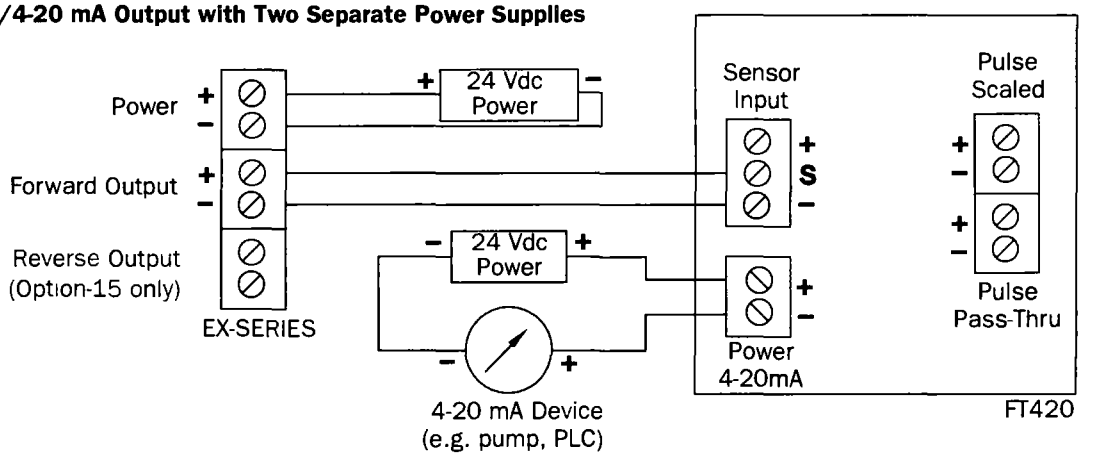

FT420/4-20 mA Output with PC42 Dual Power Supplies

Caution: It is essential for safety and proper operation to use a ground connection for the 115 Vac power. Do not use this power supply without proper grounding.

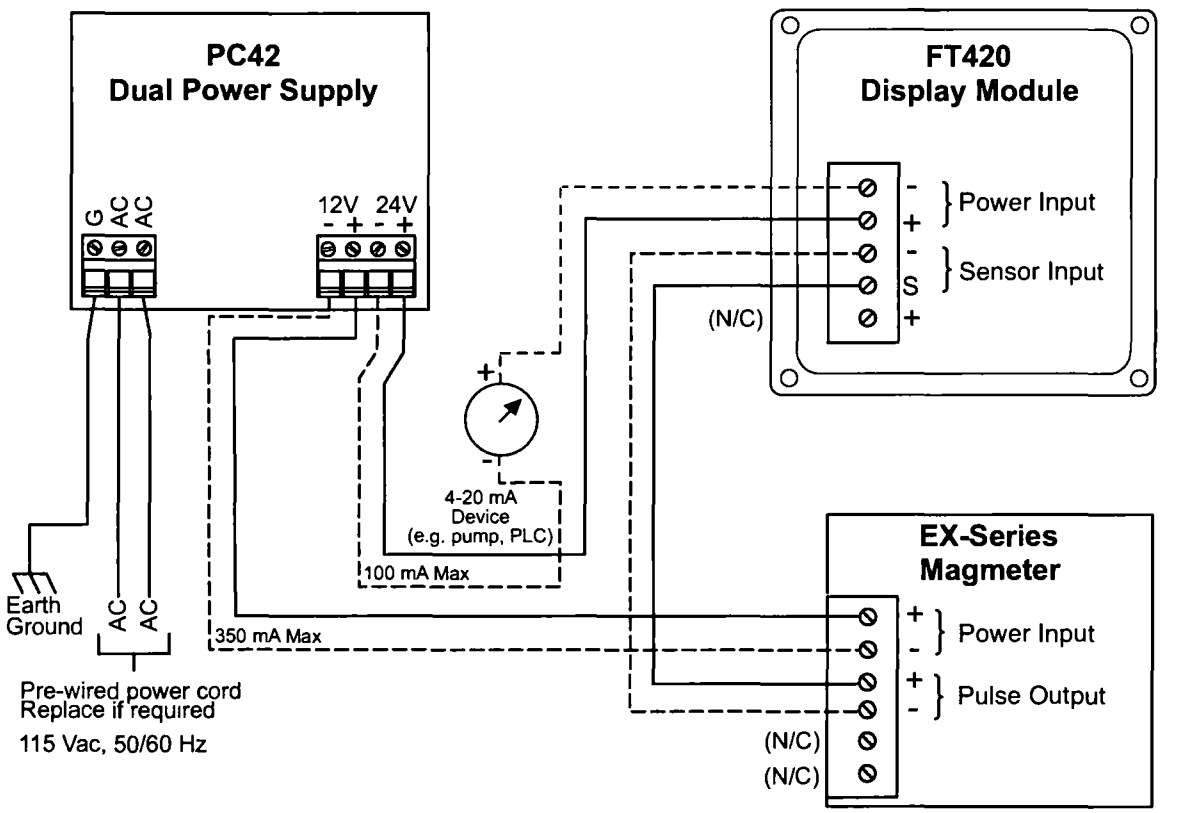

QUICK SETTINGS OVERVIEW

See following page for step-by-step instructions on changing these settings

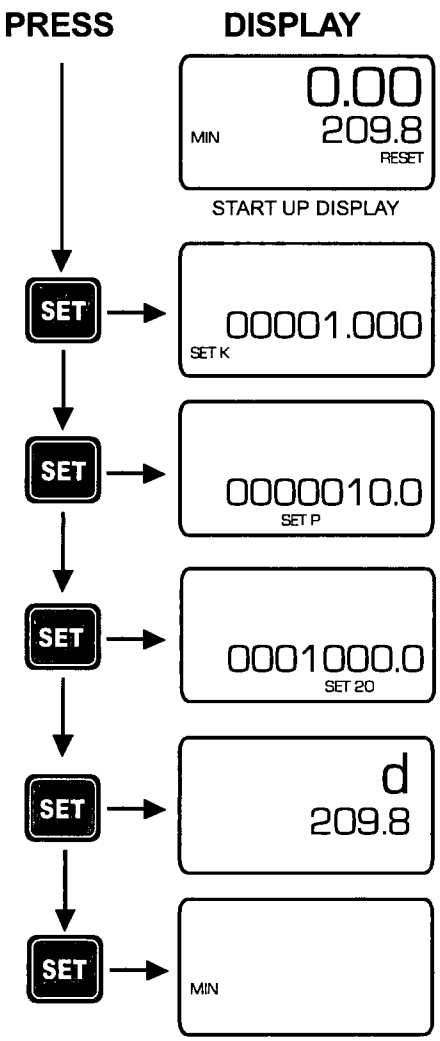

Large digits display instantaneous flow rate (GPM). Small digits display total flow (since last reset).

K is the number of pulses the flow sensor provides for every gallon of flow. Find it on the fitting (80-Series) or chart (100/200-Series) or on the SeaMetrics website.

P is the number of gallons per pulse desired on the scalable pulse output. (Example: P=1 is one pulse per gallon.) Skip without changing if you are not using the pulse output.

20 is the 20 mA maximum analog output. Set the flow rate you want to match maximum output. Example: 250 gpm maximum expected flow, "set 20" to 250. The analog output will scale to 4 mA at zero flow, 20 mA at 250 gpm*. **This setting appears on the FT420 ONLY.**

d is the decimal point. It toggles back and forth with the ▲. Set as many decimal places as needed. For higher flows, no decimal allows maximum number of whole digits.

MIN is the time base, for example, gallons *per minute*. Use the ▲ to select sec/min/hour/day.

***NOTE:** Use the up arrow key to reach your desired digit. Then press the left arrow key to move to the next digit. Repeat the process until the entire number is entered.

K-FACTOR

At a minimum, every FT400-Series flow computer must be programmed with the "K-factor". (This is the number of pulses that the meter produces per gallon of flow.) If you wish the FT400 to read in units other than gallons, see below.

The K-factor on any SeaMetrics flow sensor fitting or in-line meter can be found on the model-serial label. The line reading K = xxxx gives the desired number. For depth-adjustable sensors (101,201,115,215 models), look in the instruction manual under your pipe size. For EX meters, use the calculator on our website.

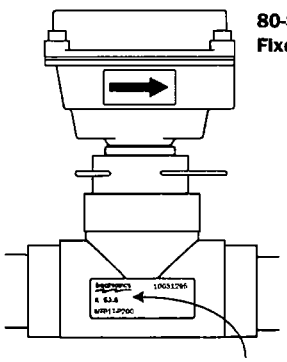

80-Series Fixed Depth Meter

Find Your K-Factor Here

READING IN OTHER UNITS

Changing Volume Units. The default K-factor units are pulses per gallon. To read your total in metric or other units instead, the standard K-factor must be converted to the desired volume units. For example, to read in pulses per liter, the K-factor must be multiplied by the applicable number shown below.

NOTE: Both rate & total will read in whatever units you choose.

To Convert K to:	Multiply by:
Liters	.26418
Cubic Meters	264.18
Fluid Ounces	.0078
Cubic Feet	7.48

Changing Time Units: To read your rate in liters per second (for example), convert the K-factor volume units as shown above and change the time units to Seconds, using the Set Time Unit instructions at right.

Set K. Begin by pressing the SET key once. The prompt SET K should appear on the display. The digit to the far right will be blinking. Use the up arrow key to reach your desired value. Then press the left arrow key to move to the next digit. Repeat the process until the entire number is entered. (Note that the decimal is fixed at three places. If you only have two decimal places for your K-factor, enter a zero for the third digit.) Press SET to advance. (**Note:** If unable to set K-factor, the unit is "locked" to prevent tampering. Please contact your Distributor for assistance.)

Set P/Flow Alarm. FT420 only. At this screen you may select between pulse output (P) or flow alarm (A) functions. If the pulse output and flow alarm features are not being used, this step can be skipped. The P (pulse output) setting does not affect anything if it is not being used.

Set P is the default that appears on a new FT400-Series. On an FT400 that has been previously set up with flow alarm function, an A will appear on this screen. To move between P and A screens, firmly press all three keys for 5-10 seconds, then use the up arrow to scroll through the three options: P, AL HI (high flow alarm) and AL LO (low flow alarm).

Set P. From this screen, follow the same process as for Set K to enter the desired pulse rate. This is the number of gallons (or whatever units are programmed) between pulses. (**Note:** Using the pulse output function disables the high and low flow alarm functions.) (6.1 Hz max output)

Set Flow Alarm. From the A screen, use the up arrow key to choose either AL HI or AL LO and then press the SET key to set the alarm rate. Use the up arrow and left arrow as above to reach the desired digits. (**Note:** Using the flow alarm function disables the pulse output function.)

Set 20 mA (FT420 Only). Press the SET key to advance to SET 20, to set the flow rate, in volume units per time unit, at which 20 mA is desired. Use the up arrow key to reach your desired value. Then press the left arrow key to move to the next digit. Repeat the process until the entire number is entered. The processor will automatically scale the 4-20 mA loop accordingly, with 4 mA at zero flow.

Set Decimal Point. Press the SET key again for the D prompt. Pressing the up arrow key switches among no decimal place, one decimal place and two decimal places.

Set Time Unit. When the SET key is pressed again, a blinking time unit appears. Press the up arrow key to select SEC (seconds), MIN (minutes), HR (hours) or DAY (days) (for example, gal/min, or gal/hr).

To return to normal operation after entering settings, press SET again. When the unit is connected to an operating flow sensor, the rate (larger digits) and total (smaller digits) indicator numbers should appear in the display.

Resettable/Non-Resettable Totalizer. Unless the unit has been ordered with the non-reset option, a RESET prompt is visible in the lower right corner above the up arrow key, when the display is in use. Press the up arrow key at any time to reset the totalizer to zero. (**Note:** If you need to reset a unit that has been ordered with a non-resettable totalizer, contact your distributor.)

This key resets total to zero when in normal run mode.

CAUTION: Do not touch up Arrow button unless you intend to RESET Total to Zero. TOTAL IS NOT RECOVERABLE.

Operation of 4-20 mA Output (FT420 Only). If the 4-20 mA output is in use and is correctly connected, the signal should vary between 4 mA and 20 mA in proportion to the flow, with the top flow rate set by the user (see Settings, page 8). At no time should the signal drop below 4 mA. A reading between 0 and 4 mA indicates a fault of some type, typically in the loop power supply or the connections (see Troubleshooting, back page). In the rare instance that the 4-20 signal fluctuates excessively ("paints") it may need to be damped by additional averaging. Contact Seametrics for information on how to increase filtering.

Operation of the Pulse Output. If the pulse output is being used (either standard electronic or relay-type), it should pulse for 0.1 second every time the set number of gallons has been totalized. If a pulse-responsive metering pump is properly connected to this output, it should stroke periodically. If this does not occur, see Troubleshooting, back page.

FT415 Battery Change. The expected average life of the battery ranges between 3-5 years depending on the frequency of the input. The battery is easily pulled and replaced. When the battery is removed, all of the settings will be retained.

CAUTION: During a battery change, the totalizer will reset to a previous total, which represents the last auto-backup (auto backups occur at approximately 4 minute intervals). If it is necessary to save the exact current total at the time of the battery change, save before removing the battery as follows:

1) Simultaneously press the SET and up arrow keys
2) Press SET again
3) Again simultaneously press the SET and up arrow keys

TROUBLESHOOTING

Problem	Probable Cause	Try...
Display blank	No power to the unit	Check for minimum 12 Vdc at power terminals
	Short in sensor circuit	Disconnect sensor, see if display returns (zero flow rate)
	Battery dead or loose (FT415 only)	Wiggle battery, replace if over three years old
Display missing segments	Damaged display module	Contact distributor for return/replacement
Display reading meaningless characters	Unit's microcontroller crashed	Disconnect and reconnect power, if problem repeats, contact distributor for return/replacement
	Battery nearly dead	Replace battery if over three years old
Display reads normally, flow rate incorrect	Wrong K-factor or time base entered	Enter correct K-factor from meter, fitting, or manual
Display reads normally, incorrect pulse output	Wrong pulse output setting	Use "Set P" to correct pulse output setting
	Polarity reversed on pulse output terminals	Reverse leads
Display reads normally, but no (or incorrect) 4-20 mA output (FT420 only)	Wrong 20 mA setting	Use "Set 20" to correct target top flow rate
	Inadequate loop power supply voltage	Check voltage (For 4-20 mA applications, 24 Vdc recommended)
	Polarity incorrect in 4-20 mA loop circuit	Compare to Connections diagram
Display reads zero when there is flow	Flow sensor failed	Consult flow sensor manual for how to test
	Break in flow sensor circuit	Check for continuity with multimeter
	Flow sensor not battery-compatible	Check flow sensor model number for "micropower option"
Display reads flow rate when there is none	Long flow sensor wire, running parallel to power wires	Reroute wire or change to shielded wire
	Flow sensor malfunction	See flow sensor manual to check
	Flow "jitter" (oscillating slosh) reads as flow	Consult factory for "anti-jitter" setting

SeaMetrics

SeaMetrics Incorporated • 19026 72nd Avenue South • Kent, Washington 98032 • USA
(P) 253.872.0284 • (F) 253.872.0285 • 1.800.975.8153 • www.seametrics.com

LT-65200063-D
7/16/09

SPEC SERVICES

SPECIFICATION FORMS FOR PROCESS MEASURMENT AND CONTROL INSTRUMENTS, PRIMARY ELEMENTS AND CONTROL VALVES

PROJECT: GROUNDWATER TREATMENT PLANT
CUSTOMER: W. A. RASIC CONSTRUCTION
CUSTOMER JOB NO.:
PLANT:
LOCATION:

LEVEL SWITCH LOW (FLYGT)

NO.	BY	DATE	REVISION
A	EIS	7/16/2008	FOR APPROVAL

SHEET 1 OF 1
SPEC NO. | REV.
CONTRACT | DATE
REQ. | P.O.
BY | CHK'D | APPR.

GENERAL	1	TAG NUMBER	LSL-211		
	2	SERVICE	LEVEL SWITCH		
	3	LINE NO./VESSEL NO	TNK-210		
	4	P & ID Number	I-5		
BODY	5	Type	FLOAT		
	6	Material. Body	POLYPROPYLENE		
	7	Material Sleeve			
	8	Connection size & Type			
	9	Electrode Diameter			
	10	Length			
	11	Body Rating			
	12				
	13				
	14				
	15	Manufacturer	FLYGT		
	16	Model Number	ENM-10		
	17				
RELAY	18	Type			
	19	Enclosure			
	20	Output Contact Rating			
	21	Powered Output Contact			
	22	Primary Voltage			
	23	Secondary Voltage			
	24	Temperature Range			
	25	Approvals			
	22				
	23				
	24				
	25	Manufacturer			
	26	Model Number			
	27				
SERVICE	28	Vessel	TNK-210		
	29	Fluid	ANTI-SCALANT		
	30				
	31	Sp Gr			
	32	Press.: Max / Normal			
	33	Temp.: Max. / Normal			
	34				
	35				
	36				
	37				
OPTIONS	38	Accessories			
	39				
	40				
	41				
	42				
	43				
	44				
	45	MANUFACTURER			
	46	PART NUMBER			
	47				
	48				

NOTES:

** VENDOR TO CONFIRM MODEL NUMBER.

1. VENDOR TO PROVIDE STAINLESS STEEL TAG PERMANENTLY ATTACHED STAMPED WITH TAG NUMBER AND SERVICE.

BLANK PAGE

FLYGT

Technical specification

ENM-10 Level regulator

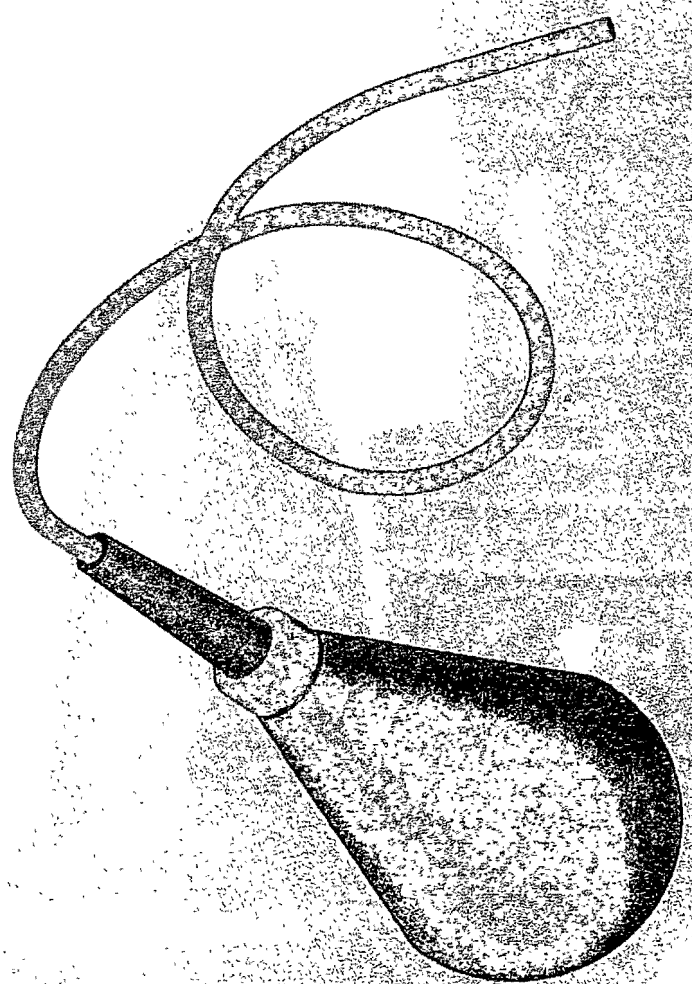

Flygt

PRODUCT DESCRIPTION

The simplest possible method for level control! A mechanical switch in a plastic casing, freely suspended at the desired height from its own cable. When the liquid level reaches the regulator, the casing will tilt and the mechanical switch will close or break the circuit, thereby starting or stopping a pump or actuating an alarm device. No wear, no maintenance! In sewage pumping stations, for ground water and drainage pumping — in fact, for most level control applications — the ENM-10 is the ideal solution.

The regulator casing is made of polypropylene and the cable is sheathed with a special PVC compound. The plastic components are welded and screwed together. Adhesive is never used. Impurities and deposits will not adhere to the smooth casing.

This level regulator is available in different versions, depending upon the medium in which it is to be used. As standard, the regulator can be obtained with 6, 13, 20, 30 or 50 metres (20, 42, 65, 100 or 167 feet) of cable for liquids with specific density between 0.95 and 1.10 g/cm³; for other specific densities, the regulator is only available with 20 metres (65 ft) of cable. The regulator can withstand up to 60°C (140°F).

Dimensions

For density g/cm³	Regulator length mm (in)	Diameter mm (in)
0.65—0.80	194 (7 $^{10}/_{16}$)	100 (4)
0.80—0.95	177 (7)	100 (4)
0.95—1.10	162 (6 $^{3}/_{8}$)	100 (4)
1.05—1.20	142 (5 $^{9}/_{16}$)	100 (4)
1.20—1.30	133 (5 $^{1}/_{4}$)	100 (4)
1.30—1.40	130 (5 $^{2}/_{16}$)	100 (4)
1.40—1.50	126 (5)	100 (4)

Technical data

Liquid temperature:	min. 0°C (32°F) max. 60°C (140°F)
Liquid density:	min. 0.65 g/cm³ max. 1.5 g/cm³
Degree of protection:	IP68, 20 m (65 ft)
Interrupting capacity of micro switch:	AC, resistive load, 250V 10A AC, inductive load, 250V 3A cos φ = 0.5 DC, 30V 5A

Note that local regulations may limit the voltage.

Approvals:	CSA, SEMKO, NEMKO, CE Approved according to EN61058
Weight:	approx. 2 kg (4.5 lb) for a standard density regulator with 20 m cable.

Materials

Body:	polypropylene
Bending relief:	EPDM rubber
Cable:	special compound PVC or chlorinated polyethylene CPE rubber

Colour code

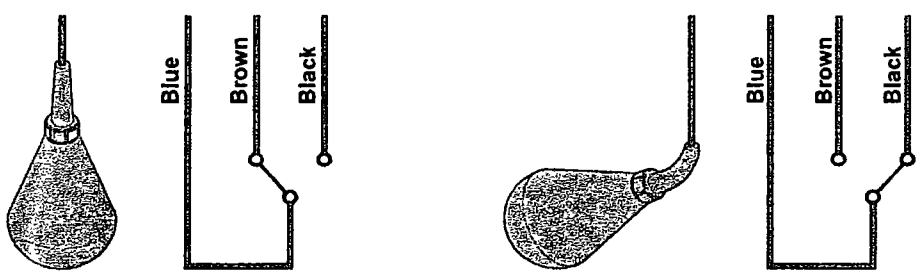

CHEMICAL RESISTANCE LIST

The liquid in which level regulation is practiced most frequently is, of course, water. Of the millions of regulators in use all over the world today, it is estimated that nine out of ten work in water.

However, with a float body of polypropylene, a cable of PVC or CPE and a bending relief of EPDM rubber, the ENM-10 is virtually insensitive to many aggressive liquids.

The table shows how resistant the ENM-10 equipped with either PVC or CPE cable, is to different chemicals at two different temperatures. The classification is broken down into the following categories:

0 = No effect, 1 = Minor to moderate and 2 = Severe effect. The sign — means that information is not available.

Keep in mind also that the density of the liquid determines the bouyancy of the regulator. The ENM-10 is made for seven different densities. See page 2.

Always observe local regulations:
Take particular note of:
- risk of fire/explosion
- hygiene requirements

Acids	PVC cable		CPE cable	
	20°C (68°F)	60°C (140°F)	20°C (68°F)	60°C (140°F)
Acetic Acid 50%	1	2	0	0
Acetic Acid 75%	2	2	0	0
Benzoic Acid	2	2	0	0
Boric Acid 5%	0	—	0	0
Butyric Acid	2	2	2	2
Chromic Acid 10%	0	2	2	2
Citric Acid	0	1	0	0
Hydrobromic Acid 5%	1	2	0	0
Hydrochloric Acid 10%	0	1	0	1
Hydrochloric Acid 37%	1	2	0	2
Hydrocyanic Acid 10%	0	0	1	2
Hydrofluoric Acid 5%	0	2	0	1
Hypochloric Acid	1	2	2	2
Maleic Acid	2	2	2	2
Nitric Acid 5%	1	1	1	1
Nitric Acid 65%	2	2	2	2
Oleic Acid	1	2	2	2
Oxalic Acid 50%	1	1	1	2
Phosphoric Acid 25%	0	0	1	2
Phosphoric Acid 85%	0	0	1	2
Sulphuric Acid 10%	1	2	1	2
Sulphuric Acid 78%	2	2	2	2
Tannic Acid	0	0	0	0
Tartaric Acid	1	1	1	1
Bases				
Ammonium Hydroxide	0	—	0	0
Calcium Hydroxide	0	0	0	0
Potassium Hydroxide	1	2	0	0
Sodium Hydroxide	1	2	0	0

Salts	PVC cable		CPE cable	
	20°C (68°F)	60°C (140°F)	20°C (68°F)	60°C (140°F)
Aluminium Chloride	0	0	0	0
Calcium Sulphate	0	0	0	0
Calcium Chloride	0	0	0	0
Calcium Nitrate	0	0	0	0
Copper Chloride	0	0	0	0
Copper Sulphate	0	0	0	0
Ferric Chloride	0	0	0	0
Ferrous Sulphate	0	0	0	0
Magnesium Chloride	0	0	0	0
Potassium Sulphate	0	0	0	0
Potassium Nitrate	0	0	0	0
Potassium Carbonate	1	1	1	1
Potassium Bicarbonate	0	0	0	0
Sodium Sulphate	0	0	0	0
Sodium Chloride	0	0	0	0
Sodium Nitrate	0	0	0	0
Sodium Bicarbonate	0	0	0	0
Sodium Carbonate	0	0	0	0
Tin Chloride	1	1	1	1
Zinc Sulphate	0	0	0	0
Zinc Chloride	0	0	0	0
Oils				
Castor Oil	1	1	1	1
Cocoanut Oil	0	—	0	2
Corn Oil	2	2	2	2
Diesel Oil	2	2	2	2
Linseed Oil	2	2	2	2
Mineral Oils	2	2	2	2
Olive Oil	1	1	1	1
Silicone Oils	0	0	0	0

Solvents and miscellaneous	PVC cable		CPE cable	
	20°C (68°F)	60°C (140°F)	20°C (68°F)	60°C (140°F)
Aceton	2	2	2	2
Aniline	2	2	1	2
Benzene	2	2	2	2
Butyl Alcohol	2	2	0	1
Carbon Tetrachloride	2	2	2	2
Chlorobenzene	2	2	2	2
Chloroform	2	2	2	2
Ethyl Alcohol	2	2	0	1
Ethyl Ether	2	2	2	2
Ethyl Acetate	2	2	2	2
Ethylene Dichloride	2	2	2	2
Ethylene Chloride	2	2	2	2
Formaldehyde 37%	1	2	0	0
Gasoline	2	2	2	2
Kerosene	2	2	2	2
Methyl Alcohol	2	2	0	0
Methyl Ethyl Ketone	2	2	2	2
Methylene Chloride	2	2	2	2
Nitrobenzene	2	2	2	2
Phenol	2	2	2	2
Toluene	2	2	2	2
Trichlorethylene	2	2	2	2
Turpentine	2	2	2	2
Xylene	2	2	2	2
Gases				
Carbon Dioxide	0	0	0	0
Carbon Monoxide	0	0	0	0
Chlorine (wet)	2	2	2	2
Hydrogen Sulphide	0	0	1	1
Sulphur Dioxide (wet)	1	1	2	2

0 = No effect, 1 = Minor to moderate, 2 = Severe effect. — = No information available.

Wiring alternative

To conform to local regulations, the level regulators are normally connected through a transformer to a low-tension control circuit. Two regu-lators are used — one for starting and one for stopping. A third regulator can be connected if an alarm is required at a given level. Identical regulators can be used for all functions.

A. Connected for emptying
Connect the blue and black leads.
Insulate the brown lead.

B. Connected for filling
Connect the blue and brown leads.
Insulate the black lead.

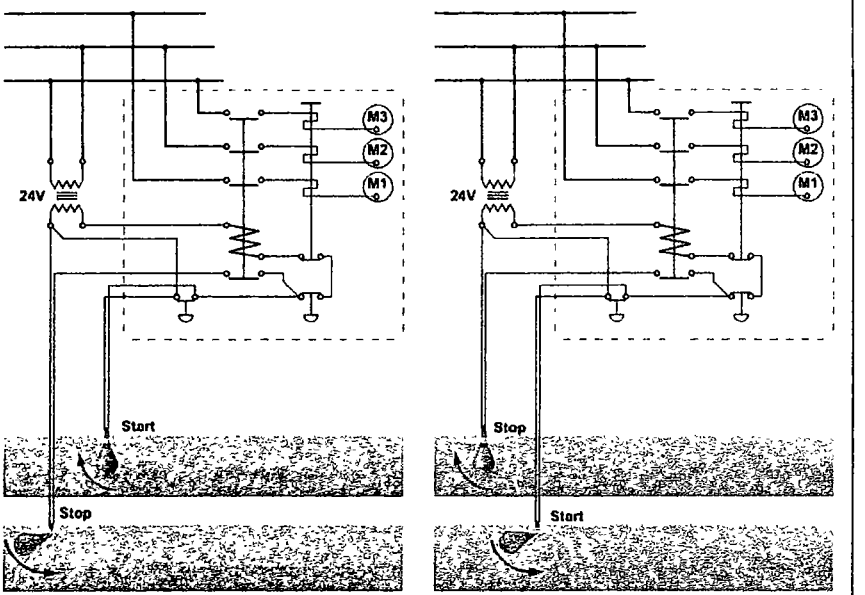

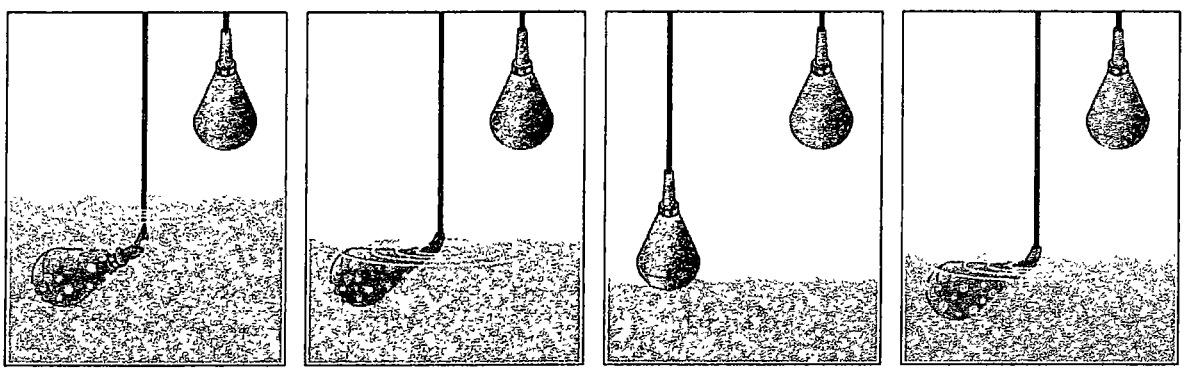

Let the level drop . . .

. . . to the lowest permissible point.

The regulator will then react . . .

. . . so the process is reversed.

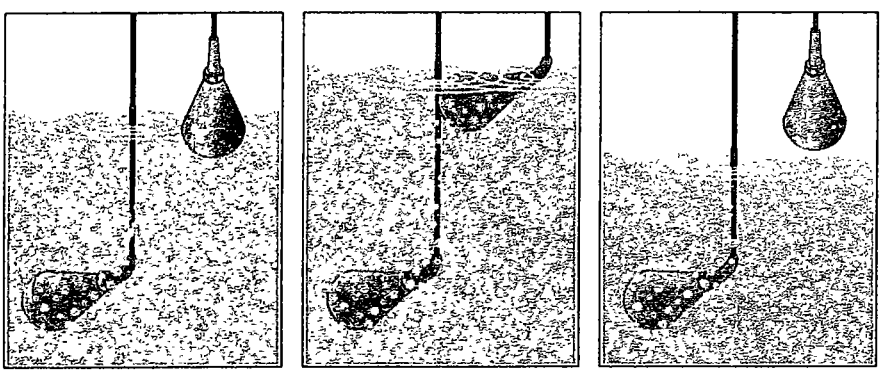

At the highest permissible point . . .

. . . level regulator II reacts . . .

. . . in the opposite fashion.

The manufacturers reserve the right to alter performance specification or design without notice.

FLYGT

891480
97 Eng 2M. 11.03 © ITT FLYGT AB

UL Instrumentation Cable

600V Tray Cables

Industrial Grade Sunlight- and Oil-Resistant Jackets

Description	Part No.	No. of Pairs	Color Code	Standard Lengths		Standard Unit Weight		Jacket Thickness		Nominal OD		Maximum Pull Tension		Minimum Bend Radius	
				Ft.	m	Lbs.	kg	Inch	mm	Inch	mm	Lbs.	N	Inch	mm
18 AWG Pairs Stranded (19x30) Tinned Copper Conductors • Twisted Pairs															
Unshielded • PVC/Nylon Insulation • Black PVC Jacket															
NEC TC, NPLF ICEA S-73-532 ICEA S-61-402 ICEA T-29-520 FT4/IEEE 1202/383	9486	1	E2	1000	304.8	43.0	19.5	.048	1.22	.275	6.99	50	222	2.75	69.85
Overall Beldfoil® Shield (100% Coverage) • PVC/Nylon Insulation • Black PVC Jacket															
NEC TC, NPLF ICEA S-73-532 ICEA S-61-402 ICEA T-29-520 FT4/IEEE 1202/383	9341	1	E2	500 1000	152.4 304.8	22.0 43.0	10.0 19.5	.048	1.22	.276	7.01	63	280	2.75	69.85
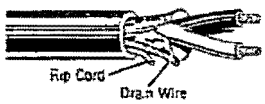															
18 AWG Pairs Stranded (7x26) Bare Copper Conductors • Twisted Pairs															
Overall Beldfoil Shield (100% Coverage) • PVC/Nylon Insulation • Black PVC Jacket (See chart below for other options)															
NEC TC, NPLF ICEA S-73-532 ICEA S-61-402 ICEA T-29-520 FT4/IEEE 1202/383	1120A	1	E2	10000†	3048.0	450.0	204.3	.048	1.22	.278	7.06	59	262	2.80	71.12
	3098A	1	E1	10000†	3048.0	510.0	231.3	.048	1.22	.278	7.06	67	298	2.80	71.12
	1063A	2	E1	10000†	3048.0	790.0	358.3	.053	1.35	.407	10.34	112	498	4.10	104.14
	1064A	4	E1	7500†	2286.0	892.5	404.8	.053	1.35	.470	11.94	202	899	4.70	119.38
	1065A	8	E1	7500†	2286.0	1650.0	748.4	.064	1.63	.598	15.21	361	1605	6.00	152.40
	1066A	12	E1	5000†	1524.0	1520.0	689.5	.064	1.63	.717	18.21	560	2491	7.20	182.88
	1067A	16	E1	5000†	1524.0	1905.0	864.1	.064	1.63	.793	20.14	739	3287	8.00	203.20
	1068A	24	E1	2500†	762.0	1487.5	674.7	.084	2.13	1.017	25.83	1098	4884	10.30	261.62
	1087A	36	E1	1250†	381.0	1035.0	469.9	.084	2.13	1.178	29.97	1635	7273	11.70	297.18
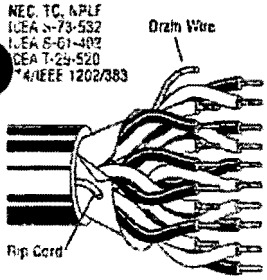	1088A	50	E1	Bulk††	Bulk	—	—	.084	2.13	1.446	36.73	2262	10062	14.50	368.30
Individually Shielded + Overall Beldfoil Shield (100% Coverage) • PVC/Nylon Insulation • Black PVC Jacket (Options below)															
NEC TC, NPLF ICEA S-73-532 ICEA S-61-402 ICEA T-29-520 FT4/IEEE 1202/383	1048A	2	E1	7500†	2286.0	522.5	282.4	.048	1.22	.381	9.68	140	623	3.80	96.52
	1049A	4	E1	7500†	2286.0	1057.5	479.7	.053	1.35	.489	12.42	258	1148	4.90	124.46
	1050A	8	E1	7500†	2286.0	1965.0	891.3	.064	1.63	.654	16.61	350	1557	6.60	167.64
	1051A	12	E1	5000†	1524.0	1915.0	868.6	.064	1.63	.785	19.94	728	3238	7.90	200.66
	1052A	16	E1	2500†	762.0	1267.5	574.9	.084	2.13	.898	22.81	963	4284	9.00	228.60
	1053A	24	E1	2500†	762.0	1907.5	865.2	.084	2.13	1.116	28.32	1434	6379	11.10	281.94
	1054A	36	E1	1250†	381.0	1270.0	576.1	.084	2.13	1.299	32.99	2139	9515	13.00	330.20
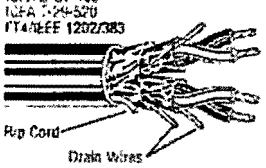	1038A	50	E1	Bulk††	Bulk	—	—	.084	2.13	1.527	38.79	2962	13176	15.30	388.62

E1, E2 - Refer to Technical Information section for color code. Alternate color coding available upon request.
Multiple pair or triad cables have each pair/triad numbered for ease of identification.

†Final put-up length may vary ±10% from length shown
††Bulk = Check length available for specific construction

To Specify:		
1234	A	E
Start with Part No.	Add or replace letters for options & delete	Add for Shielded & Overall Shield if desired

Conductor, Insulation and Jacket Options**

Base	Tinned	Insulation/Jacket
A	B	PVC-Nylon/PVC
C	D	XLPE/PVC
E	F	FRPO/PVC
G	H	XLPE/TPE
K	L	TPE/TPE
M	N	PVC-Nylon/Oil Res II
Q	R	XLPE/CPE
S	T	XLPE/Haloarrest™

**For 1000 and 3000 Series cables only

UL Instrumentation Cable

Thermocouple Extension Cables and Thermocouple Wire — Overview

Construction Thermocouple Extension Cable

Conductor material determined by the thermocouple extension wire type. FEP or PVC insulated with FEP or PVC jacket. Nylon rip cord included in all PVC-jacketed thermocouple extension cables. Communication wire included on all multi-pair, PVC constructions — 22 AWG (7x30) bare copper orange PVC insulation.

NOTE: The temperature ranges in Table A are applicable only to the thermocouple conductors and not to the cable. The cable must never be exposed to temperatures higher than the maximum temperature ratings shown in Table B.

Table B: Other Insulation/Jacket Options

UL Listed for PLTC	
Insulation/Jacket	Max. Temp Rating
XLPE/PVC	90°C
XLPE/CPE	90°C
PVC/PVC	105°C
PVC/CPE	105°C
PE/PVC	75°C
FPE/PVC	75°C
TPE/TPE	105°C
XLPE/Haloarrest®	90°C
FEP/FEP	200°C

Application

Unshielded

Parallel non-shielded extension wire may be utilized in low noise environments when recommended by the instrument manufacturer.

Overall Shield

Recommended, except in areas where high voltage and current sources create excessive noise interference. The Beldfoil® shield with drain wire provides 100% coverage for maximum shield effectiveness.

Individually Shielded

Individually shielded pairs are recommended for use in applications where optimum noise rejection is required.

PVC Insulated, PVC Jacketed Cable Specifications

- UL Subject 13
- UL 1685 (UL 1581) Vertical Tray Flame Test comparable to IEEE 383-1974 (70,000 BTU) Flame Test
- ANSI/MC 96.1–1982
- NEC CMG
- NEC Type PLTC Listed, which is approved for cable tray use in Class 1, Division 2, hazardous areas and non-hazardous areas, cable trays, raceways, conduit and supported by messenger wires.
- NEC Type ITC Listed, which is approved for cable tray use, raceways hazardous locations according to Articles 501, 502, 503 and 504; or as aerial on a cable messenger, and under raised floors in control rooms and rack rooms where arranged to prevent damage to the cable. Usages are allowed based on qualified persons servicing all installations.
- PVC/PVC constructions are CMG, FT4, IEEE 1202 and IEEE 383-2003 rated, and meet ICEA T-29-520 Flame Test.
- UL 1277 TC versions approved for use in Class 1 trays available as special.

Shielded Twisted Pair

(FEP insulated, FEP jacketed cable specifications)

- UL Subject 13
- NFPA 262 (UL 910 Steiner Tunnel Flame Test) comparable to FT6 Flame Test
- ANSI/MC 96.1–1982
- NEC Type CL3P/PLTC Listed, which is approved for use in ducts, plenums and other space used for environmental air.
- UL 1277 TC versions approved for use in Class 1 trays available as special.

Thermocouple Wire

Conductor material determined by the thermocouple type. FEP insulated and jacketed flat constructions.

FEP thermocouple wire is impervious to chemical attack and is flame retardant.

Table A: Thermocouple Identification and Limits of Error — Reference Junction 0°C*

ANSI Symbol	Temperature Range (°C) *(conductor only)*	Limits of Error Standard (°C)	Jacket Color	Insulation Color Code		Conductor Identification	
				Positive (+)	Negative (-)	Positive (+)	Negative (-)
E	0 to 340 340 to 540	±1.7°C ±.50%	Brown	Purple	Red	Chromel® Non-magnetic	Constantan Silver Color
J	0 to 293 293 to 480	±2.2°C ±.75%	Brown	White	Red	Iron Magnetic	Constantan Non-magnetic
K	0 to 293 293 to 980	±2.2°C ±.75%	Brown	Yellow	Red	Chromel Non-magnetic	Alumel® Magnetic
T	0 to 133 133 to 260	±1.0°C ±.75%	Brown	Blue	Red	Copper Copper Color	Constantan Non-magnetic
EX	0 to 200	±1.7°C	Purple	Purple	Red	Chromel	Constantan
JX	0 to 200	±2.2°C	Black	White	Red	Iron	Constantan
KX	0 to 200	±2.2°C	Yellow	Yellow	Red	Chromel	Alumel
TX	0 to 100	±1.0°C	Blue	Blue	Red	Copper	Constantan

Limits of error per ANSI MC96.1-1982. Limits shown do not include system or installation error. Percentages refer to the temperature being measured.

*The Temperature Range and Limits of Error are for standard grade thermocouples. Reference ANSI MC96.1-1982 for special grade thermocouples. The Temperature Ranges for type E, J, K and T thermocouple wires listed above pertain to 20 AWG wire.

Additional constructions available upon request.

Standard lengths may be subject to tolerance. Custom lengths may be available upon request. Contact the Belden Electronics Division Customer Service Department for additional information. 1-800-BELDEN-1

www.fciconnect.com

BURNDY PRODUCTS

CALL 1-800-346-4175
FOR YOUR LOCAL
SALES REPRESENTATIVE

EC&M Catalog

Experience. Technology. Answers.

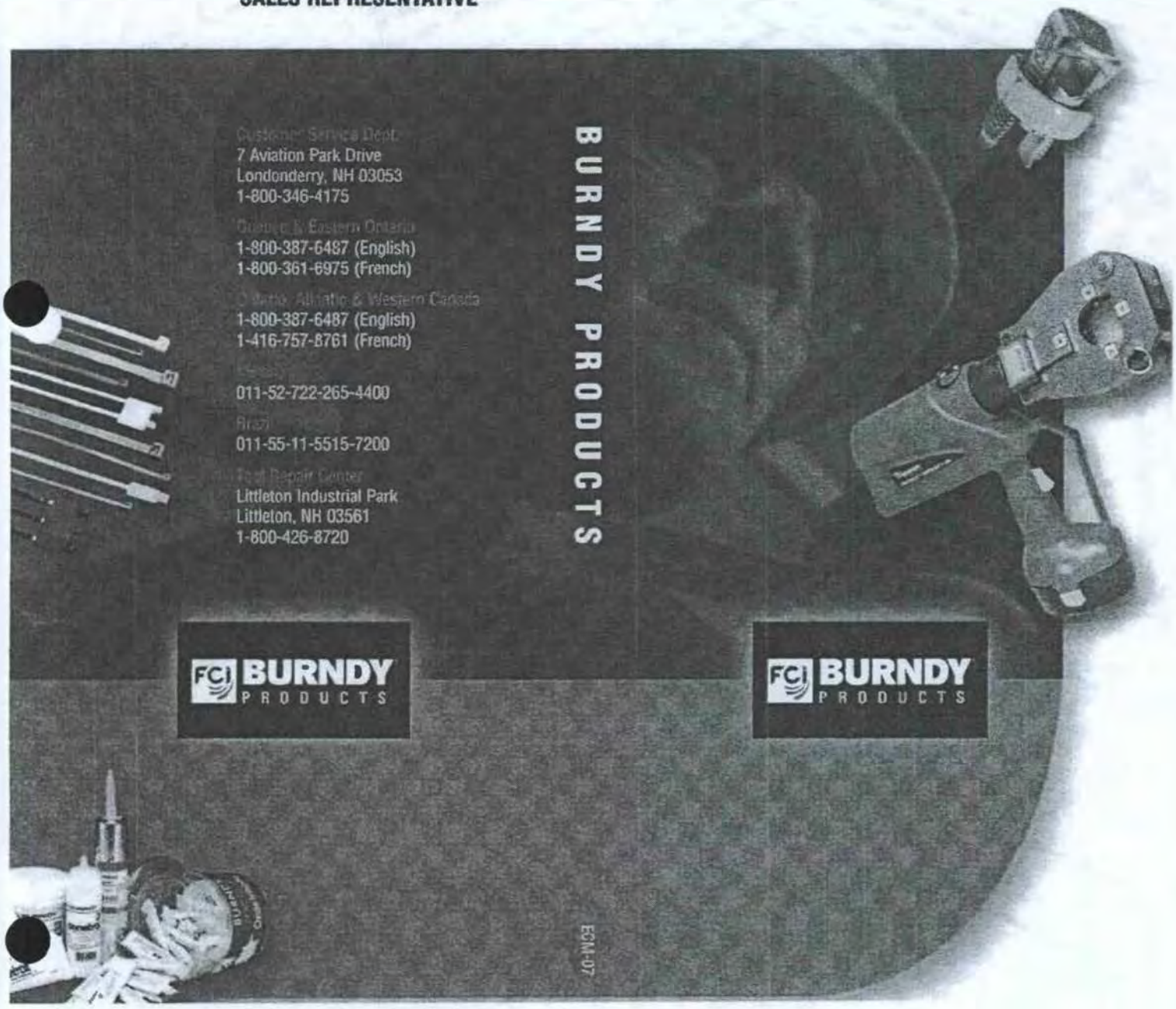

Customer Service Dept.
7 Aviation Park Drive
Londonderry, NH 03053
1-800-346-4175

Quebec & Eastern Ontario
1-800-387-6487 (English)
1-800-361-6975 (French)

Ontario, Atlantic & Western Canada
1-800-387-6487 (English)
1-416-757-8761 (French)

Mexico
011-52-722-265-4400

Brazil
011-55-11-5515-7200

Tool Repair Center
Littleton Industrial Park
Littleton, NH 03561
1-800-426-8720

BURNDY PRODUCTS

FCI BURNDY PRODUCTS

FCI BURNDY PRODUCTS

ECM-07

SERVIT® SPLIT BOLTS
Types KS & KS-3
For Copper, Copperweld

Compact, high strength, high copper alloy SERVIT® split-bolt has free-running threads and easy to grip wrench flats. Highly resistant to season cracking and corrosion, the SERVIT® provides maximum pressure and assures a secure connection on all combinations of run and tap conductors. Type KS-3 accommodates 3 maximum size conductors.

Catalog Number	Copper		▲ Recommended Tightening Torque in-lb
	Range For Equal Run And Tap	Min. Tap With Max. Run	
KS50	12 - 10 str.	16 str.	80
KS15**	10 - 8 str.	14 str.	
KS17**	8 str. - 6 sol.	14 str.	165
KS17-3*	8 str. - 6 sol.	18 str.	
KS20**	8 str. - 4 sol.	14 str.	
KS20-3*	8 str. - 4 sol.	14 str.	
KS22**	6 str. - 2 sol	14 str.	275
KS22-3*	6 str. - 2 sol.	14 str.	
KS23**	6 - 2 str.	14 str.	
KS25**	4 - 1/0 str.	14 str.	385
KS26**	2 - 2/0 str.	14 str.	
KS27**	1 - 3/0 str.	8 sol.	500
KS29**	1 str. - 250 kcmil	8 str.	650
KS31**	1/0 str. - 350 kcmil	1/0 str.	
KS34**	2/0 str. - 500 kcmil	2/0 str.	825
KS39	4/0 str. - 750 kcmil	4/0 str.	1000
KS44	300 - 1000 kcmil	4/0 str.	1100

*Not UL or CSA Listed.
**UL Rated for Direct Burial
▲ Listed torque values are for maximum conductor combinations accommodated. Consult UL 486 tables 7-4, 7-5, 7-6 for smaller conductor combinations.

UNIVERSAL SERVIT®
Type KSU

486A
Copper only

Tin plated service connector with spacer bar for all combinations of copper, aluminum, ACSR, 6201, 5005, and steel.

Catalog Number	Run Copper & Aluminum	Run ACSR AAAC, 5005	Tap Copper & Aluminum	Tap ACSR* AAAC, 5005	Recommended Tightening Torque in-lb
KSU17	12 - 6 sol.	8(6-1)	12 sol. - 6 sol.	8(6-1)	165
KSU20	10 - 4 sol.	6(6-1)	10 sol. - 4 sol.	6(6-1)	
KSU22	10 - 2 sol.	6(6-1) - 4(7-1)	10 sol. - 2 sol.	6(6-1) - 4(7-1)	275
KSU23	8 - 2 str.	3(6-1) - 2(6-1)	8 sol. - 2 str	6(6-1) - 2(6-1)	
KSU25	2 - 1/0 str.	3(6-1) - 1(6-1)	10 str. - 1/0 str.	6(6-1) - 1(6-1)	385
KSU26	2 - 2/0 str.	2(6-1) - 1/0(6-1)	8 str. - 2/0 str.	6(6-1) - 1/0(6-1)	
KSU27	1 - 3/0 str.	1(6-1) - 2/0(6-1)	8 sol. - 3/0 str.	6(6-1) - 2/0(6-1)	500
KSU29	1 str. - 250 kcmil	2/0(6-1) - 4/0(6-1)	8 str. - 250	6(6-1) - 4/0(6-1)	650
KSU31	4/0 str. - 350 kcmil	3/0(6-1) - 4/0(6-1)	4 str. - 350	4(6-1) - 4/0(6-1)	
KSU34	400 - 500 kcmil	336(30-7) - 477(18-1)	2 str. - 500	2(6-1) - 477(18-1)	825

* Accommodates compressed conductors within conductor ranges.

OKLIP™
Type KVS

Mechanical Connector for Copper and Copperweld. Compact, two-piece, high strength, high copper alloy BURNDY® OKLIP™ recommended for heavy duty connections. Neoprene rings hold DURIUM™ bolts in place during installation. Installed with ordinary wrench.

Catalog Number	Copper		Recommended Tightening Torque in-lb
	Run	Tap	
KVS26	2 - 2/0 str.	6 sol. - 2/0 str.	180
KVS28	1/0 - 4/0 str.	1/0 - 4/0 str.	250
KVS31	250 - 350 kcmil	1/0 str. - 350 kcmil	325
KVS34	400 - 500 kcmil	1/0 str. - 500 kcmil	375
KVS40	400 - 600 kcmil	3/0 str. - 600 kcmil	500
KVS44	500 - 1000 kcmil	3/0 str. - 1000 kcmil	

UNIVERSAL OKLIP™
Type KVSU

Mechanical Connector for all combinations of Copper, Aluminum, ACSR, AAAC 5005. Compact, high strength, tin plated copper alloy two-piece connector with er and tin-plated silicon bronze DURIUM™ hardware. Recommended for heavy onnections. Spacer separates dissimilar conductors and provides long contact length. Neoprene ring prevents loss of shorter bolt during installation. Longer peened bolt permits swivel action for easier installation.

Catalog Number	Run		Tap		Recommended Tightening Torque in-lb
	Copper & Aluminum	ACSR, AAAC, & 5005	Copper & Aluminum	ACSR, AAAC, & 5005	
KVSU26	2 - 2/0 str.	3 - 2/0	6 - 2/0 str.	6 - 2/0	180
KVSU28	1/0 - 4/0 str.	1/0 - 4/0	6 - 4/0 str.	6 - 4/0	250
KVSU31	250 - 350 kcmil	4/0 - 300	6 str. - 350 kcmil	6 - 300	325
KVSU34	400 - 500 kcmil	336.4-397.5	4 str. - 500 kcmil	5 - 397.5	375
KVSU40	400 - 600 kcmil	4/0 - 800	4/0 str. - 800 kcmil	3/0 - 715.5	500
KVSU44	500 -1000 kcmil	4/0 -1000	4/0 str. -1000 kcmil	4/0 - 900	

TRITAP™ SERVIT® TAP CONNECTOR
Type KSA

468B

An aluminum tin-plated universal tap connector for all combinations of aluminum to aluminum, aluminum to copper and copper to copper applications. UL486B Listed. 90° C rated.

Catalog Number	Run Min.	Run Max.	Tap Min.	Tap Max.	Recommended Tightening Torque in-lb
KSA6	10 sol.	6 str.	10 sol.	6 str.	165
KSA4	8 sol.	4 str.	10 sol.	4 str.	
KSA2	6 sol.	2 str.	8 str.	2 str.	275
KSA1/0	2 compact	1/0 str.	8 sol.	1/0 str.	385
KSA2/0	2 compact	2/0 str.	8 str.	2/0 str.	
KSA4/0	2 compact	4/0 str.	6 str.	4/0 str.	500
KSA350*	1/0 compact	350 kcmil	4 str.	350 kcmil	650
KSA500*	400 compact	500 kcmil	2 compact	500 kcmil	825

*Not CSA Listed

SERVIT® COVER
Type SC

Range-taking, insulating cover for SERVIT® and equivalent split-bolt connectors.

Catalog Number	For Use With
SC4	KS17, KS17-3, KS20, KSU17, KSU20
SC2	KS22, KS20-3, KS23, KS22-3, KSA6, KSA4, KSU22, KSU23
SC2/0	KS25, KS26, KSA2, KSA 1/0, KSU25, KSU26

VERSITAP™ PARALLEL CLAMP
Type QPX

Parallel clamp for wide range of copper cable. Makes parallel tap, tees, crosses and end-to-end connections. Rounded edges for easy taping.

Catalog Number	Cable Range				Recommended Tightening Torque in-lb
	Run Min.	Run Max.	Tap Min.	Tap Max.	
QPX2C2C	6 str.	2 str.	6 str.	2 str.	150
QPX262C	1 str.	4/0 str.	6 str.	2 str.	250
QPX2828	1 str.	4/0 str.	1 str.	4/0 str.	
QPX342C	250 kcmil	500 kcmil	6 str.	2 str.	375
QPX3428	250 kcmil	500 kcmil	1 str.	4/0 str.	
QPX3434	250 kcmil	500 kcmil	250 kcmil	500 kcmil	
QPX442C	500 kcmil	1000 kcmil	6 str.	2 str.	500
QPX4428	500 kcmil	1000 kcmil	1 str	4/0 str.	
QPX4434	500 kcmil	1000 kcmil	250 kcmil	500 kcmil	
QPX4444	500 kcmil	1000 kcmil	500 kcmil	1000 kcmil	

ONE HOLE HYLUG™ CODE CONDUCTOR LONG BARREL
ies YA, YA-TC

Uninsulated Copper Compression Terminal

UL Listed 90° C 600 Volts to 35 KV ◆

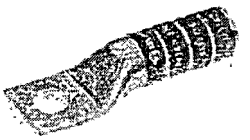

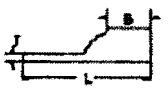

Catalog Number	Conductor AWG	mm2	Navy	Stud Hole Size	Tongue Width	Figure Dimensions (B)	(T)	(L)
YA8C-TC10	8 AWG 8 WELD 37/24 6 sol.	† 10	23	10	.38	.81	.08	1.57
YA8C-TC14	8 AWG 8 WELD 37/24 6 sol.			1/4	.41	.81	.06	1.69
YA8C	8 AWG	—	—	1/4	.41	1.12	.09	1.81
YA5C	5 AWG		30	1/4	.44	1.12	.07	1.98
YA4C	4 AWG		40	1/4	.50	1.12	.09	1.87
YA3C	3 AWG	25	50	5/16	.55	1.25	.09	2.30
YA3CN	.2 sol.	25	50	1/2	.81	1.25	.12	2.86
YA2C	2 AWG	35	60	5/16	.61	1.25	.11	2.29
YA1C	1 AWG	50	75	5/16	.58	1.38	.10	2.45
YA25	1/0 AWG	—	100	5/16	.75	1.38	.12	2.48
YA25N	1/0 AWG		100	1/2	.81	1.38	.11	3.05
YA26	2/0 AWG	70	125	3/8	.83	1.50	.12	2.77
YA26N	2/0 AWG	70	125	1/2	.83	1.50	.12	3.21
YA27	3/0 AWG	—	150	1/2	.91	1.50	.13	3.06
YA28	4/0 AWG		200	1/2	1.02	1.62	.14	3.23
YA29	250 kcmil		250	1/2	1.11	1.2	.16	3.26
YA30	300 kcmil	150	300	1/2	1.11	1.2	.16	3.26
YA31	350 kcmil	185	350	1/2	1.29	2.00	.18	3.73
YA32N	400 kcmil	—	400	1/2	1.20	2.00	.16	3.69
YA32	400 kcmil		400	5/8	1.38	2.12	.19	4.15
YA34N	500 kcmil	240	—	1/2	1.52	2.25	.23	4.32
YA34	500 kcmil	240		5/8	1.52	2.25	.23	4.39
YA36N	600 kcmil	300		1/2	1.69	2.69	.27	4.83
YA36	600 kcmil	300		5/8	1.68	2.69	.27	4.90
YA38N	750 kcmil	—		1/2	1.89	2.68	.27	5.11
YA39	750 kcmil			5/8	1.68	2.68	.27	5.17
YA44	1000 kcmil	500		5/8	2.17	3.00	.33	5.45

*** The MM2 conductor sizes listed are the recommendations for Class 2 conductor.
† The MM2 conductor size listed is for Class 2 and Class 5 conductor.
• Available undrilled. Add suffix "U" to catalog number (example YA25U).
◆ For applications greater than 2000 Volts consult cable manufacturer for voltage stress relief instructions.
Note: All dimensions shown are for reference only

45° and 90° lugs are available. For more information, please contact Customer Service.
1-800-346-4175

Catalog Number	Dieless (# of crimps)	▲ Installation Tooling: Mechanical	Hydraulic		Color Code	Die Index	
		MD6, OUR840, MD7-34R	Y500CTHS	Y35, Y38, Y750, Y46*, PAT750			
YA8C-TC10	MRC840 (2) YBJ6R-1 (1) Y1MRTC (2) YB1KFT (1) YB1KFTM6H (1) PAT81KFT-18V (1)	W8CVT (2) W8CRT (2) X8CRT (2)	X8CRT (2) W8CVT (2) W8CRT (2)	U8CRT (2)	RED	46	1"
YA8C-TC14							
YA6C	MRC840 (2) MY29-3 (2) MY29-11 (2) Y1MRTC (2) Y644HSXT (1) YB1KFT (1) YB1KFTM6H (1) PAT81KFT-18V (1)	W6CVT (2) W6CRT (2) X6CRT (2) X6CART (2)	W6CVT (2) W6CRT (2) X6CRT (2) X6CART (2)	U6CRT (2) U6CABT (2)	BLUE	7	1-3/16"
YA5C	Y1MRTC (2) MRC840 (2) MY29-3 (2) MY29-11 (2) Y644HSXT (1) YB1KFT (1) YB1KFTM6H (1) PAT81KFT-18V (1)	W5CVT (2) W5CRT (2) X5CRT (2)	W5CVT (2) W5CRT (2) X5CRT (2)	U5CRT (2)	BLUE	7	1-3/16"
YA4C	MRC840 (2) MY29-3 (2) MY29-11 (2) Y1MRTC (4) Y644HSXT (1) YB1KFT (1) YB1KFTM6H (1) PAT81KFT-18V (1)	W4CVT (2) W4CRT (2) X4CRT (2)	W4CVT (2) W4CRT (2) X4CRT (2)	U4CRT (2) U6CABT (2)	GRAY	8	1-3/16"
YA3C	MY29-3 (2) MY29-11 (2) Y644HSXT (1) YB1KFT (2) YB1KFTM6H (2) PAT81KFT-18V (2)	W3CRT (2)	W3CRT (2)	U3CRT (2)	WHITE	9	1-1/2"
YA3CN							
YA2C	MRC840 (2) MY29-3 (2) MY29-11 (2) Y1MRTC (4) Y644HSXT (1) YB1KFT (2) YB1KFTM6H (2) PAT81KFT-18V (2)	W2CVT (2) W2CRT (2) X2CRT (2)	W2CVT (2) W2CRT (2) X2CRT (2)	U2CRT (2)	BROWN	10	
YA1C	Y1MRTC (4) MRC840 (2) MY29-3 (2) MY29-11 (2) Y644HSXT (1) YB1KFT (2) YB1KFTM6H (2) PAT81KFT-18V (2)	W1CVT (2) W1CRT-1 (2) X1CRT-1 (2)	W1CVT (2) W1CRT-1 (2) X1CRH-1 (2)	U1CRT-1 (2) U4CABT (2)	GREEN	11	1-7/16"
YA25	MRC840 (4) MY29-3 (2) MY29-11 (2) Y644HSXT (1) YB1KFT (2) YB1KFTM6H (2) PAT81KFT-18V (2)	W25VT (4) W25RT (4) X25RT (4)	W25VT (4) W25RT (4) X25RT (4)	U25RT (2) U2CABT (2)	PINK	12	1-7/16"
YA25N	MRC840 (4) MY29-3 (2) MY29-11 (2) Y644HSXT (1) YB1KFT (2) YB1KFTM6H (2) PAT81KFT-18V (2)	W25VT(4) W25RT (4) X25RT (4)	W25VT(4) W25RT (4) X25RT (4)	U25RT (2) U2CABT (2)	PINK	12	1-7/16"
YA26	MRC840 (4) MY29-3 (2) MY29-11 (2) Y644HSXT (1) YB1KFT (2) YB1KFTM6H (2) PAT81KFT-18V (2)	W26VT (4) W26RT (4) X26RT (4)	W26VT (4) W26RT (4) X26RT (4)	U26RT (2)	BLACK	13	1-9/16"
YA26N							
YA27	MRC840 (4) MY29-3 (2) MY29-11 (2) Y644HSXT (1) YB1KFT (2) YB1KFTM6H (2) PAT81KFT-18V (2)	W27VT (4) W27RT (4) X27RT (4)	W27VT (4) W27RT (4) X27RT (4)	U27RT (2)	ORANGE	14	1-9/16"
YA28	MRC840 (4) MY29-3 (2) MY29-11 (2) Y644HSXT (1) YB1KFT (2) YB1KFTM6H (2) PAT81KFT-18V (2)	W28VT (4) W28RT (4) X28RT (4)	W28VT (4) W28RT (4) X28RT (4)	U28RT (2)	PURPLE	15	

45° and 90° lugs are available. For more information, please contact Customer Service.
1-800-346-4175

Type 4 JIC Lift-Off Cover Enclosures

Data Sheet

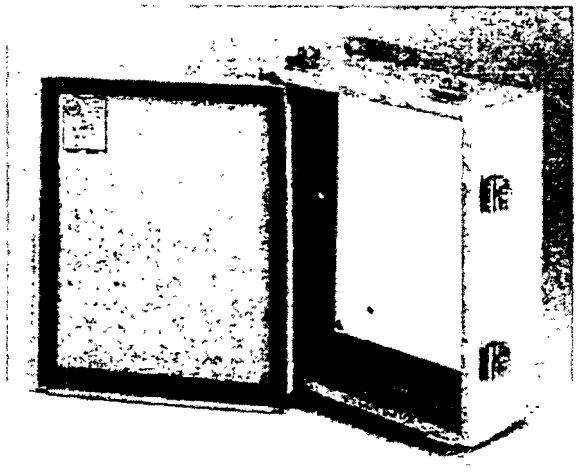

Application

- Houses electrical controls and instruments
- Intended for indoor or outdoor use
- Protects against windblown dust and rain, splashing water and hose directed water

Standards

- UL 508 listed, Type 4, Type 13 and Type 12
- CSA C22.2 No.94 certified, Type 4, Type 13 and Type 12
- Conforms to NEMA standard for Type 4, Type 13 and Type 12
- Conforms to JIC standard EGP-1-1967
- IEC 60529, IP66

Construction

- Enclosure and cover are fabricated from (16) gauge steel
- All continuous welded seams are finished smooth
- Cover is secured to the body with easy-to-operate stainless steel screw clamps mounted on all four sides
- Cover has a fixed, oil and water-resistant gasket
- Ground stud provided on cover
- #10-32 weldnuts are provided for mounting optional panel on 6H x 4W and larger enclosures
- External mounting feet are provided for secure wall mounting

Finish

- Wash and phosphate undercoat
- ANSI 61 gray polyester powder finish

Accessories

- Panels
- JIC terminal strap kit
- JIC terminal strip kit
- Terminal blocks
- Touch-up paint
- See Accessories section

Notes: B-Line Systems can provide special sizes, finishes and other modifications. Consult the factory for your special requirements.

Type 4 JIC Lift-Off Cover Enclosures

Catalog Number

Enclosure Catalog Number	Enclosure Size Height x Width x Depth A x B x C in.	mm	D in.	mm	E in.	mm	F in.	mm	Panel Catalog Number	Panel Size Height x Width in.	mm
443-4LC	4.00x4.00x3.00	102x102x76	2.00	51	-	-	2.00	51	-	-	-
643-4LC	6.00x4.00x3.00	152x102x76	3.00	76	-	-	2.00	51	AW64P	4.87x2.87	124x73
863.5-4LC	8.00x6.00x3.50	203x152x89	4.00	102	-	-	3.00	76	AW86P	6.87x4.87	174x124
664-4LC	6.00x6.00x4.00	152x152x102	3.00	76	-	-	3.00	76	AW66P	4.87x4.87	124x124
1084-4LC	10.00x8.00x4.00	254x203x102	2.00	51	-	-	4.00	102	AW108P	8.87x6.87	225x174
12105-4LC	12.00x10.00x5.00	305x254x127	3.00	76	-	-	2.00	51	AW1210P	10.87x8.87	276x225
14126-4LC	14.00x12.00x6.00	356x305x152	3.00	76	-	-	3.00	76	AW1412P	12.87x10.87	327x276
16146-4LC	16.00x14.00x6.00	406x356x152	2.00	51	8.00	203	3.00	76	AW1614P	14.87x12.87	378x327

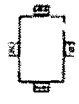

443-4LC
643-4LC
863.5-4LC
664-4LC

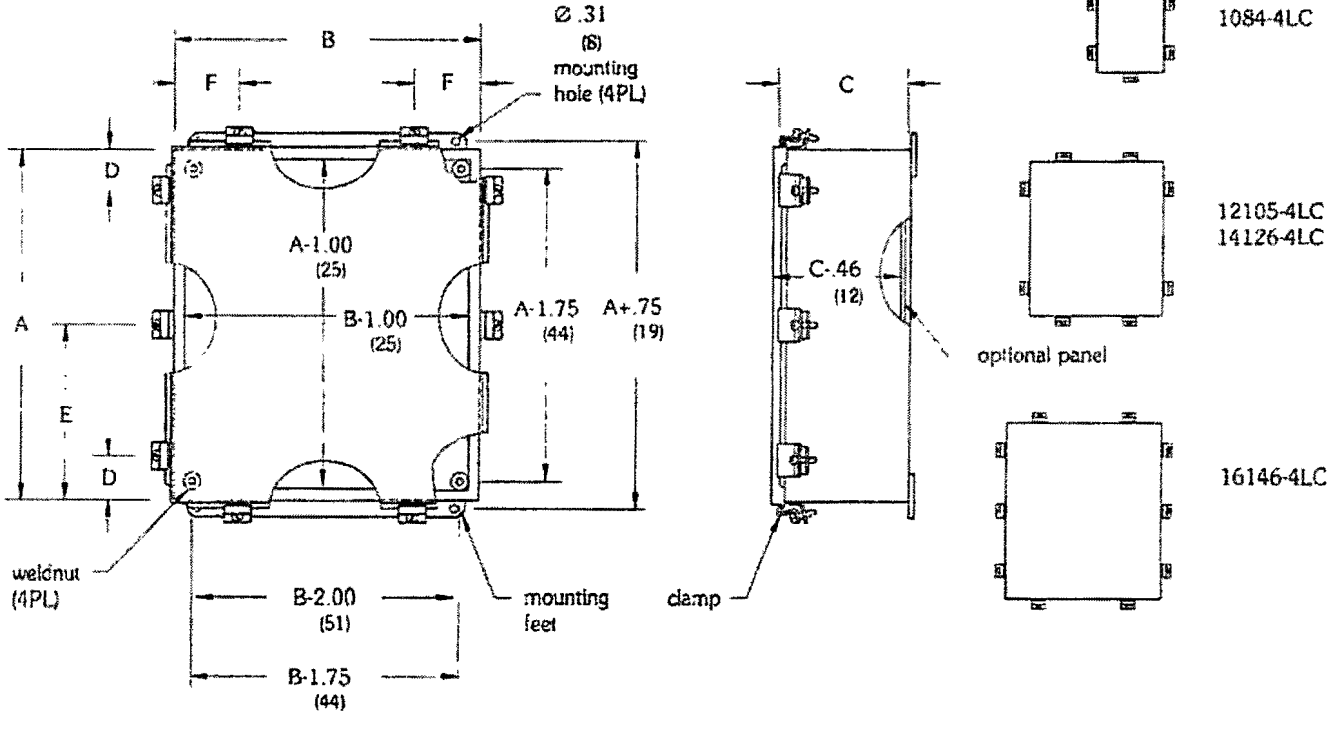

Cover Clamp Layout

Notes: Dimensions are in inches. Millimeters shown are for reference only.
Data subject to change without notice.

BUILDING WIRE

600 Volt UL 90°C
THHN/THWN Insulation
Copper Conductor

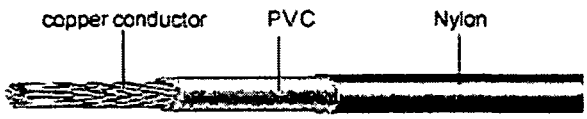

Catalog No.	Size AWG/kcmil	No. of Strands	PVC Insulation Thickness Mils	Nylon Jacket Thickness Mils	Overall Diameter Inch	Net Weight Lbs/Mft
HW001 01401	14	7	15	4	.12	16
HW001 01201	12	7	15	4	.14	25
HW001 01001	10	7	20	4	.17	39
HW001 00801	8	7	30	4	.23	66
HW001 00601	6	7	30	5	.25	98
HW001 00401	4	7	40	6	.33	155
HW001 00301	3	7	40	6	.36	190
HW001 00201	2	7	40	6	.39	235
HW001 00101	1	19	50	7	.45	300
HW001 10101	1/0	19	50	7	.50	370
HW001 20101	2/0	19	50	7	.54	460
HW001 30101	3/0	19	50	7	.60	570
HW001 40101	4/0	19	50	7	.66	710
HW001 25001	250	37	60	8	.72	845
HW001 35001	350	37	60	8	.83	1165
HW001 50001	500	37	60	8	.96	1640
HW001 75001	750	61	70	9	1.17	2480
HW001 10001	1000	61	70	9	1.32	3300

Application:
For use in general wiring applications for lighting and power in conduits, ducts, or other approved raceways with maximum conductor temperature of 90°C in dry locations and 75°C in wet locations. Chemical, gasoline and oil resistant.

Conductor:
Soft bare annealed copper per ASTM B-3, Class B stranding per ASTM B-8.

Insulation:
Heat and moisture resistant PVC per UL Standard 83.

Jacket:
Clear Nylon per UL Standard 62.

Flame Test:
UL VW-1

Additional Standards:
- Federal Specification CID A-A-55543
- UL 1063 (Type MTW for stranded items)
- UL 758 (Type AWM 105°C dry, 80°C in oil)

MULTI-PURPOSE MECHANICAL PROTECTION

TYPE UL, TYPE EF

TYPE UL and **TYPE EF** liquid tight conduit is utilized where protection from adverse conditions is required, providing mechanical protection and security from water, dust, and other contaminants.

TYPE UL liquid tight conduit manufactured by Eastern is suitable for applications that require a UL listed, metallic liquid tight conduit. The conduit is UV resistant, has excellent dielectric properties, and remains flexible in cold temperatures.

TYPE UL complies with standard 360 which specifies an integral copper ground wire in sizes 3/8" through 1 1/4".

TYPE EF is a JIC type conduit suitable for applications that require an extra flexible metallic liquid tight wherever movement or vibration is present.

Both are **"Self Measuring"**, an innovative Eastern feature that provides you with *sequential* footage markings.

TYPE UL

Trade Size	Inside Diameter (Minimum)	Inside Diameter (Maximum)	Outside Diameter (Minimum)	Outside Diameter (Maximum)	Weight per Hundred Feet (lbs)	Bend Diameter (Inches)	Standard Cartons (Feet)	Standard Reels (Feet)
3/8	.484	.504	.690	.710	25	4	100	600/1200
1/2	.622	.642	.822	.822	30	6	100	500/1000
3/4	.820	.840	1.030	1.050	41	8	100	500
1	1.041	1.066	1.290	1.315	58	10	100	400
1 1/4	1.380	1.410	1.630	1.660	73	12.5	50	250
1 1/2	1.575	1.600	1.865	1.900	84	15	50	150
2	2.020	2.045	2.340	2.375	114	20	50	100
2 1/2	2.480	2.505	2.840	2.875	160	25	25	
3	3.070	3.100	3.460	3.500	192	30	25	
3 1/2	3.500	3.540	3.960	4.000	220	35	25	
4	4.000	4.040	4.460	4.500	245	40	25	

TYPE EF

Trade Size	Inside Diameter (Minimum)	Inside Diameter (Maximum)	Outside Diameter (Minimum)	Outside Diameter (Maximum)	Weight per Hundred Feet (lbs)	Bend Diameter (Inches)	Standard Cartons (Feet)	Standard Reels (Feet)
3/8	.484	.504	.690	.710	19	3	100	600/1200
1/2	.622	.642	.822	.822	23	4	100	500/1000
3/4	.820	.840	1.030	1.050	29	5	100	500
1	1.041	1.066	1.290	1.315	42	7	100	400
1 1/4	1.380	1.410	1.630	1.660	55	8	50	250
1 1/2	1.575	1.600	1.865	1.900	68	9	50	150
2	2.020	2.045	2.340	2.375	190	12	50	100
2 1/2	2.480	2.505	2.840	2.875	117	17	12/25	
3	3.070	3.100	3.460	3.500	142	20	12/25	
3 1/2	3.500	3.540	3.960	4.000	194	23	25	
4	4.000	4.040	4.460	4.500	245	25	12/25	

Approvals: * UL 360- (for Type UL)

Typical Applications: * Equipment Builders, OEMs, HVAC, General Construction

tyco Electrical & Metal Products

EASTERN

1-800-483-3473

www.easternwire.com

Allied **RIGID**

Quality, Long Lasting Steel Conduit

Heavy Duty

Allied Rigid is precision manufactured for dependable, long-lasting value and protection for the electrical raceway system. Allied Rigid also provides radiation protection, magnetic shielding and resists impact.

Kwik-Couple® RIGID

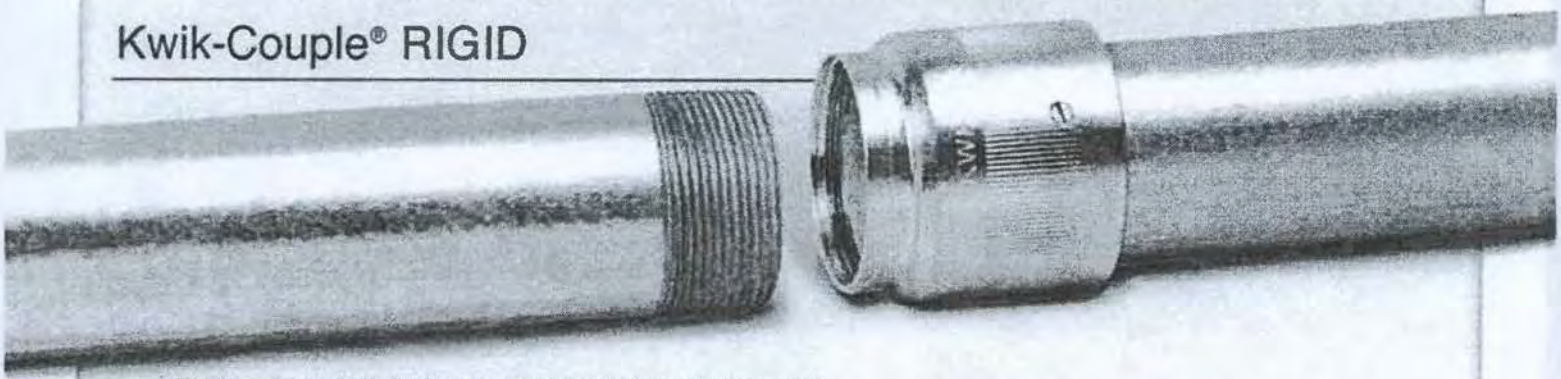

Allied's patented* Kwik-Couple Rigid cuts threaded conduit installation time and cost significantly. Kwik-Couple comes installed right on the conduit or elbows, right where you need it. Just line up the ends, spin the coupling forward onto the next piece and wrench tighten. It's that easy!

*U.S. Patent Numbers 4258936,4547004.

allied®
TUBE & CONDUIT

Allied **RIGID** Specifications

...OVIDES FULL ELECTRICAL SYSTEM PROTECTION

Allied RIGID is precision manufactured for dependable, long-lasting value and protection for the electrical raceway system.

Manufactured from high-strength steel, Allied RIGID combines damage-resistant strength with ductility to assure easy bending, cutting and joining. It also provides smooth, continuous raceways for fast wire-pulling. No need to worry about damage to the conduit system even when pulling through multiple 90° bends.

Allied RIGID is hot-dipped galvanized inside and out. It is top-coated with a compatible organic layer to inhibit white rust and increase corrosion resistance.

Allied RIGID is impact and crush resistant for maximum conductor protection.

The 3/4" taper NPT threads (ANSI B1.20.1) are full cut and hot galvanized after cutting. Color-coded end-cap thread protectors keep the threads clean and sharp and also provide instant trade size recognition. Even trade sizes are color-coded blue, 1/2 trade sizes are black, and 1/4 trade sizes are red.

EMI SHIELDING

...d RIGID greatly reduces electromagnetic ...s, effectively shielding computers and sensitive electronic equipment from the electromagnetic interference caused by power distribution systems. For further information, visit our website for a free download of the **GEMI** (Grounding and ElectroMagnetic Interference) analysis software and related research papers.

FULL CODES AND STANDARDS COMPLIANCE

Allied RIGID is covered by article 344 of the National Electrical Code. It is listed to Underwriters Laboratories Safety Standard U.L. 6, and is manufactured to ANSI C80.1, both of which have been adopted as Federal Specifications in lieu of WWC 581.
Allied RIGID is recognized as an equipment grounding conductor by NEC Article 250. Documentation for compliance with NEC Article 250 is also available in the **GEMI** (Grounding and ElectroMagnetic Interference) analysis software and related research studies found at the www.alliedeg.com website.

Installation of Rigid Metal Conduit shall be in accordance with the National Electrical Code and U.L. General Information card #DYIX. Master bundles conform to NEMA standard RN2.

SPECIFICATION DATA

RIGID Metal Conduit shall be hot-dip galvanized steel equal to that manufactured by Allied Tube & Conduit Corporation. Threads shall be hot galvanized after cutting. RIGID shall be produced in accordance with U.L. Safety Standard #6 and ANSI C80.1 and shall be listed by a nationally recognized testing laboratory with follow-up service. Where **Kwik-Couple RIGID** is used it shall also meet U.L. Safety Standard #514-B. It is noted that these U.L. standards have been adopted by the federal government and separate military specifications no longer exist.

For more information, contact Allied at **(800) 882-5543**, or visit our website at **www.alliedeg.com**

Weights and Dimensions for Galvanized Rigid Tubing

Trade Size Designator		*Approx. Wt.* Per 100 Ft. (30.5M)*		*Nominal Outside Diameter*[1]		*Nominal Wall Thickness*		*Quantity In Master Bundle*	
U.S.	Metric	lb.	kg	in.	mm	in.	mm	ft.	m
1/2	16	82	37.2	0.840	21.3	0.104	2.60	2500	762.5
3/4	21	109	49.4	1.050	26.7	0.107	2.70	2000	610 0
1	27	161	73.0	1.315	33.4	0.126	3.20	1250	381.3
1-1/4	35	218	98.9	1.660	42 2	0.133	3.40	900	274 5
1-1/2	41	263	119.3	1.900	48.3	0.138	3.50	800	244.0
2	53	350	158.7	2 375	60.3	0.146	3.70	600	183.0
2-1/2	63	559	253.5	2.875	73.0	0.193	4.90	370	112.9
3	78	727	329.7	3.500	88.9	0.205	5 20	300	91.5
3-1/2	91	880	399.1	4.000	101.6	0.215	5.50	250	76.3
4	103	1030	467.1	4.500	114.3	0.225	5.70	200	61.0
5	129	1400	634.9	5.563	141.3	0.245	6.20	150	45.8
6	155	1840	834.5	6.625	168.3	0 265	6.80	100	30.5

* For more information only, not a spec requirement.

NOTE. Length = 10 ft. (3.05m) with a tolerance of +/- .25 in. (6.35mm).
[1] NEMA Standard

Weights and Dimensions for Kwik-Couple Rigid

Trade Size Designator		*Approx. Wt. Per 100 Ft. (30.5M)*		*Nominal Outside Diameter*[1]		*Nominal Wall Thickness*[2]		*Quantity In Master Bundle*	
U.S.	Metric	lb.	kg	in.	mm	in.	mm	ft.	m
2-1/2	63	559	253.5	2.875	73.0	0.193	4.90	400	122.0
3	78	727	329.7	3.500	88.9	0.205	5.20	300	91.5
3-1/2	91	880	399.1	4.000	101.6	0.215	5.50	250	76.3
4	103	1030	467 1	4.500	114.3	0 225	5.70	200	61.0

[1]Outside diameter tolerances. +/- .025 in. (.64mm) [2]For information only, not a spec requirement

Allied Tube & Conduit
Registered to ISO 9001:2000
File Numbers A2725, A1834, A12748

Allied Tube & Conduit, AFC Cable Systems, Cope, Power-Strut, and Tyco are trademarks or registered trademarks of Tyco and or its affiliates in the United States and or other countries. All other brand names, product names, or trademarks belong to their respective owners.

© Allied Tube & Conduit Printed in U.S.A. ATC-L-1749-0608

BARE COPPER

Soft Drawn
Solid or Stranded

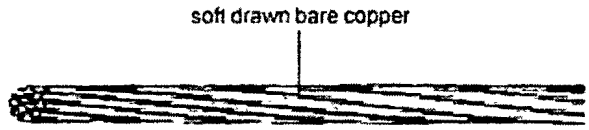

Catalog No.	Size AWG/kcmil	Cross Sectional Area Circular Mils	No. of Strands	Overall Diameter Inch	Net Weight Lbs/Mft
Soft Drawn Bare Copper - Solid					
HW000 0801S	8	16510	Solid	.12	50
HW000 0601S	6	26240	Solid	.16	79
HW000 0401S	4	41740	Solid	.20	126
HW000 0201S	2	66360	Solid	.25	201
Soft Drawn Bare Copper - Stranded					
HW000 01401	14	4110	7	.07	13
HW000 01201	12	6530	7	.09	20
HW000 01001	10	10380	7	.11	32
HW000 00801	8	16510	7	.14	51
HW000 00601	6	26240	7	.18	81
HW000 00401	4	41740	7	.23	129
HW000 00201	2	66360	7	.29	205
HW000 00101	1	83690	19	.33	258
HW000 10101	1/0	105600	19	.37	326
HW000 20101	2/0	133100	19	.41	411
HW000 30101	3/0	167800	19	.47	518
HW000 40101	4/0	211600	19	.52	653
HW000 25001	250	250000	37	.57	772
HW000 35001	350	350000	37	.68	1081
HW000 50001	500	500000	37	.81	1544
HW000 75001	750	750000	61	.99	2316
HW000 10001	1000	1000000	61	1.15	3088

Application:
For use on insulators for overhead distribution circuits or for grounding conductors.

Conductor:
Soft bare annealed copper per ASTM B-3, Class B stranding per ASTM B-8. Tin-coated soft, medium-hard, or hard drawn copper wire also available upon request.

Additional Standards:
Federal Specification CID A-A-59551 (non-insulated)

ERITECH

Features

- Economic two-piece molds use standard L-160 and L-159 handles clamps – the same clamps you use with other CADWELD® molds
- Saves labor costs. A GY connection can be made by one person in about one minute – much faster than other methods
- Costs less. Saves you 1/3 over other models thanks to innovative design techniques and advanced manufacturing technology
- Simple to use
- Easy cable alignment
- Includes a new baffle mold cover which reduces emissions and extends the handle clamp life
- Available with wear plates

CADWELD® GY Molds

For Through Connections to Ground Rods

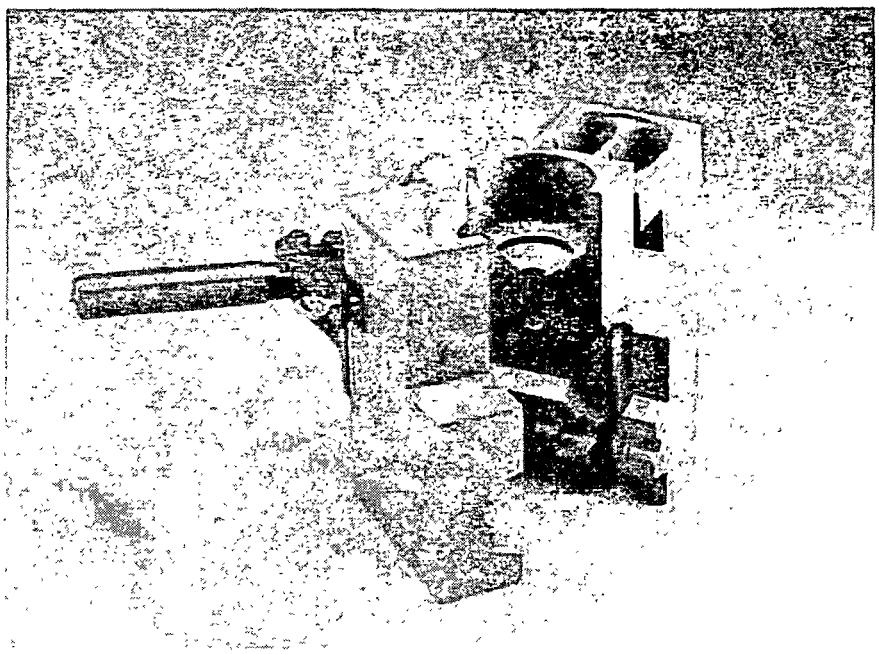

For through cable connections to the side of ground rods, there has never been a faster or easier way to make a reliable CADWELD® connection. The two-piece CADWELD GY mold lets you make connections in a trench in about half the time it would take with compression connections or other exothermic connections and at a fraction of the cost.

GY molds are simple to use and provide for easy cable alignment. The molds include a baffle mold cover that reduces emissions and extends handle clamp life.

ERICO

ERITECH®

CADWELD® GY Molds

For Through Connections to Ground Rods

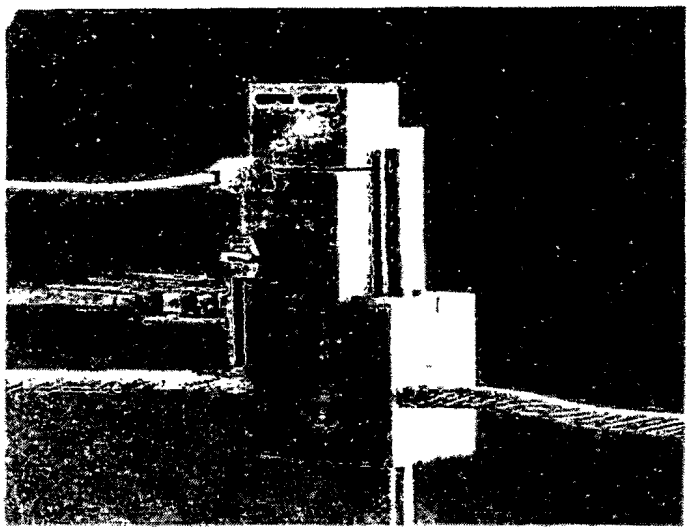

Two-piece GY positioned on ground rod (locking pliers required to support mold during connection process not shown)

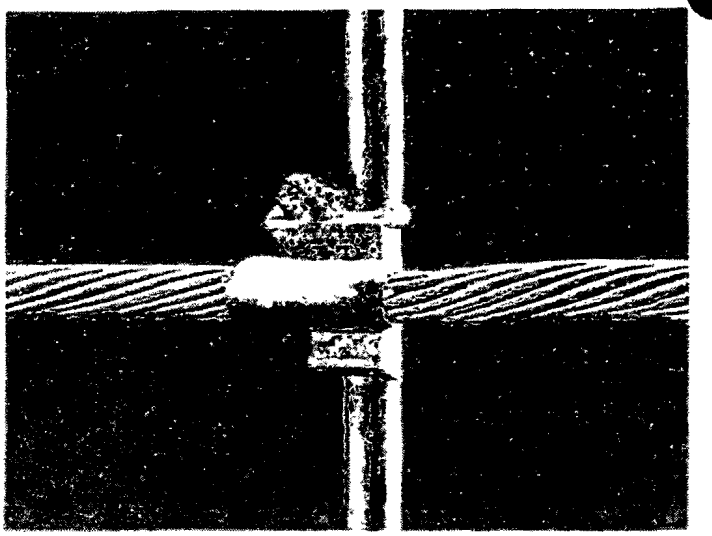

Completed GY connection

Ordering Information

Copper Clad Ground Rod (Run)	Conductor Size (Tap)	Mold Part Number	Traditional Welding Material Part Number	CADWELD® PLUS Welding Material Part Number
1/2"	1/0 CONC	GYR142C	115	115PLUSF20
	2/0 CONC	GYR142G	115	115PLUSF20
	3/0 CONC	GYR142L	150	150PLUSF20
	4/0 CONC	GYR142Q	150	150PLUS F20
	250 CONC	GYR142V	150	150PLUSF20
5/8"	2 SOL	GYR161T	90	90PLUSF20
	2 CONC	GYR161V	90	90PLUSF20
	1/0 CONC	GYR162C	115	115PLUSF20
	2/0 CONC	GYR162G	115	115PLUSF20
	3/0 CONC	GYR162L	150	150PLUSF20
	4/0 CONC	GYR162Q	150	150PLUSF20
	250 CONC	GYR162V	150	150PLUSF20
	350 CONC	GYR163D	250	250PLUSF20
	500 CONC	GYF163Q	400	400PLUSF20
3/4"	2 SOL	GYR181T	90	90PLUSF20
	2CONC	GYR181V	90	90PLUSF20
	1/0 CONC	GYR182C	115	115PLUSF20
	2/0 SOL	GYR182G	115	115PLUSF20
	3/0 CONC	GYR182L	150	150PLUSF20
	4/0 CONC	GYR182Q	150	150PLUSF20
	250 CONC	GYR182V	200	200PLUSF20
	350 CONC	GYR283D	300	300PLUSF20
	500 CONC	GYF183Q	500	500PLUSF20

Consult ERICO® for molds to fit other ground rod / cable size combinations

WARNING
ERICO products shall be installed and used only as indicated in ERICO's product instruction sheets and training materials. Instruction sheets are available at www.erico.com and from your ERICO customer service representative. Improper installation, misuse, misapplication or other failure to completely follow ERICO's instructions and warnings may cause product malfunction, property damage, serious bodily injury and death.

Copyright ©2006 ERICO International Corporation. All rights reserved
CADDY, CADWELD, CRITEC, ERICO, ERIFLEX, ERITECH, and LENTON are registered trademarks of ERICO International Corporation

Excellent for connecting multiple electrodes with a single cable, such as in substation grounding.

U-Bolt Ground Clamps

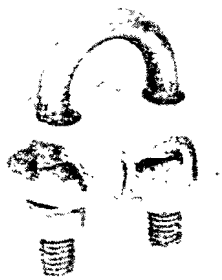

- For connecting copper or copper-clad steel grounding conductor to ground rod or pipe
- Specially designed spacer provides proper alignment between cable and electrode and affords more positive contact area
- All components cast or forged from copper alloy
- UL467 Listed for direct burial

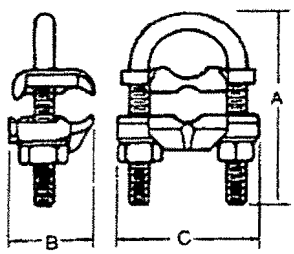

CAT. NO.*	CONDUCTOR RANGE (CU) MAX.	CONDUCTOR RANGE (CU) MIN.	NOMINAL ROD SIZE (IN.) MAX.	NOMINAL ROD SIZE (IN.) MIN.	IPS PIPE SIZE (IN.) MAX.	IPS PIPE SIZE (IN.) MIN.	DIMENSIONS (IN.) A	DIMENSIONS (IN.) B	DIMENSIONS (IN.) C
GUV584	4	8	¾"	¾"	¾"	—	2 3/16	1 5/16	2 1/4
GUV5821	2/0	4	¾"	⅝"	¾"	—	2 3/16	1 5/16	2 1/4
GUV5825	250	2/0	¾"	⅝"	¾"	—	21 3/16	1 5/16	2 1/4
GUV704	4	8	1"	⅞"	¾"	1/2"	2 3/8	1 5/16	2 3/8
GUV7021	2/0	4	1"	⅞"	¾"	1/2"	2 3/8	1 5/16	2 3/8
GUV7825	250	2/0	1"	⅞"	¾"	1/2"	2 3/8	1 5/16	2 3/8
GUV1124	4	8	1 1/8"	1 1/8"	1"	—	3 3/16	1 5/16	2 3/8
GUV11021	2/0	4	1 1/8"	1 1/8"	1"	—	3 3/16	1 5/16	2 3/8
GUV1324	4	8	1 1/8"	1 3/8"	1 1/4"	—	3 3/16	19 3/16	2 3/16
GUV13021	2/0	4	1 1/8"	1 3/8"	1 1/4"	—	3 3/16	1 5/16	2 3/16
GUV13025	250	2/0	1 1/8"	1 3/8"	1 1/4"	—	3 3/16	1 5/16	2 3/16
GUV1584	4	8	1 3/8"	1 3/8"	1 1/2"	—	3 3/16	19 3/16	3 3/16
GUV15021	2/0	4	1 3/8"	1 3/8"	1 1/2"	—	3 3/16	1 5/16	3 3/16
GUV15025	250	2/0	1 3/8"	1 3/8"	1 1/2"	—	3 3/16	1 5/16	3 3/16
GUV204	4	8	2 3/8"	2"	2"	—	4 1/16	1 5/16	3 1/16
GUV2021	2/0	4	2 3/8"	2"	2"	—	4 1/16	1 5/16	3 1/16
GUV2025	250	2/0	2 3/8"	2"	2"	—	4 1/16	1 5/16	3 1/16
GUV21221	2/0	4	2 3/8"	2 1/2"	2 1/2"	—	4 1/16	1 5/16	4 3/16
GUV21225	250	2/0	2 3/8"	2 1/2"	2 1/2"	—	4 1/16	19 3/16	4 3/16
GUV3021	2/0	4	3 1/2"	3"	3"	—	5 3/16	1 5/16	4 3/16
GUV3025	250	2/0	3 1/2"	3"	3"	—	5 3/16	1 5/16	4 3/16
GUV31221	2/0	4	4"	3 1/2"	3 1/2"	—	6 1/16	1 5/16	5 1/4
GUV4021	2/0	4	4 1/2"	4"	4"	—	6 5/16	1 5/16	5 7/16
GUV4025	250	2/0	4 1/2	4"	4"	—	6 5/16	1 5/16	5 7/16

* For tin plating add suffix P in Cat. No. Contact factory for price and availability

UL does not list tin-plated bronze grounding devices.

Waterpipe Ground Clamps

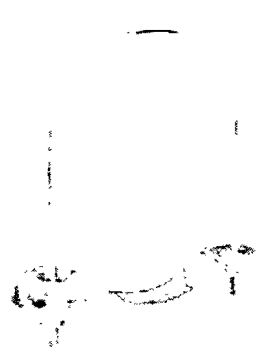

CAT. NO.	GROUND WIRE SIZE	WATER PIPE SIZE
2-TB	#6, #4, #2	½", ¾", 1" or rebar 4-10
3-TB	#6, #4, #2	1¼", 1½" or 2"
4	#6, #4, #2	2½", 3" or 3½"
5-TB	#6, #4, #2	4", 4½" or 5"
6	#6, #4, #2	6"

Malleable iron. #6 – #2 AWG ground wire.

United States Tel: 901.252.8000 800.816.7809
Canada Tel: 450.347.5318 Fax: 450.347.1976
Technical Services Tel: 888.862.3289
Thomas&Betts
C-105

Allied RIGID

Quality, Long Lasting Steel Conduit

Heavy Duty

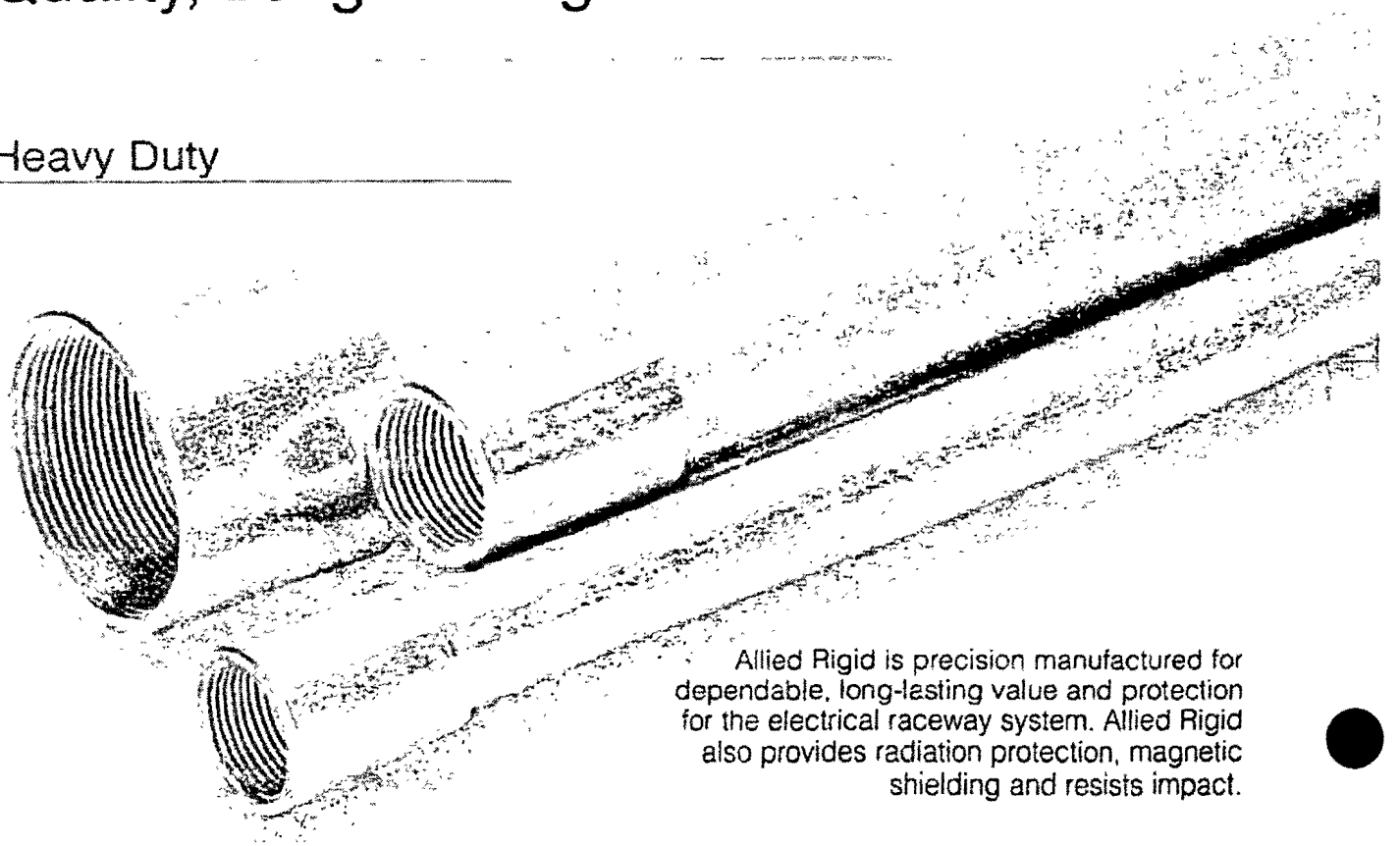

Allied Rigid is precision manufactured for dependable, long-lasting value and protection for the electrical raceway system. Allied Rigid also provides radiation protection, magnetic shielding and resists impact.

Kwik-Couple® RIGID

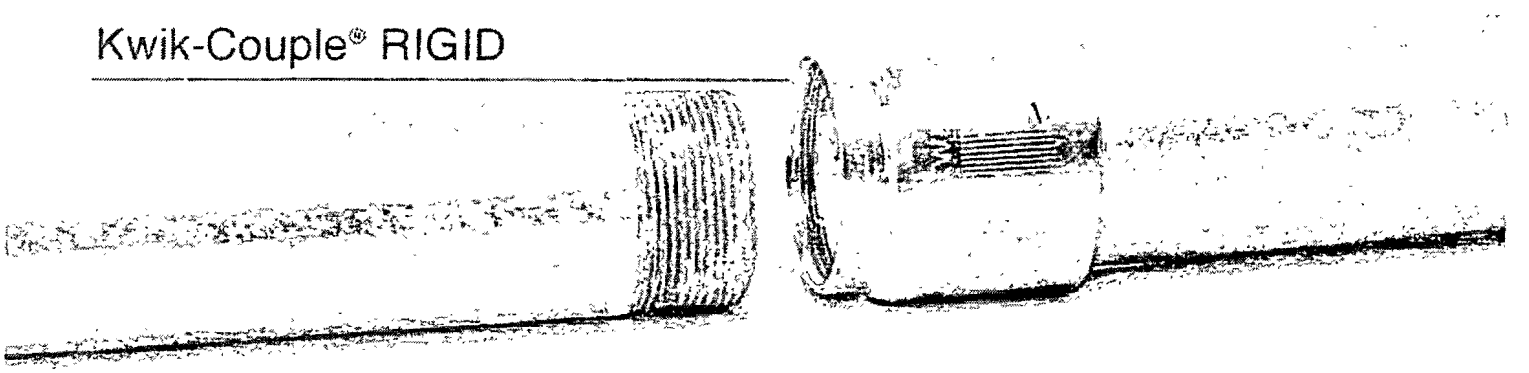

Allied's patented* Kwik-Couple Rigid cuts threaded conduit installation time and cost significantly. Kwik-Couple comes installed right on the conduit or elbows, right where you need it. Just line up the ends, spin the coupling forward onto the next piece and wrench tighten. It's that easy!

*U.S. Patent Numbers 4256936,4547004.

allied®
TUBE & CONDUIT

Allied RIGID Specifications

...OVIDES FULL ELECTRICAL ...STEM PROTECTION

Allied RIGID is precision manufactured for dependable, long-lasting value and protection for the electrical raceway system.

Manufactured from high-strength steel, Allied RIGID combines damage-resistant strength with ductility to assure easy bending, cutting and joining. It also provides smooth, continuous raceways for fast wire-pulling. No need to worry about damage to the conduit system even when pulling through multiple 90° bends.

Allied RIGID is hot-dipped galvanized inside and out. It is top-coated with a compatible organic layer to inhibit white rust and increase corrosion resistance.

Allied RIGID is impact and crush resistant for maximum conductor protection.

The 3/4" taper NPT threads (ANSI B1.20.1) are full cut and hot galvanized after cutting Color-coded end-cap thread protectors keep the threads clean and sharp and also provide instant trade size recognition. Even trade sizes are color-coded blue, 1/2 trade sizes are black, and 1/4 trade sizes are red.

...MI SHIELDING

...d RIGID greatly reduces electromagnetic fields, effectively shielding computers and sensitive electronic equipment from the electromagnetic interference caused by power distribution systems. For further information, visit our website for a free download of the **GEMI** (Grounding and ElectroMagnetic Interference) analysis software and related research papers.

FULL CODES AND STANDARDS COMPLIANCE

Allied RIGID is covered by article 344 of the National Electrical Code. It is listed to Underwriters Laboratories Safety Standard U.L. 6. and is manufactured to ANSI C80.1, both of which have been adopted as Federal Specifications in lieu of WWC 581.
Allied RIGID is recognized as an equipment grounding conductor by NEC Article 250. Documentation for compliance with NEC Article 250 is also available in the **GEMI** (Grounding and ElectroMagnetic Interference) analysis software and related research studies found at the www.alliedeg.com website.

Installation of Rigid Metal Conduit shall be in accordance with the National Electrical ...de and U.L. General Information card #DYIX. ...er bundles conform to NEMA standard RN2.

SPECIFICATION DATA

RIGID Metal Conduit shall be hot-dip galvanized steel equal to that manufactured by Allied Tube & Conduit Corporation. Threads shall be hot galvanized after cutting. RIGID shall be produced in accordance with U.L. Safety Standard #6 and ANSI C80.1 and shall be listed by a nationally recognized testing laboratory with follow-up service. Where **Kwik-Couple RIGID** is used it shall also meet U.L. Safety Standard #514-B. It is noted that these U.L. standards have been adopted by the federal government and separate military specifications no longer exist.

For more information, contact Allied at (800) 882-5543, or visit our website at www.alliedeg.com

Weights and Dimensions for Galvanized Rigid Tubing

Trade Size Designator		Approx. Wt.* Per 100 Ft. (30.5M)		Nominal Outside Diameter'		Nominal Wall Thickness		Quantity In Master Bundle	
U.S.	Metric	lb.	kg	in.	mm	in.	mm	ft.	m
1/2	16	82	37.2	0.840	21.3	0.104	2.60	2500	762 5
3/4	21	109	49.4	1.050	26.7	0.107	2.70	2000	610.0
1	27	161	73.0	1.315	33.4	0.126	3.20	1250	381.3
1-1/4	35	218	98.9	1.660	42 2	0.133	3.40	900	274.5
1-1/2	41	263	119.3	1.900	48 3	0.138	3.50	800	244.0
2	53	350	158.7	2.375	60.3	0.146	3.70	600	183.0
2-1/2	63	559	253.5	2.875	73.0	0.193	4.90	370	112.9
3	78	727	329.7	3.500	88.9	0.205	5.20	300	91.5
3-1/2	91	880	399.1	4.000	101.6	0.215	5.50	250	76.3
4	103	1030	467.1	4.500	114.3	0.225	5.70	200	61.0
5	129	1400	634.9	5.563	141.3	0.245	6.20	150	45.8
6	155	1840	834.5	6.625	168.3	0.266	6.80	100	30.5

' For more information only; not a spec requirement.

NOTE: Length = 10 ft. (3.05m) with a tolerance of +/- .25 in. (6.35mm).
* NEMA Standard

Weights and Dimensions for Kwik-Couple Rigid

Trade Size Designator		Approx. Wt. Per 100 Ft. (30.5M)		Nominal Outside Diameter'		Nominal Wall Thickness'		Quantity In Master Bundle	
U.S.	Metric	lb.	kg	in.	mm	in.	mm	ft.	m
2-1/2	63	559	253.5	2 875	73.0	0.193	4 90	400	122.0
3	78	727	329.7	3.500	88.9	0.205	5.20	300	91.5
3-1/2	91	880	399.1	4.000	101.6	0.215	5.50	250	76.3
4	103	1030	467.1	4.500	114.3	0.225	5 70	200	61.0

'Outside diameter tolerances: +/- .025 in. (64mm) 'For information only; not a spec requirement.

Schedule 40 Elbows Standard Radius

Available in plain and integral belled end for use with nonmetallic solvent weld fittings.

ETL Listed to UL 651 in compliance to the NEC

UL LISTED E35297

Item	Plain End Part No.	Belled End Part No.	Size	Plain End Std. Ctn. Qty.	Belled End Std. Ctn. Qty.
90° Elbow	UA9AD	UA9ADB	½"	50	50
	UA9ADR-CAR	UA9ADB	½"	25	50
	UA9AE	UA9AEB	¾"	25	25
	UA9AFR-CTN	UA9AFB-CTN	1"	25	25
	UA9AG	UA9AGB	1¼"	20	20
	UA9AH	UA9AHB	1½"	25	25
	UA9AJ	UA9AJB	2"	20	20
	UA9AJ-CAR	UA9AJB	2"	5	20
	UA9AK-CAR	UA9AKB-CAR	2½"	10	10
	UA9AL	UA9ALB-CAR	3"	1	5
	UA9AM	UA9AMB	3½"	1	20
	UA9AN	UA9ANB	4"	1	1
	UA9AP	UA9APB	5"	1	1
	UA9AR	UA9ARB	6"	1	1
45° Elbow	UA7AD	UA7ADB	½"	50	50
	UA7AE	UA7AEB	¾"	25	25
	UA7AER-CAR	UA7AEB	¾"	15	25
	UA7AF	UA7AFB	1"	20	20
	UA7AF-CAR	UA7AFB	1"	15	20
	UA7AG	UA7AGB	1¼"	20	20
	UA7AH	UA7AHB	1½"	20	20
	UA7AJ	UA7AJB	2"	20	20
	UA7AJ-CAR	UA7AJB-CAR	2"	4	4
	UA7AK	UA7AKB	2½"	20	20
	UA7AK-CAR	UA7AKB-CAR	2½"	5	5
	UA7AL-CAR	UA7ALB	3"	5	25
	UA7AL-CAR	UA7ALB-CAR	3"	5	10
	UA7AM	UA7AMB	3½"	1	20
	UA7AN	UA7ANB	4"	1	20
	UA7AP	UA7APB	5"	1	1
	UA7AR	UA7ARB	6"	1	1
30° Elbow	UA6AD	UA6ADB	½"	50	50
	UA6AE	UA6AEB	¾"	25	25
	UA6AF	UA6AFB	1"	25	1
	UA6AG	UA6AGB	1¼"	20	20
	UA6AH	UA6AHB	1½"	25	1
	UA6AJ	UA6AJB	2"	20	20
	UA6AK	UA6AKB	2½"	10	20
	UA6AL	UA6ALB	3"	1	1
	UA6AM	UA6AMB	3½"	1	1
	UA6AN	UA6ANB	4"	1	1
	UA6AP	UA6APB	5"	1	1
	UA6AR	UA6ARB	6"	1	1

Item	Plain End Part No.	Belled End Part No.	Size	Plain End Std. Ctn. Qty.	Belled End Std. Ctn. Qty.
22½° Elbow	UA5AD	–	½"	1	–
	UA5AE	–	¾"	1	–
	UA5AF	–	1"	1	–
	UA5AG	–	1¼"	1	–
	UA5AH	–	1½"	1	–
	UA5AJ	UA5AJB	2"	25	1
	UA5AK	–	2½"	20	–
	UA5AL	UA5ALB	3"	5	1
	UA5AM	–	3½"	1	–
	UA5AN	UA5ANB	4"	1	1
	UA5AP	UA5APB	5"	1	1
	UA5AR	UA5ARB	6"	1	1
11¼° Elbow	UA3AD	–	½"	1	–
	UA3AE	–	¾"	1	–
	UA3AF	–	1"	1	–
	UA3AG	–	1¼"	1	–
	UA3AH	–	1½"	1	–
	UA3AJ	–	2"	1	–
	UA3AK	–	2½"	1	–
	UA3AL	–	3"	1	–
	UA3AM	–	3½"	1	–
	UA3AN	UA3ANB	4"	1	1
	UA3AP	–	5"	1	–
	UA3AR	–	6"	1	–

Standard Radius Elbow Dimensions

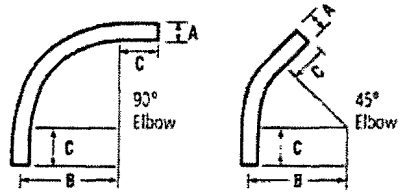

Size	A	B Min. (Radius)	C Min.
½"	.840	4"	1½"
¾"	1.050	4½"	1½"
1"	1.315	5¾"	1⅞"
1¼"	1.660	7¼"	2"
1½"	1.900	8¼"	2"
2"	2.375	9½"	2"
2½"	2.875	10½"	3"
3"	3.500	13"	3⅛"
3½"	4.000	15"	3¼"
4"	4.500	16"	3⅜"
5"	5.563	24"	3⅝"
6"	6.625	30"	3¾"

Integral Belled End Dimensions

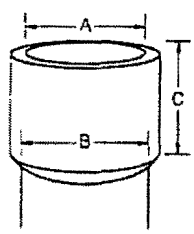

Trade Size	A At Entrance Max.	A At Entrance Min.	B At Bottom Max.	B At Bottom Min.	C Socket Depth Max.	C Socket Depth Min.
½"	.860	0.844	0.844	0.828	1.500	0.652
¾"	1.074	1.054	1.056	1.036	1.500	0.719
1"	1.340	1.320	1.320	1.300	1.875	0.875
1¼"	1.689	1.665	1.667	1.643	2.000	0.938
1½"	1.930	1.906	1.906	1.882	2.000	1.062
2"	2.405	2.381	2.381	2.357	2.000	1.125
2½"	2.905	2.875	2.883	2.853	3.000	1.469
3"	3.530	3.500	3.507	3.477	3.125	1.594
3½"	4.065	3.965	4.007	3.977	3.250	1.687
4"	4.565	4.465	4.506	4.476	3.375	1.750
5"	5.643	5.543	5.583	5.523	3.625	1.937
6"	6.708	6.608	6.644	6.584	3.750	2.125

Schedule 40 Elbows Special Radius

*Consult factory for additional sizes/configurations

ETL Listed to UL 651 in compliance to the NEC

LISTED E35297

Segment	Plain End Part No.	Belled End Part No.	Nom. Diam.	Radius (in.)	Plain End Std. Ctn. Qty.	Belled End Std. Ctn. Qty.
90° Elbow	UA9CF	UA9CFB	1"	18"	1	1
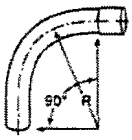	UA9DF	UA9DFB	1"	24"	1	1
	UA9EF	UA9EFB	1"	30"	1	1
	UA9FF	–	1"	36"	1	–
	UA9HF	–	1"	48"	1	–
	UA9CG	UA9CGB	1¼"	18"	1	1
	UA9DG	UA9DGB	1¼"	24"	1	1
	UA9EG	UA9EGB	1¼"	30"	1	1
	UA9FG	UA9FGB	1¼"	36"	1	1
	UA9HG	–	1¼"	48"	1	–
	UA9CH	UA9CHB	1½"	18"	1	1
	UA9DH	UA9DHB	1½"	24"	1	1
	UA9EH	UA9EHB	1½"	30"	1	1
	UA9FH	UA9FHB	1½"	36"	1	1
	UA9HH	–	1½"	48"	1	–
	UA9CJ	UA9CJB	2"	18"	1	1
	UA9DJ	UA9DJB-UPC	2"	24"	1	1
	UA9EJ	UA9EJB	2"	30"	1	1
	UA9FJ-UPC	UA9FJB	2"	36"	1	1
	UA9HJ	UA9HJB	2"	48"	1	1
	UA9JJ	–	2"	72"	1	–
	UA9CK	UA9CKB	2½"	18"	1	1
	UA9DK	UA9DKB-UPC	2½"	24"	1	1
	UA9EK	UA9EKB	2½"	30"	1	1
	UA9FK-UPC	UA9FKB	2½"	36"	1	1
	UA9HK	UA9HKB	2½"	48"	1	1
	UA9CL	UA9CLB	3"	18"	1	1
	UA9DL	UA9DLB-UPC	3"	24"	1	1
	UA9EL	UA9ELB	3"	30"	1	1
	UA9FL	UA9FLB	3"	36"	1	1
	UA9HL	UA9HLB	3"	48"	1	1
	UA9JL	–	3"	60"	1	–
	UA9DM	UA9DMB	3½"	24"	1	1
	UA9EM	UA9EMB	3½"	30"	1	1
	UA9FM	UA9FMB	3½"	36"	1	1
	UA9HM	UA9HMB	3½"	48"	1	1
	–	UA9CNB	4"	18"	–	1
	UA9DN	UA9DNB	4"	24"	1	1
	UA9EN	UA9ENB	4"	30"	1	1
	UA9FN	UA9FNB	4"	36"	1	1
	UA9HN	UA9HNB	4"	48"	1	1
	UA9IN	UA9INB	4"	60"	1	1
	UA9JN	–	4"	72"	1	1
	UA9EP	UA9EPB	5"	30"	1	1
	UA9FP	UA9FPB	5"	36"	1	1
	UA9HP	UA9HPB	5"	48"	1	1
	UA9IP	UA9IPB	5"	60"	1	1
	UA9FR	UA9FRB	6"	36"	1	1
	UA9HR	UA9HRB	6"	48"	1	1
	UA9IR	UA9IRB	6"	60"	1	1
	–	UA9TRB	6"	180"	–	1
	UA9HT	–	8"	48"	1	1

Segment	Plain End Part No.	Belled End Part No.	Nom. Diam.	Radius (in.)	Plain End Std. Ctn. Qty.	Belled End Std. Ctn. Qty.
45° Elbow	UA7CF	–	1"	18"	1	–
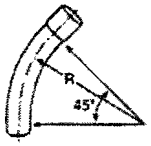	UA7DF	–	1"	24"	1	–
	UA7EF	–	1"	30"	1	–
	UA7FF	–	1"	36"	1	–
	UA7HF	–	1"	48"	1	–
	UA7CG	–	1¼"	18"	1	–
	UA7DG	–	1¼"	24"	1	–
	UA7EG	–	1¼"	30"	1	–
	UA7FG	–	1¼"	36"	1	–
	UA7HG	–	1¼"	48"	1	–
	UA7CH	–	1½"	18"	1	–
	UA7DH	–	1½"	24"	1	–
	UA7EH	–	1½"	30"	1	–
	UA7FH	UA7FHB	1½"	36"	1	1
	UA7HH	–	1½"	48"	1	–
	–	UA7BJB	2"	12"	–	1
	UA7CJ	UA7CJB	2"	18"	1	1
	UA7DJ	UA7DJB	2"	24"	1	1
	UA7EJ	UA7EJB	2"	30"	1	1
	UA7FJ	UA7FJB	2"	36"	1	1
	UA7HJ	UA7HJB	2"	48"	1	1
	UA7SJ	–	2"	150"	1	–
	UA7CK	–	2½"	18"	1	–
	UA7DK	UA7DKB	2½"	24"	1	1
	UA7EK	–	2½"	30"	1	–
	UA7FK	UA7FKB	2½"	36"	1	1
	UA7HK	–	2½"	48"	1	–
	UA7CL	UA7CLB	3"	18"	1	1
	UA7DL	UA7DLB	3"	24"	1	1
	UA7EL	UA7ELB	3"	30"	1	1
	UA7FL	UA7FLB	3"	36"	1	1
	–	UA7HLB	3"	48"	–	1
	UA7DM	–	3½"	24"	1	–
	UA7EM	–	3½"	30"	1	–
	UA7FM	–	3½"	36"	1	–
	UA7DN	UA7DNB	4"	24"	1	1
	UA7EN	UA7ENB	4"	30"	1	1
	UA7FN	UA7FNB	4"	36"	1	1
	UA7HN	UA7HNB	4"	48"	1	1
	–	UA7NNB	4"	120"	–	1
	UA7SN	UA7SNB	4"	150"	1	–
	UA7EP	UA7EPB	5"	30"	1	1
	UA7FP	UA7FPB	5"	36"	1	1
	UA7HP	UA7HPB	5"	48"	1	1
	–	UA7IPB	5"	60"	–	1
	–	UA7NPB	5"	120"	–	1
	–	UA7SPB	5"	150"	–	1
	UA7FR	UA7FRB	6"	36"	1	1
	UA7HR	UA7HRB	6"	48"	1	1
	UA7FT	–	8"	36"	1	–
	UA7HT	–	8"	48"	1	–

Schedule 40 Elbows Special Radius

ETL Listed to UL 651 in compliance to the NEC

UL LISTED E35297

*Consult factory for additional sizes/configurations

Segment	Plain End Part No.	Belled End Part No.	Nom. Diam.	Radius (in.)	Plain End Std. Ctn. Qty.	Belled End Std. Ctn. Qty.
30° Elbow	UA6CJ	–	2"	18"	1	–
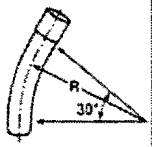	UA6DJ	UA6DJB	2"	24"	1	1
	UA6FJ	UA6FJB	2"	36"	1	1
	UA6HJ	UA6HJB	2"	48"	1	1
	UA6CK	–	2½"	18"	1	–
	UA6DK	–	2½"	24"	1	–
	UA6CL	–	3"	18"	1	–
	UA6DL	UA6DLB	3"	24"	1	1
	UA6FL	UA6FLB	3"	36"	1	1
	UA6HL	UA6HLB	3"	48"	1	1
	UA6DM	–	3½"	24"	1	–
	UA6FM	–	3½"	36"	1	–
	UA6HM	–	3½"	48"	1	–
	UA6DN	–	4"	24"	1	–
	UA6FN	UA6FNB	4"	36"	1	1
	UA6HN	UA6HNB	4"	48"	1	1
	UA6FP	UA6FPB	5"	36"	1	1
	UA6HP	UA6HPB	5"	48"	1	1
	UA6FR	UA6FRB	6"	36"	1	1
	UA6HR	UA6HRB	6"	48"	1	1

Segment	Plain End Part No.	Belled End Part No.	Nom. Diam.	Radius (in.)	Plain End Std. Ctn. Qty.	Belled End Std. Ctn. Qty.
11¼° Elbow	UA3DJ	UA3DJB	2"	24"	1	25
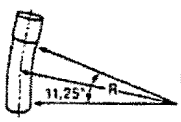	UA3FJ	UA3FJB	2"	36"	1	1
	UA3HJ	–	2"	48"	1	–
	UA3HK	–	2½"	48"	1	–
	UA3DL	UA3DLB	3"	24"	1	1
	UA3FL	UA3FLB	3"	36"	1	1
	UA3HL	–	3"	48"	1	–
	UA3DM	–	3½"	24"	1	–
	UA3HM	–	3½"	48"	1	–
	UA3DN	UA3DNB	4"	24"	1	1
	UA3FN	UA3FNB	4"	36"	1	1
	–	UA3SNB	4"	150"	–	1
	UA3HN	UA3HNB	4"	48"	1	1
	UA3FP	UA3FPB	5"	36"	1	1
	UA3HP	–	5"	48"	1	–
	–	UA3UPB	5"	240"	–	1
	UA3FR	UA3FRB	6"	36"	1	1
	UA3HR	–	6"	48"	1	–
	UA3FT	–	8"	36"	1	–

Segment	Plain End Part No.	Belled End Part No.	Nom. Diam.	Radius (in.)	Plain End Std. Ctn. Qty.	Belled End Std. Ctn. Qty.
22½° Elbow	UA5FF	–	1"	36"	1	–
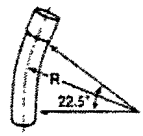	UA5FG	–	1¼"	36"	1	–
	UA5FH	UA5FHB	1½"	36"	1	1
	UA5CJ	UA5CJB	2"	18"	1	1
	UA5DJ	UA5DJB	2"	24"	1	25
	UA5EJ	UA5EJB	2"	30"	1	1
	UA5FJ	UA5FJB	2"	36"	1	1
	UA5HJ	–	2"	48"	1	–
	UA5VJ	–	2"	300"	1	–
	UA5CK	–	2½"	18"	1	–
	UA5DK	–	2½"	24"	1	–
	UA5EK	–	2½"	30"	1	–
	UA5FK	–	2½"	36"	1	–
	UA5HK	–	2½"	48"	1	–
	–	UA5CLB	3"	18"	1	1
	UA5DL	UA5DLB	3"	24"	1	1
	UA5EL	UA5ELB	3"	30"	1	1
	UA5FL	UA5FLB	3"	36"	1	1
	UA5HL	–	3"	48"	1	–
	UA5VL	–	3"	300"	1	–
	UA5DM	–	3½"	24"	1	–
	UA5EM	–	3½"	30"	1	–
	UA5FM	–	3½"	36"	1	–
	UA5HM	–	3½"	48"	1	–
	UA5DN	UA5DNB	4"	24"	1	1
	UA5EN	UA5ENB	4"	30"	1	1
	UA5FN	UA5FNB	4"	36"	1	1
	UA5HN	UA5HNB	4"	48"	1	
	UA5JN	–	4"	60"	1	–
	UA5JN	–	4"	72"	1	–
	UA5SN	UA5SNB	4"	150"	1	
	–	UA5UNB	4"	240"	–	1
	–	UA5VNB	4"	300"	–	1
	–	UA5DPB	5"	24"	1	1
	UA5EP	UA5EPB	5"	30"	1	1
	UA5FP	UA5FPB	5"	36"	1	1
	UA5HP	UA5HPB	5"	48"	1	1
	UA5JP	–	5"	60"	1	–
	UA5SP	–	5"	150"	1	–
	–	UA5UPB	5"	240"	–	1
	–	UA5VPB	5"	300"	–	1
	UA5FR	UA5FRB	6"	36"	1	1
	UA5HR	UA5HRB	6"	48"	1	1
	UA5JR	–	6"	60"	1	–
	UA5RR	–	6"	144"	1	–
	UA5SR	–	6"	150"	1	–
	UA5VR	–	6"	300"	1	–
	UA5FT	–	8"	36"	1	–
	UA5HT	–	8"	48"	1	–

Schedule 80 Elbows

Standard Radius

Available in plain end only for use with nonmetallic solvent weld fittings

Item	Plain End Part No.	Belled End Part No.	Size	Plain End Std. Ctn. Qty.	Belled End Std. Ctn. Qty
90° Elbow 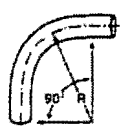	UB9AD	–	½"	50	–
	UB9AD-CAR	–	½"	25	–
	UB9AE	–	¾"	25	–
	UB9AE-CAR	–	¾"	15	–
	UB9AF	–	1"	25	–
	UB9AF-CAR	–	1"	10	–
	UB9AG	–	1¼"	20	–
	UB9AG-CAR	–	1¼"	5	–
	UB9AH	–	1½"	25	–
	UB9AH-CAR	–	1½"	5	–
	UB9AJ	–	2"	20	–
	UB9AJ-CAR	–	2"	5	–
	UB9AK-CAR	–	2½"	10	–
	UB9AL-CAR	–	3"	5	–
	UB9AN	–	4"	1	–
	UB9AP	UB9APB	5"	1	1
	UB9AR		6"	1	–
45° Elbow	UB7AD	–	½"	50	–
	UB7AE-UPC	–	¾"	25	–
	UB7AF-UPC	–	1"	20	–
	UB7AG	–	1¼"	20	–
	UB7AH	–	1½"	20	–
	UB7AH-CAR	–	1½"	5	–
	UB7AJ-UPC	–	2"	20	–
	UB7AK	–	2½"	20	–
	UB7AL	–	3"	1	–
	UB7AN	–	4"	1	–
	UB7AP	UB7APB	5"	1	1
	UB7AR	–	6"	1	–
30° Elbow 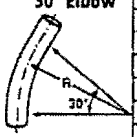	UB6AD	–	½"	50	–
	UB6AE	–	¾"	25	–
	UB6AF	–	1"	25	–
	UB6AG	–	1¼"	5	–
	UB6AH	–	1½"	25	–
	UB6AJ	–	2"	20	–
	UB6AK	–	2½"	1	–
	UB6AL	–	3"	1	–
	UB6AN	–	4"	1	–
	UB6AP	–	5"	1	–
	UB6AR	–	6"	1	–
22½° Elbow	UB5AL	–	3"	5	–
	UB5AN	–	4"	1	–
	UB5AP	UB5APB	5"	1	1
11¼° Elbow	UB3AL	–	3"	1	–
	UB3AR	–	6"	1	–

Flexible PVC Elbows

- UL listed for exposed and direct burial applications in accordance with Article 356 of 2002 NEC
- 0° - 90° bending and offset applications
- O-ring seal for moisture tight connections
- Maintains round shape throughout bend
- Sunlight resistant
- Non-corrosive – all PVC and Neoprene material
- Fully assembled and ready to use

Part No.	Size	Std. Ctn. Qty.	Std. Ctn. Wt. (lbs.)	Length Fully Assembled
UAFAD	½"	8	1.6	8.5"
UAFAE	¾"	6	1.9	9.6"
UAFAF	1"	6	2.4	11.9"

Special Radius

ETL Listed to UL 651 in compliance to the NEC

UL LISTED E35297

Segment	Plain End Part No.	Belled End Part No.	Nom. Diam.	Radius (in.)	Plain End Std. Ctn. Qty.	Belled End Std. Ctn. Qty.
90° Elbow 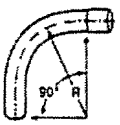	UB9CF	–	1"	18"	1	–
	UB9DF	–	1"	24"	1	–
	UB9FF	–	1"	36"	1	–
	UB9HF	–	1"	48"	1	–
	UB9CG	–	1¼"	18"	1	–
	UB9DG	–	1¼"	24"	1	–
	UB9FG	–	1¼"	36"	1	–
	UB9HG	–	1¼"	48"	1	–
	UB9CH	–	1½"	18"	1	–
	UB9DH-UPC	UB9DHB	1½"	24"	1	1
	UB9FH	–	1½"	36"	1	–
	UB9HH	–	1½"	48"	1	–
	UB9CJ	–	2"	18"	1	–
	UB9DJ-UPC	UB9DJB	2"	24"	1	1
	UB9FJ	UB9FJB	2"	36"	1	1
	UB9HJ	–	2"	48"	1	–
	UB9CK	–	2½"	18"	1	–
	UB9DK-UPC	UB9DKB	2½"	24"	1	1
	UB9FK	UB9FKB	2½"	36"	1	1
	UB9HK	–	2½"	48"	1	–
	UB9CL	–	3"	18"	1	–
	UB9DL	UB9DLB	3"	24"	1	1
	UB9FL	UB9FLB	3"	36"	1	1
	UB9HL	–	3"	48"	1	–
	UB9DN	UB9DNB	4"	24"	1	1
	UB9FN	UB9FNB	4"	36"	1	1
	UB9HN	UB9HNB	4"	48"	1	1
	UB9NN	–	4"	120"	1	–
	UB9FP	–	5"	36"	1	–
	UB9HP	–	5"	48"	1	–
	UB9JP	–	5"	60"	1	–
	UB9FR	–	6"	36"	1	–
	UB9HR	–	6"	48"	1	–
	UB9JR	–	6"	60"	1	–
45° Elbow 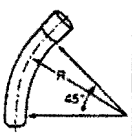	UB7CF	–	1"	18"	1	–
	UB7DF	–	1"	24"	1	–
	UB7FF	–	1"	36"	1	–
	UB7HF	–	1"	48"	1	–
	UB7DG	–	1¼"	24"	1	–
	UB7FG	–	1¼"	36"	1	–
	UB7HG	–	1¼"	48"	1	–
	UB7CH	–	1½"	18"	1	–
	UB7DH	UB7DHB	1½"	24"	1	1
	UB7FH	–	1½"	36"	1	–
	UB7HH	–	1½"	48"	1	–
	UB7CJ	–	2"	18"	1	–
	UB7DJ	UB7DJB	2"	24"	1	1
	UB7FJ	UB7FJB	2"	36"	1	1
	UB7HJ	–	2"	48"	1	–
	UB7DK	UB7DKB	2½"	24"	1	1
	UB7FK	–	2½"	36"	1	–
	UB7HK	–	2½"	48"	1	–
	UB7CL	–	3"	18"	1	–
	UB7DL	UB7DLB	3"	24"	1	1
	UB7FL	UB7FLB	3"	36"	1	1
	UB7HL	–	3"	48"	1	–
	UB7DN	UB7DNB	4"	24"	1	1
	UB7FN	UB7FNB	4"	36"	1	1
	UB7HN	–	4"	48"	1	–
	UB7FP	–	5"	36"	1	–
	UB7HP	–	5"	48"	1	–
	UB7FR	–	6"	36"	1	–
	UB7HR	–	6"	48"	1	–
	UB7JR	–	6"	60"	1	–
30° Elbow	UB6FN	–	4"	36"	1	–
	UB6FR	–	6"	36"	1	–
22½° Elbow 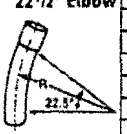	–	UB5DHB	1½"	24"	–	20
	–	UB5DJB	2"	24"	–	20
	–	UB5FJB	2"	36"	–	25
	–	UB5DKB	2½"	24"	–	15
	UB5DL	UB5DLB	3"	24"	1	10
	–	UB5FLB	3"	36"	–	1
	UB5DN	UB5DNB	4"	24"	1	5
	–	UB5FNB	4"	36"	–	1
	UB5FP	–	5"	36"	1	–
11¼° Elbow	UB3FP	–	5"	36"	1	–

Corrosion Resistance of Carlon Schedule 40 and Schedule 80 PVC Conduit and Fittings

Carlon Schedule 40 and Schedule 80 are generally acceptable for use in environments containing the chemicals below. These environmental resistance ratings are based upon tests where the specimens were placed in complete submergence in the reagent listed. Schedule 40 and Schedule 80 can be used in many process areas where chemicals not on this list are manufactured or used because worker safety requirements dictate that any air presence or splashing be at a very low level.

If there are any questions for specific suitability in a given environment, prototype samples should be tested under actual conditions.

Acetic Acid 0-20%
Acetic Acid 20-30%
Acetic Acid 30-60%
Acetic Acid 80%
Acetic Acid – Glacial
Acetic Acid Vapors
Acetylene
Adipic Acid
Alum
Aluminum Chloride
Aluminum Fluoride
Aluminum Hydroxide
Aluminum Oxychloride
Aluminum Nitrate
Aluminum Sulfate
Ammonia-Dry Gas
Ammonium Bifluoride
Ammonium Carbonate
Ammonium Chloride
Ammonium Hydroxide 28%
Ammonium Metaphosphate
Ammonium Nitrate
Ammonium Persulfate
Ammonium Phosphate – Neutral
Ammonium Sulfate
Ammonium Sulfide
Ammonium Thiocyanate
Amyl Alcohol
Anthraquinone
Anthraquinonesulfonic Acid
Antimony Trichloride
Aqua Regia
Arsenic Acid 80%
Arylsulfonic Acid
Barium Carbonate
Barium Chloride
Barium Hydroxide
Barium Sulfate
Barium Sulfide
Beet – Sugar Liquor
Benzine Sulfonic Acid 10%
Benzoic Acid
Bismuth Carbonate
Black Liquor (Paper Industry)
Bleach – 12.5% Active Cl_2
Borax
Boric Acid
Brine
Breeder Pellets – Dane. Fish
Bromic Acid
Bromine – Water
Butane
Butadiene
Butyl Alcohol
Butyl Phenol
Butylene
Butyric Acid
Calcium Bisulfite
Calcium Carbonate
Calcium Chlorate
Calcium Chloride
Calcium Hydroxide
Calcium Hypochlorite
Calcium Nitrate
Calcium Sulfate
Carbonic Acid
Carbon Dioxide Gas – Wet
Carbon Dioxide – Aqueous Solution
Carbon Monoxide
Caustic Potash
Caustic Soda
Chloracetic Acid
Chloral Hydrate
Chlorine Gas (Dry)
Chlorine Gas (Moist)
Chlorine Water
Chlorosulfonic Acid
Chrome Alum
Chromic Acid 10%
Chromic Acid 30%
Chromic Acid 40%
Chromic Acid 50%
Citric Acid
Copper Chloride
Copper Cyanide
Copper Fluoride
Copper Nitrate
Copper Sulfate
Cottonseed Oil
Cresylic Acid 50%
Crude Oil – Sour
Crude Oil – Sweet
Demineralized Water
Dextrin
Dextrose
Diglycolic Acid
Disodium Phosphate
Ethyl Alcohol
Ethylene Glycol
Fatty Acids
Ferric Chloride
Ferric Nitrate
Ferric Sulfate
Ferrous Chloride
Ferrous Sulfate
Fluorine Gas – Wet
Fluorine Gas – Dry
Fluoroboric Acid
Fluorosilicic Acid
Formaldehyde
Formic Acid
Fructose
Gallic Acid
Gas – Coke Oven
Gas – Natural (Dry)
Gas – Natural (Wet)
Gasoline – Sour
Gasoline – Refined
Glucose
Glycerine (Glycerol)
Glycol
Glycolic Acid
Green Liquor (Paper Industry)
Heptane
Hexanol, Tertiary
Hydrobromic Acid 20%
Hydrochloric Acid 0% - 25%
Hydrochloric Acid 25% - 40%
Hydrocyanic Acid or Hydrogen Cyanide
Hydrofluoric Acid 10%
Hydrofluorosilicic Acid
Hydrogen Phosphide
Hydrogen Sulfide – Dry
Hydrogen Sulfide – Aqueous Solution
Hydroquinone
Hydroxylamine Sulfate
Iodine
Kerosene
Lactic Acid 25%
Lauric Acid
Lauryl Chloride
Lauryl Sulfate
Lead Acetate
Lime Sulfur
Linoleic Acid
Linseed Oil
Lubricating Oils
Magnesium Carbonate
Magnesium Chloride
Magnesium Hydroxide
Magnesium Nitrate
Magnesium Sulfate
Maleic Acid
Malic Acid
Mercuric Chloride
Mercuric Cyanide
Mercurous Nitrate
Mercury
Methyl Sulfate
Methylene Chloride
Mineral Oils
Naphthalene
Nickel Chloride
Nickel Nitrate
Nitric Acid, Anydrous
Nitric Acid 20%
Nitric Acid 40%
Nitric Acid 60%
Nitrobenzene
Nitrous Oxide
Oils and Fats
Oils – Petroleum – (See Type)
Oleic Acid
Oxalic Acid
Palmitic Acid 10%
Perchloric Acid 10%
Phenylhydrazine Hydrochloride
Phosgene, Gas
Phosphoric Acid – 0-25%
Phosphoric Acid – 25-50%
Phosphoric Acid – 50-85%
Photographic Chemicals
Plating Solutions
Potassium Bicarbonate
Potassium Bichromate
Potassium Borate
Potassium Bromide
Potassium Carbonate
Potassium Chloride
Potassium Chromate
Potassium Cyanide
Potassium Dichromate
Potassium Ferricyanide
Potassium Ferrocyanide
Potassium Fluoride
Potassium Hydroxide
Potassium Nitrate
Potassium Perborate
Potassium Perchlorate
Potassium Permanganate 10%
Potassium Persulfate
Potassium Sulfate
Propane
Propyl Alcohol
Silicic Acid
Silver Cyanide
Silver Nitrate
Silver Plating Solutions
Sodium Acetate
Sodium Arsenite
Sodium Benzoate
Sodium Bicarbonate
Sodium Bisulfate
Sodium Bisulfite
Sodium Bromide
Sodium Chlorate
Sodium Chloride
Sodium Cyanide
Sodium Dichromate
Sodium Ferricyanide
Sodium Ferrocyanide
Sodium Fluoride
Sodium Hydroxide
Sodium Hypochlorite
Sodium Nitrate
Sodium Nitrite
Sodium Sulfate
Sodium Sulfide
Sodium Sulfite
Sodium Thiosulfate (Hypo)
Stannic Chloride
Stannous Chloride
Stearic Acid
Sulfur
Sulfur Dioxide – Gas Dry
Sulfur Trioxide
Sulfuric Acid – 0-10%
Sulfuric Acid – 10-75%
Sulfuric Acid – 75-90%
Sulfurous Acid
Tannic Acid
Tanning Liquors
Tartaric Acid
Titanium Tetrachloride
Triethanolamine
Trimethyl Propane
Trisodium Phosphate
Turpentine
Urea
Vinegar
Whiskey
White Liquor (Paper Industry)
Wines
Zinc Chloride
Zinc Chromate
Zinc Cyanide
Zinc Nitrate
Zinc Sulfate

Suggested Format for Specifying Carlon Nonmetallic Conduit, Conduit Fittings and Junction Boxes

A. The Carlon rigid nonmetallic conduit system shall be installed as indicated on the drawings and as specified herein.

B. All wiring shall be installed in Carlon rigid nonmetallic conduit. All conduit shall be secured by means of proper fittings. All fittings shall be Carlon.

C. Carlon outlet boxes, fittings and junction boxes shall be used for all outlets, pull boxes and junction points. (Lighting fixtures shall not be supported or hung from PVC junction boxes but be supported in position by other means.)

D. Exposed conduits shall be mounted securely by suitable hangers or straps with the maximum spacing of points of supports not greater than indicated by Section 352.30 of the NEC.

E. Except where embedded in concrete or direct buried, Carlon conduit shall be supported to permit adequate lineal movement to allow for expansion and contraction of conduit due to temperature change.

F. For aboveground installations where temperature change in excess of 14°C (25°F) is anticipated, expansion joints shall be installed. See Table 352.44(A) NEC for expansion characteristics.

G. Proper care shall be taken when field bending is employed to maintain the internal diameter and wall thickness of the conduit.

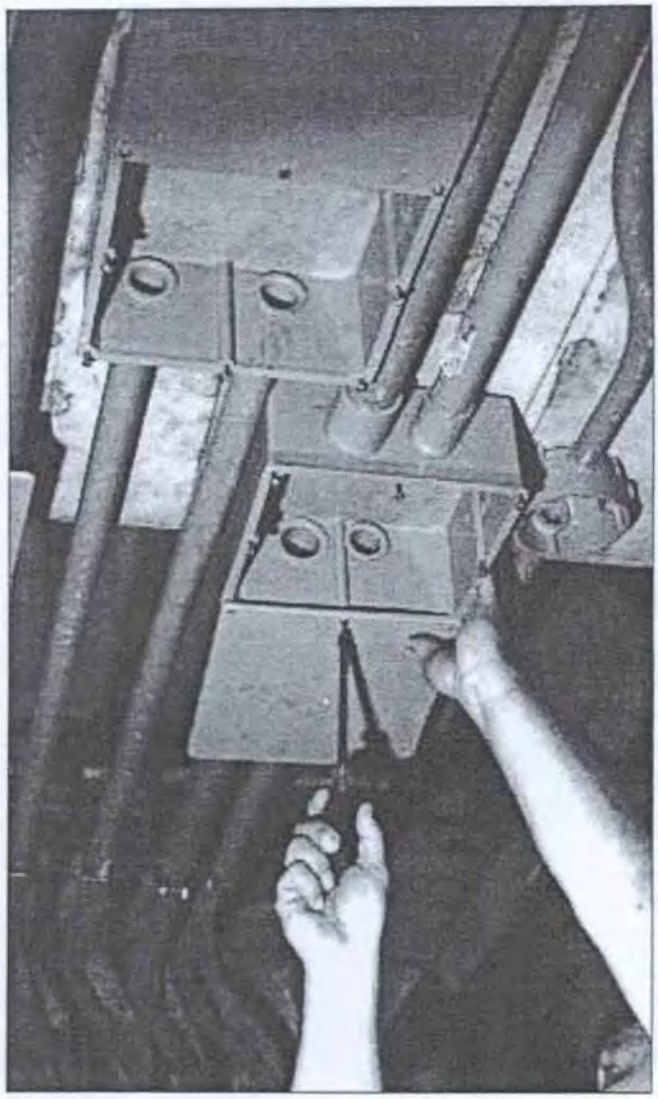

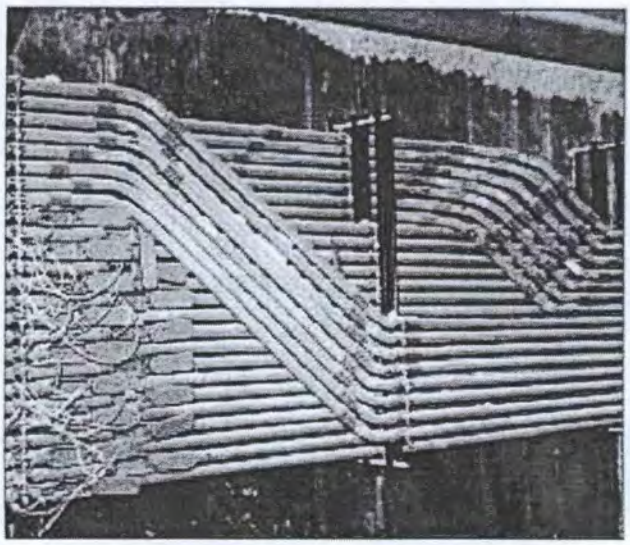

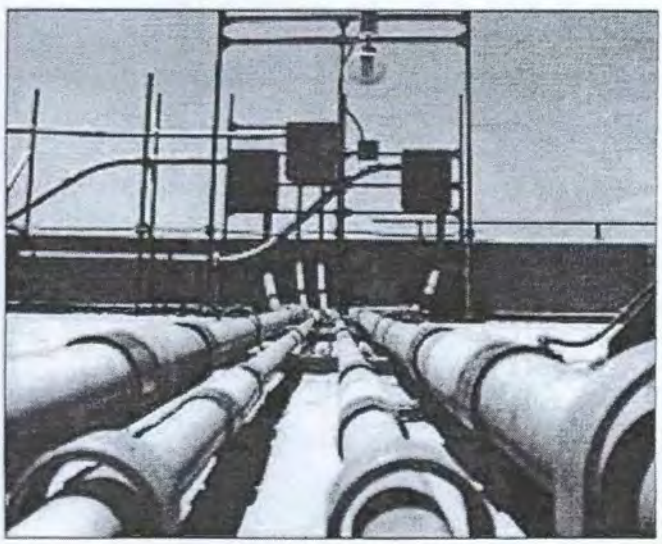

Carlon® Rigid Nonmetallic Conduit (RNC), Fittings & Accessories

Carlon® manufactures the most complete line of nonmetallic conduits and fittings in the electrical industry. Carlon Schedule 40 and Schedule 80 conduits are designed for use aboveground and underground as described in the National Electrical Code. Specify only Carlon conduits and fittings to insure raceway system integrity.

Features

Ease of Installation Nonmetallic conduits are 1/4 to 1/5 the weight of metallic systems, can be installed in less than half the time, and are easily fabricated on the job.

Safety Nonmetallic conduits are nonconductive, assuring a safe system.

Impact Resistant Carlon Schedule 40 and Schedule 80 nonmetallic conduits are resistant to sunlight and are listed for exposed or outdoor usage. The use of expansion fittings allows the system to expand and contract with temperature variations.

Corrosion Resistant Carlon conduits and fittings are nonmetallic and will not rust or corrode.

Carlon nonmetallic Schedule 40 and Schedule 80 conduits and elbows are manufactured to NEMA TC-2, Federal specification WC1094A and UL 651 specifications. Fittings are manufactured to NEMA TC-3, Federal specification WC1094A and UL514B. Both conduit and fittings carry respective UL or ETL Listings and UL or ETL labels.

Schedule 40 PVC Rigid Nonmetallic Conduit (RNC).

(Heavy Wall EPC)

ETL Listed to UL 651 in compliance to the NEC

UL LISTED E35297

RUS Listed

Listed for underground applications encased in concrete or direct burial. Also for use in exposed or concealed applications aboveground.

• Sunlight resistant • Rated for use with 90°C conductors • Superior weathering characteristics

With Integral Bell*

Schedule 40 Heavy Wall

Part No.			Std. Crate Qty.		Wt. Per	Dimensions		
10'	20'	Nom. Size	10'	20'	100'	O.D.	I.D.	Wall
49005-010		1/2"	6000'		17	.840	.622	.109
49007-010	49007-020	3/4"	4400'	8800'	23	1.050	.824	.113
49008-010	49008-020	1"	3600'	7200'	34	1.315	1.049	.133
49009-010	49009-020	1 1/4"	3300'	6600'	46	1.660	1.380	.140
49010-010	49010-020	1 1/2"	2250'	4500'	55	1.900	1.610	.145
49011-010	49011-020	2"	1400'	2800'	73	2.375	2.067	.154
49012-010	49012-020	2 1/2"	930'	1860'	124	2.875	2.469	.203
49013-010	49013-020	3"	880'	1760'	163	3.500	3.068	.216
49014-010	49014-020	3 1/2"	630'	1260'	196	4.000	3.548	.226
49015-010	49015-020	4"	570'	1140'	232	4.500	4.026	.237
49016-010	49016-020	5"	380'	760'	315	5.563	5.047	.258
49017-010	49017-020	6"	260'	520'	409	6.625	6.065	.280

Rigid nonmetallic conduit is normally supplied in standard 10' lengths, with one belled end per length. For specific requirements, it may be produced in lengths shorter or longer than 10', with or without belled ends.

Use RNC Fittings with Schedule 40 and Schedule 80 Conduit.

Notes: 1. Special fittings and conduit sizes will be quoted on request.
2. DON'T FORGET TO ORDER CEMENT.
3. Carlon reserves the right to ship to the nearest unitized quantity.

Schedule 80 PVC Rigid Nonmetallic Conduit (RNC)

(Extra Heavy Wall EPC-80)

ETL Listed to UL 651 in compliance to the NEC

UL LISTED E35297

RUS Listed

Listed for use in aboveground and belowground applications that are subject to physical damage.

- Sunlight resistant
- Rated for use with 90°C conductors
- Superior weathering characteristics
- For use in areas subject to physical damage

With Integral Bell*

Schedule 80 Extra Heavy Wall

Part No. 10'	Part No. 20'	Nom. Size	Std. Crate Qty. 10'	Std. Crate Qty. 20'	Wt. Per 100'	Dimensions O.D.	Dimensions I.D.	Wall
49405-010	49405-020	1/2"	6000'	12000'	21	.840	.546	.147
49407-010	49407-020	3/4"	4400'	8000'	30	1.050	.742	.154
49408-010	49408-020	1"	3600'	7200'	44	1.315	.957	.179
49409-010	49409-020	1 1/4"	3300'	6600'	60	1.660	1.278	.191
49410-010	49410-020	1 1/2"	2250'	3600'	72	1.900	1.500	.200
49411-010	49411-020	2"	1400'	2800'	101	2.375	1.939	.218
49412-010	49412-020	2 1/2"	930'	1880	154	2.875	2.323	.276
49413-010	49413-020	3"	880'	1760'	210	3.500	2.900	.300
49415-010	49415-020	4"	570'	1140'	308	4.500	3.826	.337
49416-010	–	5"	380'	–	428	5.563	4.813	.375
49417-010	49417-020	6"	260'	520'	588	6.625	5.761	4.32

Rigid nonmetallic conduit is normally supplied in standard 10' lengths, with one belled end per length. For specific requirements, it may be produced in lengths shorter or longer than 10', with or without belled ends.

Use RNC Fittings with Schedule 40 and Schedule 80 Conduit.

Notes: 1. Special fittings and conduit sizes will be quoted on request.
2. DON'T FORGET TO ORDER CEMENT.
3. Carlon reserves the right to ship to the nearest unitized quantity.

Support of Carlon Rigid Nonmetallic Conduit in Aboveground Installations

Table 352.30(B) NEC shows the support requirements for Schedule 40 and Schedule 80 rigid PVC nonmetallic conduit.

Plastic conduit should always be installed away from steam lines, etc. Support straps should allow for lineal movement caused by expansion and contraction.

Maximum ambient temperature is 122°F (50°C).

Table 352.30(B), NEC

Trade Size	Maximum Spacing Between Supports (feet)
1/2 - 1	3
1 1/4 - 2	5
2 1/2 - 3	6
3 1/2 - 5	7
6	8

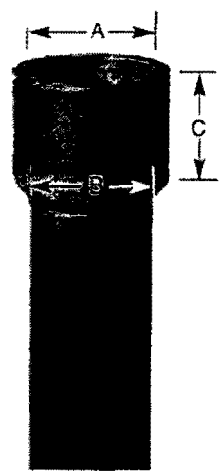

Acceptable Dimensions in Inches of Integral Bell per UL 651

Trade Size	A At Entrance (in.) Maximum	A At Entrance (in.) Minimum	B At Bottom (in.) Maximum	B At Bottom (in.) Minimum	C Nominal Bell Depth (in.)
1/2	0.860	0.844	0.844	0.828	1.375
3/4	1.074	1.054	1.056	1.036	1.500
1	1.340	1.320	1.320	1.300	1.750
1 1/4	1.689	1.665	1.667	1.643	1.875
1 1/2	1.930	1.906	1.906	1.882	2.750
2	2.405	2.381	2.381	2.357	3.250
2 1/2	2.905	2.875	2.883	2.853	3.250
3	3.530	3.500	3.507	3.477	3.875
3 1/2	4.065	3.965	4.007	3.977	3.875
4	4.565	4.465	4.506	4.476	4.625
5	5.643	5.543	5.583	5.523	5.625
6	6.708	6.608	6.644	6.584	6.375

Typical Properties of Conduit Raw Material Compound

Thermal

	ASTM Test	Typical Values
Co-efficient of Thermal Expansion-inch/inch/°F (properties @ 73.4°F)	D696	3.38×10^{-5}
Heat Distortion °F at 264 psi	D648	160°F
Thermal Conductivity BTU (hr.) (ft.) (°F/in.)	N/A	1.3

Mechanical

	ASTM Test	Typical Values
Specific Gravity	D792	1.43 - 1.6
Tensile Strength (psi) @ 73.4°F	D638	5,000-6,500
Izod Impact ft lbs./in. of notch	D256	0.65 - 1.5
Flexural Strength (psi)	D790	12,500
Compressive Strength (psi)	D695	9,000
Hardness (Durometer D)	D2240	85

Electrical

	ASTM Test	Typical Values
Dielectrical Strength volts/mil	D149	1100
Dielectric Constant 60 CPS @ 30°C	D150	4.00
Power Factor 60 CPS @ 30°C	D150	1.93

Impedance (Volts lost per ampere per 100 feet)

	3Ø 90% P.F.	80% P.F.	1Ø 90% P.F.	80% P.F.
Steel Conduit	.0118	.0123	.0136	.0142
Schedule 40®	.0105	.0106	.0121	.0122

Using 250 KCmil Cu. conductor, comparable values for other conductor sizes.

Wire Fill

Maximum number of conductors in Schedule 40 PVC conduit

(Based on Table 1, Chapter 9 of the NEC)

Type Letters	Conductor Size AWG, MCM	Trade Size ½	¾	1	1¼	1½	2	2½	3	3½	4	4½	5	6	8
THWN	14	13	24	39	69	94	154								
	12	10	18	29	51	79	114	164							
	10	6	11	18	32	44	73	194	160						
	8	3	5	9	19	22	36	51	71	106	136				
THHN	6	1	4	6	11	15	26	37	57	76	98	125	154		
	4	1	2	4	7	9	16	22	35	47	60	75	94	137	236
FEP (14 thru 2)	3	1	1	3	6	8	13	19	29	39	51	64	90	116	201
	2	1	1	3	5	7	11	16	25	33	43	54	67	97	169
FEPB (14 thru 8)	1		1	1	3	5	9	12	18	25	32	49	59	72	125
	1/0		1	1	3	4	7	10	15	21	27	33	42	61	105
PFA (14 thru 4/0)	2/0		1	1	2	3	6	8	13	17	22	28	35	51	88
	3/0		1	1	1	3	5	7	11	14	18	23	29	42	73
PFAH (14 thru 4/0)	4/0		1	1	1	2	4	6	9	12	15	19	24	35	61
	250			1	1	1	3	4	7	10	12	16	20	28	49
Z (14 thru 4/0)	300			1	1	1	3	4	6	8	11	13	17	24	42
	350			1	1	1	2	3	5	7	9	12	15	21	37
	400				1	1	1	3	5	6	8	10	13	19	33
XHHW (4 thru 500MCM)	500				1	1	1	2	4	5	7	9	11	16	27
	600				1	1	1	1	3	4	5	7	9	13	22
	700					1	1	1	3	4	5	6	8	11	19
	750					1	1	1	2	3	4	6	7	11	19
XHHW	6	1	3	5	9	13	21	30	47	63	81	102	128	165	320
	600				1	1	1	1	3	4	5	7	9	13	22
	700					1	1	1	3	4	5	6	7	11	19
	750					1	1	1	2	3	4	6	7	10	18

Maximum number of conductors in Schedule 80 PVC conduit

(Based on Table 1, Chapter 9 of the NEC)

Conductor Size AWG, MCM		Trade Size ½	¾	1	1¼	1½	2	2½	3	4	5
#14	THW	4	8	13	24	34	57	82	128		
	THHN	10	19	33	58	81	135	194	0		
12	THW	3	6	11	20	28	47	67	105	183	
	THHN	8	14	24	43	60	100	144	0		
10	THW	3	5	9	16	22	37	54	85	148	
	THHN	5	9	15	27	38	64	92	143		
8	THW	1	2	4	8	11	19	28	44	77	121
	THHN	1	4	7	13	18	31	45	70	123	195
6	THW	1	1	3	6	8	14	20	32	56	88
	THHN	1	3	5	9	13	22	32	50	88	140
4	THW	0	1	2	4	6	10	15	24	42	66
	THHN	1	1	3	6	8	13	20	31	54	86
3	THW	0	1	1	4	5	9	13	20	36	57
	THHN	1	1	2	5	7	11	17	26	46	73
2	THW	0	1	1	3	4	8	11	17	31	49
	THHN	1	1	1	4	5	9	14	22	38	61
1	THW	0	1	1	1	3	5	8	13	22	35
	THHN	0	1	1	3	4	7	10	16	28	45
0	THW	0	0	1	1	2	4	7	11	19	30
	THHN	0	1	1	2	3	6	8	13	24	38
00	THW	0	0	1	1	1	4	6	9	16	26
	THHN	0	1	1	1	3	5	7	11	20	32
000	THW	0	0	1	1	1	3	5	8	14	22
	THHN	0	0	1	1	2	4	6	9	16	26
0000	THW	0	0	1	1	1	3	4	6	11	18
	THHN	0	0	1	1	1	3	5	8	14	22
250	THW	0	0	0	1	1	1	3	5	9	14
	THHN	0	0	0	1	1	2	4	6	11	18
300	THW	0	0	0	1	1	1	3	4	8	13
	THHN	0	0	0	1	1	1	3	5	9	15
350	THW	0	0	0	1	1	1	2	4	7	11
	THHN	0	0	0	1	1	1	3	4	8	13
400	THW	0	0	0	0	1	1	1	3	6	10
	THHN	0	0	0	1	1	1	2	4	7	12
500	THW	0	0	0	0	1	1	1	3	5	8
	THHN	0	0	0	0	1	1	1	3	6	10
600	THW	0	0	0	0	0	1	1	1	4	7
	THHN	0	0	0	0	1	1	1	3	5	8
700	THW	0	0	0	0	0	1	1	1	3	6

Weight Comparison

Carlon Schedule 40® rigid nonmetallic conduit compared to other rigid conduit in pounds per 100 feet (approx.)

Nom. Size	Carlon Schedule 40® Rigid Nonmetallic Conduit	Carlon Schedule 80® Rigid Nonmetallic Conduit	Aluminum	Electrical Metallic Tubing (EMT)	Intermediate Metal Conduit (IMC)	Rigid Metal Conduit (RMC)
½	18	22	27	30	57	79
¾	23	29	36	46	78	105
1	35	43	53	66	112	153
1¼	48	60	70	96	114	201
1½	57	72	86	112	176	246
2	76	100	116	142	230	334
2½	125	153	183	230	393	527
3	164	212	239	270	483	690
3½	198		288	350	561	831
4	234	310	340	400	625	982
5	317	431	465	Not Made	Not Made	1344
6	412	592	612	Not Made	Not Made	1770

Corrosion Resistance of Carlon Schedule 40 and Schedule 80 PVC Conduit and Fittings

Carlon Schedule 40 and Schedule 80 are generally acceptable for use in environments containing the chemicals below. These environmental resistance ratings are based upon tests where the specimens were placed in complete submergence in the reagent listed. Schedule 40 and Schedule 80 can be used in many process areas where chemicals not on this list are manufactured or used because worker safety requirements dictate that any air presence or splashing be at a very low level.

If there are any questions for specific suitability in a given environment, prototype samples should be tested under actual conditions.

Acetic Acid 0-20%
Acetic Acid 20-30%
Acetic Acid 30-60%
Acetic Acid 60%
Acetic Acid – Glacial
Acetic Acid Vapors
Acetylene
Adipic Acid
Alum
Aluminum Chloride
Aluminum Fluoride
Aluminum Hydroxide
Aluminum Oxychloride
Aluminum Nitrate
Aluminum Sulfate
Ammonia-Dry Gas
Ammonium Bifluoride
Ammonium Carbonate
Ammonium Chloride
Ammonium Hydroxide 28%
Ammonium Metaphosphate
Ammonium Nitrate
Ammonium Persulfate
Ammonium Phosphate – Neutral
Ammonium Sulfate
Ammonium Sulfide
Ammonium Thiocyanate
Amyl Alcohol
Anthraquinone
Anthraquinonesulfonic Acid
Antimony Trichloride
Aqua Regia
Arsenic Acid 80%
Arylsulfonic Acid
Barium Carbonate
Barium Chloride
Barium Hydroxide
Barium Sulfate
Barium Sulfide
Beet – Sugar Liquor
Benzine Sulfonic Acid 10%
Benzoic Acid
Bismuth Carbonate
Black Liquor (Paper Industry)
Bleach – 12.5% Active Cl_2
Borax
Boric Acid
Brine
Breeder Pellets – Dane. Fish
Bromic Acid
Bromine – Water
Butane
Butadiene
Butyl Alcohol
Butyl Phenol
Butylene
Butyric Acid
Calcium Bisulfite
Calcium Carbonate
Calcium Chlorate
Calcium Chloride
Calcium Hydroxide
Calcium Hypochlorite
Calcium Nitrate
Calcium Sulfate
Carbonic Acid
Carbon Dioxide Gas – Wet
Carbon Dioxide – Aqueous Solution
Carbon Monoxide
Caustic Potash
Caustic Soda
Chloracetic Acid
Chloral Hydrate
Chlorine Gas (Dry)
Chlorine Gas (Moist)
Chlorine Water
Chlorosulfonic Acid
Chrome Alum
Chromic Acid 10%
Chromic Acid 20%
Chromic Acid 40%
Chromic Acid 50%
Citric Acid
Copper Chloride
Copper Cyanide
Copper Fluoride
Copper Nitrate
Copper Sulfate
Cottonseed Oil
Cresylic Acid 50%
Crude Oil – Sour
Crude Oil – Sweet
Demineralized Water
Dextrin
Dextrose
Diglycolic Acid
Disodium Phosphate
Ethyl Alcohol
Ethylene Glycol
Fatty Acids
Ferric Chloride
Ferric Nitrate
Ferric Sulfate
Ferrous Chloride
Ferrous Sulfate
Fluorine Gas – Wet
Fluorine Gas – Dry
Fluoroboric Acid
Fluorosilicic Acid
Formaldehyde
Formic Acid
Fructose
Gallic Acid
Gas – Coke Oven
Gas – Natural (Dry)
Gas – Natural (Wet)
Gasoline – Sour
Gasoline – Refined
Glucose
Glycerine (Glycerol)
Glycol
Glycolic Acid
Green Liquor (Paper Industry)
Heptane
Hexanol, Tertiary
Hydrobromic Acid 20%
Hydrochloric Acid 0% - 25%
Hydrochloric Acid 25% - 40%
Hydrocyanic Acid or Hydrogen Cyanide
Hydrofluoric Acid 10%
Hydrofluorosilicic Acid
Hydrogen Phosphide
Hydrogen Sulfide – Dry
Hydrogen Sulfide – Aqueous Solution
Hydroquinone
Hydroxylamine Sulfate
Iodine
Kerosene
Lactic Acid 28%
Lauric Acid
Lauryl Chloride
Lauryl Sulfate
Lead Acetate
Lime Sulfur
Linoleic Acid
Linseed Oil
Lubricating Oils
Magnesium Carbonate
Magnesium Chloride
Magnesium Hydroxide
Magnesium Nitrate
Magnesium Sulfate
Maleic Acid
Malic Acid
Mercuric Chloride
Mercuric Cyanide
Mercurous Nitrate
Mercury
Methyl Sulfate
Methylene Chloride
Mineral Oils
Naphthalene
Nickel Chloride
Nickel Nitrate
Nitric Acid, Anydrous
Nitric Acid 20%
Nitric Acid 40%
Nitric Acid 60%
Nitrobenzene
Nitrous Oxide
Oils and Fats
Oils – Petroleum – (See Type)
Oleic Acid
Oxalic Acid
Palmitic Acid 10%
Perchloric Acid 10%
Phenylhydrazine Hydrochloride
Phosgene, Gas
Phosphoric Acid – 0-25%
Phosphoric Acid – 25-50%
Phosphoric Acid – 50-85%
Photographic Chemicals
Plating Solutions
Potassium Bicarbonate
Potassium Bichromate
Potassium Borate
Potassium Bromide
Potassium Carbonate
Potassium Chloride
Potassium Chromate
Potassium Cyanide
Potassium Dichromate
Potassium Ferricyanide
Potassium Ferrocyanide
Potassium Fluoride
Potassium Hydroxide
Potassium Nitrate
Potassium Perborate
Potassium Perchlorite
Potassium Permanganate 10%
Potassium Persulfate
Potassium Sulfate
Propane
Propyl Alcohol
Silicic Acid
Silver Cyanide
Silver Nitrate
Silver Plating Solutions
Sodium Acetate
Sodium Arsenite
Sodium Benzoate
Sodium Bicarbonate
Sodium Bisulfate
Sodium Bisulfite
Sodium Bromide
Sodium Chlorate
Sodium Chloride
Sodium Cyanide
Sodium Dichromate
Sodium Ferricyanide
Sodium Ferrocyanide
Sodium Fluoride
Sodium Hydroxide
Sodium Hypochlorite
Sodium Nitrate
Sodium Nitrite
Sodium Sulfate
Sodium Sulfide
Sodium Sulfite
Sodium Thiosulfate (Hypo)
Stannic Chloride
Stannous Chloride
Stearic Acid
Sulfur
Sulfur Dioxide – Gas Dry
Sulfur Trioxide
Sulfuric Acid – 0-10%
Sulfuric Acid – 10-75%
Sulfuric Acid – 75-90%
Sulfurous Acid
Tannic Acid
Tanning Liquors
Tartaric Acid
Titanium Tetrachloride
Triethanolamine
Trimethyl Propane
Trisodium Phosphate
Turpentine
Urea
Vinegar
Whiskey
White Liquor (Paper Industry)
Wines
Zinc Chloride
Zinc Chromate
Zinc Cyanide
Zinc Nitrate
Zinc Sulfate

Ocal®

OCAL-BLUE Steel Conduit

- The conduit is PVC Coated Steel.
- Blue urethane coating over threads.
- A minimum .040" (40 mil) PVC coating on the exterior.
- A nominal .002" (2 mil) blue urethane on the interior.
- Color coded thread protectors.
- Couplings shipped with conduit are packaged separately.

THESE will BE
for CONDUITS
BELOW GRADE
MAKING TRANSITIONS
TO ABOVE GRADE
AND for EW 1, 2, 3, 4, 5
VAULT WORK.
AS PER DETAIL 4 (EZ)

OCAL-BLUE Conduit

Size Inches Metric Size Designator*	Outside Diameter Steel Only Inches Millimeters	Outside Diameter With PVC Inches Millimeters	Nominal Wall Thickness Steel Only Inches Millimeters	Nominal Wall Thickness With PVC Inches Millimeters	Nominal Inside Diameter Inches Millimeters	Cross Section Area in Square Inches Millimeters	Length Without Couplings Feet Meters	Minimum Weight Per Foot Pounds Kilograms
½ 16	.840 21.3	.920 23.3	.104 2.64	.144 3.556	.632 16.1	.304 7.72	9' 11¼" 3.03	.79 35.83
¾ 21	1.050 26.7	1.130 28.7	.107 2.71	2.71 3.73	.836 21.2	.533 13.53	9' 11¼" 3.03	1.05 47.63
1 27	1.315 33.4	1.395 35.4	.126 3.20	.166 4.21	1.063 27.0	.864 21.94	9' 11" 3.02	1.53 69.40
1¼ 35	1.660 42.2	1.740 44.1	.133 3.37	.173 4.39	1.394 35.4	1.495 37.97	9' 11" 3.02	2.01 91.17
1½ 41	1.900 48.3	1.980 50.2	.138 3.50	.178 4.52	1.624 41.2	2.036 51.71	9' 11" 3.02	2.40 112.95
2 53	2.375 60.3	2.455 62.3	.146 3.70	.186 4.72	2.083 52.9	3.355 85.21	9' 11" 3.02	3.32 150.60
2½ 63	2.875 73.0	2.955 75.0	.193 4.90	.233 5.91	2.489 63.2	4.788 121.61	9' 10½" 3.01	5.27 239.05
3 78	3.500 88.9	3.580 90.9	.205 5.20	.245 6.22	3.090 78.5	7.393 187.78	9' 10½" 3.01	6.83 309.63
3½ 91	4.000 101.6	4.080 103.6	.215 5.46	.255 6.47	3.57 90.7	9.866 250.59	9' 10¼" 3.00	8.31 376.94
4 103	4.500 114.3	4.580 116.3	.225 5.71	.265 6.73	4.05 102.9	12.730 323.34	9' 10¼" 3.00	9.73 441.04
5 129	5.563 141.3	5.643 143.3	.245 6.22	.285 7.23	5.073 128.9	20.006 508.15	9' 10" 3.00	13.14 595.85
6 155	6.625 168.3	6.705 170.3	.266 6.75	.306 .777	6.093 154.8	28.891 733.83	9' 10" 3.00	17.46 791.67

NOTE – Inches and Pounds indicated in bold face type
Metric measure is directly below bold face type
*Metric size designator (ANSI C80.1-1994)

Item	Size	Material	Color
COND	¾	____	-G

SA = Aluminum
Blank = Steel

-G = Gray
-R = Red
-W = White
-B = Blue
* Custom Colors Available

CSA CERTIFIED
File 110787

OCAL BLUE
OCAL INC. DIV. OF THOMAS & BETTS
UL LISTED
ELECTRICAL RIGID METAL CONDUIT
ISSUE NO. HH-6658
MADE IN U.S.A.

Thomas&Betts

Ocal®

OCAL-BLUE Couplings

- All couplings are coated with a nominal .002" (2 mil) blue urethane on the interior.
- A minimum .040" (40 mil) PVC coating is bonded to the exterior.
- Couplings have straight threads, not tapered.
- Molded ribs on outer coating.
- Couplings have pressure-sealing sleeves to protect the connection.

OCAL-BLUE Couplings

Coupling Size Inches Metric Size Designator*	Minimum Length of Metal Inches Millimeters	Total Minimum Length Including Sleeve Inches Millimeters	Weight in Pounds Kilograms
½ 16	1.500 38.1	3.7500 95.25	0.13 .058
¾ 21	1.532 38.91	3.7500 95.25	0.19 0.85
1 27	1.806 45.41	5.5000 139.70	0.33 .148
1¼ 35	1.906 48.41	5.5000 139.70	0.43 .193
1½ 41	1.906 48.41	5.7500 146.05	0.56 .252
2 53	1.937 49.19	5.9370 150.79	0.77 .346
2½ 63	2.878 73.10	6.8780 174.70	1.85 .832
3 78	3.031 76.98	7.0310 178.58	2.70 1.215
3½ 91	3.094 78.58	7.0940 180.18	3.78 1.701
4 103	3.188 80.97	7.1880 182.57	3.08 1.386
5 129	3.374 85.69	7.3740 187.29	5.00 2.250
6 155	3.457 87.29	7.4370 188.89	8.00 3.600

NOTE – Inches and Pounds indicated in bold face type
Metric measure is directly below bold face type
*Metric size designator (ANSI C80.1-1994).

Item	Size	Material	Color
CPL	¾		**-G**
		SA = Aluminum Blank = Steel	-G = Gray -R = Red -W = White -B = Blue * Custom Colors Available

Ocal®

OCAL-BLUE Elbows

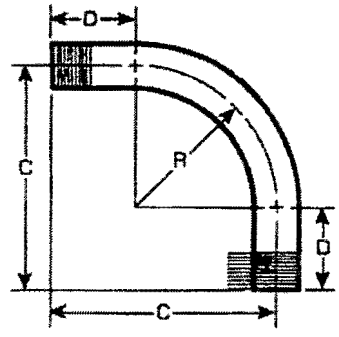

OCAL-BLUE Standard and Large Radius Elbows

OCAL-BLUE standard and large radius elbows are factory bent to reduce the time and wasted materials that can result from field bending.

- OCAL-BLUE elbows are fabricated from OCAL coated conduit.
- Standard radiuses in 30°, 45°, 60°, and 90° are available for immediate shipment.
- Special radiuses and degrees not listed are also available upon request.
- Color coded thread protectors.

Standard Radius Elbows

Size		Radius "R"		Offset "C"		Straight End "D"		Unbent Length		Weight Per Each	
Inches	Metric Size Designator*	Inches	Millimeters	Inches	Millimeters	Inches	Millimeters	Inches	Millimeters	Pounds	Kilograms
½	16	4.00	101.6	6.50	165.1	2.12	53.848	11.25	285.75	0.73	.331
¾	21	4.50	114.3	7.25	184.15	2.75	69.85	12.50	317.5	1.07	.485
1	27	5.75	146.05	8.63	219.202	2.88	73.152	14.75	374.65	1.93	.875
1¼	35	7.25	184.15	10.44	265.176	3.19	81.026	17.75	450.85	2.85	1.293
1½	41	8.25	209.55	11.63	295.402	3.38	84.785	19.75	501.65	4.26	1.932
2	53	9.50	241.3	13.31	338.074	3.81	96.774	22.50	571.5	6.50	2.948
2½	63	10.50	266.7	16.50	419.1	5.75	146.05	28.00	711.2	11.50	5.216
3	78	13.00	330.2	18.75	476.25	5.79	147.066	32.00	812.8	18.00	8.165
3½	91	15.00	381.0	22.96	583.184	7.96	202.184	39.50	1003.3	26.25	11.907
4	103	16.00	406.4	23.18	588.772	7.96	202.184	39.50	1003.3	32.00	14.515
5	129	24.00	609.6	34.90	835.66	10.90	276.86	59.50	1511.3	70.00	31.752
6	155	30.00	762.0	43.44	1103.376	14.40	365.76	76.00	1930.4	100.00	45.36

Large Radius Elbows

Size		Radius "R"		Offset "C"		Straight End "D"		Unbent Length	
Inches	Metric Size Designator*	Inches	Millimeters	Inches	Millimeters	Inches	Millimeters	Inches	Millimeters
1 - 2½" incl.	27 - 63	12	304.8	1' 9"	533.4	9"	228.6	3' 0"	914.4
1 - 3" incl.	27 - 78	15	381.0	2' 0"	609.6	9"	228.6	3' 6"	1066.8
1 - 4" incl.	27 - 103	18	457.2	2' 4"	711.2	10"	254.0	4' 0"	1219.2
1 - 5" incl.	27 - 129	24	609.6	2' 11"	889.0	11"	279.4	4' 11"	1498.6
1 - 6" incl.	27 - 155	30	762.0	3' 5"	1041.4	11"	279.4	5' 9"	1752.6
1 - 6" incl.	27 - 155	36	914.4	3' 11"	1193.8	11"	279.4	6' 6"	1981.2
1 - 6" incl.	27 - 155	42	1066.8	4' 6"	1371.6	12"	304.8	7' 6"	2285.0
1 - 6" incl.	27 - 155	48	1219.2	5' 0"	1524.0	12"	304.8	8' 6"	2590.8
2½ - 6" incl.	63 - 155	60	1524.0	6' 0"	1828.8	12"	304.8	9' 10"	2997.2

* Metric size designator (ANSI C80.1-1994)

Standard Radius

Item	Size	Degrees	Material	Color
ELL	¾			-G
		30 = 30° 45 = 45° 60 = 60° Blank = 90°	SA = Aluminum Blank = Steel	-G = Gray -R = Red -W = White -B = Blue * Custom Colors Available

Large Radius

Item	Conduit Size		Radius (Inches)		Degrees	Material	Color
LRELL	4	x	36	x			-G
					30 = 30° 45 = 45° 60 = 60° Blank = 90°	SA = Aluminum Blank = Steel	-G = Gray, -R = Red, -W = White, -B = Blue * Custom Colors Available

Thomas&Betts

Ocal

OCAL-BLUE Double-Coat GUA Series Conduit Bodies

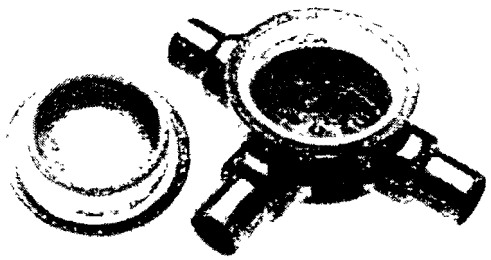

GUA series conduit bodies are installed within hazardous area locations to protect conductors in threaded rigid conduit, act as pull and splice boxes, provide access to conductors for maintenance and future system changes, act as mounting outlets for fixtures (with proper covers), or change conduit direction.

- Double coated with a nominal .002" (2 mil) blue urethane on both the interior and exterior, before PVC coating is applied.
- A minimum .040 (40 mil) PVC coating is bonded to the exterior.
- OCAL pressure-sealing sleeves on all threaded hubs.

Conduit Bodies

Conduit Size		Cover Opening	Type					
Inches	Metric Size Designator*		GUA	GUAC	GUAT	GUAX	GUAB	Cover Only
½	16	2	GUA14	GUAC14	GUAT14	GUAX14	GUAB14	GUA04
¾	21	2	GUA24	GUAC24	GUAT24	GUAX24	GUAB24	GUA04
½	16	3	GUA16	GUAC16	GUAT16	GUAX16	GUAB16	GUA06
¾	21	3	GUA26	GUAC26	GUAT26	GUAX26	GUAB26	GUA06
1	27	3	GUA36	GUAC36	GUAT36	GUAX36	GUAB36	GUA06
1	27	3⅜	–	–	GUAT37	GUAX37	–	GUA07
1¼	35	3⅜	GUA47	GUAC47	GUAT47	GUAX47	GUAB47	GUA07
1¼	35	5	–	GUAC49	GUAT49	GUAX49	–	GUA09
1½	41	5	GUA59	GUAC59	GUAT59	GUAX59	GUAB59	GUA09
2	53	5	–	GUAC69	GUAT69	GUAX69	GUAB69	GUA09

* Metric size designator (ANSI C80.1-1994).

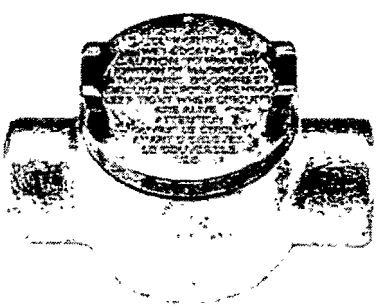

GUAC

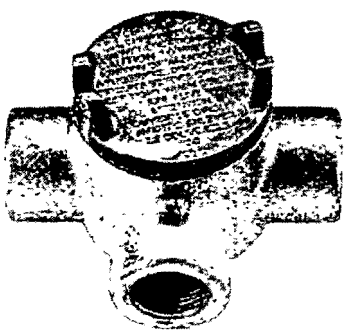

(Fittings shown uncoated)

GUAT

GUAX

Cat. No.	Color	Manufacturer
LB17	-G	

-G = Gray
-R = Red
-W = White
-B = Blue
* Custom Colors Available

Blank = T&B
1 = Other Manufacturer

Thomas&Betts

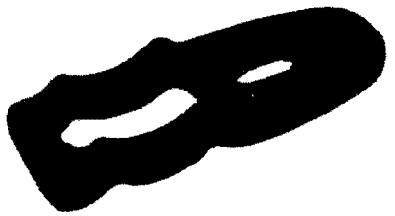

OCAL Clamp Back Spacers

- .040" (40 mil) PVC coating.
- Used with one-hole straps as spacers.

Clamp Back Spacers

Pipe Size		
Inches	Metric Size Designator*	Cat. No.
½	16	BACKCLAMP 1/2
¾	21	BACKCLAMP 3/4
1	27	BACKCLAMP1
1¼	35	BACKCLAMP1-1/4
1½	41	BACKCLAMP1-1/2
2	53	BACKCLAMP2
2½	63	BACKCLAMP2-1/2
3	78	BACKCLAMP3
3½	91	BACKCLAMP3-1/2
4	103	BACKCLAMP4

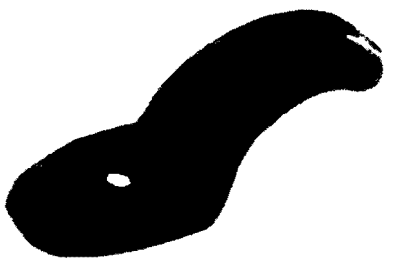

OCAL Pipe Straps

- .040" (40 mil) PVC coating.
- Sized to allow for the extra coating thickness
- Used to support OCAL-BLUE conduit on walls and structures.

Pipe Straps

Pipe Size			
Inches	Metric Size Designator*	One Hole Malleable	Two Hole Stamped
½	16	1HMS 1/2	2HS 1/2
¾	21	1HMS 3/4	2HS 3/4
1	27	1HMS1	2HS1
1¼	35	1HMS1-1/4	2HS1-1/4
1½	41	1HMS1-1/2	2HS1-1/2
2	53	1HMS2	2HS2
2½	63	1HMS2-1/2	2HS2-1/2
3	78	1HMS3	2HS3
3½	91	1HMS3-1/2	2HS3-1/2
4	103	1HMS4	2HS4

* Metric size designator (ANSI C80.1-1994).

Cat. No.	Color
BACKCLAMP1	-G

-G = Gray, -R = Red, -W = White, -B = Blue
* Custom Colors Available

OCAL-BLUE Double-Coat Hubs and Split Couplings

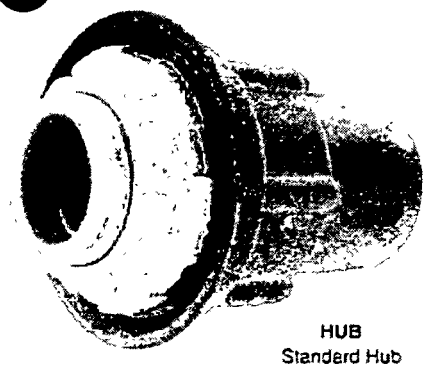

HUB
Standard Hub

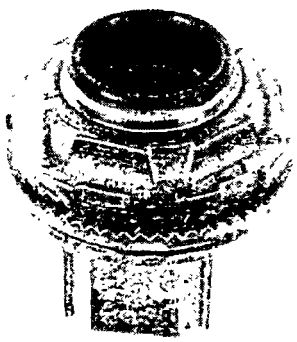

- *vative sealing ring and groove.*
- *gonal body and locknut design.*
- *Insulated throat.*
- *Sharper and deeper teeth.*

OCAL-BLUE Double-Coat Hubs

- Coated with a nominal .002" (2 mil) blue urethane on the interior, before PVC coating is applied.
- A minimum .040" (40 mil) PVC coating is bonded to the exterior.
- Pressure-sealing sleeves to protect the connection.

Knockout Hubs

Pipe Size		Hub	STG	STTB	STTTB
Inches	Metric Size Designator®	Cat. No.	Cat. No.	Cat. No.	Cat. No.
½	16	HUB1/2	STG1	STTB1	STTTB1
¾	21	HUB3/4	STG2	STTB2	STTTB2
1	27	HUB1	STG3	STTB3	STTTB3
1¼	35	HUB1-1/4	STG4	STTB4	STTTB4
1½	41	HUB1-1/2	STG5	STTB5	STTTB5
2	53	HUB2	STG6	STTB6	STTTB6
2½	63	HUB2-1/2	STG7	STTB7	–
3	78	HUB3	STG8	STTB8	–
3½	91	HUB3-1/2	STG9	STTB9	–
4	103	HUB4	STG10	STTB10	–
5	129	HUB5	STG11	STTB11	–
6	155	HUB6	STG12	STTB12	–

OCAL-BLUE Double-Coat Split Couplings

A split coupling is a speed union used to economically join two lengths of threaded conduit.

- Double coated with a nominal .002" (2 mil) blue urethane on both the interior and exterior, before PVC coating is applied.
- A minimum .040" (40 mil) PVC coating is bonded to the exterior.

TCC
Split Coupling

Split Couplings

Pipe Size		
Inches	Metric Size Designator*	Cat. No.
½	16	TCC1
¾	21	TCC2
1	27	TCC3
1¼	35	TCC4
1½	41	TCC5
2	53	TCC6
2½	63	TCC7
3	78	TCC8
3½	91	TCC9
4	103	TCC10
5	129	TCC12
6	155	TCC14

* Metric size designator (ANSI C80.1-1994).

Cat. No.	Color
HUB1	-G

-G = Gray, -R = Red, -W = White, -B = Blue
* Custom Colors Available

Ocal®

OCAL-BLUE Double-Coat Reducing Couplings

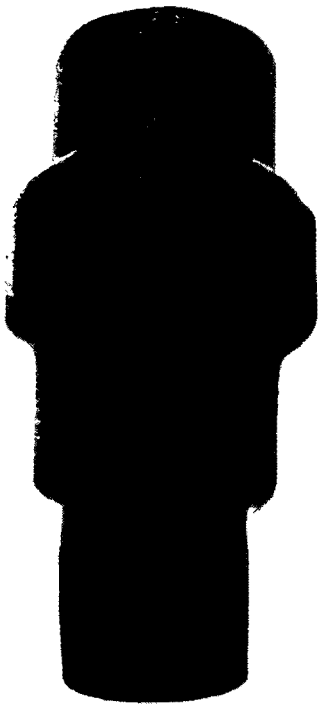

- Integral bushings in both ends to prevent damage to wires
- Funnel-shaped interior to guide wires from large to small conduit, making it easy to pull the wires.
- Double coated with a nominal .002" (2 mil) blue urethane on both the interior and exterior, before PVC coating is applied.
- A minimum .040" (40 mil) PVC coating is bonded to the exterior.
- Pressure-sealing sleeves to protect the connection.

Reducing Couplings

Pipe Size		Cat. No.
Inches	Metric Size Designator*	
⅜ - ½	21 - 16	REC21
1 - ½	27 - 16	REC31
1 - ¾	27 - 21	REC32
1¼ - ¾	35 - 21	REC42
1¼ - 1	35 - 27	REC43
1½ - ¾	41 - 21	REC52
1½ - 1	41 - 27	REC53
1½ - 1¼	41 - 35	REC54
2 - ¾	53 - 21	REC602
2 - 1	53 - 27	REC603
2 - 1¼	53 - 35	REC604
2 - 1½	53 - 41	REC605
2½ - 1½	63 - 41	REC75
3 - 2	78 - 53	REC86
3½ - 2½	91 - 63	REC97
4 - 3	103 - 78	REC108
5 - 4	129 - 103	REC01210

* Metric size designator (ANSI C80.1-1994)

Cat. No.	Color
REC21	-G

-G = Gray, -R = Red, -W = White, -B = Blue
* Custom Colors Available

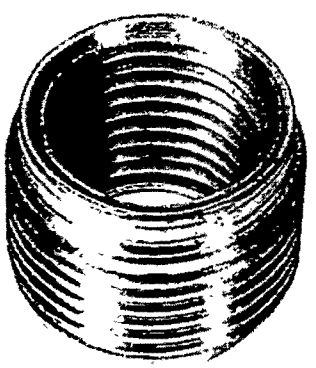

(Fitting shown uncoated)

Reducing Bushings – Urethane Coating Only

Cat. No.	A Male (NPT)	B Female (NPT)	Cat. No.	A Male (NPT)	B Female (NPT)
RE21-TB	¾	½	RE76-TB	2½	2
RE31-TB	1	½	RE83-TB	3	1
RE32-TB	1	¾	RE84-TB	3	1¼
RE41-TB	1¼	½	RE85-TB	3	1½
RE42-TB	1¼	¾	RE86-TB	3	2
RE43-TB	1¼	1	RE87-TB	3	2½
RE51-TB	1½	½	RE96-TB	3½	2
RE52-TB	1½	¾	RE97-TB	3½	2½
RE53-TB	1½	1	RE98-TB	4	3
RE54-TB	1½	1¼	RE106-TB	4	2
RE61-TB	2	½	RE107-TB	4	2½
RE62-TB	2	¾	RE108-TB	4	3
RE63-TB	2	1			
RE64-TB	2	1¼			
RE65-TB	2	1½			
RE73-TB	2½	1			
RE74-TB	2½	1¼			
RE75-TB	2½	1½			

PVC Coated
Pipe Strap

Cat. No.	Color
STRUTSTRAP1	-G

-G = Gray, -R = Red, -W = White, -B = Blue
* Custom Colors Available

PVC Coated Pipe Straps

Dimensions		
Inches	Metric Size Designator*	OCAL Cat. No.
½	16	STRUT STRAP 1/2
¾	21	STRUT STRAP 3/4
1	27	STRUT STRAP 1
1¼	35	STRUT STRAP 1-1/4
1½	41	STRUT STRAP 1-1/2
2	53	STRUT STRAP 2
2½	63	STRUT STRAP 2-1/2
3	78	STRUT STRAP 3
3½	91	STRUT STRAP 3-1/2
4	103	STRUT STRAP 4
5	129	STRUT STRAP 5

Stainless Steel
Pipe Strap

316 Stainless Steel Pipe Straps

Dimensions		
Inches	Metric Size Designator*	OCAL Cat. No.
½	16	STRUT STRAP 1/2SS
¾	21	STRUT STRAP 3/4SS
1	27	STRUT STRAP 1SS
1¼	35	STRUT STRAP 1-1/4SS
1½	41	STRUT STRAP 1-1/2SS
2	53	STRUT STRAP 2SS
2½	63	STRUT STRAP 2-1/2SS
3	78	STRUT STRAP 3SS
3½	91	STRUT STRAP 3-1/2SS
4	103	STRUT STRAP 4SS
5	129	STRUT STRAP 5SS

Hanger Rod Beam Clamp

Cat. No.	Color
500	-G

-G = Gray, -R = Red, -W = White, -B = Blue
* Custom Colors Available

Hanger Rod Beam Clamps

Jaw Opening Dimensions		Tapped Hole Dimensions		
Inches	Metric Size	Inches	Metric Size	Cat. No.
⅜	23.812	¼ - 20	6.350 - 20	500
⅞	22.225	⅜ - 16	7.937 - 16	501
1	25.400	⅜ - 16	9.525 - 16	502
1	25.400	½ - 13	12.700 - 13	503
2⅛	53.975	½ - 13	12.700 - 13	508

* Metric size designator (ANSI C80.1-1994).

Ocal®

Kopr-Shield™ Compound

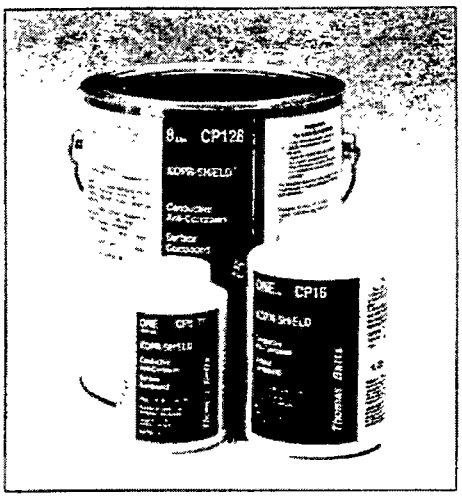

Kopr-Shield™ by Thomas & Betts meets the requirements of Section 300.6(A) in the 2002 NEC Code for Protection Against Corrosion.

"Where corrosion protection is necessary and the conduit is threaded in the field, the threads shall be coated with an approved electrically conductive, corrosion-resistant compound."

The Copper Colloidal Surface Treatment That Protects, Lubricates and Enhances Conductivity Between All Electrical Connections

Good connections are one of the most important aspects of electrical work. Mechanics know how much down-time is caused when fluids or oils leak into the raceway system or looking for a weak link in a ground system caused by a high resistance connection. Mechanics also know how much time is spent keeping contacts, switches, lugs and other connectors clean or replacing parts because of "green scourge" build-up. Thomas & Betts has the solution to improve connections made in thousands of electrical and raceway installations made each day by electricians everywhere.

Kopr-Shield™ compound is a unique homogenized blend of pure, polished colloidal copper, rust and corrosion inhibitors that simultaneously protects, lubricates and enhances the conductivity of the mating surfaces to which it is applied. Extremely adhesive, Kopr-Shield™ compound flows smoothly into uneven contours and voids, making application easy, protection and lubrication complete and positive. A stable compound, it will not settle-out, thin, thicken, harden, or dry out under the most severe environmental conditions.

Kopr-Shield™ Compound has excellent temperature characteristics – brushed on at -50F to 250F (other compounds either turn solid or run like water at these extremes). Even at 1800F, Kopr-Shield™ remains intact for short terms.

Kopr-Shield™ Compound may be used to advantage in all electrical installations. When the environment is hostile to good electrical and mechanical connections, Kopr-Shield™ Compound is a must!

Use Kopr-Shield™ Compound for Battery Lugs and Cables.

- Prevention of "Green Scourge" corrosion.
- Reduction of resistance.
- Ease of terminal installation and removal.

Use Kopr-Shield™ Compound for Raceways.

- Lubrication – Ease of assembly and disassemoly.
- Grounding Continuity Improved – Exceeds code requirements.

Use Kopr-Shield™ Compound for Fuse Clips.

- Even Heat Distribution – Elimination of hot spots.
- Oxidation Prevention – Prevents carbon path formation.
- Lubrication – Easy installation and removal of fuses.

Use Kopr-Shield™ Compound for Wiping Contacts, Drum Switches and Slip Rings.

- Prevention of galling, burning, pitting and discoloration.
- Suppression of arching and dissipation of coronas.
- Lubrication for ease of operation.

Kopr-Shield™

Cat. No.	Description	Std. Pkg.	Wt. Lbs./C
201-31879	1½ oz. Container with brush	96	11.46
201-31879-1	4 oz. Container with brush	24	38.54
CP8-TB	8 oz. Container with brush	12	64.58
CP16	16 oz. Container with brush	12	120.83
CP128	1 Gallon Can	4	952.00

Kopr-Shield™ is a product of Jet Lube, Inc.

Reprinted with permission from NFPA 70-1999, *National Electrical Code®*, Copyright © 1998, National Fire Protection Association, Quincy, MA 02269. This reprinted material is not the complete and official position of the NFPA on the referenced subject, which is represented only by the standard in its entirety.

National Electrical Code and NEC are registered trademarks of the National Fire Protection Association, Quincy, MA.

Ocal®

OCAL Patching Material

Ocal Touch Up Compounds

Item	Size
SPRAY CAN	12½ oz OCAL SPRAY
PATCH PINT	OCAL-PATCH (Brush on)
PATCH GALLON	OCAL-PATCH
INTERIOR PATCH-PINT	INTERIOR PATCH (Brush on)

Free! OCAL Installation Video

This free, 13-minute video gives you easy to follow instructions for clamping, cutting, threading, bending, and assembling coated conduit systems.*

*Also Available in Spanish.

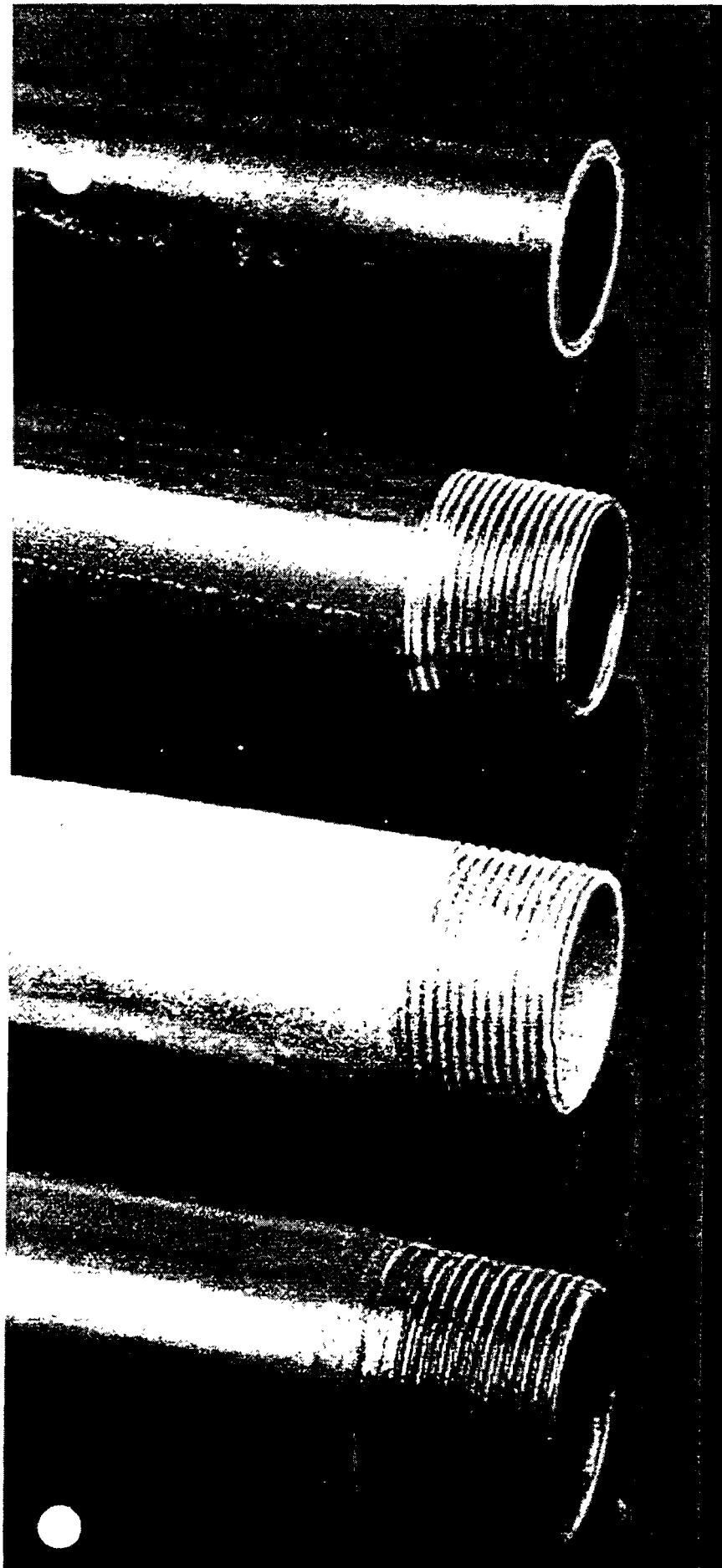

Ocal®

B

General Information . . . . . B2 - B4

OCAL-BLUE Steel Conduit B5

OCAL-BLUE Couplings B6

OCAL-BLUE Elbows B7
Standard Radius Elbows and
Large Radius Elbows

OCAL-BLUE Nipples B8
and Liquidtight Connectors

OCAL-BLUE Double-Coat B9
Conduit Bodies

OCAL-BLUE Double-Coat GUA Series B10-B11
Conduit Outlet Boxes
GUA, GUAB, GUAC, GUAD, GUAL
GUAM, GUAN, GUAT, GUAW, GUAX

Aluminum Outlet Boxes and Covers B12-B13
Hazardous Locations

OCAL-BLUE Double-Coat B14
Sealing Fittings
EYS, EYSX, EYD, EYDX, EZS, EZD

Double-Coat FS and FD Series Boxes B15

Double-Coat FS and FD Series Covers B16

OCAL Beam Clamps – U-Bolts B17

Straps – Clamp Back Spacers, Pipe Spacers. . . B18

OCAL-BLUE Double-Coat B19
Pulling Elbows and Mogul Fittings

OCAL-BLUE Double-Coat B20
Service Entrance and Malleable Elbows

OCAL-BLUE Double-Coat Hubs and B21
Split Couplings

OCAL-BLUE Double-Coat Unions B22

OCAL-BLUE Double-Coat
Reducing Couplings B23

Star Teck Extreme® B24

Sealing Compounds – Used for
Hazardous Locations B24

OCAL Channel and Accessories B25
PVC Coated Steel Strut
316 Stainless Steel Strut

Pipe Straps, Hanger Rod and B26-B27
Strut Accessories

Kopr-Shield™ Compound B28

OCAL Patching Material B29

OCAL Installation Tools B30
Manufactured By Rigid® Tool Co. B31-B32

Urethane Interior Coating Chemical B33
Resistance Chart

PVC Coating Chemical B34
Resistance Chart

NEMA Standards B35

NEC 310-16 . . . . . B36

NEC Table 8 . . . . . B37

OCAL-BLUE PVC Specifications B38

OCAL Recommended Installation
Procedures B39

Thomas&Betts

Ocal®

A Tradition of High Standards in Corrosion Protection

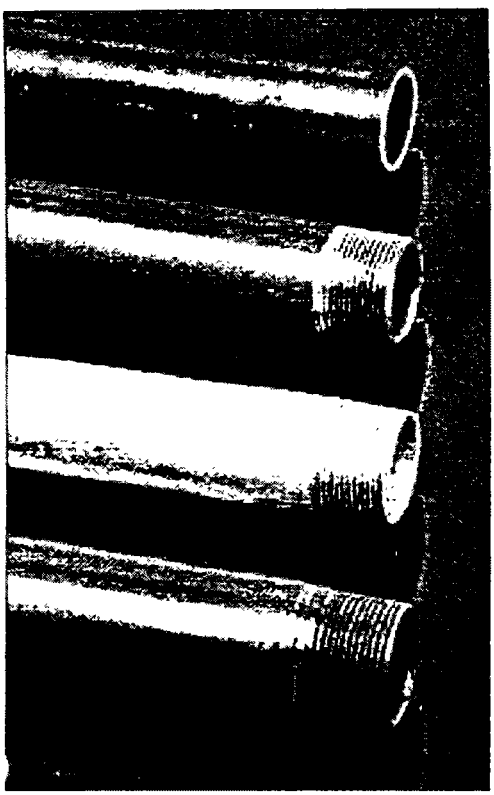

OCAL-BLUE PVC coated conduit for superior corrosion protection

Corrosive elements cause millions of dollars in damage through lost time, materials, and labor. For years, our industry has searched for an answer to this expensive problem. OCAL Inc. has the solution.

OCAL-BLUE coating is a complete and total protection package for your entire conduit system. By encapsulating the conduit, OCAL prevents corrosion from striking weak points in your system. OCAL-BLUE is a complete system with more than 2,500 varieties of fittings in stock, as well as corrosion-resistant supports, and patching compounds.

OCAL-BLUE conduit and fittings have set quality standards throughout the electrical industry for over 35 years. OCAL Inc. has achieved its outstanding reputation through careful attention to every step of the manufacturing process. OCAL is unique in the industry. We start with 100% American-made steel pipe, and then fabricate and galvanize the product in our own facilities, before applying the PVC coating.

We maintain total quality control throughout the production process.

Only OCAL meets NEMA RN-1-1989 standard 2.1 which reads, *"Where unusually corrosive elements require additional protection, it is recommended that threads be zinc coated with a hot dipped process or equivalent."*

Only OCAL **hot dip galvanizes the threads** before coating them with blue urethane for double protection. **Hot dipped galvanizing is the process through which the iron pipe is dipped in molten zinc causing the zinc to alloy with the iron at the surface.**

LISTED – With No Disclaimers
File E46453

CERTIFIED
File 110787

- ***Only OCAL-BLUE Conduit is U.L. Listed with both the zinc coating and the PVC coating investigated and listed per U.L. 6.***
- ***Only OCAL supplies PVC coated conduit with hot dipped galvanized threads.***
- ***Only OCAL supplies PVC coated conduit with a full undisturbed zinc coating under the PVC coating.***
- ***Only OCAL fulfills the requirements of U.L. 6 regarding undisturbed zinc coating over the conduit.***
- ***Only OCAL PVC coated conduit is UL Listed for UV resistance.***

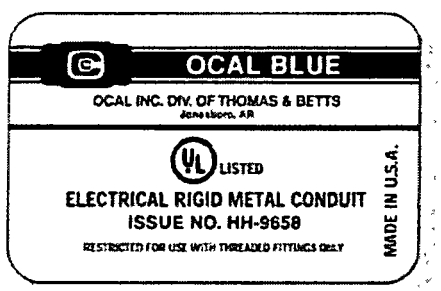

Thomas&Betts

© 2003 Thomas & Betts Corporation Specifications are subject to change without notice

Ocal®

Get the OCAL-BLUE Advantage

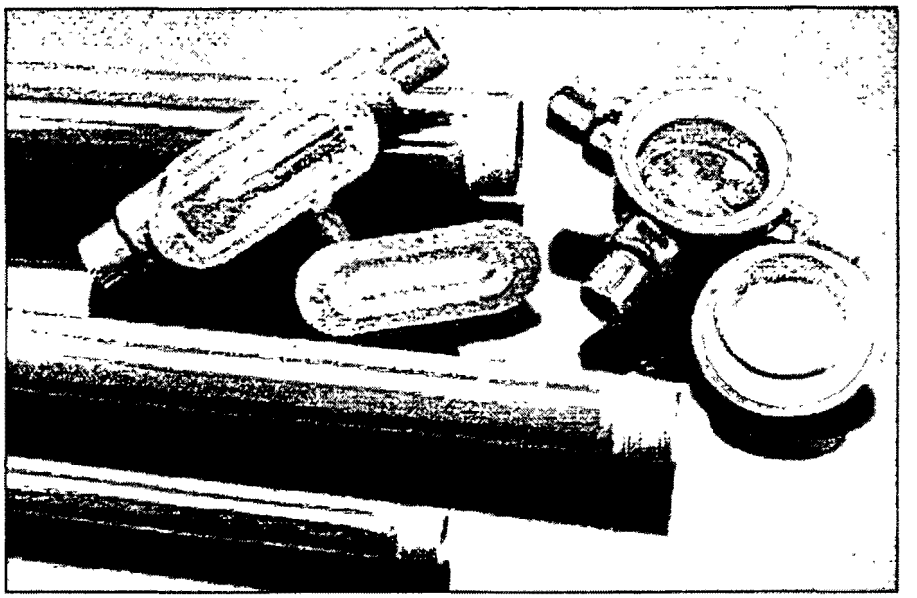

Specify OCAL-BLUE coating wherever the environment is corrosive OCAL-BLUE is a dense polyvinyl chloride coating with a minimum thickness of 0.04" (40 mil) on the exterior and a chemically-cured blue urethane coating with a nominal thickness of .002" (2 mil) on the interior and over the hot dipped galvanized threads.

Extra Corrosion Protection

OCAL-BLUE PVC coated conduit with blue urethane interior coating is the answer to internal corrosion.

We start by manufacturing the rigid conduit and do our special "Hot Dipped" galvanizing after fabrication, alloying the zinc with the steel. The galvanizing is done after threading, making the industry's only "Hot Dipped" galvanized threads to provide the extra protection you need.

Our PVC compounds are made from primary materials without the addition of fillers or secondary materials. The end result is sealing characteristics that outperform any other corrosion prevention system.

The strong bond between the PVC coating and the metal substrate prevents any migration of corrosion under the coating. Chemically cured urethane is baked on for a tough finish that will not chip, peel, or crack and is very flexible. The OCAL-BLUE system permits bending, threading, and cutting without loss of any sealing characteristics.

OCAL offers a full line of fittings, elbows, wireways, light fixtures, panel boards, and other electrical accessories coated with the OCAL-BLUE process.

OCAL-BLUE Coated Conduit and Double-Coated Fittings give you total corrosion protection in colors to meet your requirements.

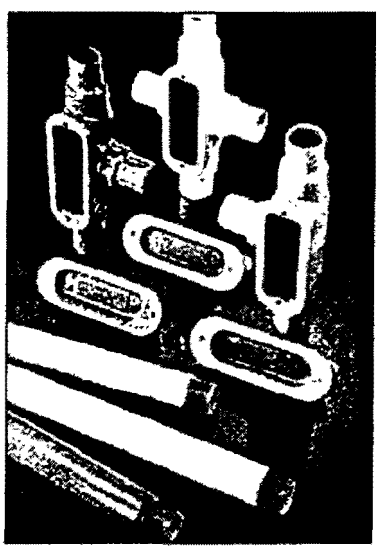

Specify OCAL-BLUE Coated Conduit and Fittings in the Following Applications:

- Chemical Plants
- Refineries
- Fertilizer Plants
- Steel Mills
- Pulp and Paper Mills
- Food and Dairy Facilities
- Offshore Platforms
- Cooling Towers
- Water and Waste Treatment Plants
- Pharmaceutical Facilities
- Breweries
- Salt Plants
- Electrical Substations
- Gas Transmission Lines
- And, many other corrosive environments

For Your Special Requirements

OCAL-BLUE PVC Coated Aluminum Conduit has the same corrosion protection qualities as regular OCAL-BLUE Conduit, except that it combines the OCAL-BLUE protection with lightweight copper-free aluminum conduit and fittings.

If color-coding is a requirement of your project, OCAL can produce all products in colors to meet your specifications.

Only OCAL manufactures its own PVC.
Only OCAL manufactures its own primer.

Many of the fittings OCAL coats are manufactured by Cooper Crouse-Hinds. However, OCAL also coats quality fittings from Thomas & Betts. If a specific manufacturer's product is required, please specify.

Thomas&Betts

© 2003 Thomas & Betts Corporation Specifications are subject to change without notice

Ocal®

For Complete Corrosion Protection, Trust OCAL-BLUE Double-Coat Coated Fittings

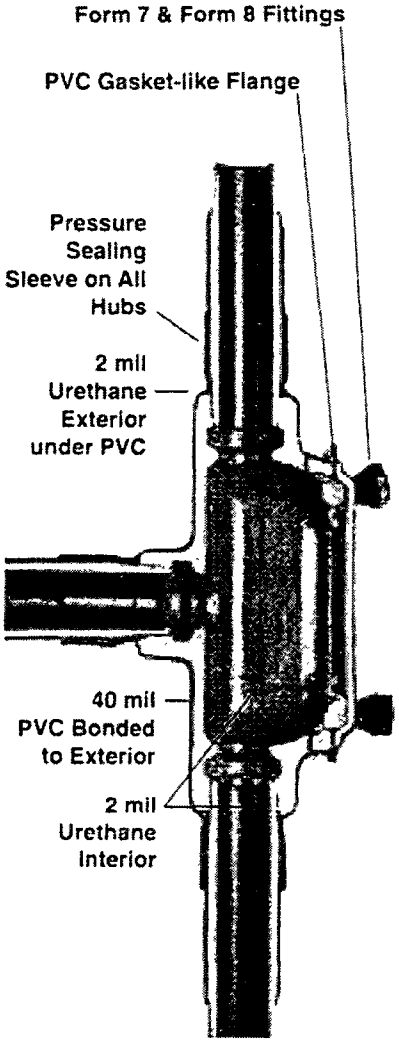

Only OCAL supplies encapsulated screws on both Form 7 & Form 8 fittings.

OCAL has developed a process for coating the interior and exterior of all fittings with a nominal .002" (2 mil) of blue urethane, which is baked on. (The curing process may cause a slight darkening of the blue urethane.)

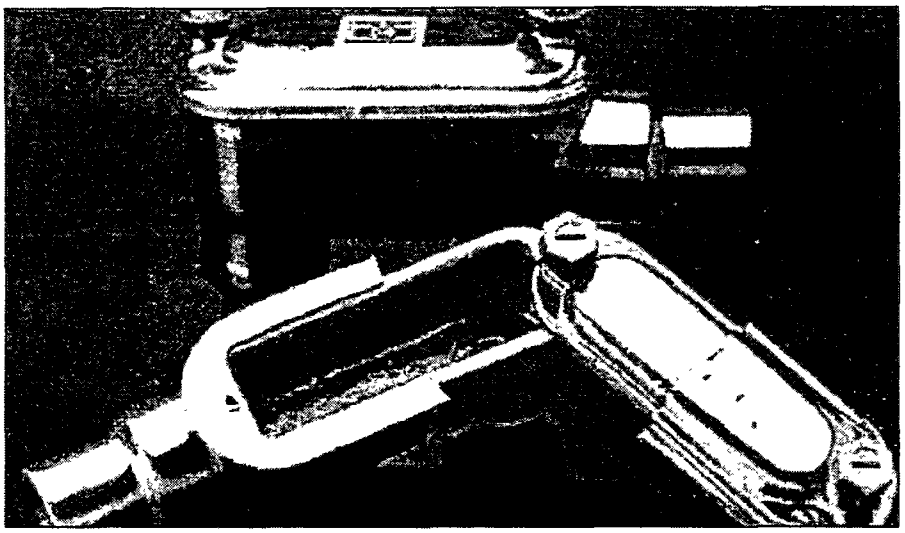

Superior Protection

This proprietary application of urethane enhances the corrosion protection of your system, even if you accidentally nick or cut the PVC coating during installation.

Flexible, overlapping sleeves on all OCAL fittings guarantee protection with a vapor- and moisture-tight seal at every connection.

Superior Service

Our reputation for dependability and customer service has made OCAL the most trusted name in corrosion protection for the electrical industry.

OCAL offers:

- Plant walkthroughs
- Installation training and certification
- Installation videos
- Installation tools
- The expertise to ensure that you get the maximum benefit of the OCAL-BLUE total protection system.
- For custom orders, special colors, or large quantities, OCAL's manufacturing capabilities guarantee delivery time unmatched in the industry.
- We protect each shipment with special packaging for damage-free delivery.

CSA CERTIFIED
File 110787

OCAL BLUE
OCAL INC. DIV. OF THOMAS & BETTS
Jonesboro, AR
UL LISTED
ELECTRICAL RIGID METAL CONDUIT
ISSUE NO. HH-9658
RESTRICTED FOR USE WITH THREADED FITTINGS ONLY.
MADE IN U.S.A.

Thomas&Betts

© 2003 Thomas & Betts Corporation Specifications are subject to change without notice. www.tnb.com

Ocal®

OCAL-BLUE Steel Conduit

- The conduit is PVC Coated Steel.
- Blue urethane coating over threads.
- A minimum .040" (40 mil) PVC coating on the exterior.
- A nominal .002" (2 mil) blue urethane on the interior.
- Color coded thread protectors.
- Couplings shipped with conduit are packaged separately.

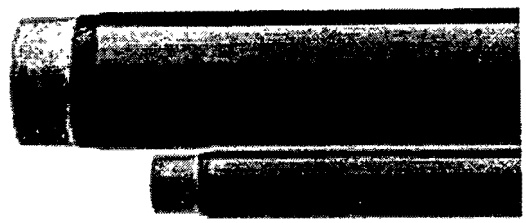

OCAL-BLUE Conduit

Size Inches Metric Size Designator*	Outside Diameter Steel Only Inches Millimeters	Outside Diameter With PVC Inches Millimeters	Nominal Wall Thickness Steel Only Inches Millimeters	Nominal Wall Thickness With PVC Inches Millimeters	Nominal Inside Diameter Inches Millimeters	Cross Section Area in Square Inches Millimeters	Length Without Couplings Feet Meters	Minimum Weight Per Foot Pounds Kilograms
½ 16	.840 21.3	.920 23 3	.104 2.64	.144 3.556	.632 16 1	.304 7.72	9' 11¼" 3.03	.79 35.83
¾ 21	1.050 26.7	1.130 28 7	.107 2.71	2.71 3.73	.836 21 2	.533 13.53	9' 11¼" 3.03	1.05 47.63
1 2/	1.315 33.4	1.395 35 4	.126 3.20	.166 4.21	1.063 27.0	.864 21.94	9' 11" 3.02	1.53 69.40
1¼ 35	1.660 42.2	1.740 44 1	.133 3.37	.173 4.39	1.394 35.4	1.495 37.97	9' 11" 3.02	2.01 91.17
1½ 41	1.900 48.3	1.980 50 2	.138 3.50	.178 4 52	1.624 41.2	2.036 51.71	9' 11" 3.02	2.40 112.95
2 53	2.375 60.3	2 455 62 3	.145 3.70	.186 4 72	2.083 52.9	3.355 85.21	9' 11" 3.02	3.32 150.60
2½ 63	2.875 73.0	2.955 75.0	.193 4.90	.233 5.91	2.489 63.2	4.788 121.61	9' 10½" 3.01	5.27 239.05
3 78	3.500 88 9	3.580 90.9	.205 5.20	.245 6.22	3.090 78.5	7.393 187.78	9' 10½" 3.01	6.83 309.63
3½ 91	4.000 101.6	4.080 103.6	.215 5.46	.255 6.47	3.57 90.7	9.866 250.59	9' 10¼" 3.00	8.31 376.94
4 103	4.500 114.3	4.580 116.3	.225 5 71	.265 6.73	4.05 102.9	12.730 323.34	9' 10¼" 3.00	9.73 441.04
5 129	5.563 141.3	5.643 143.3	.245 6.22	.285 7.23	5.073 128.9	20.006 508.15	9' 10" 3.00	13.14 595.85
6 155	6.625 168.3	6.705 170.3	.266 6.75	.306 .777	6.093 154.8	28.891 733.83	9' 10" 3.00	17.46 791.67

NOTE – Inches and Pounds indicated in bold face type
Metric measure is directly below bold face type
*Metric size designator (ANSI C80.1-1994)

Item	Size	Material	Color
COND	¾	____	**-G**
		SA = Aluminum Blank = Steel	-G = Gray -R = Red -W = White -B = Blue * Custom Colors Available

CSA CERTIFIED
File 110787

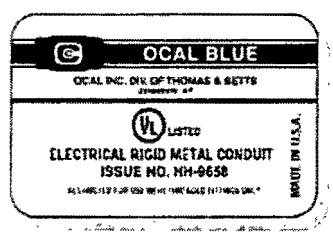

Thomas&Betts

© 2003 Thomas & Betts Corporation. Specifications are subject to change without notice.

Ocal®

OCAL-BLUE Couplings

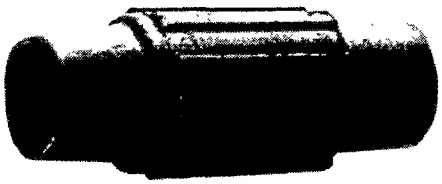

- All couplings are coated with a nominal .002" (2 mil) blue urethane on the interior.
- A minimum .040" (40 mil) PVC coating is bonded to the exterior.
- Couplings have straight threads, not tapered.
- Molded ribs on outer coating.
- Couplings have pressure-sealing sleeves to protect the connection.

OCAL-BLUE Couplings

Coupling Size **Inches** Metric Size Designator*	Minimum Length of Metal **Inches** Millimeters	Total Minimum Length Including Sleeve **Inches** Millimeters	Weight in **Pounds** Kilograms
½ 16	1.500 38.1	3.7500 95.25	0.13 .058
¾ 21	1.532 38.91	3.7500 95.25	0.19 0.86
1 27	1.906 48.41	4.9375 139.70	0.33 .148
1¼ 35	1.906 48.41	5.5000 139.70	0.43 .193
1½ 41	1.906 48.41	5.7500 146.05	0.56 .252
2 53	1.937 49.19	5.9370 150.79	0.77 .346
2½ 63	2.878 73.10	6.8780 174.70	1.85 .832
3 78	3.031 76.98	7.0310 178.58	2.70 1.215
3½ 91	3.094 78.58	7.0940 180.18	3.78 1.701
4 103	3.188 80.97	7.1880 182.57	3.08 1.386
5 129	3.374 85.69	7.3740 187.29	5.00 2.250
6 155	3.437 87.29	7.4370 188.89	8.00 3.600

NOTE – Inches and Pounds indicated in bold face type
Metric measure is directly below bold face type
*Metric size designator (ANSI C80.1-1994)

Item	Size	Material	Color
CPL	¾	____	**-G**
		SA = Aluminum Blank = Steel	-G = Gray -R = Red -W = White -B = Blue * Custom Colors Available

Thomas&Betts

© 2003 Thomas & Betts Corporation Specifications are subject to change without notice. www.tnb.com

Ocal®

OCAL-BLUE Elbows

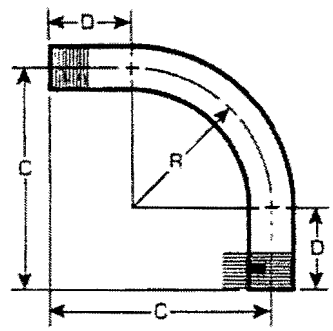

OCAL-BLUE Standard and Large Radius Elbows

OCAL-BLUE standard and large radius elbows are factory bent to reduce the time and wasted materials that can result from field bending.

- OCAL-BLUE elbows are fabricated from OCAL coated conduit.
- Standard radiuses in 30°, 45°, 60°, and 90° are available for immediate shipment.
- Special radiuses and degrees not listed are also available upon request.
- Color coded thread protectors.

Standard Radius Elbows

Size		Radius "R"		Offset "C"		Straight End "D"		Unbent Length		Weight Per Each	
Inches	Metric Size Designator*	Inches	Millimeters	Inches	Millimeters	Inches	Millimeters	Inches	Millimeters	Pounds	Kilograms
½	16	4.00	101.6	6.50	165.1	2.12	53.848	11.25	285.75	0.73	.331
¾	21	4.50	114.3	7.25	184.15	2.75	69.85	12.50	317.5	1.07	.485
1	27	5.75	146.05	8.63	219.202	2.88	73.152	14.75	374.65	1.93	.875
1¼	35	7.25	184.15	10.44	265.176	3.19	81.026	17.75	450.85	2.85	1.293
1½	41	8.25	209.55	11.63	295.402	3.38	84.785	19.75	501.65	4.26	1.932
2	53	9.50	241.3	13.31	338.074	3.81	96.774	22.50	571.5	6.50	2.948
2½	63	10.50	266.7	16.50	419.1	5.75	146.05	28.00	711.2	11.50	5.216
3	78	13.00	330.2	18.75	476.25	5.79	147.066	32.00	812.8	18.00	8.165
3½	91	15.00	381.0	22.96	583.184	7.96	202.184	39.50	1003.3	26.25	11.907
4	103	16.00	406.4	23.18	588.772	7.96	202.184	39.50	1003.3	32.00	14.515
5	129	24.00	609.6	34.90	835.66	10.90	276.86	59.50	1511.3	70.00	31.752
6	155	30.00	762.0	43.44	1103.376	14.40	365.76	76.00	1930.4	100.00	45.36

Large Radius Elbows

Size		Radius "R"		Offset "C"		Straight End "D"		Unbent Length	
Inches	Metric Size Designator*	Inches	Millimeters	Inches	Millimeters	Inches	Millimeters	Inches	Millimeters
1 - 2½" incl.	27 - 63	12	304.8	1' 9"	533.4	9"	228.6	3' 0"	914.4
1 - 3" incl.	27 - 78	15	381.0	2' 0"	609.6	9"	228.6	3' 6"	1066.8
1 - 4" incl.	27 - 103	18	457.2	2' 4"	711.2	10"	254.0	4' 0"	1219.2
1 - 5" incl.	27 - 129	24	609.6	2' 11"	889.0	11"	279.4	4' 11"	1498.6
1 - 6" incl.	27 - 155	30	762.0	3' 5"	1041.4	11"	279.4	5' 9"	1752.6
1 - 6" incl.	27 - 155	36	914.4	3' 11"	1193.8	11"	279.4	6' 6"	1981.2
1 - 6" incl.	27 - 155	42	1066.8	4' 6"	1371.6	12"	304.8	7' 6"	2286.0
1 - 6" incl.	27 - 155	48	1219.2	5' 0"	1524.0	12"	304.8	8' 6"	2590.8
2½ - 6" incl.	63 - 155	60	1524.0	6' 0"	1828.8	12"	304.8	9' 10"	2997.2

* Metric size designator (ANSI C80.1-1994)

Standard Radius

Item	Size	Degrees	Material	Color
ELL	¾			-G
		30 = 30° 45 = 45° 60 = 60° Blank = 90°	SA = Aluminum Blank = Steel	-G = Gray -R = Red -W = White -B = Blue * Custom Colors Available

Large Radius

Item	Conduit Size		Radius (Inches)		Degrees	Material	Color
LRELL	4	x	36	x			-G
					30 = 30° 45 = 45° 60 = 60° Blank = 90°	SA = Aluminum Blank = Steel	-G = Gray, -R = Red, -W = White, -B = Blue * Custom Colors Available

Thomas&Betts

© 2003 Thomas & Betts Corporation. Specifications are subject to change without notice.

Ocal®

OCAL-BLUE Double-Coat GUA Series Conduit Bodies

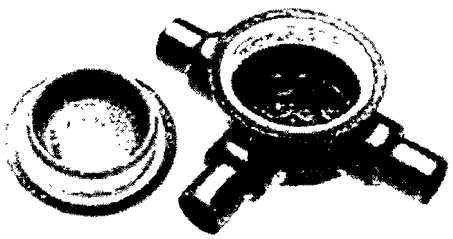

GUA series conduit bodies are installed within hazardous area locations to protect conductors in threaded rigid conduit, act as pull and splice boxes, provide access to conductors for maintenance and future system changes, act as mounting outlets for fixtures (with proper covers), or change conduit direction.

- Double coated with a nominal .002" (2 mil) blue urethane on both the interior and exterior, before PVC coating is applied.
- A minimum .040 (40 mil) PVC coating is bonded to the exterior.
- OCAL pressure-sealing sleeves on all threaded hubs.

Conduit Bodies

Conduit Size		Cover Opening	Type					
Inches	Metric Size Designator*		GUA	GUAC	GUAT	GUAX	GUAB	Cover Only
½	16	2	GUA14	GUAC14	GUAT14	GUAX14	GUAB14	GUA04
¾	21	2	GUA24	GUAC24	GUAT24	GUAX24	GUAB24	GUA04
½	16	3	GUA16	GUAC16	GUAT16	GUAX16	GUAB16	GUA06
¾	21	3	GUA26	GUAC26	GUAT26	GUAX26	GUAB26	GUA06
1	27	3	GUA36	GUAC36	GUAT36	GUAX36	GUAB36	GUA06
1	27	3½	–	–	GUAT37	GUAX37	–	GUA07
1¼	35	3½	GUA47	GUAC47	GUAT47	GUAX47	GUAB47	GUA07
1¼	35	5	–	GUAC49	GUAT49	GUAX49	–	GUA09
1½	41	5	GUA59	GUAC59	GUAT59	GUAX59	GUAB59	GUA09
2	53	5	–	GUAC69	GUAT69	GUAX69	GUAB69	GUA09

* Metric size designator (ANSI C80.1-1994).

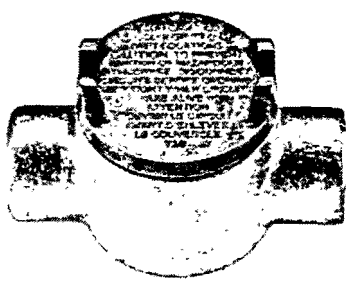

GUAC

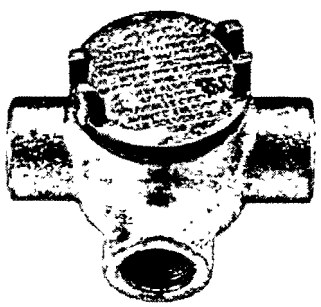

(Fittings shown uncoated)

GUAT

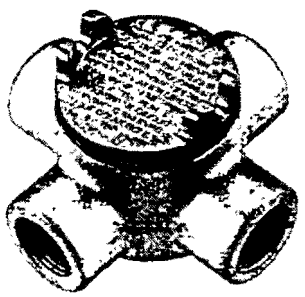

GUAX

Cat. No.	Color	Manufacturer
LB17	-G	

-G = Gray
-R = Red
-W = White
-B = Blue
* Custom Colors Available

Blank = T&B
1 = Other Manufacturer

Thomas&Betts

© 2003 Thomas & Betts Corporation. Specifications are subject to change without notice. www.tnb.com

OCAL Clamp Back Spacers

- .040" (40 mil) PVC coating.
- Used with one-hole straps as spacers.

Clamp Back Spacers

Pipe Size		
Inches	Metric Size Designator*	Cat. No.
½	16	BACKCLAMP 1/2
¾	21	BACKCLAMP 3/4
1	27	BACKCLAMP1
1¼	35	BACKCLAMP1-1/4
1½	41	BACKCLAMP1-1/2
2	53	BACKCLAMP2
2½	63	BACKCLAMP2-1/2
3	78	BACKCLAMP3
3½	91	BACKCLAMP3-1/2
4	103	BACKCLAMP4

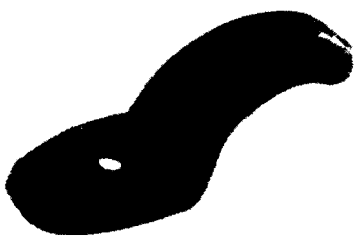

OCAL Pipe Straps

- .040" (40 mil) PVC coating.
- Sized to allow for the extra coating thickness.
- Used to support OCAL-BLUE conduit on walls and structures.

Pipe Straps

Pipe Size			
Inches	Metric Size Designator*	One Hole Malleable	Two Hole Stamped
½	16	1HMS 1/2	2HS 1/2
¾	21	1HMS 3/4	2HS 3/4
1	27	1HMS1	2HS1
1¼	35	1HMS1-1/4	2HS1-1/4
1½	41	1HMS1-1/2	2HS1-1/2
2	53	1HMS2	2HS2
2½	63	1HMS2-1/2	2HS2-1/2
3	78	1HMS3	2HS3
3½	91	1HMS3-1/2	2HS3-1/2
4	103	1HMS4	2HS4

* Metric size designator (ASTM C80.1-1994).

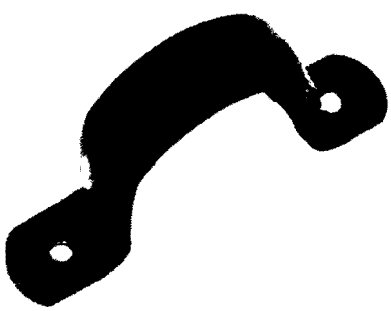

Cat. No.	Color
BACKCLAMP1	**-G**

-G = Gray, -R = Red, -W = White, -B = Blue
* Custom Colors Available

Thomas&Betts

© 2003 Thomas & Betts Corporation. Specifications are subject to change without notice. www.tnb.com

Ocal®

OCAL-BLUE Double-Coat Hubs and Split Couplings

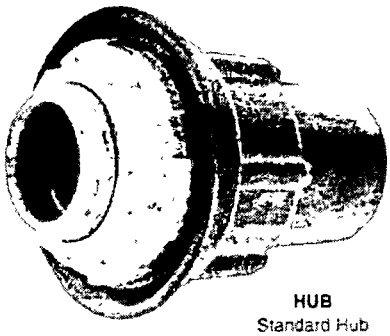

HUB
Standard Hub

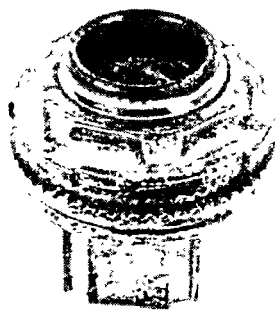

- *Innovative sealing ring and groove.*
- *Hexagonal body and locknut design.*
- *Insulated throat.*
- *Sharper and deeper teeth.*

OCAL-BLUE Double-Coat Hubs

- Coated with a nominal .002" (2 mil) blue urethane on the interior, before PVC coating is applied.
- A minimum .040" (40 mil) PVC coating is bonded to the exterior.
- Pressure-sealing sleeves to protect the connection.

Knockout Hubs

Pipe Size		Hub	STG	STTB	STTTB
Inches	Metric Size Designator8	Cat. No.	Cat. No.	Cat. No.	Cat. No.
½	16	HUB1/2	STG1	STTB1	STTTB1
¾	21	HUB3/4	STG2	STTB2	STTTB2
1	27	HUB1	STG3	STTB3	STTTB3
1¼	35	HUB1-1/4	STG4	STTB4	STTTB4
1½	41	HUB1-1/2	STG5	STTB5	STTTB5
2	53	HUB2	STG6	STTB6	STTTB6
2½	63	HUB2-1/2	STG7	STTB7	–
3	78	HUB3	STG8	STTB8	–
3½	91	HUB3-1/2	STG9	STTB9	–
4	103	HUB4	STG10	STTB10	–
5	129	HUB5	STG11	STTB11	–
6	155	HUB6	STG12	STTB12	–

OCAL-BLUE Double-Coat Split Couplings

A split coupling is a speed union used to economically join two lengths of threaded conduit.

- Double coated with a nominal .002" (2 mil) blue urethane on both the interior and exterior, before PVC coating is applied.
- A minimum .040" (40 mil) PVC coating is bonded to the exterior.

TCC
Split Coupling

Split Couplings

Pipe Size		
Inches	Metric Size Designator*	Cat. No.
½	16	TCC1
¾	21	TCC2
1	27	TCC3
1¼	35	TCC4
1½	41	TCC5
2	53	TCC6
2½	63	TCC7
3	78	TCC8
3½	91	TCC9
4	103	TCC10
5	129	TCC12
6	155	TCC14

* Metric size designator (ANSI C80.1-1994)

Cat. No.	Color
HUB1	**-G**

-G = Gray, -R = Red, -W = White, -B = Blue
* Custom Colors Available

Thomas&Betts

© 2003 Thomas & Betts Corporation. Specifications are subject to change without notice.

OCAL-BLUE Double-Coat Reducing Couplings

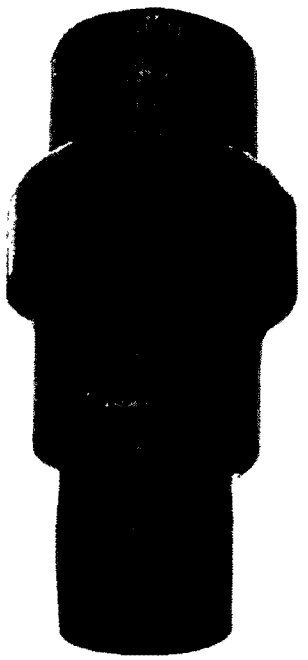

- Integral bushings in both ends to prevent damage to wires.
- Funnel-shaped interior to guide wires from large to small conduit, making it easy to pull the wires.
- Double coated with a nominal .002" (2 mil) blue urethane on both the interior and exterior, before PVC coating is applied.
- A minimum .040" (40 mil) PVC coating is bonded to the exterior.
- Pressure-sealing sleeves to protect the connection.

Cat. No.	Color
REC21	**-G**

-G = Gray, -R = Red, -W = White, -B = Blue
* Custom Colors Available

Reducing Couplings

Pipe Size		Cat. No.
Inches	Metric Size Designator*	
¾ - ½	21 - 16	REC21
1 - ½	27 - 16	REC31
1 - ¾	27 - 21	REC32
1¼ - ¾	35 - 21	REC42
1¼ - 1	35 - 27	REC43
1½ - ¾	41 - 21	REC52
1½ - 1	41 - 27	REC53
1½ - 1¼	41 - 35	REC54
2 - ¾	53 - 21	REC602
2 - 1	53 - 27	REC603
2 - 1¼	53 - 35	REC604
2 - 1½	53 - 41	REC605
2½ - 1½	63 - 41	REC75
3 - 2	78 - 53	REC86
3½ - 2½	91 - 63	REC97
4 - 3	103 - 78	REC108
5 - 4	129 - 103	REC01210

* Metric size designator (ANSI C80.1-1994)

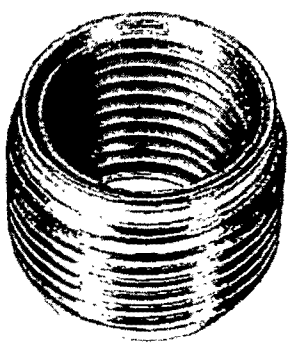

(Fitting shown uncoated)

Reducing Bushings – Urethane Coating Only

Cat. No.	A Male (NPT)	B Female (NPT)
RE21-TB	¾	½
RE31-TB	1	½
RE32-TB	1	¾
RE41-TB	1¼	½
RE42-TB	1¼	¾
RE43-TB	1¼	1
RE51-TB	1½	½
RE52-TB	1½	¾
RE53-TB	1½	1
RE54-TB	1½	1¼
RE61-TB	2	½
RE62-TB	2	¾
RE63-TB	2	1
RE64-TB	2	1¼
RE65-TB	2	1½
RE73-TB	2½	1
RE74-TB	2½	1¼
RE75-TB	2½	1½

Cat. No.	A Male (NPT)	B Female (NPT)
RE76-TB	2½	2
RE83-TB	3	1
RE84-TB	3	1¼
RE85-TB	3	1½
RE86-TB	3	2
RE87-TB	3	2½
RE96-TB	3½	2
RE97-TB	3½	2½
RE98-TB	4	3
RE106-TB	4	2
RE107-TB	4	2½
RE108-TB	4	3

Thomas&Betts

© 2003 Thomas & Betts Corporation. Specifications are subject to change without notice. www.tnb.com

Ocal®

Pipe Straps, Hanger Rod And Strut Accessories

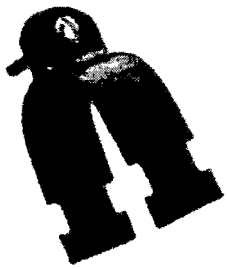

PVC Coated
Pipe Strap

Cat. No.	Color
STRUTSTRAP1	-G

-G = Gray, -R = Red, -W = White, -B = Blue
* Custom Colors Available

PVC Coated Pipe Straps

Dimensions		
Inches	Metric Size Designator*	OCAL Cat. No.
½	16	STRUT STRAP 1/2
¾	21	STRUT STRAP 3/4
1	27	STRUT STRAP 1
1¼	35	STRUT STRAP 1-1/4
1½	41	STRUT STRAP 1-1/2
2	53	STRUT STRAP 2
2½	63	STRUT STRAP 2-1/2
3	78	STRUT STRAP 3
3½	91	STRUT STRAP 3-1/2
4	103	STRUT STRAP 4
5	129	STRUT STRAP 5

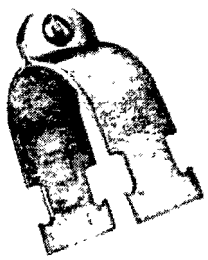

Stainless Steel
Pipe Strap

316 Stainless Steel Pipe Straps

Dimensions		
Inches	Metric Size Designator*	OCAL Cat. No.
½	16	STRUT STRAP 1/2SS
¾	21	STRUT STRAP 3/4SS
1	27	STRUT STRAP 1SS
1¼	35	STRUT STRAP 1-1/4SS
1½	41	STRUT STRAP 1-1/2SS
2	53	STRUT STRAP 2SS
2½	63	STRUT STRAP 2-1/2SS
3	78	STRUT STRAP 3SS
3½	91	STRUT STRAP 3-1/2SS
4	103	STRUT STRAP 4SS
5	129	STRUT STRAP 5SS

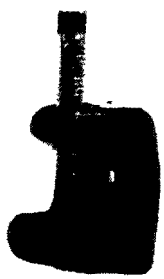

Hanger Rod Beam Clamp

Cat. No.	Color
500	-G

-G = Gray, -R = Red, -W = White, -B = Blue
* Custom Colors Available

Hanger Rod Beam Clamps

Jaw Opening Dimensions		Tapped Hole Dimensions		
Inches	Metric Size	Inches	Metric Size	Cat. No.
9/16	23.812	¼ - 20	6.350 - 20	500
⅜	22.225	5/16 - 18	7.937 - 18	501
1	25.400	⅜ - 16	9.525 - 16	502
1	25.400	½ - 13	12.700 - 13	503
2⅛	53.975	½ - 13	12.700 - 13	508

* Metric size designator (ANSI C80.1-1994)

Thomas&Betts

© 2003 Thomas & Betts Corporation Specifications are subject to change without notice

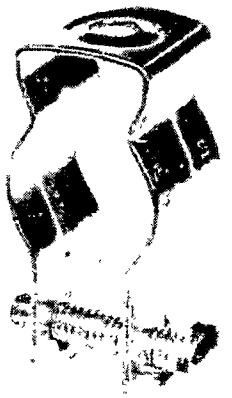

Mini Type Conduit Hangers (Includes Bolts)

Pipe Size		Cat. No.
Inches	Metric Size Designator*	
½	16	MIN1/2
¾	21	MIN3/4
1	27	MIN1
1¼	35	MIN1-1/4
1½	41	MIN1-1/2
2	53	MIN2
2½	63	MIN2-1/2
3	78	MIN3
3½	91	MIN3-1/2
4	103	MIN4

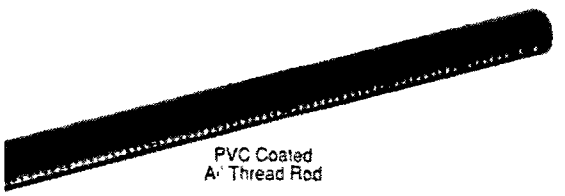

PVC Coated
All Thread Rod

Cat. No.	Color
THR3-8X3	-G

G = Gray, R = Red, W = White, B = Blue
* Custom Colors Available

PVC Coated Steel All Thread Rod

Pipe Size		Cat. No.
Inches	Metric Size Designator*	
⅜ x 3	9.525 x 76.200	THR3-8X3
⅜ x 6	9.525 x 152.400	THR3-8X6
⅜ x 10	9.525 x 254.000	THR3-8X10
½ x 3	12.700 x 76.200	THR1-2X3
½ x 6	12.700 x 152.400	THR1-2X6
½ x 10	12.700 x 254.00	THR1-2X10

PVC Coated Kindorf® Channel and Struts are available upon request

Stainless Steel
All Thread Rod

Stainless Steel All Thread Rod

Pipe Size		Cat. No.
Inches	Metric Size Designator*	
½ x 3	12.700 x 76.200	THR1-2X3SS
½ x 6	12.700 x 152.400	THR1-2X6SS
½ x 10	12.700 x 254.00	THR1-2X10SS

PVC Coated Kindorf® Channel and Struts are available upon request
* Metric size designator (ANSI C80.1-1994)

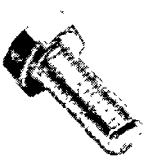

E-142
Hex Head Cap Screw

316 Stainless Steel Accessories

Cat. No.	Description
E-142SS	Hex Head Cap Screw
E-145SS	Standard Hex Nut
EF-147SS	Fender Washer
H-119SS	Rod Coupling

E-145
Standard Hex Nut

EF-147
Fender Washer

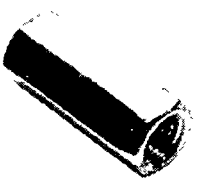

H-119
Rod Coupling

Thomas&Betts

©2003 Thomas & Betts Corporation. Specifications are subject to change without notice.

Ocal®

Kopr-Shield™ Compound

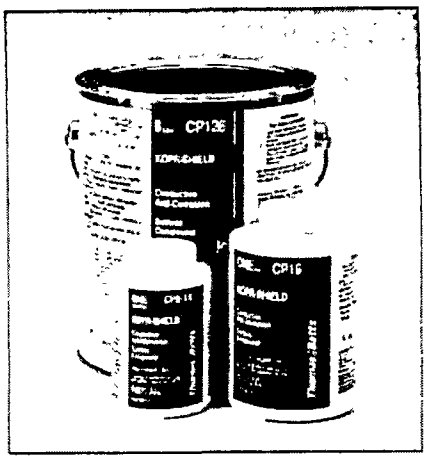

Kopr-Shield™ by Thomas & Betts meets the requirements of Section 300.6(A) in the 2002 NEC Code for Protection Against Corrosion.

"Where corrosion protection is necessary and the conduit is threaded in the field, the threads shall be coated with an approved electrically conductive, corrosion-resistant compound."

The Copper Colloidal Surface Treatment That Protects, Lubricates and Enhances Conductivity Between All Electrical Connections

Good connections are one of the most important aspects of electrical work. Mechanics know how much down-time is caused when fluids or oils leak into the raceway system or looking for a weak link in a ground system caused by a high resistance connection. Mechanics also know how much time is spent keeping contacts, switches, lugs and other connectors clean or replacing parts because of "green scourge" build-up. Thomas & Betts has the solution to improve connections made in thousands of electrical and raceway installations made each day by electricians everywhere.

Kopr-Shield™ compound is a unique homogenized blend of pure, polished colloidal copper, rust and corrosion inhibitors that simultaneously protects, lubricates and enhances the conductivity of the mating surfaces to which it is applied. Extremely adhesive, Kopr-Shield™ compound flows smoothly into uneven contours and voids, making application easy, protection and lubrication complete and positive. A stable compound, it will not settle-out, thin, thicken, harden, or dry out under the most severe environmental conditions.

Kopr-Shield™ Compound has excellent temperature characteristics – brushed on at –50F to 250F (other compounds either turn solid or run like water at these extremes). Even at 1800F, Kopr-Shield™ remains intact for short terms.

Kopr-Shield™ Compound may be used to advantage in all electrical installations. When the environment is hostile to good electrical and mechanical connections, Kopr-Shield™ Compound is a must!

Use Kopr-Shield™ Compound for Battery Lugs and Cables.

- Prevention of "Green Scourge" corrosion
- Reduction of resistance.
- Ease of terminal installation and removal.

Use Kopr-Shield™ Compound for Raceways.

- Lubrication – Ease of assembly and disassembly.
- Grounding Continuity Improved – Exceeds code requirements

Use Kopr-Shield™ Compound for Fuse Clips.

- Even Heat Distribution – Elimination of hot spots.
- Oxidation Prevention – Prevents carbon path formation.
- Lubrication – Easy installation and removal of fuses.

Use Kopr-Shield™ Compound for Wiping Contacts, Drum Switches and Slip Rings.

- Prevention of galling, burning, pitting and discoloration.
- Suppression of arching and dissipation of coronas
- Lubrication for ease of operation

Kopr-Shield™

Cat. No.	Description	Std. Pkg.	Wt. Lbs./C
201-31879	1½ oz. Container with brush	96	11.46
201-31879-1	4 oz. Container with brush	24	36.54
CP8-TB	8 oz. Container with brush	12	64.58
CP16	16 oz. Container with brush	12	120.83
CP128	1 Gallon Can	4	952.00

Kopr-Shield™ is a product of Jet Lube Inc.

Reprinted with permission from NFPA 70-1999, *National Electrical Code*®, Copyright © 1998, National Fire Protection Association, Quincy, MA 02269. This reprinted material is not the complete and official position of the NFPA on the referenced subject, which is represented only by the standard in its entirety.
National Electrical Code and NEC are registered trademarks of the National Fire Protection Association, Quincy, MA.

Thomas&Betts

© 2003 Thomas & Betts Corporation. Specifications are subject to change without notice.

Ocal®

OCAL Patching Material

Ocal Touch Up Compounds

Item	Size
SPRAY CAN	12½ oz OCAL SPRAY
PATCH PINT	OCAL-PATCH (Brush on)
PATCH GALLON	OCAL-PATCH
INTERIOR PATCH-PINT	INTERIOR PATCH (Brush on)

Free! OCAL Installation Video

This free, 13-minute video gives you easy to follow instructions for clamping, cutting, threading, bending, and assembling coated conduit systems.*

*Also Available in Spanish.

Thomas&Betts

© 2003 Thomas & Betts Corporation Specifications are subject to change without notice. www.tnb.com

Ocal®

Urethane Interior Coating Chemical Resistance Chart

Solutions	Conc.	Temp.	Recommended Exposure		
			Splashing	Liquid	Fumes
Acetic Acid	10%	75	yes	no	yes
Acid Copper Plating Solution	Any	75	yes	no	yes
Alkaline Cleaners	Any	75	yes	no	yes
Aluminum Chloride	Sat'd	75	yes	no	yes
Aluminum Sulfate	Sat'd	75	yes	no	yes
Alums	Sat'd	75	yes	no	yes
Ammonium Chloride	Sat'd	75	yes	no	yes
Ammonium Hydroxide	28%	75	yes	no	yes
Ammonium Hydroxide	10%	75	yes	no	yes
Ammonium Sulfate	Sat'd	75	yes	no	yes
Ammonium Thiocyanate	Sat'd	75	yes	no	yes
Amyl Alcohol	Any	75	yes	yes	yes
Arsenic Acids	Any	75	yes	no	yes
Barium Sulfide	Sat'd	75	yes	no	yes
Black Liquor	Sat'd	75	yes	no	yes
Benzoic Acid	Sat'd	75	yes	no	yes
Brass Plating Solution	Any	75	yes	no	yes
Bromine Water	Sat'd	75	yes	no	yes
Butyl Alcohol	Any	75	yes	no	yes
Cadmium Plating Solution	Any	75	yes	no	yes
Calcium Bisulfite	Any	75	yes	no	yes
Calcium Chloride	Sat'd	75	yes	no	yes
Calcium Hypochlorite	Sat'd	75	yes	no	yes
Carbonic Acid	Sat'd	75	yes	no	yes
Casein	Sat'd	75	yes	no	yes
Castor Oil	Any	75	yes	yes	yes
Caustic Soda	35%	75	yes	no	yes
Caustic Soda	10%	75	yes	no	yes
Caustic Potash	35%	75	yes	no	yes
Caustic Potash	10%	75	yes	no	yes
Chlorine Water	Sat'd	75	yes	no	yes
Chromium Plating Solution	Any	75	yes	no	yes
Citric Acid	Sat'd	75	yes	no	yes
Copper Chloride (Cupric)	Sat'd	75	yes	no	yes
Copper Cyanide Plating Sol	Any	75	yes	no	yes
(High Speed)	Any	75	yes	no	yes
(with Alkali Cyanides)	Sat'd	75	yes	no	yes
Copper Sulfate	Sat'd	75	yes	no	yes
Cocoanut Oil	Sat'd	75	yes	yes	yes
Cottonseed Oil	Sat'd	75	yes	yes	yes
Disodium Phosphate	Sat'd	75	yes	no	yes
Ethyl Alcohol	Any	75	yes	no	yes
Ethylene Glycol	Any	75	yes	yes	yes
Ferric Chloride	45%	75	yes	no	yes
Ferrous Sulfate	Sat'd	75	yes	no	yes
Fluoboric Acid	Any	75	yes	no	yes
Formaldehyde	37%	75	yes	no	yes
Formic Acid	85%	75	yes	no	yes
Gallic Acid	Sat'd	75	yes	no	yes
Glucose	Any	75	yes	yes	yes
Glue	Any	75	yes	no	yes
Glycerine	Any	75	yes	yes	yes
Gold Plating Solution	Any	75	yes	no	yes
Hydrochloric Acid	10%	75	yes	no	yes
Hydrochloric Acid	21.5%	75	yes	no	yes
Hydrochloric Acid	37.5%	75	yes	no	yes
Hydrofluoric Acid	4%	75	yes	no	yes
Hydrofluoric Acid	10%	75	yes	no	yes
Hydrofluoric Acid	48%	75	yes	no	yes
Hydrogen Peroxide	30%	75	yes	no	yes
Hydrogen Sulfide	Sat'd	75	yes	no	yes
Hydroquinone	Any	75	yes	no	yes
Indium Plating Solution	Any	75	yes	no	yes
Lactic Acid	50%	75	yes	no	yes
Lactic Acid	Any	75	yes	no	yes

Solutions	Conc.	Temp.	Recommended Exposure		
			Splashing	Liquid	Fumes
Lead Plating Solution	Any	75	yes	no	yes
Malic Acid	Any	75	yes	no	yes
Methyl Alcohol	Any	75	yes	no	yes
Mineral Oils	Any	75	yes	yes	yes
Nickel Acetate	Sat'd	75	yes	no	yes
Nickel Plating Solution		75	yes	no	yes
Nickel Salts	Sat'd	75	yes	no	yes
Nitric Acid	35%	75	yes	no	yes
Nitric Acid	40%	75	yes	no	yes
Nitric Acid	60%	75	yes	no	yes
Nitric Acid/	15%				
Hydrofluoric Acid	4%	75	yes	no	yes
Nitric Acid/	16%				
Sodium Dichromate	13%	75	yes	no	yes
Water	71%				
Oleic Acid	Any	75	yes	no	yes
Oxalic Acid	Sat'd	75	yes	no	yes
	Any	75	yes	no	yes
Phenol	Sat'd	75	yes	no	yes
Phosphoric Acid	75%	75	yes	no	yes
Phosphoric Acid	85%	75	yes	no	yes
Potassium Acid Sulfate	Sat'd	75	yes	no	yes
Potassium Antimonate	Sat'd	75	yes	no	yes
Potassium Bisulfite	Sat'd	75	yes	no	yes
Potassium Chloride	Sat'd	75	yes	no	yes
Potassium Cuprocyanide	Sat'd	75	yes	no	yes
Potassium Cyanide	Sat'd	75	yes	no	yes
Potassium Dichromate	Sat'd	75	yes	no	yes
Potassium Hypochlorite	Sat'd	75	yes	no	yes
Potassium Sulfide	Sat'd	75	yes	no	yes
Potassium Thiosulfate	Sat'd	75	yes	no	yes
Propyl Alcohol	Sat'd	75	yes	no	yes
Rhodium Plating Solution	Sat'd	75	yes	no	yes
Silver Plating Solution	Sat'd	75	yes	no	yes
Soaps	Any	75	yes	no	yes
Sodium Acid Sulfate	Sat'd	75	yes	no	yes
Sodium Antimonate	Sat'd	75	yes	no	yes
Sodium Bicarbonate	Sat'd	75	yes	no	yes
Sodium Bisulfite	Sat'd	75	yes	no	yes
Sodium Chloride	Sat'd	75	yes	no	yes
Sodium Cyanide	Sat'd	75	yes	no	yes
Sodium Dichromate	Sat'd	75	yes	no	yes
Sodium Hydroxide	10%	75	yes	no	yes
Sodium Hydroxide	35%	75	yes	no	yes
Sodium Hydroxide	73%	75	yes	no	yes
Sodium Hypochlorite	Sat'd	75	yes	no	yes
Sodium Hypochlorite	15%	75	yes	no	yes
Sodium Sulfide	Sat'd	75	yes	no	yes
Sodium Thiosulfate	Sat'd	75	yes	no	yes
Sulfuric Acid	15%	75	yes	no	yes
Sulfuric Acid	50%	75	yes	no	yes
Sulfuric Acid	70%	75	yes	no	yes
Sulfuric Acid	98%	75	yes	no	yes
Sulfurous Acid	2%	75	yes	no	yes
Sulfurous Acid	6%	75	yes	no	yes
Tannic Acid	Sat'd	75	yes	no	yes
Tartaric Acid	Sat'd	75	yes	no	yes
Tin Chloride Aqueous	Sat'd	75	yes	no	yes
Tin Plating Solution	Sat'd	75	yes	no	yes
Triethanolamine	Sat'd	75	yes	no	yes
Trisodium Phosphate	Sat'd	75	yes	no	yes
Water	Sat'd	75	yes	no	yes
White Liquor		75	yes	no	yes
Zinc Plating Solution		75	yes	no	yes
Zinc Sulfate	Sat'd	75	yes	no	yes

Thomas&Betts

© 2003 Thomas & Betts Corporation Specifications are subject to change without notice

Ocal®

PVC Coating Chemical Resistance Chart

Solutions	Conc.	Temp.	Recommended Exposure		
			Splashing	Liquid	Fumes
Acetic Acid	10%	120	no	no	no
Acid Copper Plating Solution	160	yes	yes	yes	
Alkaline Cleaners		160	yes	yes	yes
Aluminum Chloride	Sat'd	160	yes	yes	yes
Aluminum Sulfate	Sat'd	160	yes	yes	yes
Alums	Sat'd	160	yes	yes	yes
Ammonium Chloride	Sat'd	160	yes	yes	yes
Ammonium Hydroxide	28%	120	yes	yes	yes
Ammonium Hydroxide	10%	120	yes	yes	yes
Ammonium Sulfate	Sat'd	160	yes	yes	yes
Ammonium Thiocyanate	Sat'd	160	yes	yes	yes
Amyl Alcohol	Any	90	yes	yes	yes
Arsenic Acids	Any	150	yes	yes	yes
Barium Sulfide	Sat'd	120	yes	yes	yes
Black Liquor	Sat'd	90	yes	yes	yes
Benzoic Acid	Sat'd	160	yes	yes	yes
Brass Plating Solution	Any	160	yes	yes	yes
Bromine Water	Sat'd	120	yes	yes	yes
Butyl Alcohol	Any	90	yes	yes	yes
Cadmium Plating Solution	Any	150	yes	yes	yes
Calcium Bisulfite	Any	150	yes	yes	yes
Calcium Chloride	Sat'd	160	yes	yes	yes
Calcium Hypochlorite	Sat'd	120	yes	yes	yes
Carbonic Acid	Sat'd	160	yes	yes	yes
Casein	Sat'd	90	yes	yes	yes
Castor Oil	Any	90	yes	yes	yes
Caustic Soda	35%	120	yes	yes	yes
Caustic Soda	10%	150	yes	yes	yes
Caustic Potash	35%	120	yes	yes	yes
Caustic Potash	10%	150	yes	yes	yes
Chlorine Water	Sat'd	90	yes	yes	yes
Chromium Plating Solution	Any	150	yes	yes	yes
Citric Acid	Sat'd	160	yes	yes	yes
Copper Chloride (Cupric)	Sat'd	160	yes	yes	yes
Copper Cyanide Plating Sol	Any	160	yes	yes	yes
(High Speed)	Any	180	yes	yes	yes
(with Alkali Cyanides)	Sat'd	160	yes	yes	yes
Copper Sulfate	Sat'd	160	yes	yes	yes
Cocoanut Oil	Sat'd	90	yes	yes	yes
Cottonseed Oil	Sat'd	90	yes	yes	yes
Disodium Phosphate	Sat'd	160	yes	yes	yes
Ethyl Alcohol	Any	90	yes	yes	yes
Ethylene Glycol	Any	90	yes	no	yes
Ferric Chloride	45%	120	yes	yes	yes
Ferrous Sulfate	Sat'd	150	yes	yes	yes
Fluoboric Acid	Any	150	yes	yes	yes
Formaldehyde	37%	120	yes	yes	yes
Formic Acid	85%	100	no	no	no
Gallic Acid	Sat'd	150	no	no	yes
Glucose	Any	150	yes	yes	yes
Glue	Any	150	yes	yes	yes
Glycerine	Any	90	yes	yes	yes
Gold Plating Solution	Any	150	yes	yes	yes
Hydrochloric Acid	10%	120	yes	no	yes
Hydrochloric Acid	21.5%	120	yes	no	yes
Hydrochloric Acid	37.5%	120	yes	no	yes
Hydrochloric Acid	37.5%	90	yes	no	yes
Hydrofluoric Acid	4%	140	yes	no	yes
Hydrofluoric Acid	10%	120	yes	no	yes
Hydrofluoric Acid	48%	120	yes	no	yes
Hydrogen Peroxide	30%	120	yes	yes	yes
Hydrogen Sulfide	Sat'd	120	yes	yes	yes
Hydroquinone	Any	90	yes	yes	yes
Indium Plating Solution	Any	150	yes	yes	yes
Lactic Acid	50%	120	yes	yes	yes
Lactic Acid	Any	90	yes	yes	yes
Lead Plating Solution	Any	150	yes	yes	yes

Solutions	Conc.	Temp.	Recommended Exposure		
			Splashing	Liquid	Fumes
Malic Acid	Any	90	yes	yes	yes
Methyl Alcohol	Any	90	yes	yes	yes
Mineral Oils	Any	90	yes	yes	yes
Nickel Acetate	Sat'd	160	yes	yes	yes
Nickel Plating Solution		160	yes	yes	yes
Nickel Salts	Sat'd	160	yes	yes	yes
Nitric Acid	35%	120	yes	no	yes
Nitric Acid	40%	90	yes	no	yes
Nitric Acid	60%	120	yes	no	yes
Nitric Acid/	15%				
Hydrofluoric Acid	4%	140	yes	yes	yes
Nitric Acid/	16%				
Sodium Dichromate	13%	130	yes	yes	yes
Water	71%				
Oleic Acid	Any	90	yes	yes	yes
Oxalic Acid	Sat'd	120	yes	yes	yes
	Any	90	yes	yes	yes
Phenol	Sat'd	120	no	no	no
Phosphoric Acid	75%	150	yes	yes	yes
Phosphoric Acid	85%	120	yes	yes	yes
Phosphoric Acid	85%	160	yes	yes	yes
Potassium Acid Sulfate	Sat'd	150	yes	yes	yes
Potassium Antimonate	Sat'd	150	yes	yes	yes
Potassium Bisulfite	Sat'd	90	yes	yes	yes
Potassium Chloride	Sat'd	160	yes	yes	yes
Potassium Cuprocyanide	Sat'd	150	yes	yes	yes
Potassium Cyanide	Sat'd	160	yes	yes	yes
Potassium Diachromate	Sat'd	160	yes	yes	yes
Potassium Hypochlorite	Sat'd	90	yes	no	yes
Potassium Sulfide	Sat'd	150	yes	yes	yes
Potassium Thiosulfate	Sat'd	150	yes	yes	yes
Propyl Alcohol	Sat'd	150	yes	yes	yes
Rhodium Plating Solution	Sat'd	150	yes	yes	yes
Silver Plating Solution	Sat'd	150	yes	yes	yes
Soaps	Any	90	yes	yes	yes
Sodium Acid Sulfate	Sat'd	160	yes	yes	yes
Sodium Antimonate	Sat'd	150	yes	yes	yes
Sodium Bicarbonate	Sat'd	160	yes	yes	yes
Sodium Bisulfite	Sat'd	90	yes	yes	yes
Sodium Chloride	Sat'd	160	yes	yes	yes
Sodium Cyanide	Sat'd	160	yes	yes	yes
Sodium Dichromate	Sat'd	160	yes	yes	yes
Sodium Hydroxide	10%	150	yes	no	yes
Sodium Hydroxide	35%	120	yes	no	yes
Sodium Hydroxide	73%	160	no	no	no
Sodium Hypochlorite	Sat'd	90	yes	no	yes
Sodium Hypochlorite	15%	120	yes	no	yes
Sodium Sulfide	Sat'd	150	yes	yes	yes
Sodium Thiosulfate	Sat'd	150	yes	yes	yes
Sulfuric Acid	15%	120	yes	yes	yes
Sulfuric Acid	15%	160	yes	yes	yes
Sulfuric Acid	50%	120	yes	yes	yes
Sulfuric Acid	70%	90	yes	no	yes
Sulfuric Acid	98%	100	no	no	yes
Sulfurous Acid	2%	120	yes	no	yes
Sulfurous Acid	6%	120	yes	no	yes
Tannic Acid	Sat'd	90	yes	yes	yes
Tartaric Acid	Sat'd	90	yes	yes	yes
Tin Chloride Aqueous	Sat'd	150	yes	yes	yes
Tin Plating Solution	Sat'd	150	yes	yes	yes
Triethanolamine	Sat'd	150	yes	yes	yes
Trisodium Phosphate	Sat'd	150	yes	yes	yes
Water	Sat'd	160	yes	yes	yes
White Liquor		90	yes	yes	yes
Zinc Plating Solution		160	yes	yes	yes
Zinc Sulfate	Sat'd	160	yes	yes	yes

Thomas&Betts

© 2003 Thomas & Betts Corporation Specifications are subject to change without notice

NEMA Standards Publication No. RN1-1998

Underwriter Laboratories, Inc. (UL)
333 Pfingsten Road, Northbrook, IL 60062

UL 6-1993 Safety Standard for Rigid Metal Conduit

UL 1242-1992 Safety Standard for Intermediate Metal Conduit

SECTION 3 – EXTERNAL COATINGS

3.1 Thickness

The thickness of polyvinyl chloride (PVC) coatings shall be a nominal 0.040 in. (1.02 mm). The tolerance on the coating thickness shall be +0.010 in. (0.25 mm) or -0.005 in. (0.13 mm).

3.2 Coating Material

The PVC coating shall have the properties specified in Table 3-1.

Properties of PVC Coatings **Table 3.1**

Property	Minimum Requirement	ASTM Test Method
Hardness:		
Shore A	75	D 2240
Shore D	25	D 2240
Tensile Strength, psi	2000	D 638
Elongation, percent	200	D 638
Dielectric strength, volts per mil	325	D 149
Brittleness temperature, degrees F	5	D 1790

3.3 Application of Coating

3.3.1 Cleaning

The exterior surface that is to receive the coating shall be free of grease, oil, dirt, and other extraneous matter. **The surface shall be cleaned in such a manner that the galvanized surface of the conduit is not harmed or eroded.**

3.3.2 Priming

The cleaned exterior surface shall be primed with an adhesive suitable for use with the PVC coating material to be applied.

3.3.3 Coating

The PVC material shall be applied in powder, plastisol, or pellet form by a manufacturing method which will produce a finished product conforming to these standards.

3.4 Elbows

Coated elbows shall be used with coated conduit. The thickness of the coating on elbows shall be in accordance with Section 3.1.

3.5 Couplings

Coated couplings shall be used with coated conduit. The thickness of the coating on couplings shall be at least equal to the thickness of the coating on the conduit.

Each coated coupling shall have a flexible PVC sleeve which extends from each end of the coupling and which will overlap the PVC coating on the conduit when the coupling has been installed on the conduit. The length of the sleeve extension(s) shall be at least equivalent to the nominal conduit size for sizes up through NPS 2 (53). For sizes NPS 2-1/2 (63) through NPS 6 (155), the length of the sleeve extension(s) shall be at least 2 inches (50.8 mm).

The PVC sleeve shall be a nominal thickness of 0.040 in. (1.02 mm). The inside diameter (id) of the overlapping sleeve shall be less than the outside diameter (od) of the PVC-coated conduit.

3.7 Performance Requirements

Typical physical requirements for PVC-coated conduit are given in Table 3-2.

Typical Physical Properties of PVC-Coated Rigid Conduit and IMC **Table 3.2**

Property	Requirement*	Test Method
Abrasion resistance, hours	200, no failure	ASTM G 6
Bendability, radius in inches at 73.4° ± 1.8° F	9 (228.6 mm)	ASTM G 10
Artificial weathering, hours	Minimum 1000, no adverse effect	ASTM G 23

*The above requirements are based on testing a 0.040 in. (1.02 mm) PVC coating applied over NPS 3/4 inch (21) galvanized rigid steel conduit. See Section 1 for information on the ASTM test methods.

3.8 Adhesion

The adhesion of the PVC coating to the conduit shall be greater than the strength of the coating itself. This shall be determined by making two circumferential cuts, above ½ in. (12.7 mm) apart, through the plastic to the substrate. A third cut shall be made perpendicular to and crossing the circumferential cuts. The edge of the plastic shall be carefully lifted with a knife to form a plastic tab. This tab shall be pulled perpendicular to the conduit with a pair of pliers. The plastic tab shall tear rather than any additional coating film separating from the substrate.

© 2003 Thomas & Betts Corporation. Specifications are subject to change without notice.

Specifications For OCAL-BLUE PVC Coated Aluminum Conduit and Fittings

1. All Aluminum rigid conduit prior to coating shall conform to Federal Specification WW-C-581E, ANSI specification C80.1 and UL 6. Aluminum material shall meet or exceed 6063.

2. Conduits shall be investigated by Underwriters Laboratories for the PVC (polyvinyl chloride) as the primary coating ensuring adequate protection. Conduit shall be labeled with the UL Label having only one exception requiring the use of threaded fittings.

3. The interior of the conduit shall have a blue urethane coating of a nominal thickness of .002" (2 mils).

4. The exterior of the conduit shall have a PVC coating of a minimum thickness of .040" (40 mils) applied by dipping in liquid plastisol.

5. All coated conduit shall conform to NEMA Standard No. RN-1.

6. The conduit shall be bendable without damage to either interior or exterior coating.

7. A .002" (2 mils) nominal thickness coating of blue urethane shall be applied to the exterior, the interior and the threads of all fittings and couplings.

8. The PVC coating on all form 8 fittings shall form a gasket-like flange of at least 5/16" wide and .040" (40 mils) thick covering the top of the fitting around the opening.

9. The PVC coating on all form 8 covers shall form a gasket-like flange of at least 5/16" wide and .040" (40 mils) thick covering the bottom of the cover and mating with the flange of the fitting.

10. Stainless steel encapsulated screws shall be supplied with all form 7 and form 8 fittings.

11. All hubs on fittings and couplings shall have a PVC sleeve extending one pipe diameter or 2 inches, whichever is less. The I.D. of the sleeve to be equal to the O.D. of the uncoated pipe.

12. The bond between the coating and the metal shall be greater than the tensile strength of the coatings.

13. A loose coupling shall be supplied with each length of conduit. The couplings shall have longitudinal ribs to enhance installation.

© 2003 Thomas & Betts Corporation. Specifications are subject to change without notice. www.tnb.com

OCAL Recommended Installation Procedures

PVC coated conduit is installed in much the same manner as conventional rigid galvanized steel conduit; however, certain precautions must be taken to compensate for the exterior coating and to assure satisfactory results. By following these guidelines and by using the proper tools, *a damage-free installation can be obtained.*

It is recommended that a yoke vise be used in the field for clamping PVC coated conduit. When using a yoke vise it is recommended that the standard hardened steel jaws be replaced with the specially designed OCAL JAW vice adapters that provide greater clamping force to prevent the pipe from spinning during the threading operation.

To hold conduit in any other vise, take two pieces of rigid conduit one size larger than the coated conduit, 6" – 8" long. Using a band saw, slice them the long way slightly off center. Use the smaller slices as a shell around the conduit (throw away the large ones). This will grab onto a large area, allowing a strong grip without damage to the coating.

It is preferred that a roller-type cutter be used in cutting the conduit as it results in a ¼" exposed area of pipe before the start of the PVC jacket. This will allow the threader dies to engage the conduit more easily and lessen pressure at the clamped area.

OCAL offers an electric bender manufactured to accommodate ½" through 2" PVC coated conduit allowing damage-free bending.

For 2½" and larger sizes, a hydraulic bender is recommended. Shoes especially designed for PVC coated conduit are available from most manufacturers.

If existing rigid hydraulic shoes (not EMT) are to be modified, acceptable results can be obtained by machining .060" from the inside of the shoe.

To overcome any tendency of the conduit to slip vertically out of the shoe during the bending process and cause kinking, OCAL offers a pipe retainer clamp which can be modified to the shoes of any type of bender for sizes 2½" or larger.

A hacksaw or bandsaw will result in a flush cut of the PVC and conduit. In this instance it is recommended to taper-trim the PVC starting at ¼" from the cut. This "pencil-cut" will allow the threader dies to engage more readily. If the end is not trimmed, additional pressure will be required to engage the dies.

Use a reamer to remove any burrs or sharp edges caused by the cutting operation.

Threading PVC coated conduit with RIDGID hand dies requires modification to the dies. The inside diameter of the pipe guide of the die head must be machined out .120" to compensate for the PVC coating. Factory modified die heads are available from your distributor.

After the new threads have been cut, it is important that corrosion protection be applied to the exposed metal. A degreasing spray should be used to thoroughly clean the threads and the internal ream. After the threads are completely cleaned, liberally apply Kopr-Shield™ Compound per NEC article 300.6(a).

© 2003 Thomas & Betts Corporation Specifications are subject to change without notice www.tnb.com

SPEC SERVICES

SPECIFICATION FORMS FOR PROCESS MEASURMENT AND CONTROL INSTRUMENTS, PRIMARY ELEMENTS AND CONTROL VALVES

PROJECT: GROUNDWATER TREATMENT PLANT
CUSTOMER: W.A. RASIC CONSTRUCTION
CUSTOMER JOB NO.:
PLANT:
LOCATION:

PRESSURE DIFFERENTIAL INDICATING TRANSMITTER

NO.	BY	DATE	REVISION
A	EIS	7/21/2008	FOR APPROVAL

SHEET 1 OF 2 | SPEC NO. | REV. | CONTRACT | DATE | REQ. P.O. | BY | CHK'D | APPR.

	1	Tag No	SEE SHEET 2 Service SEE SHEET 2
GENERAL	2	Function	Record ☐ Indicate ☒ Control ☐ Blind ☐ Trans ☒ Integ ☐ Other
	3	Case	MFR STD ☒ Nom Size Color: MFR STD ☒ Other
	4	Mounting	Flush ☐ Surface ☐ Yoke ☐ Other PIPE OR WALL MOUNTING
	5	Enclosure Class	General Purpose ☐ Weather Proof ☐ Explosion Proof ☒ Other CLASS 1, DIVISION 1, GROUP C AND D
			For use in Intrinsically Safe System ☐ Other
	6	Power Supply	117V 60 Hz ☐ Other ac ☒ 24 VDC Volts LOOP POWERED
	7	Chart	12 in. Circ ☐ Other Range No.
	8	Chart Drive	24 hr ☐ Other Elec. ☐ Spring ☐ Other
	9	Scale	Type Range. 1 2 3
XMTR	10	Transmitter Output	4-20 mA ☒ 10-50 mA ☐ 21-103 kPa (3-15 psig) ☐ Other For Receiver, See Spec Sheet
CONTROLLER	#	Control Modes	P=Prop (Gain), I = Integral (Auto Reset), D = Derivative (Rate) Sub: s = Slow f = Fast If ☐ Df ☐ P ☐ PI ☐ PD ☐ PID ☐ Is ☐ Ds ☐ Other
	12	Action	On Meas Increase Output: Increases ☐ Decreases ☐
	13	Auto-Man Switch	None ☐ MFR STD ☐ Other
	14	Set Point Adj	Manual ☐ External ☐ Remote ☐ Other
	15	Manual Reg.	None ☐ MFR STD ☐ Other
	16	Output	4-20 mA ☐ 10-50 mA ☐ 21-103 kPa (3-15 psig) ☐ Other
UNIT	17	Service	Flow ☐ Level ☐ Diff. Pressure ☒ Other
	18	Element Type	Diaphragm ☒ Bellows ☐ Mercury ☐ Other
	19	Material	Body 316 Element 316 SS
	20	Rating	Overrange Body Rating 2320 psig
	21	Diff. Range	Fixed ☐ Adj Range 0 - 15 PSID Set Point 10 PSID
	22		Elevation Suppression
	23	Process Data	Fluid SHEET 2 Max Temp. 248° F Max Press.
	24	Process Conn.	1/2 in. NPT ☒ Other
	25	Alarm Switches	Quantity Form Rating
	26	Function	Meas. Var. ☐ Deviation ☐ Contacts to on Inc Meas.
	27	Options	Pressure Element ☐ Range Material Temp. Element ☐ Range Type Filt Reg. ☐ Sup. Gage ☐ Output Gage ☐ Charts Valve Manifold 0305RT32A11B7 Cond. Pots ☐ Adj. Damp ☐ Integral Sq. Rt. Ext. ☐ Integrator Other
	28	MFR & Model No.	ROSEMOUNT, 3051CD2A02A1AA01H2

NOTES:
1. VENDOR TO CONFIRM MODEL NO.
2. A STAINLESS STEEL TAG, WITH TAG NUMBER STAMPED, SHALL BE PERMANENTLY ATTACHED.
3. UNIT SHALL BE FM APPROVED.

ISA Form S20.20a

The Investment with Measurable Returns

The **Rosemount 3051C** Pressure Transmitter established a new standard in pressure measurement technology. This revolutionary transmitter introduced the Coplanar(TM) platform and features the most extensive breadth of offering in the world. Even under the most demanding conditions, the performance specifications provide unmatched long-term stability and reliability second only to the 3051S.

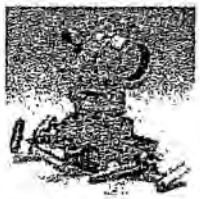

The **Rosemount 3051T** Gage and Absolute Pressure Transmitter combines proven sensor and electronics technologies with a single isolator design for absolute and gage pressure measurements from 0.3 to 10,000 psi. The 3051T provides a superior alternative for measuring absolute or gage pressure with the rugged, reliable performance that is characteristic of Rosemount pressure transmitters.

Click here to save up to $267 U.S. per Rosemount 3051T installation

- *Total Performance* of 0.15% represents transmitter performance under real operating conditions and increases loop performance and productivity.
- *Performance over time* represents transmitters performance over a period of time under changing conditions
  -Guaranteed stability of 0.125% over a five year period.
  -Reduced calibration frequencies save operations and maintenance costs.
- *Dynamic Performance* measures the speed of the transmitter's response to process changes.
  -7 to 10 faster than other smart transmitters
  -Increased control and optimization of the critical loop.
  -Increased plant safety and productivity.
- Rosemount Complete Point Solutions™ are engineered measurement solutions that combine the best products and installation practices.

Applications for the Rosemount 3051 Transmitter
The Rosemount 3051 performance specifications guarantee accuracy and stability under the most demanding conditions. The flexible CoPlanar™ platform design offers the best solutions for your application needs today and provides a seamless pathway to future technologies to meet your needs to tomorrow. This pathway includes technologies such as PlantWeb™ architecture and Fieldbus.

General Specifications	
Total Performance	± 0.15 % of span
Reference Accuracy	± 0.065% of span
Rangeability	100:1
Output	4-20 mA dc with HART Protocol

Weight	6.0 lb (2.72 kg)
Dimensions	6.4 x 3.2 x 7.8 in. (163 x 81 x 198)

Ordering Information

TABLE 11. 3051C Differential, Gage, and Absolute Pressure Transmitters — = Not Applicable • = Applicable

Model	Transmitter Type (Select One)	CD	CG	CA
3051CD	Differential Pressure Transmitter	•	—	—
3051CG	Gage Pressure Transmitter	—	•	—
3051CA	Absolute Pressure Transmitter	—	—	•

	3051CD	3051CG[1]	3051CA	CD	CG	CA
0[2]	–3 to 3 inH_2O/0.1 inH_2O (–7,5 to 7,5 mbar/0,25 mbar)	Not Applicable	Not Applicable	•	—	•
1	–25 to 25 inH_2O/0.5 inH_2O (–62,2 to 62,2 mbar/1,2 mbar)	–25 to 25 inH_2O/0.5 inH_2O (–62,2 to 62,2 mbar/1,2 mbar)	0 to 30 psia/0,3 psia (0 to 2,1 bar/20,7 mbar)	•	•	•
2	–250 to 250 inH2O/2.5 inH_2O (–623 to 623 mbar/6,2 mbar)	–250 to 250 inH_2O/2.5 inH_2O (–623 to 623 mbar/6,2 mbar)	0 to 150 psia/1.5 psia (0 to 10,3 bar/0,1 bar)	•	•	•
3	–1000 to 1000 inH_2O/10 inH_2O (–2,5 to 2,5 bar/25 mbar)	–393 to 1000 inH_2O/10 inH_2O (–0,98 to 2,5 bar/25 mbar)	0 to 800 psia/8 psia (0 to 55,2 bar/0,55 bar)	•	•	•
4	–300 to 300 psi/3 psi (–20,7 to 20,7 bar/0,2 bar)	–14.2 to 300 psi/3 psi (–0,98 to 20,7 bar/0,2 bar)	0 to 4000 psia/40 psia (0 to 275,8 bar/2,8 bar)	•	•	•
5	–2000 to 2000 psi/20 psi (–137,9 to 137,9 bar/1,4 bar)	–14.2 to 2000 psig/20 psi (–0,98 to 137,9 bar/1,4 bar)	Not Applicable	•	•	—

Code	Output	CD	CG	CA
A	4–20 mA with Digital Signal Based on *HART* Protocol	•	•	•
M[3]	Low-Power, 1–5 V dc with Digital Signal Based on *HART* Protocol *(See Option C2 for 0.8–3.2 V dc)*	•	•	•
F	*FOUNDATION* fieldbus Protocol	•	•	•
W	Profibus — PA	•	•	•

Code	Materials of Construction			CD	CG	CA
	Process Flange Type	**Flange Material**	**Drain/Vent**			
2	*Coplanar*	SST	SST	•	•	•
3[4]	*Coplanar*	*Alloy C*	*Hastelloy* C276	•	•	•
4	*Coplanar*	*Monel*	*Monel*	•	•	•
5	*Coplanar*	Plated CS	SST	•	•	•
7[4]	*Coplanar*	SST	*Hastelloy* C276	•	•	•
8[4]	*Coplanar*	Plated CS	*Hastelloy* C276	•	•	•
0	Alternate Flange—See Options on page 26			•	•	•

Code	Isolating Diaphragm	CD	CG	CA
2[4]	316L SST	•	•	•
3[4]	*Hastelloy* C276	•	•	•
4	*Monel*	•	•	•
5	Tantalum *(Available on 3051CD and CG Ranges 2–5 only. Not available on 3051CA)*	•	•	—
6	Gold-plated *Monel (Use in combination with O-ring Option Code B.)*	•	•	•
7	Gold-plated SST	•	•	•

Code	O-ring	CD	CG	CA
A	Glass-filled PTFE	•	•	•
B	Graphite-filled PTFE	•	•	•

Code	Fill Fluid	CD	CG	CA
1	Silicone	•	•	•
2	Inert fill (Halocarbon)	•	•	—

TABLE 11. 3051C Differential, Gage, and Absolute Pressure Transmitters — = Not Applicable • = Applicable

Code	Housing Material	Conduit Entry Size	CD	CG	CA
A	Polyurethane-covered Aluminum	½–14 NPT	•	•	•
B	Polyurethane-covered Aluminum	M20 × 1.5 (CM20)	•	•	•
C	Polyurethane-covered Aluminum	PG 13.5	•	•	•
D	Polyurethane-covered Aluminum	G½	•	•	•
J	SST	½–14 NPT	•	•	•
K	SST	M20 × 1.5 (CM20)	•	•	•
L	SST	PG 13.5	•	•	•
M	SST	G½	•	•	•
Code	***PlantWeb* Functionality**		**CD**	**CG**	**CA**
A01	Advanced Control Function Block Suite		•	•	•
D01	*FOUNDATION* fieldbus Diagnostics Suite		•	•	•
Code	**Alternate Flange Options (Requires Materials of Construction Code 0)**		**CD**	**CG**	**CA**
H2	Traditional Flange, 316 SST, SST Drain/Vent		•	•	•
H3[4]	Traditional Flange, *Alloy C*, *Hastelloy* C276 Drain/Vent		•	•	•
H4	Traditional Flange, *Monel*, *Monel* Drain/Vent		•	•	•
H7[4]	Traditional Flange, 316 SST, *Hastelloy* C276 Drain/Vent		•	•	•
HJ	DIN Compliant Traditional Flange, SST, 7/16 in. Adapter/Manifold Bolting		•	•	•
HK	DIN Compliant Traditional Flange, SST, 10 mm Adapter/Manifold Bolting		•	•	•
HL	DIN Compliant Traditional Flange, SST, 12mm Adapter/Manifold Bolting *(Not available on 3051CD0)*		•	•	•
FA	Level Flange, SST, 2 in., ANSI Class 150, Vertical Mount		•	•	•
FB	Level Flange, SST, 2 in., ANSI Class 300, Vertical Mount		•	•	•
FC	Level Flange, SST, 3 in., ANSI Class 150, Vertical Mount		•	•	•
FD	Level Flange, SST, 3 in., ANSI Class 300, Vertical Mount		•	•	•
FP	DIN Level Flange, SST, DN 50, PN 40, Vertical Mount		•	•	•
FQ	DIN Level Flange, SST, DN 80, PN 40, Vertical Mount		•	•	•
Code	**Integral Mount Manifold Options (Requires Materials of Construction Code 0)**		**CD**	**CG**	**CA**
S5	Assemble to Rosemount 305 Integral Manifold (specified separately, see the Rosemount 305 and 306 Integral Manifolds PDS (document number 00813-0100-4733))		•	•	•
Code	**Integral Mount Primary Elements (Optional)**		**CD**	**CG**	**CA**
S4	Factory Assembly to Rosemount Primary Element (Rosemount *Annubar* or Rosemount 1195 Integral Orifice) *(With the primary element installed, the maximum operating pressure will equal the lesser of either the transmitter or the primary element. Option is available for factory assembly to range 1–4 transmitters only)*		•	—	—
S3	Factory Assembly to Rosemount 405 Primary Element		•	—	—
Code	**Diaphragm Seal Assemblies (Optional)** *NOTE: Standard flange and adapter bolts are austenitic 316 SST.*		**CD**	**CG**	**CA**
S1	One Diaphragm Seal (Direct Mount or Capillary Connection Type)		•	•	•
S2	Two Diaphragm Seals (Direct Mount or Capillary Connection Type)		•	—	—
Code	**Optional All Welded Diaphragm Seal Systems (for high vacuum applications)** *NOTE: Standard flange and adapter bolts are austenitic 316 SST.*		**CD**	**CG**	**CA**
S7	One Diaphragm Seal, All-Welded System (Capillary Connection Type)		•	•	•
S8	Two Diaphragm Seals, All-Welded System (Capillary Connection Type)		•	—	—
S0	One Diaphragm Seal, All-Welded System (Direct Mount Connection Type)		•	•	•
S9	Two Diaphragm Seals, All-Welded System (One Direct Mount and One Capillary Connection Type)		•	—	—

TABLE 11. 3051C Differential, Gage, and Absolute Pressure Transmitters — = Not Applicable • = Applicable

Code	Mounting Bracket Options	CD	CG	CA
B4	*Coplanar* Flange Bracket for 2-in. Pipe or Panel Mounting, all SST	•	•	•
B1	Traditional Flange Bracket for 2-in. Pipe Mounting, CS Bolts	•	•	•
B2	Traditional Flange Bracket for Panel Mounting, CS Bolts	•	•	•
B3	Traditional Flange Flat Bracket for 2-in. Pipe Mounting, CS Bolts	•	•	•
B7	B1 Bracket with Series 300 SST Bolts	•	•	•
B8	B2 Bracket with Series 300 SST Bolts	•	•	•
B9	B3 Bracket with Series 300 SST Bolts	•	•	•
BA	SST B1 Bracket with Series 300 SST Bolts	•	•	•
BC	SST B3 Bracket with Series 300 SST Bolts	•	•	•
Code	**Hazardous Locations Certification Options**	**CD**	**CG**	**CA**
E5	FM Explosionproof Approval	•	•	•
I5	FM Non-Incendive and Intrinsic Safety Approval	•	•	•
K5	FM Explosionproof and Intrinsic Safety Approval	•	•	•
I1[5]	ATEX Intrinsic Safety and Dust Certification	•	•	•
N1[5]	ATEX Type N and Dust Certification	•	•	•
E8	ATEX Flame-proof and Dust Certification	•	•	•
E4[5]	JIS Flame-proof Certification			
	JIS Intrinsic Safety Certification *(Only available with HART Option Code A)*			—
C5[6]	Measurement Canada Accuracy Approval *(Limited availability depending on transmitter type and range. Contact an Emerson Process Management representative)*			
C6	CSA Explosion-proof and Intrinsic Safety Approval	•	•	•
K6[5]	CSA and ATEX Explosion-proof and Intrinsic Safety Approval (combination of C6 and K8)	•	•	•
KB	FM and CSA Explosion-proof and Intrinsic Safety Approvals (combination of K5 and C6)	•	•	•
K7	SAA Flame-proof and Intrinsic Safety Approvals (combination of I7, N7, and E7)	•	•	•
K8[5]	ATEX Flame-proof and Intrinsic Safety Approvals (combination of I1 and E8)	•	•	•
KD[5]	FM, CSA, and ATEX Explosion-proof and Intrinsically Safe combination of K5, C6, I1, and E8	•	•	•
I7	SAA Intrinsic Safety Certification	•	•	•
E7	SAA Flame-proof Certification	•	•	•
N7	SAA Type N Certification	•	•	•
IA	ATEX Intrinsic Safety for FISCO; for *FOUNDATION* fieldbus protocol only	•	•	•
Code	**Bolting Options**	**CD**	**CG**	**CA**
L4	Austenitic 316 SST Bolts	•	•	•
L5	ASTM A 193, Grade B7M Bolts	•	•	•
L6	*Monel* Bolts	•	•	•
Code	**Meters (Optional)**	**CD**	**CG**	**CA**
M5	LCD display for Aluminum Housing (Housing Codes A, B, C, and D only)	•	•	•
M6	LCD display for SST Housing (Housing Codes J, K, L, and M only)	•	•	•

TABLE 11. 3051C Differential, Gage, and Absolute Pressure Transmitters — = Not Applicable • = Applicable

Code	Other Options	CD	CG	CA
Q4	Calibration Data Sheet	•	•	•
Q8	Material Traceability Certification per EN 10204 3.1.B *(Only available for the sensor module housing and Coplanar or traditional flanges and adapters (3051C), and for the sensor module housing and low-volume, Coplanar flange and adapter (3051C with Option Code S1))*			
Q16	Surface finish certification for sanitary remote seals			
QP	Calibration certification and tamper evident seal			
QS	Certificate of FMEDA Data			
J1[6][7]	Local Zero Adjustment Only			
J3[6][7]	No Local Zero or Span Adjustment			
T1	Transient Protection Terminal Block			
C1[6]	Custom Software Configuration (Completed CDS 00806-0100-4001 required with order)	•	•	•
C2[6]	0.8–3.2 V dc Output with Digital Signal Based on *HART* Protocol (Output Code M only)			
C3	Gage Calibration (3051CA4 only)	—	—	•
C4[6][8]	Analog Output Levels Compliant with NAMUR Recommendation NE 43			
CN[6][8]	Analog Output Levels Compliant with NAMUR Recommendation NE 43 Alarm Configuration–Low			
P1	Hydrostatic Testing with Certificate	•	•	•
P2	Cleaning for Special Service	•	•	•
P3	Cleaning for <1 PPM Chlorine/Fluorine	•	•	•
P4	Calibrate at line pressure *(Specify Q4B on order for corresponding certificate)*	•	•	•
DF	½-14 NPT flange adapter(s)— Material determined by flange material	•	•	•
D7	*Coplanar* Flange Without Drain/Vent Ports	•	•	•
D8	Ceramic Ball Drain/Vents	•	•	•
D9	JIS Process Connection—RC ¼ Flange with RC ½ Flange Adapter	•	•	•
P8	0.04% accuracy to 5:1 turndown (Range 2-4)	•	•	•
P9	4500 psig Static Pressure Limit (3051CD Ranges 2–5 only)	•	—	—
V5[9]	External Ground Screw Assembly	•	•	•

Typical Model Number: 3051CD 2 A 2 2 A 1 A B4

(1) 3051CG lower range limit varies with atmospheric pressure.

(2) 3051CD0 is available only with Output Code A, Process Flange Code 0 (Alternate Flange H2, H7, HJ, or HK), Isolating Diaphragm Code 2, O-ring Code A, and Bolting Option L4.

(3) Not available with hazardous locations certification Options Codes I1, N1, E4, K6 and K8.

(4) Materials of Construction comply with recommendations per NACE MR0175/ISO 15156 for sour oil field production environments. Environmental limits apply to certain materials. Consult latest standard for details. Selected materials also conform to NACE MR0103 for sour refining environments.

(5) Not available with Low Power code M.

(6) Not available with Fieldbus (output code F) or Profibus (output code W).

(7) Local zero and span adjustments are standard unless Option Code J1 or J3 is specified

(8) NAMUR-Compliant operation is pre-set at the factory and cannot be changed to standard operation in the field.

(9) The V5 option is not needed with the T1 option; external ground screw assembly is included with the T1 option.

TABLE 12. 3051T Gage and Absolute Pressure Transmitter

Model	Transmitter Type	
3051T	Pressure Transmitter	
Code	**Pressure Type**	
G	Gage	
A	Absolute	
Code	**Pressure Ranges (Range/Min. Span)** 3051TG(1)	3051TA
1	–14.7 to 30 psi/0.3 psi (–1,01 to 2,1 bar/20,7 mbar)	0 to 30 psia/0.3 psia (0 to 2,1 bar/20,7 mbar)
2	–14.7 to 150 psi/1.5 psi (–1,01 to 10,3 bar/103,4 mbar)	0 to 150 psia/1.5 psia (0 to 10,3 bar/103,4 mbar)
3	–14.7 to 800 psi/8 psi (–1,01 to 55,2 bar/0,55 bar)	0 to 800 psia/8 psia (0 to 55,2 bar/0,55 bar)
4	–14.7 to 4000 psi/40 psi (–1,01 to 275,8 bar/2,8 bar)	0 to 4000 psia/40 psia (0 to 275,8 bar/2,8 bar)
5	–14.7 to 10000 psi/2000 psi (–1,01 to 689,5 bar/138 bar)	0 to 10000 psia/2000 psia (0 to 689,5 bar/138 bar)
Code	**Output**	
A	4–20 mA with Digital Signal Based on *HART* Protocol	
M	Low-Power 1–5 V dc with Digital Signal Based on *HART* Protocol (See Option Code C2 for 0.8–3.2 V dc Output) *(Not available with hazardous certification Option Codes I1, N1, E4, K6 or K8)*	
F	*FOUNDATION* fieldbus Protocol	
W	Profibus — PA	
Code	**Process Connection Style**	
2B	1/2–14 NPT Female	
2C	G½ A DIN 16288 Male (Available in SST for Range 1–4 only)	
2F	Coned and Threaded, Compatible with Autoclave Type F-250-C *(Only available in SST for Range 5)*	
Code	**Isolating Diaphragm**	**Process Connection Wetted Parts Material**
2(2)	316L SST	316L SST
3(2)	*Hastelloy* C276	*Hastelloy* C276
Code	**Fill Fluid**	
1	Silicone	
2	Inert (Fluorinert® FC-43)	
Code	**Housing Material**	**Conduit Entry Size**
A	Polyurethane-covered Aluminum	½–14 NPT
B	Polyurethane-covered Aluminum	M20 × 1.5 (CM20)
C	Polyurethane-covered Aluminum	PG 13.5
D	Polyurethane-covered Aluminum	G½
J	SST	½–14 NPT
K	SST	M20 × 1.5 (CM20)
L	SST	PG 13.5
M	SST	G½
Code	***PlantWeb* Functionality**	
A01	Advanced Control Function Block Suite	
D01	*FOUNDATION* fieldbus Diagnostics Suite	
Code	**Integral Mount Manifold (Optional)**	
S5	Assemble to Rosemount 306 Integral Manifold (specified separately, see the Rosemount 305 and 306 Integral Manifolds PDS (document number 00813-0100-4733)) *(Requires 1/2-in. process connection code 2B)*	
Code	**Remote Diaphragm Seals Assemblies (Optional)**	
S1	One remote diaphragm seal (Direct Mount or Capillary Connection Type) (Requires Process Connection Style code 2B)	
Code	**Mounting Brackets (Optional)**	
B4	Bracket for 2-in. Pipe or Panel Mounting, All SST	

TABLE 12. 3051T Gage and Absolute Pressure Transmitter

Code	Hazardous Locations Certifications (Optional)
E5	FM Explosion-proof Approval
I5	FM Non-Incendive and Intrinsic Safety Approval
K5	FM Explosion-proof and Intrinsic Safety Approval
C5	Measurement Canada accuracy approval *(Limited availability depending on transmitter type and range. Contact an Emerson Process Management representative)*
C6	CSA Explosion-proof and Intrinsic Safety Approval
K6[3]	CSA and ATEX Explosion-proof and Intrinsic Safety Approval (combination of C6 and K8)
KB	FM and CSA Explosion-proof and Intrinsic Safety Approvals (combination of K5 and C6)
K7	SAA Flame-proof and Intrinsic Safety Approvals (combination of I7, N7, and E7)
K8[3]	ATEX Flame-proof and Intrinsic Safety Approvals (combination of I1 and E8)
KD[3]	CSA, FM, and ATEX Explosion-proof and Intrinsic Safety Approval (combination of K5, C6, I1, and E8)
I7	SAA Intrinsic Safety Certification
E4[3]	JIS Flame-proof Certification
E7	SAA Flame-proof Certification
N7	SAA Type N Certification
I1[3]	ATEX Intrinsic Safety and Dust Certification
N1[3]	ATEX Type N and Dust Certification
E8	ATEX Flame-proof and Dust Certification
DW	NSF drinking water approval
IA	ATEX Intrinsic Safety for FISCO; for *FOUNDATION* fieldbus protocol only

Code	Other Options
Q4	Calibration Data Sheet
Q8	Material Traceability Certification per EN 10204 3.1.B *NOTE: This option applies to the process connection only.*
Q16	Surface finish certification for sanitary remote seals
QP	Calibration certification and tamper evident seal
QS	Certificate of FMEDA Data
J1[4][5]	Local Zero Adjustment Only
J3[4][5]	No Local Zero or Span Adjustment
M5	LCD display for Aluminum Housing (Housing Codes A, B, C, and D only)
M6	LCD display for SST Housing (Housing Codes J, K, L and M only)
T1	Transient Protection Terminal Block
C1[4]	Custom Software Configuration (Completed CDS 00806-0100-4001 required with order)
C2[4]	0.8-3.2 V dc Output with Digital Signal Based on *HART* Protocol (Output Code M only)
C4[4][6]	Analog Output Levels Compliant with NAMUR Recommendation NE 43, 27-June-1996.
CN[4][6]	Analog Output Levels Compliant with NAMUR Recommendation NE 43, Low Alarm Configuration
P1	Hydrostatic Testing with Certificate
P2	Cleaning for Special Service
P3	Cleaning for <1 PPM Chlorine/Fluorine
P8	0.04% accuracy to 5:1 turndown (Range 1-4)
V5[7]	External Ground Screw Assembly

Typical Model Number: 3051T G 5 F 2A 2 1 A B4

(1) 3051TG lower range limit varies with atmospheric pressure.

(2) Materials of Construction comply with recommendations per NACE MR0175/ISO 15156 for sour oil field production environments. Environmental limits apply to certain materials. Consult latest standard for details. Selected materials also conform to NACE MR0103 for sour refining environments.

(3) Not available with low-power Option Code M.

(4) Not available with fieldbus (output code F) or Profibus protocols (output code W).

(5) Local zero and span adjustments are standard unless Option Code J1 or J3 is specified.

(6) NAMUR-Compliant operation is pre-set at the factory and cannot be changed to standard operation in the field.

(7) The V5 option is not needed with T1 option; external ground screw assembly is included with the T1 option.

TABLE 13. 3051L Flange-Mounted Liquid Level Transmitter

Model	Transmitter Type		
3051L	Flange-Mounted Liquid Level Transmitter		
Code	**Pressure Ranges (Range/Min. Span)**		
2	−250 to 250 inH_2O/2.5 inH_2O (−0,6 to 0,6 bar/6,2 mbar)		
3	−1000 to 1000 inH_2O/10 inH_2O (−2,5 to 2,5 bar/25 mbar)		
4	−300 to 300 psi/3 psi (−20,7 to 20,7 bar/0,2 bar)		
Code	**Output**		
A	4–20 mA with Digital Signal Based on *HART* Protocol		
M	Low-Power 1–5 V dc with Digital Signal Based on *HART* Protocol (See Option Code C2 for 0.8–3.2 V dc Output) *(Not available with hazardous certification Option Codes I1, N1, E4, K6, and K8)*		
F	*FOUNDATION* fieldbus Protocol		
W	Profibus – PA		
High Pressure Side			
Code	**Diaphragm Size**	**Material**	**Extension Length**
G0	2 in./DN 50	316L SST	Flush Mount Only
H0	2 in./DN 50	*Hastelloy* C276	Flush Mount Only
J0	2 in./DN 50	Tantalum	Flush Mount Only
A0	3 in./DN 80	316L SST	Flush Mount
A2	3 in./DN 80	316L SST	2 in./50 mm
A4	3 in./DN 80	316L SST	4 in./100 mm
A6	3 in./DN 80	316L SST	6 in./150 mm
B0	4 in./DN 100	316L SST	Flush Mount
B2	4 in./DN 100	316L SST	2 in./50 mm
B4	4 in./DN 100	316L SST	4 in./100 mm
B6	4 in./DN 100	316L SST	6 in./150 mm
C0	3 in./DN 80	*Hastelloy* C276	Flush Mount
C2	3 in./DN 80	*Hastelloy* C276	2 in./50 mm
C4	3 in./DN 80	*Hastelloy* C276	4 in./100 mm
C6	3 in./DN 80	*Hastelloy* C276	6 in./150 mm
D0	4 in./DN 100	*Hastelloy* C276	Flush Mount
D2	4 in./DN 100	*Hastelloy* C276	2 in./50 mm
D4	4 in./DN 100	*Hastelloy* C276	4 in./100 mm
D6	4 in./DN 100	*Hastelloy* C276	6 in./150 mm
E0	3 in./DN 80	Tantalum	Flush Mount Only
F0	4 in./DN 100	Tantalum	Flush Mount Only

TABLE 13. 3051L Flange-Mounted Liquid Level Transmitter

Code	Mounting Flange		
	Size	ASME B 16.5 (ANSI) or DIN Flange Rating	Material
M	2 in.	Class 150	CS
A	3 in.	Class 150	CS
B	4 in.	Class 150	CS
N	2 in.	Class 300	CS
C	3 in.	Class 300	CS
D	4 in.	Class 300	CS
P	2 in.	Class 600	CS
E	3 in.	Class 600	CS
X	2 in.	Class 150	SST
F	3 in.	Class 150	SST
G	4 in.	Class 150	SST
Y	2 in.	Class 300	SST
H	3 in.	Class 300	SST
J	4 in.	Class 300	SST
Z	2 in.	Class 600	SST
L	3 in.	Class 600	SST
Q	DN 50	PN 10-40	CS
R	DN 80	PN 40	CS
S	DN 100	PN 40	CS
V	DN 100	PN 10/16	CS
K	DN 50	PN 10-40	SST
T	DN 80	PN 40	SST
U	DN 100	PN 40	SST
W	DN 100	PN 10/16	SST

Code	Process Fill-High Pressure Side	Temperature Limits
A	*Syltherm XLT*	–100 to 300 °F (–73 to 135 °C)
C	*D. C. Silicone 704*	60 to 400 °F (15 to 205 °C)
D	*D. C. Silicone 200*	–40 to 400 °F (–40 to 205 °C)
H	Inert (Halocarbon)	–50 to 350 °F (–45 to 177 °C)
G	Glycerine and Water	0 to 200 °F (–17 to 93 °C)
N	*Neobee M-20*	0 to 400 °F (–17 to 205 °C)
P	Propylene Glycol and Water	0 to 200 °F (–17 to 93 °C)

Low Pressure Side				
Code	Configuration	Flange Adapter	Diaphragm Material	Sensor Fill Fluid
11	Gage	SST	316L SST	Silicone
21	Differential	SST	316L SST	Silicone
22	Differential	SST	*Hastelloy* C276	Silicone
2A	Differential	SST	316L SST	Inert (Halocarbon)
2B	Differential	SST	*Hastelloy* C276	Inert (Halocarbon)
31	Remote Seal	SST	316L SST	Silicone *(Requires Option Code S1)*

Code	O-ring Material
A	Glass-filled PTFE

TABLE 13. 3051L Flange-Mounted Liquid Level Transmitter

Code	Housing Material	Conduit Entry Size
A	Polyurethane-covered Aluminum	½–14 NPT
B	Polyurethane-covered Aluminum	M20 × 1.5 (CM20)
C	Polyurethane-covered Aluminum	PG 13.5
D	Polyurethane-covered Aluminum	G½
J	SST	½–14 NPT
K	SST	M20 × 1.5 (CM20)
L	SST	PG 13.5
M	SST	G½

Code	*PlantWeb* Functionality
A01	Advanced Control Function Block Suite
D01	*FOUNDATION* fieldbus Diagnostics Suite

Code	Diaphragm Seal Assemblies (Optional)
S1	One Diaphragm Seal *(requires low pressure side Option Code 31 capillary connection type)*

Code	Hazardous Locations Certification Options
E5	FM Explosion-proof Approval
I5	FM Non-incendive and Intrinsic Safety Approval
K5	FM Explosion-proof and Intrinsic Safety Approval
I1[1]	ATEX Intrinsic Safety and Dust Certification
N1[1]	ATEX Type N and Dust Certification
E8	ATEX Flame-proof and Dust Certification
E4[1]	JIS Flame-proof Certification
C6	CSA Explosion-proof and Intrinsic Safety Approval
K6[1]	CSA and ATEX Explosion-proof and Intrinsic Safety Approval (combination of C6 and K8)
KB	FM and CSA Explosion-proof and Intrinsic Safety Approvals (combination of K5 and C6)
K7	SAA Flame-proof and Intrinsic Safety Approvals (combination of I7, N7, and E7)
K8[1]	ATEX Flame-proof and Intrinsic Safety Approvals (combination of I1 and E8)
KD[1]	CSA, FM, and ATEX Explosion-proof and Intrinsic Safety Approval (combination of K5, C6, I1, and E8)
I7	SAA Intrinsic Safety Certification
E7	SAA Flame-proof Certification
N7	SAA Type N Certification
IA	ATEX Intrinsic Safety for FISCO for *FOUNDATION* fieldbus protocol only

Code	Bolt for Flange and Adapters (Optional)
L5	ASTM A 193, Grade B7M Bolts

Code	Meter Options
M5	LCD display for Aluminum Housing *(Available with Housing codes A, B, C, and D only)*
M6	LCD display for SST Housing *(Available with Housing codes J, K, L, and M only)*

TABLE 13. 3051L Flange-Mounted Liquid Level Transmitter

Code	Other Options
Q4	Calibration Data Sheet
Q8	Material Traceability Certification per EN 10204 3.1.B *(Available with the diaphragm, upper housing, Coplanar flange, adapter, sensor module housing, lower housing/flushing connection, and extension)*
QP	Calibration certification and tamper evident seal
J1[2][3]	Local Zero Adjustment Only
J3[2][3]	No Local Zero or Span Adjustment
T1	Transient Protection Terminal Block
C1[2]	Custom Software Configuration *(Completed CDS 00806-0100-4001 required with order)*
C2[2]	0.8–3.2 V dc Output with Digital Signal Based on *HART* Protocol *(Available with Output code M only)*
C4[2][4]	Analog Output Levels Compliant with NAMUR Recommendation NE 43
CN[2][4]	Analog Output Levels Compliant with NAMUR Recommendation NE 43; Alarm Configuration–Low
D8	Ceramic Ball Drain/Vents
V5[5]	External Ground Screw Assembly

Code	Lower Housing Flushing Connections					
	Ring Material	**Number**	**Size**	**2 in.**	**3 in.**	**4 in.**
F1	SST	1	1/4	•	•	•
F2	SST	2	1/4	•	•	•
F3[6]	*Hastelloy* C276	1	1/4	•	•	•
F4[6]	*Hastelloy* C276	2	1/4	•	•	•
F7	SST	1	1/2	•	•	•
F8	SST	2	1/2	•	•	•
F9	*Hastelloy* C276	1	1/2	•	•	•
F0	*Hastelloy* C276	2	1/2	•	•	•

Typical Model Number:

(1) Not available with low-power Option Code M

(2) Not available with fieldbus (output code F) or profibus protocols (output code W).

(3) Local zero and span adjustments are standard unless Option Code J1 or J3 is specified.

(4) NAMUR-Compliant operation is pre-set at the factory and cannot be changed to standard operation in the field.

(5) The V5 option is not needed with the T1 option; external ground screw assembly is included with the T1 option.

(6) Not available with Option Codes A0, B0, and G0.

TABLE 14. 3051H Pressure Transmitter for High-Temperature Processes — = Not Applicable • = Applicable

Model	Transmitter Type (Select One)		HD	HG
3051HD	Differential Pressure Transmitter for High-Temperature Processes		•	—
3051HG	Gage Pressure Transmitter for High-Temperature Processes		—	•
Code	**3051HD**	**3051HG**		
2	–250 to 250 inH_2O/2.5 inH_2O (–0,62 to 0,62 bar/6,2 mbar)	–250 to 250 inH_2O/2.5 inH_2O (–0,62 to 0,62 bar/6,2 mbar)		
3	–1000 to 1000 inH_2O/10 inH_2O (–2,5 to 2,5 bar/25 mbar)	–407 to 1000 inH_2O/10 inH_2O (–1,01 to 2,5 bar/25 mbar)		
4	–300 to 300 inH_2O/3 psi (–747 to 747 mbar/0,2 bar)	–14.7 to 300 psi/3 psi (–1,01 to 20,7 bar/0,2 bar)		
5	–2000 to 2000 psi/20 psi (–138 to 138 bar/1,4 bar)	–14.7 to 2000 psig/20 psi (–1,01 to 138 bar/1,4 bar)		

NOTE: 3051HG lower range limit varies with atmospheric pressure.

Code	Output	HD	HG
A	4–20 mA with Digital Signal Based on *HART* Protocol	•	•
M	Low Power 1–5 V dc with Digital Signal Based on *HART* Protocol (See Option Code C2 for 0.8–3.2 V dc Output) *(Not available with hazardous certification Option Codes I1, N1, E4, K6, and K8)*	•	•
F	*FOUNDATION* fieldbus Protocol	•	•
W	Profibus – PA	•	•

Code	Process Connection		HD	HG
	Process Flange Material	**Drain/Vent**		
2	SST	SST	•	•
7[1]	SST	*Hastelloy* C276	•	•

Code	Process Isolating Diaphragm	HD	HG
2	316L SST	•	•
3[1]	*Hastelloy* C276	•	•
5	Tantalum	•	•

Code	O-ring Material	HD	HG
A	Glass-Filled PTFE	•	•

Code	Process Fill Fluid	HD	HG
D	*D.C. 200* Silicone	•	•
H	Inert	•	•
N	*Neobee M-20*	•	•

Code	Sensor Module Isolator Material	HD	HG
2	SST	•	•

Code	Sensor Module Fill Fluid	HD	HG
1	Silicone	•	•
2	Inert (Halocarbon)	•	•

Code	Housing Material	Conduit Entry Size	HD	HG
A	Polyurethane-covered Aluminum	½–14 NPT	•	•
B	Polyurethane-covered Aluminum	M20 × 1.5 (CM20)	•	•
C	Polyurethane-covered Aluminum	PG 13.5	•	•
D	Polyurethane-covered Aluminum	G½	•	•
J	SST	½–14 NPT	•	•
K	SST	M20 × 1.5 (CM20)	•	•
L	SST	PG 13.5	•	•
M	SST	G½	•	•

Code	*PlantWeb* Functionality
A01	Advanced Control Function Block Suite
D01	*FOUNDATION* fieldbus Diagnostics Suite

Code	Integral Mount Primary Elements (Optional)	HD	HG
S4	Factory Assembly to Rosemount Primary Element (Rosemount *Annubar* or Rosemount 1195 Integral Orifice) *(With the primary element installed, the maximum operating pressure will equal the lesser of either the transmitter or the primary element. Option is available for factory assembly to range 1–4 transmitters only)*	•	—

TABLE 14. 3051H Pressure Transmitter for High-Temperature Processes — = Not Applicable • = Applicable

Code	Mounting Bracket Options	HD	HG
B5	Universal Mounting Bracket for 2-in. Pipe or Panel Mount, CS Bolts	•	•
B6	Universal Mounting Bracket for 2-in. Pipe or Panel Mount, SST Bolts	•	•
Code	**Hazardous Locations Certification Options**	**HD**	**HG**
E5	FM Explosion-proof Approval	•	•
I5	FM Non-incendive and Intrinsic Safety Approval	•	•
K5	FM Explosion-proof and Intrinsic Safety Approval	•	•
I1[2]	ATEX Intrinsic Safety and Dust Certification	•	•
N1[2]	ATEX Type N and Dust Certification	•	•
E8	ATEX Flame-proof and Dust Certification	•	•
E4[2]	JIS Flame-proof Certification	•	•
C6	CSA Explosion-proof and Intrinsic Safety Approval	•	•
K6[2]	CSA and ATEX Explosion-proof and Intrinsic Safety Approval (combination of C6 and K8)	•	•
KB	FM and CSA Explosion-proof and Intrinsic Safety Approvals (combination of K5 and C6)	•	•
K7	SAA Flame-proof and Intrinsic Safety Approvals (combination of I7, N7, and E7)	•	•
KB[2]	ATEX Flame-proof and Intrinsic Safety Approvals (combination of I1 and E8)	•	•
KD[2]	CSA, FM, and ATEX Explosion-proof and Intrinsic Safety Approval (combination of K5, C6, I1, and E8)	•	•
I7	SAA Intrinsic Safety Certification	•	•
E7	SAA Flame-proof Certification	•	•
N7	SAA Type N Certification	•	•
IA	ATEX Intrinsic Safety for FISCO for *FOUNDATION* fieldbus protocol only	•	•
IE	FM FISCO Intrinsic Safety; for *FOUNDATION* fieldbus protocol only	•	•
Code	**Bolt for Flange and Adapter Options**	**HD**	**HG**
L4	Austenitic 316 SST Bolts	•	•
Code	**Meter Options**	**HD**	**HG**
M5	LCD display for Aluminum Housing *(Available with Housing codes A, B, C, and D only)*	•	•
M6	LCD display for SST Housing *(Available with Housing codes J, K, L, and M only)*	•	•
Code	**Other Options**	**HD**	**HG**
Q4	Calibration Data Sheet	•	•
Q8	Material traceability certification per EN 10204 3.1.B	•	•
QP	Calibration certification and tamper evident seal	•	•
J1[3]	Local Zero Adjustment Only *(Local zero and span adjustments are standard unless Option Code J1 or J3 is specified.)*	•	•
J3[3]	No Local Zero or Span Adjustment *(Local zero and span adjustments are standard unless Option Code J1 or J3 is specified)*	•	•
T1	Transient Protection Terminal Block	•	•
C1[3]	Custom Software Configuration (Completed CDS 00806-0100-4001 required with order)	•	•
C2[3]	0.8–3.2 V dc Output with Digital Signal Based on *HART* Protocol *(Output Code M only)*	•	•
C4[3][4]	Analog Output Levels Compliant with NAMUR Recommendation NE 43	•	•
CN[3][4]	Analog Output Levels Compliant with NAMUR Recommendation NE 43: Alarm Configuration–Low	•	•
P1	Hydrostatic Testing with Certificate	•	•
P2	Cleaning for Special Service	•	•
P3	Cleaning for <1 PPM Chlorine/Fluorine	•	•
DF	1/2–14 NPT flange adapters—SST	•	•
D8	Ceramic Ball Drain/Vents	•	•
V5[5]	External Ground Screw Assembly	•	•

Typical Model Number: 3051HG 2 A 2 2 A H 2 1 A B5

(1) Materials of Construction comply with recommendations per NACE MR0175/ISO 15156 for sour oil field production environments. Environmental limits apply to certain materials. Consult latest standard for details. Selected materials also conform to NACE MR0103 for sour refining environments.

(2) Not available with low-power Option Code M.

(3) Not available with fieldbus (output code F) or profibus protocols (output code W).

(4) NAMUR-Compliant operation is pre-set at the factory and cannot be changed to standard operation in the field.

(5) The V5 option is not needed with the T1 option; external ground screw assembly is included with the T1 option.

OPTIONS

Standard Configuration

Unless otherwise specified, transmitter is shipped as follows:

ENGINEERING UNITS	
***Differential/Gage*:**	inH_2O (Range 0, 1, 2, and 3) psi (Range 4 and 5)
***Absolute/3051T*:**	psi (all ranges)
4 mA (1 V dc)[1]:	0 (engineering units above)
20 mA (5 V dc):	Upper range limit
Output:	Linear
Flange type:	Specified model code option
Flange material:	Specified model code option
O-ring material:	Specified model code option
Drain/vent:	Specified model code option
Integral meter:	Installed or none
Alarm[1]:	Upscale
Software tag:	(Blank)

(1) Not applicable to fieldbus.

Custom Configuration *HART* protocol only[1]

If Option Code C1 is ordered, the customer may specify the following data in addition to the standard configuration parameters.

- Output Information
- Transmitter Information
- LCD display Configuration
- Hardware Selectable Information
- Signal Selection

Refer to the "HART Protocol C1 Option Configuration Data Sheet" on page 39.

Tagging (3 options available)

- Standard SST hardware tag is wired to the transmitter. Tag character height is 0.125 in. (3,18 mm), 56 characters maximum.
- Tag may be permanently stamped on transmitter nameplate upon request, 56 characters maximum.
- Tag may be stored in transmitter memory (30 characters maximum). Software tag is left blank unless specified.

Commissioning tag (fieldbus only)

A temporary commissioning tag is attached to all transmitters. The tag indicates the device ID and allows an area for writing the location.

Optional Rosemount 305 or 306 Integral Manifolds

Factory assembled to 3051C and 3051T transmitters. Refer to the following Product Data Sheet (document number 00813-0100-4733) for additional information.

Optional Three-Valve Manifolds (Packaged Separately)

- Part No.1151-0150-0001: 3-Valve Manifold, Carbon Steel
- Part No. 1151-0150-0002: 3-Valve Manifold, 316 SST

(1) Not applicable to fieldbus.

Optional Diaphragm and Sanitary Seals

Refer to Product Data Sheet 00813-0100-4016 or 00813-0201-4016. for additional information.

Output Information[1]

Output range points must be the same unit of measure. Available units of measure include:

inH2O	inH2O@4 °C[1]	psi	Pa
inHg	ftH2O	bar	kPa
mmH2O	mmH2O@4 °C[1]	mbar	torr
mmHg	g/cm2	kg/cm2	atm

(1) Not available on low power or previous versions.

LCD display

M5 Digital Meter, 5-Digit, 2-Line LCD

- Direct reading of digital data for higher accuracy
- Displays user-defined flow, level, volume, or pressure units
- Displays diagnostic messages for local troubleshooting
- 90-degree rotation capability for easy viewing

M6 Digital Meter with 316 Stainless Steel Cover

- For use with stainless steel housing option (housing codes J, K, and L)

Local Span and Zero Adjustment[2]

Transmitters ship with local span and zero adjustments standard unless otherwise specified.

- Non-interactive external zero and span adjustments ease calibration
- Magnetic switches replace standard potentiometer adjustments to optimize performance

J1 Local Zero Adjustment Only[1]

J3 No Local Zero or Span Adjustment[1]

Transient Protection

T1 Integral Transient Protection Terminal Block

- Integral transient protection terminal block
- Meets IEEE Standard 587, Category B
  1 kV crest (10 × 1 000 microseconds)
  3 kV crest (8 × 20 microseconds)
  6 kV crest (1.2 × 50 microseconds)
- Meets IEEE Standard 472, Surge Withstand Capability
  SWC 2,5 kV crest, 1 MHz wave form
- Applicable standards: IEC 801-4, 801-5

Bolts for Flanges and Adapters

- Options permit bolts for flanges and adapters to be obtained in various materials
- Standard material is plated carbon steel per ASTM A449, Type 1

L4 Austenitic 316 Stainless Steel Bolts

L5 ASTM A 193, Grade B7M Bolts

L6 *Monel* Bolts

(2) Not applicable to fieldbus.

Rosemount 3051C *Coplanar* Flange and 3051T Bracket Option

B4 Bracket for 2-in. Pipe or Panel Mounting

- For use with the standard *Coplanar* flange configuration
- Bracket for mounting of transmitter on 2-in. pipe or panel
- Stainless steel construction with stainless steel bolts

Rosemount 3051H Bracket Options

B5 Bracket for 2-in. Pipe or Panel Mounting

- For use with the 3051H Pressure Transmitter for high process temperatures
- Carbon steel construction with carbon steel bolts

B6 B5 Bracket with SST Bolts

- Same bracket as the B5 option with Series 300 stainless steel bolts.

Traditional Flange Bracket Options

B1 Bracket for 2-in. Pipe Mounting

- For use with the traditional flange option
- Bracket for mounting on 2-in. pipe
- Carbon steel construction with carbon steel bolts
- Coated with polyurethane paint

B2 Bracket for Panel Mounting

- For use with the traditional flange option
- Bracket for mounting transmitter on wall or panel
- Carbon steel construction with carbon steel bolts
- Coated with polyurethane paint

B3 Flat Bracket for 2-in. Pipe Mounting

- For use with the traditional flange option
- Bracket for vertical mounting of transmitter on 2-in. pipe
- Carbon steel construction with carbon steel bolts
- Coated with polyurethane paint

B7 B1 Bracket with SST Bolts

- Same bracket as the B1 option with Series 300 stainless steel bolts

B8 B2 Bracket with SST Bolts

- Same bracket as the B2 option with Series 300 stainless steel bolts

B9 B3 Bracket with SST Bolts

- Same bracket as the B3 option with Series 300 stainless steel bolts

BA Stainless Steel B1 Bracket with SST Bolts

- B1 bracket in stainless steel with Series 300 stainless steel bolts

BC Stainless Steel B3 Bracket with SST Bolts

- B3 bracket in stainless steel with Series 300 stainless steel bolts

Shipping Weights

TABLE 15. Transmitter Weights without Options

Transmitter	Add Weight In lb (kg)
3051C	6.0 (2,7)
3051L	Table 16 on page 38
3051H	13.6 (6,2)
3051T	3.0 (1,4)

TABLE 16. 3051L Weights without Options

Flange	Flush lb. (kg)	2-in. Ext. lb (kg)	4-in. Ext. lb (kg)	6-in. Ext. lb (kg)
2-in., 150	12.5 (5,7)	—	—	—
3-in., 150	17.5 (7,9)	19.5 (8,8)	20.5 (9,3)	21.5 (9,7)
4-in., 150	23.5 (10,7)	26.5 (12,0)	28.5 (12,9)	30.5 (13,8)
2-in., 300	17.5 (7,9)	—	—	—
3-in., 300	22.5 (10,2)	24.5 (11,1)	25.5 (11,6)	26.5 (12,0)
4-in., 300	32.5 (14,7)	35.5 (16,1)	37.5 (17,0)	39.5 (17,9)
2-in., 600	15.3 (6,9)	—	—	—
3-in., 600	25.2 (11,4)	27.2 (12,3)	28.2 (12,8)	29.2 (13,2)
DN 50/PN 40	13.8 (6,2)	—	—	—
DN 80/PN 40	19.5 (8,8)	21.5 (9,7)	22.5 (10,2)	23.5 (10,6)
DN 100/ PN 10/16	17.8 (8,1)	19.8 (9,0)	20.8 (9,5)	21.8 (9,9)
DN 100/ PN 40	23.2 (10,5)	25.2 (11,5)	26.2 (11,9)	27.2 (12,3)

TABLE 17. Transmitter Options Weights

Code	Option	Add lb (kg)
J, K, L, M	Stainless Steel Housing(T)	3.9 (1,8)
J, K, L, M	Stainless Steel Housing (C, L, H, P)	3.1 (1,4)
M5	LCD display for Aluminum Housing	0.5 (0,2)
M6	LCD display for SST Housing	1.25 (0,6)
B4	SST Mounting Bracket for *Coplanar* Flange	1.0 (0,5)
B1 B2 B3	Mounting Bracket for Traditional Flange	2.3 (1,0)
B7 B8 B9	Mounting Bracket for Traditional Flange	2.3 (1,0)
BA, BC	SST Bracket for Traditional Flange	2.3 (1,0)
B5 B6	Mounting Bracket for 3051H	2.9 (1,3)
H2	Traditional Flange	2.4 (1,1)
H3	Traditional Flange	2.7 (1,2)
H4	Traditional Flange	2.6 (1,2)
H7	Traditional Flange	2.5 (1,1)
FC	Level Flange—3 in., 150	10.8 (4,9)
FD	Level Flange—3 in., 300	14.3 (6,5)
FA	Level Flange—2 in., 150	10.7 (4,8)
FB	Level Flange—2 in., 300	14.0 (6,3)
FP	DIN Level Flange, SST, DN 50, PN 40	8.3 (3,8)
FQ	DIN Level Flange, SST, DN 80, PN 40	13.7 (6,2)

HART Protocol C1 Option Configuration Data Sheet

★ = Default Value(1)

CONFIGURATION DATA SHEET

Customer: _____ P.O. No.: _____

Model No.: _____ Line Item: _____

SST Tag No.: _____

Software Tag: |__|__|__|__|__|__|__|__|

OUTPUT INFORMATION: (Software Selectable)

4 mA (1, 0.8 Volts) = _____ 0 ★

20 mA (5, 3.2 Volts) = _____ Upper Range Limit ★

Pressure Units =
☐ inH_2O(2) ☐ psi (3) ★ ☐ Pa ☐ ftH_2O
☐ inHg ☐ bar ☐ kPa ☐ g/cm^2
☐ mbar ☐ Torr ☐ mmH_2O ☐ inH_2O at 4 °C(5)
☐ Atm ☐ kg/cm^2 ☐ mmHg ☐ mmH_2O at 4 °C (5)

Output = ☐ Linear ★ ☐ Square Root (For DP transmitters only)

Damping(4)=
☐ 0.00 sec. ☐ 0.05 sec. ☐ 0.10 sec. ☐ 0.20 sec. ☐ 0.40 sec.★
☐ 0.80 sec. ☐ 1.60 sec. ☐ 3.20 sec. ☐ 12.8 sec. ☐ 25.6 sec.

TRANSMITTER INFORMATION: (Software Selectable)

Descriptor(4): |__|__|__|__|__|__|__|__|__|__|__|__|__|__|__|__|(16 characters)

Message(4): |__|__|__|__|__|__|__|__|__|__|__|__|__|__|__|__|__|__|__|__|__|__|__|__|__|__|__|__|__|__|__|__|
(32 characters)

Date(4): ☐☐/☐☐/☐☐
Day Month Year

Local Span and Zero: ☐ Enabled ★ ☐ Disabled

(1) Default values may be different outside the U.S. A. Consult an Emerson Process Management Representative for details.

(2) inH20 for CD/CG ranges 1-3

(3) psi for CD/CG range 4 and 5, all CA ranges

(4) C1 option required for configuration of this parameter.

(5) Not available with low power output.

BA 201P/00/en/12.03
Software version 1.1/1.2
52022183

cerabar M
HART
Pressure Transmitter

Operating Instructions

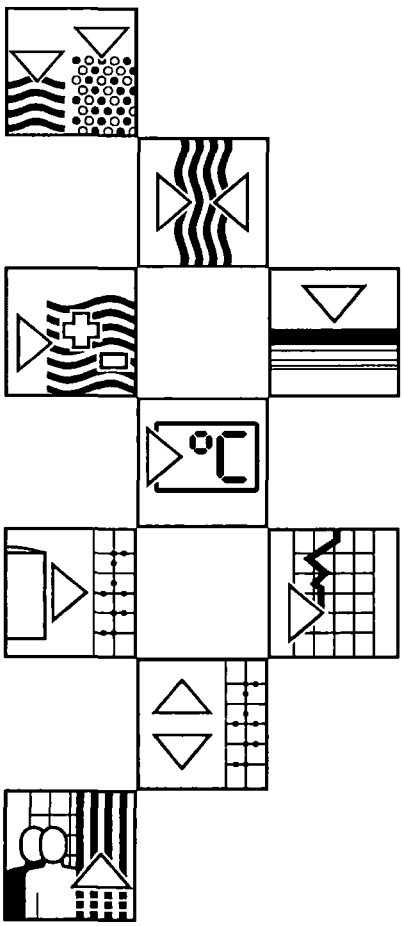

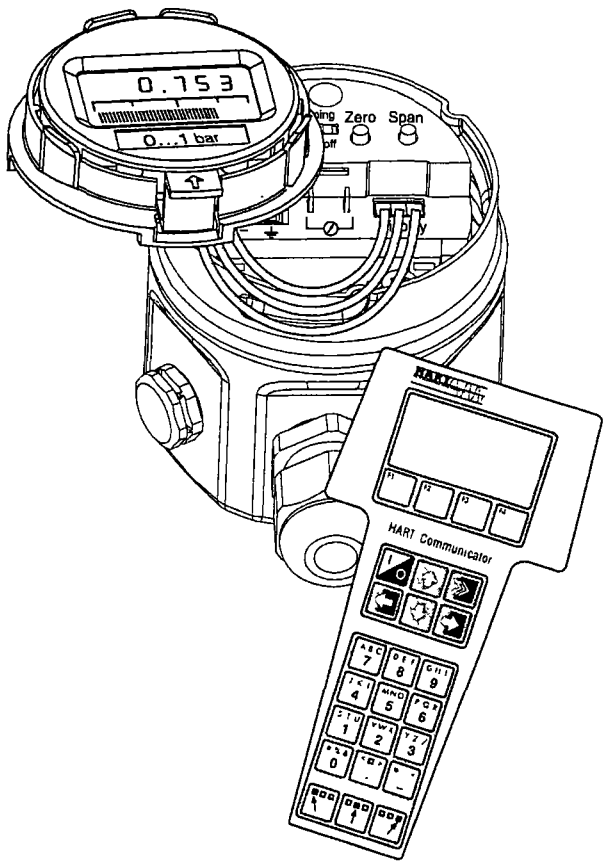

Endress+Hauser

The Power of Know How

Short Operating Instructions

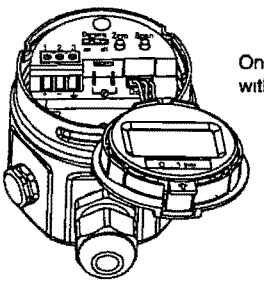

On-site operation
with digital display

Operation:
- Function of the display
  Chap. 3.2
- Position and function
  of the operating elements
  on the electronic insert
  Chap. 3.3

Commissioning:
- Chap. 4.1

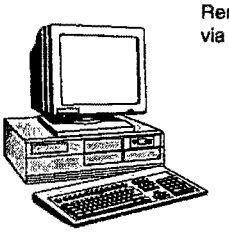

Remote operation
via HART protocol

Operation:
- via Commuwin II
  Chap. 3.4
- via Universal HART
  Communicator
  DXR 275
  Chap. 3.5

Commissioning:
- Chap. 4.2

Software History

Software version	Valid Operating Instructions (BA)	Device and software no.	Software changes	BA changes
1.0	04.99	8010	–	–
1.1/1.2	04.02	8011/8012	On site commissioning: Delayed adopting of Zero, Span and bias pressure	Chapter 4.1
			Reset to factory setting on site. Option of resetting using keys	Chapter 4.1

Table of Contents

Software History 2

Notes on Safety 4

1 Introduction 6

2 Installation 7
2.1 Installation instructions for PMC 41, PMC 45, PMP 41 and PMP 45 7
2.2 Installation instructions for PMP 46 and PMP 48 8
2.3 Housing versions 10
2.4 Mounting accessories 11
2.5 Electrical connection 12

3 Operation 15
3.1 Access to the operating elements . . 15
3.2 Function of the display 16
3.3 Position and function of the operating elements on the electronic insert 16
3.4 Operating via Commuwin II 17
3.5 Operating via Universal HART Communicator DXR 275 18

4 Commissioning 19
4.1 On-site commissioning 19
4.2 Commissioning and operation using communication 21
4.3 Locking/unlocking the operation 23
4.4 Information on measuring point 24

5 Diagnosis and Trouble-Shooting . . 25
5.1 Diagnosis of errors and warnings 25
5.2 Current simulation 26
5.3 Reset 26

6 Maintenance and Repair 28
6.1 Maintenance 28
6.2 Repair 28
6.3 Returning for repair 28
6.4 Repair of certified devices 29
6.5 Spare parts 29
6.6 Mounting the digital display 34
6.7 Changing the electronic insert 35
6.8 Changing the sensor 37
6.9 Changing the process seal 37
6.10 Sensor calibration 39

7 Technical Data 40
7.1 Dimensions 44

8 Operating Matrix 45

Index 46

Declaration of Contamination 47

Notes on Safety

Approved usage

The Cerabar M is a pressure transmitter that is used for gauge pressure or absolute pressure measurement, depending on the version.

Installation, commissioning, operation

The Cerabar M has been designed to operate safely in accordance with current technical, safety and EU standards. If installed incorrectly or used for applications for which it is not intended, however, it is possible that application-related dangers may arise, e g. product overspill due to incorrect installation or calibration. For this reason, the device must be installed, connected, commissioned, operated and maintained by personnel that are authorised and suitably qualified. This Operating Instructions must have been read and understood, and the instructions followed. Modifications and repairs to the device are permissible only when they are expressly approved in the Operating Instructions.

Please pay particular attention to the technical data on the nameplate. The MWP (maximum working pressure) is specified on the nameplate. The value refers to a reference temperature of 20°C (68°F) or 100°F for ANSI flanges.

- Test pressure (over pressure limit OPL) = MWP (nameplate) x 1.5
- The pressure values permitted at higher temperatures can be found in the following standards: EN 1092-1: 2001 Tab. 18; ASME B 16.5a – 1998 Tab. 2-2.2 F316; ASME B 16.5a – 1998 Tab. 2.3.8 N10276; JIS B2201

Explosion hazardous areas

If the device is to be installed in a hazardous area, then national and local regulations must be observed. The device can be supplied with the following certificates as listed in the table below. The certificates are identified by the first letter of the order code on the nameplate (see table below).

- Ensure that all personnel are suitably qualified.
- Observe the specifications in the certificate as well as national and local regulations.
- The requirements regarding measurement and safety equipment at the measuring points must be met.

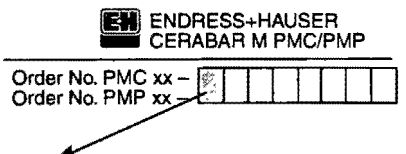

Certificates for applications in explosion hazardous areas

Code	Certificate	Type of protection
R	Standard	None
G	DMT	ATEX II 1/2 G EEx ia IIC T4/T6
K	DMT	PMC 41, PMP 41/45/46/48: ATEX II 1/2D EEx ia IIC T4/T6
L	DMT	PMC 41, PMP 41/45/46/48: ATEX II 1/3D (none -Ex power supply)
H	DMT	ATEX II 2 G EEx ia IIC T4/T6
N	ATEX	ATEX II 3 G EEx nA II T5 (Zone 2)
C	CSA	General Purpose
S	CSA	IS (suitable for Div. 2) Class I, II, III, Div. 1, Groups E.. G PMC 45: Groups A. .D, G + Coal Dust
T	CSA	PMC 41, PMP 41/45/46/48 Class I, Div 2, Groups A. .D, Class II, III, Div.1, Groups E. .G
P	FM	IS Class I, II, III, Div 1, Groups A ..G
M	FM	PMC 41, PMP 41/45/46/48. DIP, Class II, III, Div. 1, Groups E...G
V	TIIS	TIIS Ex ia IIC T6

Safety Conventions and Symbols

In order to highlight safety-relevant or alternative operating procedures in the manual, the following conventions have been used, each indicated by a corresponding icon in the margin.

Safety conventions

Symbol	Meaning
Hinweis!	**Note!** Notes draw attention to activities or procedures that can have a direct influence on operation or trigger an unforeseen device reaction if they are not carried out properly.
Achtung!	**Caution!** Cautions draw attention to activities or procedures that can lead to persons being injured or to incorrect device operation if they are not carried out properly.
Warnung!	**Warning!** Warnings draw attention to activities or procedures that can lead to persons being seriously injured, to safety risks or to the destruction of the device if they are not carried out properly.

Explosion protection

	Explosion protected, type examined operating equipment If this icon is on the device's nameplate, the device can be used in hazardous areas
	Hazardous area This symbol identifies the hazardous area in the diagrams in these Operating Instructions. – Devices that are used in hazardous areas or cables for such devices must have the corresponding type of protection
	Safe area (non-hazardous areas) This symbol identifies the non-hazardous area in the diagrams in these Operating Instructions. – Devices in non-hazardous areas must also be certified if connection cables run through a hazardous area.

Electrical symbols

	Direct current A terminal at which direct current voltage is present or through which direct current flows.
	Alternating current A terminal at which (sinusoidal) alternating voltage is present or through which alternating current flows
	Ground connection A grounded terminal that, from the user's viewpoint, is already grounded via a grounding system.
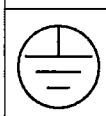	**Protective earth connection** A terminal that has to be grounded before other connections can be made.
	Equipotential connection A connection that has to be connected to the machine's grounding system. This can be, for example, a potential matching line or a star-shaped grounding system, depending on national or company practice.

1 Introduction

Application

The Cerabar M pressure transmitters measure the pressure of gases, vapours, liquids and dusts and are used in all areas of chemical and process engineering.

Operating principle

Ceramic measuring cell
The system pressure acts directly on the rugged ceramic diaphragm of the pressure sensor deflecting it by a maximum of 0.025 mm (0.0098 in). A pressure-proportional change in the capacitance is measured at the electrodes of the ceramic substrate and diaphragm. The measuring range is determined by the thickness of the ceramic diaphragm.

Metal measuring cell
The process pressure deflects the separating diaphragm with a fill fluid transmitting the pressure to a resistance bridge. The bridge output voltage, which is proportional to pressure, is then measured and processed.

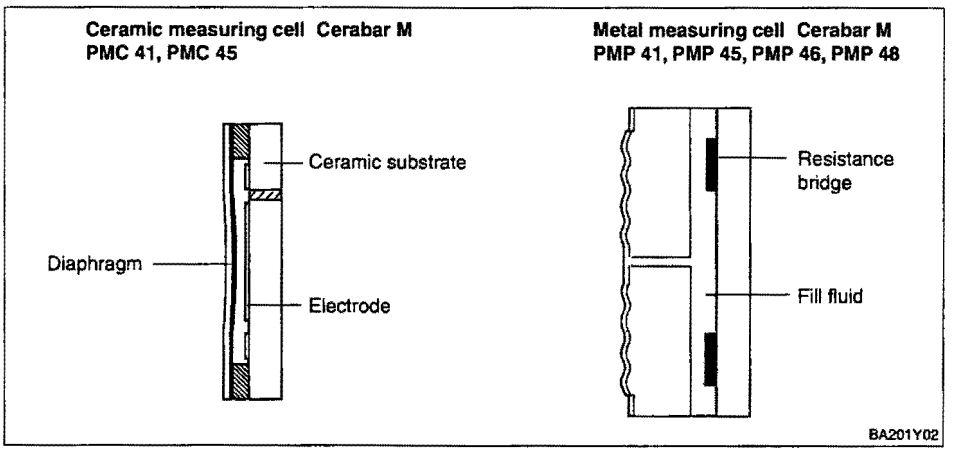

Figure 1.1
Structure of the measuring cell

Measuring system

The complete measuring system consists of:
- A Cerabar M pressure transmitter with current output 4...20 mA with superposed digital signal (HART protocol) and
- 11.5...45 VDC power supply, in Ex ia area 11.5...30 VDC.

The measuring system can be operated by:
- A digital display for operation and measured value interrogation on site,
- The Universal HART Communicator DXR 275 Handheld Terminal,
- An operating program, e.g. Commuwin II from Endress+Hauser.

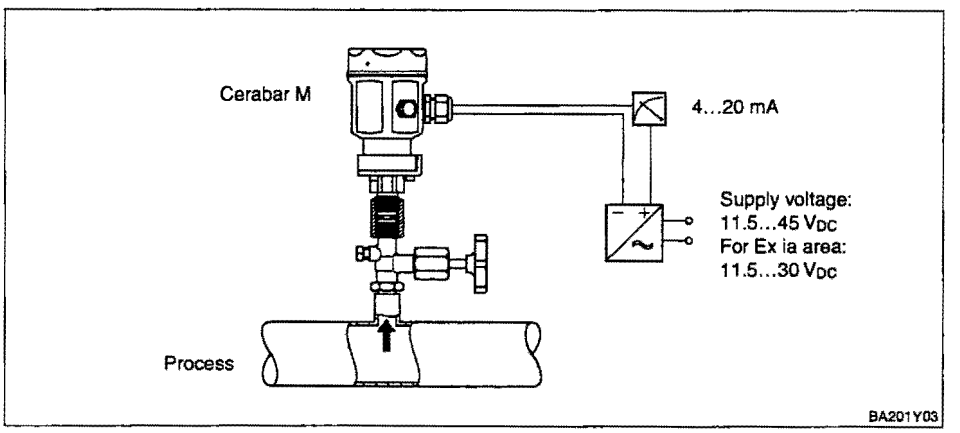

Figure 1.2
Measuring system

2 Installation

This chapter describes:
- The mechanical installation of Cerabar M with and without a diaphragm seal
- The electrical connection.

2.1 Installation instructions for PMC 41, PMC 45, PMP 41 and PMP 45

PMC 41, PMC 45, PMP 41, PMP 45 without diaphragm seal

The Cerabar M without a diaphragm seal is mounted in the same way as for manometers (DIN EN 839-2). The use of shut-off valves and pigtails is recommended. The orientation depends upon the application.

- Measurement in gases:
  Mount on the shut-off valve above the tapping point.

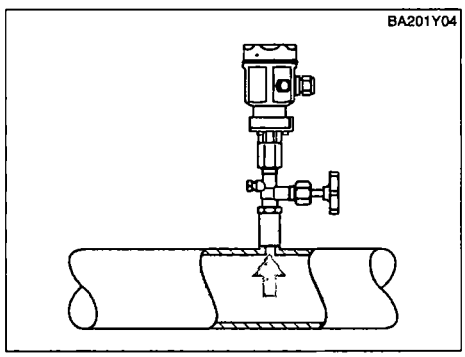

Figure 2.1
Mounting on shut-off valve for measuring in gases

- Measurement in vapour:
  Mount with pigtail below the tapping point.
  The pigtail reduces the temperature in front of the diaphragm to almost ambient temperature. Before start-up, the pigtail must be filled with a fill fluid (e.g. water).

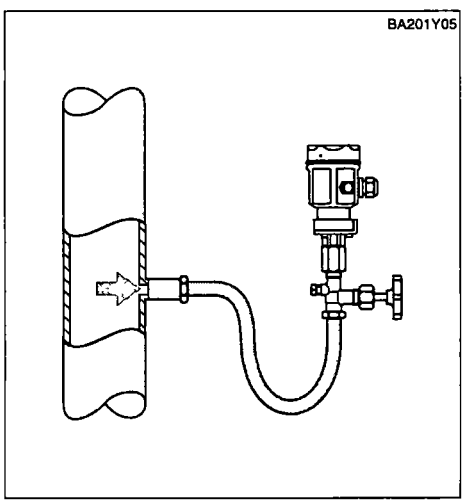

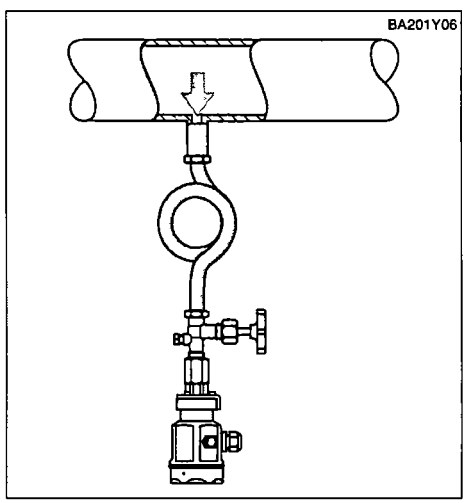

Figure 2.2
Left:
Mounting with U-shaped pigtail for measuring in vapour
Right:
Mounting with circular pigtail for measuring in vapour

- Measurement in liquids:
  Mount on the shut-off valve below the tapping point or at the same height.

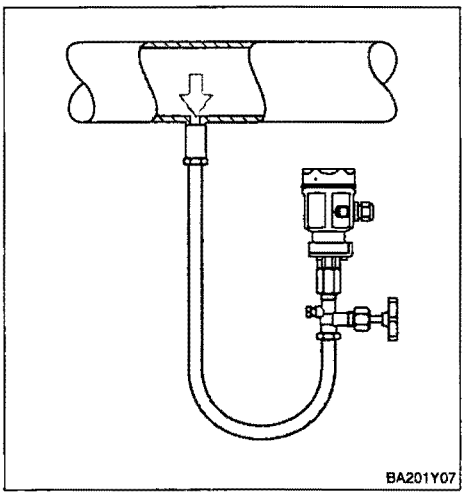

Figure 2.3
Mounting on shut-off valve for measuring in liquids

2.2 Installation instructions for PMP 46 and PMP 48

PMP 46
PMP 48
with diaphragm seal

The Cerabar M with diaphragm seal is screwed in, flanged or clamped, depending on the type of diaphragm seal.

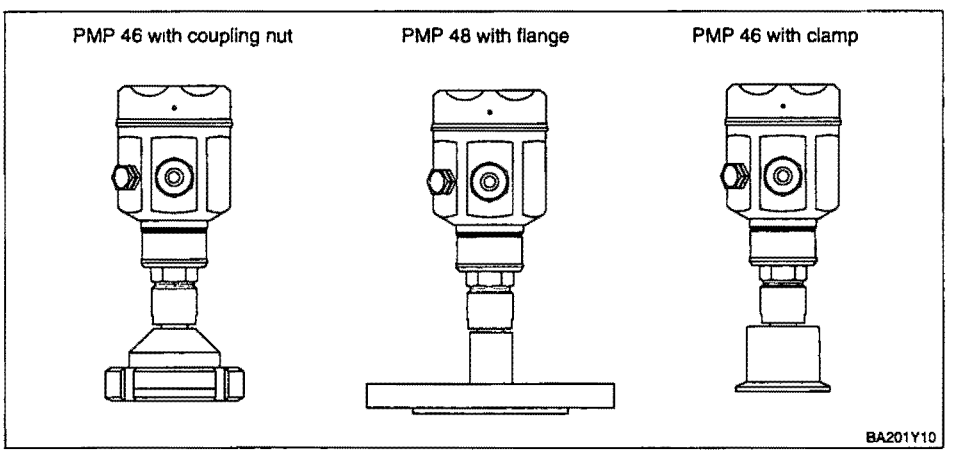

Figure 2.4
Diaphragm seal versions

- The protective cap of the diaphragm seal should only be removed just before installation in order to protect the diaphragm.
- The diaphragm of the diaphragm seal must not be dented or cleaned with pointed or hard objects.
- The diaphragm seal and the pressure sensor together form a closed, oil-filled calibrated system. The following rules should be observed:
  - The filling hole is sealed and is not to be opened.
  - The device should only be turned by the diaphragm seal at the point provided and not by the housing.

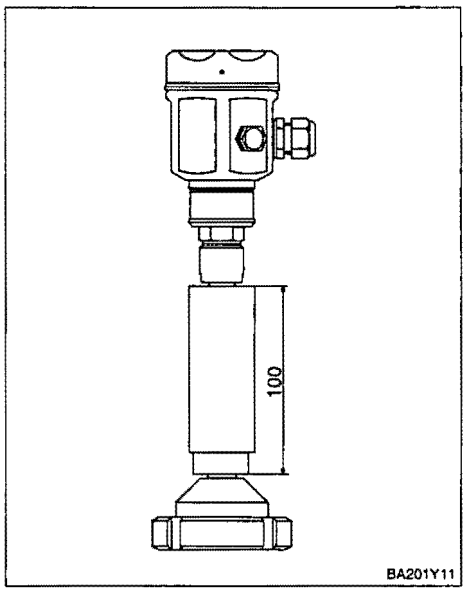

Figure 2.5
Mounting with temperature spacer

PMP 46, PMP 48
Mounting with temperature spacers

The use of temperature spacers is recommended for constant extreme medium temperatures of more than 150 °C that can cause the maximum permissible ambient temperature of +85°C (+185°F) to be exceeded.

- Note when installing that the temperature spacer increases the maximum height by 100 mm (3 94 in).
- Due to the water column in the temperature spacer, the increased height also causes a zero point shift of approx. 10 mbar (0.15 psi). For position calibration (only display) or zero offset, please see chapter 4.1

PMP 46, PMP 48
Mounting with capillary tubing

To protect from extremely high temperatures (up to 350 °C medium temperature), moisture or vibration, or where the mounting location is not easily accessible, the housing of the Cerabar M can be mounted with a capillary tube to one side of the measuring point.
A bracket for mounting on a wall or pipe is available for this.

- Material. AISI 304
  Order No.. 52001402

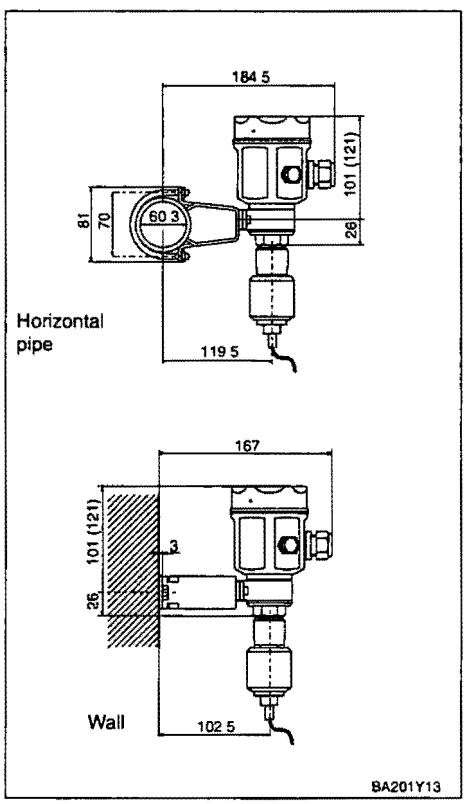

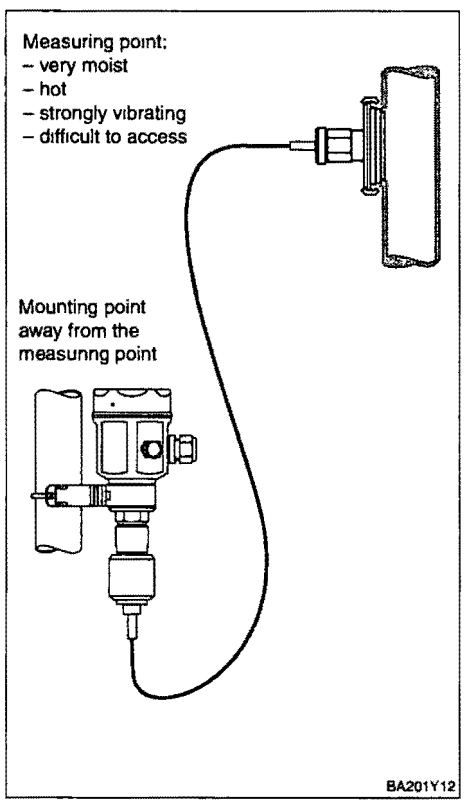

Figure 2.6
Left:
Mounting with bracket
Right:
Mounting with capillary tubing and bracket away from the measuring point.
Values in brackets apply to devices with a raised cover.

2.3 Housing versions

- Stainless steel housing
  Type F 15, material 1.4404 (AISI 316L), surface roughness Ra < 0.8 µm.
- Aluminium housing
  Type F 18, material die-cast aluminium with powder coating on polyester base.

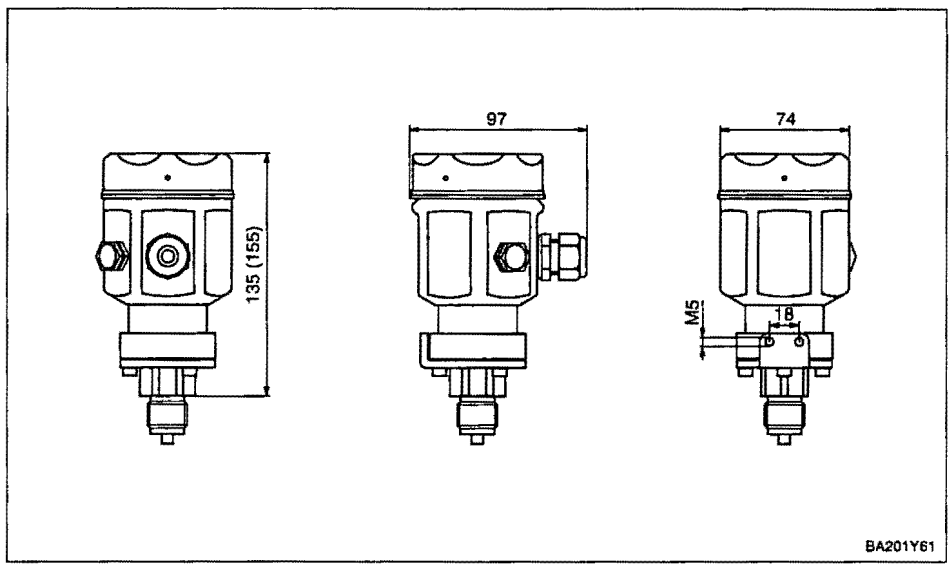

Figure 2.7
Cerabar M
with stainless steel housing.
Values in brackets apply to
devices with a raised cover.
All dimensions are in mm.

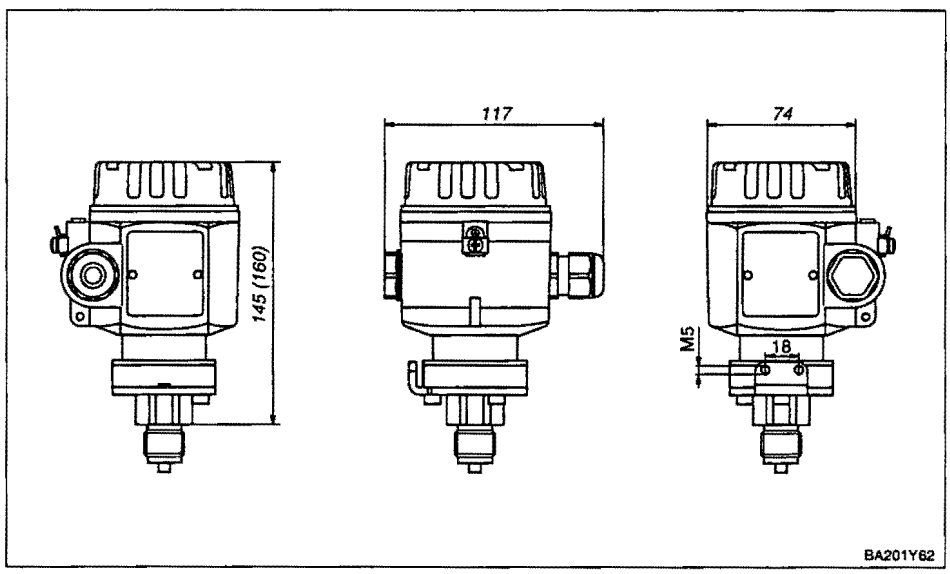

Figure 2.8
Cerabar M with
aluminium housing.
Values in brackets apply to
devices with a raised cover.
All dimensions are in mm.

2.4 Mounting accessories

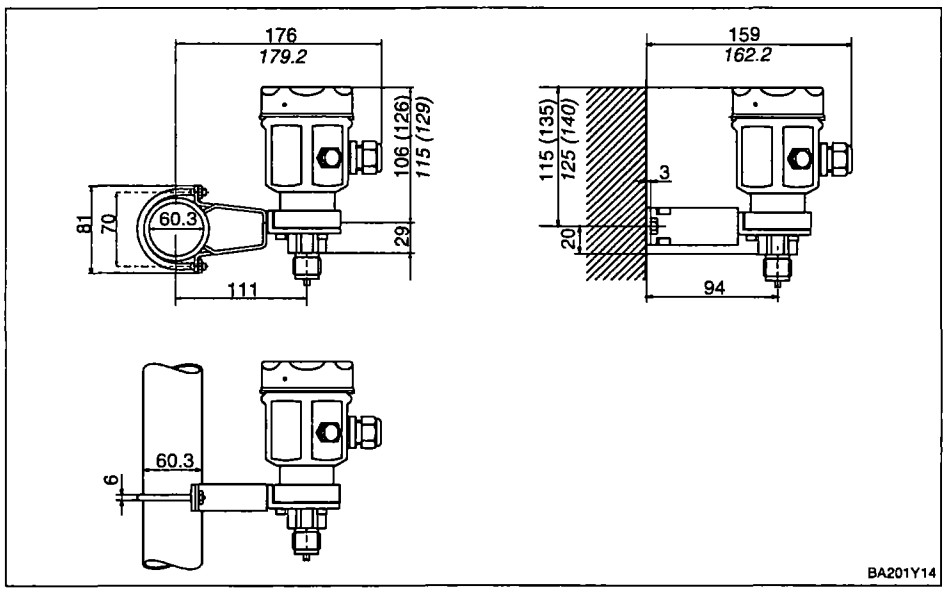

PMC 41
Wall and pipe mounting with mounting bracket

Figure 2.9
Mounting with bracket
Left: on a pipe
Right: on a wall

Values in brackets apply to devices with a raised cover.
Values in italics apply to devices with an aluminium housing.
All dimensions are in mm.

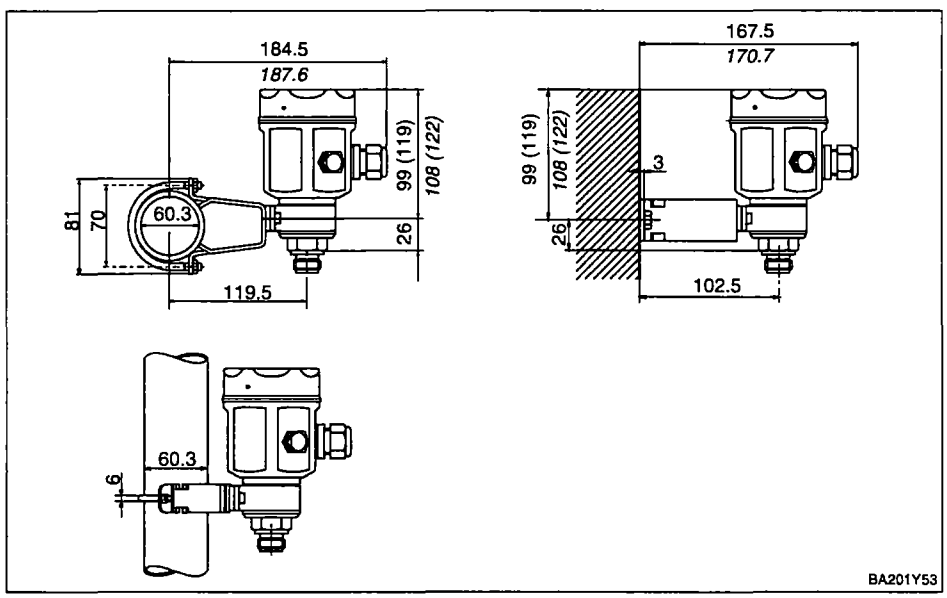

PMP 41
Wall and pipe mounting with mounting bracket

Figure 2.10
Mounting with bracket
Left: on a pipe
Right: on a wall

Values in brackets apply to devices with a raised cover.
Values in italics apply to devices with an aluminium housing.
All dimensions are in mm.

2.5 Electrical connection

We recommend that you use twisted, screened two-core cables as connecting wires.
Max. wire cross-section area: 2.5 mm^2 fixed conductor
The supply voltage is:
- 11.5...45 V_{DC}
- Ex ia area: 11.5...30 V_{DC}

Protective circuits against reverse polarity, HF influences and overvoltage peaks are installed (see also Technical Information TI 241F "EMC Test Principles").
A test signal can be taken via the appropriate terminal lugs without interrupting measurement.

Cable connection

- Unscrew the cover.
- If present, remove the retaining ring with digital display. To do so:
  - Push up the latch with the arrow until the grip of the retaining ring is audibly released.
  - Release the retaining ring carefully to prevent the display cables from breaking. The plug of the display can remain plugged in.
- Insert the cable through the cable entry.
- Connect cable cores in accordance with connection diagram.
- Where appropriate, re-mount the retaining ring with digital display. The grip of the retaining ring clips in with an audible click.
- Screw down the cover.

Observe national regulations for applications in hazardous areas.

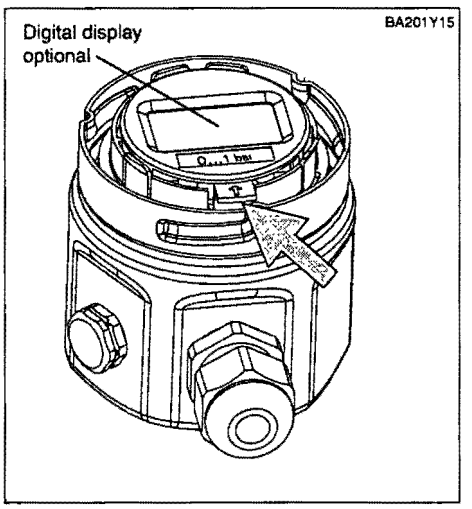

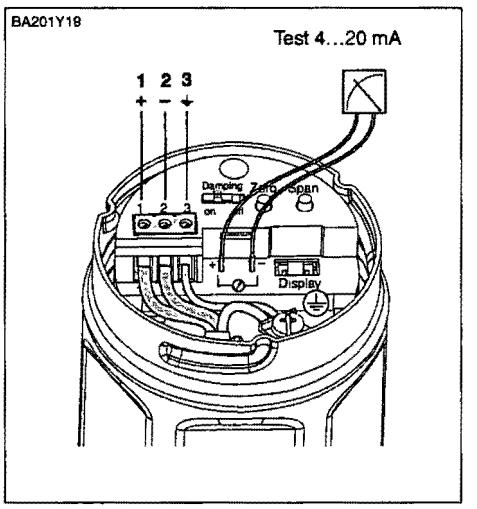

Figure 2.11
Left:
Removing cover and retaining ring with digital display. To release the retaining ring from the electronic insert, push latch with arrow upwards.
Right: Connection diagram

Note!
Terminal 3 on the electronic insert is for grounding and is already wired internally. If the connection cable has a screening cable or earth lead within it, then this may only be connected to the internal grounding terminal of the housing and not to terminal 3. The terminals are designed to take one wire each.

Note!

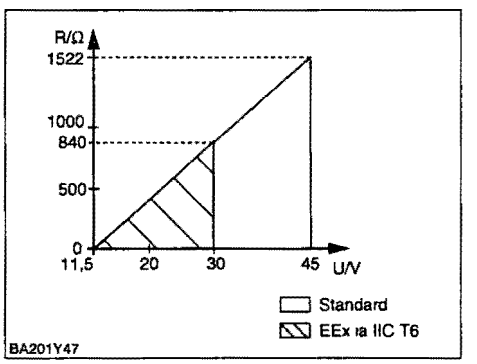

Figure 2.12
Load diagram

M12 plug

Use M12 plugs in degree of protection IP 68 for hygienic applications or for moist operating locations. Endress+Hauser offers a plug socket for self-made connections (Order No. 52006263).

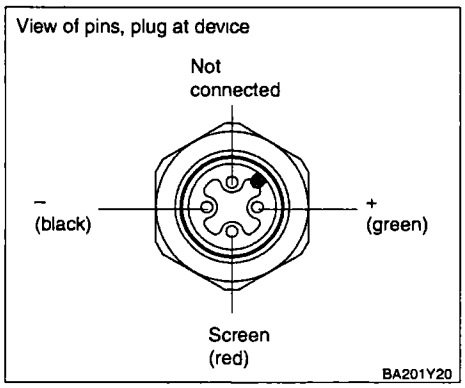

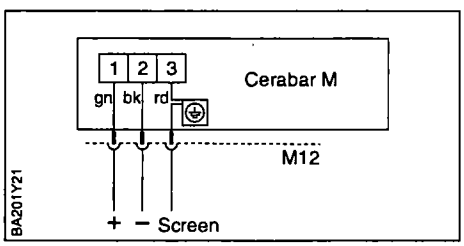

Versions:
- PM ☐ 4☐ – ☐ L1 ☐☐ ☐ H ☐ ☐☐ ☐
- PM ☐ 4☐ – ☐ L1 ☐☐ ☐ J ☐ ☐☐ ☐
- PM ☐ 4☐ – ☐ L2 ☐☐ ☐ H ☐ ☐☐ ☐
- PM ☐ 4☐ – ☐ L2 ☐☐ ☐ J ☐ ☐☐ ☐

Harting plug

Use Harting plugs for power plants or similar applications.

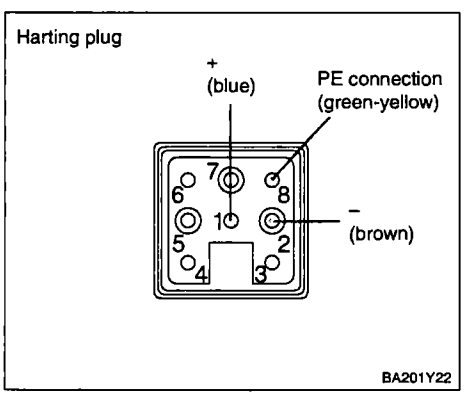

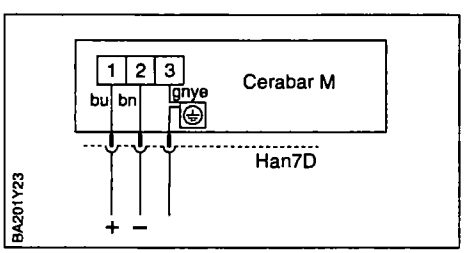

Versions.
- PM ☐ 4☐ – ☐ H1 ☐☐ ☐ H ☐ ☐☐ ☐
- PM ☐ 4☐ – ☐ H1 ☐☐ ☐ J ☐ ☐☐ ☐
- PM ☐ 4☐ – ☐ H2 ☐☐ ☐ H ☐ ☐☐ ☐
- PM ☐ 4☐ – ☐ H2 ☐☐ ☐ J ☐ ☐☐ ☐

Note!
The cover of the stainless steel housing is slightly greased at the factory to make sure that it is easily screwed on and off. Endress+Hauser recommends you regrease the sealing surfaces occasionally. When doing so, however, make sure that the grease does not penetrate the sealing groove of the housing.

Note!

DXR 275 Handheld terminal connection

- Do not change the DXR 275 handheld terminal's battery in hazardous areas.
- The following applies to a Cerabar M with FM or CSA certificate: Electrical connection in accordance with "Control drawing" (enclosed in the Cerabar M's packaging).
- To transfer the communication signal without errors, there must be a communication resistance of at least 250 Ω between the connection points and the power supply.

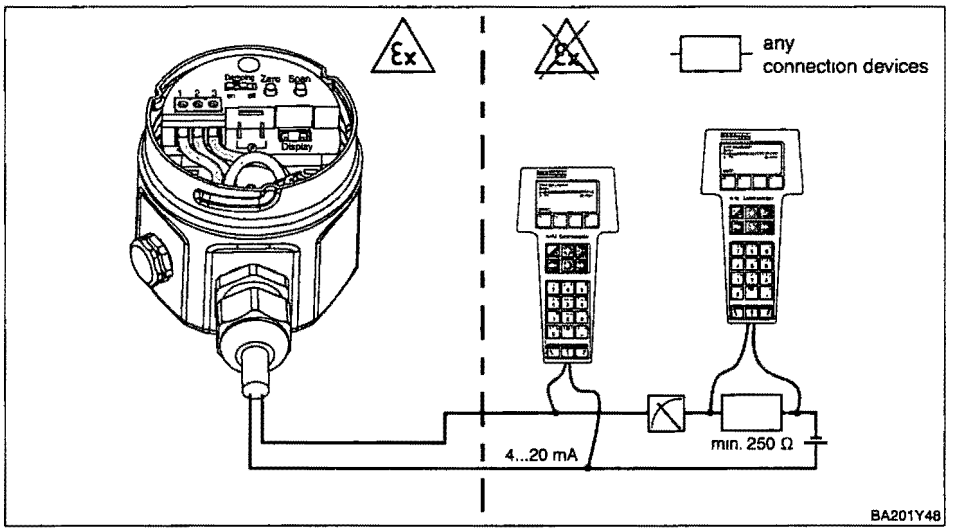

Figure 2.13
The handheld terminal can be connected anywhere along the 4...20 mA cable.
Use intrinsically safe voltage source in Ex ia area (e.g. RN 221N).

Commubox FXA 191 connection for operation via Commuwin II

The Commubox FXA 191 connects the Cerabar M with HART protocol to the RS 232 C serial interface of a Personal Computer. This makes it possible to operate the Cerabar M remotely using the Endress+Hauser operating matrix.
The Commubox FXA 191 is suitable for use in intrinsically safe signal circuits.

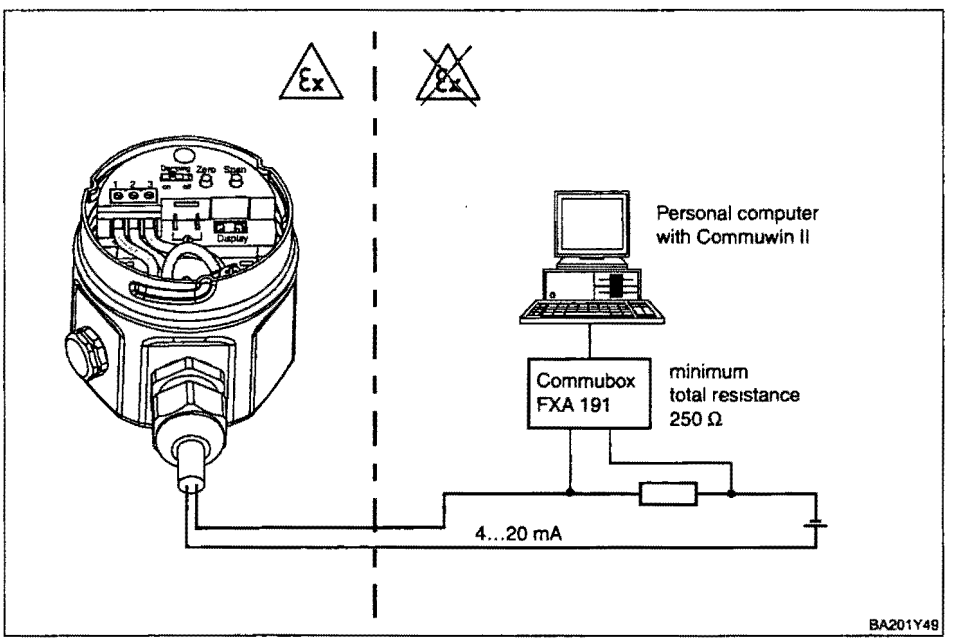

Figure 2.14
The Commubox can be connected anywhere along the 4...20 mA cable.

3 Operation

Contents

This chapter describes:
- Mounting the digital display (optional)
- Function of the digital display (optional)
- Position and function of the operating elements on the electronic insert
- Operating via Commuwin II
- Operating via Universal HART Communicator DXR 275

3.1 Access to the operating elements

Lifting digital display (optional)

The digital display is delivered already mounted when it is ordered with the device. In this case the digital display must be released from the electronic insert with the retaining ring before operating.
If you want to order a digital display (order no. 52002644) at a later date, then please observe the instructions in Chapter 6 6 "Mounting the digital display".

Releasing the display:
- Push up the latch with the arrow until the grip of the retaining ring on the electronic insert is audibly released.
- Release the retaining ring and lift off carefully to prevent the display cables from breaking.
- For reading the display value during operation, attach the digital display to the edge of the housing or let it hang down loosely by its cable next to the housing.

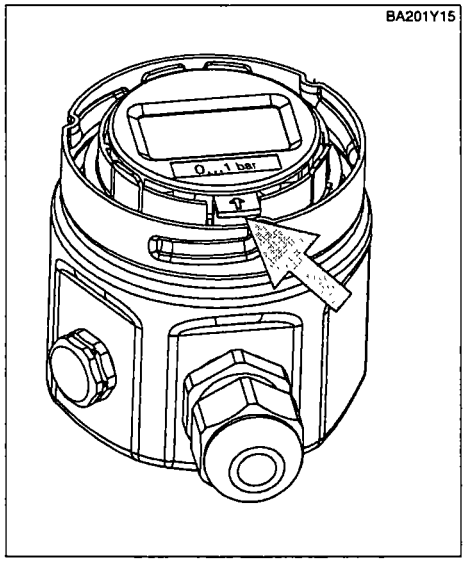

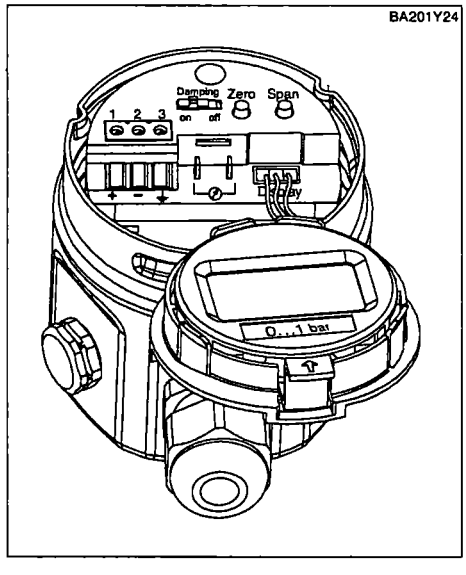

Figure 3.1
Left:
To release the retaining ring push latch with arrow upwards.
Right:
Lift off retaining ring with display for operation.

3.2 Function of the display

The digital display (optional) has two display modes:
- Display in measurement mode: This is shown as standard
- Display in calibration mode: This is shown after pressing the Zero or Span key once. It returns automatically to measurement mode display after 2 seconds.

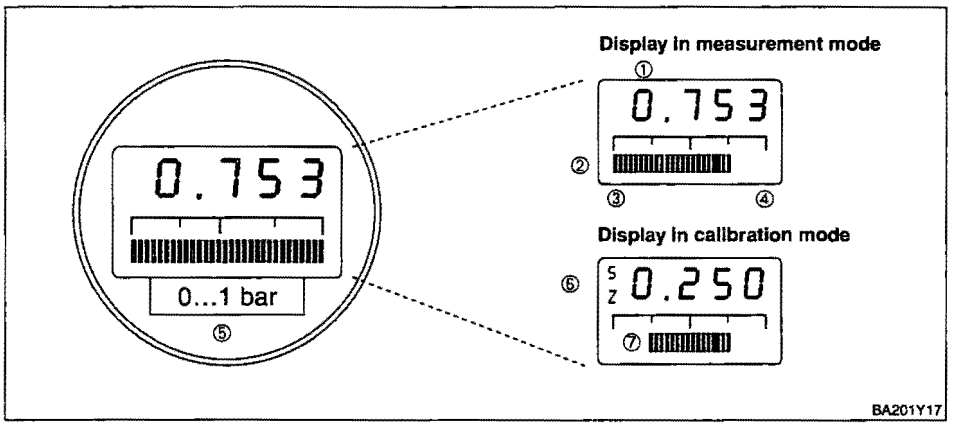

Figure 3.2
Function of the display

Display in measurement mode
① 4-digit display of measured values and input parameters
② Bar graph of measured value
③ Lower range value
④ Upper range value
⑤ Nominal measuring range

Additional display in calibration mode
⑥ Displays the calibration point (Z=Zero or S=Span)
⑦ Set measuring range within the measurement limits

3.3 Position and function of the operating elements on the electronic insert

Position of the operating elements

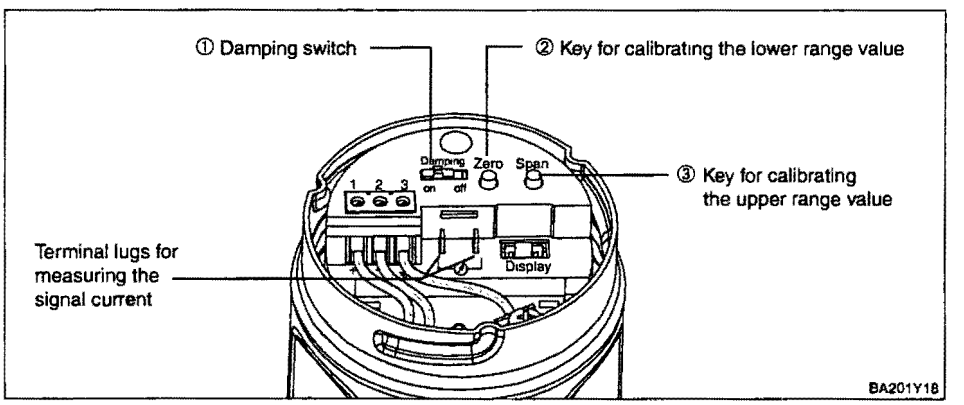

Figure 3.3
Position of the operating elements

Function of the operating elements

No.	Operating element	Function
①	Damping switch	Switch position "off". Damping 0 s Switch position "on". Damping 2 s It is possible to enter a damping value between 0. .40 s via communication
②	Key for lower range value	The value currently saved for the lower range value e g. 4 mA (zero point) is displayed and the acting pressure is taken as the lower range value.
③	Key for upper range value	The value currently saved for the upper range value e g 20 mA is displayed and the acting pressure is taken as the upper range value.
②+③	Bias key combination: Key for lower range value **and** key for upper range value	The value currently saved for the bias pressure is displayed and the acting pressure is taken as the bias pressure.
②+③	Reset key combination. Key for lower range value **and** key for upper range value	The reset is activated when both keys are held down for at least 7 s.

3.4 Operating via Commuwin II

With the Commuwin II display and operating programme, Cerabar M can be calibrated and operated as follows:

- Via matrix operation or
- graphic operation

For this, the corresponding server (e.g. HART or ZA 672) must be activated. For a description of the Commuwin II operating program, see Operating Instructions BA 124F.

Operating matrix

In this operating mode in the device parameters menu, you can access advanced Cerabar M functions.
- Each row is assigned to a function group.
- Every field represents a parameter.

Enter the setting parameters in the appropriate fields.

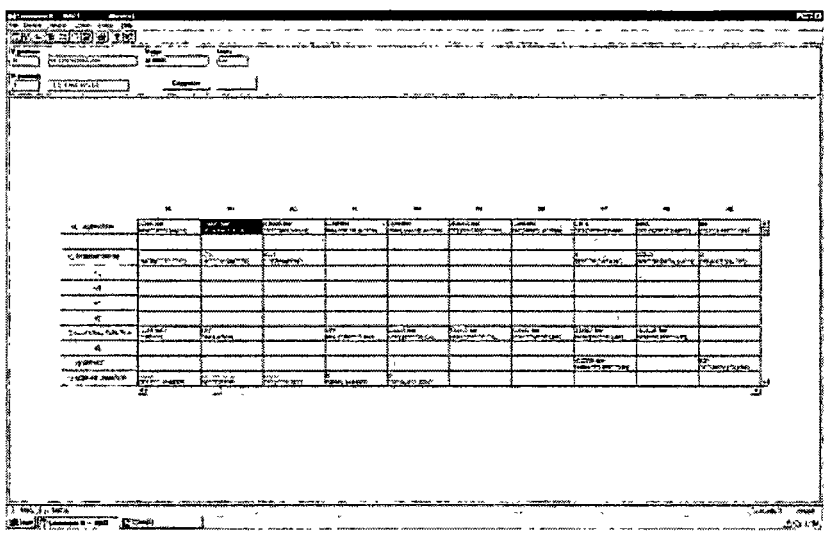

Figure 3.4
Device data menu in Commuwin II

Graphic operation

In this operating mode, enter the setting parameters for defined configuration procedures in the corresponding boxes.

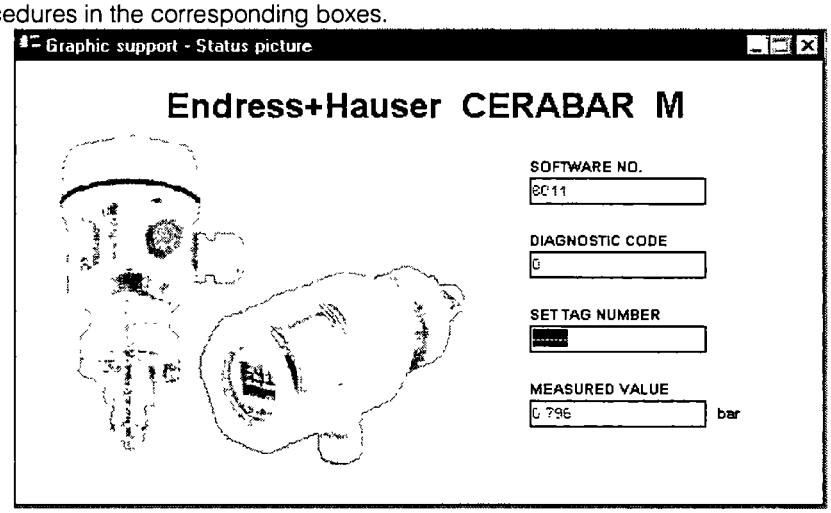

Figure 3.5
Device data menu in Commuwin II

3.5 Operating via Universal HART Communicator DXR 275

When operating via HART protocol, a menu control system derived from the matrix is used (see also Operating Instructions for the handheld terminal)
- The "Select group" menu calls up the matrix.
- The menu headers are displayed.
- The parameters are set via sub-menus.

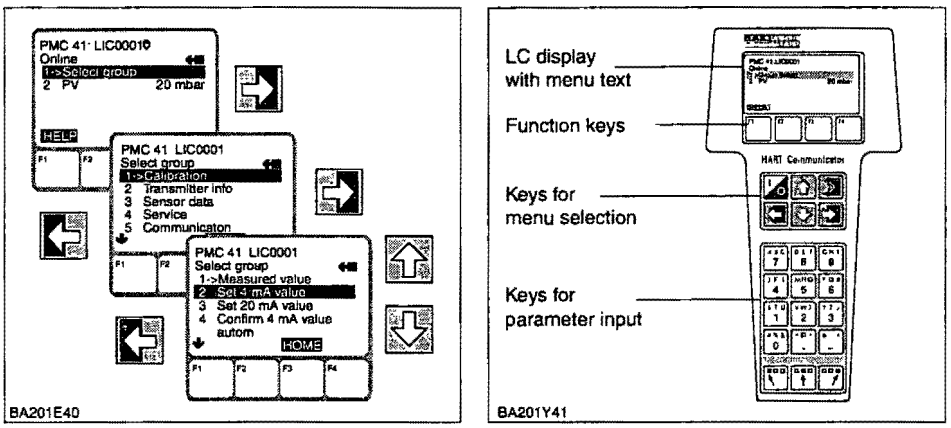

Figure 3.6
Left:
Menu control with the DXR 275
right:
Universal HART Communicator DXR 275 Handheld Terminal

The electrical connection of the Universal HART Communicator DXR 275 handheld terminal is described in chapter 2.5, the step-by-step commissioning of the measuring point in chapter 4.

4 Commissioning

Contents

This chapter contains the following information:
- On-site commissioning using keys on the electronic insert
- Commissioning and operation via communication (Universal HART Communicator DXR 275 handheld terminal or Commuwin II)
- Locking and unlocking the measuring point
- Measuring point information

4.1 On-site commissioning

Preparatory work

- Connect the Cerabar M electrically (Chap. 2.5 "Electrical connection").
- Ensure that a pressure can be generated within the required measuring range.
- If you have not installed a digital display, then connect a multimeter (4.. 20 mA) to the appropriate terminal lugs.
- If you have installed a digital display, the calibration values appear there.

Damping

The damping τ affects the speed with which the output signal and the digital display react to changes in pressure
The damping is set via a switch on the electronic insert.

- Switch position **off**: Damping 0 s
- Switch position **on**. Damping 2 s

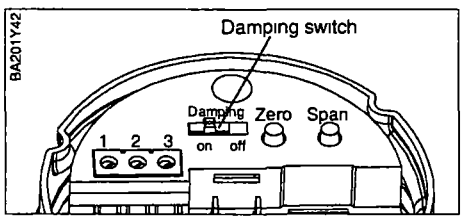

Figure 4.1
Position of the damping switch

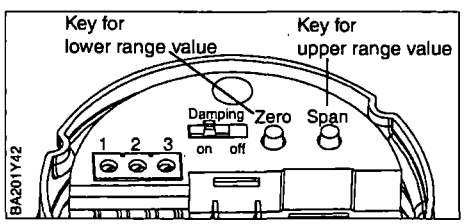

Figure 4.2
Position of keys for calibrating lower and upper range value

Calibrating lower range value

Use the "Zero" key to call up the lower range value currently saved or to calibrate the upper range value.

* Digital display optional

- Calling-up lower range value:
  Press the "Zero" key. The current calibration value appears in the digital display* and remains there for approx. 2 s after releasing the key.
- Calibrating lower range value:
  1. Specify the exact pressure for the lower range value (zero point).
  2. Press the "Zero" key. The calibration value currently saved appears in the digital display*.
  3. Release the key and press the key a second time within approx. 2 s. Hold down the key for 3 to 4 seconds until the "Z" symbol* stops flashing. The available pressure is now adopted as the new lower range value.

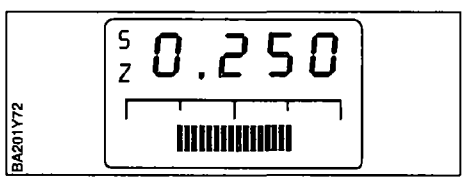

Figure 4.3
Digital display: Left, the "S" and the "Z" symbol

Calibrating upper range value
*Digital display optional

Use the "Span" key to calibrate the upper range value:
1. Specify the exact pressure for the upper range value.
2. Press the "Span" key. The calibration value appears in the digital display*.
3. Release the key and press the key a second time within 2 s. Hold down the key for 3 to 4 seconds until the "S" symbol* stops flashing. The available pressure is now adopted as the new upper range value.

Position calibration - only display (bias pressure)
*Digital display optional

If the display does not show zero after calibrating the lower range value at zero operating pressure (position-dependent), it can be corrected to zero by adopting the available bias pressure (position calibration).

The bias pressure is calibrated using the Zero and Span keys.

1. Press the Zero and Span keys simultaneously. The bias pressure currently saved appears in the digital display*.
2. Release the keys and press them a second time within 2 seconds. Hold down the keys until the "Z" and the "S" symbols* stop flashing. The available pressure is now adopted as the new bias pressure.

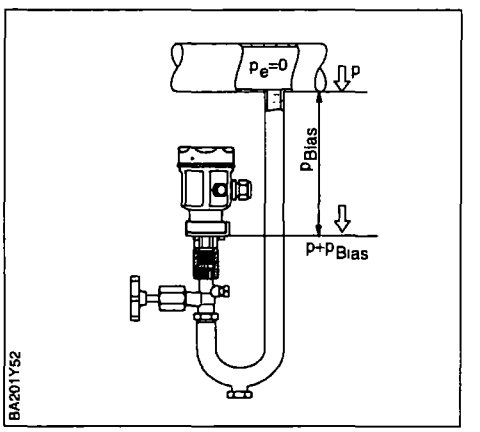

Hinweis!

Note!
Do not hold Zero and Span down for longer than 6 seconds, otherwise the system resets – see next section.

Resetting to factory settings (reset)

Use the Zero and Span keys to reset to the factory setting:
– to the lower range value (Zero) = lower sensor measuring limit
– to the upper range value (Span) = upper sensor measuring limit
– the bias pressure to zero = 0.0 pressure unit

1. Press the Zero and Span keys simultaneously.
2. Release the keys, press them a second time within 2 seconds and hold them for at least 7 seconds. A completed reset is confirmed on the digital display (optional) with "Res".

4.2 Commissioning and operation using communication

Preparatory work

- Connect the Cerabar M electrically (Chap. 2.5 "Electrical connection").
- Decide which tool you want to use to operate the Cerabar M and make the connection. (Commuwin II see Chapter 3 4, Universal HART Communicator DXR 275 see Chapter 3.5).

Resetting to factory setting (Reset)

By entering a certain code, the entries in the matrix are reset partially or completely to the factory settings. Further information on the various types of reset and their effects is given in Chapter 5.3 "Reset".

#	Matrix	Route through the menus	Input
Main group: Transmitter Information			
1	Resetting to factory setting (Reset)		
	V2H9	➤ Default Values	e.g 2380 Enter

Damping

The damping τ affects the speed with which the output signal and the digital display react to changes in pressure.
To set the damping using the handheld terminal, the damping switch on the electronic insert must be "on". With the handheld terminal, values between 0 and 40 seconds can be selected for the damping

#	Matrix	Route through the menus	Input
1	Move damping switch to "on"		
Main group: Basic calibration			
2	Suppression of measured value fluctuations		
	V0H7	➤ Damping output τ =0 40 s	e g 20 s Enter

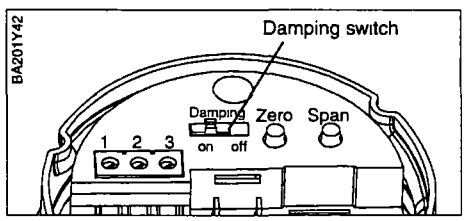

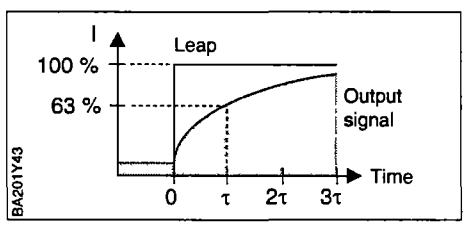

Selecting pressure unit

By selecting the pressure unit you define in which unit the pressure-specific parameters are displayed. The pressure units in the table below can be selected. After selecting a new pressure unit, all entries for pressure are recalculated to the new unit, e.g. 0...1 bar = 0...14.5 psi.

#	Matrix	Route through the menus	Input
Main group: Basic calibration			
1	Selecting pressure unit		
	V0H9	➤ Select pressure unit	e g psi Enter

Units	Units	Units	Units	Units
mbar	kPa	in H_2O	kg / cm^2	Torr
bar	MPa	ft H_2O	kgf / cm^2	mm Hg
Pa	mm H_2O	psi	atm	in Hg
hPa	m H_2O	g / cm^2	lb / ft^2	

Lower and upper range values: Setting without reference pressure

The desired pressure for the lower range value (zero point) and the upper range value is set using the handheld terminal without specifying a reference pressure.

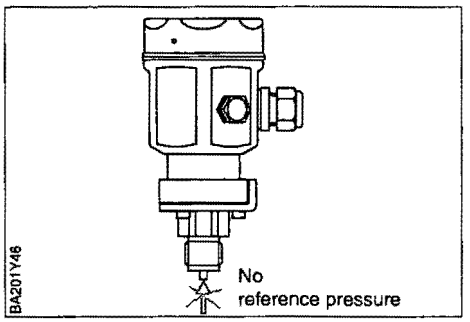

#	Matrix	Route through the menus	Input
Main group: Basic calibration			
1	Enter known pressure for the lower range value		
	V0H1	➤ Set 4 mA	e g 0 psi Enter
2	Enter known pressure for the upper range value		
	V0H2	➤ Set 20 mA	e.g 14.5 psi Enter

Lower and upper range values: Calibration with reference pressure

A reference pressure is available which corresponds exactly to the desired lower range value (zero point) and the desired upper range value.

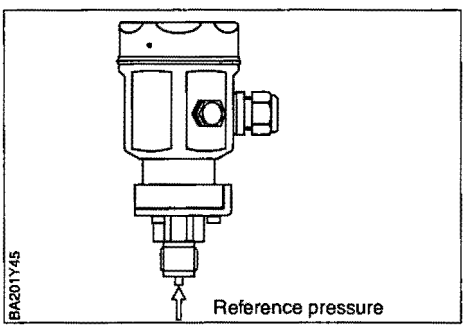

#	Matrix	Route through the menus	Input
Main group: Basic calibration			
1	Adopt available pressure as the lower range value		
	V0H3	➤ Confirm 4 mA automatically	e.g 0 psi Enter
2	Adopt available pressure as the upper range value		
	V0H4	➤ Confirm 20 mA automatically	e g. 14.5 psi Enter

Position calibration - only display (bias pressure)

If the display does not show zero after calibrating the zero point at zero operating pressure (position-dependent), the display value can be corrected to zero by entering or adopting a bias pressure (position calibration).

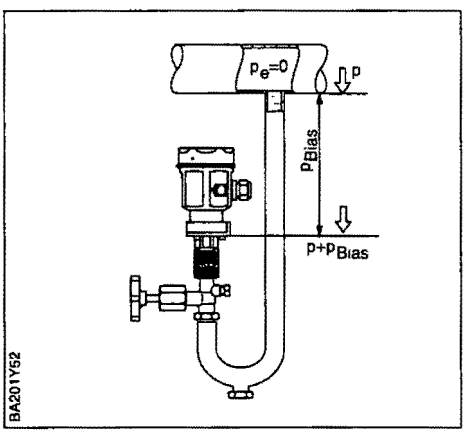

#	Matrix	Route through the menus	Input
Main group: Basic calibration			
1	Set display to zero by entering a known bias pressure (position-dependent pressure).		
	V0H5	➤ Set bias pressure	e g 5 psi Enter
alternative			
2	Set display to zero An available bias pressure (position-dependent pressure) is adopted as zero pressure.		
	V0H6	➤ Confirm bias pressure automatically	Enter

4 mA threshold (current output min. 4 mA)

The signal current in uninterrupted operation is set to 3.8...20.5 mA as standard. Selecting the 4 mA threshold guarantees that a minimum signal current of 4 mA is not undershot.

#	Matrix	Route through the menus	Input
Main group: Sensor data			
1	V7H3	➤ Off Current output min 4 mA	e.g. On Enter

Output with error

To signal an error, an error code with the measured value is transmitted. The bar graph in the digital display also takes in the value you have selected. The following values can be selected:

- MIN: 3.6 mA
- MAX: 22 mA
- CONTINUE: continue measurement

#	Matrix	Route through the menus	Input
Main group: Basic calibration			
1	Select output with error		
	V0H8	➤ Select safety	e.g. MAX. Enter

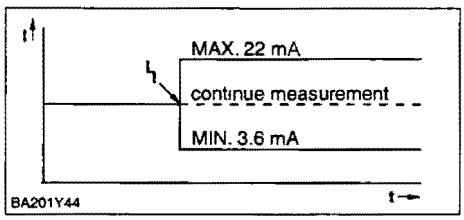

4.3 Locking/unlocking the operation

After calibration or after entering all parameters, operation can be locked using a three-digit code number other than 130. This locks all fields and functions except V9H9 "Security locking". Entering 130 deactivates the locking.

#	Matrix	Route through the menus	Input
Main group: Service			
1	Lock operation		
	V9H9	➤ Security locking	e g 131 Enter

2	Deactivate security locking		
	V9H9	➤ Security locking	130 Enter

4.4 Information on measuring point

The following information on the measuring point can be called up with the handheld terminal or using Commuwin II.

Matrix field	Display or entry
Measured values	
V0H0	Main measured value for pressure
V7H0	Current display. Present current in mA
V7H8	Sensor pressure (unit selectable in V0H9)
V9H7	Current damped pressure without bias correction
Sensor data	
V7H4	Lower calibration pressure
V7H5	Upper calibration pressure
V7H6	Lower range limit of sensor (unit selectable in V0H9)
V7H7	Upper range limit of sensor (unit selectable in V0H9)
Information on transmitter	
V2H2	8011/8012 = Software number
V2H7	Sensor data no Number of the entry in the sensor table (1 10), please refer to sensor pass
V2H8	Sensor data value Entry in the sensor table, contains all sensor-specific data, please refer to sensor pass
Error response	
V2H0	Diagnostic code
V2H1	Last diagnostic code

Communication layer

Matrix field	Display
VAH0	Measuring point designation Here you can name the measuring point using max. 8 characters
VAH1	System identification (Descriptor) Here you can enter max. 16 characters.
VAH2	User text Here you can enter max. 8 characters.
VAH3	Device serial number
VAH4,	Sensor serial number

5 Diagnosis and Trouble-Shooting

5.1 Diagnosis of errors and warnings

Errors

If the Cerabar M detects an error, the following occurs:
- an error code is generated and flashes on the digital display,
- when the digital display is connected, the bar graph accepts the selected value for the error message (MIN, MAX, CONTINUE),
- the display value and the bar graph flash,
- transmitter information can be read in the main group or error codes can be read in matrix fields V2H0 and V2H1.

Warnings

If the Cerabar M detects a warning, the following occurs:
- an error code is generated: the Cerabar M continues measuring.
- the scale flashes when the digital display is connected,
- transmitter information can be read in the main group or error codes can be read in matrix fields V2H0 and V2H1.

Error codes in V2H0 and V2H1

If several errors occur simultaneously, the sequence in which they are displayed corresponds to their order of priority.

Code	Type	Reason and remedial measures	Priority
E 101	Error	Sensor table check sum error – is shown when sensor data is being entered. *The error message disappears when the sensor data is entered correctly and in full.* – Check sum is incorrect *Check sensor data - see Sensor data "parameters no " (V2H7) and "Sensor Data Value" (V2H8). See also Chapter 6.6 Section "Entering sensor data"*	2
E 103	Error	Initialisation active – The electronics are initialised when the device is connected. *Wait for initialisation procedure*	1
E 104	Warning	Sensor calibration – Values in V7H4 and V7H5 (Low Sensor Cal and High Sensor Cal) are too close to each other e g after sensor recalibration – *Carry out reset (Code 2380), recalibrate sensor*	8
E 106	Error	Up/download active – *Wait for download*	5
E 115	Error	Sensor gauge pressure – Gauge pressure present. *Decrease pressure until message disappears* – Sensor - electronic insert cable connection interrupted. *Check cable connection.* – Sensor defective *Replace sensor*	3
E 116	Error	Download error (PC - Transmitter) – During download, the data is incorrectly transmitted to the processor, e.g due to open cable connections, voltage peaks (ripples) on the supply voltage, EMC effects. *Check the PC - transmitter cable connection Carry out reset "5140" Start download again.*	6
E 120	Error	Sensor underpressure – Pressure too low *Increase pressure until message disappears.* – Sensor - electronic insert cable connection interrupted. *Check cable connection* – Sensor defective. *Replace sensor.*	4
E 613	Warning	Current simulation active – Stays until simulation is completed – see also Chapter 5.2	7
E 620	Warning	Measured value outside of lower/upper range value	9

5.2 Current simulation

If the function or certain reactions of connected switching units need to be checked, a signal current independent of the available operating pressure can be simulated.

#	Matrix	Route through the menus	Input
Main group: Additional functions			
1	V7H1	➤ Simulation	ON
2	V7H2	➤ Simulate current	e g 22 mA

5.3 Reset

Reset via local operation

Use the Zero and Span keys to reset to the factory setting:
- to the lower range value (Zero) = lower sensor measuring limit
- to the upper range value (Span) = upper sensor measuring limit
- the bias pressure to zero = 0.0 pressure unit

1. Press the Zero and Span keys simultaneously.
2. Release the keys, press them a second time within 2 seconds and hold them for at least 7 seconds. A completed reset is confirmed on the digital display (optional) with "Res".

Reset via communication

By entering a certain code, the entries in the matrix fields are reset partially or completely to the factory settings.

#	Matrix	Route through the menus	Input
Main group: Transmitter information			
1	V2H9	➤ Factory settings	e.g 2380

The Cerabar M differentiates between different reset code numbers with different effects. See the table on the next page to find out which parameters are reset by reset code numbers 5140, 2380, 2509 or 731.

Table of parameters that can be reset by the reset code numbers.

Reset via communication (continued)

	H0	H1	H2	H3	H4	H5	H6	H7	H8	H9
V0	**Measured value**	**Set 4 mA**	**Set 20 mA**	**4 mA automat.**	**20 mA automat.**	**Set Bias pressure**	**Bias pressure automat.**	**Set output damping**	**Select safety**	**Pressure unit**
5140		= V7H6	= V7H7	deleted	deleted	0.0	deleted	0 0	max.	bar
2380		= V7H6	= V7H7	deleted	deleted	0.0	deleted	0 0	max.	
2509										
731		= V7H6	= V7H7	deleted	deleted	0.0	deleted	0 0	max	
V2	**Diagnostic code**	**Last Diag. code** 0	**Software-No.**							
5140										
2380										
2509										
731										
V3...V6										
V7	**Current display**	**Simulation**	**Simulation current**	**Current min. 4 mA**	**Low Sen. Calibration**	**High Sen. Calibration**	**Lower measuring limit**	**Upper measuring limit**	**Sensor pressure**	
5140		Off	deleted	Off	= V7H6	= V7H7				
2380				Off	= V7H6	= V7H7				
2509										
731				Off						
V8										
V9							**Pressure before Bias corr.**			**Security locking**
5140										130
2380										
2509										
731										
VA	**Measuring point**	**System identificat**	**User text**	**Serial number**	**Serial no. Sensor**					
5140	deleted	deleted	deleted							
2380	deleted	deleted								
2509										
731										

6 Maintenance and Repair

6.1 Maintenance

In general, no special maintenance is required on the Cerabar M.

Cleaning

In general, the pressure sensor must neither be cleaned nor cleared of material build-up. Build-up has no effect on the measurement result as long as it is porous and does not present a mechanical load on the diaphragm of the pressure sensor.
The cleaning agent used should not corrode the surfaces and seals. Avoid mechanical damage to the diaphragm.

Hinweis!

Note!
Measuring errors may occur over a short period within the framework of cleaning processes with strong temperature deviations.

6.2 Repair

The Endress+Hauser repairs concept provides for measuring devices to have a modular design and the customer may carry out repairs.
Chapter 6.5 contains all the spare parts listed with their order numbers. You can order them from Endress+Hauser for repairs on your Cerabar M. As far as necessary, the spare parts also include replacement instructions.

Hinweis!

Note!
For Ex-certified devices, please refer to Chapter 6.4 "Repair of Ex-certified devices".
For more information on service and spare parts contact the Endress+Hauser Service.

6.3 Returning for repair

If you have to return the Cerabar M to Endress+Hauser for repair, please fill in the "Declaration of Contamination" on Page 47 so that we have the following information:
- A description of the application.
- The chemical and physical properties of the product with which the device came into contact.
- A brief description of the error.

Before sending in the Cerabar M to Endress+Hauser for repair, please take the following protective measures:

- Remove all traces of the product.
  This is particularly important if the product is dangerous to health.
- We request that no device be returned to Endress+Hauser without all dangerous material having first been completely removed.

Hinweis!

Note!
Devices with certificates of conformity or design approval must be sent in for repair as complete units only.

6.4 Repair of Ex-certified devices

Warning!
When repairing Ex-certified devices, please note the following:

- Only specialist personnel or Endress+Hauser may undertake repairs to certified devices.
- Relevant standards, national hazardous area regulations and Safety Instructions (XA...) and Certificates must be observed.
- Only genuine Endress+Hauser spare parts may be used.
- When ordering spare parts, please check the device designation on the nameplate. Identical parts may only be used as replacements.
- Electronic inserts or sensors already in use in a standard device may not be used as spare parts for a certified device.
- Carry out repairs according to the instructions. After repairs, the device must fulfil the requirements of the specified individual tests.
- A certified device may only be converted into another certified variant by Endress+Hauser.
- All repairs and modifications must be documented.

For more information on service and spare parts contact the Endress+Hauser Service.

6.5 Spare parts

The diagrams on the following pages show all the Cerabar M spare parts which can be ordered from Endress+Hauser.
When ordering spare parts, please note the following:

- When replacing parts that are defined by the order code (e.g. PM❑ 4❑ - ❑ ❑❑ ❑❑ ❑ J ❑ ❑❑ ❑ = Cerabar M with Smart electronics and digital display), you must check whether the device designation on the nameplate is still valid.
- Only the process connection of the PMC 41, PMP 41 and PMC 45 models can be exchanged by the customer. For all other versions, the process connection ordered is supplied with the complete housing, but without the electronic insert.
- If a new sensor is ordered as a spare part, the completely mounted device is generally supplied with housing and process connection, but without the electronic insert.
- If the device designation on the nameplate is changed because of a spare part, a modified nameplate must also be ordered Information on the new device must be entered on the modified nameplate and the nameplate must then be secured to the Cerabar M's housing.
- An Ex-certified device may not be modified or converted. The device designation specified on the nameplate must still be applicable after a repair.
- It is not possible to convert a standard device into an Ex system by replacing its parts. The appropriate regulations are to be observed when certified devices are being repaired.

Electronics spare parts for Cerabar M with stainless steel housing

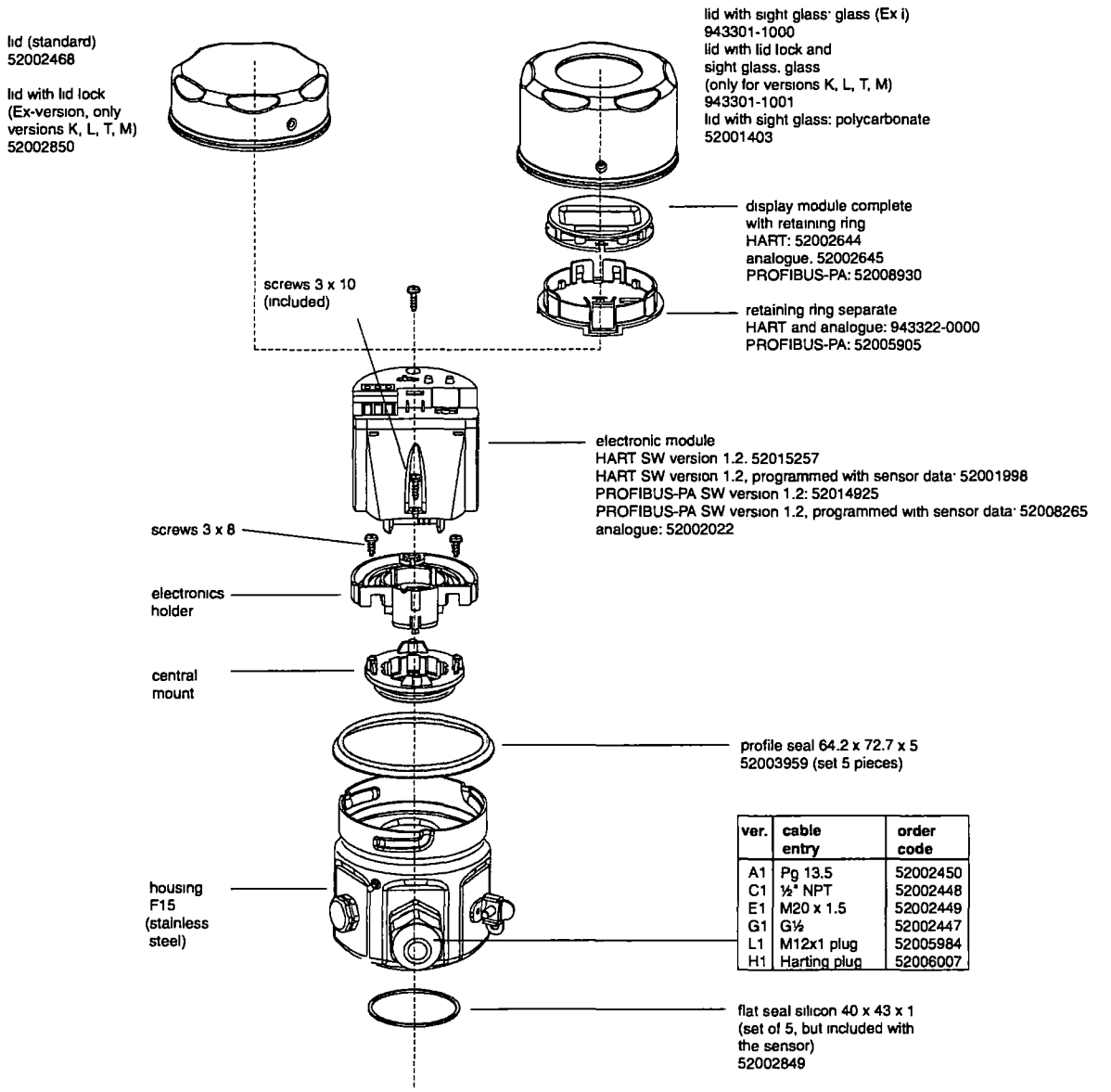

ver.	cable entry	order code
A1	Pg 13.5	52002450
C1	½" NPT	52002448
E1	M20 x 1.5	52002449
G1	G½	52002447
L1	M12x1 plug	52005984
H1	Harting plug	52006007

Electronics spare parts for Cerabar M with aluminium housing

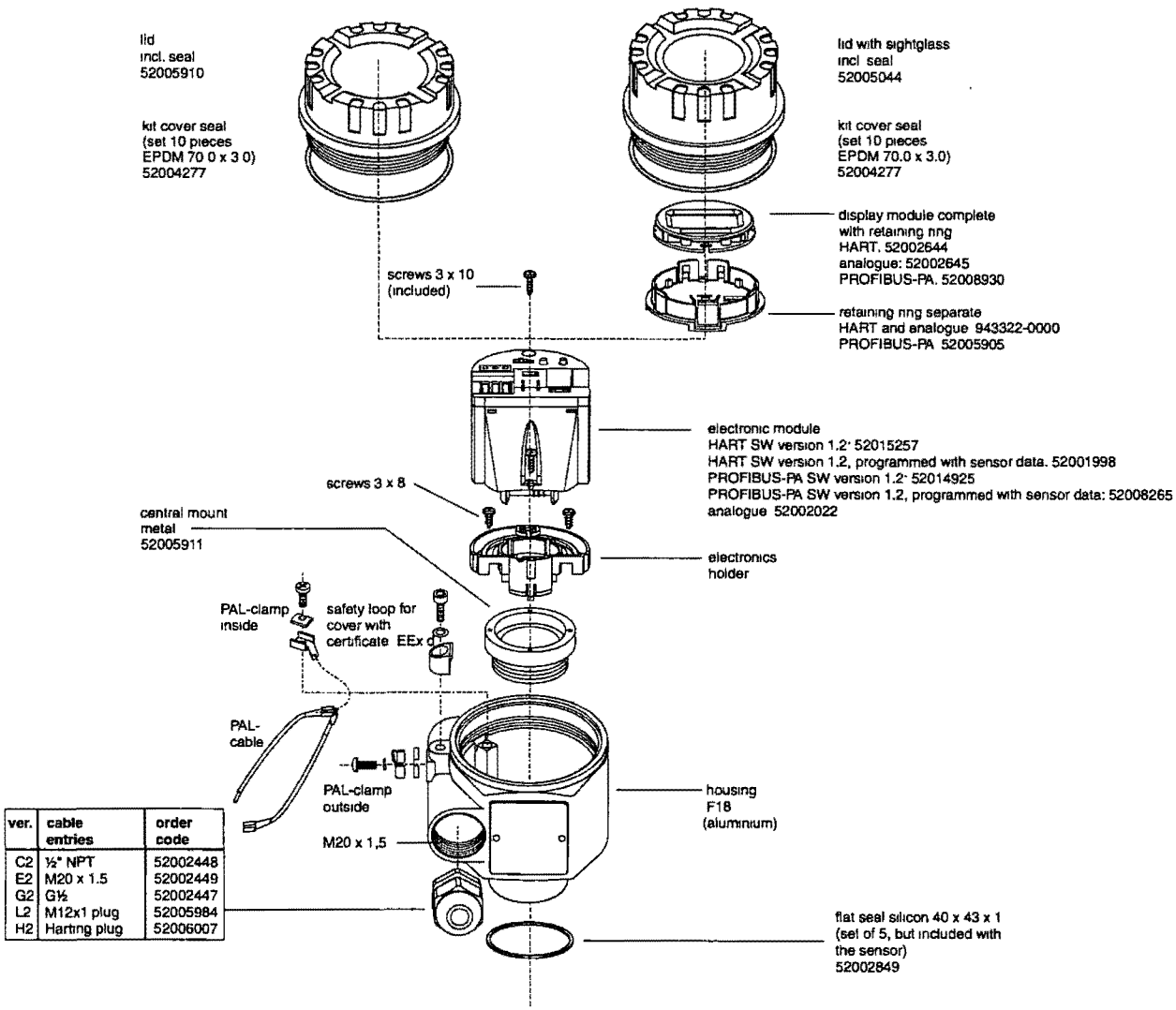

ver.	cable entries	order code
C2	½" NPT	52002448
E2	M20 x 1.5	52002449
G2	G½	52002447
L2	M12x1 plug	52005984
H2	Harting plug	52006007

Spare parts PMC 41

O-ring 26.7 x 1.78	order code
FKM	52009856 *
FKM, oxygen use	52010137 *
NBR	52009855 *
EPDM	52017989 *
FFKM, Kalrez	010561-0006
FFKM, Chemraz	52005749

* set of 5

exchangeable thread

ver.	thread	order code
1M	G½ external	52009786
1T	M20 x 1.5 external	52009787
1N	½" NPT external, ¼" internal	52009788
1A	½" NPT external, 11.4 mm internal	52009789
1K	PT½ external	52009790
1R	G½ external, 11.4 mm internal	52009791
1P	G½ external, G¼ internal	52009792
1S	PF½ external	52009793
2M	G½ external, Alloy	52000604
2N	½" NPT ext., ¼" internal, Alloy	52000603

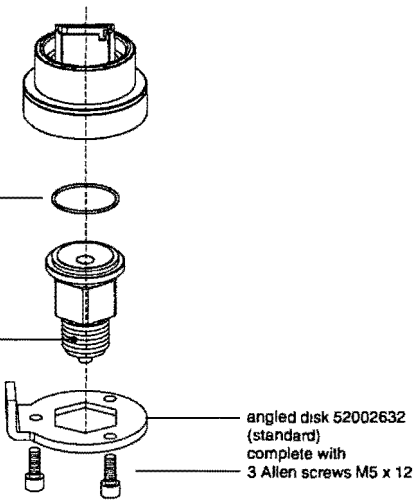

Spare parts PMC 45

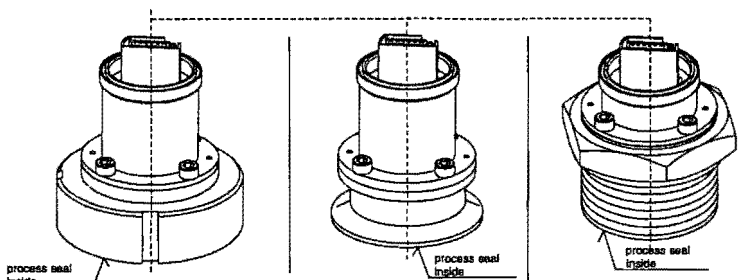

measuring cells with sanitary couplings 1.4435

DIN 11851, DN 50 (version AL)
DIN 11851, DN 40 (version AH)
DIN 11864-1-A DN 40 (version AS)
DIN 11864-1-A DN 50 (version AT)
SMS DN1½ (version EG)
SMS DN2 (version EL)

Clamp DN 2 (ver. DL)
Varivent 68 mm (ver. LL)
DRD D=65 mm (ver. KL)
APV Inline PN 40 (ver. HL)

threaded boss 1.4435

G 2 (ver. AR)
2" NPT (ver. BR)

process seals at the membrane O-rings 26.7 x 1.78		FKM	52009856 *
		FFKM Kalrez	010561-0006
		FKM, oxygen use	52010137 *
		Chemraz	52005749
	FDA listed	EPM, EPDM	52017989 *
		NBR	52010155 *

* set of 5

Spare parts PMP 41

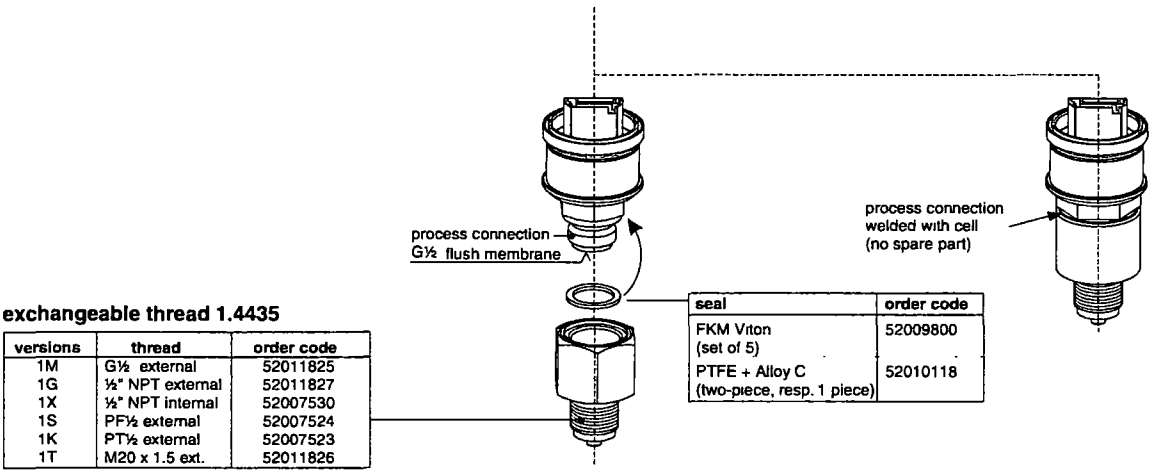

exchangeable thread 1.4435

versions	thread	order code
1M	G½ external	52011825
1G	½" NPT external	52011827
1X	½" NPT internal	52007530
1S	PF½ external	52007524
1K	PT½ external	52007523
1T	M20 x 1.5 ext.	52011826

seal	order code
FKM Viton (set of 5)	52009800
PTFE + Alloy C (two-piece, resp. 1 piece)	52010118

Spare parts PMP 45

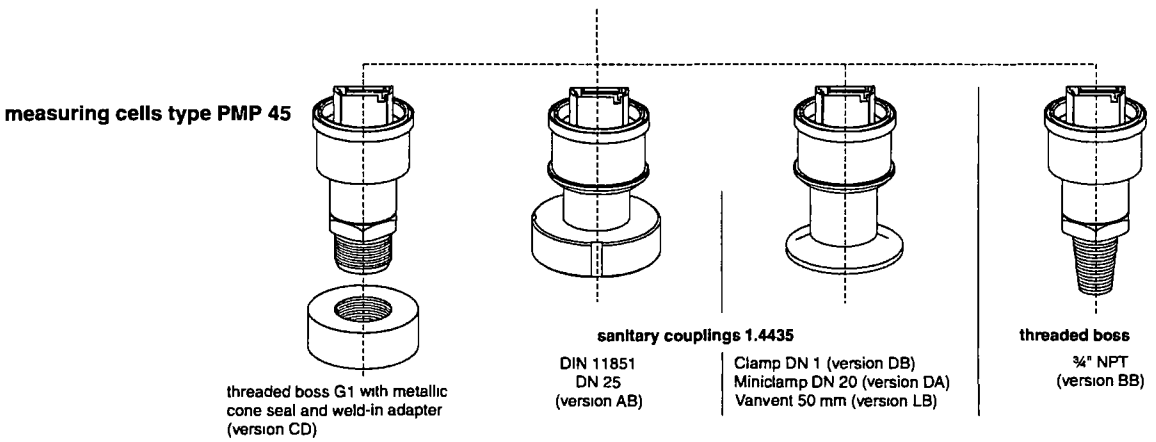

Spare parts PMP 46 and PMP 48

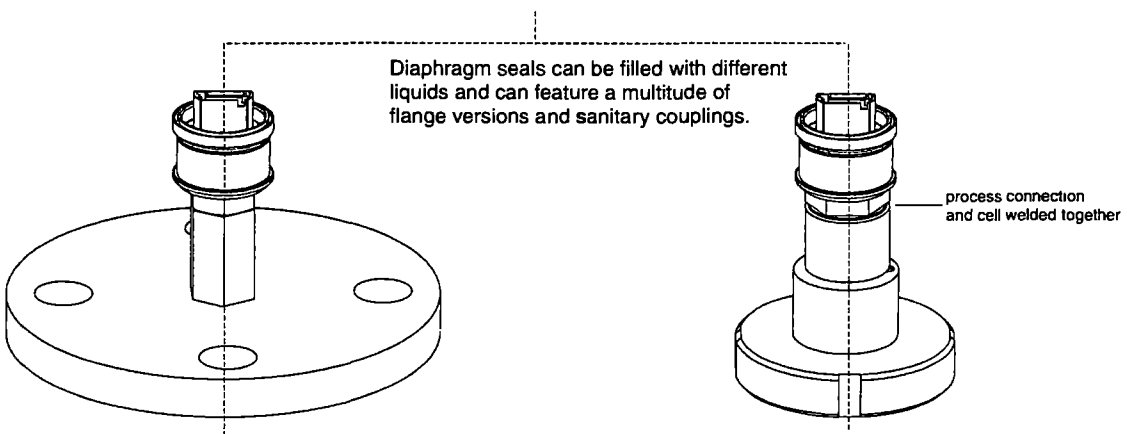

6.6 Mounting the digital display

The digital display is delivered already mounted when it is ordered with the device. It can be ordered as a spare part if required, Order No. 52002644.

Releasing the display

- Push up the latch with the arrow until the grip of the retaining ring on the electronic insert is audibly released.
- Release the retaining ring and lift off carefully to prevent the display cables from breaking.
- Remove the plug of the display from the electronic insert.

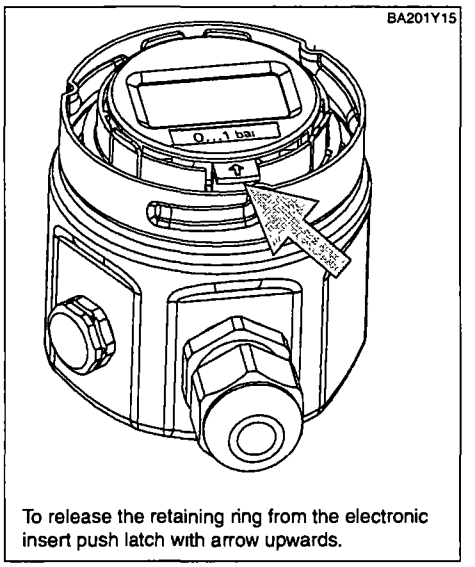

To release the retaining ring from the electronic insert push latch with arrow upwards.

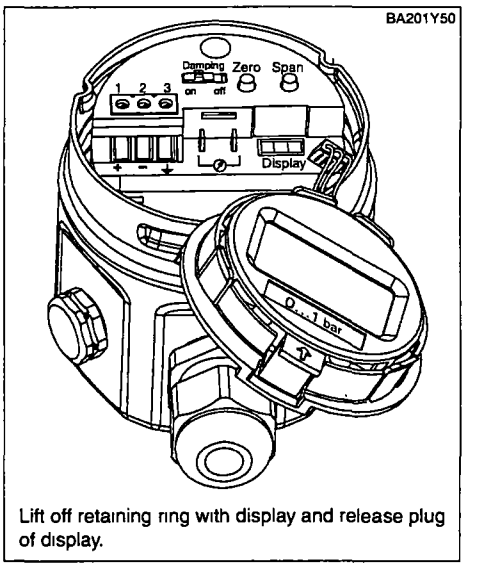

Lift off retaining ring with display and release plug of display.

Figure 6.1
Left:
Releasing the retaining ring
Right:
Lifting off display

Mounting the display

- Insert the plug of the display into the jack provided in the electronic insert and clip in ①.
- Insert the pin on the retaining ring into the hole provided in the electronic insert ②.
- Firmly press down the retaining ring with the display on the electronic insert. The grip clips in with an audible click.

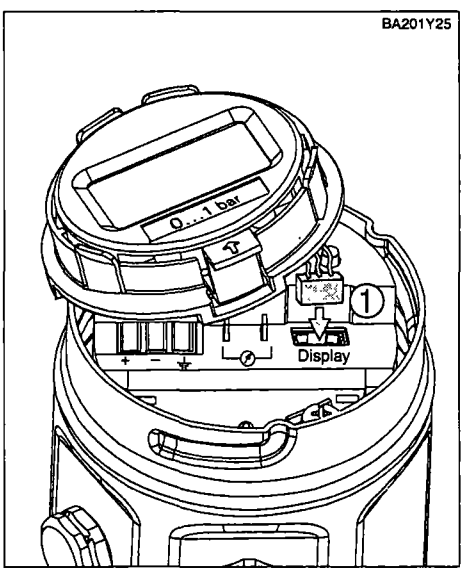

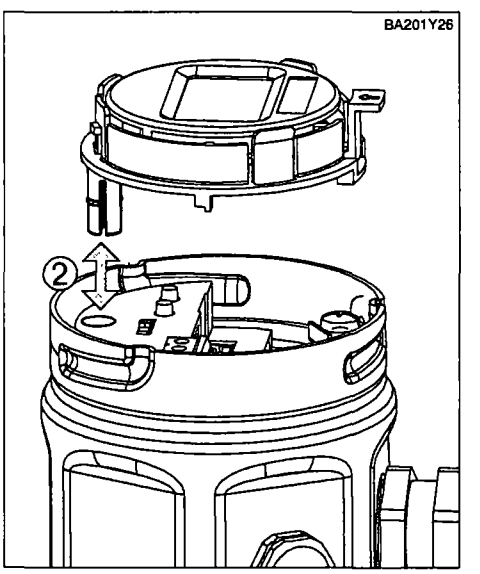

Figure 6.2
Mounting the display

6.7 Changing the electronic insert

If the present Smart electronic insert is to be replaced with another Smart electronic insert, it can be ordered under the following order number.

- ❑ 52001998
  Cerabar M meter electronics, 4...20 mA, HART protocol, with sensor data.
  When ordering, specify the device's sensor number (see nameplate). Your electronic insert is then realigned at the factory to the data of the present sensor.
- ❑ 52001997
  Cerabar M electronics, 4.. 20 mA, HART protocol, without sensor data.
  When ordering, the electronic insert is programmed with a default data set. In order to achieve the defined measuring accuracy again, reenter the data of the present sensor after replacing the electronic insert (see the following section "Entering sensor data").

After replacing the electronic insert the device must be recalibrated. Information on calibration is provided in Section 4 "Commissioning".
If the available Smart electronic insert is replaced with an analog electronic insert, the specifications in Operating Instructions BA 200P apply, for the PROFIBUS-PA electronic insert Operating Instructions BA 222P apply.

Removing the electronic insert

- Where appropriate, loosen and remove the retaining ring with the display and release the display's plug from the electronic insert.
- Release the connecting cable from the electronic insert.
- Loosen screws ① and ② on the electronic insert.
- Lift out the electronic insert.

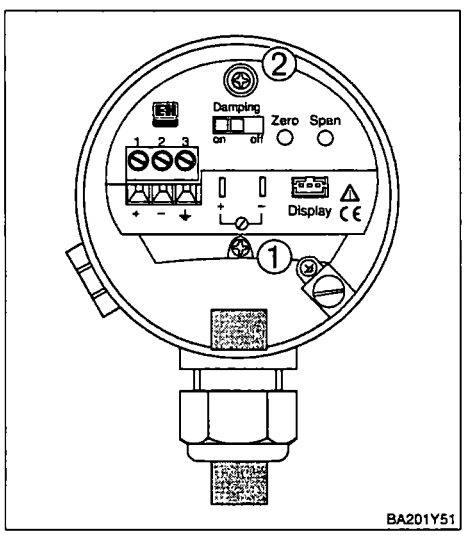

Figure 6.3
Position of the screws ① and ② for releasing the electronic insert

Mounting the electronic insert

- Plug in the new electronic insert and tighten screws ① and ②.
- Connect the connecting cable as shown in Chapter 2.5 "Electrical connection".
- Carry out a calibration as explained in Chapter 4 "Commissioning".
- If necessary, mount the display.

Entering sensor data

A sensor pass with sensor data is located in the housing of each device. These data must be re-entered if the electronics are replaced.

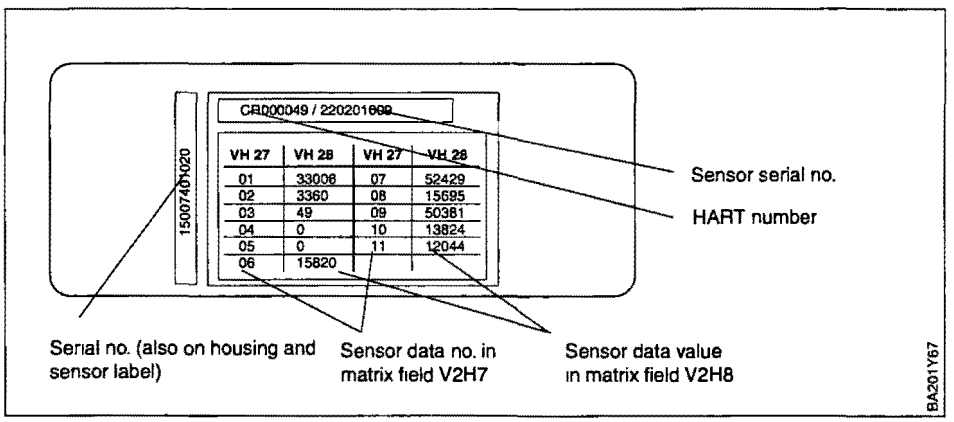

Figure 6.4
Example sensor pass

Before entering the sensor data, the matrix fields V2H7 and V2H8 are released by the code 333. All other matrix fields are then blocked against unauthorised operation. After entering, unlock the matrix fields again and perform a reset with code 2380.

Hinweis!

Note!
When entering the sensor data, the error code E101 "Sensor table check sum error" is shown. The error message disappears when the sensor data are entered completely and correctly.

Carry out the entry procedure as follows.

#	Matrix	Route through the menus	Input
Main group: Service			
1	Lock operation		
	V9H9	➤ Security locking	333
Main group: Transmitter information			
2	Entering sensor data		
	V2H7	➤ Enter sensor data no	01
	V2H8	➤ Enter sensor check sum	e g. 3306
	V2H7	➤ Enter sensor data no	02
	Enter all other pairs of values		
	V2H7	➤ Enter sensor data no	11
	V2H8	➤ Enter sensor coefficient A1	e g 12044
Main group: Service			
3	Unlock operation		
	V9H9	➤ Unlocking	130
Main group: Transmitter information			
4	Carry out reset		
	V2H9	➤ Adopt sensor data	Code 2380

6.8 Changing the sensor

If the sensor has to be changed, Endress+Hauser offers a complete housing with the new sensor and process connection required but without an electronic insert. Therefore, when changing the sensor, simply remove the electronic insert from the old housing and install it in the new one. After changing the measuring cell, the sensor parameters of the new sensor and the Cerabar M must be recalibrated.

- Ordering a housing with sensor and process connection:
  PM❑ 4❑ – ❑ ❑❑ ❑❑ ❑ W ❑ ❑❑ ❑ ❑
- For instructions on mounting the electronic insert and entering sensor parameters see section 6.7 "Changing the electronic insert."
- For instructions on calibration see Chapter 4 "Commissioning".

6.9 Changing the process seal

The process seal of the Cerabar M PMC 41, PMP 41 and PMC 45 can be replaced. All process seals can be interchanged as required. Observe the different temperature limits of the individual materials. For further information see Chapter 7 "Technical Data"

PMC 41

Changing the process seal for PMC 41:

- Loosen the screws on the retaining ring of the exchangeable thread.
- Remove the retaining ring and exchangeable thread.
- Clean the sealing surfaces and diaphragm carefully.
- Replace process seal.
- Secure the exchangeable thread with the retaining ring and screws.

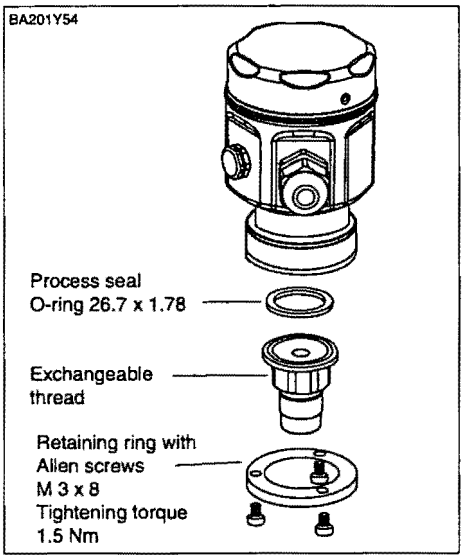

PMP 41

Changing the process seal on the PMP 41 (only versions with exchangeable thread):

- Loosen the exchangeable thread.
- Clean the sealing surfaces and diaphragm carefully.
- Replace process seal.
- Tighten the exchangeable thread.

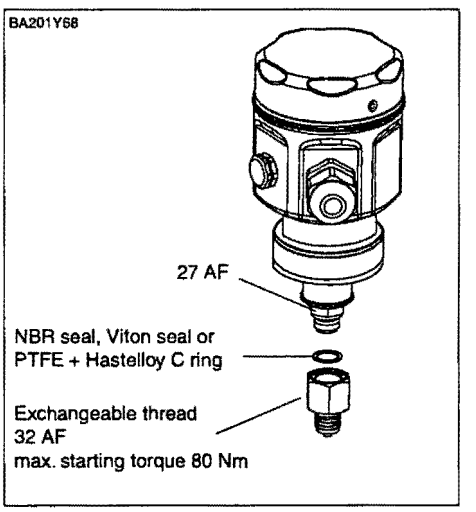

PMC 45

Changing the process seal on the PMC 45:
(Process seal for a G 1½, 1½ threaded connection NPT or M 44x1.25 cannot be changed).

- Loosen the screws of the process connection.
- Clean the sealing surfaces and diaphragm carefully.
- Replace process seal.
- Secure the process connection with the screws.

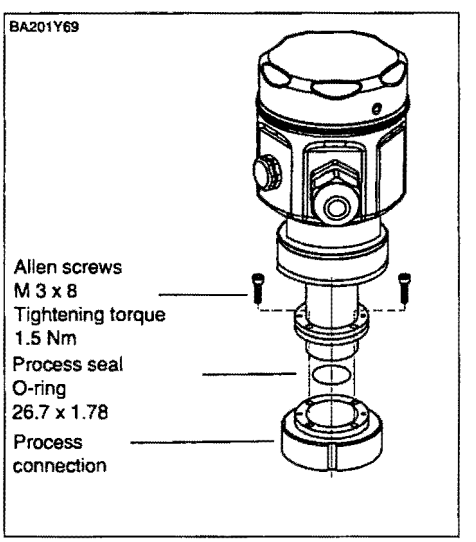

6.10 Sensor calibration

You can use the "Low Sensor Cal" (V7H4) and "High Sensor Cal" (V7H5) parameters to recalibrate a sensor if you want to calibrate your sensor exactly to a measuring range or want to mount a diaphragm seal, for example.
The highest accuracy of the pressure transmitter is obtained when the value for the "Low Sensor Cal" (V7H4) parameter corresponds to the lower range value (V0H1/V0H3) and the value for the "High Sensor Cal" (V7H5) parameter corresponds to the upper range value (V0H2/V0H4).

There must be a known reference pressure for the new lower or upper value of the sensor characteristic curve. The more accurate the reference pressure during sensor calibration, the higher the accuracy of the pressure transmitter later. A new value is then assigned to the applied pressure using the "Low Sensor Cal" (V7H4) and "High Sensor Cal" (V7H5) parameters.

#	VH	Entry	Remarks
1	A device with a sensor· 0 0 . 10.0 bar should be recalibrated for the range 1.0 ..6.0 bar.		
2	Reference pressure acting for value "Low Sensor Cal" (V7H4) = 1 0 bar.		
3	V7H4	1 0	The value 1 0 is assigned to the acting pressure.
4	Reference pressure acting for value "High Sensor Cal" (V7H5) = 6 0 bar.		
5	V7H5	6 0	The value 6 0 is assigned to the acting pressure.
6	The sensor is now calibrated for 1.0.. 6.0 bar. The matrix fields V7H4 and V7H5 display: Low Sensor Cal (V7H4) = 1 0 bar High Sensor Cal (V7H5) = 6.0 bar		

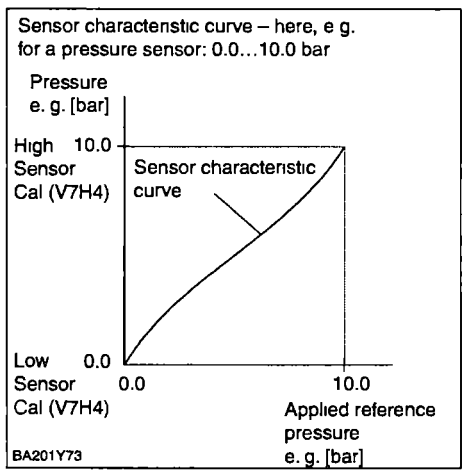

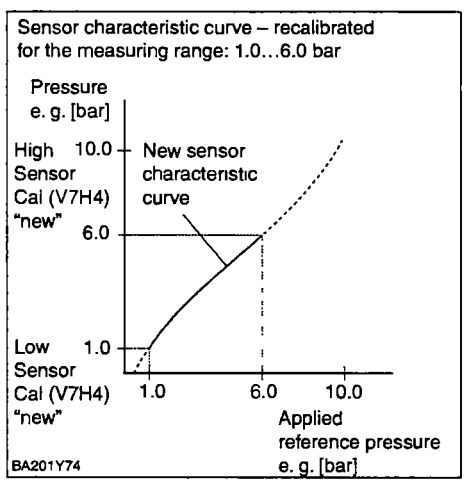

Note!
- By entering the reset code "2509" in matrix field V2H9, you reset the following parameters to the factory setting:
  – Low Sensor Cal = Lower measuring limit (V7H4 = V7H6),
  – High Sensor Cal = Upper measuring limit (V7H5 = V7H7),
- If the "Low Sensor Cal" (V7H4) and "High Sensor Cal" (V7H5) values are too close together, the device outputs the error message "E 104".

Hinweis!

7 Technical Data

General information

Manufacturer	Endress+Hauser
Device	Pressure transmitter
Designation	PMC 41, PMP 41, PMC 45, PMP 45, PMP 46, PMP 48
Technical documentation Technical data	BA 201P/00/en, version 12 03 DIN 19 259

Application

Measurement of absolute and gauge pressure in gases, vapours, liquids and dusts

Operation and system design

PMC 41, PMC 45 with ceramic sensor	The pressure causes a slight deflection of the ceramic diaphragm of the sensor. The change in the capacitance is proportional to the pressure and is measured by the electrodes of the ceramic sensor Volume of chamber. approx 2 mm^3 (0.078 in^3)
PMP 41, PMP 45, PMP 46, PMP 48 with metal sensor	The process pressure acting on the metallic separating diaphragm of the sensor is transmitted via a filling fluid to a resistance bridge. The change in the output voltage of the bridge is proportional to the pressure and is then measured. Volume of chamber· smaller than 1 mm^3 (0.039 in^3)
Measuring system	Cerabar M and power supply e g. via RN 221 transmitter power pack and operation via – two keys on the device and a plug-in display – DXR 275 handheld terminal – PC with the Commuwin II operating program via Commubox FXA 191
Construction	Stainless steel or aluminium housing, process connections according to European, American and Japanese standards and all common diaphragm seal versions
Signal transmission	4 . 20 mA with HART communications signal, 2-wire

Input

Measured variables	Absolute or gauge pressure

Measuring ranges

PMP 46, PMP 48·
The specified overload applies to the sensor Please also note the the maximum permissible gauge pressure when using diaphragm seals

PMC 41, PMC 45				**PMP 41, PMP 45, PMP 46, PMP 48**			
Type of pressure	**Measure-ment limits**	**Min. span (TD 10:1)**	**Overload**	**Type of pressure**	**Measure-ment limits**	**Min. span (TD 10:1)**	**Overload**
	bar	**bar**	**bar**		**bar**	**bar**	**bar**
gauge	0. +0 1	0.01	4	**gauge**	0 . +1	0 1	4
gauge	0.. +0 4	0.04	7	**gauge**	0. +4	0.4	16
gauge	0 . +1	0,1	10	**gauge**	0.. +10	1	40
gauge	0...+4	0 4	25	**gauge**	0 +40 *	4	160
gauge	0. .+10	1	40	**gauge**	0 ..+100 *	10	400
gauge	0. .+40	4	60	**gauge**	0...+400 *	40	600
gauge	–0.1 . +0 1	0 02	4	**gauge**	–1 +1	0.2	4
gauge	–0.4 . +0 4	0 08	7	**gauge**	–1 . +4	0.5	16
gauge	–1 +1	0 2	10	**gauge**	–1 +10	1.0	40
gauge	–1.. +4	0.5	25	* absolute pressure			
gauge	–1 ..+10	0 5	40				
absolute	0...+0.4	0 04	6	**absolute**	0. .+1	0 1	4
absolute	0...+1	0 1	9	**absolute**	0 . +4	0 4	16
absolute	0...+4	0 4	25	**absolute**	0 . +10	1	40
absolute	0...+10	1	40	**absolute**	0 . +40	4	160
absolute	0 . +40	4	60	**absolute**	0.. +100	10	400
				absolute	0...+400	40	600

Input
(continous)

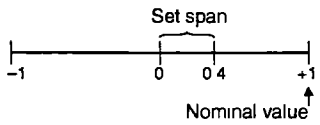

Figure 7.1
Turndown

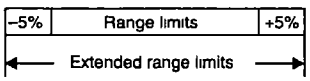

Figure 7.2
Extended range limits

Resistance to low pressures (vacuum resistance)	PMC 41, PMC 45 PMP 41, PMP 45 PMP 46, PMP 48	– Sensors with nominal value 0 1 bar: to 0.7 bar_{abs} all other sensors. to 0 bar_{abs} – To 10 $mbar_{abs}$ – Depends on the filling liquid of diaphram seal, see Technical Information TI 322P
Adjusting the span (Turn down)		TD 10 1 Turn down (TD) = nominal value / set span – Example (see adjacent figure 7.1) Nominal value = 1 bar Set span = 0.4 bar TD = 1·0 4
Zero point increase and decrease		Within the extended range limits, see table on page 40 for range limits. – Examples (see adjacent figure 7.2). Gauge pressure sensor· 0 ..4 bar Extended range limits: –0.2. +4.2 bar Absolute pressure sensor. 0...10 bar Extended range limits: 0...10 5 bar_{abs}

Output

Output signal		4.. 20 mA signal with HART protocol
Signal on alarm		Optional 3 6 mA, 22 mA or CONTINUE
Damping	Local Remote:	Depending on switch position· off 0 s, on: 2 s in switch position "on" freely adjustable between 0 and 40 s

Accuracy

Reference operating conditions	To DIN IEC 770 T_U=25°C (+77°F) Accuracy data apply after entering "Low sensor calibration" and "High sensor calibration" for lower range value and upper range value
Linearity including hysteresis and reproducibility (based on the limit point method to DIN IEC 770)	±0.2% of set span
Special specifications are required for linearity at low absolute pressure measuring ranges (due to smallest possible measuring uncertainty which may be transferred by the DKD calibration point)	PMC 41, PMC 45. ≥40 $mbar_{abs}$ to <100 $mbar_{abs}$ ±0.3% of set span
Use of absolute pressure sensors with measuring ranges smaller than 10 bar for gauge pressure measurement	Accuracy can be influenced by fluctuating ambient air pressure
Warm-up time	1 s
Rise time	220 ms
Settling time	600 ms
Long-term drift (with reference to set span)	±0 1% per year ±0.25 % per 3 years
Thermal effects: – With reference to the set span – Applies to transmitter without diaphragm seal and capillary tubes	for –10.. +60°C (+14.. +140°F). ±(0.2% x TD+0.2%) for –40 –10°C (–40 +14°F); +60 +85°C (+140 . +185°F). ±(0.4% x TD+0.4%) for process temperature +85...+125 °C (+185 257 °F) (PMC 45/PMP 45): ±(0.6% x TD+0.6%)
Temperature coefficient (maximum TK) – If the value of the temperature coefficient exceeds to the value of the thermal effects then the thermal effects automatically apply. – Applies to transmitter without diaphragm sea and capillary tubes.	Zero signal and span For –10°C...+60°C (+14°F +140°F)· ±0.08% of nominal value/10 K For –40°C...–10°C (–40°F. +14°F); +60°C +85°C (+140°F. .+185°F). ±0 1% of nominal value/10 K For process temperature +85 .+125 °C (+185. .257 °F) (PMC 45/PMP 45). ±0,12% of nominal value/10K
Vibration effects	None (4 mm in path peak-to-peak 5 Hz.. 15 Hz, 2 g: 15 Hz . 150 Hz, 1 g: 150 Hz . 2000 Hz)

Process conditions

Mounting conditions	Any position, zero point shift due to position can be corrected.

Ambient conditions

Ambient temperature range	–40 ..+85°C (–40. +185°F) For Ex-devices see safety instructions XA (ATEX) or Control Drawing ZD (CSA or FM)
Ambient temperature limits (short-term)	–40...+100°C (–40 .+257°F)
Storage temperature	–40 +85°C (–40...+185°F)
Climatic class	4K4H to DIN EN 60721-3
Degree of protection	– IP 65 with Harting plug (Han7D) – IP 66 or Nema 4X with cable gland or cable entry or M12 plug (with gauge sensor) – IP 68 (1 m water over 24 h) or Nema 6P (1 8 m water over 30 min) with assembled cable with reference air feed or M12 plug (with absolute sensor)
Electromagnetic compatibility	Interference emission to EN 61326 electrical equipment B, interference immunity to EN 61326 Annex A (industrial) and NAMUR Recommendation EMC (NE 21). Interference influence to EMC· 0 5 % Twin-core, twisted and screened cable recommended

Process conditions

Medium temperature range	PMC/PMP 41: –40 . +85°C (–40...+185°F) PMC/PMP 45· –40 .+125°C (–40 ..+257°F) PMP 46/48 depends on maximum permissible temperature of diaphragm seal filling liquid and on diaphagm diameter, see TI 322P. For Ex-devices see safety instructions XA (ATEX) or Control Drawing ZD (CSA or FM). PMC 41, PMC 45, PMP 41. Please note the temperature limits of seals used.
Medium temperature limits	PMC 45, PMP 45 Cleaning temperature for Cerabar M flush-mounted +150°C (+302°F) for max. 1 hour. Diaphragm seal with temperature spacer and high-temperature oil: max. 350°C (+662°F). PMC 41, PMC 45, PMP 41 Please note the temperature limits of seals used – see page 43
Pressure specifications	See nameplate. Observe pressure-temperature derating.

Mechanical construction

Design

Housing	Stainless steel (Type F15) or aluminium (Type F18) Optional electrical connection – Cable gland M 20 x 1.5 – Cable entry Pg 13.5, G ½, ½ NPT, – Harting plug (Han7D) or plug M 12 x 1 – Permanently attached cable with reference air feed
Process connections	All common thread versions, flush-mounted connections, flanges and diaphragm seal variants

[1]	Seals	Temperature limits
1	FKM, Viton	–20°C (–4°F)
6	FKM, Viton grease-free	–10°C (+14°F)
A	FKM, Viton oil and grease-free for oxygen	–10°C (+14°F) to [2]
2	NBR (FDA)	–20 °C...+80 °C (–4°F. +176°F)
7	FFKM, Kalrez compound 4079	+5°C (+41°F))
C	FFKM Chemraz	–10 °C (+14°F)
4	EPDM (FDA)	–40°C (–40°F)

[1] from Cerabar M order code
[2] Note the application limits for oxygen (as per BAM list of non-metallic materials)

Materials

Housing		Stainless steel 1 4404 (AISI 316L), Ra < 0 8 µm or die-cast aluminium housing with protective polyester-based powder coat
O ring	stainless steel housing aluminium housing	– Silicon – NBR
Nameplate	stainless steel housing aluminium housing	– engraved on housing with laser – 1 4301 (AISI 304)
Process connections	PMP 41 PMC 41 PMP 45, PMC 45, PMP 46, PMP 48	– 1.4435 (AISI 316L), adapter 1 4435 (AISI 316L) – 1.4435 (AISI 316L), Alloy 2 4819 (C276) – 1.4435 (AISI 316L)
Process diaphragm	PMC 41, PMC 45 PMP 41, PMP 45, PMP 46 PMP 48	– Al_2O_3 aluminium oxide ceramic (FDA-conform) (PMC 41: 96 %; PMC 45: 99 9 %) – 1.4435 (AISI 316L) – Alloy 2.4819 (C276), Tantalum, PTFE film on 1.4435 (AISI 316L)
Coupling nut		1 4307
Seals		See adjacent table
Mounting accessories		Mounting bracket for pipe and wall mounting 1 4301 (AISI 304)
Filling fluid in diaphragm seals		Silicone oil, vegetable oil (FDA-conform), glycerine, high-temperature oil, Fluorolube

Measuring cell

PMC 41, PMC 45 PMP 41, PMP 46, PMP 48	– None, dry cell sensor – Optional silicone oil or inert oil (Voltalef) for oxygen or vegetable oil (FDA-conform)
PMP 45	– Vegetable oil (FDA-conform)

Display and operating interface

Display	Pluggable digital display with four-digits pressure display and bargraph with 28 segments.

Power supply

Supply voltage	11 5 . 45 V_{DC} Ex ia: 11 5...30 V_{DC}
Overvoltage category	II to DIN EN 61010-1
Ripple	No effect for 4 .20 mA signal up to ±5% residual ripple within permissible range. With HART communicator and Commubox max ripple (measured on 500 Ω) 47 125 Hz: U_{PP}=200 mV max noise (measured on 500 Ω) 500 Hz 10 kHz: U_{eff}=2.2 mV

Certificates and approvals

Ignition protection	See chapter "Notes on Safety".
CE Mark	The device meets the legal requirements of the EC directive Endress+Hauser confirms that the device has been tested successfully by attaching the CE mark.
Pressure equipment directive	– This device conforms to Article 3(3) of EC Directive 97/23/EC (pressure equipment directive) and is developed and produced in sound engineering practice. – PMP 46 with pipe diaphragm ≥ DN40/PN40· Suitable for stable gases in Group 1 (Pressure Equipment Directive Category II)

7.1 Maximum mounting space

The dimension indicates the max. mounting space of Cerabar M (with high housing cover for the digital display)

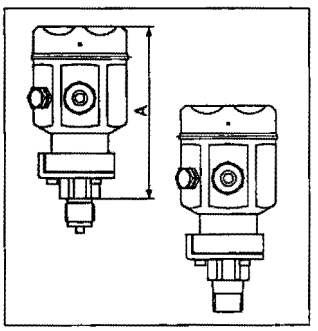

PMC 41
Dimension A
Stainless steel housing: 155 mm
Aluminium housing: 160 mm
(see also TI 321P)

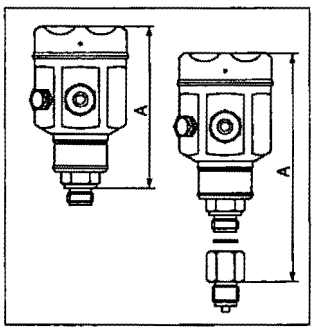

PMP 41
Dimension A, diaphragm flush-mounted
Stainless steel housing: 145 mm
Aluminium housing: 150 mm

Dimension A, diaphragm internal
Stainless steel housing: 185 mm
Aluminium housing: 174 mm
(see also TI 321P)

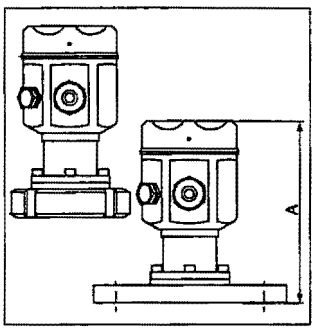

PMC 45
Dimension A
Stainless steel housing: 174 mm
Aluminium housing: 180 mm
(see also TI 321P)

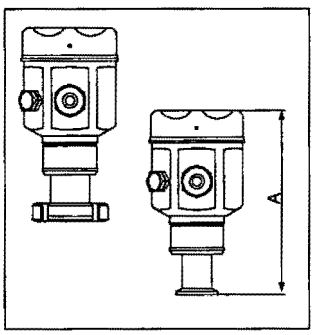

PMP 45
Dimension A
Stainless steel housing: 167 mm
aluminium housing: 172 mm
(see also TI 321P)

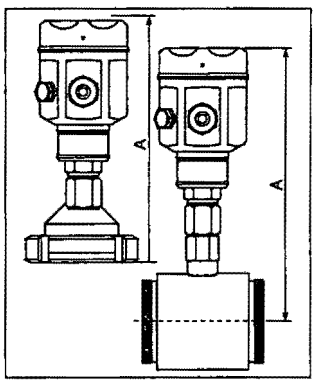

PMP 46
Dimension A: Diaphragm seal
Stainless steel housing: 268 mm
Aluminium housing: 265 mm

Dimension A: Pipe diaphragm seal
Stainless steel housing: 289 mm
Aluminium housing: 294 mm
(see also TI 322P)

PMP 48
Dimension A
Stainless steel housing: 287 mm
Aluminium housing: 300 mm
(see also TI 322P)

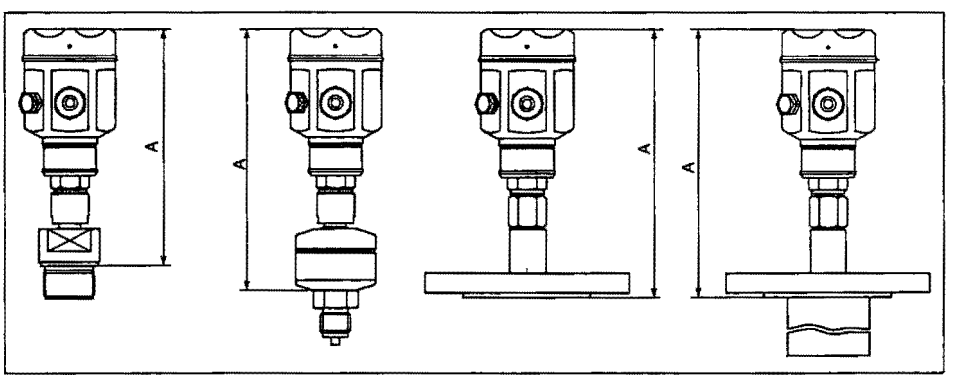

Conversion factors
1mm = 0.039 in
1 in = 25.4 mm

8 Operating Matrix

	H0	H1	H2	H3	H4	H5	H6	H7	H8	H9
V0 **Basic calibration**	Measured value	Set 4 mA	Set 20 mA	Confirm 4 mA autom.	Confirm 20 mA autom	Set Bias pressure	Confirm Bias pressure autom	Set output damping 0. 40 s	Select safety MIN MAX CONTINUE	Select pressure unit
V1										
V2 **Transmitter information**	Diagnostic code	Last diagnostic	8011/8012 Software no.					Sensor data no	Sensor data value	Reset
V3...V6										
V7 **Sensor data**	Current display	Off Simulation	Simulate current	Off Current output min 4 mA	Low Sensor Calibration	High Sensor Calibration	Lower measuring limit	Upper measuring limit	Sensor pressure	
V8										
V9 **Service**								Pressure before bias correction		Security locking: ≠ 130 Unlocking device: 130 Release V2H7, V2H8. 333
VA **Communication**	Measuring point	System identification	User text	Serial number	Serial number Sensor					

Display field

This matrix gives a summary of factory settings.
You can also enter your values here.

	H0	H1	H2	H3	H4	H5	H6	H7	H8	H9
V0	—	0 0	V7H7	—	—	0 0	—	0 0	MAX.	bar
V1										
V2		0	xxxx							0
V3...V6										
V7	—	OFF	—	OFF			—	—	—	0
V8										
V9								—		130
VA	———	———								

Index

!
4 mA threshold 23

A
Application 6

C
Calibrating lower range value 19
Calibrating upper range value 20
Calibration 22
Capillary tubing 9
Ceramic measuring cell 6
Certain code 21, 26
Cleaning 28
Commissioning 4, 19
Commuwin II 17
Connection 12
  Commubox FXA 191 connection 14
  DXR 275 Handheld terminal connection 14
Current simulation 26

D
Damping 19, 21
Diagnosis 25-27
Display 16
Display, mounting 34

E
Electrical symbols 5
Electronic insert, changing 35-37
Error codes 25
Errors 25
Explosion hazardous areas 4
Explosion protection 5

G
Graphic operation 17

I
Information on measuring point 24
Installation 4
Installation instructions 7

L
Locking 23

M
Maintenance 28-39
Measuring system 6
Metal measuring cell 6
Mounting accessories 11
Mounting bracket 11

N
Notes on safety 4

O
Operating elements 15-16
Operating matrix 17, 45
Operating principle 6
Operation 4, 15-18
Output with error 23

P
Position calibration, display (bias pressure) . . . 22
Pressure unit 21
Process seal, changing 37

R
Reference pressure 22
Repair 28-39
Reset 26
Resetting to factoring setting (Reset) 21

S
Sensor data, entering 36
Sensor, changing 37
Short operating instructions 2
Software history 2
Spare parts 29-33

T
Technical data 40-44
Temperature spacers 9

U
Universal HART Communicator DXR 271 18
Unlocking 23
Usage 4

W
Warnings 25

Declaration of contamination

Dear customer,
Because of legal determinations and for the safety of our employees and operating equipment we need this "Declaration of contamination" with your signature before your order can be handled. Please put the completely filled in declaration to the instrument and to the shipping documents in any case. Add also safety sheets and/or specific handling instructions if necessary.

type of instrument / sensor: _____ serial number: _____

medium / concentration: _____ temperature: _____ pressure: _____

cleaned with: _____ conductivity: _____ viscosity: _____

Warning hints for medium used:

☐ radioactive ☐ explosive ☐ caustic ☐ poisonous ☐ harmful to health ☐ biologically hazardous ☐ inflammable ☐ safe

Please mark the appropriate warning hints.

Reason for return:

_____

_____

Company data:

company: _____ contact person _____

_____ _____

_____ department: _____

address: _____ phone number: _____

_____ fax / e-mail: _____

_____ your order no.: _____

I hereby certify that the returned equipment has been cleaned and decontaminated acc. to good industrial practices and is in compliance with all regulations. This equipment poses no health or safety risks due to contamination.

_____ _____

(Date) (company stamp and legally binding signature)

More information about services and repairs:
www.services.endress com

Endress+Hauser
The Power of Know How

Europe

Austria
❑ Endress+Hauser Ges m.b.H
Wien
Tel (01) 88056-0, Fax (01) 88056-335

Belarus
Belorgsintez
Minsk
Tel. (017) 2 508473, Fax (017) 2 508583

Belgium / Luxembourg
❑ Endress+Hauser N V
Brussels
Tel. (02) 2480600, Fax (02) 2480553

Bulgaria
Intertech-Automation
Sofia
Tel (02) 9627152, Fax (02) 9621471

Croatia
❑ Endress+Hauser GmbH+Co
Zagreb
Tel. (01) 6637785, Fax (01) 6637823

Cyprus
I+G Electrical Services Co Ltd.
Nicosia
Tel (02) 484788, Fax (02) 484690

Czech Republic
❑ Endress+Hauser Czech s.r.o.
Praha
Tel. (02) 66784200, Fax (026) 66784179

Denmark
❑ Endress+Hauser A/S
Soborg
Tel (70) 131132, Fax (70) 132133

Estonia
Elvi-Aqua
Tartu
Tel (7) 441638, Fax (7) 441582

Finland
❑ Metso Endress+Hauser Oy
Helsinki
Tel. (204) 83160, Fax (204) 83161

France
❑ Endress+Hauser S.A.
Huningue
Tel. (389) 696768, Fax (389) 694802

Germany
❑ Endress+Hauser
Messtechnik GmbH+Co KG
Weil am Rhein
Tel (07621) 975-01, Fax (07621) 975-555

Great Britain
❑ Endress+Hauser Ltd
Manchester
Tel. (0161) 2865000, Fax (0161) 9981841

Greece
I & G Building Services Automation S.A.
Athens
Tel (01) 9241500, Fax (01) 9221714

Hungary
❑ Endress+Hauser Magyarország
Budapest
Tel. (01) 4120421, Fax (01) 4120424

Iceland
Sindra-Stál hf
Reykjavik
Tel. 5750000, Fax 5750010

Ireland
❑ Flomeaco Endress+Hauser Ltd.
Clane
Tel (045) 868615, Fax (045) 868182

Italy
❑ Endress+Hauser S.p.A
Cernusco s/N Milano
Tel. (02) 92192-1, Fax (02) 92192-362

Latvia
Elekoms Ltd.
Riga
Tel. (07) 336444, Fax (07) 312894

Lithuania
UAB "Agava"
Kaunas
Tel. (03) 7202410, Fax (03) 7207414

Netherlands
❑ Endress+Hauser B.V.
Naarden
Tel. (035) 6958611, Fax (035) 6958825

Norway
❑ Endress+Hauser A/S
Lierskogen
Tel. (032) 858850, Fax (032) 859851

Poland
❑ Endress+Hauser Polska Sp. z o.o.
Wroclaw
Tel. (071) 7803700, Fax (071) 7803700

Portugal
❑ Endress+Hauser Lda
Cacem
Tel. (219) 4267290 Fax (219) 4287299

Romania
Romconseng S.R L.
Bucharest
Tel. (01) 4101634, Fax (01) 4112501

Russia
❑ Endress+Hauser GmbH+Co
Moscow
Tel. (095) 1587564, Fax (095) 7846391

Slovak Republic
Transcom Technik s.r.o.
Bratislava
Tel (2) 44888690, Fax (2) 44887112

Slovenia
❑ Endress+Hauser D.O.O.
Ljubljana
Tel. (01) 5192217, Fax (01) 5192298

Spain
❑ Endress+Hauser S.A
Sant Just Desvern
Tel (93) 4803366, Fax (93) 4733839

Sweden
❑ Endress+Hauser AB
Sollentuna
Tel (08) 55511600, Fax (08) 55511655

Switzerland
❑ Endress+Hauser Metso AG
Reinach/BL 1
Tel. (061) 7157575, Fax (061) 7111650

Turkey
Intek Endüstriyel Ölcü ve
Levent/Istanbul
Tel (0212) 2751355, Fax (0212) 2682775

Ukraine
Photonika GmbH
Kiev
Tel. (44) 2688102, Fax (44) 2690805

Yugoslavia Rep.
Meris d.o.o.
Beograd
Tel (11) 4412966, Fax (11) 3085778

Africa

Algeria
Symes Systemes et mesures
Annaba
Tel. (38) 883003, Fax (38) 883002

Egypt
Anasia Egypt For Trading S.A.E
Heliopolis/Cairo
Tel (02) 2684159, Fax (02) 2684169

Morocco
Oussama S.A.
Casablanca
Tel. (02) 22241338, Fax (02) 2402657

South Africa
❑ Endress+Hauser Pty. Ltd.
Sandton
Tel. (011) 2628000, Fax (011) 2628062

Tunisia
Controle, Maintenance et Regulation
Tunis
Tel (01) 793077, Fax (01) 786595

America

Argentina
❑ Endress+Hauser Argentina S.A.
Buenos Aires
Tel. (11) 45227970, Fax (11) 45227909

Bolivia
Tritec S.R.L.
Cochabamba
Tel. (04) 4256993, Fax (04) 4250981

Brazil
❑ Samson Endress+Hauser Ltda
Sao Paulo
Tel (011) 50313455, Fax (011) 50313067

Canada
❑ Endress+Hauser Ltd.
Burlington, Ontario
Tel. (905) 6819292, Fax (905) 6819444

Chile
❑ Endress+Hauser Chile Ltd.
Santiago
Tel. (02) 321-3009, Fax (02) 321-3025

Colombia
Colsein Ltda
Bogota D.C.
Tel. (01) 2367659, Fax (01) 6104186

Costa Rica
EURO-TEC S.A.
San Jose
Tel 2202808, Fax 2961542

Ecuador
Insetec Cia. Ltda
Quito
Tel (02) 228948, Fax (02) 2461833

Guatemala
Automatizacion Y Control Industrial S.A.
Ciudad de Guatemala, C.A.
Tel. (03) 345985, Fax (03) 327431

Mexico
❑ Endress+Hauser S.A. de C.V.
Mexico, D.F
Tel. (5) 55568-2407, Fax (5) 55568-7459

Pareguay
Incoel S R L.
Asuncion
Tel (021) 213989, Fax (021) 226583

Peru
Process Control S.A
Lima
Tel. (2) 610515, Fax (2) 612978

USA
❑ Endress+Hauser Inc
Greenwood, Indiana
Tel. (317) 535-7138, Fax (317) 535-8498

Venezuela
Controval C.A.
Caracas
Tel. (02) 9440966, Fax (02) 9444554

Asia

Azerbaijan
Modcon Systems
Baku
Tel. (12) 929859, Fax (12) 929859

China
❑ Endress+Hauser Shanghai
Instrumentation Co Ltd.
Shanghai
Tel (021) 54902300, Fax (021) 54902303

❑ Endress+Hauser Beijin
Instrumentation Co. Ltd
Beijing
Tel. (010) 65882468, Fax: (010) 65881725

Hong Kong
❑ Endress+Hauser H.K Ltd.
Hong Kong
Tel. 85225283120, Fax 85228654171

India
❑ Endress+Hauser (India) Pvt. Ltd
Mumbai
Tel (022) 8521456, Fax (022) 8521927

Indonesia
PT Grama Bazita
Jakarta
Tel. (21) 7955083, Fax (21) 7975089

Japan
❑ Sakura Endress Co Ltd
Tokyo
Tel. (0422) 540611, Fax (0422) 550275

Malaysia
❑ Endress+Hauser (M) Sdn. Bhd.
Shah Alam, Selangor Darul Ehsan
Tel (03) 78464848, Fax (03) 78468800

Pakistan
Speedy Automation
Karachi
Tel. (021) 7722953, Fax (021) 7736884

Philippines
❑ Endress+Hauser Inc.
Pasig City, Metro Manila
Tel (2) 6381871, Fax (2) 6388042

Singapore
❑ Endress+Hauser (S.E A.) Pte., Ltd.
Singapore
Tel (65) 668222, Fax (65) 668848

South Korea
❑ Endrese+Hauser (Korea) Co., Ltd.
Seoul
Tel (02) 6587200, Fax (02) 6592838

Taiwan
Kingjarl Corporation
Taipei
Tel. (02) 27183938, Fax (02) 27134190

Thailand
❑ Endress+Hauser Ltd.
Bangkok
Tel. (2) 9967811-20, Fax (2) 9967810

Uzbekistan
Im Mexatronoka EST
Tashkent
Tel (71) 1167316, Fax (71) 1167318

Vietnam
Tan Viet Bao Co. Ltd.
Ho Chi Minh City
Tel (08) 8335225, Fax (08) 8335227

Iran
PATSA Industy
Tehran
Tel (021) 8726869, Fax(021) 8747761

Isreel
Instrumetrics Industrial Control Ltd
Netanya
Tel (09) 8357090, Fax (09) 8350619

Jordan
A P Parpas Engineering S.A.
Amman
Tel (06) 5539283, Fax (06) 5539205

Kingdom of Saudi Arabia
Anasia Ind Agencies
Jeddah
Tel (02) 6710014, Fax (02) 6725929

Lebanon
Network Engineering
Jbeil
Tel. (3) 944080, Fax (9) 548036

Sultanate of Oman
Mustafa Sultan Science & Industry Co. L.L.C.
Ruwi
Tel. 602009, Fax 607066

United Arab Emirates
Descon Trading EST.
Dubai
Tel. (04) 2653651, Fax (04) 2653264

Australia + New Zealand

Australia
❑ Endress+Hauser PTY. Ltd.
Sydney
Tel (02) 88777000, Fax (02) 88777099

New Zealand
EMC Industrial Group Limited
Auckland
Tel (09) 4155110, Fax (09) 4155115

All other countries

❑ Endress+Hauser GmbH+Co.KG
Instruments International
Weil am Rhein
Germany
Tel (07621) 975-02, Fax (07621) 975-345

http://www.endress.com

Endress+Hauser
The Power of Know How

❑ Members of the Endress+Hauser group 06.02/PT

BA 201P/00/en/12.03
52022183
CCS/CV5

52022183

SPEC SERVICES

SPECIFICATION FORMS FOR PROCESS MEASURMENT AND CONTROL INSTRUMENTS, PRIMARY ELEMENTS AND CONTROL VALVES

PROJECT: GROUNDWATER TREATMENT PLANT
CUSTOMER: W. A. RASIC CONSTRUCTION
CUSTOMER JOB NO.:
PLANT:
LOCATION:

PRESSURE GAUGES

NO.	BY	DATE	REVISION
A	EIS	7/21/08	FOR APPROVAL
B	ED	11/21/08	FOR APPROVAL

SHEET 1 OF 1
SPEC NO. | REV.
CONTRACT | DATE
REQ. P.O.
BY | CHK'D | APPR.

1. TYPE: DIRECT RDG. [x] 3 - 15 LB RECEIVER [ ]
   OTHER
2. MOUNTING: SURFACE [x] LOCAL [x] FLUSH [ ]
3. DIAL: DIAMETER 4.5" COLOR WHITE
4. CASE: CAST IRON [ ] ALUMINUM [ ] PHENOL [x]
   OTHER
5. RING: SCREWED [ ] HINGED [ ] SLIP [ ] STD [x]
   OTHER
6. BLOW-OUT PROTECTION: NONE [ ] BACK [ ] DISC [ ]
   SOLID FRONT [x] OTHER
7. LENS: GLASS [X] PLASTIC [ ]
8. OPTIONS: SYLPHON [ ] MATERIAL
   SNUBBER [ ]
   PRESSURE LIMIT VALVE [ ]
   MOVEMENT DAMPING [ ]
9. NOMINAL ACCURACY REQUIRED: ± 0.5%
10. MFR. & MODEL NO: REOTEMP Model# PT-45
11. PRESS. ELEMENT: BOURDON TUBE [x] BELLOWS [ ]
    OTHER:
12. ELEMENT MTL.: BRONZE [ ] STEEL [ ] 316 SS
    OTHER:
13. SOCKET MTL.: BRONZE [ ] STEEL [ ] 316 SS
    OTHER
14. CONNECTION-NPT: 1/4 IN [ ] 1/2 IN. [x] OTHER:
    BOTTOM [x] BACK [ ]
15. MOVEMENT: BRONZE [ ] SS [X] NYLON [ ]
    OTHER
16. DIAPHRAGM SEAL
    MFG. TYPE
    WETTED PART MTL. OTHER MTL.
    FILL FLUID
    PROCESS CONN. GAGE CONN.

REV.	QUAN.	TAG NO.	RANGE PSIG	OPERATING PRESSURE, PSIG	PART NUMBER	SERVICE
A	1	PI-201	0-30	10	PT-45-P-1-A-2-P16-D	INLET PRESSURE TO AIR STRIPPER
A	1	PI-231	0-60	20	PT-45-P-1-A-2-P17-D	DISCHARGE PRESSURE OF PUMP PMP-230

NOTES: *** VENDOR TO CONFIRM MODEL NO.
1. VENDOR SHALL ATTACH A STAINLESS STEEL NAMEPLATE, STAMPED WITH TAG NO.

ISA Form S20.41a

BLANK PAGE

REOTEMP

INSTRUMENTS

PRESSURE PRODUCTS

Pressure Gauges • Diaphragm Seals • Pressure Transmitters • Sanitary Products
Pressure Switches • Pressure Accessories

RPP.0906

"Service Inspired, Quality Driven"

REOTEMP INSTRUMENTS

REO*TEMP* Instrument Corporation

Table of Contents

Pressure Gauges	Pages
Specifications, Applications Info.	3 - 4
All-Stainless Gauges	5 - 6
SS/Brass Gen. Purpose Gauges	7
Utility Gauges Steel/Brass	8
Process Gauges (Phenolic/SS)	9
Test Gauges	10
Low Pressure Capsule Gauges	10
Other Pressure Gauges	11
Pressure Ranges & Codes	12
Technical Reference (dimensions, chemical compatibility)	13 - 14
Differential Gauges	15 - 17
Sanitary (3-A) Gauges	18 - 19
Diaphragm Seals	
Diaphragm Seals Introduction	20
Threaded Flush Face Seal	21
Plastic Seals	21
Diaphragm Seals - how to order	22 - 23
Flanged Flush Face Seal	24
Pancake & Extended Seals	25
ISO-Ring Seal & Accessories	26
Mini Seals & Sanitary In-line	27
Other Diaphragm Seals	28
Pressure Transmitters	
Introduction	29
Selection Guide	30
General Purpose Transmitter	31
Heavy Duty, High Accuracy Trans.	32
Intrinsically Safe Transmitter	33
Submersible Transmitter	34
Economy (OEM) Transmitter	35
Sanitary (3-A) Transmitters	36
Digital Meters For Transmitters	37
Explosion-Proof Transmitters	38
"Piggy Back" Digital Indicator	38
Transmitters Ranges & Specs	39
Pressure Switches	
Mechanical Pressure Switch	40 - 41
Series SGT	42 - 43
Pressure Accessories	
Needle Valves	44
Snubbers	45
Siphons, Restrictor Screws, Gauge Cocks	46
Pressure Services	47
Warranty	Back page

ISO 9001 REGISTERED

Established in 1965 and located in San Diego, California, REO*TEMP* Instrument Corporation is recognized as a leading manufacturer of pressure and temperature instrumentation. REO*TEMP* provides bimetal thermometers, pressure gauges, diaphragm seals, RTD's, thermocouples, and related accessories to a variety of process markets worldwide. Recognized for high quality products, exceptional customer service, on-time deliveries and innovative engineering services, REO*TEMP* is an ISO 9001 certified manufacturer.

Markets Served

Oil, Gas & Petrochemical	Waste Water
Pharmaceutical	Compost
Food & Beverage	Military
Paper & Pulp	Dairy
Mining	Power Generation
Utilities	Refrigeration
Marine	And More!

Ph (800) 648-7737 Fx (858) 784-0720 sales@reotemp.com www.reotemp.com

10656 Roselle St. San Diego, CA 92121

GENERAL SPECIFICATIONS

REO*TEMP* Pressure Gauges, manufactured under ISO 9001 quality standards, are offered in a wide variety of sizes, ranges, and configurations to meet the demands of any application. From the most rugged process gauges to the cost effective general purpose gauge, you can count on REO*TEMP* pressure gauges for long and reliable service.

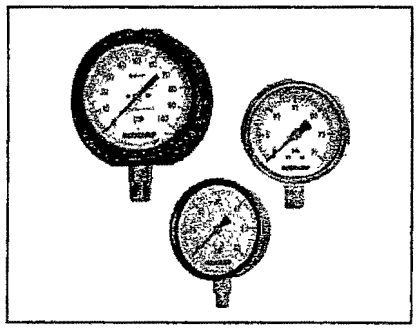

General Specifications:

Dials: Aluminum, black figures on white background. Custom dials, logos, etc. are available - consult factory.

Dial sizes: 1.5", 2", 2.5", 3", 3.5", 4", 4.5", and 6" dials are standard.

Pointers: Balanced black aluminum pointers are standard on most models. Adjustable pointers are standard on series PR and PT, and are available on certain other models.

Windows: Glass, plastic, laminated safety, and tempered glass are available.

Cases: Case materials are black steel, stainless steel, phenolic and ABS plastic. Series PC, PD, PH and PL cases are intended for dry service; all other cases can be filled at the factory, or in the field. Series PT features solid front design, which provides maximum safety with a solid wall between the window and the Bourdon tube. The entire rear of the case is designed to blow out and provide pressure relief should the Bourdon tube fail due to over pressure, corrosion, or fatigue.

Movements: The movement is the heart of the pressure gauge; its function is to accurately position the pointer in response to movement of the Bourdon tube. Reotemp movements are designed for smooth movement, low friction, and minimal play. Reotemp movements use high precision gears and low friction bearings to enhance performance, reduce hysteresis, and provide long-term accuracy and reliability. The effects of vibration on the movement can be reduced by liquid filling of the case, which both dampens movement, and lubricates contact points. For dry gauges, a special silicone dampened movement can be installed.

Bourdon Tubes: To suit a variety of media applications, Reotemp Bourdon tubes are available in phosphor bronze, AISI 316 stainless steel, and monel. If the process fluid is not compatible with any of these materials, a chemical (diaphragm) seal may be necessary. Reotemp Bourdon tubes undergo special heat treating to reduce hysteresis effects, relieving localized stresses in the solder or weld zones and enhancing long-term accuracy of the gauge.

Warranty: REO*TEMP* warrants all pressure gauges and pressure products against defective workmanship or materials under normal use and service for one year following date of shipment. Reotemp's liability is limited to repair or replacement at the factory, shipping charges prepaid. This warranty does not cover deterioration from normal wear and tear, exposure to corrosive materials, exposure to temperatures or pressures in excess of those recommended, excessive vibration, or forces or abrasion which cause deformation of component parts. This warranty is expressly in lieu of any other warranty, expressed or implied. Reotemp shall not be liable for any direct or consequential damages arising out of any defects or from any cause whatsoever.

PRESSURE GAUGE PRODUCT SELECTION

APPLICATION INFORMATION

WARNING: All gauge components should be selected after consideration of the pressure, temperature, and media characteristics, to prevent mis-application problems. Mis-application or improper installation can cause gauge damage or failure, which can result in damage to other equipment or personal injury. We suggest that users of pressure gauges become familiar with ANSI-B40.1 entitled "Gauges, Pressure and Vacuum indicating Dial Type - Elastic Element." This specification is available from American Society of Mechanical Engineers, website: www.americansocietyofmechanicalengineers.com.

To ensure safety, accuracy, and gauge life, good practice requires consideration of the following factors when selecting a pressure gauge:

Pressure Ranges: Reotemp Bourdon tube pressure gauges can measure pressures from full vacuum to 40,000 psi. Generally, a range of twice the working pressure is recommended, with maximum working pressure not exceeding 75% of the range. If pulsation occurs, working pressure should not exceed 65% of the range. Never use a gauge at pressure greater than the maximum range on the dial. Pounds per square inch (psi) ranges are standard, and several alternate single and dual ranges are available (see Ranges, p.14).

Pressurized Fluid Properties Composition: All pressure gauge components should be selected to suit the characteristics of the fluid being measured. For steam service, a siphon is required. For corrosive chemicals, stainless steel (or monel) wetted parts, or a diaphragm seal should be considered (monel wetted parts are available on special order). For fluids that solidify or leave deposits, a diaphragm seal should be considered. For oxidizing fluids, no oil should be present .

Process Temperature: Gauges with stainless steel wetted parts have welded tube and socket, and will withstand 750°F (400°C). Gauges with soldered copper alloy joints will withstand 150°F (65°C); with silver brazed joints, 250°F (120°C). Maximum process temperatures should only be reached intermittently to avoid rupture, and may result in loss of calibration or damage to other parts of the gauge.

Ambient Temperature: Normal ambient temperature limits for Reotemp pressure gauges are -30°F to 150°F (-35°C to +65°C) for dry gauges, and 23°F to 140°F (-5°C to +60°C) for glycerine filled gauges. Reotemp gauges are calibrated at 70°F (20°C). Change in ambient temperature causes +/–0.3% error per 18°F (10°C) rise/fall, respectively. Ambient error for Reotemp test gauges is +/–0.05% per +/–18°F (10°C), respectively.

> **In very hot ambient conditions**, a gauge can be remotely mounted using a diaphragm seal and/or capillary, to place the gauge in a cooler spot.

Moisture and Weather Effects: Case material should be chosen with atmospheric conditions in mind. For outdoor use, stainless steel or plastic cases are recommended. Case filling with glycerine can prevent condensation in case.

Severe Conditions: In applications involving severe pulsation, the use of snubbers and/or restrictors is recommended. Also, for vibrating or pulsating applications, liquid filling will help prevent wear and extend the service life of the gauge. Glycerine is the standard fill material. Also available (with special gasketing) are silicone and Halocarbon. Halocarbon, though quite costly, is recommended for service with oxidizing agents such as oxygen, hydrogen peroxide, chlorine, nitric acid, etc.

Mounting Method: NPT connections are located in the center back ( ), lower back ( ), or bottom ( ) of the case in most models. Rear flanges (also known as "back flanges" or "wall flanges") are available for surface mounting. For panel mounting, front flanges or "U" or "O" clamps are available. Special threads (BSP, Metric, SAE) are also available; consult Reotemp Customer Service. All Reotemp pressure gauges should be mounted in the upright position.

Accuracy: Gauges are available with accuracies from +/–0.25% (ASME grade 3A) to +/–3/2/3% (ASME grade B). Percent accuracies are expressed as percent of full scale. As a rule, higher accuracies are found in larger gauges, and/or reflect more costly components.

REOTEMP INSTRUMENTS
Telephone: (800) 648-7737 FAX (858) 784-0720 • sales@reotemp.com • www.reotemp.com

4½" Process Gauges

Series PT

- Solid Front / Blowout Back
- All Stainless Steel Internal Parts
- Adjustable Pointer
- Glycerine Filled or Dry/Fillable
- Repairable

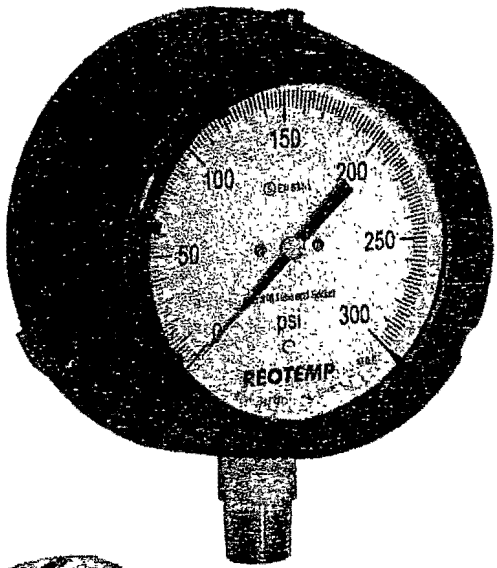

Specifications

Case: "Phenolic" (Fiberglass Reinforced Thermoplastic) Solid Front, Blowout Back

Ring: Fiberglass Reinforced Thermoplastic Screwed Ring, Removable

Lens: Tempered Glass

Dial: Aluminum, Black Figures on White Background

Pointer: Adjustable, Aluminum, Black

Wetted Parts: 316 St. Steel with Restrictor screw

Temperature: Ambient: 0 to 150°F (Glycerine Filled)
Process: -30 to 400°F (Dry)

Accuracy: 0.5% Full Scale

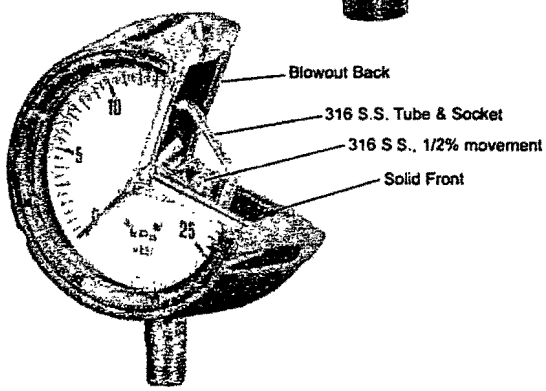

Applications

Reotemp Series PT Process Gauge is designed to withstand corrosive atmospheres and media, pulsation and vibration; a very rugged gauge engineered for the process industries. The solid front/blowout back provides a high degree of user safety.

How to Order

PT — 45 — P — 1 — A — 4 — P23 — G

Dial:	Case:	Tube & Socket:	Mounting:	Connection:	Range Code:	Filling:
45 = 4.5"	P = Fiberglass Reinforced Thermoplastic	1 = 316 St. Steel 3 = Monel	A = Bottom, Direct with Wall Mount	4 = 1/4" NPT 2 = 1/2" NPT	See Page 12 for Range Codes Available Ranges: Vacuum, compound, and 15 psi to 20,000 psi	D = Dry (Fillable) G = Glycerine Other fills on request.

Options:	
• Custom / Logo Dials	• Plastic Lens
• Removed Restrictor Screw	• Laminated Safety Glass
• Chemical Seals	• Flush Mounting Ring
	• Electric Contacts
	• Peak Indicator

Service Inspired, Quality Driven

PRESSURE GAUGE RANGES & CODES

Below are codes for standard pressure ranges. Many other ranges are available - consult REO*TEMP* or your REO*TEMP* distributor.

Vacuum Ranges

psi		DUAL SCALE - psi & metric						Single Scale-METRIC					
psi		psi & bar		psi & kg/cm2		psi & kPa		bar		kg/cm2		kPa	
Code	Range	Code	Range	Code	Range	Code	Range	Code	Range	Code	Range	Code	Range
P01	-30/0 "Hg	D01	"Hg & -1/0 bar	G01	"Hg & -1/0 kg/cm2	L01	"Hg & -100/0 kPa	B00	-1/0 bar	K00	-1/0 kg/cm2	A00	-100/0 kPa

Compound Ranges

psi		DUAL SCALE - psi & metric						Single Scale-METRIC					
"Hg/0/psi		psi & bar		psi & kg/cm2		psi & kPa		bar		kg/cm2		kPa	
Code	Range	Code	Range	Code	Range	Code	Range	Code	Range	Code	Range	Code	Range
P02	-30"Hg/0/15 psi	D02	psi & -1/0/1 bar	G02	psi & -1/0/1 kg/cm2	L02	psi & -100/0/100 kPa	B01	-1/0/1 bar	K01	-1/0/1 kg/cm2	A01	-100/0/100 kPa
P03	-30/0/30	D03	psi & -1/0/2	G03	psi & -1/0/2	L03	psi & -100/0/200	B02	-1/0/2	K02	-1/0/2	A02	-100/0/200
P04	-30/0/60	D04	psi & -1/0/4	G04	psi & -1/0/4	L04	psi & -100/0/400	B04	-1/0/4	K04	-1/0/4	A04	-100/0/400
P05	-30/0/100	D05	psi & -1/0/7	G05	psi & -1/0/7	L05	psi & -100/0/700	B07	-1/0/7	K02	-1/0/7	A07	-100/0/700
P06	-30/0/160	D06	psi & -1/0/11	G06	psi & -1/0/11	L06	psi & -100/0/1,100	B011	-1/0/11	K011	-1/0/11	A011	-100/0/1,100
P07	-30/0/200	D07	psi & -1/0/14	G07	psi & -1/0/14	L07	psi & -100/0/1,400	B014	-1/0/14	K014	-1/0/14	A01	-100/0/1,400
P08	-30/0/300	D08	psi & -1/0/20	G08	psi & -1/0/20	L08	psi & -100/0/2,000	B020	-1/0/20	K020	-1/0/20	A020	-100/0/2,000

Pressure Ranges

psi		DUAL SCALE - psi & metric						Single Scale-METRIC					
psi		psi & bar		psi & kg/cm2		psi & kPa		bar		kg/cm2		kPa	
Code	Range	Code	Range	Code	Range	Code	Range	Code	Range	Code	Range	Code	Range
P15	0-15 psi	D15	psi & 0-1 bar	G15	psi & 0-1 kg/cm2	L15	psi & 0-100 kPa	B1	0-1 bar	K1	0-1 kg/cm2	A1	0-100 kPa
P16	0-30	D16	psi & 0-2	G16	psi & 0-2	L16	psi & 0-200	B2	0-2	K2	0-2	A2	0-200
P17	0-60	D17	psi & 0-4	G17	psi & 0-4	L17	psi & 0-400	B4	0-4	K4	0-4	A4	0-400
P18	0-100	D18	psi & 0-7	G18	psi & 0-7	L18	psi & 0-700	B7	0-7	K7	0-7	A7	0-700
P19	0-160	D19	psi & 0-11	G19	psi & 0-11	L19	psi & 0-1,100	B11	0-11	K11	0-11	A11	0-1,100
P20	0-200	D20	psi & 0-14	G20	psi & 0-14	L20	psi & 0-1,400	B14	0-14	K14	0-14	A14	0-1,400
P21	0-300	D21	psi & 0-20	G21	psi & 0-20	L21	psi & 0-2,000	B20	0-20	K20	0-20	A20	0-2,000
P22	0-400	D22	psi & 0-28	G22	psi & 0-28	L22	psi & 0-2,800	B28	0-28	K28	0-28	A28	0-2,800
P23	0-600	D23	psi & 0-40	G23	psi & 0-40	L23	psi & 0-4,000	B40	0-40	K40	0-40	A40	0-4,000
P24	0-800	D24	psi & 0-55	G24	psi & 0-55	L24	psi & 0-5,500	B55	0-55	K55	0-55	A55	0-5,500
P25	0-1,000	D25	psi & 0-70	G25	psi & 0-70	L25	psi & 0-7,000	B70	0-70	K70	0-70	A70	0-7,000
P30	0-1,500	D30	psi & 0-100	G30	psi & 0-100	L30	psi & 0-10,000	B100	0-100	K100	0-100	A100	0-10,000
P31	0-2,000	D31	psi & 0-140	G31	psi & 0-140	L31	psi & 0-14,000	B140	0-140	K140	0-140	A140	0-14,000
P32	0-3,000	D32	psi & 0-200	G32	psi & 0-200	L32	psi & 0-20,000	B200	0-200	K200	0-200	A200	0-20,000
P33	0-4,000	D33	psi & 0-280	G33	psi & 0-280	L33	psi & 0-28,000	B280	0-280	K280	0-280	A280	0-28,000
P34	0-5,000	D34	psi & 0-350	G34	psi & 0-350	L34	psi & 0-35,000	B350	0-350	K350	0-350	A350	0-35,000
P35	0-6,000	D35	psi & 0-400	G35	psi & 0-400	L35	psi & 0-40,000	B400	0-400	K400	0-400	A400	0-40,000
P36	0-8,000	D36	psi & 0-550	G36	psi & 0-550	L36	psi & 0-55,000	B550	0-550	K550	0-550	A550	0-55,000
P37	0-10,000	D37	psi & 0-700	G37	psi & 0-700	L37	psi & 0-70,000	B700	0-700	K700	0-700	A700	0-70,000
P38	0-15,000	D38	psi & 0-1,000	G38	psi & 0-1,000	L38	psi & 0-100,000	B1K	0-1,000	K1K	0-1,000	A1K	0-100,000
P39	0-20,000	D39	psi & 0-1,400	G39	psi & 0-1,400	L39	psi & 0-140,000						
P40	0-30,000	D40	psi & 0-2,000	G40	psi & 0-2,000	L40	psi & 0-200,000						
P41	0-40,000	D41	psi & 0-2,800	G41	psi & 0-2,800	L41	psi & 0-280,000						
P42	0-50,000	D42	psi & 0-3,500	G42	psi & 0-3,500	L42	psi & 0-350,000						
P60	3-15 (receiver - several ranges available - specify.)												

Low Pressure Ranges (for use on PC Series)

INWC		oz/in^2		mbar		Other Low Pressure Ranges Avail.	CUSTOM RANGES
Code	Range	Code	Range	Code	Range		
P50	0-10"WC					mm H_2O mmHg(torr) kPa	We will draw a custom range for your application - contact factory or your REO*TEMP* distributor examples: Tons on Ram Refrigeration Scales Tank level
P51	0-15	Z51	0-8 oz/in^2	M51	0-40 mbar		
P52	0-30	Z52	0-20	M525	0-100		
P53	0-60	Z53	0-30	M53F	0-150		
P54	0-100			M54	0-250		
P55	0-160			M55	0-400		
P56	0-200	Z56	0-100	M56	0-500		

REOTEMP INSTRUMENTS
Telephone. (800) 648-7737 FAX (858) 784-0720 · sales@reotemp.com · www.reotemp.com

PRESSURE GAUGE TECHNICAL REFERENCE

PRESSURE CONVERSION TABLE								
psi	atms.	bar	kPa	Kg/cm²	oz/in²	in. Hg	mm Hg (Torr)	in. H_2O
1	0.068	0.069	6.895	0.07	16	2.036	51.72	27.68
14.7	1	1.013	101.3	1.033	235.1	29.92	760	406.8
14.5	0.967	1	100	1.02	232.1	29.53	750.1	401.9
0.145	0.01	0.01	1	0.01	2.321	0.295	7.501	4.019
14.22	0.968	0.981	98.07	1	227.6	28.96	735.6	393.7
0.063	0.004	0.004	0.431	0.004	1	0.127	3.232	1.73
0.491	0.033	0.034	3.386	0.035	7.858	1	25.4	13.6
0.019	0.001	0.001	0.133	0.001	0.309	0.039	1	0.535
0.036	0.002	0.002	0.249	0.003	0.578	0.074	1.868	1

ASME B40.1 ACCURACY GRADES				
Grade	Accuracy	Grade	Accuracy	
4A	+/- 0.1% f.s.	A	2-1-2%	(+/- 1% f.s. over middle 1/2 of scale)
3A	+/- 0.25% f.s.	B	3-2-3%	(+/- 2% f.s. over middle 1/2 of scale)
2A	+/- 0.5% f.s.	C	4-3-4%	(+/- 3% f.s. over middle 1/2 of scale)
1A	+/- 1.0% f.s	D	+/- 5% f.s.	

Chemical Compatibility Table

Acetic Acid	S	Dextrine	B	Oil (refined)	B
Acetone	S	Ethyl Acetate	B	Oxygen	B
Acetylene	S	Ethyl Cellulose	S	Paraffin	B
Alcohol	B	Ethylene	B	Phosphoric Acid	S
Alums	S	Ethylene Dibromide	S	Photographic Solutions	S
Aluminum Sulfate	S	Ethylene Glycol	B	Pickling Solutions	S
Ammonia	S	Ferric Nitrate	S	Picric Acid	S
Ammonium Carbonate	S	Ferric Sulfate	S	Picric Acid (dry)	S
Beer	B	Formaldehyde	S	Potassium Cyanide	S
Benzine	B	Freon	B	Potassium Permanganate	S
Benzol	B	Gallic Acid	S	Prestone	B
Benzyl Alcohol	S	Gas (for lighting	B	Salicylic Acid	B
Bleach Liquors	S	Gasoline	B	Sea Water	M
Bordeaux Mixture	B	Gasoline (refined	S	Silver Nitrate	S
Butane	S	Glucose	M	Sodium Nitrate	S
Butanol	B	Glycerine	B	Sodium Peroxide	S
Butyric Acid	S	Hydrocyanic Acid	S	Sodium Phosphate	S
Calcium Bisulfite	S	Hydrogen	S	Sodium Sulfate	S
Calcium Chloride	M	Hydrogen Peroxide	S	Sodium Sulfite	S
Calcium Hydroxide	S	Kerosene	B	Sulfur Dioxide (dry)	S
Carbon Dioxide (dry)	S	Lacquers	B	Sulfuric (75%)	S
Carbon Bisulfide	S	Lactic Acid	S	Sulfurous Acid	S
Casein	S	Lysol	S	Toluene	B
Chloroform	S	Magnesium Hydroxide	M	Vegetable Oils	S
Chromic Acid	S	Magnesium Sulfate	S	Vinegar	S
Citric Acid	S	Mercury	S	Water	B
Coal Gas	B	Naphtha	B	Whiskey	S
Copper Sulfate	S	Nickel Acetate	S	Wines	S
Cottonseed Oil	S	Nitric Acid (pure)	S	Zinc Sulfate	S
Creosote (crude)	S	Oil (lubricating)	B		
B = Brass (Copper Alloy)		M = Monel		S = Stainless Steel	

Note: this table is provided as a reference only and is accurate to the best of Reotemp's knowledge. Reotemp assumes no responsibility for the accuracy of this information.

PRESSURE GAUGE TECHNICAL REFERENCE

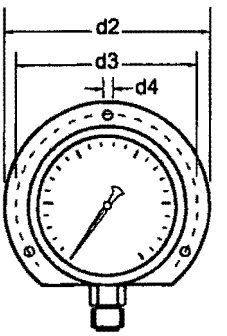

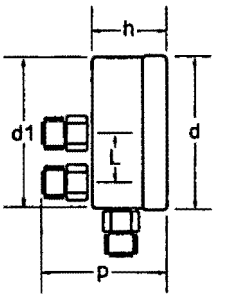

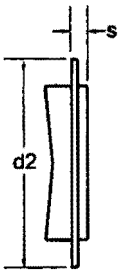

Pressure Gauge Dimensions

		D	D1	D2	D3	D4	H	L	S	P	P dim based on
PD15N,X	mm	44	40	-	-	-	24	-	-	44	1/8"NPT
	in.	1.73	1.57				0.94			1.73	
PD20N,X	mm	55	50.8	71	60	3.6	28	-	-	50	1/8"NPT
	in.	2.17	2.00	2.80	2.36	0.14	1.10			1.97	
PD25N,X	mm	68	62.5	85	75	3.6	29	-	4	50	1/4"NPT
	in.	2.68	2.46	3.35	2.95	0.14	1.14		0.16	1.97	
PD40Y,S	mm	101.5	98	130	118	6	42	29.5	5.5	80	1/2"NPT
	in.	4.00	3.86	5.12	4.65	0.24	1.65	1.16	0.22	3.15	
PD60Y,S	mm	160	158	190	178	6	9	29.5	5.5	80	1/2"NPT
	in.	6.30	6.22	7.48	7.01	0.24	1.93	1.16	0.22	3.15	
PD40B	mm	101.5	98	130	118	6	32	-	-	-	-
	in.	4.00	3.86	5.12	4.65	0.24	1.26				
PC25N	mm	62.5	62.5	85	75	3.6	34	-	4	50	1/4"NPT
	in.	2.46	2.46	3.35	2.95	0.14	1.34		0.16	1.97	
PC40S	mm	101	98.5	130	116	6	49	-	5.5	80	1/4"NPT
	in.	3.98	3.88	5.12	4.57	0.24	1.93		0.22	3.15	
PC60S	mm	160	153	190	178	6	49	-	5.5	80	1/4"NPT
	in.	6.30	6.02	7.48	7.01	0.24	1.93		0.22	3.15	
PM25C	mm	68	63	85	75	3.6	30	135	7	54	1/4"NPT
	in.	2.68	2.48	3.35	2.95	0.14	1.18	5.3	0.28	2.13	
PM40C	mm	110	101	130	118	6	47	-	-	-	-
	in.	4.33	3.98	5.12	4.65	0.24	1.85				
PG25C	mm	68	63	85	75	3.6	30	-	7	54	1/4"NPT
	in.	2.68	2.48	3.35	2.95	0.14	1.18	-	0.28	2.13	
PG35S	mm	89	80	110	95	5	31	19	15	60	1/4"NPT
	in.	3.5	3.15	4.32	3.75	0.2	1.23	0.73	0.6	2.36	
PG40C	mm	110	101	130	118	6	47	34.5	12.5	65	1/2"NPT
	in.	4.33	3.98	5.12	4.65	0.24	1.85	1.36	0.49		
PR40S	mm	111	101	130	118	6	48	34.5	19	80	1/2"NPT
	in.	4.37	3.98	5.12	4.65	0.24	1.89	1.36	0.75	3.15	
PR60S	mm	161	150	190	175	6	50	53	25	80	1/2"NPT
	in.	6.34	5.91	7.48	6.89	0.24	1.97	2.09	0.98	3.15	
PA40A	mm	114	100	130	118	6	48	-	-	-	-
	in.	4.49	3.94	5.12	4.65	0.24	1.89				
PS40S	mm	111	100	130	116	6	61	-	-	-	-
	in.	4.37	3.94	5.12	4.57	0.24	2.40				
PS60S	mm	162	150	190	175	6	64	-	-	-	1/2"NPT
	in.	6.38	5.91	7.48	6.89	0.24	2.52				
PL60	mm	161	150	190	175	6	50	53	25	88	1/2"NPT
	in.	6.34	5.91	7.48	6.89	0.24	1.97	2.09	0.98	3.46	
PT45P	mm	129	148	148	137	6	87	-	-	-	-
	in.	5.08	5.83	5.83	5.39	0.24	3.43				

Note: diagrams not to scale.

TRADEMARKS: FLOUROLUBE - TM Occidental Petroleum Corp. MONEL - TM Huntington Alloys, Inc. HALOCARBON - TM Halocarbon Corp. Note: All specifications in this catalog are subject to change.

REOTEMP INSTRUMENTS
Telephone: (800) 648-7737 FAX (858) 784-0720 · sales@reotemp.com · www.reotemp.com

DIAPHRAGM SEALS

INTRODUCTION

REO*TEMP* Diaphragm Seals (or Chemical Seals) use a flexible barrier, or *diaphragm,* to isolate a pressure sensor (gauge, switch, transmitter, or transducer) from adverse effects of the process fluid.

Diaphragm seals are useful to:

1.) *Protect the sensor* from the process media (corrosive, abrasive, viscous, or crystallizing media)

2.) *Protect the process* from the sensor (sanitary process requiring clean-out, or high purity media).

HOW IT WORKS:

A diaphragm seal, when properly mounted to its sensor and filled, will accurately transmit process pressure to the instrument. Pressure exerted on the flexible diaphragm is transmitted hydraulically to the instrument through the fill fluid, which fills the void between the diaphragm and the instrument, (including the bourdon tube, in the case of a pressure gauge.)

APPLICATION CONSIDERATIONS: The following should be considered when choosing a diaphragm seal:

1. Process Characteristics: Pressure, temperature, (see tables, this page) chemical compatibility and viscosity.
2. Seal Mounting: Connection to process (threaded, flanged, clamped, in-line) Connection to instrument (usually NPT).
3. Ambient Characteristics: Temperature, corrosive atmosphere, etc.
4. Instrument Considerations: Sufficient fluid displacement is required to drive instrument through its full range (this means, for example, you can't put a large gauge on a small seal); remote instrument placement requires a capillary connecting instrument to seal.
5. Vacuum Considerations: High vacuums (over 25" Hg vac.) or vacuums with high temperatures require special fill selection, preparation, and procedures, as well as careful diaphragm selection.

NOTE: Improper selection may result in system failure and possible damage or injury. REO*TEMP* can provide application assistance, but final compatibility is the responsibility of the buyer. Proper selection of seal can reduce or eliminate any additional system error caused by adding a Diaphragm Seal to your instrument.

SEAL TYPES:

Standard Seals (pp 22-23): include Threaded off-line, threaded in-line, and flanged off-line types in many materials for a variety of applications:

Sanitary Seals (pg 28): are designed for food, pharmaceutical and other sanitary applications. Available to fit most standard piping systems, including "Tri-clamp", "I" line, and others. For straight- thru and in-line sanitary seals with no crevices, see our lit #ILS.

Mini-Seals (pg 27): are designed for low-displacement applications where size or economy are considerations.

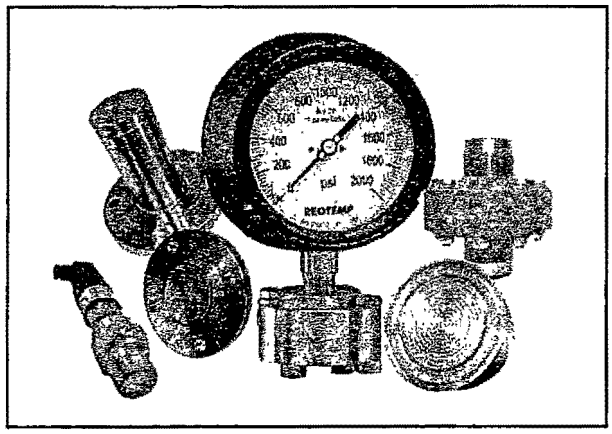

SPECIAL DESIGNS: REO*TEMP* is ready to work with you on any high-performance diaphragm seal application, (that might exceed the stated limit below) such as high vacuum, high temperature, high sterility, custom design or high static pressure with a low differential span, or high vacuum with high temperature.

Temperature Limits

Maximum Temperature	Diaphragm Material	Lower Housing
650°F	Welded metal	Metal
450°F	Teflon	Metal
300°F	Viton	Metal
140°F	-	Nonmetal

Pressure Limits

	psi	Lower Housing	
Maximum working pressure	1,500	metal, with ss bolting	(at 100°F)
	2,500	metal, std bolting	(at 100°F)
	5,000	metal, hi-press bolting	(at 100°F)
	per flange rating	ASA flange	(per flange spec)
	300	non-metallic	(at 140°F)
	Diaphragm	size 5 seal	size 6 seal
Min. working Pressure	Metal	25 psi	10 psi
	Teflon	20 psi	8" W.C.
	Viton	5" W.C.	n/a
Vacuum Limits	Metal	-21" Hg	-24" Hg
	Teflon	-23" Hg	-26" Hg
	Viton	-29" Hg	n/a

MATERIALS: Lower housings: 316SS standard, with a large selection to suit a wide variety of applications (see Table 1, pg. 23)

Diaphragms: Standard metal diaphragms are convoluted and made of 316SS. Many other materials are available, for corrosion resistance or extra sensitivity. (See Table 6, pg. 23)

Gaskets: Standard gaskets are teflon on the process side of diaphragm (grafoil for hi temp.), and viton on the fill side. Other materials are available.

REOTEMP INSTRUMENTS
Telephone: (800) 648-7737 FAX (858) 784-0720 • sales@reotemp.com • www.reotemp.com

THREADED FLUSH FACE SEALS

Dimensional Drawing

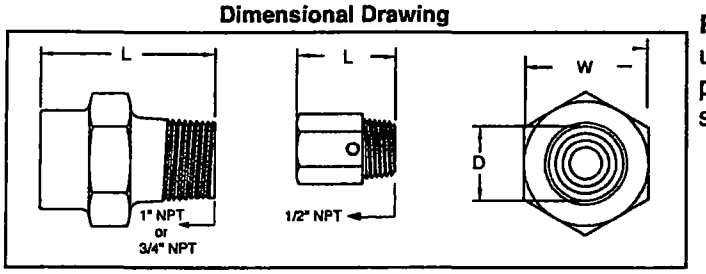

REO*TEMP*'s Flush-Face diaphragm seals are useful in applications where a continuous flow of process across the diaphragm is required to prevent solids buildup.

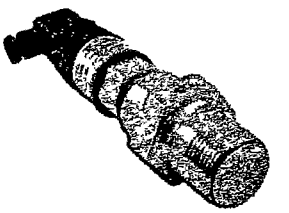

HOW TO ORDER

Model	Instrument Conn.	Process Conn.	Max working Pressure (@100F)	Minimum Recommended Pressure Range		
				Gauges (psi)		Transducers
				2 1/2"	4"	
DSFF21S DSFF41S	1/2" NPT 1/4" NPT	1" NPT	1500 psi	0-15	0-60	30 psi
DSFF23S DSFF43S	1/2" NPT 1/4" NPT	3/4" NPT	2500 psi	0-60	N/A	15 psi
DSFF42S	1/4" NPT	1/2" NPT	5000 psi	0-100	N/A	100 psi
DSF4G1S	1/4" NPT	1" BSPP	8000 psi	0-30	0-60	30 psi

*Note: Use largest diaphragm possible, for smallest temperature effect.

Dimensions (Inches)

Process Conn. NPT	Diaphragm Diameter "D"	Overall Length "L"	Width "W"
1"	1.125"	2.65"	1.75"
3/4"	.875"	2.47"	1.75"
1/2"	.675"	1.43"	.875"
1" BSPP	.980"	—	1.62"

SERIES PLS - PLASTIC SEALS

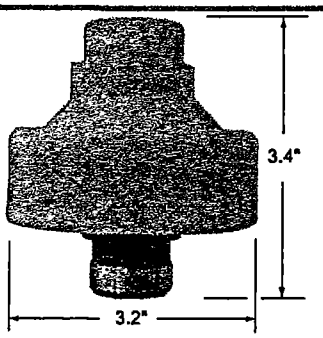

- **Teflon Diaphragm**
- **Isolate Pressure Instruments from Corrosive Media**
- **High Chemical Resistance**
- **Upper housing is glass filled polypropylene**
- **Heavy Duty Design for Safety**
- **Ideal for waste water treatment**

REO*TEMP*'s Series PLS Plastic Seals allow pressure gauges, switches, or transmitters to be used in corrosive applications compatible with wetted materials.

HOW TO ORDER

PLS1 — [4] — [4] — [T] — [P]

wetted

Instrument Connection:	Process Connection:	Diaphragm Material:	Lower Housing:					Options:
			Z=PVC P=Polypropylene K=Kynar (PVDF)					
4=1/4 NPT 2=1/2 NPT	4=1/4 NPT 2=1/2NPT	T= Teflon (PTFE) Bonded Hypalon	Code	*MWP at 68° F	*MWP at 140° F	*MWP at 170° F	Operating temp. range	-Pressure Gauge -Gauge mount & fill (glycerin or silicone)
			Z =	150 psi	15 psi	------	14/140° F	
			P =	150 psi	65 psi	15 psi	46/176° F	
			K =	150 psi	105 psi	75 psi	22/248° F	

*MWP = Max Working Pressure

DIAPHRAGM SEALS

HOW TO ORDER

TABLE 1 Seal Series	TABLE 2 Seal Size	TABLE 3 Configuration	TABLE 4 Instrument Connection	TABLE 5 Process Connection	TABLE 6 Diaphragm Material	TABLE 7 Lower (process) Housing Material	TABLE 8 Upper (instrument) Housing Material
EXAMPLE:							
W	- 5	- 15	- 4	- 2	- S	- S	- C

TABLE 1 Seal Series

- W - Welded metal diaphragm
- T - Teflon diaphragm (high sensitivity, chemical resistance)
- V - Viton diaphragm - (most sensitive, for low pressures)

TABLE 2 Seal Size

- 5 - Standard size - Seal dia. = 3.25" in threaded models. Diaphragm dia. = 2.25"
- 6 - Large size - (Preferred for low pressure, hi displacement, or hi sensitivity.) Seal dia. = 4" in threaded models. Diaphragm dia. = 3"
- 7 - Large size - Seal diameter, 5.2". Diaphragm dia. = 4.1"

TABLE 4 Instrument Connection

- 4 - 1/4" NPTF
- 2 - 1/2" NPTF

TABLE 5 Process Connection

- 4 - 1/4" NPTF
- 2 - 1/2" NPTF
- 3 - 3/4" NPTF
- 1 - 1" NPTF
- F - Flanged - specify flange size and pressure rating (e.g. 1 1/2", 150 lb) or insert "V" codes from Table A see p. 24 (e.g. V41=1 1/2" 150#)

TABLE 3 - Configuration

Threaded, Off-Line

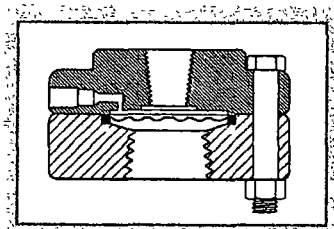

- 10 - Replaceable diaphragm - non cleanout (not available with series "W")
- 11 - Same as 10, with flush port
- 15 - Cleanout style - lower housing can be removed without losing fill. (Available with Series W, T, V)
- 16 - Same as 15, with flush port

Flanged, Off-Line - with cleanout

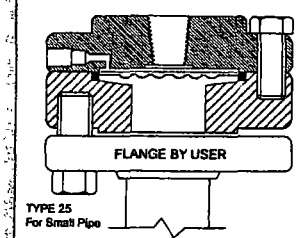

- 25 - for 1/2", 3/4" pipe size (1" in size 6)
- 26 - Same as 25, with flush port

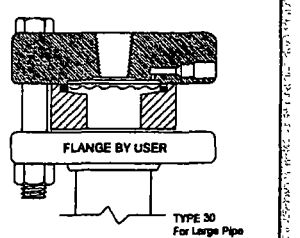

- 30 - for 1 1/2" pipe to 3" pipe size (1" in size 5)
- 31 - Same as 31, with flush port

In-Line, Flow-Thru - with cleanout

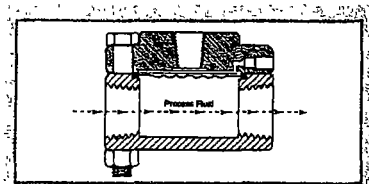

- 35 - Threaded (shown) - for 1/4" to 1" pipe
- 40 - Socket Weld - for 1/4" to 1" pipe
- 45 - Saddle Weld - for 1" to 8" pipe
- 50 - Butt Weld - for 1" to 12" pipe

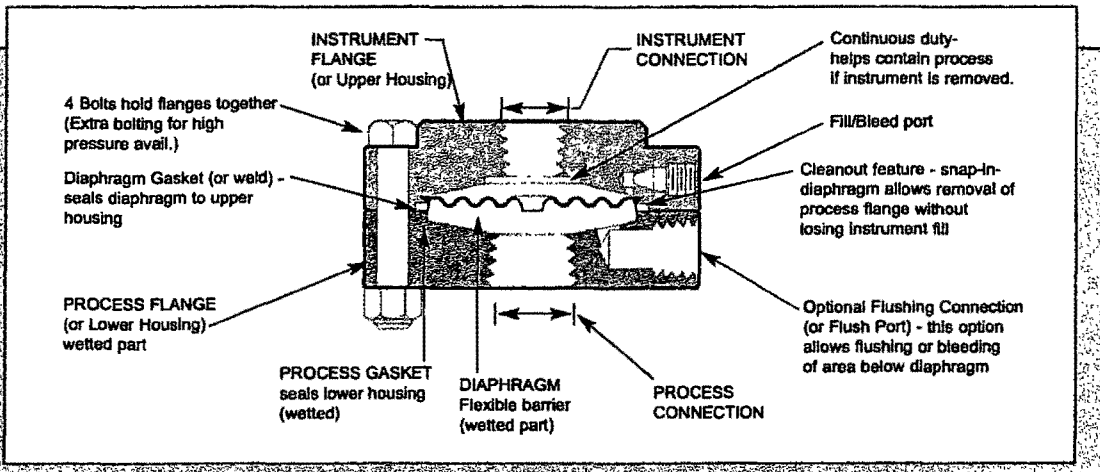

TABLE 6
Diaphragm Material (wetted)

MOST COMMON
- S - 316 S.S.
- T - Teflon
- *V - Viton
- D - Carpenter 20
- *F - 304 S.S.
- G - Hastelloy B
- H - Hastelloy C
- J - Titanium
- L - 316LSS, teflon coated
- M - Monel
- N - Nickel
- U - Tantalum
- X - Gold Plated Diaphragm
- *Y - Inconel

Size 5 only.

TABLE 7
Lower Housing Material (wetted)

MOST COMMON
- S - 316 S.S.
- T - Teflon
- *L - Teflon lined
- Z - PVC
- B - Brass
- C - Steel
- D - Carpenter 20
- F - 304 S.S.
- G - Hastelloy B
- H - Hastelloy C-276
- J - Titanium
- K - Kynar
- M - Monel
- N - Nickel
- P - Polypropylene
- U - Tantalum
- UL - Tantalum Lined
- W - CPVC
- Y - Inconel

**Available only on types 25 & 30, 1" and larger.*

TABLE 8
Upper Housing Material (including bolts)

- C - Carbon Steel (standard)
- S - 316 Stainless
- F - 304 Stainless

OPTIONS:

- HI Pressure bolting
- Non-Stick Teflon coating on metal diaphragm
- *Socket weld connections
- High temp. gasketing
- Stainless steel bolting (reduces pressure rating up to 50%)
- Capillary Lines

Fill Fluids Fill Fluids should be chosen with care. The fluid must be compatible with the process medium in case the diaphragm is ruptured. Compatibility of fill fluid with process is the user's responsibility.

FLUID	TEMPERATURE LIMITS	VISCOSITY, CS, 77° F	NOTES
Silicone, DC 200	-50 to 450° F	20	our standard fill
Silicone, DC 704	+50 to 600° F	44	Hi-temp fill
Silicone, DC 710	+30 to 700° F	500	Hi-temp fill
Neobee M-20	-4 to 320° F	10	food grade
Glycerin	+30 to 300° F	1110	for food; not recomm. for capillary
Halocarbon	-40 to 400° F	6	inert, for use with oxidizers (must not contact Al, Mg)

not to be used with strong oxidizers, such as chlorine, oxygen, etc.

Other fills available: consult factory.

Credits: Viton, Teflon, Kynar, TM DuPont, Inc., Carpenter 20 - TM Carpenter Steel Co., Inconel, Monel - TM Huntington Alloys, Inc., Hastelloy - TM Cabot Corp., Halocarbon - TM Halocarbon Corp.

FLUSH FACE FLANGED SEALS

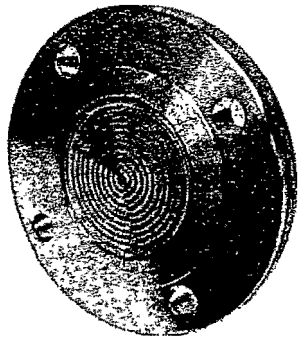

REO*TEMP*'s Flush-Face diaphragm seals are useful in applications where a continuous flow of process across the diaphragm is required to prevent solids buildup, and a one-piece, all-welded construction is desired.

- **Flange type with bolt holes**
- **Seal is bolted to raised-face flange in process**
- **Center instrument exit**
- **Instrument can be mounted directly or connected via capillary**
- **Ideal for gauges, transmitters, or dP transmitters**

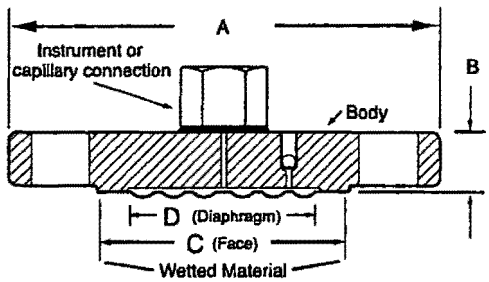

Table (A)
Process/ Instrument Connection Codes

Process Connection		Instrument Connection		
ANSI RFF		1/4" NPT	1/2" NPT	Welded Capillary
1"	150#	V21	V22	W22
1 1/2"		V41	V42	W42
2"		V51	V52	W52
3"		V61	V62	W62
4"		V71	V72	W72
1"	300#	V23	V24	W24
1 1/2"		V43	V44	W44
2"		V53	V54	W54
3"		V63	V64	W64
4"		V73	V74	W74
1 1/2"	600#	V45	V46	W46
2		V55	V56	W56
3		V65	V66	W66

Other configurations available - call factory.

Table (B) Dimensions (inches)

Process Connection (ANSI RFF)		A	B*	C	D (nominal)
1 1/2"	150#	5.00	.69	2.88	1.5
2"		6.00	.75	3.62	2.4
3"		7.50	.94	5.0	3.5
4"		9.0	.94	6.19	3.5
1 1/2"	300#	6.12	.81	2.88	1.5
2"		6.50	.88	3.62	2.4
3"		8.25	1.12	5.0	3.5
4"		10.0	1.25	6.19	3.5
1 1/2"	600#	6.1	1.13	2.88	1.5
2"		6.5	1.25	3.62	2.4
3"		10.0	1.50	5.0	3.5

*Note: For insert body design (for exotic wetted parts), add .03 to "B"

HOW TO ORDER

	Seal type		Flange Process Connection		Welded Diaphragm Material (wetted)		Body Material		Options
M9	—	BF	—	V41	—	S	—	S	—	

Seal type	Flange Process Connection	Welded Diaphragm Material (wetted)	Body Material (wetted) (BF only)	Options
BF = Std. Seal (body is Wetted) BRF = Integral face/Diaphragm (Body material is not wetted)	Choose Flange Connection Code from table (A) example: V41 = 1/4" NPT x 1 1/2" 150#	S = 316SS G = Hast B2 H = Hast C276 Y = Inconel 600 M = Monel 400 N = Nickel 200 U = Tantalum J = Titanium (requires titanium body)	C = Carbon Steel S = 316SS	H = Handles (for flanges over 600#)

REOTEMP INSTRUMENTS
Telephone: (800) 648-7737 FAX (858) 784-0720 · sales@reotemp.com · www.reotemp.com

PANCAKE (WAFER) SEALS

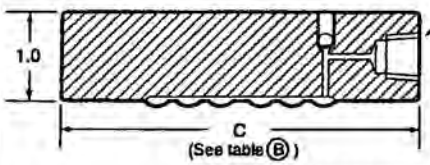

- Flange type - no bolt holes.
- Mounts between open process flange and cover flange
- Instrument connected via side capillary connection
- Ideal for gauges, transmitters, or dP transmitters

How To Order

M9 — Diaphragm Style — Flange Size — Instrument Connection — Diaphragm Material — Body Material

Diaphragm Style	Flange Size	Instrument Connection	Diaphragm Material (wetted)	Body Material (wetted) (BC only)
BC = Diaph. + Body wetted BRC = Body not wetted	2 = 2" (150# to 2500#) 3 = 3" (150# to 2500#) 4 = 4" (150# to 1500#)	4 = 1/4" NPTF Capillary fitting W = 10 mm Capillary weld fitting	S = 316SS H = Hast. C M = Monel U = Tantalum J = Titanium	S = 316SS C = Carbon SH H = Hast. C M = Monel J = Titanium

(Note: Titanium diaph. requires titanium body)

To Order Cover Flange: M9XCF- (2",3", or 4") - (150# to 2,500#) - (S = 316SS, C = Carbon Steel) example: M9XCF- 2" - 150#- S

EXTENDED FLANGED SEALS

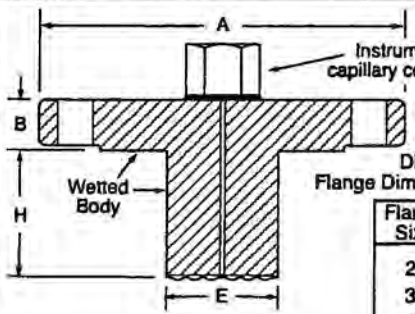

Dimensions
Flange Dim., see table Ⓑ p.24

Flange Size	"E"
2"	1.9"
3"	2.99"
4"	3.7"

- Standard & Custom Lengths
- Ideal for highly viscous and dry powder applications
- Eliminates dead space in piping
- Used for flush mounting in thick-walled vessels

How To Order

M9 EXT — RF Flange Size/ Process Conn. — Welded Diaph. Material — Body/Face Material — Flange Material — Extension Length (H)

RF Flange Size/ Process Conn.	Welded Diaph. Material (wetted)	Body/Face Material (wetted)	Flange Material	Extension Length (H)
See Table Ⓐ, p. 24 Example V52 = 2", 150#, 1/2" NPT W52 = 2", 150#, welded capillary connection Flange Sizes: 2", 3", 4" Rating: 150#, 300#, 600#	S = 316SS H = Hast C 276 F = 304SS M = Monel 400 Other materials available	S = 316SS F = 304SS H = Hast C 276 M = Monel	S =316SS C = Carbon Steel	2 = 2.0" 4 = 4.0" 6 = 6.0"

ISO - RING SEAL

- In-Line Flow-thru design
- Mounts between pipe flanges
- Ideal for waste water, slurries, abrasives
- Tough but sensitive elastomer lining
- Can mount multiple instruments on one seal

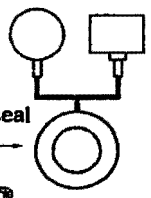

Dimensions ISO-Ring

Pipe Size	A	B	Approx. Shipping Wt.
2"	6- 15/16"	2"	3 lbs
3"	8- 3/16"	2"	6 lbs
4"	9"	1- 1/2"	8 lbs
5"	10- 1/4"	1- 1/2"	10 lbs
6"	11- 3/16"	1- 1/2"	12 lbs
8"	13- 3/8"	1- 1/2"	16 lbs
10"	15- 9/16"	1- 1/2"	20 lbs
12"	17- 9/16"	1- 3/4"	25 lbs
14"	19- 15/16"	1- 3/4"	50 lbs
16"	21- 15/16"	2"	60 lbs
18"	24- 3/16"	2"	70 lbs
20"	26- 1/16"	2"	80 lbs

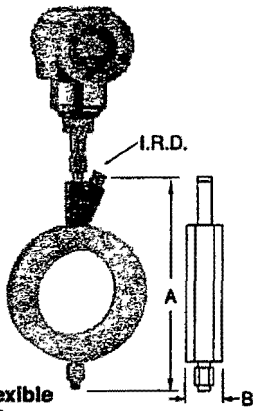

HOW TO ORDER

	Wafer or Bolt Thru	Body Material	End Flange Material	Type	Pipe Size	Inner Flexible wall
OR —	R	CS	1	N	020	1

Wafer or Bolt Thru	Body Material	End Flange Material (wetted)	Type	Pipe Size	Inner Flexible wall (wetted)
R = Wafer (mounts between two existing flanges) B = Bolt - thru (with complete flange)	CS = Carbon Steel SS = 316SS	1 = Carbon Steel 2 = 316SS 3 = Carbon Steel with Teflon envelope 4 = 316SS with Teflon envelope 5 = CPVC	N = Without IRD** D = With IRD** **IRD: Instrument Removal Device - Permits easy removal of instrumentation for calibration, repair, or replacement without the need to shut down process flow	010 = 1" 080 = 8" 015 = 1.5" 100 = 10" 020 = 2" 120 = 12" 025 = 2.5" 140 = 14" 030 = 3" 160 = 16" 040 = 4" 180 = 18" 050 = 5" 200 = 20" 060 = 6"	1 = Buna-N (up to 225° F) 2 = Viton (up to 350° F) 3 = Teflon (up to 350° F) 4 = Silicone (up to 450° F) 5 = White Neoprene (up to 225° F) 6 = Natural rubber (up to 225° F)

DIAPHRAGM SEAL ACCESSORIES

Flushing Ring

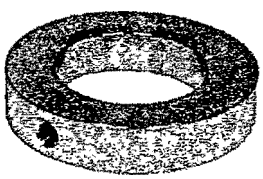

DXFR — 1.5 — 41 — S

1.5 = 1 1/2" 2 = 2" 3 = 3" 4 = 4"	41 = 1/4" NPTF (one port) 42 = 1/4" NPTF (two ports) 21 = 1/2" NPTF (one port) 22 = 1/2" NPTF (two ports)	S = 316SS F = 304SS H = Hast C M = Monel

Stainless Capillary (2.0mm i.d.)

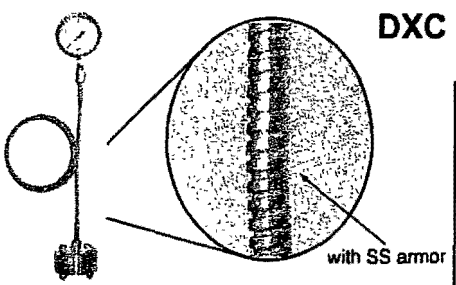

DXC — 4F — 4M — 05 — A

Instrument Fitting	Seal Fitting	Length	Protection
4M = 1/4" NPTM 4F = 1/4" NPTF 2M = 1/2" NPTM 2F = 1/2" NPTF W = weld fitting (10mm dia.)	4M = 1/4" NPTM 4F = 1/4" NPTF 2M = 1/2" NPTM 2F = 1/2" NPTF W = weld fitting (10mm dia.)	05 = 5ft. 06 = 6ft. 10 = 10ft. etc.	A = SS Armor B = bare

REOTEMP INSTRUMENTS
Telephone: (800) 648-7737 FAX (858) 784-0720 • sales@reotemp.com • www.reotemp.com

MINI SEALS

MINI-SEALS are all-welded, gasketless, threaded off-line seals. The mini-seal is an economical choice for isolation of smaller gauges, or where high sensitivity is not required.

MINI SEAL

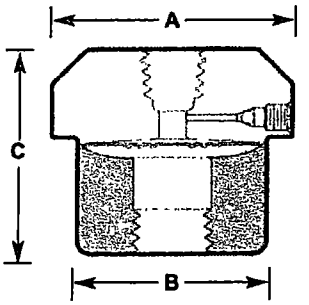

	A	B	C	Min. Range
4G	1.73"	1.5"	1.5"	0-100 psi
6G	2.25"	1.95"	1.6"	0-15 psi
4H	2.0"	1.75"	1.6"	0-100 psi

HOW TO ORDER:

Size: 4G - Low volume, for up to 3 1/2" gauge. Max 2000 psi @ 100° F
6G - Std. volume with larger diaphragm, for up to 4 1/2" gauge. Max 1,000 psi
4H - High Pressure, for up to 3 1/2" gauge. Max 5,000 psi @ 100° F

Instrument Connection (Female NPT):
4 = 1/4" NPT
2 = 1/2" NPT

Process Connection (Female NPT):
4 - 1/4" NPT 4M = 1/4" NPT Male
2 - 1/2" NPT 2M = 1/2" NPT Male

Material:
S = 316 Stainless (Standard)
H = Hastelloy C
F = 304 Stainless

Options:
F = Flushing Connection

MS- 4 G 4 4 S

SANITARY IN-LINE PRESSURE SEALS

3-A

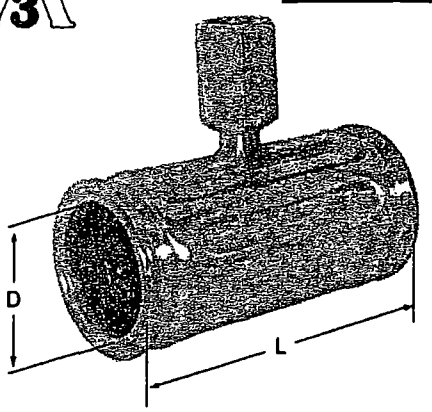

REO*TEMP* IN-LINE SEALS are the solution to many difficult pressure measurement applications. These seals are designed to 3-A standards, and allow unobstructed flow-through of process media.

TO ORDER: Tri-Clamp type, 1/4" NPT conn., 316SS

Pipe Size (D)	Tri-Clamp Conn.	Part Number	L (length)
1/2"	1/2"	ILS-TC05	7.87"
3/4"	3/4"	ILS-TC75	4.33"
1"	1"	ILS-TC10	4.33"
1 1/2"	1.5"	ILS-TC15	4.33"
2"	2"	ILS-TC20	4.33"
3"	3"	ILS-TC25	2.36"

Specifications:

Pipe material:	316LSS
Diaphragm Material:	316LSS standard (other material available on request)
Instrument Connections:	1/4" NPT std., (1/2" NPT, BSP threads cooling element or capillary line available)
Pipe connections:	Tri-clamp, (ANSI Flange (or metric connection types avail. - consult factory)
Pressure Limits:	600 psi (other styles to 6,000 psi)
Pipe sizes:	1/2" to 4"
Filling Fluids:	Glycerin, vegetable oil or any food - compatible fluid
Leak checking:	All seals are helium leak tested

OTHER DIAPHRAGM SEALS

REO*TEMP* provides many special-use or custom diaphragm seals.
Consult factory for specific application assistance.

SADDLE

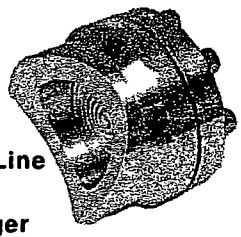

- Welded In-Line Flow-Thru
- 3" and Larger Process Pipe Sizes
- 2.4" Diaphragm

SANITARY SEAL

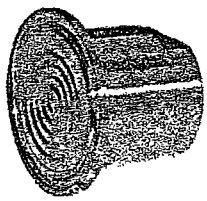

- 3-A Sanitary Seal
- Tri-Clamp sizes 1 1/2", 2", 3", 4"

CHERRY BURELL "I" Line

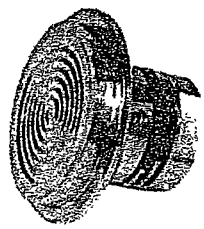

- Sanitary Seal
- 1.5", 2.0", 3.0" Sizes

CPM FITTING SEAL

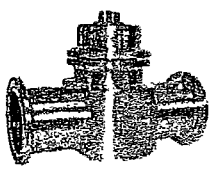

- Eliminates/ Reduces Process "Dead-Leg"
- Available in Triclamp or Auto-Weld Styles
- 316LSS ID-15RA, EP Finish

Tree Seal Assembly

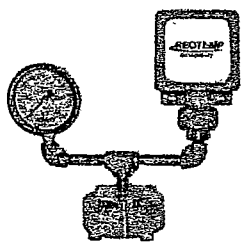

- "Tree" mounting of multiple instruments on one seal

IN-LINE FLOW THRU

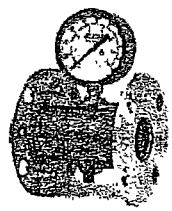

- Unobstructed Flow of Process media
- No Recesses or Constrictions
- "ANSI" Flange Connections

BUTTON SEAL

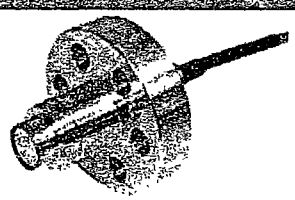

- For High Pressures
- 0.9" Dia. Diaphragm
- Connections: Homogenizer, Flanged, Threaded

SANITARY TANK SPUD

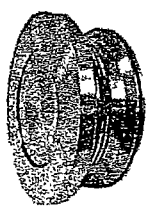

- 2.0" & 6.0" Extensions
- Weld Spud Available

WEDGE TYPE SEAL

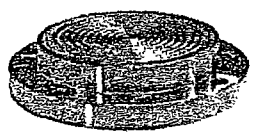

- Flow Meter Seal
- Wedge Type Connection

DIAPHRAGM SEAL OPTIONS AVAILABLE

- Calibration Rings for Flanged Seals
- Gold Plated Diaphragms
- Low Volume Nipples
- Capillary

REOTEMP INSTRUMENTS
Telephone: (800) 648-7737 FAX (858) 784-0720 • sales@reotemp.com • www.reotemp.com

PRESSURE TRANSMITTERS

TRANS P LINE

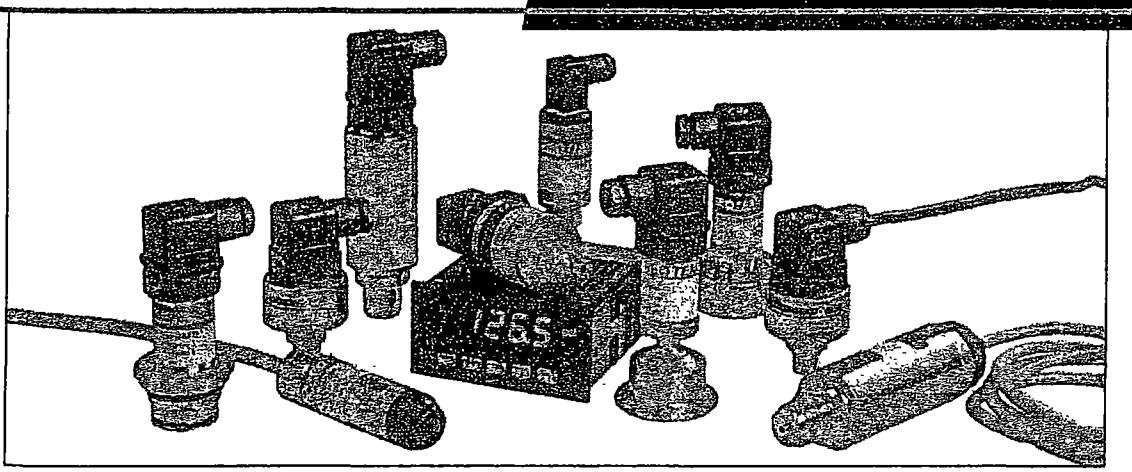

REO*TEMP* TRANS-P LINE **Pressure Transmitters and Transducers** * all convert applied pressure to an electrical signal that can be interpreted by a computer or other interpretive device, where it can be used to display or control a process variable.

Output: Reotemp transmitters produce either a 4-20 mA signal (the most common output), or a variety of voltage outputs, such as 1-5 VDC and 0-10 VDC (3 wire).

Sensors: Piezoresistive diffused semiconductor technology is standard for pressures up to 300 psi. For higher pressures (up to 60,000 psi), sputtered thin film technology is used. These sensors are exceptionally stable, shock resistant, and durable. Our piezoresistive and thin-film sensors are made with no epoxies or bonding agents, virtually eliminating signal instability or drift.

Unit Integrity: Sensor durability, along with mechanical integrity of the stainless case and all-welded process connection, produce a rugged instrument designed to provide consistent performance under severe industrial conditions.

Accuracy: Accuracies from 0.5% to 0.025% are available. Each unit is temperature compensated to provide stable accuracy over large ambient variations and long periods of time.

Ready to Go: Whether shipped alone or with a Digital Indicator, each Reotemp transmitter is inspected and calibrated prior to shipment to assure it is 100% "Ready to Go" right out of the box!

Large Transmitter Stock: Reotemp stocks many transmitter models in a large variety of ranges, mainly with 4-20 mA output, because of their popularity. See the range table on page 39 for indication of our in-stock offering.

**Transmitter or Transducer?* "Transmitter" is often used when referring to a pressure sensor with variable current (mA) output, whereas "Transducer" usually implies voltage output. For simplicity, we use the term "transmitter" for all sensors offered in this catalog.

Trademarks: These non-Reotemp trademarks are used in this catalog, and are the property of their respective owners: Teflon®, Iso-ring®, Tri-Clamp®, In-line Seal®, Hastelloy®, Neobee®, Hirschmann®.

WARRANTY

REO*TEMP* Instrument Corp. warrants all TRANS-P line transmitters against defective workmanship or materials under normal use and service for three years following date of shipment (for transmitters) and one year (for series DM indicators.) Reotemp's liability is limited to repair or replacement at the factory, shipping charges prepaid.

This warranty does not cover deterioration from normal wear and tear, chemical or environmental corrosion, exposure to temperatures, pressures or vibration beyond those recommended, or forces or abrasion which cause deformation of component parts.

This warranty is expressly in lieu of any other warranty, expressed or implied. Reotemp shall not be liable for any direct or consequential damages arising out of any defects or from any cause whatsoever.

All product designs and specifications are subject to change without notice.

SELECTING A TRANSMITTER

Consider the following issues to help you to choose the best pressure transmitter for your application:

1. Special Needs: Series **TG** (general purpose transmitter) is a good choice for general industrial applications. For special needs or circumstances, other models will be more suitable:
   High Accuracy: Choose series **TH** for up to 0.1% accuracy (BFSL). For reference, the standard TG accuracy is 0.5%.)
   Hazardous Environments: Consider series **TX** (intrinsically safe) or series **TE** (Explosion proof transmitters.)
   Total Submersion: Choose series **TS.**
   Clogging Media: Consider series **TG** mounted to a diaphragm seal, or series **THF,** which comes with flush diaphragm.
   Sanitary Applications: Choose series **THS,** which comes with sanitary Tri-clamp connection.
   Low Cost: For OEM use, or for applications where low cost is a necessity, consider series **TM.**
   Local Indication: Consider **DM3** digital meter, or **XTDM-1** piggy-back display.

2. Pressure Range: Choose a range that places your working pressure at 50% to 90% of the transmitter pressure range. Pressure spikes up to proof pressure will not harm the transmitter but may affect calibration; pressures beyond burst pressure will cause damage.

3. Accuracy: Series **TG,** with 0.5% BFSL accuracy, and with 0.05% repeatability, suits many industrial applications. Higher accuracies (0.25% and 0.1%) are available, generally at higher cost.
   **BFSL (Best Fit Straight Line) expresses maximum deviation from a straight line positioned to minimize maximum deviation.*

4. Output: Current output (4 mA to 20 mA) is the most popular for industrial use because it is less susceptible to electrical noise and can be transmitted through copper wires up to thousands of feet with little signal loss. Several voltage outputs are also available, and are suitable for shorter distances. Typical voltage outputs include 0-5 VDC, 1-5 VDC, and 0-10 VDC.

5. Process Connection: 1/4" NPT and 1/2" NPT are the most common connections in industrial process applications. In hydraulic applications, 7/16-20 UNF SAE male with o-ring seal is commonly used. For sanitary applications, Tri-Clamp connections on the **THS** series are available in several sizes, with 1 1/2" triclamp the most common. Other process connections, such as G1/2, G1, and 1/4"NPT female are available as well.

6. Electrical Connection: All Trans-P series transmitters require wire hookup for both power and output. 4-20 mA output uses 2 wires, which carry both loop power and output signal (loop current). Voltage output usually uses three wires, with 4 wires available. The standard Hirschmann connector (Din 43650) in standard or mini size allows easy connection to 2, 3, or 4 wires, with internal screw terminals and cable gland. Also available are integral cable (with or without 1/2"NPT male conduit threads), bendix 4- and 6-pin, and M12 types, as well as a Hirschmann with 1/2"NPT female conduit connection.

7. Severe Conditions: Reotemp Trans-P transmitters are rugged instruments intended for industrial use. However, temperatures, corrosion, vibration, or pulsation beyond operational limits should be addressed to prolong the life of the instrument:
   High process temperatures: Temperature at the instrument can be lowered by using a dead-leg extension. Using 1/4" stainless tubing, each 2 inches of extension will lower the process temperature about 100F. For high temperature with clogging media, a diaphragm seal with capillary can be used.
   High Ambient temperatures: The instrument can be removed from the hot zone using piping, tubing, or capillary with a diaphragm seal.
   Corrosive media: A chemically compatible diaphragm seal can isolate the transmitter from the corrosive media.
   Pulsation: Pressure fluctuations in an incompressible fluid can cause damaging pulsation (such as water hammer). This is a common cause of failure in pressure transducers, and measures should be taken to avoid this condition. Use of a snubber or restrictor screw (threaded orifice) should be considered.

REOTEMP INSTRUMENTS
Telephone: (800) 648-7737 FAX (858) 784-0720 · sales@reotemp.com · www.reotemp.com

General Purpose Transmitters

Series TG

- 0.5% or 0.25% accuracy, for general industrial use
- All-stainless welded body and wetted parts
- 4-20 mA or Voltage Output
- Rugged, with protection from shock, over-range, & over-voltage. Internals potted in silicone gel.
- Internal zero & span adjustments
- Compatible with Reotemp DM series Digital Indicators
- 100% inspected, "Ready-to-go" out of the box

TG series transmitters are compatible with Reotemp DM series digital indicators (p.37). Each Reotemp transmitter is inspected and calibrated prior to shipment, to ensure it is 100% "Ready-to-Go" right out of the box!

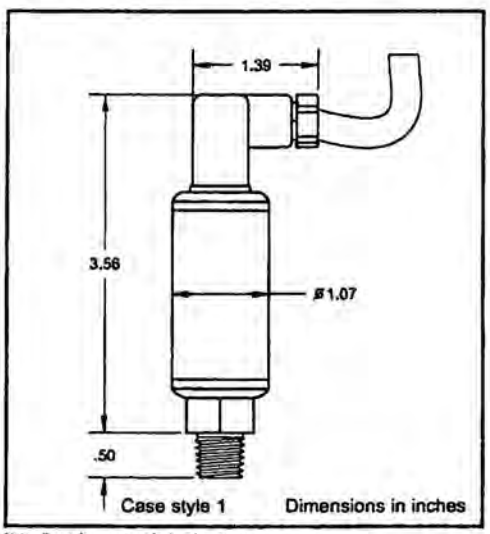

Note: dimensions are nominal and may vary.
Check with Reotemp sales if dimensions are critical.

Specifications: (Also see General specs, page 39)

Output Signal:	4-20 mA, 2 wire (std) 0-5 V, 0-10 V, 1-6 V, or 1-11 VDC (3 wire)
Pressure Ranges:	Vacuum, compound, pressure to 15000PSI; gauge and absolute

Proof and Burst Pressures	Proof pressure	Burst pressure
0/5 thru 0/200psi	3 x range	3.8 x range
0/300 thru 0/10,000 psi	1.75 x range	4 x range
0/15,000 psi	1.5 x range	3 x range

Accuracy (BFSL): (incl. repeatability, hysteresis, and linearity):	+/- 0.5% of span (standard) +/- 0.25% of span (optional)
Adjustment:	+/- 10% full scale, zero & span
Input:	12-30 VDC (for current output) 14-30 VDC (for voltage output)
Temperature:	Compensated: +32 to 175 deg F Effect: +/- 0.02% of span / deg F Media: -22 to 212°F (-30/100C) Ambient: -40 to 185°F (-40 to 85°C)
Weight:	Approx. 3.5 oz (90g)

How to Order

TG — [1] — [P20] — [1] — [A] — [4] — [A]

TG1 =	Range:	Accuracy:	Output Signal:	Process Connection:	Electrical Connection:	Options:
General Purpose Transmitter (Case style 1)*	SEE PAGE 39 FOR RANGE CODES Vacuum, Compound, Pressure 0/5psi to 0/15,000psi	1 = +/-0.5% Full Scale (std) 2 = +/-0.25% Full Scale	A = 4-20mA, (2 wire) (std) B = 0-5 VDC, 3 wire C = 1-5 VDC, 3 wire D = 1-6 VDC, 3 wire E = 0-10 VDC, 3 wire F = 1-11 VDC, 3 wire	4 = 1/4" NPT (Male) 7 = 7/16-20UNF Male (SAE J-514) 8 = 1/8" NPT (Male)	A = Mini-Hirschmann (w/36" cable) B = Mini-Hirschmann (no cable) E = 4 pin Bendix* F = 6 pin Bendix* J = 1/2" NPT Conduit (w/36" cable)	1 = Threaded Orifice (SS, M3.5) 2 = Restrictor Screw S = Snubber (Diaphragm Seals available)

*Note: All dimensions and specs. are for case style 1. Other case styles available.

*Mating Connector sold separately

SERIES TH

HEAVY DUTY, HIGH ACCURACY TRANSMITTERS

- Heavy-duty, 0.25% or 0.12% accuracy
- All-stainless welded Body and Wetted Parts
- Very low to very high Pressure Ranges
- Engineered for high stability, shock resistance, and durability - (internal electronics potted in silicone gel.)
- Internal zero & span adjustments
- 4-20 mA, or choice of several voltage outputs

CE

TH series transmitters are compatible with Reotemp DM series digital indicators (p.37). Each Reotemp transmitter is inspected and calibrated prior to shipment, to ensure it is 100% "Ready-to-Go" right out of the box!

[redacted]

Specifications: **(Also see General specs, page 39)**

Output Signal: 4-20 mA, 2 wire (std)
0-5 VDC, or 1-10 VDC (3 wire)

Pressure Ranges: Vacuum, compound, pressure to 60,000 PSI; gauge and absolute

Proof & Burst Pressures	Proof pressure	Burst pressure
0/5 thru 0/200psi	3 x range	3.8 x range
0/300 thru 0/10,000 psi	1.75 x range	4 x range
0/15,000 psi	1.5 x range	3 x range
0/20,000 thru 0/120,000 psi	1.2 x range	1.5 x range

Accuracy (BFSL): +/- 0.25% of span (standard)
(incl. repeatability, hysteresis, and linearity): +/- 0.11% of span (optional)

Adjustment: +/- 10% full scale, zero & span

Input: 10-30 VDC (for current output)
14-30 VDC (for voltage output)

Temperature: Compensated: +32 to 175°F (0/80°C)
Effect: +/- 0.01% of span / deg F (on zero and span)
Media: -20 to 212°F (-30/100°C)
Ambient: -15 to 175°F (-10 to 80°C)

Weight: Approx. 7.2 oz (187g)

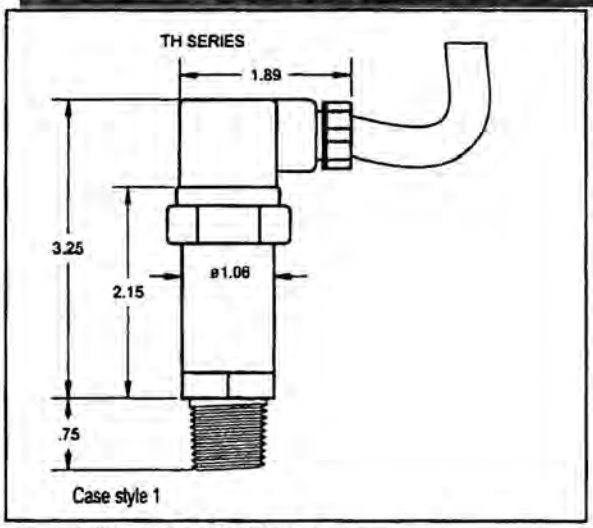

Case style 1

Note: dimensions are nominal and may vary
Check with Reotemp sales if dimensions are critical.

HOW TO ORDER

TH — [1] — [P20] — [2] — [A] — [4] — [C]

TH1 = High-Accuracy Transmitter (case style 1)*	Range:	Accuracy:	Output Signal:	Process Connection TH1:	Electrical Connection:	Options:
	SEE PAGE 39 FOR RANGE CODES Vacuum, Compound, Pressure: 0/55INWC...to 60,000psi (TH1) 0/55INWC...to 7,500psi (THF)	2 = +/-0.25% Full Scale (std) 3 = +/-0.12% Full Scale	A = 4-20mA, 2 wire (std) B = 0-5 VDC, 3 wire C = 1-5 VDC, 3 wire E = 0-10 VDC, 3 wire	2 = 1/2" NPT(std) 4 = 1/4" NPT 9 = 9/16-18 aminco** (std on 30,000 to 60,000 psi)	C = Hirschmann (w/36" cable) D = Hirschmann (DIN 43650) F = 6 pin Bendix† J = 1/2" NPT conduit (w/36" cable) N = 1/2" NPTF ISO 4400 flex conduit conn.	1 = Threaded Orifice (SS, M3.5) 2 = Restrictor Screw Weld-in adapters for G1, G1/2 Diaphragm Seals, Snubbers

*Note: All dimensions and specs. are for case style 1. Other case styles available. **Also known as Autoclave F250C. †Mating Connector sold seperately

REOTEMP INSTRUMENTS
Telephone: (800) 648-7737 FAX (858) 784-0720 · sales@reotemp.com · www.reotemp.com

INTRINSICALLY SAFE TRANSMITTERS

SERIES TX

- Intrinsically safe for Hazardous Environments
- Heavy-duty, 0.25% or 0.1% accuracy
- Very low to very high Pressure Ranges
- Internal zero & span adjustments
- All-stainless welded Body and Wetted Parts
- Shock-proof - internals potted in epoxy

Applications:
Petrochemicals, chemicals, and other hazardous applications requiring Class I, Division I protection.

TX series transmitters are compatible with Reotemp DM series digital indicators (p.37). Each Reotemp transmitter is inspected and calibrated prior to shipment, to ensure it is 100% "Ready-to-Go" right out of the box!

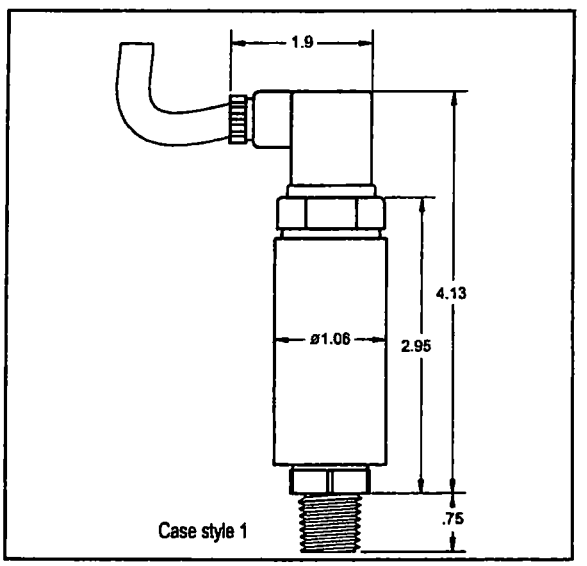

Note: dimensions are nominal and may vary.
Check with Reotemp sales if dimensions are critical.

Specifications: **(Also see General specs, page 39)**

Approvals:	FM, CSA, CENELEC, BASEEFA, and PTB approved for Class I, II, III; Division 1, groups A, B, C, D, E, F, G. Nonincendive for Class I, Div 2, Groups A, B, C, D.
Output Signal:	4-20 mA, 2 wire
Pressure Ranges:	Vacuum, compound, pressure to 15000PSI; gauge and absolute

Proof & Burst Pressures	Proof pressure	Burst pressure
0/5 thru 0/200psi	3.5 x range	3.5 x range
0/300 thru 0/10,000 psi	2 x range	2 x range
0/15,000 psi	1.5 x range	2 x range
0/25,000 and 0/60,000 psi	1.2 x range	2 x range

Accuracy (BFSL):	+/- 0.25% of span (standard) +/- 0.12% of span (optional) (incl. repeatability, hysteresis, and linearity)
Adjustment:	+/- 10% full scale, zero & span
Input:	10-30 VDC
Temperature:	Compensated: +32 to 175°F (0/80C) Effect: +/- 0.01% of span / deg F (on zero and span) Media: -5 to 120°F (-20/50°C) Ambient: -5 to 120°F (-20/50°C)

HOW TO ORDER

TX — [1] — [P20] — [2] — [A] — [4] — [C] — [2]

TX1 =	Range:	Accuracy:	Output Signal:	Process Connection	Electrical Connection:	Options:
Intrinsically Safe transmitter-(case style 1)*	SEE PAGE 39 FOR RANGE CODES Vacuum, Compound, Pressure 0/55INWC...to 30,000psi (TX1) 0/55INWC...to 7,500psi (TXF)	2 = +/-0.25% Full Scale (std) 3 = +/-0.12% Full Scale	A = 4-20mA, 2 wire	TX1: 4 = 1/4" NPT 2 = 1/2" NPT(std)	C = Hirschmann (w/36" cable) D = Hirschmann (DIN 43650) N = 1/2" NPTF ISO 4400 flex conduit conn.	1 = Threaded Orifice (SS, M3.5) 2 = Restrictor Screw Weld-in adapters for G1, G1/2 Diaphragm Seals, Snubbers

*Note: All dimensions and specs. are for case style 1. Other case styles available.

SERIES TS

SUBMERSIBLE, LIQUID-LEVEL TRANSMITTERS

- Accurate Level Measurements from 5" WC to 300 psi
- 316 Stainless Steel and Polyurethane wetted parts
- 0.25% or 0.1% accuracy
- Vented, Strong Submersible Cable
- Lightning, short circuit, reverse polarity protection
- NEMA 6/IP68 protection, submersible to 1000 ft.

TS series transmitters are compatible with Reotemp DM series digital indicators (p.37). Each Reotemp transmitter is inspected and calibrated prior to shipment, to ensure it is 100% "Ready-to-Go" right out of the box!

Specifications: (Also see General specs, page 39)

Output Signal:	4-20 mA, 2 wire 0-5 VDC, 0-10 VDC, or 0.5-2.5 VDC (3 wire)
Pressure Ranges:	0-2PSI thru 0-500PSI
Proof Pressure:	2 x range
Burst Pressure:	4 x range
Accuracy (BFSL):	+/- 0.25% of span (standard)
(incl. repeatability, hysteresis, and linearity):	+/- 0.125% of span (optional)
Input:	12-30 VDC (for current output) 14-30 VDC (for VDC output) 6 VDC (for 0.5 to 2.5VDC output)
Temperature:	Compensated: +32 to 122°F (0/50°C) Effect: +/- 0.01% of span / deg F (on zero and span) Media: -14 to 175°F (-10/80C)

Environmental Protection: NEMA 6, IP68 (submersible to 1,000 ft.)
Electrical Protection: Reverse polarity, short circuit, and lightning protection.
Submersible Cable: Vented, watertight, polyurethane jacketed.
Tensile strength: maximum 220 pounds
Wetted Parts: Body – 316 stainless
Cable – polyurethane (teflon available)
Nose cone – Polyamide

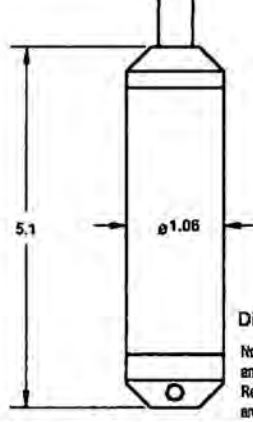

Dimensions in inches

Note: dimensions are nominal and may vary. Check with Reotemp sales if dimensions are critical.

HOW TO ORDER

TS — [1] — [P20] — [2] — [A] — [N] — [S] — [50]

TS1 =	Range:	Accuracy:	Output Signal:	Process Connection:	Electrical Connection:	Cable Length:
Submersible Liquid Level Transmitter (case style 1)*	See p. 39 for std. Range codes thru 0-500psi. Special INWC ranges for TS1: IN50 =0/50 IN100 =0/100 IN150 =0/150 IN200 =0/200 IN400 =0/400	2 = +/-0.25% Full Scale (std) 3 = +/-0.125% Full Scale (optional)	A = 4-20mA, (2 wire) (Std) B = 0-5 VDC, 3 wire E = 0-10 VDC, 3 wire H = 0.5-2.5 VDC, 3 wire	N = Nose Cone (std) W = Nose Cone w/added weight	S = Submersible cable	Specify length in feet

*Note. All dimensions and specs. are for case style 1. Other case styles available.

REOTEMP INSTRUMENTS
Telephone: (800) 648-7737 FAX (858) 784-0720 • sales@reotemp.com • www.reotemp.com

OEM TRANSMITTERS

SERIES TM

- Reliable, Economical, 0.5% accuracy
- Shock Resistant, High over-range Protection
- 4-20 mA or voltage output
- All-stainless Body and Wetted Parts

Applications:
Hydraulics, refrigeration, robotics, machine controls, industrial or OEM applications where performance, reliability, and value are needed

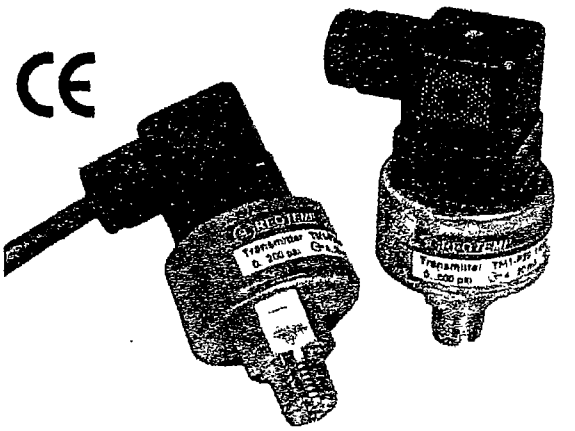

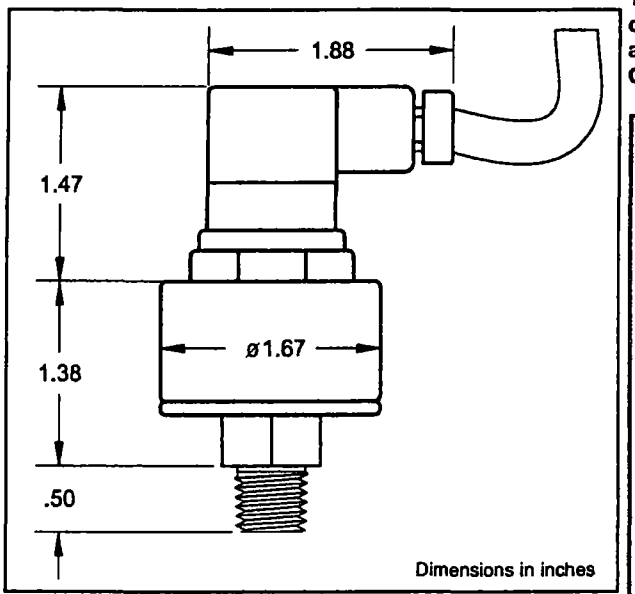

Dimensions in inches

Note: dimensions are nominal and may vary.
Check with Reotemp sales if dimensions are critical.

TM series transmitters are compatible with Reotemp DM series digital indicators (p.37). Each Reotemp transmitter is inspected and calibrated prior to shipment, to ensure it is 100% "Ready-to-Go" right out of the box!

Specifications: (Also see General specs, page 39)

Output Signal: 4-20 mA, 2 wire (std)
0-10 VDC (3 wire)
Pressure Ranges: Vacuum, compound, pressure to 15,000PSI

Proof & Burst Pressures	Proof pressure	Burst pressure
0/5 thru 0/200psi	3 x range	3.8 x range
0/300 thru 0/10,000 psi	1.75 x range	2.6 x range
0/15,000 psi	1.5 x range	3 x range

Accuracy (BFSL):
(incl. repeatability,
hysteresis, and linearity): +/- 0.5% of span
Input: 10-30 VDC (for current output)
14-30 VDC (for voltage output)
Temperature: Compensated: +32 to 175 deg F
Effect: +/- 0.02% of span / deg F (on zero and span)
Media: -22 to 212°F (-30/100°C)
Ambient: -22 to 175°F (-30/80°C)
Certifications: CE

HOW TO ORDER

TM — [1] — [P20] — [1] — [A] — [4] — [C] — [1]

TM1 =	Range:	Accuracy:	Output Signal:	Process Connection:	Electrical Connection:	Options:
Heavy Duty OEM Transmitter (case style 1)*	SEE PAGE 39 FOR RANGE CODES Pressure 0/5psi to 0/15,000psi	1 = +/-0.5% Full Scale	A = 4-20mA, (2 wire) (Std) C = 1-5 VDC, 3 wire D = 1-6 VDC, 3 wire E = 0-10 VDC, 3 wire	4 = 1/4" NPT (std) 8 = 1/8" NPT male	C = Hirschmann (w/36" cable) D = Hirschmann (DIN 43650) N = 1/2" NPTF ISO 4400 flex conduit conn.	1 = Threaded Orifice (SS, M3.5) 2 = Restrictor Screw Diaphram Seals, Snubbers

*Note. All dimensions and specs. are for case style 1. Other case styles available.

SERIES THS

3A SANITARY TRANSMITTERS

- 3A, Tri-clamp Sanitary Connection
- 316 Stainless Wetted Parts
- Designed for "Clean-in-place" and "Sterilize-in-place" procedures
- Media temperatures to 250F (121C)
- Internal zero & span adjustments

Applications:
Food, dairy, pharmaceutical, beverage, biotech.

THS series transmitters are compatible with Reotemp DM series digital indicators (p.37). Each Reotemp transmitter is inspected and calibrated prior to shipment, to ensure it is 100% "Ready-to-Go" right out of the box!

Specifications: (Also see General specs, page 39)

Output Signal: 4-20 mA, 2 wire (std)
1-5 VDC, 1-6 VDC, or 1-11 VDC (3 wire)

Pressure Ranges: Vacuum, compound, pressure 0/2 to 0/1000 PSI gauge and absolute. Ranges 60psi and below not recommended with 3/4" tri-clamp.

Proof & Burst Pressures	Proof pressure	Burst pressure
0/5 thru 0/200psi	3 x range	3.8 x range
0/300 thru 0/1,000psi	1.75 x range	4 x range

Accuracy (BFSL): +/- 0.5% of span (standard)
+/- 0.25% of span (optional)

Adjustment: +/- 5% full scale, zero & span

Input: 10-30 VDC (for current output)
14-30 VDC (for voltage output)

Temperature: Temperature effect with 1.5" or 2" triclamp:
+/- 0.1% of span / 10°F (for zero & span)
or +/- 0.02psi/ 10°F (greater of)
Note: 3/4" Triclamp not recommended for temperature variations. Effect is < = +/- 0.9psi/ 10°F

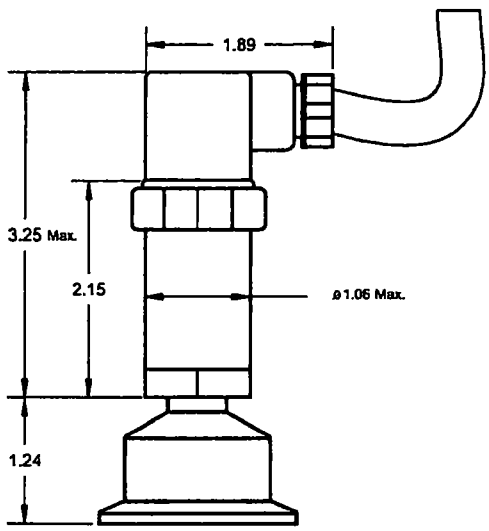

Dimensions in inches

Note: dimensions are nominal and may vary.
Check with Reotemp sales if dimensions are critical.

HOW TO ORDER

THS — P20 — 1 — A — C — C — G

THS =	Range:	Accuracy:	Output Signal:	Process Connection:	Electrical Connection:	Fill Fluid:
Sanitary Transmitter	SEE PAGE 39 FOR RANGE CODES Vacuum, Compound, Pressure RANGES: 0/5psi to 0/1,000psi	1 = +/-0.5% Full Scale 2 = +/-0.25% Full Scale	A = 4-20mA, (2 wire) (Std) C = 1-5 VDC, 3 wire D = 1-6 VDC, 3 wire F = 1-11 VDC, 3 wire	C = 1.5" Triclamp L = 2" Triclamp A = 2.5" Triclamp CI = 2" Cherry-Burrell "I"-line M*= 3/4" Triclamp (other connections available)	A*= Mini Hirschmann (w/36" cable) B*= Mini Hirschmann (no cable) C**= Hirschmann (w/36" cable) D**= Hirschmann (no cable) F = 6 pin Bendix J = 1/2" NPT male conduit (w/36" cable) * Used for all .5% acc. except <5 psi ** Used for all .25 acc. and all <5 psi	G = Glycerin (std) S = Silicone N = Neobee M-20 H = Halogenated inert fluid V = Vegetable oil

*Note: REOTEMP recommends 1.5" or 2" triclamp for variable temperature service.

REOTEMP INSTRUMENTS
Telephone: (800) 648-7737 FAX (858) 784-0720 • sales@reotemp.com • www.reotemp.com

General Specifications

For Reotemp Pressure Transmitters shown on pp 31-38. (See specific specs on each product page.)

Wetted Parts: **316SS (ranges under 400 psi). Hi press. Ranges, 17-4 PH SS diaphragm and 300 series SS pressure chamber**

Repeatability: **0.05% of scale (model TM, 0.2%)**

Hysteresis: **0.1% full scale**

Stability: **0.2% full-scale (model TM, 0.5%)**

Response time: **< 1 ms (between 10-90% of scale). [Model TM, <5 ms]**

Operating Life: **100 million cycles**

Electromagnetic rating: **CE compliant to EMC norm EN61326:1997/A1: 1998 RFI, EMI and ESD protection**

Electrical Protection: **Reverse Polarity, over voltage, and short circuit protection**

Shock: **Less than +/- 0.05% full scale effect for 1000 g's @ 2ms on any axis (model TM: 600 g's)**

Vibration: **Less than +/- 0.01% full scale effect for 15 g's @ 0-2000 Hz on any axis (Model TG: less than 0.05% full scale effect for 20 g's @ 5-2000 Hz on any axis.)**

Temperature Range for Storage: **-40 to 212 degrees F (series 612, -22 to 175 degrees F).**

Environmental protection: **NEMA 4x (DIN IP65) (series TS, NEMA 6, IP68)**

Electromagnetic ratings: **CE compliant to EMC norm EN61326: 1997/A1:1998. RFI, EMI, and ESD protection.**

Proof Pressure and Burst Pressure **can be found for individual models on product pages.**

At Proof Pressure, zero and span may shift but no permanent damage has occurred.

At Burst Pressure, permanent, non-recoverable damage may occur.

Note: Specifications are subject to change.

	TYPE	TG1				TH1	TX1	TE	TS	THS	TM	
Code	Range	General Purpose				Hi-Acc	I.S.	Expl. Prf.	Sub-mersible	Sanitary	OEM	
Output signal		4-20mA	0-5V	0-10V	1-11V	4-20mA	4-20mA	4-20mA	4-20mA	4-20mA	4-20mA	0-10VDC
Std. Process Connection		1/4NPT	1/4NPT			1/2NPT	1/2NPT	1/2NPT	Nose	Triclamp	1/4"NPT	
Vacuum												
P01	-30"Hg VAC	Y	Y	Y	Y	Y	Y	Y		Y	Y	Y
Compound Ranges												
P02	-30"Hg/0/15psi	Y	Y	Y	Y	Y	Y			Y		
P03	-30/0/30 psi	Y	Y	Y	Y	Y	Y	Y		Y		
P04	-30/0/60 psi	Y	Y	Y	Y	Y	Y	Y		Y		
P05	-30/0/100psi	Y	Y	Y	Y	Y	Y	Y		Y		
P06	-30/0/150psi	Y	Y	Y	Y	Y	Y			Y		
P07	-30/0/200psi	Y	Y	Y	Y	Y	Y	Y		Y		
P08	-30/0/300psi	Y	Y	Y	Y	Y	Y			Y		
Pressure Ranges												
L11	0-55 INWC					Y	Y		See page 34 for ranges	Y		
L12	0-80 INWC					Y	Y			Y		
L13	0-140 INWC	Y				Y	Y			Y		
L14	0-280 INWC	Y				Y				Y		
P11	0-2 psi					Y	Y		Y	Y		
P12	0-3 psi					Y	Y		Y	Y		
P13	0-5 psi	Y	Y	Y	Y	Y	Y		Y	Y		
P14	0/10 psi	Y	Y	Y	Y	Y			Y	Y		
P15	0/15 psi	Y	Y	Y	Y	Y	Y	Y	Y	Y	Y	Y
P16	0/30/ psi	Y	Y	Y	Y	Y	Y	Y	Y	Y	Y	Y
P17	0/60 psi	Y	Y	Y	Y	Y	Y	Y	Y	Y	Y	Y
P18	0/100 psi	Y	Y	Y	Y	Y	Y	Y	Y	Y	Y	Y
P19	0/150 psi	Y	Y	Y	Y	Y	Y		Y	Y	Y	Y
P20	0/200 psi	Y	Y	Y	Y	Y	Y	Y	Y	Y	Y	Y
P21	0/300 psi	Y	Y	Y	Y	Y	Y	Y	Y	Y	Y	Y
P26	0/500 psi	Y	Y	Y	Y	Y	Y	Y	Y	Y	Y	Y
P23	0/600 psi	Y	Y	Y	Y	Y	Y			Y	Y	Y
P27	0/750 psi	Y	Y	Y	Y	Y	Y			Y	Y	Y
P25	0/1000 psi	Y	Y	Y	Y	Y	Y	Y			Y	Y
P30	0/1500 psi	Y	Y	Y	Y	Y	Y	Y			Y	Y
P31	0/2000 psi	Y	Y	Y	Y	Y	Y	Y			Y	Y
P32	0/3000 psi	Y	Y	Y	Y	Y	Y	Y			Y	Y
P33	0/4000 psi					Y						
P34	0/5000 psi	Y	Y	Y	Y	Y	Y	Y				Y
P35	0/6000 psi	Y	Y	Y	Y	Y	Y				Y	Y
P28	0/7500psi	Y	Y	Y	Y	Y	Y				Y	Y
P37	0/10000 psi	Y	Y	Y	Y	Y	Y	Y			Y	Y
P38	0/15000 psi	Y	Y	Y	Y	Y	Y				Y	Y
P39	0/20000 psi					Y						
P40	0/30000 psi					Y						
P41	0/40000 psi					Y						
P42	0/50000 psi					Y						
P43	0/60000psi					Y						
Absolute Pressure Ranges												
A15	0/15 psia	Y	Y	Y	Y	Y	Y	Y		Y	Y	Y
A16	0/30/ psia	Y	Y	Y	Y	Y	Y			Y	Y	Y
A17	0/60 psia	Y	Y	Y	Y	Y	Y			Y	Y	Y
A18	0/100 psia	Y	Y	Y	Y	Y	Y	Y		Y	Y	Y
A19	0/150 psia	Y	Y	Y	Y	Y	Y			Y	Y	Y
A20	0/200 psia	Y	Y	Y	Y	Y	Y			Y		
A21	0/300 psia	Y	Y	Y	Y	Y	Y			Y		

Standard, in-stock ranges (for 4-20ma) are shaded (Subject to availability - May be changed without notice)

Y = Available Y =normally in stock

Wiring Diagrams

(for transmitter p.p. 31-38)

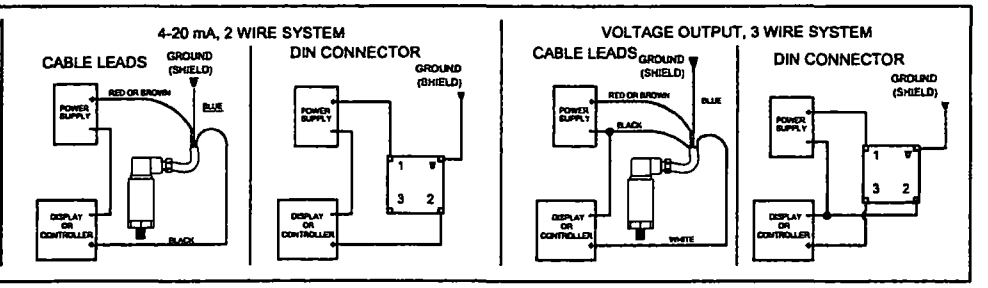

MECHANICAL PRESSURE SWITCHES

REO*TEMP*'s Mechanical Pressure Switches are suited for a variety of process applications, where electrical devices must be turned on/off in response to changing process pressure.

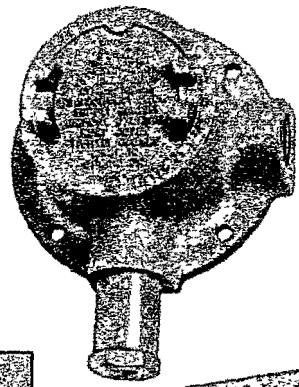

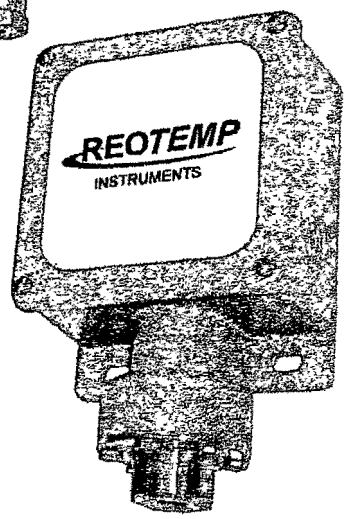

- **Reliable** Piston-Actuated, Force Balanced construction
- **Rugged**, high cycle rate tolerance
- **Precise** resolution of set points
- **Field-Adjustable** set points (No - charge factory calibration)
- **Simple Installation** - no special tools
- **Long Service Life** - no required periodic service - no spare parts required
- UL, CSA **certified** switching elements

Dimensions

Explosion Proof Case

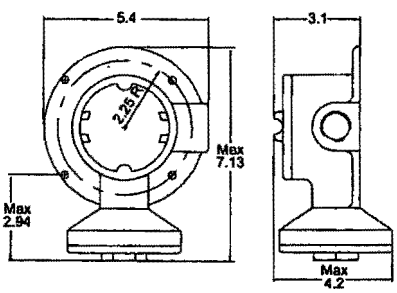

NEMA 4 Case

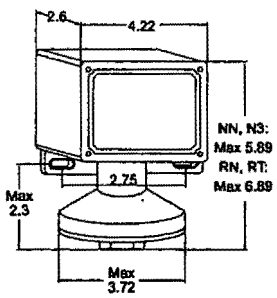

Dimensions in inches

Standard Specifications

Switching Elements: SPDT, or DPDT

Current Capacity: 15A at 250VAC; 5A at 30VAC

Housing: NEMA 4, 4X, or Explosion Proof (Class.1, Group C & D; Class.2, Group E,F,G, Division 1, 2)

Electrical Outlet: 3/4" NPTF

Adjustable Setpoints: From full vacuum to 550psi

Wetted Diaphragm: Teflon/Buna, 316 SS/Viton.

Wetted Pressure Ports: 316 SS, Aluminum, Cast Iron

Overrange: 200 psi to 1,500 psi

Warranty: 3 years

Note: Specifications are for standard switches shown on next page. A wide variety of alternate housings, ranges, switches, wetted parts and options are available on request.

REOTEMP INSTRUMENTS
Telephone: (800) 648-7737 FAX (858) 784-0720 • sales@reotemp.com • www.reotemp.com

Mechanical Pressure Switches

How to Order

Pressure Switch	Pressure Range	Housing	Switch	Diaphragm (wetted)	Pressure Port (wetted)	Options
PS	— 0630	— NN	— K	— N4	— C2	—

Pressure Range

Overrange	Proof	Pressure Range (Set point must be within range)		Typical Dead Band (at mid point)
		Pressure		
		Code	Range	
200 psi	400 psi	1264	2.5 - 45 INWC	0.8 INWC
		1220	.04 - 2.0 psi	0.1psi
		1250	.75 - 12 psi	0.1psi
750 psi	1000 psi	0440	2 - 25 psi	0.3psi
		0450	3 - 50 psi	0.4psi
1500 psi	2500 psi	0630	12 - 100 psi	0.9psi
		0650	20 - 180 psi	1.4psi
		0530	25 - 240 psi	2.2psi
		0545	45 - 550 psi	3.9psi
		Vacuum		
750 psi	1000 psi	5418	-30" Hg	0.5" Hg
		Compound		
200 psi	400 psi	5217	-40/0/40 INWC	1.1 INWC
1500 psi	2500 psi	5626	-30 Hg/0/10 psi	1" Hg/.5 psi
		5636	-30 Hg/0/80 psi	1.4" Hg/.7 psi

Housing

Weather tight:NEMA 4, 4X, IP65:

NN = Aluminum, One Outlet (R)

N3 = Aluminum, two Outlets (L,R)

RN = Aluminum, with 6-place Terminal Block
One outlet (R)

RT = 316SS, with 6-place Terminal Block
One outlet (R)

Explosion Proof
(Class 1, Group C & D; Class II, Group E, F & G; Division 1, 2)

L = Cast Iron, One Outlet (R)
(Housing is weather tight with CG option)

Switch

K = Single (SPDT)
KK = Dual (DPDT) - (KK has 6x dead band multiplier)
Both Switches: 15 A @ 250 VAC, 5A @ 30 VDC

Options / Accessories

MM= Vacuum protector plate (STD with vacuum + compound range)
CG= Cemented Cover Gasket
YY= Epoxy coating (Exterior)
RR= Stainless Steel tag (TT = H.D. Tag)
SP= Specify set point (set by factory, N/C)
Example: SP 50A = 50psi ascending
(If set point not specified, factory will set at mid point.)

316SS Diaphragm Seals
(Max working pressure = 1,500 psi)

Process Connection	Code for 04-,05-,06-, 54-,56- ranges	Code for 12-,54-,56- ranges
1/2"NPTF	W52S	W62S
1/4"NPTF	W54S	W64S
ANSI Flange (Specify Size)	W5FS	W6FS
	std. fill = silicone	

Other diaphragm seals available - consult factory.

Pressure Port (Wetted)

316SS

C1 = 1/4" NPTF

C2 = 1/2" NPTF

Sanitary Triclamp
(3-A) Max. 600psi with Std. clamp

C8 = 1 1/2" Triclamp
(ranges 05-,06-,56-)

C9 = 2" Triclamp
(ranges 04-,05-,06-,54-,56-)

Other Triclamp sizes available.
std. fill = glycerin

optional 3-A triclamp

Aluminum
(Available on ranges beginning 12, 04, 52, 54)

B1 = 1/4" NPTF
B2 = 1/2" NPTF

Cast Iron
(Available on ranges beginning 06, 05, 56)

F1 = 1/4" NPTF
F2 = 1/2" NPTF

Diaphragm (Wetted)

N4 = Teflon - coated Polyamide w/ Buna O - ring
M4 = 316SS w/ Viton O - ring (required with 56- ranges)

TRI-MODE PRESSURE SENSOR

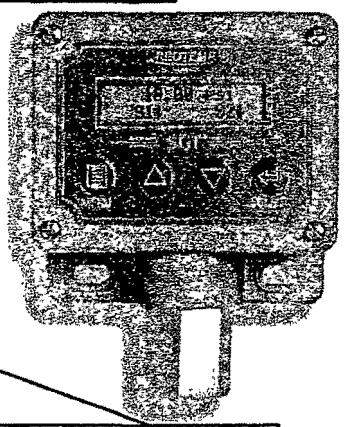

Model S G T®

All in One Easy-to-use Device

Switch	Gauge	Transmitter	
• Two SPST Switches • Switches are independent, Programmable (to SPDT, DPST, HH, LL, HL) • Adjustable Setpoints, dead bands • Display shows switch status • Open or closed failsafe	• Local Indicator • Ranges VAC., 10psi to 2,000psi • 13 selectable engineering units • 0.5% Accuracy • Bench recalibrator	• 4-20 mA Output • Easy to Program • Zero & span adjustable • Up to 5:1 turndown • ± 10% zero offset • High or low failsafe	• Loop Powered (14-30VDC) • NEMA 4, 4X, IP65 • Easy, intuitive programming • 2 - Line x 16 character display • 316SS, Hast. C-276, or Monel pressure port

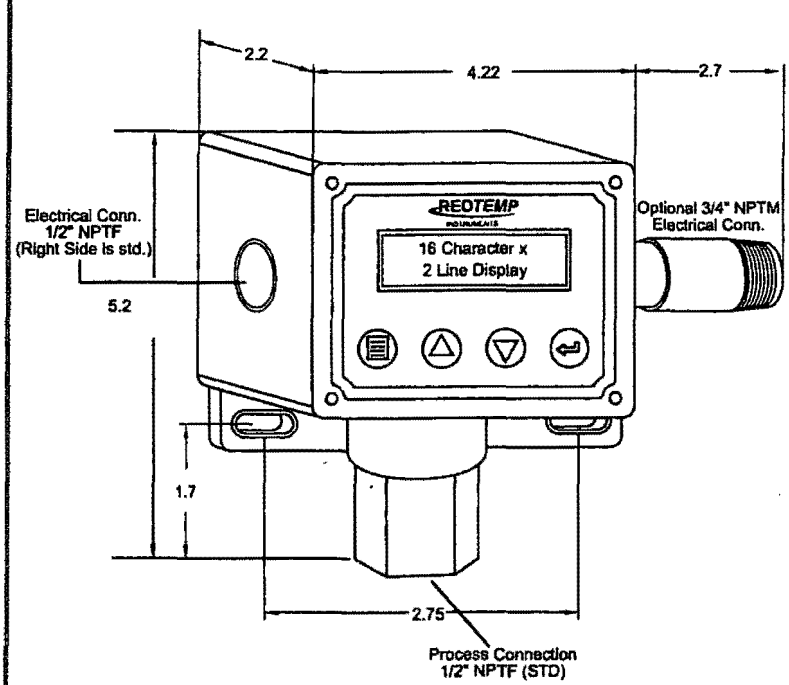

The **REOTEMP** SGT Pressure Switch is a convenient, multi-purpose indicator for local and remote pressure sensing. The SGT® combines three pressure instruments in one easy to use, self-diagnostic configuration.

Switch: Two independent, programmable SPST Solid State Relays

Gauge: Local digital pressure indicator.

Transmitter: Independent 4-20mA Output for remote display.

Operating the SGT is made simple with a descriptive menu structure with a helpful escape function. The SGT is ideal for applications requiring multiple pressure sensors in a confined area, or consolidating space in a process line.

REOTEMP INSTRUMENTS
Telephone: (800) 648-7737 FAX (858) 784-0720 • sales@reotemp.com • www.reotemp.com

TRI-MODE PRESSURE SENSOR

SGT® Specifications

Ranges. Vaccum, pressure to 2,000psi
Over-pressure: 1.5 x range
Temperature (°F): Process: -20/250°F Ambient: -20/160°F
Compensated: -20/160°F Storage: -40/185°F
Long-Term Accuracy: 0.5% URL Stability: 0.5% URL per yr.
Power: Supply: 14-30VDC (loop powered)
Electrical Protection: reverse polarity, EMI/RFI
Memory: Non-volatile
Transmitter Response Time: Sensor Sampling Rate: 20 ms
Switches: ≤ 10 ms Transmitter (90% FSO): ≤ 15 mg
Self-Diagnostic: ≤ 1 sec. Gauge Update: 600 ms (nom.)
Switch: two independent solid state MOS relays: SPST, NO
Ratings: 1 A @ 25°C; 0.6 A @ 71°C; 125VAC/120VDC
Max. inrush: 3A @ 23°C
Off-State Leakage Current: 10 μa Range: 0 to 100% URL
Deadband: 0.2 to 100% URL Failsafe: open or closed
Gauge: Range: 0 to 150% of URL (Vacuum, 100%, of URL)
Resolution: ≤ 0.1% URL
Engineering Units: 13 selectable
Transmitter: Analog, Loop powered: 4-20 mA, 2-wire
Zero Offset: +10% URL Span: 20% to 100% URL
Failsfe: 3.6 mA or 22mA (per NAMUR NE43)
Wetted Parts (Std.) Sensor: Ceramic (Al_2O_3)
Process Port: 316SS, 1/2" NPTF O-ring: Viton
Enclosure(Std.): Aluminum with 1 or 2 3/4" NPT conduit connections
Terminal Block: 14-28 AWG
Protection: NEMA 4X, IP65
Mechanical: Vibration: 2g @ 15-150 Hz.; 1g @ 150-2,000 Hz
Drop/Topple: per SAMA PMC 31.1 Weight: 1.68 lb
Agency Approvals: UL, cUL (Class I, II, III; Div 2; Nonincendive
ATEX Directive 94/9/EC Ex II 3 G/D

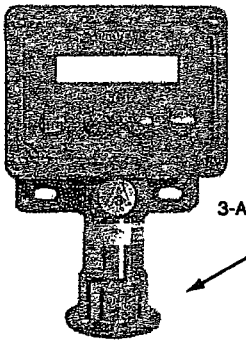

SGT with optional 316SS
3-A Triclamp Sanitary Connection

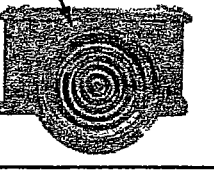

Menu structure

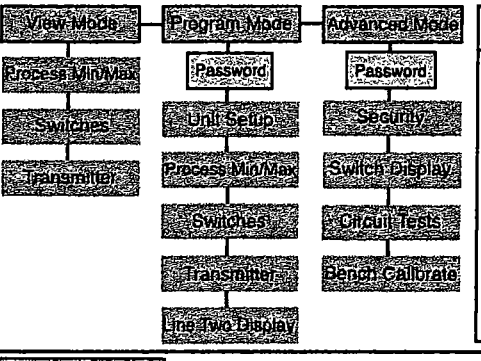

Factory Programmed Settings

Switch:	(S1)	(S2)
Close = 80%URL		20%URL
Open = 90%URL		10%URL
Failsafe =	Open	Open
Flash =	Closed	Closed

Gage Units: psi
Display = Switch Status
Transmitter:
4-20mA = 0% - 100%URL
Failsafe = 3.6 mA
Password = 0000

HOW TO ORDER

Pressure Range	Electrical Connection	Process Connection	Wetted Materials	Options/ Accessories
SGT — 20	— 2R	— 2F	— VS	— RR

Ranges

10 = 0-10psig 500 = 0-500psig
20 = 0-20psig 1K = 0-1000psig
50 = 0-50psig 2K = 0-2000psig
100 = 0-100psig 30V = 30"-0 Hg Vac
Absolute ranges available.
Other Engineering units (menu selectable):
inH_2O, ftH_2O, in Hg, bar, mbar, mmH, mH_2O, mmHg, kg/cm, Pa, kPa, MPa

Electrical Connection

2R = 1/2" NPTF (Right) (std.)
2L = 1/2" NPTF (Left)
2B = 1/2" NPTF (R + L)
Atex/CE Compliant:
3R = 3/4" NPTM (Right)
3L = 3/4" NPTM (Left)
3B = 3/4" NPTM (R+L)

Process Connection

2F = 1/2" NPTF (std.)
2M = 1/2" NPTM
BF = G1/2" (F)
Sanitary Triclamp (3-A) Max 600psi with std. clamp
C8 = 1 1/2" Triclamp
C9 = 2" Triclamp
Other Triclamp sizes available. std. fill = glycerin

Wetted

O-Rings	Temp °F
V = Viton(std)	(-20/250°F)
B = Buna-N	(-40/200°F)
N = Neoprene	(0/200°F)
E = EPR	(-40/200°F)
K = Kalrez	(40/250°F)

Pressure Port
S = 316SS (std)
H = Hast. C-276
M = Monel
Triclamp Wetted Parts
SS = All 316SS

Options

AB = Absolute Pressure Range
RR = S.S. Tag
PK = Pipe Mounting Kit
CE = Atex Approved CE compliant configuration (requires # 3 elec. conn.)
PP = Fiber Tag
W52S = Diaphragm Seal, 316SS, w/ 1/2" NPTF (other seals available) Max press.= 1,500 psi) std. fill = silicone
CC = Cert. of Calibraton
CM = Cert. of Wetted Materais

NEEDLE VALVES

PRESSURE ACCESSORIES

REO*TEMP* needle valves are high-quality, instrument grade valves that are designed for reliable operation and extended service life in a variety of environments. Standard features such as non-rotating tips, packing below stem threads, mirror finish packing surfaces and bonnet locking pins provide for smooth, safe, and trouble-free service.

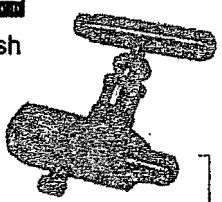

SOFT SEAT

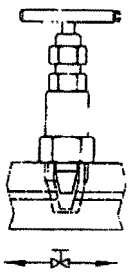

Soft, replaceable Delrin seat. Ideal for fluids containing solid particles or viscous fluids Max. temp: 212°F.

- Straight thru path
- Roddable for easy cleanout
- Delrin seat
- High throughput
- Bidirectional

	PART NUMBERS	
NPT, max pressure @ 100C	CARBON STEEL	316 S.S.
1/2" MXF, 6000#	G5C166MF	G5SS166MF
1/2" MXF, 6000#, NACE		G5SS166MF-NC
1/2" FXF, 6000#	G5C166FF	G5SS166FF
1/4" MXF, 6000#	G5C144MF	G5SS144MF
1/4" FXF, 6000#	G5C144FF	G5SS144FF

Optional seat materials: KEL-F, PEEK, PTFE

HARD SEAT

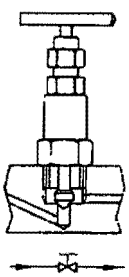

Metal seat and tip for high-pressure isolation of instrument lines. Suitable for liquid or gas service. Max. temp: 460°F.

- Angled flow path for finer metering
- Metal-to-Metal bubble tight seal

	PART NUMBERS	
NPT, max pressure @ 100C	CARBON STEEL	316 S.S.
1/2" MXF, 6000#	N2C166MF	N2SS166MF
1/2" MXF, 10,000#	N2C266MF	N2SS266MF
1/2" MXF, 10,000#, NACE		N2SS266MF-NC
1/2" FXF, 6000#	N2C166FF	N2SS166FF
1/2" FXF, 10,000#	N2C266FF	N2SS266FF
1/4" MXF, 6000#	N2C144MF	N2SS144MF
1/4" FXF, 6000#	N2C144FF	N2SS144FF

Note: for "Block & Bleed" design with integral bleed, substitute B8 for N2.

SOFT TIP

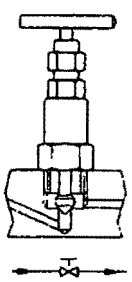

Soft Delrin tip on metal stem. Ideal for gas service. Max. temp: 212°F.

- Angled flow path for finer metering
- Delrin tip / metal seat
- Bubble-tight seal

	PART NUMBERS	
NPT, max pressure @ 100C	CARBON STEEL	316 S.S.
1/2" MXF, 6000#	F3C166MF	F3SS166MF
1/2" FXF, 6000#	F3C166FF	F3SS166FF
1/4" MXF, 6000#	F3C144MF	F3SS144MF
1/4" FXF, 6000#	F3C144FF	F3SS144FF

Optional items available: Angle pattern valves, high temperature assemblies (to 1,000°F), high pressure tip assemblies, oxygen cleaning, NACE certification, compression fitting ends, multi-outlet valves, valve manifolds.

Optional valve materials: Brass, Monel, Hastelloy C, 304 S.S., 316 S.S.

Also Available: Mini Needle Valves; Manifolds.

REOTEMP INSTRUMENTS
Telephone: (800) 648-7737 FAX (858) 784-0720 • sales@reotemp.com • www.reotemp.com

SNUBBERS

REOTEMP Snubbers are a simple cost-effective solution to harmful pressure surges and pulsation. When a REOTEMP Snubber is installed it absorbs pulsation and surges - protecting your instrumentation and stabilizing the pointer for easier readings. Available in an adjustable self-cleaning piston design or economical porous disc type.

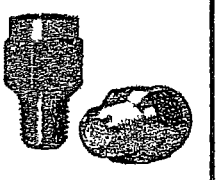

POROUS DISC TYPE

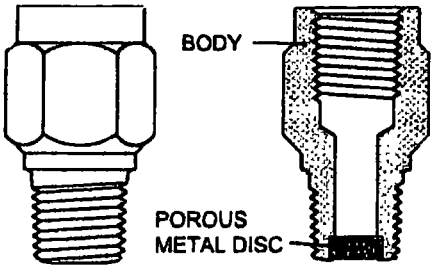

- Economical choice for non-clogging applications
- Different porosities available for various viscosities

Material	Max. PSI	NPT	Porosity	Part #
Brass	5,000	1/4	Liquid	PXS-722BE
			Gas	PXS-722BG
		1/2	Liquid	PXS-723BE
			Gas	PXS-723BG
303SS	15,000	1/4	Liquid	PXS-722SE
			Gas	PXS-722SG
		1/2	Liquid	PXS-723SE
			Gas	PXS-723SG

Other Porosities available: "D"= for thick oils
"HX" = for Hi-pressure gas

PISTON TYPE - Short Orifice

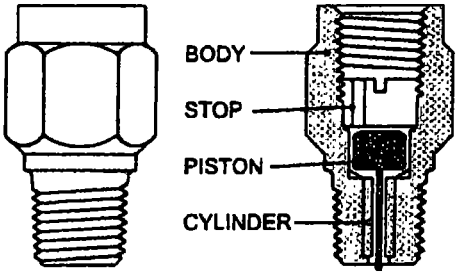

- Moving Piston Design for self-cleaning action
- Solid Body for High pressure resistance
- Three pistons included for adjustable snubbing

Material	Max. PSI	NPT	Length (in.)	Part #
Brass Monel	5,000	1/4	1.5	PXS-022B PXS-022M
303SS 316SS	15,000			PXS-022S PXS-022SS
Brass Monel	5,000	1/2	2.0	PXS-023B PXS-023M
303SS 316SS	15,000			PXS-023S PXS-023SS

PISTON TYPE - Long Orifice

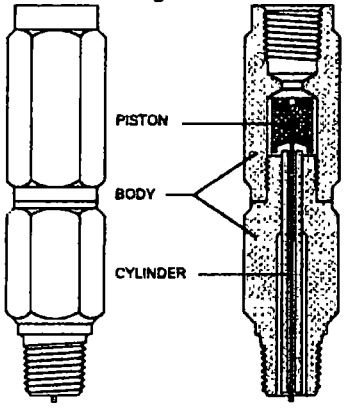

- Moving Piston Design for self-cleaning action
- Long orifice for smoother snubbing
- Three pistons included for adjustable snubbing
- Center Joint (1/4" and brass models) for easier adjustment

Material	Max. PSI	NPT	Length (in.)	Part #
Brass	3,000	1/4	3.46	PXS-010B
303SS 316SS	5,000			PXS-010S PXS-010SS
Brass	5,000	1/2	3.61	PXS-060B
303SS 316SS	10,000			PXS-060S PXS-060SS

PRESSURE GAUGE ACCESSORIES

Siphons

Pigtail siphons are used in steam service to protect the instrument from direct exposure to high temperature steam.

Common Siphon Part #'s

NPT	Material	Sched.	180 deg.	90 deg.	360 deg
1/4"	Steel	40	PXS21SS	PXS22SS	PXS24SS
1/4"		80	PXS21SX	PXS22SX	PXS24SX
1/2"		80	PXS51SX	PXS52SX	PXS54SX
1/4"	304SS	40	PXS214S	PXS224S	PXS244S
1/4"		80	PXS214X	PXS224X	PXS244X
1/2"		80	PXS514X	PXS524X	PXS544X
1/2"	316SS	40	PXS516S	PXS526S	PXS546S

= normally in stock

How to Specify Siphons:

PXS —	2 —	1 —	4 —	X
Pressure Accessory Siphon	(NPT)	(Style)	(Material)	(Pipe Schedule)
	2= 1/4" 5=1/2"	1=180° 2= 90° 3=270° 4=360°	A=Carbon Steel (or alloy Stl Welded) S= Carbon Steel Seamless 4= 304SS 6= 316SS 1= Chrome Moly P11 2= Chrome Moly P22	S= Sch 40 X= Sch 80 1= Sch 160 (1/2" only) D= xx heavy (1/2" only)

Gauge Cocks

1/4" NPT Brass, Max 100 p.s.i.

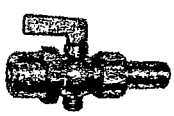

Female - Male Union
#PXG-3101

Female - Female
#PXG-1380

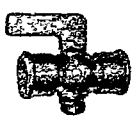

Female - Female
#PXG-1440

Restrictor Screws

A restrictor screw (or throttle screw) is threaded into the process opening of the pressure gauge and helps to dampen rapid pressure fluctuations. This reduces pointer flutter, and can prolong the life of the gauge. Many REO*TEMP* industrial gauges are shipped with restrictor screw installed.

Specify part # PXR.

REOTEMP INSTRUMENTS
Telephone: (800) 648-7737 FAX (858) 784-0720 · sales@reotemp.com · www.reotemp.com

Other Pressure Accessories & Services

Pressure Accessories

ELECTRICAL (ALARM) CONTACTS

- Two easily adjustable setpoints
- Can be used to open or close on rise
- 0.7A max current (higher loads can be run through relay)
- Available on 4" dial (P/N PXEM21-40) or 4 1/2" dial (P/N PXEM21-45)

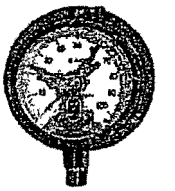

MAX POINTER INDICATORS

- Indicates max pressure reached
- Easily reset
- Liquid fillable (Works best dry, though)
- Available for: 2 1/2" dial (MP-PR25)
  4" dial (MP-PR40)
  4 1/2" dial (MP-PT45)

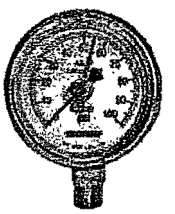

CUSTOM DIALS

REO*TEMP* can provide custom dials with:
- Special Ranges or designs
- Custom logos
- Colored zones

Consult factory for assistance with dial designs

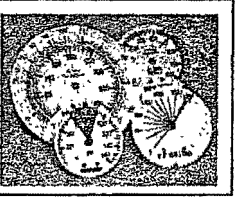

OPTIONAL WINDOWS

- Polycarbonate
- Laminated Safety Glass
- Polysulfone (for autoclaving)

Pressure Services

Pressure Instrument Repair Services– Reotemp will be glad to quote on your repair and servicing needs for pressure gauges, transmitters, switches, and diaphragm seal systems.

Calibration and Certification – Services include testing, calibration, and certification of pressure gauges, transmitters, switches, and diaphragm seal systems. All certification is NIST traceable.

Certificate Description	Part#
Conformance/ calibration to NIST	CNISTPG
General calibration sticker	CALSTKPG
3 Logged Points - sticker & Cert.	CCALPG-3
5 Logged Points - sticker & Cert.	CCALPG-5
Switch setpoint cert	CCALSW

Oxygen Cleaning - removes oil from gauge intended for oxygen service.

Diaphragm Seal Application Assistance - REO*TEMP* will assist you in designing and specifying the most effective diaphragm seal system for your pressure or vacuum application. Contact factory for details.

Other REO*TEMP* Products

Temperature Products (Catalog # TI)

- Bimetal Thermometers
- Thermowells
- Sanitary Thermometers & Thermowells
- Filled System Thermometers
- Digital Thermometers
- Surface & Pocket Thermometers
- Temperature Switches

Thermocouples & RTD's (Catalog # RTDTC)

- Head Assemblies
- Stem Assemblies
- Custom Lead Wire Configuration
- Sanitary 3-A RTD's
- Transmitters
- Digital displays
- Thermowells & Accessories
- Specialty Thermocouples
  - -Cut-to-Length
  - -Ceramic Tube
  - -Metal Tube
  - -Bare Wire
  - -Plastics
  - -Melt Bolt
- Bulk Thermocouple Wire

REO*TEMP* Warranty Information

One Year Warranty

REO*TEMP* warrants all pressure gauges and pressure products against defective workmanship or materials under normal use and service for one year following date of shipment. Reotemp's liability is limited to repair or replacement at the factory, shipping charges prepaid. This warranty does not cover deterioration from normal wear and tear, exposure to corrosive materials, exposure to temperatures or pressures in excess of those recommended, excessive vibration, or forces or abrasion which cause deformation of component parts. This warranty is expressly in lieu of any other warranty, expressed or implied. Reotemp shall not be liable for any direct or consequential damages arising out of any defects or from any cause whatsoever. Suitability of product for the customer's application rests with the customer; REO*TEMP* does not warrant suitability of its product for the application selected by customer.

REO*TEMP* reserves the right to make product improvements and change its specification stated throughout this catalog at anytime without notification. Please contact the factory on all critical dimensions and specifications for verification.

Ph (800) 648-7737 • Fx (858) 784-0720 • sales@reotemp.com • www.reotemp.com
10656 Roselle St. • San Diego, CA • 92121

PROJECT: GROUNDWATER TREATMENT PLANT
CUSTOMER: W. A. RASIC CONSTRUCTION
CUSTOMER JOB NO.:
PLANT:
LOCATION:

REL. HUMIDITY / TEMP. INDICATING TRANSMITTER

NO.	BY	DATE	REVISION
A	EIS	7/22/2008	FOR APPROVAL

SHEET 1 OF 1 | SPEC NO. | REV. | CONTRACT | DATE | REQ. P.O. | BY | CHK'D | APPR.

1	TAG NUMBER: TIT-227 / MIT-227	SERVICE: STRIPPED AIR TEMPERATURE AND HUMIDITY
GENERAL 2	FUNCTION	RECORD ☐ INDICATE ☒ CONTROL ☐ BLIND ☐ TRANS ☒ OTHER
3	CASE	MFR STD ☒ NOM SIZE ____ COLOR: MFR STD ☒ OTHER ____
4	MOUNTING	FLUSH ☐ SURFACE ☒ YOKE ☐ OTHER ____
5	ENCLOSURE CLASS	GEN. PURPOSE ☐ WEATHER PROOF ☒ EXPLOSION PROOF ☐ FOR USE IN INTRIN SAFE SYSTEM ☐ OTHER ____
6	POWER SUPPLY	117 V 60 HZ ☐ OTHER AC ____ DC 24 VOLTS ____
7	CHART	STRIP ☐ ____ ROLL ☐ ____ FOLD ☐ ____ CIRCULAR ____ TIME MKS ____
8	CHART DRIVE	SPEED ____ POWER ____
9	SCALES	TYPE ____ RANGE 1 ____ 2 ____ 3 ____ 4 ____
TRANSMITTER 10	TRANSMITTER OUTPUT	4 - 20 mA ☒ 10 - 50 mA ☐ 21 - 103 kPa (3 - 15 psig) ☐ OTHER ____ FOR RECEIVER SEE SPEC SHEET ____
CONTROLLER 11	CONTROL MODES	P = PROP (GAIN) I = INTEGRAL (AUTO - RESET) D = DERIVATIVE (RATE) SUB: s = SLOW f = FAST P ☐ PI ☐ PD ☐ PID ☐ If ☐ Df ☐ Is ☐ Ds ☐ OTHER ____
12	ACTION	ON MEAS INCREASE OUTPUT: INCREASES ☒ DECREASES ☐
13	AUTO - MAN SWITCH	NONE ☐ MFR STD. ☐ OTHER ____
14	SET POINT ADJ.	MANUAL ☐ EXTERNAL ☐ REMOTE ☐ OTHER ____
15	MANUAL REG.	NONE ☐ MFR STD. ☐ OTHER ____
16	OUTPUT	4 - 20 mA ☐ 10 - 50 mA ☐ 21 - 103 kPa (3 - 15 psig) ☐ OTHER ____
ELEMENT 17	FILL	SAMA CLASS RTD COMPENSATION ____
18	PROCESS DATA	TEMP: NORMAL ____ MAX ____ MAX PRESS ____
19	RANGE	FIXED ☐ ADJ RANGE ____ SET AT ____ OVERRANGE PROTECTION TO ____
20	BULB	TYPE RTD MTL 316 SS EXTENSION LENGTH ____ TYPE ____ SIZE. DIAMETER ____ LENGTH ____ INSERTION ____ CONN: ____ LOCATION ____ FT ABOVE ☐ BELOW ☐ INSTR
21	CAPILLARY	MFR STD ☐ LENGTH ____ MTL ____ ARMOR ____
22	WELL	MTL 316 SS INSERTION ____ LAG EXT. ____ CONN ____ CONST: DRILLED ☐ BUILT-UP ☐ OTHER ____
23	ALARM SWITCHES	QUANTITY ____ FORM ____ RATING ____
24	FUNCTION	TEMP. ☐ DEVIATION ☐ CONTACTS TO ____ ON TEMP. INCREASE
OPTIONS 25	OPTIONS	FILT-REG ☐ SUP GAGE ☐ OUTPUT GAGE ☐ ____ CHARTS OTHER ____
26	MFR & MODEL NO. ***	NEWPORT. HX93DAC-F-D

NOTES: *** VENDOR TO CONFIRM MODEL NO
1. VENDOR SHALL PROVIDE A STAINLESS STEEL NAMEPLATE STAMPED WITH INSTRUMENT TAG No

BLANK PAGE

Newport HX93A-RP1 Humidity and Temperature Transmitter with Display

OUR PRICE: $375.00 (+$10.00)

Manufacturer: Newport Electronics

Part Number: HX93DAC

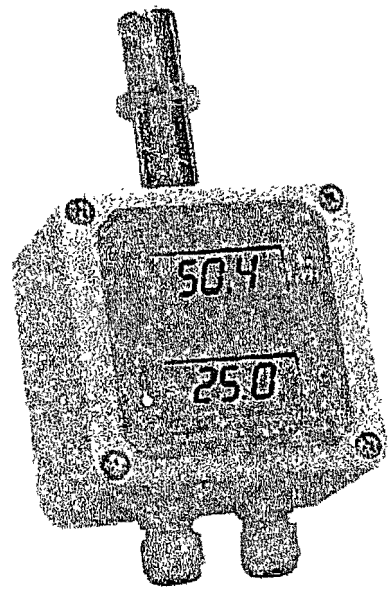

View Larger Image

Select Product Options

* denotes required field

Newport HX93 Model Selection*

Duct Mount RH/Temp Transmitter w ith Display, Deg F HX93DAC-F-D (+ $10.00)

NIST Traceable Calibration - Humidity/Temp Transmitter*

Quantity: 1 Add to Cart

Email this page to a friend

Newport HX93A Humidity Temperature Transmitter

The HX93A and HX93DA Series transmitters provide remote and on-site monitoring of relative humidity and temperature. Both series output a linearized current or voltage signal proportional to the measured humidity or temperature. RH outputs are temperature compensated. Current output models enable placing of the transmitter at a remote location virtually any distance away from the measuring device.

The HX93DA models feature built-in dual displays that indicate both humidity and temperature simultaneously. All utilize a thin-film polymer capacitor to sense relative humidity, and a Platinum 100 ohm RTD to accurately sense temperature.

A stainless steel mesh type filter protects the sensors, which is easily removable for cleaning. Mounting screws are easily accessible inside the rugged, ABS enclosure, which houses and protects the electronics to NEMA 13 specifications. .

Relative Humidity Control System: The HX93A and HX93DA Series interface directly with NEWPORT's Meters and Controllers to create a complete

NEMA 1, 2, 3, 3R, 4, 4X, 5, 12 and 13 specifications
Connections: Liquid-tight nylon with neoprene gland, for 0.09 to 0.265" diameter cable; i
nternal 4-pin terminal block accepts 14-22 gauge wire

Dimensions:
Enclosure: HX93A(*) & HX93A(*)-D: 79.8 x 81.8 x 54.9 mm (3.14" x 3.22" x 2.16")
Probe: HX93A(*)-D: 15.7 D x 124.5 mm L (0.620" x 4.9")
Weight: HX93A(*): 170 g (6 oz); HX93A(*)-D: 187 g (6.6 oz).

Display (HX93DA Series only)
Dual Miniature Loop-Powered Indicators: 3 1/2 digit LCDReading Rate: 2.5 times per second
Display Accuracy: Relative Humidity: +/-2.5% RH Temperature: +/-0.6 Deg C (1 Deg F)
Display Resolution: Relative Humidity: 0.1% RH Temperature: 0.1 Deg C (0.1 Deg F)
Display Accuracy in Relation to Output: Relative Humidity: +/-0.3%
RH Temperature: +/-0.3 Deg C (0.5 Deg F)

1 YEAR WARRANTY

MADE IN USA

CE

User's Guide

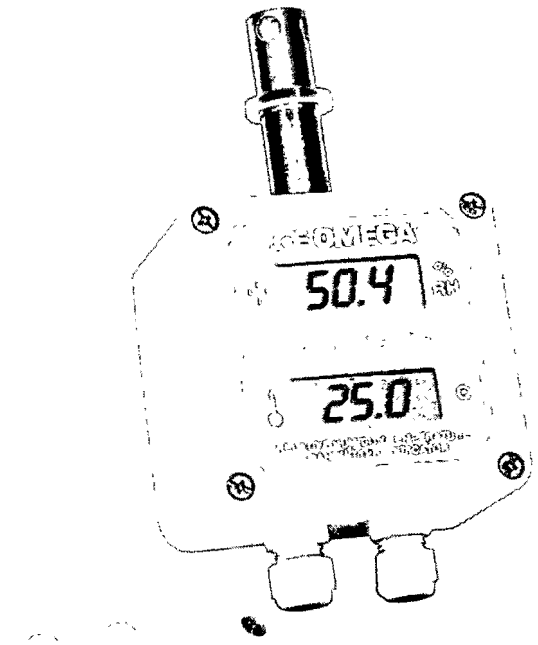

Shop online at

omega.com®

OMEGA®

www.omega.com

e-mail: info@omega.com

ISO 9001 CERTIFIED CORPORATE QUALITY — STAMFORD, CT

ISO 9002 CERTIFIED CORPORATE QUALITY — MANCHESTER, UK

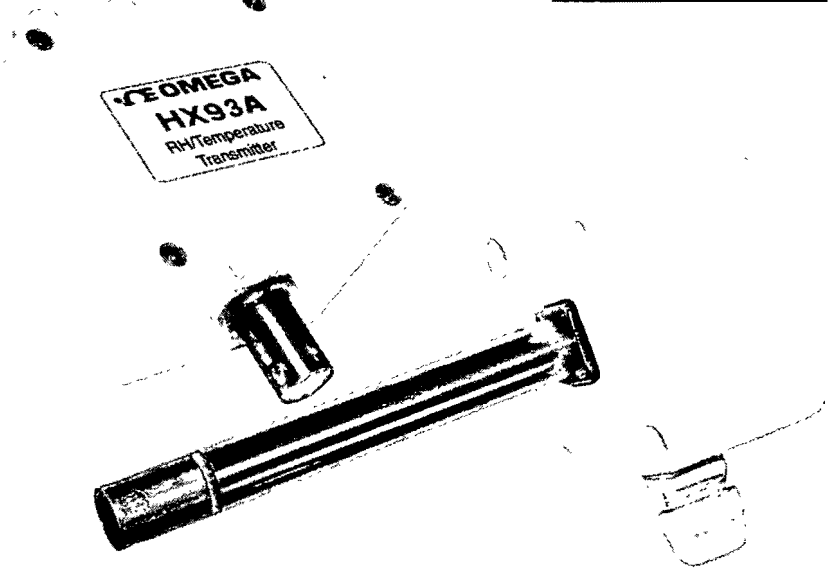

HX93A, HX93DA SERIES
RH/Temperature Transmitter

omega.com®
ΩOMEGA®

OMEGAnet® Online Service www.omega.com	Internet e-mail info@omega.com

Servicing North America:

USA:
ISO 9001 Certified
One Omega Drive, Box 4047
Stamford CT 06907-0047
Tel: (203) 359-1660 FAX: (203) 359-7700
e-mail: info@omega.com

Canada:
976 Bergar
Laval (Quebec) H7L 5A1, Canada
Tel: (514) 856-6928 FAX: (514) 856-6886
e-mail: info@omega.ca

For immediate technical or application assistance:

USA and Canada: Sales Service: 1-800-826-6342 / 1-800-TC-OMEGA®
Customer Service: 1-800-622-2378 / 1-800-622-BEST®
Engineering Service: 1-800-872-9436 / 1-800-USA-WHEN®
TELEX: 996404 EASYLINK: 62968934 CABLE: OMEGA

Mexico: En Español: (001) 203-359-7803 e-mail: espanol@omega.com
FAX: (001) 203-359-7807 info@omega.com.mx

Servicing Europe:

Benelux:
Postbus 8034, 1180 LA Amstelveen, The Netherlands
Tel: +31 (0)20 3472121 FAX: +31 (0)20 6434643
Toll Free in Benelux: 0800 0993344
e-mail: sales@omegaeng.nl

Czech Republic:
Frystatska 184, 733 01 Karviná, Czech Republic
Tel: +420 (0)59 6311899 FAX: +420 (0)59 6311114
Toll Free: 0800-1-66342 e-mail: info@omegashop.cz

France:
11, rue Jacques Cartier, 78280 Guyancourt, France
Tel: +33 (0)1 61 37 2900 FAX: +33 (0)1 30 57 5427
Toll Free in France: 0800 466 342
e-mail: sales@omega.fr

Germany/Austria:
Daimlerstrasse 26, D-75392 Deckenpfronn, Germany
Tel: +49 (0)7056 9398-0 FAX: +49 (0)7056 9398-29
Toll Free in Germany: 0800 639 7678
e-mail: info@omega.de

United Kingdom:
ISO 9002 Certified
One Omega Drive, River Bend Technology Centre
Northbank, Irlam, Manchester
M44 5BD United Kingdom
Tel: +44 (0)161 777 6611 FAX: +44 (0)161 777 6622
Toll Free in United Kingdom: 0800-488-488
e-mail: sales@omega.co.uk

It is the policy of OMEGA to comply with all worldwide safety and EMC/EMI regulations that apply. OMEGA is constantly pursuing certification of its products to the European New Approach Directives. OMEGA will add the CE mark to every appropriate device upon certification.

The information contained in this document is believed to be correct, but OMEGA Engineering, Inc accepts no liability for any errors it contains, and reserves the right to alter specifications without notice.
WARNING: These products are not designed for use in, and should not be used for, human applications.

Section		Page
1.	General Description	1
2.	Unpacking	1
3.	Theory of Operation	2
4.	Mounting	3
5.	Electrical Connections	4
6.	Current Transmitter Wiring Examples	4
7.	Voltage Transmitter Wiring Examples	5
8.	Relative Humidity Output Calculations	5
9.	RH Measured Vs Output Reading	6
10.	Temperature Output Calculations	6
11.	Calibration	7
12.	Calibration Procedure For HX93AC, HX93DA Series Relative Humidity Adjustment	7
13.	Calibration Procedure For HX93AC, HX93DA Series Temperature Adjustment	8
14.	Calibration Procedure For HX93AV Relative Humidity Adjustment	9
15.	Calibration Procedure For HX93AV Temperature Adjustment	10
15A,	Display Scaling For HX93DA Series	11
16.	Maintenance	12
17.	Specifications	12
18.	General Specifications	13

Figure **Page**

Figure 1 Basic Transmitter Set-up With Current Loop Output 2

Figure 2 Wall Mount Model Dimensions 3

Figure 3 Duct Mount And Remote Probe Model Dimensions 3

Figure 4 Current Transmitter Wiring Example (4 - 20 mA) 4

Figure 5 Voltage Transmitter Wiring Example 5

Figure 6 HX93AC Calibration Procedure Relative Humidity Adjustment 7

Figure 7 HX93AC Calibration Procedure Temperature Adjustment 8

Figure 8 HX93AV Calibration Procedure Relative Humidity Adjustment 9

Figure 9 HX93AV Calibration Procedure Temperature Adjustment 10

Figure 10 Transmitter Lid Rear View 11

1. General Description

The OMEGA® HX93A and HX93DA Series Relative Humidity/ Temperature Transmitter's provide a linearized and temperature compensated output signal of 4 to 20 mA or 0 to 1 Vdc depending upon the model selected for both relative humidity and temperature measurement. The output signals have been calibrated and scaled 0 to 100% for Relative Humidity and –20 to 75°C for temperature. A thin film polymer capacitor senses relative humidity while an 100 ohm RTD measures temperature, both are protected by a stainless steel filter that is easily removed for cleaning. The Nema rated polycarbonate enclosure and cable entry connection provides weathertight protection. Screws are provided for mounting via internal holes inside the enclosure. The HX93DA Series has dual built-in indicators for humidity and temperature.

2. Unpacking

Remove the packing list and verify that you have received all your equipment. If you have any questions about the shipment, please call our Customer Service Department at:

1-800-622-2378 or 203-359-1660. On the web you can find us at:
www.omega.com e-mail: cservice@omega.com

When you receive the shipment, inspect the container and equipment for any signs of damage. Note any evidence of rough handling in transit. Immediately report any damage to the shipping agent.

NOTE

The carrier will not honor any damage claims unless all shipping material is saved for inspection. After examining and removing contents, save packing material and carton in the event reshipment is necessary.

The following items are supplied in the box with your HX93A transmitter.

- This Manual, # M0933A (1 ea.)
- #6 Wall Anchor and #6 Mounting Screw (2 ea.)
- Dewpoint Card (1 ea.)

Additional Transmitter Models Available

Model	Description
HX92AC	Wall mount RH transmitter (4 to 20 mA Output)
HX92AV	Wall mount RH transmitter (0 to 1 Vdc Output)
HX92AC-D	Duct mount RH transmitter (4 to 20 mA Output)
HX92AV-D	Duct mount RH transmitter (0 to 1 Vdc Output)

continued on next page

continued from page 1

HX15AV-W Wall mount "High Ambient Temperature" application RH/Temperature transmitter (dual 0 to 1 Vdc Output)

HX15AC-W Wall mount "High Ambient Temperature" application RH/Temperature transmitter (dual 4 to 20 mA Output)

HX15AV-D Duct mount "High Ambient Temperature" application RH/Temperature transmitter (dual 0 to 1 Vdc Output)

HX15AC-D Duct mount "High Ambient Temperature" application RH/Temperature transmitter (dual 4 to 20 mA Output)

3. Theory of Operation

A 4-20 mA loop is a series loop in which a transmitter will vary the current flow depending on the input to the transmitter. In the HX93A and the HX93DA Series the amount of current allowed to flow in the loop will vary depending on the relative humidity or temperature being measured by the sensor(s). Some advantages of a current output over a voltage output is that the signal measured is less susceptible to electrical noise interference and the loop can support more than one measuring instrument as long as the maximum loop resistance is not exceeded.

A typical application utilizing a current loop will normally consist of a power supply, the transmitter and a meter, recorder or controller to measure the current flow. The loop resistance in the sum of the measuring instruments and wire used. The maximum allowable loop resistance for the HX93A or HX93DA to function properly is found by using the following formula:

For HX93A R_{max} = (power supply voltage – 6 volts) ÷ .02 amps
EXAMPLE: (When using a 24 Vdc power supply).
R_{max} = (24 – 6) ÷ .02 amps = 900 ohms max loop resistance

For HX93DA R_{max} = (power supply voltage – 12 volts) ÷ .02 amps
EXAMPLE: (When using a 24 Vdc power supply).
R_{max} = (24 – 12) ÷ .02 amps = 600 ohms max loop resistance

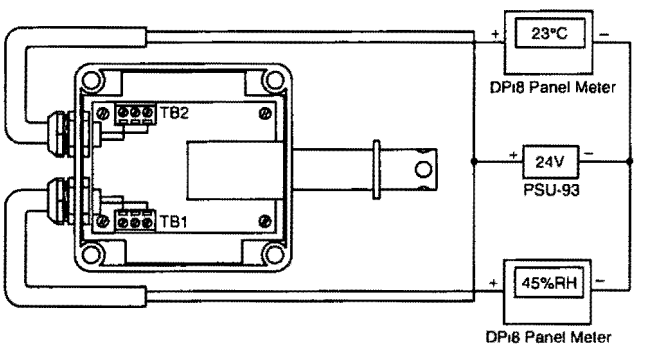

Figure 1 - Basic Transmitter Set-up With Current Loop Output

Complimentary Instruments

Power Supply, OMEGA® Part No.: PSU-93
Csi32 Series Panel Meters and Controllers

Recommended Accessories

Shielded Transmitter Cable, OMEGA® Part No.: TX4-100 (100 ft)
RH Calibration Kit, OMEGA® Part No.: HX92-CAL

4. Mounting

OMEGA's HX93A and HX93DA transmitter's are designed for either wall, duct or remote probe mounting depending upon model. Plastic wall anchors and mounting screws are included for wall mounting and remote probe models. A duct mounting kit is included with duct mount models.

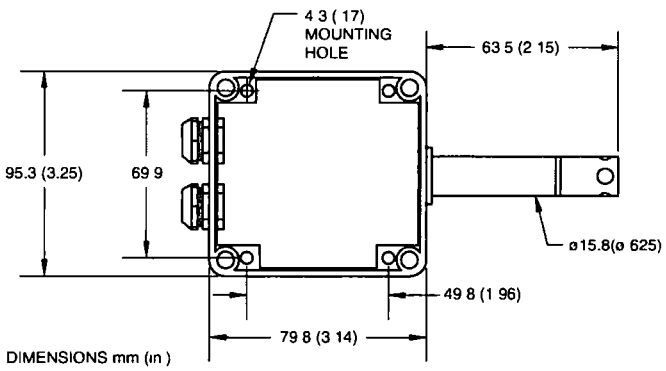

Figure 2 - Wall Mount Model Dimensions, mm (inches)

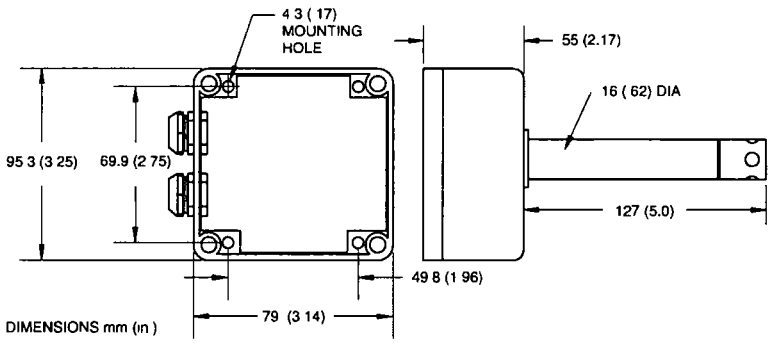

Figure 3 - Duct Mount & Remote Probe Model Dimensions, mm (inches)

5. Electrical Connections

CAUTION

All electrical connections and wiring should be performed by a suitably trained professional only.

Models: HX93AC, HX93AC-D, HX93AC-RP1, HX93DAC, HX93DAC-D,HX93DAC-RPI (Current Output)

TB1 - Relative Humidity	TB2 - Temperature
1. + Power Supply	1. + Power Supply
2. No Connection	2. No Connection
3. 4-20 mA Output	3. 4-20 mA Output

6. Current Transmitter Wiring Examples

For current output models (4 – 20 mA)

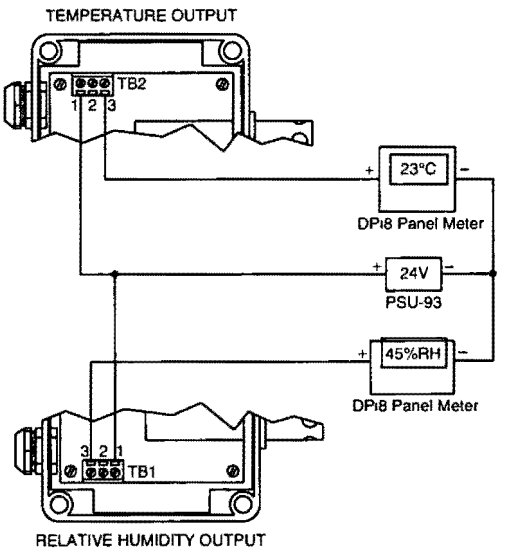

Figure 4 - Current Transmitter Wiring Example, (4 - 20 mA)

CAUTION

All electrical connections and wiring should be performed by a suitably trained professional only.

Models: HX93AV, HX93AV-D HX93AV-RP1 (Voltage Output)

TB1 - Relative Humidity	**TB2 - Temperature**
1. + Power Supply	1. + Power Supply
2. + Output	2. + Output
3. - Power Supply	3. - Power Supply

7. Voltage Transmitter Wiring Examples

For voltage output models (0 to 1 Vdc)

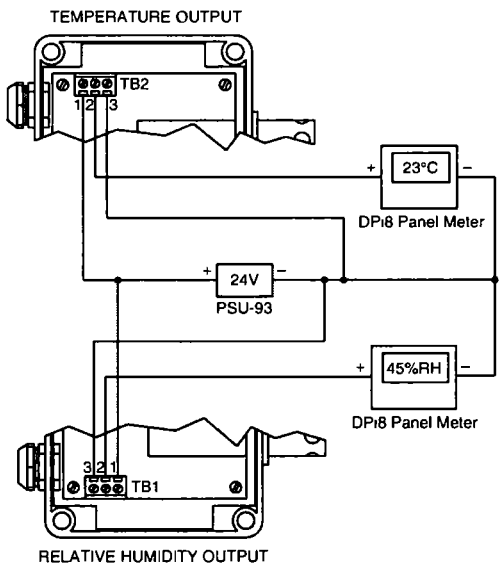

Figure 5 - Voltage Transmitter Wiring Example

8. Relative Humidity Output Calculations

To calculate % Relative Humidity by measuring the current or voltage output use the following formulas.

For current output:
% RH = (Current measured in miliamps – 4) ÷ .16
EXAMPLE: **(11.04 mA – 4) ÷ .16 = 44% RH**

For voltage output:
% RH = (Voltage measured in volts x 100)
EXAMPLE: **.44 x 100 = 44% RH**

9. RH Measured Vs Output Reading

% Relative Humidity	Output	
	Current (mA)	Voltage (Vdc)
5 4	0.8	.05
10	5.6	.10
15	6.4	.15
20	7.2	.20
25	8.0	.25
30	8.8	.30
35	9.6	.35
40	10.4	.40
45	11.2	.45
50	12.0	.50
55	12.8	.55
60	13.6	.60
65	14.4	.65
70	15.2	.70
75	16.0	.75
80	16.8	.80
85	17.6	.85
90	18.4	.90
95	19.2	.95

10. Temperature Output Calculations

To calculate Temperature by measuring the current or voltage output use the following formulas.

For Current output in °C (-20 to 75°C)
°C = (Output measured in miliamps – 4) ÷ .1684 - 20 = °C
EXAMPLE: (12.0 mA – 4) ÷ .1684 - 20 = 27.5°C

For Current output °F (-4 to 167°F)
°F = (Output measured in miliamps – 4) ÷ .0935 - 4 = °F
EXAMPLE: (12.0 mA – 4) ÷ .0935 - 4 = 81.6°F

For Voltage output in °C (-20 to 75°C)
°C = (Output measured in volts ÷ .010526) - 20 = °C
EXAMPLE: (0.50 Vdc ÷ .010526) - 20 = 27.5°C

For Voltage output °F (-4 to 167°F)
°F = (Output measured in volts ÷ .005848) - 4 = °F
EXAMPLE: (0.50 Vdc ÷ .005848) - 4 = 81.5°F

11. Calibration

Your transmitter has been factory calibrated to meet or exceed the specifications outlined in this manual. To maintain original specifications it is generally recommended that your transmitter be re-calibrated on an annual basis depending on operating conditions.

12. Calibration Procedure for HX93AC (all styles)

Relative Humidity Adjustment

Recommended equipment:

- Humidity Calibration Kit, OMEGA® Model No.: **HX92-CAL**
- Handheld Digital Multi-meter, OMEGA® Model No.: **HHM29**
- Dc Power Supply, OMEGA® Model No.: **PSU-93**

1. Remove enclosure cover
2. Connect transmitter as shown in figure below.
3. Apply power to transmitter and allow to warm up for 15 min.
4. Place unit in a 11% RH environment and allow to stabilize for 15 min.
5. Adjust potentiometer "P1" for a output reading of 5.76 mA
6. Place unit in a 75% RH environment and allow to stabilize for 15 min.
7. Adjust potentiometer "P2" for a output reading of 16.0 mA
8. Repeat steps 4, 5, 6, and 7 as necessary until proper readings are maintained.
9. Calibration complete.

NOTE:
Do not adjust P3. This is a factory setting.

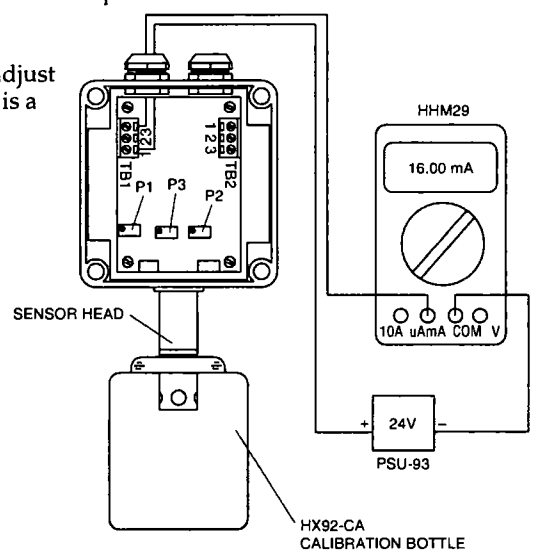

Figure 6 - HX93AC Calibration Procedure Relative Humidity Adjustment

13. Calibration Procedure for HX93AC (all styles)

Temperature Adjustment

Recommended equipment:

- RTD Simulator OMEGA® Model No.: **CL510-1**
- Handheld Digital Multi-meter, OMEGA® Model No.: **HHM29**
- Dc Power Supply, OMEGA® Model No.: **PSU-93**

1. Remove enclosure cover
2. Connect the power supply and multimeter as shown in the figure below.
3. Disconnect the 2-wire Connector "J4" from the main Board.
4. Connect the RTD simulator to the "J4" header on the main board as shown below.
5. Apply power to transmitter and allow to warm up for 10 min.
6. Set the RTD simulator to the 0°F position.
7. Adjust potentiometer "P5" on the main board for a output reading of 4.43 mA @ 0°F
8. Set the RTD simulator to the 150°F position.
9. Adjust potentiometer "P4" for a output reading of 18.46 mA 150°F
10. Repeat steps 6, 7, 8 and 9 as necessary until proper readings are maintained.
11. Calibration complete.

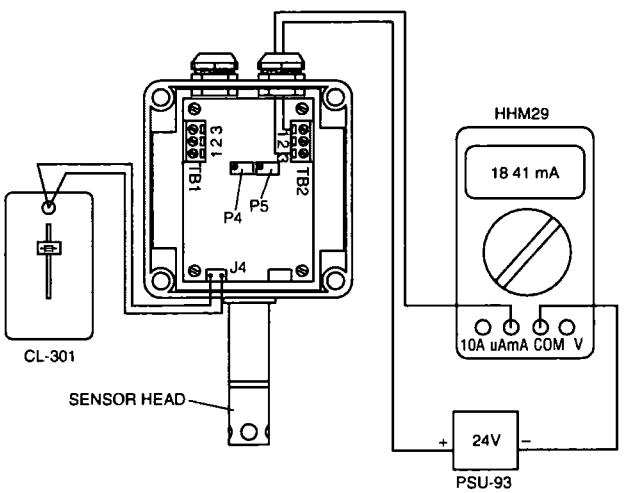

Figure 7 - HX93AC Calibration Procedure Temperature Adjustment

14. Calibration Procedure for HX93AV (all styles)

Relative Humidity Adjustment

Recommended equipment:

- Humidity Calibration Kit, OMEGA® Model No.: **HX92-CAL**
- Handheld Digital Multi-meter, OMEGA® Model No.: **HHM29B**
- Dc Power Supply, OMEGA® Model No.: **PSU-93**

1. Remove enclosure cover.
2. Connect transmitter as shown in figure below.
3. Apply power to transmitter and allow to warm up for 15 min.
4. Place unit in a 11% RH environment and allow to stabilize for 15 min.
5. Adjust potentiometer "P3" for a output reading of .110 Vdc.
6. Place unit in a 75% RH environment and allow to stabilize for 15 min.
7. Adjust potentiometer "P2" for a output reading of .750 Vdc.
8. Repeat steps 4, 5, 6, and 7 as necessary until proper readings are maintained.
9. Calibration complete.

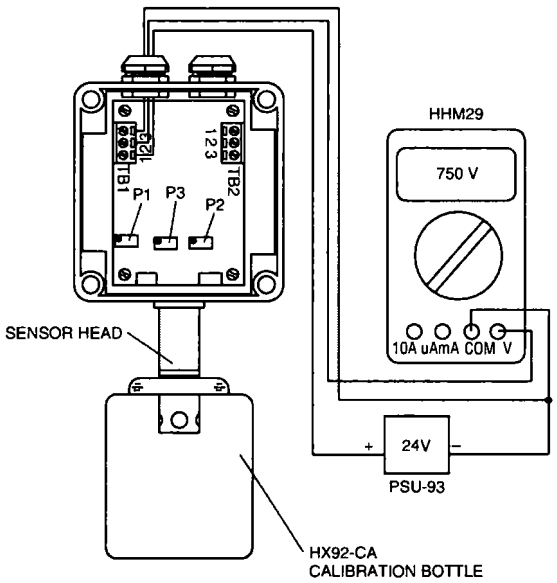

Figure 8 - HX93AV Calibration Procedure
Relative Humidity Adjustment

15. Calibration Procedure for HX93AV (all Styles)

Temperature Adjustment

Recommended equipment:

- 100 Ohm RTD Simulator OMEGA® Model No.: **CL510-1**
- Handheld Digital Multi-meter, OMEGA® Model No.: **HHM29**
- Dc Power Supply, OMEGA® Model No.: **PSU-93**

1. Remove enclosure cover
2. Connect the power supply and multimeter as shown in the figure below.
3. Disconnect the 2-wire Connector "J4" from the main Board.
4. Connect the RTD simulator to the "J4" header on the main board as shown below.
5. Apply power to transmitter and allow to warm up for 10 min.
6. Set the RTD simulator to the 0°F position.
7. Adjust potentiometer "P5" on the main board for a output reading of 0.023 Vdc
8. Set the RTD simulator to the 150°F position.
9. Adjust potentiometer "P4" for a output reading of 0.901 Vdc
10. Repeat steps 6, 7, 8 and 9 as necessary until proper readings are maintained.
11. Calibration complete.

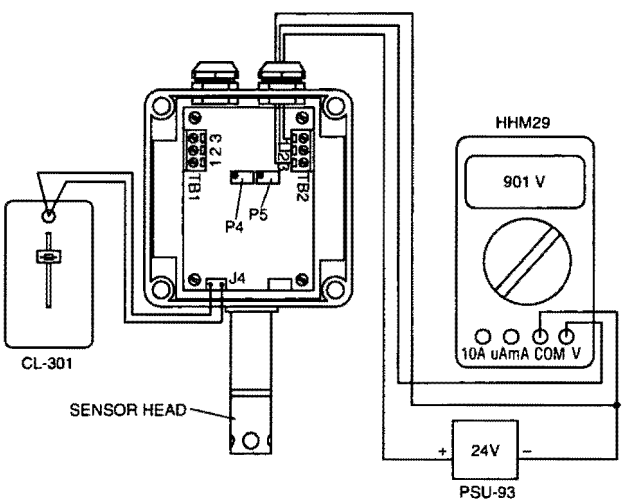

Figure 9 - HX93AV Calibration Procedure Temperature Adjustment

15A. Display Scaling for HX93DAC (all styles)

Your HX93DA transmitter comes with dual built-in LCD indicators for displaying both Humidity and Temperature. Before the meter adjustment or re-scaling can be done the transmitters current output should be checked as per the calibration procedure in Section 12 and 13 to verify the display will be adjusted correctly and match the analog output.

Relative Humidity Display Scaling

Recommended equipment:

- Humidity Calibration Kit, OMEGA® Model No.: **HX92-CAL**
- Handheld Digital Multi-meter, OMEGA® Model No.: **HHM29**
- Dc Power Supply, OMEGA® Model No.: **PSU-93**

1. Remove enclosure cover
2. Connect transmitter as shown in figure 6.
3. Apply power to transmitter and allow to warm up for 15 min.
4. Place unit in a 11% RH environment and allow to stabilize for 15 min.
5. Adjust potentiometer "ZERO" on the back of the RH display for a reading of 11.0%
6. Place unit in a 75% RH environment and allow to stabilize for 15 min.
7. Adjust potentiometer "GAIN" on the back of the RH display for a reading of 75.0%
8. Repeat steps 4, 5, 6, and 7 as necessary until proper readings are maintained.
9. Re-scaling complete.

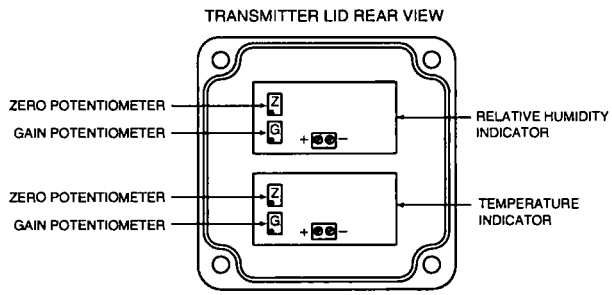

Figure 10 - Transmitter Lid Rear View

Temperature Display Scaling

Recommended equipment:

- RTD Simulator OMEGA® Model No.: **CL510-1**
- Handheld Digital Multi-meter, OMEGA® Model No.: **HHM29**
- Dc Power Supply, OMEGA® Model No.: **PSU-93**

For °F Display

1. Remove enclosure cover
2. Connect the power supply and multimeter as shown in the figure 7.
3. Disconnect the 2-wire Connector "J4" from the main Board.
4. Connect the RTD simulator to the "J4" header on the main board as shown below.
5. Apply power to transmitter and allow to warm up for 10 min.
6. Set the RTD simulator for 0°F output. (See figure on page 11.)
7. Adjust potentiometer "ZERO" on the back of the Temp display for a reading of 0.0°F
8. Set the RTD simulator for 150°F output.
9. Adjust potentiometer "GAIN" on the back of the RH display for a reading of 150.0°F
10. Repeat steps 6, 7, 8 and 9 as necessary until proper readings are maintained.
11. Calibration complete.

For °C Display

12. Remove enclosure cover
13. Connect the power supply and multimeter as shown in the figure 7.
14. Disconnect the 2-wire Connector "J4" from the main Board.
15. Connect the RTD simulator to the "J4" header on the main board as shown below.
16. Apply power to transmitter and allow to warm up for 10 min.
17. Set the RTD simulator for 0°C output. (See figure on page 11.)
18. Adjust potentiometer "ZERO" on the back of the Temp display for a reading of 0.0°C
19. Set the RTD simulator to the 150°C output.
20. Adjust potentiometer "GAIN" on the back of the RH display for a reading of 150.0°F
21. Repeat steps 6, 7, 8 and 9 as necessary until proper readings are maintained.

Calibration complete.

16. Maintenance

If your Humidity transmitter will be used in a dusty environment, the protective sensor filter, if clogged, may be removed for cleaning. Unscrew the protective cover and gently blow compressed air through the filter screen. A soft brush may also be used to remove dirt particles from the screen.

If the sensor is subjected to 100% condensation, it must be dried to obtain correct readings. There will be no permanent damage or calibration shift to the unit.

Units should not be exposed to high concentrations of ammonia or alcohol vapors.

17. Specifications

Relative Humidity

Measuring Range:	3 - 95% (non-condensing)
Accuracy:	±2.5% @ 72°F with an added temperature coefficient error of -.06% RH/°F (both increasing and decreasing in temperature).
Repeatability:	± 1 % RH
Operating Temperature Range:	-20 to 75°C (-4 to 167°F)
Output:	
Model: HX93AC	4 to 20 mA (Scaled for 0 to 100% RH)
Model : HX93AV	0 to 1 Vdc (Scaled for 0 to 100% RH)
Power:	6 –30 Vdc @ 20mA
Max Loop Resistance:	Ohms = (V supply – 6 V)/.02 A
RH Time Constant (90% response at 25°C, in moving air at 1m/s):	>10 seconds, 10 to 90% RH >15 seconds, 90 to 10% RH
Sensor Type:	Thin Film Polymer Capacitor

Temperature

Measuring Range:	-20 to 75°C (-4 to 167°F)
Accuracy:	± 0.6°C (1°F)
Repeatability:	± 0.3°C (0.5°F)
Output:	
Model: HX93AC	4 to 20 mA (Scaled for 0 to 100% RH)
Model : HX93AV	0 to 1 Vdc (Scaled for 0 to 100% RH)
Power:	
No Displays	6 -30 Vdc @ 20mA
With Displays	12 - 30 Vdc @ 30mA

Max Loop Resistance:	Ohms = (V supply – 6 V)/.02 A
Sensor Type:	100 Ohm Platinum RT

18. General Specifications

Enclosure Housing:	Gray Polycarbonate, (IP 65, DIN 40050) NEMA rated up to 13, UL Listed.
Connections	
Cable Strain Relief:	Nylon, Liquid-tight with neoprene gland for 2.29 to 6.73 mm (.09 to .265") diameter cable.
Wire Connections:	Internal 3-Position Terminal Strip. Accepts from 14 to 22 gage wire.
Dimensions:	See "Mounting" Section
Weight	
Wall Mount Model:	82 g. (3 oz)
Duct Mount Model:	100 g. (3.5 oz)

MADE IN USA WARRANTY/DISCLAIMER

OMEGA ENGINEERING, INC. warrants this unit to be free of defects in materials and workmanship for a period of **13 months** from date of purchase. OMEGA's Warranty adds an additional one (1) month grace period to the normal **one (1) year product warranty** to cover handling and shipping time. This ensures that OMEGA's customers receive maximum coverage on each product.

If the unit malfunctions, it must be returned to the factory for evaluation. OMEGA's Customer Service Department will issue an Authorized Return (AR) number immediately upon phone or written request. Upon examination by OMEGA, if the unit is found to be defective, it will be repaired or replaced at no charge. OMEGA's WARRANTY does not apply to defects resulting from any action of the purchaser, including but not limited to mishandling, improper interfacing, operation outside of design limits, improper repair, or unauthorized modification. This WARRANTY is VOID if the unit shows evidence of having been tampered with or shows evidence of having been damaged as a result of excessive corrosion; or current, heat, moisture or vibration; improper specification; misapplication; misuse or other operating conditions outside of OMEGA's control. Components which wear are not warranted, including but not limited to contact points, fuses, and triacs.

OMEGA is pleased to offer suggestions on the use of its various products. However, OMEGA neither assumes responsibility for any omissions or errors nor assumes liability for any damages that result from the use of its products in accordance with information provided by OMEGA, either verbal or written. OMEGA warrants only that the parts manufactured by it will be as specified and free of defects. OMEGA MAKES NO OTHER WARRANTIES OR REPRESENTATIONS OF ANY KIND WHATSOEVER, EXPRESS OR IMPLIED, EXCEPT THAT OF TITLE, AND ALL IMPLIED WARRANTIES INCLUDING ANY WARRANTY OF MERCHANTABILITY AND FITNESS FOR A PARTICULAR PURPOSE ARE HEREBY DISCLAIMED. LIMITATION OF LIABILITY: The remedies of purchaser set forth herein are exclusive, and the total liability of OMEGA with respect to this order, whether based on contract, warranty, negligence, indemnification, strict liability or otherwise, shall not exceed the purchase price of the component upon which liability is based. In no event shall OMEGA be liable for consequential, incidental or special damages.

CONDITIONS: Equipment sold by OMEGA is not intended to be used, nor shall it be used: (1) as a "Basic Component" under 10 CFR 21 (NRC), used in or with any nuclear installation or activity; or (2) in medical applications or used on humans. Should any Product(s) be used in or with any nuclear installation or activity, medical application, used on humans, or misused in any way, OMEGA assumes no responsibility as set forth in our basic WARRANTY/DISCLAIMER language, and, additionally, purchaser will indemnify OMEGA and hold OMEGA harmless from any liability or damage whatsoever arising out of the use of the Product(s) in such a manner.

RETURN REQUESTS/INQUIRIES

Direct all warranty and repair requests/inquiries to the OMEGA Customer Service Department. BEFORE RETURNING ANY PRODUCT(S) TO OMEGA, PURCHASER MUST OBTAIN AN AUTHORIZED RETURN (AR) NUMBER FROM OMEGA'S CUSTOMER SERVICE DEPARTMENT (IN ORDER TO AVOID PROCESSING DELAYS). The assigned AR number should then be marked on the outside of the return package and on any correspondence.

The purchaser is responsible for shipping charges, freight, insurance and proper packaging to prevent breakage in transit.

FOR **WARRANTY** RETURNS, please have the following information available BEFORE contacting OMEGA:

1. Purchase Order number under which the product was PURCHASED,
2. Model and serial number of the product under warranty, and
3. Repair instructions and/or specific problems relative to the product.

FOR **NON-WARRANTY** REPAIRS, consult OMEGA for current repair charges. Have the following information available BEFORE contacting OMEGA:

1. Purchase Order number to cover the COST of the repair,
2. Model and serial number of the product, and
3. Repair instructions and/or specific problems relative to the product.

OMEGA's policy is to make running changes, not model changes, whenever an improvement is possible. This affords our customers the latest in technology and engineering.

OMEGA is a registered trademark of OMEGA ENGINEERING, INC.

© Copyright 2003 OMEGA ENGINEERING, INC. All rights reserved. This document may not be copied, photocopied, reproduced, translated, or reduced to any electronic medium or machine-readable form, in whole or in part, without the prior written consent of OMEGA ENGINEERING, INC

Where Do I Find Everything I Need for Process Measurement and Control? OMEGA...Of Course!

Shop online at www.omega.com

TEMPERATURE

- Thermocouple, RTD & Thermistor Probes, Connectors, Panels & Assemblies
- Wire: Thermocouple, RTD & Thermistor
- Calibrators & Ice Point References
- Recorders, Controllers & Process Monitors
- Infrared Pyrometers

PRESSURE, STRAIN AND FORCE

- Transducers & Strain Gages
- Load Cells & Pressure Gages
- Displacement Transducers
- Instrumentation & Accessories

FLOW/LEVEL

- Rotameters, Gas Mass Flowmeters & Flow Computers
- Air Velocity Indicators
- Turbine/Paddlewheel Systems
- Totalizers & Batch Controllers

pH/CONDUCTIVITY

- pH Electrodes, Testers & Accessories
- Benchtop/Laboratory Meters
- Controllers, Calibrators, Simulators & Pumps
- Industrial pH & Conductivity Equipment

DATA ACQUISITION

- Data Acquisition & Engineering Software
- Communications-Based Acquisition Systems
- Plug-in Cards for Apple, IBM & Compatibles
- Datalogging Systems
- Recorders, Printers & Plotters

HEATERS

- Heating Cable
- Cartridge & Strip Heaters
- Immersion & Band Heaters
- Flexible Heaters
- Laboratory Heaters

ENVIRONMENTAL MONITORING AND CONTROL

- Metering & Control Instrumentation
- Refractometers
- Pumps & Tubing
- Air, Soil & Water Monitors
- Industrial Water & Wastewater Treatment
- pH, Conductivity & Dissolved Oxygen Instruments

M0933A/0703

Timers

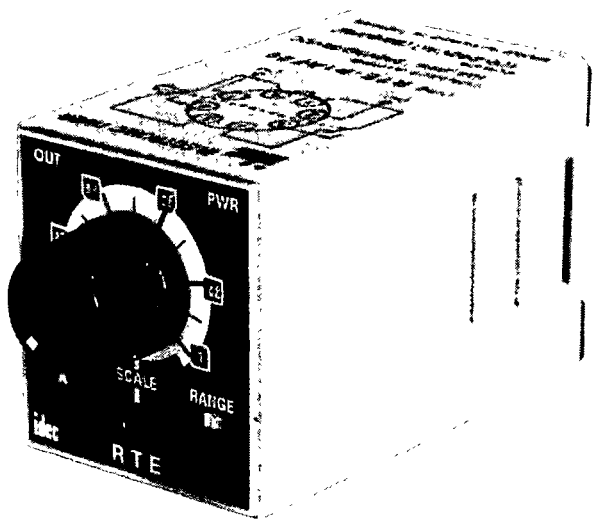

Selection Guide 792

RTE Series — Analog Timers 798
Accessories 803
Dimensions 804

GT3A Series — Analog Timers 805

GT3D — Digital Timers 813

GT3F Series — True OFF Delay Timers 826

GT3S (Star-Delta) Timers 831

GT3W Series — Dual Time Range Timers . 834

GT3 Series 838
Accessories 838
Dimensions 842

GE1A Series — ON Delay Timers 844
Accessories 846
Dimensions 847

GT5P Series — ON Delay Timers 848
Accessories 851
Dimensions 852

GT5Y Series — ON Delay Timers 853
Accessories 856
Dimensions 857

General Instructions for All Timer Series .. 858

IDEC

For more information on this product family, visit our website.
Additional resources include:

- New and updated product information
- Downloadable software demos & upgrades
- Part configuration tool & cross reference
- Online stock check & ordering
- IDEC field sales & distributor search
- Online literature request
- Downloadable manuals & CAD drawings
- Manufacturer's suggested retail price list
- Product training schedule & locations
- Advertising & trade show schedules
- Press releases & FAQs

www.idec.com/timer

Selection Guide

Selection Guide: RTE, GT3A, GT3D, and GT3F Series

Series Model	RTE	GT3A	GT3D	GT3F
Page	798	805	813	826
Appearance	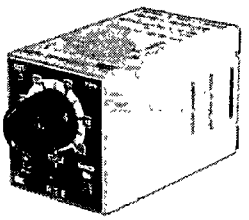		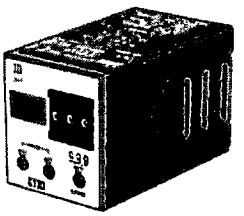	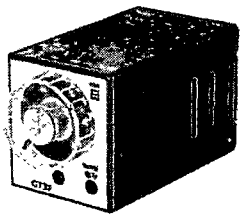
Mode of Operation	ON-delay Interval OFF-delay One-shot Cycle (ON first) Cycle (OFF first) Signal OFF delay Signal ON/OFF delay	ON-delay Interval OFF-delay One-shot Cycle (off first) Cycle (on first) Signal OFF delay Signal ON/OFF delay	ON-delay Interval One-shot One-shot ON delay Cycle Signal OFF delay Signal ON/OFF delay	True OFF-delay
Time Range	0.1 second to 600 hrs	0.1 second to 180 hrs	0.01 second to 99.9 hrs	0.1 to 600 seconds
Contact Configuration	DPDT	SPDT, DPDT	SPDT, DPDT	SPDT, DPDT
Repeat Accuracy	±0.25% maximum	±0.2% maximum	±0.3% maximum	±0.4% maximum
Contact Load Rating (resistive)	10A, 240V AC	SPDT: 3A, 250V AC DPDT: 5A, 240V AC	SPDT: 3A, 250V AC DPDT: 5A, 240V AC	5A, 250V AC
Available Operating Voltage	100-240V AC 12V DC 24V AC/DC	100 to 240V AC 12V DC 24V AC/DC	100 to 240V AC 24V AC/DC	100 to 240V AC 24V AC/DC
Approvals	UL Listed c-uL Listed TUV CE	UL Listed c-uL Listed CE	UL recognized TUV CSA CE	UL Listed c-uL Listed CE

1. For Timing Diagrams Overview, see page 794
2. For all series specific instructions, accessories, and dimensions, see the individual series section

Selection Guide

Selection Guide: RTE, GT3A, GT3D, and GT3F Series

Series Model	GT3S	GT3W	GE1A	GT5P	GT5Y
Page	831	834	844	848	853
Appearance	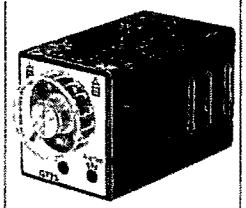	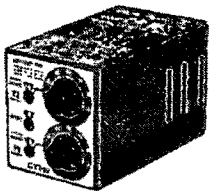	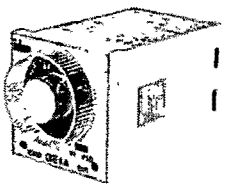	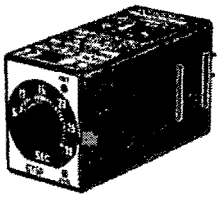	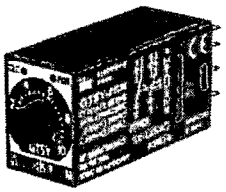
Mode of Operation	Star-Delta	Sequential start ON-delay Recycler and instantaneous Recycler OFF start Recycler ON start Interval Interval ON delay Sequential interval	ON-delay	ON-delay	ON-delay
Time Range	Star side 0.05s to 100s Star-delta Switching Time 0.05, 0.1, 0.25, 0.5 seconds	0.1s to 300 hrs	0.1s to 10 hrs	0.1s to 10 minutes	0.1s to 1 hour
Contact Configuration	SPST-NO	DPDT	SPDT, DPDT	SPDT	DPDT, 4PDT
Repeat Accuracy	±0.2% maximum	±0.2% maximum	±0.2% maximum	±0.2% maximum	±0.2% maximum
Contact Load Rating (resistive)	5A, 250V AC/30VDC	3A, 250V AC 5A, 120V AC/30V DC	5A, 240V AC	5A, 250V AC	5A, DPDT 250V AC 3A, 4PDT, 250V AC
Available Operating Voltage	100 to 240V AC	100 to 240V AC 12V DC 24V AC/DC	24V AC/DC 110 to 120V AC 220 to 240V AC	100 to 120V AC 200 to 240V AC 12V DC 24V DC	100 to 120V AC 200 to 240V AC 12V DC 24V DC 24V AC
Approvals	UL Listed c-uL Listed CE	UL Listed c-uL Listed CE	UL Listed c-uL Listed TUV CE	UL recognized TUV CSA CE	UL Listed c-uL Listed CE

1 For Timing Diagrams Overview, see page 794
2 For all series specific instructions, accessories, and dimensions, see the individual series section

Timing Diagrams Overview

Guide to Reading Timing Function Diagrams

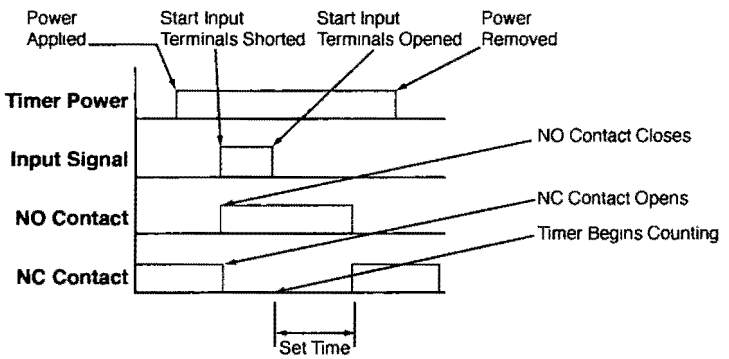

1 If power is disconnected during actual timing, most electronic timers reset to the preset time, ready for the re-application of supply voltage (except for GT3F "true OFF Delay")
2 NO = Normally open
3 NC = Normally closed

Timing Function Diagrams Overview

ON-Delay 1 (power start)

When voltage is applied to the coil, the relay contacts remain in the **off state** and the set time begins When the set time has elapsed, the relay contacts transfer to the **on state**. The contacts remain in the on state until the timer is reset The timer is reset by removing the coil voltage Applicable models: RTE-P(B)1, GT3A-1, -2, -3, GT3D-1, -2, -3, -4, and GE1A.

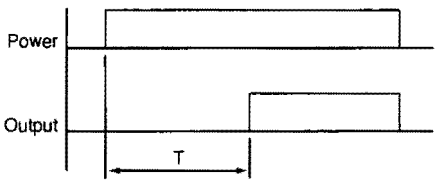

Type No.	GT3A-1, -2, -3	GT3D-1, -2, -3, -4	RTE-*1
Mode	A	1-A	A
See Page	805	813	798

Type No.	GE1A	GT5P	GT5Y
See Page	844	813	853

Interval 1 (power start)

When voltage is applied to the coil, the relay contacts transfer immediately to the **on state** and the set time begins. When the set time has elapsed, the relay contacts transfer to the **off state** The contacts remain in the **off state** until the timer is reset. The timer is reset by removing the coil voltage Applicable models RTE-P(B)1, GT3A-1, -2, -3, and GT3D-1, -2, -3, -4

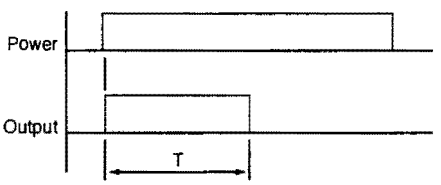

Type No.	GT3A-1, -2, -3	GT3D-1, -2, -3, -4	RTE-*1
Mode	B	1-B	B
See Page	805	813	798

ON-Delay 2 (signal start)

Voltage is applied to the coil at all times. When a start input is supplied, the relay contacts remain in the **off state** and the set time begins When the set time has elapsed, the relay contacts transfer to the **on state**. The contacts remain in the **on state** until the timer is reset The timer is reset by applying a reset input or by removing the coil voltage Applicable models GT3A-4, GT3D-4 and RTE-P(B) 2

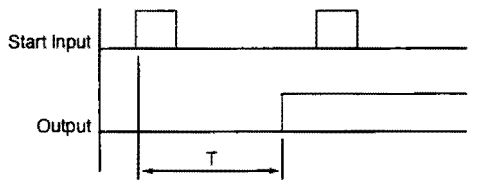

Type No.	GT3A-4	GT3D-4	RTE-*2
Mode	A	2-A	A
See Page	805	813	798

Interval 2 (signal start)

Voltage is applied to the coil at all times When a start signal is supplied, the relay contacts transfer immediately to the **on state** and the set time begins When the set time has elapsed, the relay contacts transfer to the **off state** The contacts remain in the **off state** until the timer is reset The timer is reset by applying a reset input or by removing the coil voltage. Applicable models: GT3A-5 and GT3D-4

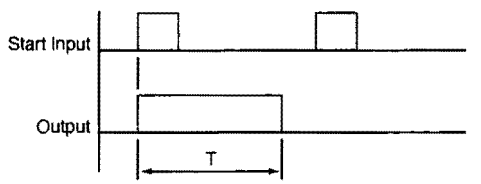

Type No.	GT3A-5	GT3D-4
Mode	A	2-E
See Page	805	813

1 T = set time, T' = shorter than set time, Ts = one shot output time
2 For more detailed timing diagrams, see specifications for individual timer models

Cycle 1 (power start, OFF first)

When voltage is applied to the coil, the contacts remain in the **off state** and the set time begins At the end of the set time, the contacts transfer to the **on state** and remain in the **on state** until the set time elapses. The timer cycles between the two states until power is removed from the coil Removing the coil voltage resets the timer. The set time for both the **on state** and the **off state** is the same. Applicable models GT3A-1, -2, -3, GT3D-1, -2, -3, -4 and RTE-P(B)1.

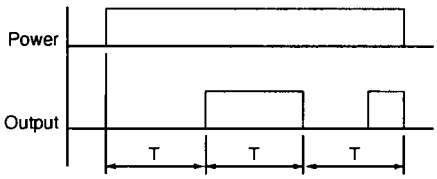

Type No.	GT3A-1, -2, -3	GT3D-1, -2, -3, -4	RTE-*1
Mode	C	1-C	C
See Page	805	813	798

Cycle 3 (power start, ON first)

When voltage is applied to the coil, the contacts immediately transfer to the **on state** and the set time begins. At the end of the set time, the contacts transfer to the **off state** and remain in the **off state** until the set time elapses. The timer cycles between the two states until power is removed from the coil Removing the coil voltage resets the timer The set time for both the **off state** and the **on state** is the same Applicable models GT3A-1, -2, -3, GT3D-1, -2, -3, -4 and RTE-P(B)1

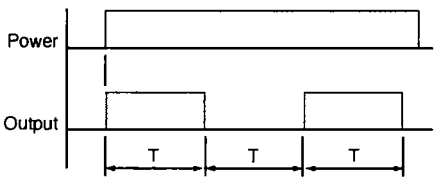

Type No.	GT3A-1, -2, -3	GT3D-1, -2, -3, -4	RTE-*1
Mode	D	1-D	D
See Page	805	813	798

One Shot 1 (signal start, retriggerable)

Voltage is applied to the coil at all times. When a start signal is supplied, the contacts immediately transfer to the **on state** and the set time begins. If another start signal is supplied **(before set time has elapsed)** the set time restarts, as the contacts remain in the **on state**. Successive pulses at a frequency greater than the set time will cause the contacts to remain in the "**On state**" indefinitely When the set time has elapsed the contacts transfer back to the **off state**. The contacts remain in the **off state** until the next start signal is supplied (no reset is necessary) The timer can be reset by application of a reset input or by removing coil voltage. Applicable models GT3A-6 and GT3D-4

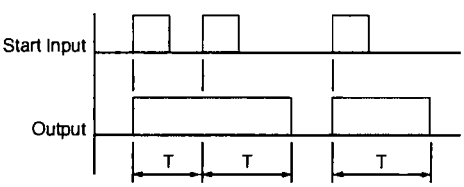

Type No.	GT3A-6	GT3D-4
Mode	A	3-C
See Page	805	813

Cycle 2 (signal start, OFF first)

Voltage is applied to the coil at all times When a start signal is supplied, the relay contacts remain in the **off state** and the set time begins. At the end of the set time, the contacts transfer to the **on state** and remain in the **on state** until the set time elapses The timer cycles between the two states until the timer is reset. The set time for both the **on state** and the **off state** are the same. The timer is reset by application of a reset input or by removing coil voltage Applicable models GT3A-4, GT3D-4 and RTE-P(B) 2.

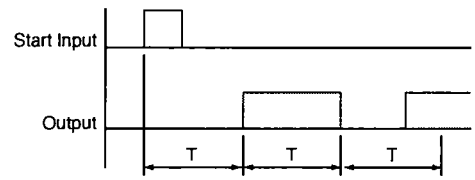

Type No.	GT3A-4	GT3D-4	RTE-*2
Mode	B	2-B	B
See Page	805	813	798

One Shot Cycle (signal start)

Voltage is applied to the coil at all times When a start signal is supplied, the contacts remain in the **off state** and the set time begins At the end of the set time, the contacts transfer to the **on state** and remain in the **on state** for the set time. After the set time has elapsed, the contacts return to the **off state** The contacts remain in the **off state** until the timer is reset. The timer is reset by application of a reset input or by removing coil voltage Applicable models GT3A-5 and GT3D-4

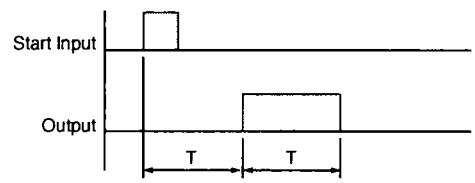

Type No.	GT3A-5	GT3D-4
Mode	B	2-F
See Page	805	813

One Shot 2 (signal start)

Voltage is applied to the coil at all times. When a start signal is supplied, the contacts immediately transfer to the **on state** and the set time begins. If another start signal is supplied **(before set time has elapsed)**, the set time will not be affected. When the set time has elapsed, the contacts transfer back to the **off state** The contacts remain in the **off state** until the next start signal is supplied (no reset is necessary) The timer can be reset by application of a reset input or by removing coil voltage. Applicable models GT3A-6, GT3D-4, and RTE-P(B)2.

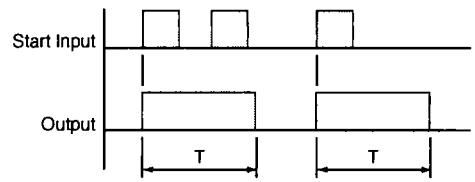

Type No.	GT3A-6	GT3D-4	RTE-*2
Mode	C	3-E	F
See Page	805	813	798

1 T = set time, T' = shorter than set time, Ts = one shot output time
2 For more detailed timing diagrams, see specifications for individual timer models

Signal ON/OFF-Delay 1

Voltage is supplied to the coil at all times When a maintained start signal is supplied, the contacts immediately transfer to the **on state** and the set time begins. When the set time has elapsed, the contacts transfer to the **off state** The contacts remain in the **off state** until the start signal is removed The contacts transfer back to the **on state** and remain in the **on state** for the set time. When the set time has elapsed, the contacts transfer to the **off state** and remain in the **off state** until the start signal is supplied again (no reset is necessary) The timer is reset by application of a reset input or by removing coil voltage Applicable models: GT3A-4, GT3D-4 and RTE-R(B)2.

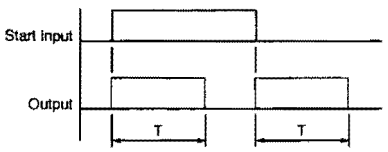

Type No.	GT3A-4	GT3D-4	RTE-*2
Mode	C	2-C	D
See Page	805	813	798

Signal ON/OFF-Delay 3

Voltage is supplied to the coil at all times. When a momentary start signal is supplied, the contacts remain in the **off state** and the set time begins When the set time has elapsed, the contacts transfer to the **on state** The contacts remain in the **on state** until another momentary input is supplied The contacts then remain in the **on state** for the set time. When the set time has elapsed, the contacts transfer to the **off state** and remain in the **off state** until the start signal is supplied again (no reset is necessary). The timer is reset by application of a reset input or by removing coil voltage Applicable models: GT3A-6 and GT3D-4

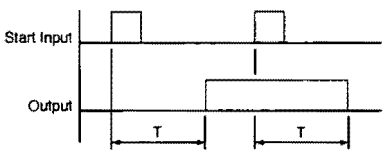

Type No.	GT3A-6	GT3D-4
Mode	D	3-F
See Page	805	813

One Shot ON-Delay (signal start)

When voltage is applied to the coil, the preset time is initiated and the contacts remain in the **off state** for the preset time. Following the preset time, the contacts transfer to the **on state**, and remain in the **on state** until the start input is supplied. Following the start input, the contacts transfer to the **off state** for the preset time. After the preset time has elapsed, the contacts transfer back to the **on state** and remain there until either the next start input is supplied or the timer is reset. The timer can be reset by either a reset input or removal of the coil voltage. Applicable models: GT3A-6 and GT3D-4.

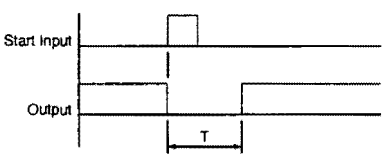

Type No.	GT3A-6	GT3D-4
Mode	B	3-D
See Page	805	813

Signal ON/OFF-Delay 2

Voltage is supplied to the coil at all times. When a maintained start signal is supplied, the contacts remain in the **off state** and the set time begins. When the set time has elapsed, the contacts transfer to the **on state** The contacts remain in the **on state** until the start signal is removed Once the start signal is removed, the contacts remain in the **on state** and the set time begins again. Once the set time has elapsed, the contacts transfer back to the **off state**. The timer is ready for the next start signal The timer is reset by the application of a reset signal or removal of power Applicable models: GT3A-5 and GT3D-4.

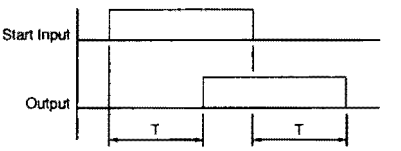

Type No.	GT3A-5	GT3D-4
Mode	C	3-A
See Page	805	813

Signal OFF-Delay 1

Voltage is applied to the coil at all times When a start signal is supplied, the contacts immediately transfer to the **on state**. The set time begins **when the start signal is removed** When the set time has elapsed, the contacts transfer to the **off state** The contacts remain in the **off state** until the next start signal is supplied (no reset is necessary) The timer can be reset by application of a reset input or by removing coil voltage Applicable models: RTE-P(B)2, GT3A-4, and GT3D-4.

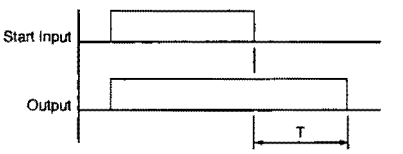

Type No.	GT3A-4	GT3D-4	RTE-*2
Mode	D	2-D	E
See Page	805	813	798

Signal OFF-Delay 2

Voltage is applied to the coil at all times When a maintained start signal is supplied, the contacts remain in the **off state**. When the "start signal is removed", the contacts transfer to the "**On state**" and the set time begins. When the set time has elapsed, the contacts transfer back to the **off state** They remain in the **off state** until the next start signal is supplied (no reset is necessary. The timer can be reset by application of a reset input or by removing coil voltage. Applicable models: GT3A-5 and GT3D-4

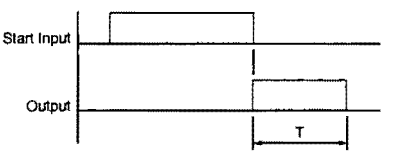

Type No.	GT3A-5	GT3D-4
Mode	D	3-B
See Page	805	813

1 T = set time, T' = shorter than set time, Ts = one shot output time
2 For more detailed timing diagrams, see specifications for individual timer models

ON-Delay One-Shot Output 1 (signal start)

Voltage is applied to the coil at all times. When a momentary start signal is supplied, the contacts remain in the off state and the preset time begins. Following the preset time, the contacts transfer to the on state and remain in the on state for the one-shot preset time. Following the one-shot preset time, the contacts transfer back to the off state and remain there until the timer is reset. The timer can be reset by applying either a reset input or removal of the coil voltage. Applicable model: GT3D-8

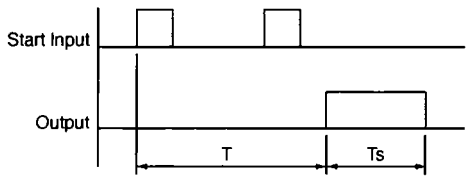

Type No.	GT3D-8
Mode	1
See Page	813

ON-Delay One-Shot Output 2 (signal start)

Voltage is applied to the coil at all times. When a maintained start signal is supplied, the contacts remain in the **off state** and the preset time begins. Following the preset time (start input is still present), the contacts transfer to the **on state** and remain in the **on state** for the one-shot preset time. When the one-shot preset time has elapsed, contacts transfer back to the **off state** and remain there until timer is reset. The timer can be reset by a reset input, removal of the coil voltage or removal of start input. Applicable model: GT3D-8

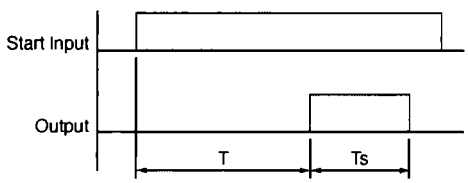

Type No.	GT3D-8
Mode	3
See Page	813

Sequential Start (power start)

When voltage is applied to the coil, both contacts remain in the OFF state and the set time, T1, begins. When T1 has elapsed, output 1 comes on and T2 begins. When T2 has elapsed, output 2 comes on. Both outputs remain on until power is removed from the coil. Applicable model: GT3W-A

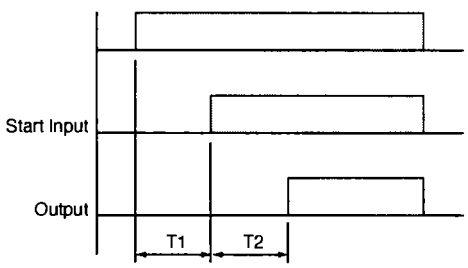

Type No.	GT3W-A
Mode	A
See Page	834

Cycle One-Shot Output (signal start)

Voltage is applied to the coil at all times. When a momentary start signal is supplied, the contacts remain in the **off state** and the preset time begins. Following the preset time, the contacts transfer to the **on state**. The contacts remain in the **on state** for the one-shot preset time. After the one-shot preset time has elapsed, the contacts transfer back to the **off state**. The contacts remain in the **off state** for the preset time minus the one-shot preset time. The timer cycles between **on and off states** until the timer is reset by a reset input or removal of the coil voltage. Applicable model: GT3D-8.

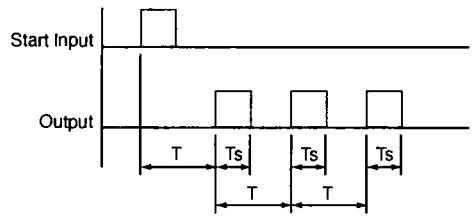

Type No.	GT3D-8
Mode	2
See Page	813

True Power-OFF Delay

When voltage is applied, output comes on immediately, when voltage is removed from the coil, the timer begins timing (internal capacitors power the timing circuit). When time has expired, contacts transfer back to the OFF state. If power is reapplied before the elapsed time has expired, the timing function will reset back to the starting point. Applicable models: GT3F-1, 2

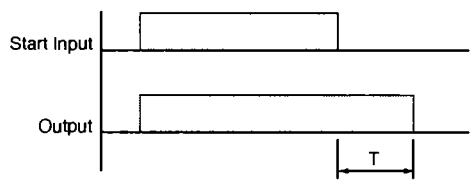

Type No.	GT3F-1, 2
Mode	Power OFF-Delay
See Page	826

Recycler Outputs (power start)

When voltage is applied to the coil, both contacts remain in the off state and time T1 begins. When T1 has elapsed, both contacts transfer to the ON state and T2 begins. When T2 has elapsed, both contacts transfer back to the OFF state and T1 begins again. The cycle continues until power is removed, at which time both contacts transfer back to the OFF state. Applicable model: GT3W-A

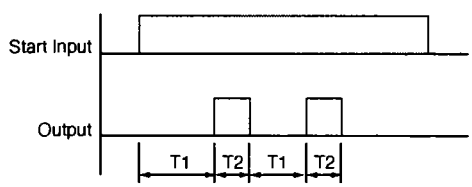

Type No.	GT3W-A
Mode	D
See Page	834

1 T = set time, T' = shorter than set time, Ts = one shot output time
2 For more detailed timing diagrams, see specifications for individual timer models

RTE Series — Analog Timers

Key features of the RTE series include:

- 20 time ranges and 10 timing functions
- Time delays up to 600 hours
- Space-saving package
- High repeat accuracy of ± 0.2%
- ON and timing OUT LED indicators
- Standard 8- or 11-pin and 11-blade termination
- 2 form C delayed output contacts
- 10A Contact Rating

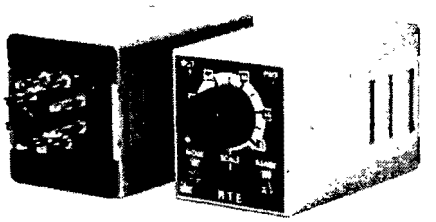

TÜV PRODUCT SERVICE Cert No E9950913332316 (EMC, RTE)
Cert No BL960813332355 (LVD, RTE)

c UL us UL Listed File No. E66043

CE

General Specifications

Operation System		Solid state CMOS Circuit
Operation Type		Multi-Mode
Time Range		0.1sec to 600 hours
Pollution Degree		2 (IE60664-1)
Over voltage category		III (IE60664-1)
Rated Operational Voltage	AF20	100-240V AC(50/60Hz)
	AD24	24V AC(50/60Hz)/24V DC
	D12	12V DC
Voltage Tolerance	AF20	85-264V AC(50/60Hz)
	AD24	20 4-26 4V AC(50/60Hz)/21.6-26 4V DC
	D12	10.8-13.2V DC
Input off Voltage		Rated Voltage x10% minimum
Ambient Operating Temperature		-20 to +65°C (without freezing)
Ambient Storage and Transport Temperature		-30 to +75°C (without freezing)
Relative Humidity		35 to 85%RH (without condensation)
Atmospheric Pressure		80kPa to 110kPa (Operating), 70kPa to 110kPa (Transport)
Reset Time		100msec maximum
Repeat Error		±0.2%, ±20msec*
Voltage Error		±0.2%, ±20msec*
Temperature Error		±0.5%, ±20msec*
Setting Error		±10% maximum
Insulation Resistance		100MΩ minimum (500V DC)
Dielectric Strength		Between power and output terminals 2000V AC, 1 minute Between contacts of different poles 2000V AC, 1 minute Between contacts of the same pole 1000V AC, 1 minute
Vibration Resistance		10 to 55Hz amplitude 0 5mm² hours in each of 3 axes Operating extremes. 98m/sec² (10G)
Shock Resistance		Damage limits. 490m/sec² (50G) 3 times in each of 3 axes
Degree of Protection		IP40 (enclosure) (IEC60529)

Power Consumption (Approx.)	TYPE		RTE-P1, -B1	RTE-P2, -B2
	AF20	120V AC/60Hz	6 5VA	6 6VA
		240V AC/60Hz	11 6VA	11 6VA
	24V AC 60Hz/DC		3 4VA/1 7W	3 5VA/1 7W
	D12		1 6W	1.6W

Mounting Position		Free
Dimensions	RTE-P1, P2	40Hx 36W x 77.9D mm
	RTE-B1, B2	40Hx 36W x 74 9D mm

Weight (Approx.)	RTE-P1	RTE-P2	RTE-B1, -B2
	87g	89g	85g

Contact Ratings

Contact Configuration		2 Form C, DPDT (Delay output)
Allowable Voltage / Allowable Current		240V AC, 30V DC / 10A
Maximum Permissible Operating Frequency		1800 cycles per hour
Rated Load	Resistive	10A 240V AC, 30V DC
	Inductive	7A 240V AC, 30V DC
	Horse Power Rating	1/6 HP 120V AC, 1/3 HP 240V AC
Life	Electrical	500,000 op. minimum (Resistive)
	Mechanical	50,000,000 op minimum

*For the value of the error against a preset time, whichever the largest applies.

Part Numbering Guide

RTE series part numbers are composed of 4 part number codes When ordering a RTE series part, select one code from each category
Example **RTE-P1AF20**

RTE	–	P	1	AF20
① Series		② Terminal Style	③ Function Group	④ Input Voltage

Part Numbers: RTE Series

	Description	Part Number Code	Remarks
① Series	RTE series	RTE	For internal circuits, see next page.
② Terminal Style	Pin	P	Select one only
	Blade	B	
③ Function Group	ON-delay, interval, cycle OFF, cycle ON	1	Each function group has different timing functions.
	ON-delay, cycle OFF, cycle ON, signal ON/OFF delay, OFF-delay, one-shot	2	See page 794
④ Input Voltage	100 to 240V AC(50/60Hz)	AF20	
	24V AC(50/60Hz)/24V DC	AD24	
	12V DC	D12	

Part Numbers

Voltage	Power Triggered		Start Input Triggered	
	8-Pin	Blade	11-Pin	Blade
12V DC	RTE-P1D12	RTE-B1D12	RTE-P2D12	RTE-B2D12
24V AC/DC	RTE-P1AD24	RTE-B1AD24	RTE-P2AD24	RTE-B2AD24
100-240V AC	RTE-P1AF20	RTE-B1AF20	RTE-P2AF20	RTE-B2AF20

Time Range Determined by Time Range Selector and Dial Selector

	Dial	0 - 1	0 - 3	0 - 10	0 - 30	0 - 60
Range	Second	0 1 sec - 1 sec	0 1 sec - 3 sec	0 2 sec - 10 sec	0 6 sec - 30 sec	1 2 sec - 60 sec
	Minute	1.2 sec - 1 min	3.6 sec - 3 min	12 sec - 10 min	36 sec - 30 min	1.2 min - 60 min
	Hour	1 2 min - 1 hr	3 6 min - 3 hr	12 min - 10 hr	36 min - 30 hr	1 2 hr - 60 hr
	10 Hours	12 min - 10 hr	36 min - 30 hr	2 hr - 100 hr	6 hr - 300 hr	12 hr - 600 hr

Timing Diagrams

RTE-P1, -B1

RTE-P1

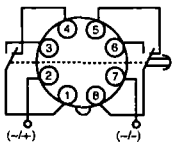

RTE-B1

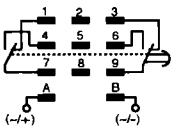

1 RTE-B1 Do not apply voltage to terminals #2, #5 & #8
2 IDEC sockets are as follows RTE-P1 SR2P-06* pin type socket, RTE-B1 SR3B-05* blade type socket, (*-may be followed by suffix letter A,B,C or U)

A ON-Delay 1 (power start)
Set timer for desired delay, apply power to coil Contacts transfer after preset time has elapsed, and remain in transferred position until timer is reset Reset occurs with removal of power

Item	Terminal Number		Operation
Power	(1) 2 - 7 (2) A - B		
Delayed Contact	(1) 1 - 4, 5 - 8 (2) 1 - 7, 3 - 9	(NC)	
	(1) 1 - 3, 6 - 8 (2) 4 - 7, 6 - 9	(NO)	
Indicator	PWR		
	OUT		
Set Time			T

B. Interval (power start)
Set timer for desired delay, apply power to coil Contacts transfer immediately, and return to original position after preset time has elapsed Reset occurs with removal of power

Item	Terminal Number		Operation
Power	(1) 2 - 7 (2) A - B		
Delayed Contact	(1) 1 - 4, 5 - 8 (2) 1 - 7, 3 - 9	(NC)	
	(1) 1 - 3, 6 - 8 (2) 4 - 7, 6 - 9	(NO)	
Indicator	PWR		
	OUT		
Set Time			T

C Cycle 1 (power start, OFF first)
Set timer for desired delay, apply power to coil. First transfer of contacts occurs after preset delay has elapsed, after the next elapse of preset delay contacts return to original position The timer now cycles between on and off as long as power is applied (duty ratio 1 1)

Item	Terminal Number		Operation
Power	(1) 2 - 7 (2) A - B		
Delayed Contact	(1) 1 - 4, 5 - 8 (2) 1 - 7, 3 - 9	(NC)	
	(1) 1 - 3, 6 - 8 (2) 4 - 7, 6 - 9	(NO)	
Indicator	PWR		
	OUT		
Set Time			T T

C· Cycle 3 (power start, ON first)
Functions in same manner as Mode C, with the exception that first transfer of contacts occurs as soon as power is applies The ratio is 1 1 Time On = Time Off

Item	Terminal Number		Operation
Power	(1) 2 - 7 (2) A - B		
Delayed Contact	(1) 1 - 4, 5 - 8 (2) 1 - 7, 3 - 9	(NC)	
	(1) 1 - 3, 6 - 8 (2) 4 - 7, 6 - 9	(NO)	
Indicator	PWR		
	OUT		
Set Time			T T

Timing Diagrams con't

RTE-P2, -B2

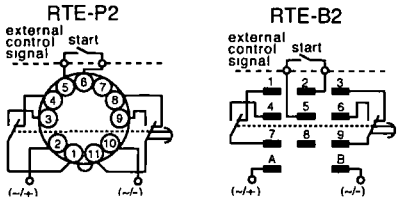

1 RTE-P2 Do not apply voltage to terminals #5, #6 & #7
2 RTE-B2 Do not apply voltage to terminals #2, #5 & #8
3 IDEC sockets are as follows RTE-P2 SR3P-05* pin type socket, RTE-B2 SR3B-05* blade type socket, (*-may be followed by suffix letter A,B,C or U)

A ON-Delay 2 (signal start)
When a preset time has elapsed after the start input turned on while power is on, the NO output contact goes on

Item	Terminal Number		Operation
Power	(A) 2 - 10 (B) A - B		
Start	(A) 5 - 6 (B) 2 5		
Delayed Contact	(A) 1 - 4, 8 - 11 (B) 1 - 7 3 - 9	(NC)	
	(A) 1 - 3 9 - 11 (B) 4 - 7 6 - 9	(NO)	
Indicator	PWR		
	OUT		
Set Time			T

B Cycle 2 (signal start, OFF first)
When the start input turns on while power is on, the output oscillates at a preset cycle (duty ratio 1 1), starting while the NO contact off

Item	Terminal Number		Operation
Power	(A) 2 - 10 (B) A B		
Start	(A) 5 - 6 (B) 2 - 5		
Delayed Contact	(A) 1 - 4, 8 - 11 (B) 1 - 7, 3 9	(NC)	
	(A) 1 - 3 9 - 11 (B) 4 - 7 6 - 9	(NO)	
Indicator	PWR		
	OUT		
Set Time			T T T T T T T T T Te

C Cycle 4 (signal start, ON first)
When the start input turns on while power is on, the NO contact goes on. The output oscillates at a preset cycle (duty ratio 1:1)

Item	Terminal Number		Operation
Power	(A) 2 - 10 (B) A - B		
Start	(A) 5 6 (B) 2 - 5		
Delayed Contact	(A) 1 - 4, 8 - 11 (B) 1 7 3 - 9	(NC)	
	(A) 1 - 3 9 - 11 (B) 4 - 7 6 9	(NO)	
Indicator	PWR		
	OUT		
Set Time			T T T T T T T T Te

D Signal ON/OFF-Delay
When the start input turns on while power is on, the NO output contact goes on When a preset time has elapsed while the start input remains on, the output contact goes off When the start input turns off, the NO contact goes on again When a preset time has elapsed after the start input turned off, the NO contact goes off

Item	Terminal Number		Operation
Power	(A) 2 - 10 (B) A - B		
Start	(A) 5 - 6 (B) 2 5		
Delayed Contact	(A) 1 - 4 8 - 11 (B) 1 - 7, 3 - 9	(NC)	
	(A) 1 - 3 9 11 (B) 4 - 7 6 - 9	(NO)	
Indicator	PWR		
	OUT		
Set Time			T T Te T T Te

E Signal OFF-Delay
When power is turned on while the start input is on, the NO output contact goes on When a preset time has elapsed after the start input turned off, the NO output contact goes off

Item	Terminal Number		Operation
Power	(A) 2 10 (B) A B		
Start	(A) 5 - 6 (B) 2 - 5		
Delayed Contact	(A) 1 - 4, 8 - 11 (B) 1 - 7 3 - 9	(NC)	
	(A) 1 - 3, 9 - 11 (B) 4 7, 6 9	(NO)	
Indicator	PWR		
	OUT		
Set Time			T Te T Te

F One-Shot (signal start)
When the start input turns on while power is on, the NO output contact goes on When a preset time has elapsed, the NO output contact goes off

Item	Terminal Number		Operation
Power	(A) 2 - 10 (B) A B		
Start	(A) 5 6 (B) 2 - 5		
Delayed Contact	(A) 1 - 4, 8 11 (B) 1 7, 3 9	(NC)	
	(A) 1 3, 9 - 11 (B) 4 - 7, 6 9	(NO)	
Indicator	PWR		
	OUT		
Set Time			

Temperature Derating Curves

Instructions

Installation of Hold-Down Springs DIN Rail Mount Socket

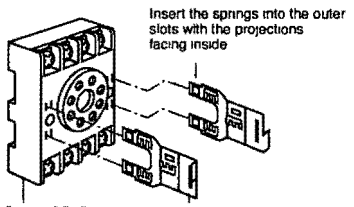

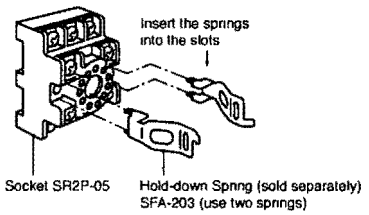

Switch Settings

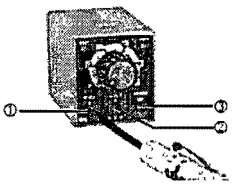

①Operator Mode Selector
②Scale Selector
③Time Range Selector

1 Turn the selectors securely using a flat screwdriver 4mm wide (maximum).
Note that incorrect setting may cause malfunction Do not turn the selectors beyond their limits

2 Since changing the setting during timer operation may cause malfunction, turn power off before changing

Safety Precautions

Special expertise is required to use Electronic Timers.

- All Electronic Timers are manufactured under IDEC's rigorous quality control system, but users must add a backup or fail safe provision to the control system when using the Electronic Timer in applications where heavy damage or personal injury may occur should the Electronic Timer fail.
- Install the Electronic Timer according to instructions described in this catalog
- Make sure that the operating conditions are as described in the specifications If you are uncertain about the specifications, contact IDEC in advance
- In these directions, safety precautions are categorized in order of importance under Warning and Caution.

Warnings

Warning notices are used to emphasize that improper operation may cause severe personal injury or death.

- Turn power off to the Electronic timer before starting installation, removal, wiring, maintenance, and inspection on the Electronic Timer
- Failure to turn power off may cause electrical shocks or fire hazard
- Do not use the Electronic Timer for an **emergency stop circuit** or **interlocking circuit**. If the Electronic Timer should fail, a machine malfunction, breakdown, or accident may occur.

Caution

Caution notices are used where inattention might cause personal injury or damage to equipment

- The Electronic Timer is designed for installation in equipment Do not install the Electronic Timer outside equipment
- Install the Electronic Timer in environments described in the specifications. If the Electronic Timer is used in places where it will be subjected to high-temperature, high-humidity, condensation, corrosive gases, excessive vibrations, or excessive shocks, then electrical shocks, fire hazard, or malfunction could result
- Use an IEC60127-approved fuse and circuit breaker on the power and output line outside the Electronic Timer.
- Do not disassemble, repair, or modify the Electronic Timer.
- When disposing of the Electronic Timer, do so as industrial waste.

Accessories

DIN Rail Mounting Accessories

DIN Rail/Surface Mount Sockets and Hold-Down Springs

DIN Rail Mount Socket				Applicable Hold-Down Springs	
Style	Appearance	Use with Timers	Part Number	Appearance	Part Number
11-Pin Screw Terminal (dual tier)		RTE-P2	SR3P-05		SFA-203
11-Pin FingerSafe Socket		RTE-P2	SR3P-05C		
8-Pin Screw Terminal		RTE-P1	SR2P-06		SFA-202
8-Pin Fingersafe Socket	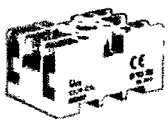		SR2P-05C		
11-Blade Screw Terminal		RTE-B1 RTE-B2	SR3B-05		
DIN Mounting Rail Length 1000mm		—	BNDN1000		

Panel Mounting Accessories

Flush Panel Mount Adapter and Sockets that use an Adapter

Accessory	Description	Appearance	Use with	Part No.
Panel Mount Adapter	Adaptor for flush panel mounting RTE timers		All RTE timers	RTB-G01
Sockets for use with Panel Mount Adapter	8-pin screw terminal	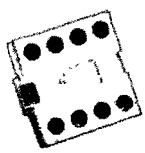 (Shown: SR6P-M08G Wiring Socket Adapter)	RTE-P1	SR6P-M08G
	11-pin screw terminal		RTE-P2	SR6P-M11G
	8-pin solder terminal		RTE-P1	SR6P-S08
	11-pin solder terminal	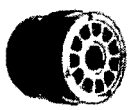	RTE-P2	SR6P-S11

Dimensions

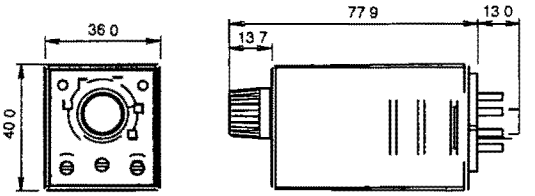

RTE-P1 (8 pin) Terminal Style

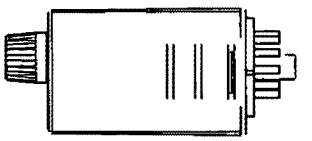

RTE-P2 (11 pin)Terminal Style

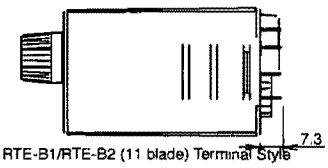

RTE-B1/RTE-B2 (11 blade) Terminal Style

Panel Mount Adapter

RTE Timer, 8-Pin and 11-Pin with SR6P-S08 or SR6P-S11

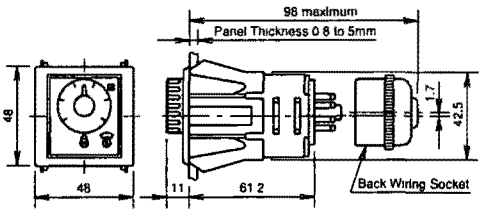

RTE Timer, 8-Pin with SR6P-M08G

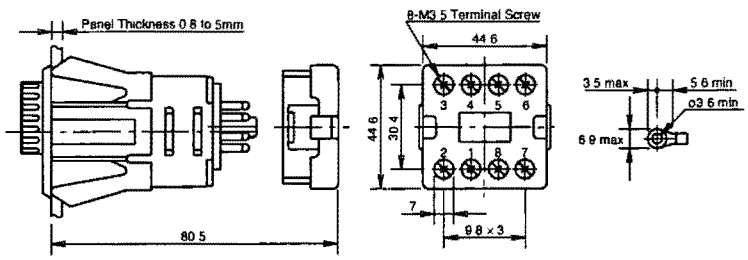

RTE Timer, 11-Pin with SR6P-M11G

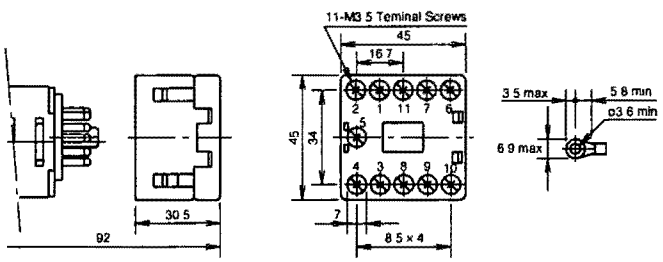

General Instructions for All Timer Series

Load Current

With inductive, capacitive, and incandescent lamp loads, inrush current more than 10 times the rated current may cause welded contacts and other undesired effects The inrush current and steady-state current must be taken into consideration when specifying a timer

Contact Protection

Switching an inductive load generates a counter-electromotive force (back EMF) in the coil. The back EMF will cause arcing, which may shorten the contact life and cause imperfect contact Application of a protection circuit is recommended to safeguard the contacts

Temperature and Humidity

Use the timer within the operating temperature and operating humidity ranges and prevent freezing or condensation After the timer has been stored below its operating temperature, leave the timer at room temperature for a sufficient period of time to allow it to return to operating temperatures before use.

Environment

Avoid contact between the timer and sulfurous or ammonia gases, organic solvents (alcohol, benzine, thinner, etc.), strong alkaline substances, or strong acids Do not use the timer in an environment where such substances are prevalent. Do not allow water to run or splash on the timer

Vibration and Shock

Excessive vibration or shocks can cause the output contacts to bounce, the timer should be used only within the operating extremes for vibration and shock resistance. In applications with significant vibration or shock, use of hold down springs or clips is recommended to secure a timer to its socket

Time Setting

The time range is calibrated at its maximum time scale; so it is desirable to use the timer at a setting as close to its maximum time scale as possible For a more accurate time delay, adjust the control knob by measuring the operating time with a watch before application.

Input Contacts

Use mechanical contact switch or relay to supply power to the timer When driving the timer with a solid-state output device (such as a two-wire proximity switch, photoelectric switch, or solid-state relay), malfunction may be caused by leakage current from the solid-state device Since AC types comprise a capacitive load, the SSR dielectric strength should be two or more times the power voltage when switching the timer power using an SSR.

Generally, it is desirable to use mechanical contacts whenever possible to apply power to a timer or its signal inputs. When using solid state devices, be cautious of inrushes and back-EMF that may exceed the ratings on such devices Some timers are specially designed so that signal inputs switch at a lower voltage than is used to power the timer (models designated as "B" type)

Timing Accuracy Formulas

Timing accuracies are calculated from the following formulas:

Repeat Error

$$= \pm \frac{1 \times \text{Maximum Measured Value} - \text{Minimum Measured Value} \times 100\%}{2 \text{ Maximum Scale Value}}$$

Voltage Error

$$= \pm \frac{Tv - Tr \times 100\%}{Tr}$$

Tv: Average of measured values at voltage V
Tr: Average of measured values at the rated voltage

Temperature Error

$$= \pm \frac{Tt - T20 \times 100\%}{T20}$$

Tt: Average of measured values at °C
T20: Average of measured values at 20°C

Setting Error

$$= \pm \frac{\text{Average of Measured Values} - \text{Set Value} \times 100\%}{\text{Maximum Scale Value}}$$

INTERNAL CONNECTIONS

DELAY ON MAKE

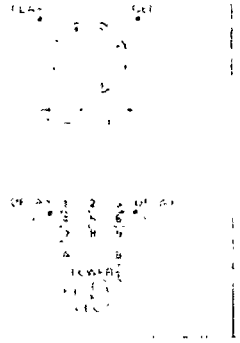

INTERVAL

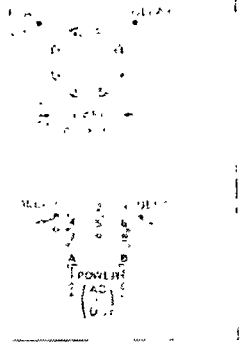

DELAY ON BREAK SINGLE SHOT

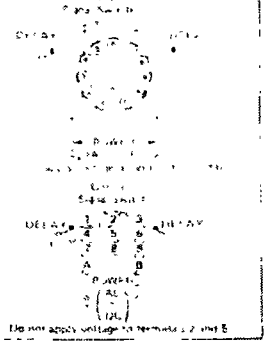

OPERATIONAL CHARTS

DELAY ON MAKE (RTE-P1, RTE B1)

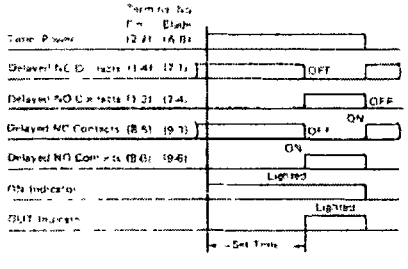

INTERVAL (RTE-P1, RTE B1)

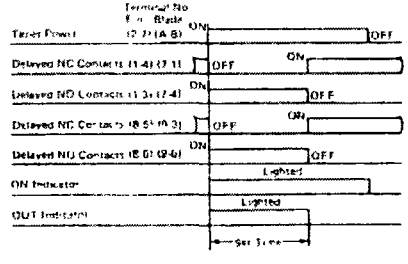

DELAY ON BREAK (RTE-P2, RTE B2)

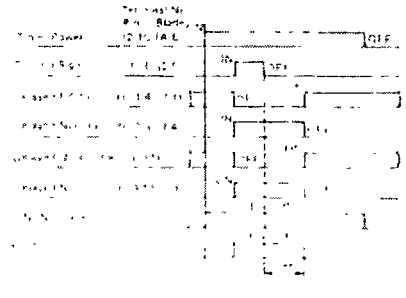

SINGLE SHOT (RTE-P2, RTE-B2)

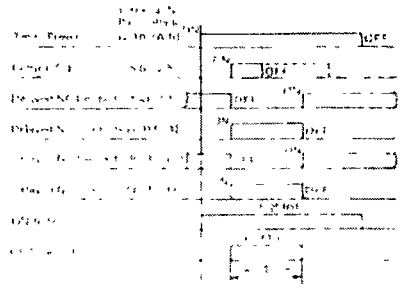

idec

TIME RANGE PROGRAMMING INSTRUCTIONS

The RTE series Electronic Timers are available in two operation mode groups and two time range groups. Determine the operation mode group and time range group of your timer from the Type No. Development.

1. Removing The Face Plate

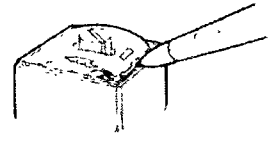

TYPE NO. DEVELOPMENT

RTE-P11-AC120V

- P: Pin / B. Blade
- Power Voltage
- Operation Mode Group — 1: Interval or Delay On Make; 2: Single Shot or Delay On Break
- Time Range Group — 1: 1 sec to 10 min; 2: 1 min to 10 hr

2. Selecting The Mode of Operation

Select the operation mode by moving the DIP switch to the right or left position. (After installing the face plate, the knob set to the left position is visible through the face plate window.)

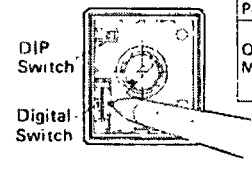

DIP Switch Position		Left	Right
Operation Mode Group	1	Interval	Delay On Make
	2	Single Shot	Delay On Break

3. Selecting The Time Range

Select the time range by rotating the digital switch.

Digital Switch Position		0	1	2	3	4	5	6	7
Time Range Group	1	1 sec	3 sec	6 sec	10 sec	60 sec	30 sec	5 min	10 min
	2	1 min	3 min	6 min	10 min	60 min	30 min	5 hr	10 hr

NOTE: When the digital switch is at position 8 or 9, the time range setting is the same as at position 0 or 1, respectively.

4. Setting The Face Plate

Each timer is provided with a face plate indicating the time range on both sides in different colors per time range group. The dial disk has four notches on its perimeter at every 90 degrees. Choose the top or bottom side containing your required time range and turn the dial disk to the position where the required time range figure and unit appear in the windows.

Time Range					Face Plate Color
Group 1	3 sec	6 sec	30 sec	60 sec	Yellow
	1 sec	10 sec	5 min	10 min	Pink
Group 2	3 min	6 min	30 min	60 min	Violet
	1 min	10 min	5 hr	10 hr	Blue

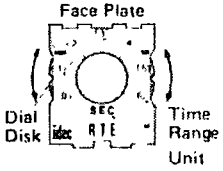

5. Installing The Face Plate

When the operation mode and time range settings are complete, place the face plate onto the timer by inserting the top edge into the top slots. Bend the face plate slightly and insert the bottom edge into the bottom slot on the timer. Make sure the dial disk notch is retained in place.

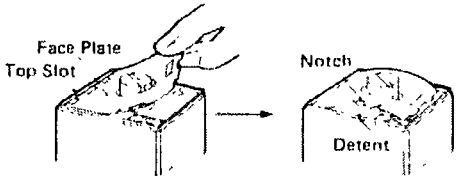

Small Size – Alloys

Rugged Durability, With Broad Heat and Pressure Capabilities, are Hallmarks of These Compact Switches

Ideal for shallow tanks or restricted spaces, or for low-cost, high volume use.

LS-1700 Series – Buna N Float

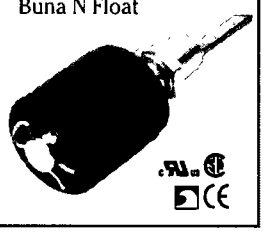

LS-1700 Series – Teflon® Float

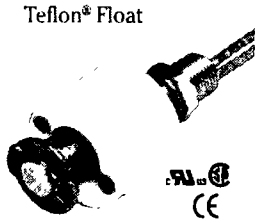

LS-1750 Series – All Stainless Steel

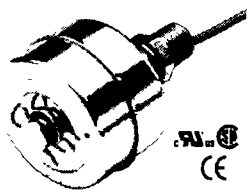

LS-1755 Series – All Stainless Steel

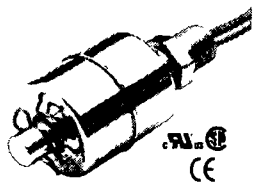

Offer broad chemical compatibility for general purpose use. Also ideal for oils and water.

Rugged construction suitable for most corrosive liquids, and for high temperatures and pressures. Stainless steel is generally recognized as safe (GRAS) with FDA for food contact regulations.

Dimensions

LS-1700 Series		LS-1750 Series	LS-1755 Series
Buna N Float	Teflon® Float	Stainless Steel Float and Stem	
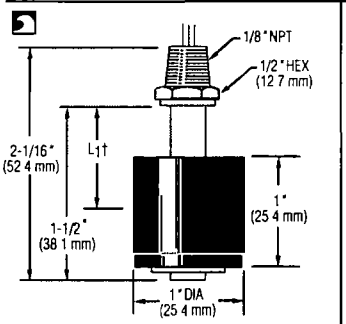	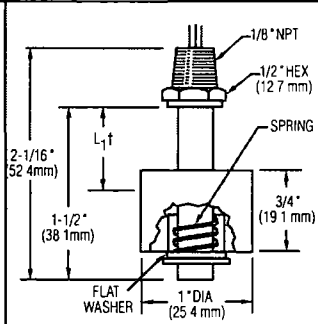	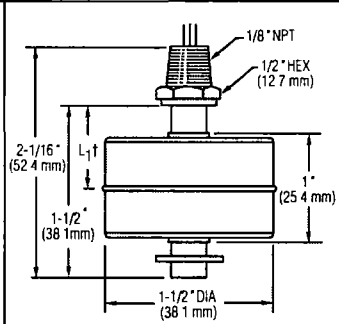	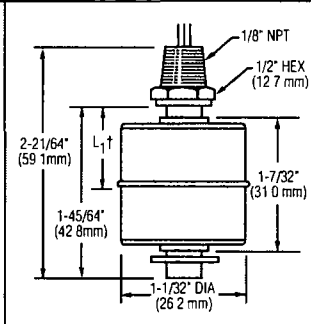
L_1 = 9/16" (14.2 mm) N.O., 13/16" (20.6 mm) N.C.	L_1 = 1/2" (12.7 mm) N.O. and N.C.	L_1 = 5/8" (15.7 mm) N.O., 3/4" (19.1 mm) N.C.	L_1 = 37/64" (14.5 mm) N.O., 53/64" (20.8 mm) N.C.

†L_1 = Switch actuation level, nominal (based on a liquid specific gravity of 1.0).

Common Specifications

Electrical Termination: No. 22 AWG, 24" L., Polymeric Lead Wires, (except Part No. 79990 which has Teflon® Lead Wires).

Approvals: Series Nos. LS-1700, LS-1750 and LS-1755 are U.L. Recognized – File No. E45168 and CSA Listed – File No. 30200.

Switch Operation: Units are shipped N.O. unless otherwise specified. Selectable, N.O. or N.C., by inverting float on unit stem (except for LS-1700 Series switches with Teflon® Floats; see selection in "How to Order" table).

How To Order – Select Part Number based on specifications required.

	Material							
Series Number	**Stem and Mounting**	**Float**	**Other Wetted**	**Min. Liquid Sp. Gr.**	**Operating Temperature**	**Pressure, PSI, Max.****	**Switch* SPST**	**Part Number**
LS-1700	Brass	Buna N	316 S.S., Epoxy	.45	Water: to 180°F (82.2°C) Oil: -40°F to +300°F (-40°C to +149°C)	300	20 VA	**01701**
	316 S.S.						20 VA	**01702**
	316 S.S	Teflon®		85	-40°F to +250°F (-40°C to +121.1°C)	1000	20 VA, N.O	**26791**
							20 VA, N.C	**27980**
LS-1750	316 S.S	316 S.S	316 S.S.	.70	-40°F to +300°F (-40°C to +148.9°C)	100	20 VA	**01750**
					-40°F to +480°F (-40°C to +204.4°C)		20 VA	**79990**
LS-1755	316 S.S	316 S.S	316 S.S	.90	-40°F to +300°F (-40°C to +148.9°C)	275	20 VA	**01755**

* See "Electrical Data" on Page X-5 for more information.
** Higher pressures are temperature dependent

SPEC SERVICES

SPECIFICATION FORMS FOR PROCESS MEASURMENT AND CONTROL INSTRUMENTS, PRIMARY ELEMENTS AND CONTROL VALVES

PROJECT: GROUNDWATER TREATMENT PLANT
CUSTOMER: W. A. RASIC CONSTRUCTION
CUSTOMER JOB NO.:
PLANT:
LOCATION:

RESISTANCE TEMPERATURE SENSORS AND THERMOWELLS

NO.	BY	DATE	REVISION
A	EIS	7/22/2008	FOR APPROVAL

SHEET 3 OF 3
SPEC NO. REV.
CONTRACT DATE
REQ. P.O.
BY CHK'D APPR.

1. Complete Assembly [X] Other

HEAD

2. Screwed Cover [ ] Other MFR STD
3. Explosion Proof [ ] Class
4. Material standard Conduit Connection 1/2 inch
5. Nipple Size Dim " N " Union [ ]

ELEMENT

6. Platinum [X] Nickel [ ] Other
7. Ice Point Resistance 100 ohm
8. Temperature Range
9. Leads: STD [ ] Potted [ ] Herm. Sealed [ ]
10. Sheath Material 316 SS O.D. 0.25"

11. Mounting Thread 1/2 - 14 ANPT
12. Conection: 2-Wire [ ] 3-Wire [X] 4-Wire [ ]
Lead Wires [X] Receptacle [ ] Bayonet Lock [ ]
Other SINGLE SENSOR (SPRING LOADED TYPE)

WELL OR TUBE

13. Material 316 SS
14. Construction: Tapered [X] Straight [ ]
Drilled [X] Built-Up [ ] Closed-End [ ]
15. Dim: MFR STD [X] O.D Tube I.D. 0.260"
16. Internal Thread 1/2 - 14 ANPT
17. Process Connection 1 - 11.5 ANPT
18 UNION TYPE EXTENTION " N " =

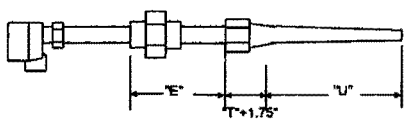

REV.	TAG NO.	Process Connection	WELL DIMENS. "U"	WELL DIMENS. "T"	ELEMENT LENGTH	SINGLE or DUAL	SERVICE	NOTES
A	TE-242	1" - 11.5 ANPT	2 5"	0		DUAL	VGAC NO. 1 & 2 GAS OUTLET	1

NOTES
** VENDOR TO CONFIRM MODEL NO.
1. ROSEMOUNT MODEL No.:0078P25C30A026T28
2. VENDOR SHALL ATTACHED A STAINLESS STEEL NAMEPLATE, STAMPED WITH INSTRUMENT TAG NO.

Product Data Sheet
00813-0100-4021, Rev HA
March 2008

Rosemount 3144P Temperature Transmitter

- *Sensor Drift Alert and Hot Backup® features improve measurement reliability while the Transmitter-Sensor Matching feature improves temperature measurement accuracy*
- *Statistical Process Monitoring (SPM) and Thermocouple Diagnostics provide improved visibility into process conditions and sensor loops.*
- *Communicate using either 4-20 mA/HART® or FOUNDATION™ fieldbus protocol*
- *The integral LCD Display (optional) conveniently displays sensor values and transmitter diagnostics information*
- *Capable of single-sensor and dual-sensor inputs. Differential and average temperature measurement increases system flexibility*
- *Dual-compartment housing provides the highest reliability in harsh industrial environments*
- *Safety certified to IEC 61508*

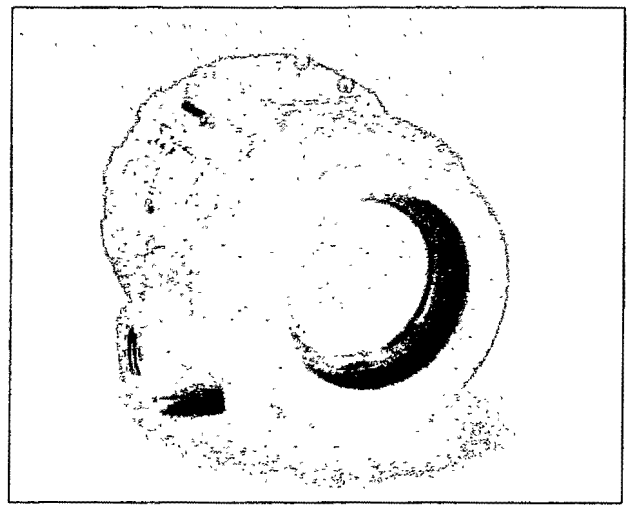

HART FOUNDATION TÜV Certified CE

Content

The Ultimate Temperature Transmitter for Critical Control and Safety Applications . . . . . page 2

Specifications

HART and *FOUNDATION* Fieldbus Specifications . . . . . page 3

HART / 4-20 mA Specifications . . . . . page 6

FOUNDATION Fieldbus Specifications . . . . . page 7

Product Certifications . . . . . page 9

Dimensional Drawings. . . . . page 13

Ordering Information . . . . . page 16

Configuration Data Sheets

HART® / 4–20 mA / and Safety Certified transmitter. . . . . page 20

Foundation™ Fieldbus transmitter . . . . . page 22

The Ultimate Temperature Transmitter for Critical Control and Safety Applications

The Rosemount 3144P Temperature Transmitter provides superior accuracy, stability, and reliability – making it the industry-leading temperature transmitter used in critical control and safety applications. The 3144P can be ordered with either 4–20 mA/*HART* or a completely digital *FOUNDATION* fieldbus protocol. It has the capability to accept either single-sensor or dual-sensor inputs. This dual-sensor input capability allows the transmitter to accept simultaneous input from two independent sensors, enabling measurement of differential temperatures, averaging temperature, or redundant temperature measurement. The transmitter can be configured for a variety of sensor inputs: RTD, thermocouple, millivolt, or ohm. The 3144P (*HART*) is approved for use in Safety Instrumented Systems (third party validated metrics are available for the 3144P. Testing done per IEC 61508 for Safety Instrumented Systems).

Best in Class Accuracy and Reliability

The transmitter provides industry-leading five-year stability, which reduces maintenance costs. The Transmitter-Sensor Matching feature eliminates interchangeability error, which improves accuracy by 75%. Sensor Drift Alert enables continuous monitoring of the differential temperature for two sensors. When one sensor drifts, the differential of the sensors will increase. If this difference exceeds defined limits, the user is alerted of an unreliable measurement. The *Hot Backup* feature can reduce the risk of losing important temperature measurements by 80% when the measurement automatically switches to the backup sensor if the primary sensor fails.

Reliable Transmitter Performance

Meeting the NAMUR NE 21 recommendations, the 3144P ensures top transmitter performance in harsh EMC environments. In addition, the 3144P *HART* transmitter meets NAMUR NE 43 and NE 89 recommendations.

FOUNDATION Fieldbus and *HART* Protocols

High performance and advanced diagnostics are available with *HART* or *FOUNDATION* fieldbus communication. These transmitters offer diagnostics that provide continuous measurement status (good, bad, or uncertain), as well as sensor failure indication. Both transmitters provide performance information to AMS.

Integral LCD Display

Local indication of temperature measurement and diagnostics provides immediate and accurate verification of process conditions.

Measurement Flexibility

The 3144P is capable of single-sensor or dual-sensor input. This also allows for configuration of differential or average temperature measurements.

Designed for Harsh Environments

The 3144P is designed with a dual-compartment housing that provides the highest reliability in harsh environments. The dual-compartment housing provides isolation between the electronics and terminal compartments. The large terminal block allows for easier wire installation. Enhanced EMI rejection and filtering result in unmatched stability in process measurement.

Certified for use in SIS Applications

The 3144P is certified to IEC61508 for non-redundant use in SIL 1 and 2 Safety Instrumented Systems and redundant use in SIL 3 Safety Instrumented Systems. In allowable installations, the 3144P HART electronics can be upgraded to safety certified electronics.

Advanced Temperature Diagnostics

The advanced 3144P powers *PlantWeb*® by communicating important temperature diagnostics and *PlantWeb* alerts to ensure process health and enable multi-sensor architecture.

Diagnostic Logging

The 3144P Temperature Transmitter keeps a record of any diagnostic information and logs the item to the database. The log is retained as long as the device has power or can be reset by the user via the 375 or AMS.

Statistical Process Monitoring (SPM)

Detect abnormal process situations with a means and standard deviation calculation by the transmitter.

Thermocouple Diagnostic

Use the transmitter to monitor the resistance of thermocouple loops in order to detect drift conditions or changing wiring conditions.

Rosemount Temperature Solutions

Rosemount 644 Temperature Transmitter
Head mount styles available with *HART* or *FOUNDATION* fieldbus protocol. Rail mount style available for *HART* protocol.

Rosemount 848T Eight Input Temperature Transmitter
Eight input transmitter available with *FOUNDATION* fieldbus protocol.

Rosemount 3420 Fieldbus Interface Module
Provides an interface between *FOUNDATION* fieldbus instruments and systems without fieldbus capability using standard interface protocols.

Rosemount 248 Temperature Transmitter
Head mount style (DIN B) and Rail mount style with *HART* protocol and complete temperature assembly.

Rosemount 148 Temperature Transmitter
Head mount style (DIN B) PC-programmable transmitter

Rosemount sensors, thermowells, and extensions
Rosemount has a broad offering of RTD and thermocouples that are designed to meet plant requirements.

Specifications

HART® AND *FOUNDATION*™ FIELDBUS

Functional

Inputs
User-selectable. See "Accuracy" on page 4 for sensor options.

Output
2-wire device with either 4–20 mA/*HART*, linear with temperature or input, or completely digital output with *FOUNDATION* fieldbus communication (ITK 4.6 compliant).

Isolation
Input/output isolation tested up to 500 V ac (707 V dc) at 50/60 Hz.

Humidity Limits
0–100% relative humidity.

Update Time
Approximately 0.5 seconds for a single sensor (1 second for dual sensors).

Physical

Conduit Connections
The standard field mount housing has ½–14 NPT conduit entries. Additional conduit entry type are available, including PG13.5 (PG11), M20 X 1.5 (CM20), or JIS G ½. When any of these additional entry types are ordered, adapters are placed in the standard field housing so these alternative conduit types fit correctly. See "Dimensional Drawings" on page 13 for dimensions.

Materials of Construction
Electronics Housing

- Low-copper aluminum or CF-8M (cast version of 316 Stainless Steel)

Paint

- Polyurethane

Cover O-rings
Buna-N

Mounting
Transmitters may be attached directly to the sensor. Optional mounting brackets (codes B4 and B5) allow for remote mounting. See "Optional Transmitter Mounting Brackets" on page 14.

Weight

Aluminum[1]	Stainless Steel[1]
3.1 lb (1.4 kg)	7.8 lb (3.5 kg)

(1) Add 0.5 lb (0.2 kg) for meter or 1.0 lb (0.5 kg) for bracket options.

Enclosure Ratings
NEMA 4X, CSA Enclosure Type 4X, IP66, and IP68.

Stability
- RTDs - ±0.1% of reading or 0.1 °C, whichever is greater, for 24 months.
- Thermocouples - ±0.1% of reading or 0.1 °C, whichever is greater, for 12 months.

5 Year Stability
- RTDs - ±0.25% of reading or 0.25 °C, whichever is greater, for 5 years.
- Thermocouples - ±0.5% of reading or 0.5 °C, whichever is greater, for 5 years.

Vibration Effect
Tested to the following with no effect on performance:

Frequency	Acceleration
10–60 Hz	0.21 mm peak displacement
60–2000 Hz	3 g

Self Calibration
The analog-to-digital measurement circuitry automatically self-calibrates for each temperature update by comparing the dynamic measurement to extremely stable and accurate internal reference elements.

RFI Effect
Worst case RFI effect is equivalent to the transmitter's nominal accuracy specification, according to Table on page 4, when tested in accordance with IEC 61000-4-3, 30 V/m (*HART*) / 20 V/m (HART T/C) /10 V/m (*FOUNDATION* fieldbus), 80 to 1000 MHz, with unshielded cable.

CE Electromagnetic Compatibility Compliance Testing
The 3144P meets or exceeds all requirements listed under IEC 61326: Amendment 1, 1998.

External Ground Screw Assembly

The external ground screw assembly can be ordered by specifying code G1 when an enclosure is specified. However, some approvals include the ground screw assembly in the transmitter shipment, hence it is not necessary to order code G1. The table below identifies which approval options include the external ground screw assembly.

Approval Type	External Ground Screw Assembly Included?(1)
NA, E5, K5, K6, KB	No–Order option code G1
N1, E1, I1, ND, K1, E7, N7, I7, K7, KA, I2 and E4	Yes

(1) Code G1 is also included with Integral Protector option code T1 does not need to be ordered separately.

Hardware Tag

- No charge
- 2 lines of 28 characters (56 characters total)
- Tags are stainless steel
- Permanently attached to transmitter
- Character height is 1/16-in. (1.6mm)
- A wire-on tag is available upon request. 5 lines of 12 characters (60 characters total)

Software Tag

- *HART* transmitter can store up to 8 characters. *FOUNDATION* fieldbus transmitters can store up to 32 characters.
- Can be ordered with different software and hardware tags.
- If no software tag characters are specified, the first 8 characters of the hardware tag are the default.

Accuracy

Sensor Options	Sensor Reference	Input Ranges		Recommended Min. Span(1)		Digital Accuracy(2)		D/A Accuracy(3)(4)
2-, 3-, 4-wire RTDs		°C	°F	°C	°F	°C	°F	
Pt 100	IEC 751, 1995 (α = 0.00385)	–200 to 850	–328 to 1562	10	18	± 0.10	± 0.18	±0.02% of span
Pt 100	JIS 1604, 1981 (α = 0.003916)	–200 to 645	–328 to 1193	10	18	± 0.10	± 0.18	±0.02% of span
Pt 200	IEC 751, 1995 (α = 0.00385)	–200 to 850	–328 to 1562	10	18	± 0.22	± 0.40	±0.02% of span
Pt 200	JIS 1604, 1981 (α = 0.003916)	–200 to 645	–328 to 1193	10	18	± 0.22	± 0.40	±0.02% of span
PT 500	IEC 751, 1995 (α = 0.00385)	–200 to 850	–328 to 1562	10	18	± 0.14	± 0.25	±0.02% of span
Pt 1000	IEC 751, 1995 (α = 0.00385)	–200 to 300	–328 to 572	10	18	± 0.10	± 0.18	±0.02% of span
Ni 120	Edison Curve No. 7	–70 to 300	–94 to 572	10	18	± 0.08	± 0.14	±0.02% of span
Cu 10	Edison Copper Winding No. 15	–50 to 250	–58 to 482	10	18	±1.00	± 1.80	±0.02% of span
Cu 100 (a=428)	GOST 6651-94	-185 to 200	-365 to 392	10	18	±0.48	±0.86	±0.02% of span
Cu 50 (a=428)	GOST 6651-94	-185 to 200	-365 to 392	10	18	±0.96	±1.73	±0.02% of span
Cu 100 (a=426)	GOST 6651-94	-50 to 200	-122 to 392	10	18	±0.48	±0.86	±0.02% of span
Cu 50 (a=426)	GOST 6651-94	-50 to 200	-122 to 392	10	18	±0.96	±1.73	±0.02% of span
Thermocouples(5)								
Type B(6)	NIST Monograph 175, IEC 584	100 to 1820	212 to 3308	25	45	± 0.75	± 1.35	±0.02% of span
Type E	NIST Monograph 175, IEC 584	–50 to 1000	–58 to 1832	25	45	± 0.20	± 0.36	±0.02% of span
Type J	NIST Monograph 175, IEC 584	–180 to 760	–292 to 1400	25	45	± 0.25	± 0.45	±0.02% of span
Type K(7)	NIST Monograph 175, IEC 584	–180 to 1372	–292 to 2502	25	45	± 0.25	± 0.45	±0.02% of span
Type N	NIST Monograph 175, IEC 584	–200 to 1300	–328 to 2372	25	45	± 0.40	± 0.72	±0.02% of span
Type R	NIST Monograph 175, IEC 584	0 to 1768	32 to 3214	25	45	± 0.60	± 1.08	±0.02% of span
Type S	NIST Monograph 175, IEC 584	0 to 1768	32 to 3214	25	45	± 0.50	± 0.90	±0.02% of span
Type T	NIST Monograph 175, IEC 584	–200 to 400	–328 to 752	25	45	± 0.25	± 0.45	±0.02% of span
DIN Type L	DIN 43710	–200 to 900	–328 to 1652	25	45	± 0.35	± 0.63	±0.02% of span
DIN Type U	DIN 43710	–200 to 600	–328 to 1112	25	45	± 0.35	± 0.63	±0.02% of span
Type W5Re/ W26Re	ASTM E 988-96	0 to 2000	32 to 3632	25	45	± 0.70	± 1.26	±0.02% of span
GOST Type L	GOST R 8.585-2001	-200 to 800	-392 to 1472	25	45	± 0.71	± 1.28	±0.02% of span
Millivolt Input		–10 to 100 mV		3 mV		±0.015 mV		±0.02% of span
2-, 3-, 4-wire Ohm Input		0 to 2000 ohms		20 ohm		±0.35 ohm		±0.02% of span

(1) No minimum or maximum span restrictions within the input ranges. Recommended minimum span will hold noise within accuracy specification with damping at zero seconds.

(2) Digital accuracy: Digital output can be accessed by the 375 Field Communicator.
(3) Total Analog accuracy is the sum of digital and D/A accuracies.
(4) Applies to HART / 4-20 mA devices.
(5) Total digital accuracy for thermocouple measurement: sum of digital accuracy +0.25 °C (0.45 °F) (cold junction accuracy).
(6) Digital accuracy for NIST Type B is ±3.0 °C (±5.4 °F) from 100 to 300 °C (212 to 572 °F).
(7) Digital accuracy for NIST Type K is ±0.50 °C (±0.9 °F) from –180 to –90 °C (–292 to –130 °F).

Reference Accuracy Example (*HART* only)

When using a Pt 100 (α = 0.00385) sensor input with a 0 to 100 °C span: Digital Accuracy would be ±0.10 °C, D/A accuracy would be ±0.02% of 100 °C or ±0.02 °C, Total = ±0.12 °C.

Differential Capability Exists Between Any Two Sensor Types (dual-sensor option)

For all differential configurations, the input range is X to Y where:

- X = Sensor 1 minimum – Sensor 2 maximum *and*
- Y = Sensor 1 maximum – Sensor 2 minimum.

Digital Accuracy for Differential Configurations (dual-sensor option, *HART* only)

- Sensor types are similar (e.g., both RTDs or both T/Cs): Digital Accuracy = 1.5 times worst case accuracy of either sensor type.
- Sensor types are dissimilar (e.g., one RTD, one T/C): Digital Accuracy = Sensor 1 Accuracy + Sensor 2 Accuracy.

Ambient Temperature Effect

TABLE 1. Ambient Temperature Effect

Sensor Options	Digital Accuracy per 1.8 °F (1.0 °C) Change in Ambient[1]	Range	D/A Effect[2]
2-, 3-, or 4- Wire RTDs			
Pt 100 (α = 0.00385)	0.0015 °C	Entire Sensor Input Range	0.001% of span
Pt 100 (α = 0.003916)	0.0015 °C	Entire Sensor Input Range	0.001% of span
Pt 200 (α = 0.00385)	0.0023 °C	Entire Sensor Input Range	0.001% of span
Pt 200 (α = 0.003916)	0.0023 °C	Entire Sensor Input Range	0.001% of span
Pt 500	0.0015 °C	Entire Sensor Input Range	0.001% of span
Pt 1000	0.0015 °C	Entire Sensor Input Range	0.001% of span
Ni 120	0.0010 °C	Entire Sensor Input Range	0.001% of span
Cu 10	0.015 °C	Entire Sensor Input Range	0.001% of span
Cu 100 (a=428)	0.002 °C	Entire Sensor Input Range	0.001% of span
Cu 50 (a=428)	0.004 °C	Entire Sensor Input Range	0.001% of span
Cu 100 (a=426)	0.002 °C	Entire Sensor Input Range	0.001% of span
Cu 50 (a=426)	0.004 °C	Entire Sensor Input Range	0.001% of span
Thermocouples			
Type B	0.014 °C	R ≥ 1000 °C	0.001% of span
	0.029 °C – 0.0021% of (R – 300)	300 °C ≤ R < 1000 °C	
	0.046 °C – 0.0086% of (R – 100)	100 °C ≤ R < 300 °C	
Type E	0.004 °C + 0.00043% of R		0.001% of span
Type J	0.004 °C + 0.00029% of R	R ≥ 0 °C	0.001% of span
	0.004 °C + 0.0020% of abs. val. R	R< 0 °C	
Type K	0.005 °C + 0.00054% of R	R ≥ 0 °C	0.001% of span
	0.005 °C + 0.0020% of abs. val. R	R < 0 °C	
Type N	0.005 °C + 0.00036% of R	All	0.001% of span
Types R and S	0.015 °C	R ≥ 200 °C	0.001% of span
	0.021 °C – 0.0032% of R	R < 200 °C	
Type T	0.005 °C	R ≥ 0 °C	0.001% of span
	0.005 °C + 0.0036% of abs. val. R	R < 0 °C	
DIN Type L	0.0054 °C + 0.00029% of R	R ≥ 0 °C	0.001% of span
	0.0054 °C + 0.0025% of abs. val. R	R < 0 °C	
DIN Type U	0.0064 °C	R ≥ 0 °C	0.001% of span
	0.0064 °C + 0.0043% of abs. val. R	R < 0 °C	
Type W5Re/W26Re	0.016 °C	R ≥ 200 °C	0.001% of span
	0.023 °C + 0.0036% of R	R < 200 °C	
GOST Type L	0.007 > 0 °C		0.001% of span
	0.007 ± 0.003% < 0 °C		
Millivolt Input	0.00025 mV	Entire Sensor Input Range	0.001% of span
2-, 3-, 4-wire Ohm Input	0.007 Ω	Entire Sensor Input Range	0.001% of span

(1) Change in ambient is in reference to the calibration temperature of the transmitter (20° C [68° F])
(2) Applies to HART / 4-20 mA devices.

Transmitters may be installed in locations where the ambient temperature is between –40 and 85 °C (–40 and 185 °F).
To maintain excellent accuracy performance, each transmitter is individually characterized over this ambient temperature range at the factory.

Dimensional Drawings

Transmitter Exploded View

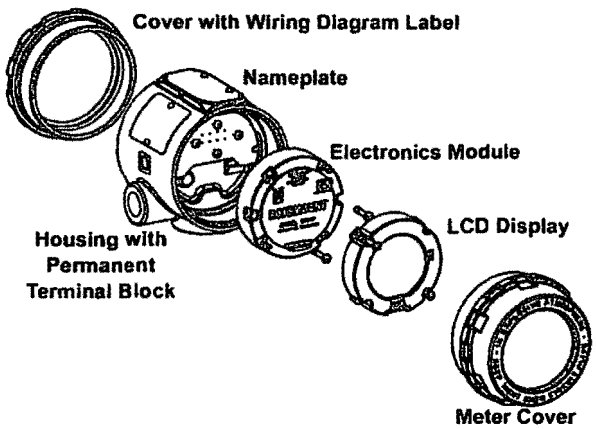

Switch Location

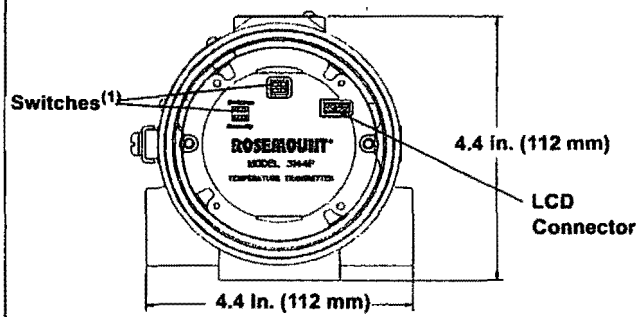

(1) *Alarm and Write Protect (HART), Simulate and Write Protect (FOUNDATION Fieldbus)*

LCD Display Faceplate

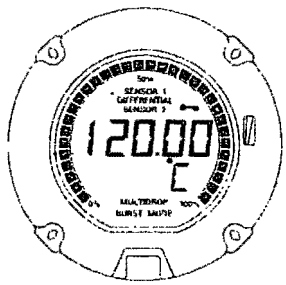

Transmitter Dimensional Drawing

Top View

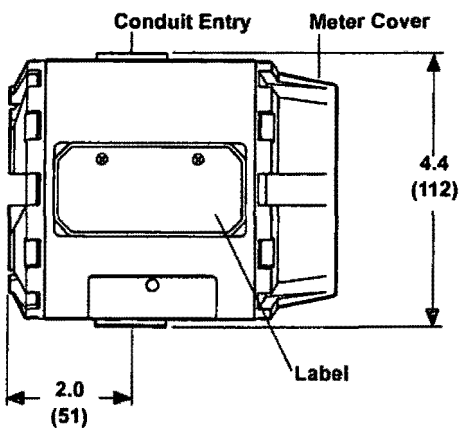

Side View

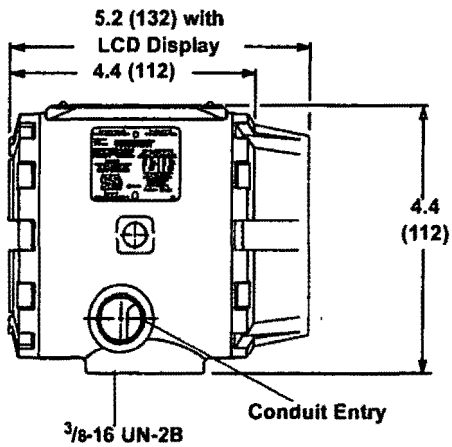

Dimensions are in inches (millimeters)

Transmitter Dimensional Drawing for Conduits with M20 x 1.5, PG 13.5, and JIS G1/2 Entries

Top View

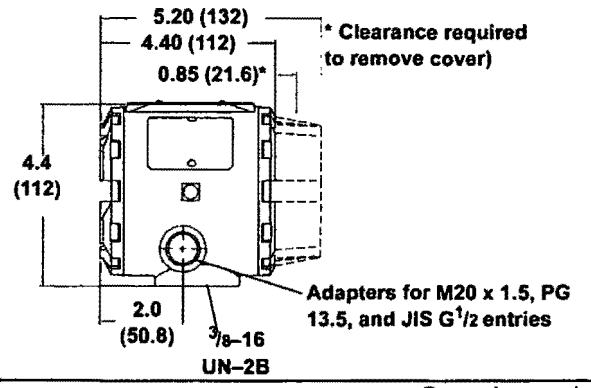

Front View

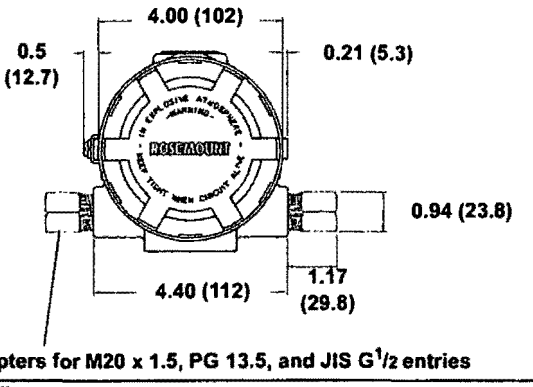

Dimensions are in inches (millimeters)

Optional Transmitter Mounting Brackets

Option Code B4 Bracket

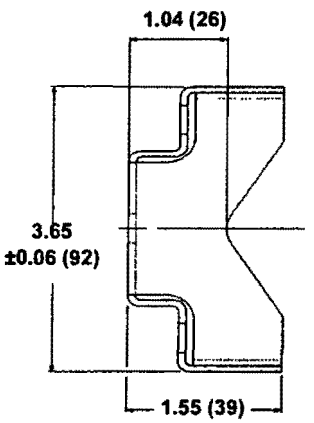

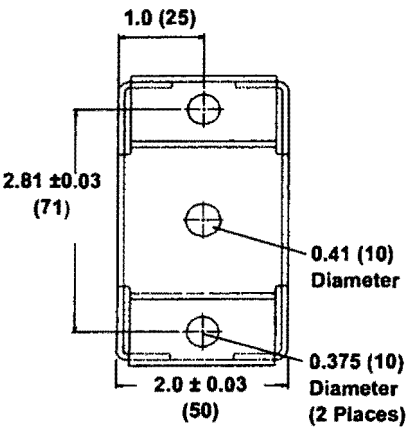

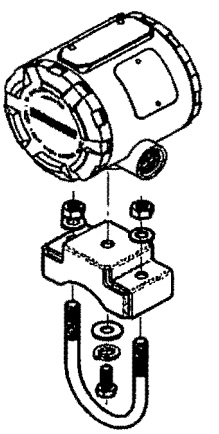

Option Code B5 Bracket

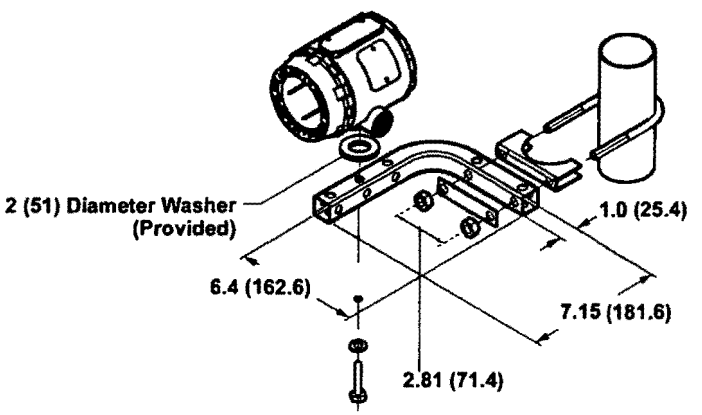

Dimensions are in inches (millimeters)

FIGURE 1. *HART* / 4–20 mA

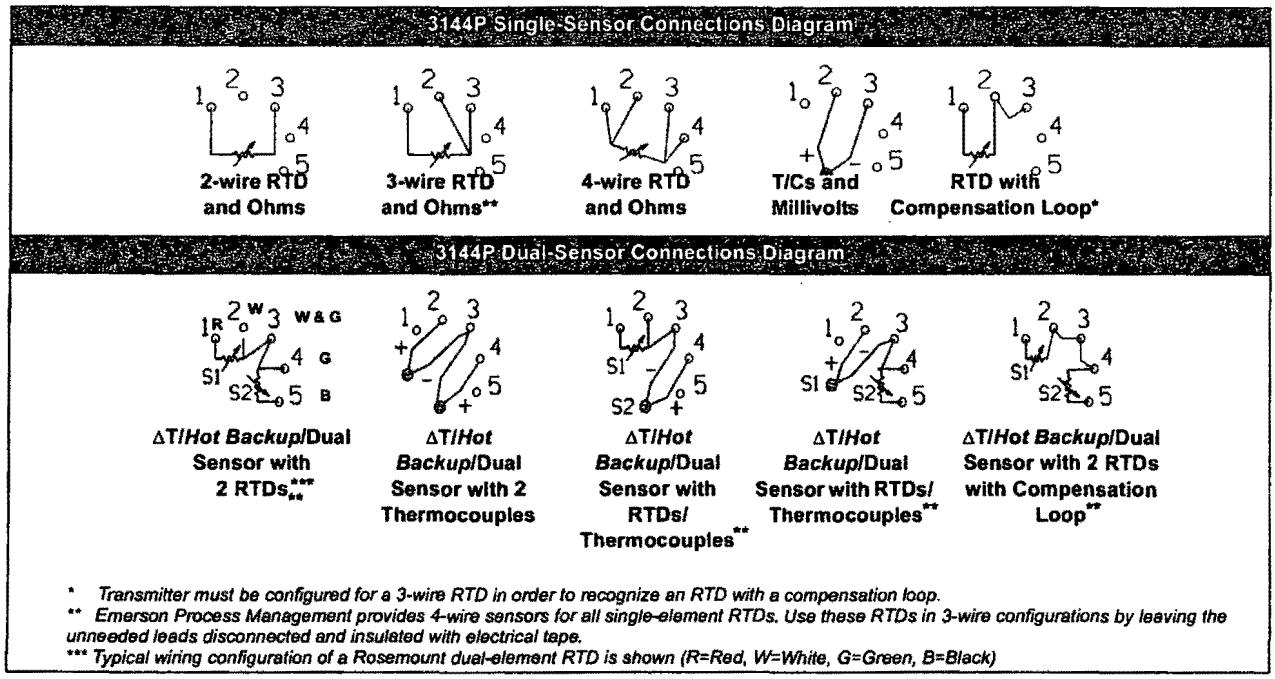

* *Transmitter must be configured for a 3-wire RTD in order to recognize an RTD with a compensation loop.*
** *Emerson Process Management provides 4-wire sensors for all single-element RTDs. Use these RTDs in 3-wire configurations by leaving the unneeded leads disconnected and insulated with electrical tape.*
*** *Typical wiring configuration of a Rosemount dual-element RTD is shown (R=Red, W=White, G=Green, B=Black)*

FIGURE 2. FOUNDATION Fieldbus

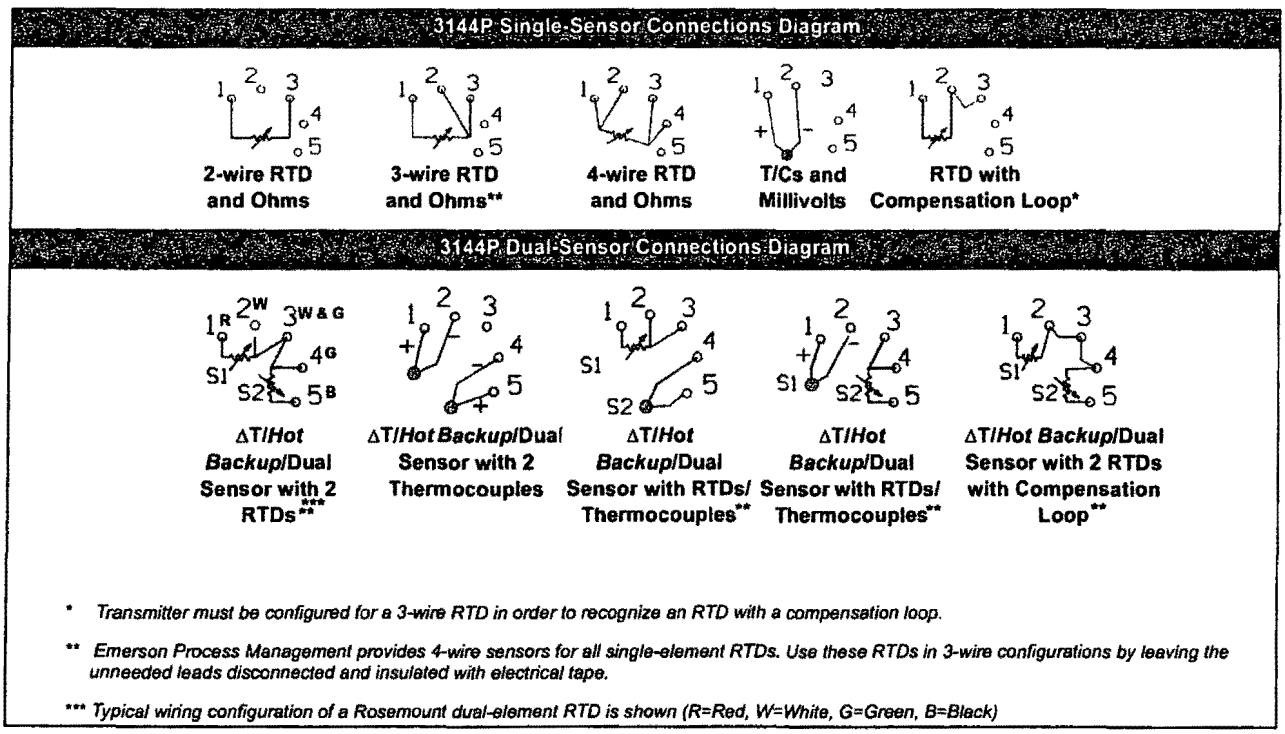

* *Transmitter must be configured for a 3-wire RTD in order to recognize an RTD with a compensation loop.*

** *Emerson Process Management provides 4-wire sensors for all single-element RTDs. Use these RTDs in 3-wire configurations by leaving the unneeded leads disconnected and insulated with electrical tape.*

*** *Typical wiring configuration of a Rosemount dual-element RTD is shown (R=Red, W=White, G=Green, B=Black)*

Ordering Information

Model	Product Description
3144P	Temperature Transmitter
	Transmitter Housing Type/Conduit Entry
D1	Field Mount Housing (Dual-Compartment), Aluminum, 1/2–14 NPT
D2	Field Mount Housing (Dual-Compartment), Aluminum, M20 x 1.5 (CM20)
D3	Field Mount Housing (Dual-Compartment), Aluminum, PG 13.5 (PG11)
D4	Field Mount Housing (Dual-Compartment), Aluminum, JIS G 1/2
D5	Field Mount Housing (Dual-Compartment), Stainless Steel, 1/2–14 NPT
D6	Field Mount Housing (Dual-Compartment), Stainless Steel, M20 x 1.5 (CM20)
D7	Field Mount Housing (Dual-Compartment), Stainless Steel, PG 13.5 (PG11)
D8	Field Mount Housing (Dual-Compartment), Stainless Steel, JIS G 1/2
Code	**Output**
A	4-20 mA with Digital Signal based on *HART* protocol
F	FOUNDATION fieldbus digital signal (includes 3 AI function blocks and Backup Link Active Scheduler)
Code	**Measurement Type Configuration**
1	Single-Sensor Input
2	Dual-Sensor Input
Code	**Product Certifications**
NA	No Approval
E5	FM explosion-proof and non incendive approval
I5[1]	FM intrinsic safety and non-incendive (includes standard I.S. and FISCO for fieldbus units)
K5[1]	FM intrinsic safety, non-incendive, and explosion-proof combination (includes standard I.S. and FISCO for fieldbus units)
KB[1]	FM and CSA intrinsic safety, explosion-proof & non-incendive combination (includes standard IS and FISCO for fieldbus units)
I6[1]	CSA intrinsic safety and FISCO Division 2 (includes standard IS and FISCO for fieldbus units)
K6[1]	CSA intrinsic safety, FISCO Division 2, and explosion-proof combination (includes standard IS and FISCO for fieldbus units)
E1	ATEX flameproof approval
N1	ATEX type n approval
I1[1]	ATEX intrinsic safety (includes standard I.S. and FISCO for fieldbus units)
K1[1]	ATEX intrinsic safety, flameproof, and Type n approval combination (includes standard IS and FISCO for fieldbus units)
ND	ATEX dust ignition proof approval
KA[1]	ATEX/CSA intrinsic safety and explosion-proof combination (includes standard I.S. and FISCO for fieldbus units.)
E7	IECEx flameproof approval
N7	IECEx type n approval
I7[1][2]	IECEx intrinsic safety
K7[1][2]	IECEx intrinsic safety, flameproof, and type n combination
I2[2]	CEPEL intrinsic safety approval
E4[2]	JIS flameproof approval (requires either housing code D4 or D8)
Code	**Options**
***PlantWeb* Control**	
A01	Regulatory control suite: PID with autotune, arithmetic, signal characterizer, input selector – FOUNDATION fieldbus only
***PlantWeb* Diagnostics**	
D01	Diagnostics suite: Statistical Process Monitoring (SPM), Thermocouple Diagnostic, Drift Alert – FOUNDATION fieldbus only
Mounting Bracket	
B4	Universal mounting bracket for 2-inch pipe and panel mounting—SST bracket and bolts
B5	Universal "L" mounting bracket for 2-inch pipe mounting—SST bracket and bolts
Meter	
M5	LCD display
External Ground Lug	
G1	External ground lug assembly (See "External Ground Screw Assembly" on page 4.)
Transient Protector	
T1	Integral Transient Protector

Ordering Information Continued on Next Page

Code	Options
Custom Software Configuration Request	
C1[3]	Factory enters date, descriptor, and message fields (CDS required with order)
50 Hz Line Voltage Filter Enabled	
F5	50 Hz line voltage filter
NAMUR Compliant Alarm Failure	
A1	Analog output levels compliant with NAMUR recommendation NE-43, June 1996. Alarm configuration **high** – *HART* only
CN	Analog output levels compliant with NAMUR recommendation NE-43, June 1996. Alarm configuration **low** – *HART* only
Low Alarm	
C8	Analog output levels compliant with Rosemount standard. Alarm configuration **low** – *HART* only
Transmitter-Sensor Matching	
C2	Transmitter-Sensor Matching–trim to specific Rosemount RTD calibration schedule
C7	Trim to special non-standard sensor (special sensor–customer must provide sensor information)
Five Point Calibration Data	
C4	5-point calibration (use option code Q4 to generate a calibration certificate)
Calibration Certification	
Q4	Calibration certificate (3-point standard; use code C4 with Q4 option for a five point calibration certificate)
QP	Calibration certificate and tamper evident seal
Dual-Input Custom Configuration (only with measurement type option code 2)	
U1[4]	*Hot Backup*
U2[5]	Average temperature with *Hot Backup* and Sensor Drift Alert – warning mode
U3[5]	Average temperature with *Hot Backup* and Sensor Drift Alert – alarm mode
U4	Two independent sensors
U5	Differential temperature
U6[4]	Average temperature
U7[4]	First good temperature
U8[4]	Minimum temperature – *FOUNDATION* fieldbus only
U9[4]	Maximum temperature – *FOUNDATION* fieldbus only
Special Certifications	
QT	Safety-certified to IEC 61508 with certificate of FMEDA data - HART only
QS	Prior-use certificate of FMEDA Data – HART only
Conduit Electrical Connector	
GE[6]	M12, 4-pin, Male Connector (*eurofast*®)
GM[6]	A size Mini, 4-pin, Male Connector (*minifast*®)
Assembly	
XA	Sensor specified separately and assembled to transmitter

Typical Model Number: 3144P D1 A 1 E5 B4 M5

(1) When IS approval is ordered on a FOUNDATION fieldbus, both standard IS and FISCO IS approvals apply. The device label is marked appropriately.

(2) Consult factory for availability when ordering with HART or FOUNDATION fieldbus models.

(3) Consult factory for availability when ordering with FOUNDATION fieldbus models.

(4) Codes U1 and U6 for HART transmitters will not have drift alert enabled; option codes U1, U6, U7, U8, and U9 for Foundation fieldbus transmitters will have drift alert enabled.

(5) Not available for FOUNDATION Fieldbus.

(6) Available with Intrinsically Safe approvals only. For FM Intrinsically Safe or non-incendive approval (option code I5), install in accordance with Rosemount drawing 03151-1009 to maintain NEMA 4X rating.

Standard Configuration

Both standard and custom configuration settings may be changed. Unless specified, the transmitter will be shipped as follows:

Standard Configuration	
4 mA value / Lower Range (*HART* / 4–20 mA) Measurement Point LO (FOUNDATION Fieldbus)	0 °C
20 mA value / Upper Range (*HART* / 4–20 mA) Measurement Point HI (FOUNDATION Fieldbus)	100 °C
Damping	5 seconds
Output	Linear with temperature / *FOUNDATION* fieldbus
Failure Mode (*HART* / 4–20 mA)	High
Line Voltage Filter	60 Hz
Software Tag	See "Tagging"
Optional Integral Meter	Units and mA / Sensor 1 units
Single Sensor option	
Sensor Type	4-wire Pt 100 α = 0.00385 RTD
Primary Variable (*HART* / 4–20 mA) AI 1400 (FOUNDATION Fieldbus)	Sensor 1
Secondary Variable AI 1600 (FOUNDATION Fieldbus)	Terminal Temperature
Tertiary Variable	Not Available
Quaternary Variable	Not Available
Dual-Sensor option	
Sensor Type	Two 3-wire Pt 100 α = 0.00385 RTD
Primary Variable (*HART* / 4–20 mA) AI 1400 (FOUNDATION Fieldbus)	Sensor 1
Secondary Variable AI 1500 (FOUNDATION Fieldbus)	Sensor 2
Tertiary Variable AI 1600 (FOUNDATION Fieldbus)	Terminal Temperature
Quaternary Variable	Not Used

Custom Configuration

The 3144P transmitter can be ordered with custom configuration. The table below lists the requirements necessary to specify a custom configuration.

Option Code	Requirements/Specification
C1: Factory Data[1]	Date: day/month/year Descriptor: 16 alphanumeric character Message: 32 alphanumeric character Custom Alarm Levels can be specified for configuration at the factory.
C2: Transmitter Sensor Matching	The transmitters are designed to accept Callendar-van Dusen constants from a calibrated RTD schedule and generate a custom curve to match any specific sensor curve. Specify a Series 68, 65, or 78 RTD sensor on the order with a special characterization curve (V or X8Q4 option). These constants will be programmed into the transmitter with this option.
C4: Five Point Calibration	Will include five-point calibration at 0, 25, 50, 75, and 100% analog and digital output points. Use with option code Q4 to obtain a Calibration Certificate.
C7: Special Sensor	Used for non-standard sensor, adding a special sensor or expanding input. Customer must supply the non-standard sensor information. Additional special curve will be added to sensor curve input choices.
A1: NAMUR-Compliant, high alarm	Analog output levels compliant with NAMUR. Alarm is set to fail high.
CN: NAMUR-Compliant, low alarm	Analog output levels compliant with NAMUR. Alarm is set to fail low.
C8: Low Alarm	Analog output levels compliant with Rosemount standard. Alarm is set to fail low
F5: 50 Hz Line Filter	Calibrated to 50 Hz line voltage filter.

(1) CDS required

To custom configure the 3144P with the dual-sensor option transmitter for one of the applications described below, indicate the appropriate option code in the model number. If a sensor type is not specified, the transmitter will be configured for two 3-wire Pt 100 (α = 0.00385) RTDs if any of the following option codes are selected.

Option Code U1: Hot Backup	
Primary Usage	Primary usage sets the transmitter to automatically use sensor 2 as the primary input if sensor 1 fails. Switching from sensor 1 to sensor 2 is accomplished without any effect on the analog signal.
Primary Variable	1st good
Secondary Variable	Sensor 1
Tertiary Variable	Sensor 2
Quaternary Variable	Terminal Temperature

Option Code U2: Average Temperature with Hot Backup and Sensor Drift Alert – Warning Mode	
Primary Usage	Critical applications, such as safety interlocks and control loops. Outputs the average of two measurements and alerts if temperature difference exceeds the set maximum differential (Sensor Drift Alert – warning mode). If a sensor fails, an alert will be sent digitally. The primary variable will be reported as the remaining working sensor value.
Primary Variable	Sensor Average
Secondary Variable	Sensor 1
Tertiary Variable	Sensor 2
Quaternary Variable	Terminal Temperature

Option Code U3: Average temperature with Hot Backup and Sensor Drift Alert – Alarm Mode	
Primary Usage	Critical applications, such as safety interlocks and control loops. Outputs the average of two measurements and alarms if temperature difference exceeds the set maximum differential (Sensor Drift Alert – alarm mode). If a sensor fails, an alert will be sent digitally. The primary variable will be reported as the remaining working sensor value.
Primary Variable	Sensor Average
Secondary Variable	Sensor 1
Tertiary Variable	Sensor 2
Quaternary Variable	Terminal Temperature

Option Code U4: Two Independent Sensors	
Primary Usage	Used in non-critical applications where the digital output is used to measure two separate process temperatures.
Primary Variable	Sensor 1
Secondary Variable	Sensor 2
Tertiary Variable	Terminal Temperature
Quaternary Variable	Not Used

Option Code U5 Differential Temperature	
Primary Usage	The differential temperature of two process temperatures is configured as the primary variable.
Primary Variable	Differential Temperature
Secondary Variable	Sensor 1
Tertiary Variable	Sensor 2
Quaternary Variable	Terminal Temperature

Option Code U6: Average Temperature	
Primary Usage	When average measurement of two different process temperatures is required.If a sensor fails, an alert will be sent and the primary variable will use the measurement of the working sensor.
Primary Variable	Sensor Average
Secondary Variable	Sensor 1
Tertiary Variable	Sensor 2
Quaternary Variable	Terminal Temperature

Configuration Data Sheet

HART® / 4–20 mA / AND SAFETY CERTIFIED TRANSMITTER

★ = Default Configuration

Customer Information

Customer	Model No.
P.O. No.	Line Item

Sensor

Sensor Type	Sensor 1		Sensor 2 (dual-sensor option)	
		No. of Leads		No. of Leads
	☐ **Pt 100 α = 0.00385**	2-Wire	Pt 100 α = 0.00385	2-Wire
	Pt 100 α = 0.003916	3-Wire	Pt 100 α = 0.003916	3-Wire
	Pt 200 α = 0.00385	**4-Wire**	Pt 200 α = 0.00385	
	Pt 500 α = 0.00385		Pt 500 α = 0.00385	
	Pt 1000 α = 0.00385		Pt 1000 α = 0.00385	
	Cu 10		Cu 10	
	Ni 120		Ni 120	
	Transmitter Sensor Matching (C2 Option)		Transmitter Sensor Matching (C2 Option)	
	Nonstandard (C7 Option), Attach Calibration Schedule		Nonstandard (C7 Option), Attach Calibration Schedule	
	Ohms		Ohms	
	NIST Type B T/C	NIST Type S T/C	NIST Type B T/C	NIST Type S T/C
	NIST Type E T/C	NIST Type T T/C	NIST Type E T/C	NIST Type T T/C
	NIST Type J T/C	mV	NIST Type J T/C	mV
	NIST Type K T/C	DIN Type L T/C	NIST Type K T/C	DIN Type L T/C
	NIST Type N T/C	DIN Type U T/C	NIST Type N T/C	DIN Type U T/C
	NIST Type R T/C	Type W5Re/W26Re T/C	NIST Type R T/C	Type W5Re/W26Re T/C

Note: A nonstandard sensor type can only be used for Sensor 1 or Sensor 2, not both.

4 mA Value	**0 °C**	_____°C	_____°F	_____ °R	_____ °mV	_____ °K	_____ Ohms
20 mA Value	**100 °C**	_____°C	_____ °F	_____ °R	_____ °mV	_____ °K	_____ Ohms
Damping	**5 Seconds**	Other _____ (Value must be less than 32 seconds)					

Tagging

Hardware Tag _____

Software Tag _ _ _ _ _ _ _ _ (8 characters maximum)

Transmitter Information

Integral Meter (if ordered)

☐ ***Alternating mA and Engineering Units*** ☐ mA ☐ Alternating Sensor 1 and Sensor 2
☐ Engineering Units ☐ Sensor 1 Engineering Units ☐ Differential Engineering Units
☐ Percent ☐ Sensor 2 Engineering Units ☐ Average Engineering Units
☐ Alternating Differential Temperature, Sensor 1, and Sensor 2

Descriptor (C1 Option) ☐ _ _ _ _ _ _ _ _ _ _ _ _ _ _ _ _ (16 characters maximum)

Message (C1 Option) ☐ _
(32 characters maximum)

Date (C1 Option) ☐ Day _ _ (numeric) ☐ Month _ _ _ (alphabetic) ☐ Year_ _ (numeric)

Jumper Selection

Failure Mode	☐ **High**	☐ Low
Software Security	☐ **Off**	☐ On

= Default Configuration

Signal Selection

☐ **4-20 mA with simultaneous digital signal based on *HART* protocol**

☐ Burst Mode of *HART* digital process variable

Burst Mode output options:

☐ Primary variable in engineering units

☐ Primary variable in percentage of range

☐ All dynamic variables in engineering units and the primary variable mA value

☐ Multidrop communication (Not applicable for Safety Certified transmitter.)

Note: This option fixes the transmitter's analog output at 4 mA.

Choose transmitter address for each transmitter (1 -15) _____

Note: Default transmitter address is 1 if multidrop communication is selected.

Alarm and Saturation Values

☐ **Rosemount Standard**

☐ NAMUR-compliant. *Available with option code A1 or CN.*

☐ Custom (option code C1).

☐ High Alarm Level: _____ mA (must be between 21.0 and 23.0 mA)

☐ Low Alarm Level: _____ mA (must be between 3.5 and 3.75 mA)

☐ High Saturation Level: _____ mA (must be between 20.5 mA and the High Alarm Value minus 0.1 mA, 20.5 to 20.9 mA for safety certified)

☐ Low Saturation Level: _____ mA (must be between the Low Alarm Value plus 0.1 mA and 3.9 mA, minimum 3.7 mA for safety certified)

Configuration Data Sheet

FOUNDATION™ FIELDBUS TRANSMITTER

= **Default Configuration**

Customer Information

Customer _____ Model No. _____

P.O. No. _____ Line Item _____

Transmitter Tagging

Hardware Tag _____
_____
(2 lines x 28 character max.)

Physical Device Tag _____
(32 character max.)

Integral Meter (Choose up to 4)

☐ Sensor 1 ☐ Sensor 2 ☐ Terminal Temperature
☐ Average Temperature ☐ Differential Temperature

Transmitter Information

Descriptor _____
(C1 Option) (32 characters maximum)

Message _____
(C1 Option) _____
(48 characters maximum)

Date Day __ __ Month __ __ Year __ __
(C1 Option) Hour __ __ Minute __ __ Second __ __

Security

Write Protect (hardware and software) ☐ **Off** ☐ On

Damping

☐ **5 Seconds** ☐ Other _____ (values must be less than 32 seconds)

Dual Sensor Configuration

Drift Limit
☐ **Default** ☐ Other _____

Hot Backup
☐ Enable ☐ **Disable**

Note: Configure Sensor Information on the next page to complete your FOUNDATION Fieldbus Configuration Data Sheet.

Sensor 1

Sensor Tag _____ (32 Characters Max)

Type

- ☐ Pt 100 α = 0.00385 ★
- Pt 100 α = 0.003916
- Pt 200 α = 0.00385
- Pt 500 α = 0.00385
- Pt 1000 α = 0.00385
- Cu 10
- Ni 120
- Transmitter Sensor Matching (C2 Option)
- Nonstandard (C7 Option), Attach Calibration Schedule
- Ohms
- NIST Type B T/C
- NIST Type E T/C
- NIST Type J T/C
- NIST Type K T/C
- NIST Type N T/C
- NIST Type R T/C
- NIST Type S T/C
- NIST Type T T/C
- mV
- DIN Type L T/C
- DIN Type U T/C
- Type W5Re/W26Re T/C

Number of Leads

☐ 2-wire ☐ 3-wire ☐ 4-wire★

Measurement Point

LO _____ HI _____

Units

☐ mV	☐ °C ★
☐ Ohms	☐ °F
☐ K	☐ °R

Alarms	Priority (0-15)
HI HI Alarm _____	_____
HI Alarm _____	_____
LO Alarm _____	_____
LO LO Alarm _____	_____

Sensor 2

Sensor Tag _____ (32 Characters Max)

Type

- Pt 100 α = 0.00385
- Pt 100 α = 0.003916
- Pt 200 α = 0.00385
- Pt 500 α = 0.00385
- Pt 1000 α = 0.00385
- Cu 10
- Ni 120
- Transmitter Sensor Matching (C2 Option)
- Nonstandard (C7 Option), Attach Calibration Schedule
- Ohms
- NIST Type B T/C
- NIST Type E T/C
- NIST Type J T/C
- NIST Type K T/C
- NIST Type N T/C
- NIST Type R T/C
- NIST Type S T/C
- NIST Type T T/C
- mV
- DIN Type L T/C
- DIN Type U T/C
- Type W5Re/W26Re T/C

Number of Leads

☐ 2-wire ☐ 3-wire

Measurement Point

LO _____ HI _____

Units

☐ mV	☐ °C
☐ Ohms	☐ °F
☐ K	☐ °R

Alarms	Priority (0-15)
HI HI Alarm _____	_____
HI Alarm _____	_____
LO Alarm _____	_____
LO LO Alarm _____	_____

Additional Input

Sensor Tag _____ (32 Characters Max)

- ☐ Differential Temperature or
- ☐ Terminal Temperature

Measurement Point

LO _____ HI _____

Units

☐ mV	☐ °C
☐ Ohms	☐ °F
☐ K	☐ °R

Alarms	Priority (0-15)
HI HI Alarm _____	_____
HI Alarm _____	_____
LO Alarm _____	_____
LO LO Alarm _____	_____

Product Data Sheet
00813-0100-4021, Rev HA
March 2008

Rosemount 3144P

The Emerson logo is a trademark and service mark of Emerson Electric Co.
Rosemount, the Rosemount logotype, and Hot Backup are registered trademarks of Rosemount Inc.
PlantWeb and the PlantWeb logotype is a registered trademark of Emerson Process Management.
HART is a registered trademark of the HART Communication Foundation.
Eurofast and Minifast are registered trademarks of Turck Inc.
FOUNDATION is a trademark of the Fieldbus Foundation.
All other marks are the property of their respective owners.

Standard Terms and Conditions of Sale can be found at www.rosemount.com\terms_of_sale

Emerson Process Management

Rosemount Inc.
8200 Market Boulevard
Chanhassen, MN 55317 USA
T (U.S.) 1-800-999-9307
T (International) (952) 906-8888
F (952) 949-7001

www.rosemount.com

Emerson Process Management
Heath Place
Bognor Regis
West Sussex PO22 9SH
England
Tel 44 (1243) 863 121
Fax 44 (1243) 867 5541

Emerson Process Management Asia Pacific Private Limited
1 Pandan Crescent
Singapore 128461
T (65) 6777 8211
F (65) 6777 0947
Enquiries@AP.emersonprocess.com

© 2008 Rosemount, Inc.

EMERSON.
Process Management

12

Section Twelve

Electrical Boxes Catalog

B1730 BOX H/20 LOADING

- Traffic Box
- Caltrans No. 6T
- State Specs

Click links for larger views of the drawings on this page.

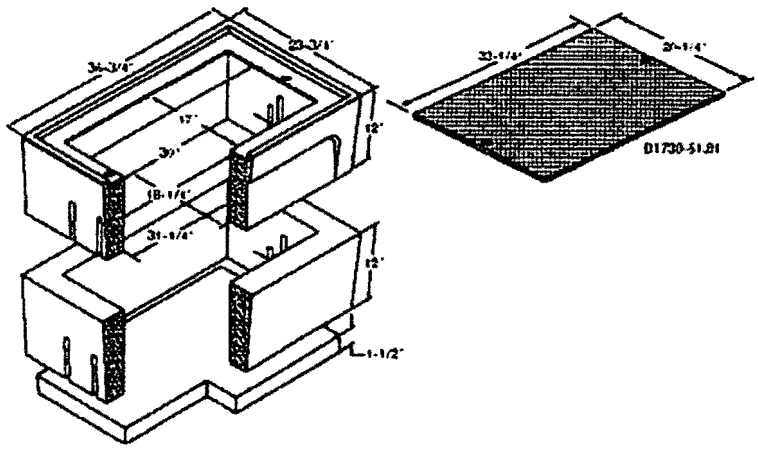

A high density reinforced concrete box with non-settling shoulders positioned to maintain grade and facilitate back filling. Approximate dimensions shown.

Christy Ordering Code	Item	Approx. Shipping Weight	Description
B1730BOX	Box	289	B1730 Utility Box (17" x 30") H/20 loading 6 per pallet
B1730-51JH	Cover	111	Steel checker plate, H/20 loading, bolt down
B1730-51G	Cover	109	Steel checker plate, H/20 loading, bolt down with reading lid 8" x 12"
B1730X12	Extension	244	12" reinforced concrete, H/20 loading - 8 per pallet
B36SL	Slab	112	Reinforced concrete (20" x 34")

Galvanizing available on all steel covers.

TO FIND CENTIMETERS MULTIPLY INCHES BY 2.5 TO FIND KILOGRAMS MULTIPLY POUNDS BY .45

NetObjects FUSION

Copyright 2005 Christy Concrete Products, Inc. All Rights Reserved

Electrical Boxes Catalog

N36 ELECTRICAL BOX 17-3/4" x 30"

- Etched polyethylene face
- Face Anchored in Concrete
- Ulta-Violet Inhibitor

Click links for larger views of the drawings on this page.

Illustration Specifications

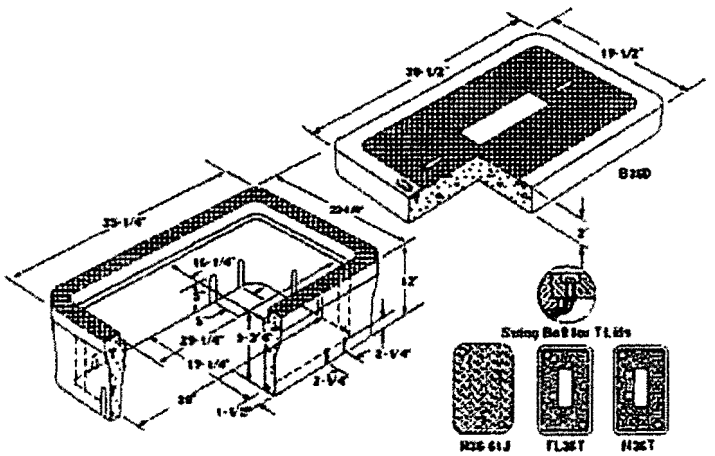

A high density reinforced concrete box with non-settling shoulders positioned to maintain grade and facilitate back filling. Approximate dimensions shown.

Christy Ordering Code	Item	Approx. Shipping Weight	Description
B36BOX	Box	175	N36 Electrical Box (17-1/4" x 30") Meets PG&E and #6 State Specifications - 6 per pallet
B36D	Lid	80	Reinforced concrete
FL36D	Lid	28	Fibrelyte lid, non-concrete
N36T	Lid	80	Reinforced concrete, bolt down (order separate bolts)
FL36T	Lid	32	Fibrelyte lid, bolt down (order bolts separate)
B36-61D	Cover	59	Steel checker plate
N36-61J	Cover	60	Steel checker plate, bolt down (order bolts separate)
B36X12	Extension	179	12" reinforced concrete - 8 per pallet
B36SL	Slab	113	Reinforced concrete (20" x 34")
B36BA	Base	128	6" high, reinforced concrete

Galvanizing available on all steel covers.

TO FIND CENTIMETERS MULTIPLY INCHES BY 2.5 TO FIND KILOGRAMS MULTIPLY POUNDS BY .45

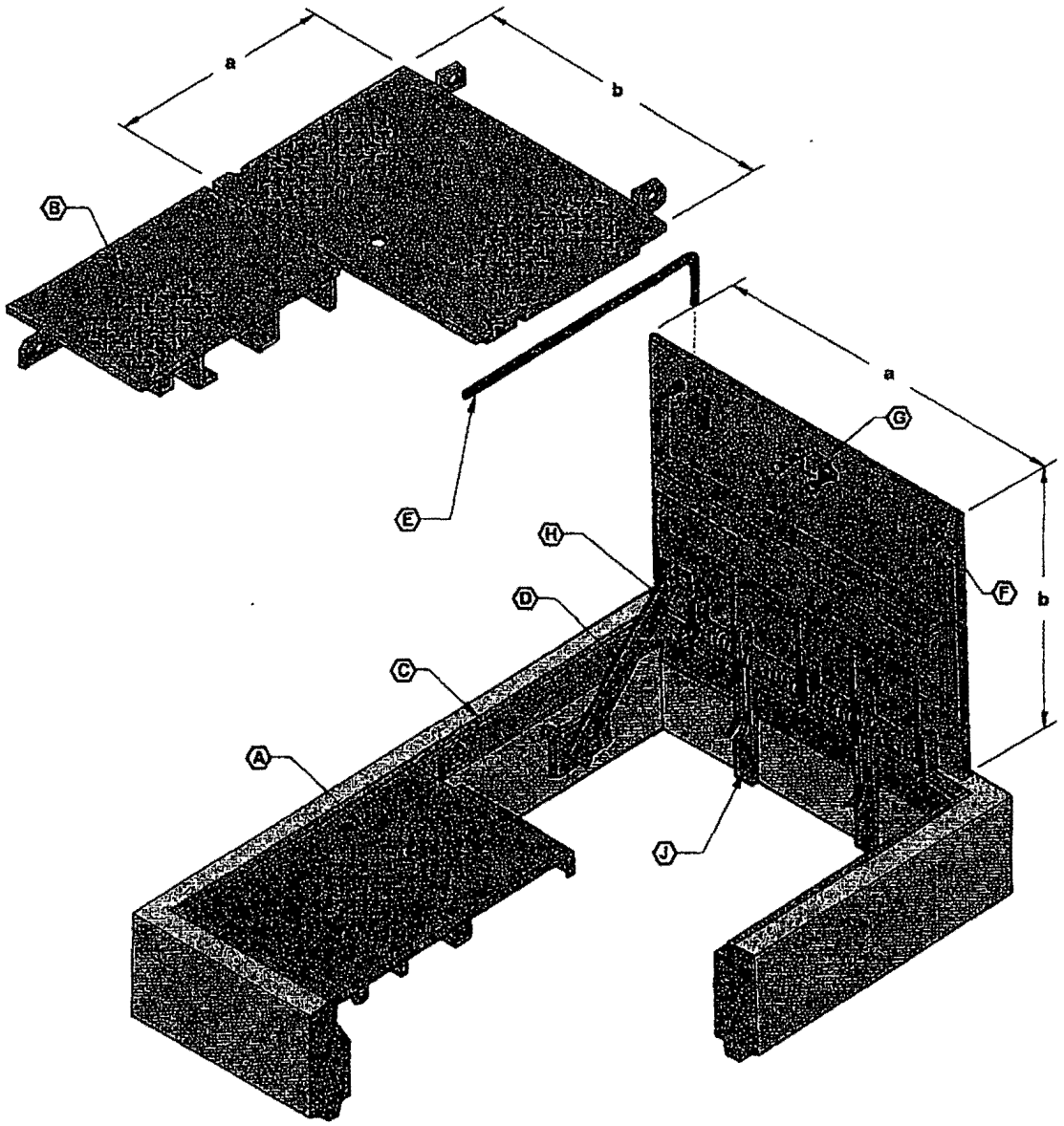

Ⓐ PEDESTRIAN TRAFFIC COVER
Ⓑ VEHICULAR TRAFFIC COVER
Ⓒ ANGLE FRAME
Ⓓ COVER HOLD OPEN ASS'Y*
Ⓔ GUARD BAR & GUARD BAR SOCKET
Ⓕ COVER BOLT DOWN DEVICE*
Ⓖ COVER LIFT DEVICE*
Ⓗ TORSION COIL SPRINGS
Ⓙ STEEL WARE PLATES

■ ILLUSTRATION IS TYPICAL ONLY OF GENERAL SERIES CONFIGURATION: FOR SPECIFIC CONFIGURATION, CALL JENSEN PRECAST.

SERIES NO.	COVER DIM: IN.		1/2 COVER WEIGHTS	
	a	b	Type 11	Type 12
3048	33	23-7/8	55 lbs.	110 lbs.
44	51	23-7/8	128 lbs.	~~135~~ 112
3660	39	29-7/8	75 lbs.	150 lbs.
466	51	38-7/8	200 lbs.	NA
3672	39	35-7/8	145 lbs.	NA

NOTE: NA=NOT AVAILABLE

Traffic

SPRING ASSISTED HINGED COVER CONFIGURATION WITH STYLE ES FRAME

ORG. DWG. DATE 09-12-98

REV. DWG. DATE

JENSEN PRECAST

STYLE ES

4'-0" x 4'-0" FLAT WALL VAULT x 4'-0" DEEP

NOTES:

- CONCRETE DESIGNED IN ACCORDANCE WITH AASHTO H-20-44 TRAFFIC LOADING USING 5,500 P.S.I. [37.92 MPa] COMPRESSIVE STRENGTH CONCRETE AND 60,000 P.S.I. [413.2 MPa] YIELD STRENGTH ASTM A-706 STEEL REINFORCING PER CALCS.
- COVER DESIGNED FOR PARKWAY LOADING @ 300 P.S.F. PER CALCS.
- VAULT TO BE PLACED ON A 6" BASE OF CRUSHER RUN FOR EASE OF INSTALLATION AND EVEN LOAD DISTRIBUTION.

1. 44X-L42-4122549A, 42" LOWER SECTION (R44X-L42-4122549A). WT. 4,725 Lbs.
2. 44X-T6H, 6" TOP SECTION (CG-LOOP4H-44 (475)) CAST-IN GALV (F44-PB-HNG) HINGED FRAME.WT. 700 Lbs.
3. SC44-TGSA, 2 Pc GALV TRAFFIC SPRING ASSISTED COVER. WT. 525 lbs.
7. 4 TON x 4 3/4" GALV. RISS FOR HANDLING. LOCATE AS FOLLOWS: LOWER SECTION (4) CORE MTD., (4) SHELL MTD.; TOP RING SECTION (4) CORE MTD., (4) SHELL MTD.
8. 14" W x 10"H THRU HOLES. LOCATE AS FOLLOWS: LOWER SECTION (2) CORE MTD.

ORDERING INFORMATION:

44XFHH48-4122549A FOR ASSEMBLY AS SHOWN.
TOTAL APPROX. WEIGHT OF ASSEMBLY AS SHOWN 5,950 Lbs.

W.A. RASIC CONSTRUCTION
WHITTIER, CA
S.O.#4122549
(4) UNITS REQ'D.

GENERAL NOTES:

1. Minimum soil bearing capacity is hereby assumed to be 2000 PSF unless otherwise documented by a geotechnical report that shall be provided to Jensen Precast by the end user. Jensen Precast shall not be held responsible for the soil bearing capacity.
2. Installation of Manholes, Vaults, Handholes, Meter Boxes etc. will be as per Jensen installation procedures.
3. Structural modification to the Jensen line of products is not permitted without prior written approval from Jensen Engineering Department.
4. Do not scale the drawings, verify all dimensions including rough openings, if any discrepancies are found, notify the Jensen Engineer immediately.
5. The Jensen Engineer will interpret the intent of the drawings in case of possible conflict or discrepancy.
6. Permissible Variations:
   Dimensional Tolerances – The length, width, height, or dia. measurements of the structure when measured on the inside surfaces shall not deviate form design dimensions by more than the following:

Dimensions:	Tolerance:
0 to 5 Feet	1/4"
5 to 10 Feet	3/8"

   10 to 20 Feet as agreed upon between the supplier and purchaser.
7. Squareness Tolerance:
   he inside of the precast concrete component shall be square as determined by diagonal measurements. The difference between such measurements shall not exceed the following:

Measured Length:	Allowable Difference
0 to 10 Feet	1/2"
10 to 20 Feet	3/4"

   20 Feet and over as agreed upon between the supplier and purchaser.

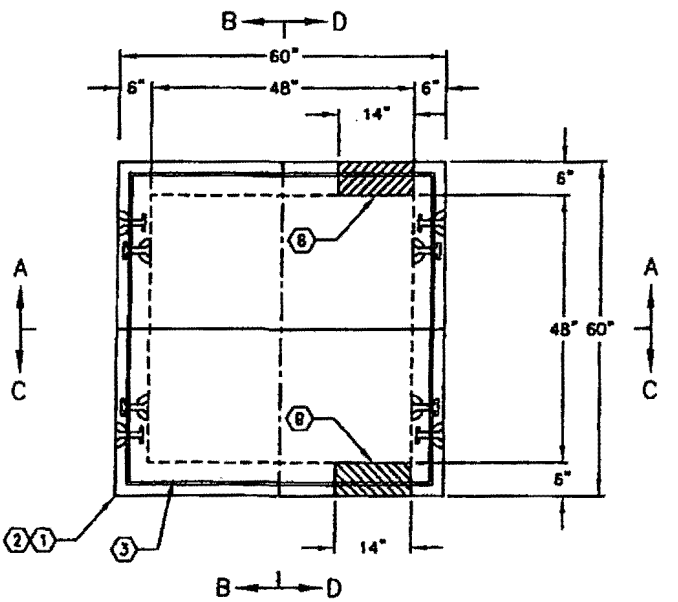

PLAN VIEW

MINIMUM EXCAVATION SIZE:
5'-2" x 5'-2" x DEPTH REQ'D.

JENSEN PRECAST

44XFHH48-4122549A

01-28-08

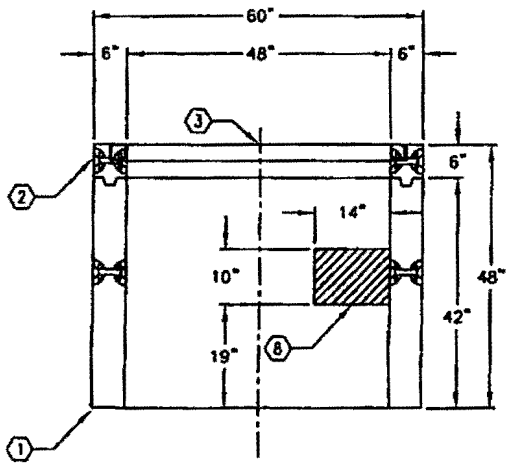

SECTION A–A

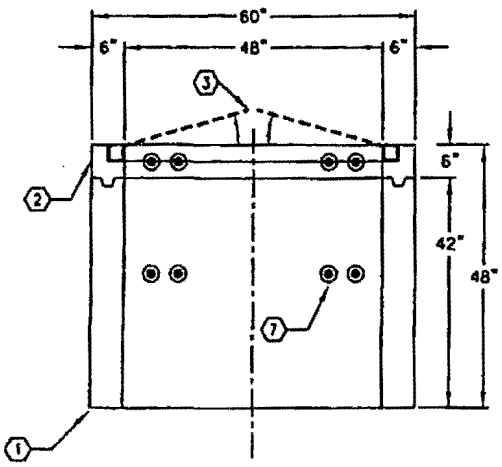

SECTION B–B

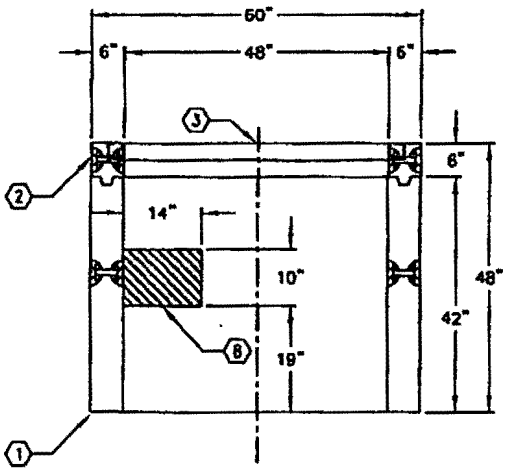

SECTION C–C

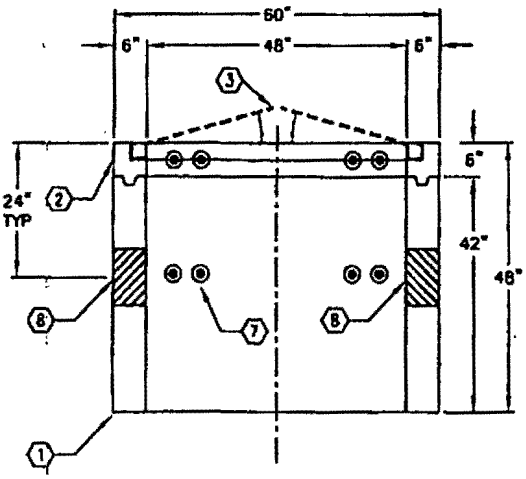

SECTION D–D

JENSEN PRECAST

#	DATE	DESCRIPTION	BY

44XFHH48–4122549A

4'–0" x 4'–0" FLAT WALL VAULT x 4'–0" DEEP

NOTES:

- CONCRETE DESIGNED IN ACCORDANCE WITH AASHTO H–20–44 TRAFFIC LOADING USING 5,500 P.S.I. [37.92 MPa] COMPRESSIVE STRENGTH CONCRETE AND 60,000 P.S.I. [413.2 MPa] YIELD STRENGTH ASTM A–706 STEEL REINFORCING PER CALCS.
- COVER DESIGNED FOR PARKWAY LOADING @ 300 P.S.F. PER CALCS.
- VAULT TO BE PLACED ON A 6" BASE OF CRUSHER RUN FOR EASE OF INSTALLATION AND EVEN LOAD DISTRIBUTION.

1. 44X–L42–4122549B, 42" LOWER SECTION (R44X–L42–4122549B). WT. 4,725 Lbs.
2. 44X–T6H, 6" TOP SECTION (CG–LOOP4H–44 (475)) CAST–IN GALV (F44–PB–HNG) HINGED FRAME.WT. 700 Lbs.
3. SC44–TGSA, 2 Pc GALV TRAFFIC SPRING ASSISTED COVER. WT. 525 lbs.
7. 4 TON x 4 3/4" GALV. RISS FOR HANDLING. LOCATE AS FOLLOWS: LOWER SECTION (4) CORE MTD., (4) SHELL MTD.; TOP RING SECTION (4) CORE MTD., (4) SHELL MTD.
8. 14" W x 10"H THRU HOLES. LOCATE AS FOLLOWS: LOWER SECTION (1) CORE MTD.

ORDERING INFORMATION:

44XFHH48–4122549B FOR ASSEMBLY AS SHOWN.
TOTAL APPROX. WEIGHT OF ASSEMBLY AS SHOWN 5,950 Lbs.

W.A. RASIC CONSTRUCTION
WHITTIER, CA
S.O.#4122549
(1) UNIT REQ'D.

GENERAL NOTES:

1. Minimum soil bearing capacity is hereby assumed to be 2000 PSF unless otherwise documented by a geotechnical report that shall be provided to Jensen Precast by the end user. Jensen Precast shall not be held responsible for the soil bearing capacity.
2. Installation of Manholes, Vaults, Handholes, Meter Boxes etc. will be as per Jensen installation procedures.
3. Structural modification to the Jensen line of products is not permitted without prior written approval from Jensen Engineering Department.
4. Do not scale the drawings, verify all dimensions including rough openings, If any discrepancies are found, notify the Jensen Engineer immediately.
5. The Jensen Engineer will interpret the intent of the drawings in case of possible conflict or discrepancy.
6. Permissible Variations:
   Dimensional Tolerances – The length, width, height, or dia. measurements of the structure when measured on the inside surfaces shall not deviate form design dimensions by more than the following:

Dimensions:	Tolerance:
0 to 5 Feet	1/4"
5 to 10 Feet	3/8"

   10 to 20 Feet as agreed upon between the supplier and purchaser.
7. Squareness Tolerance:
   he inside of the precast concrete component shall be square as determined by diagonal measurements. The difference between such measurements shall not exceed the following:

Measured Length:	Allowable Difference
0 to 10 Feet	1/2"
10 to 20 Feet	3/4"

   20 Feet and over as agreed upon between the supplier and purchaser.

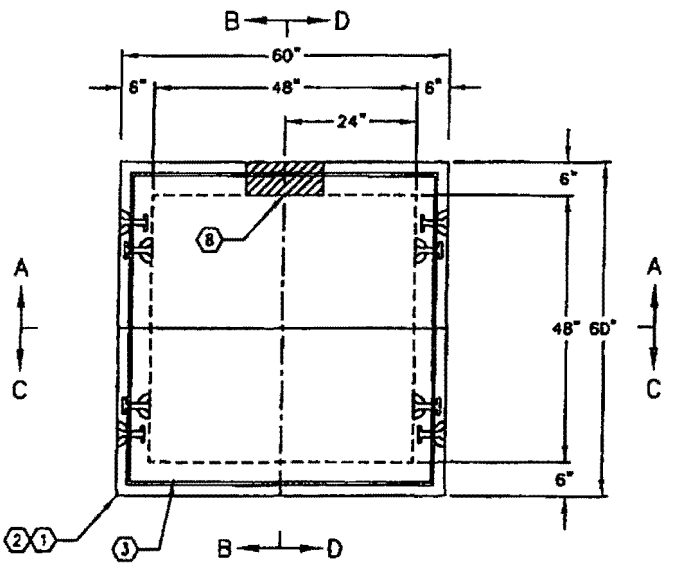

PLAN VIEW

MINIMUM EXCAVATION SIZE:
5'-2" x 5'-2" x DEPTH REQ'D.

JENSEN PRECAST

44XFHH48–4122549B

01–28–08

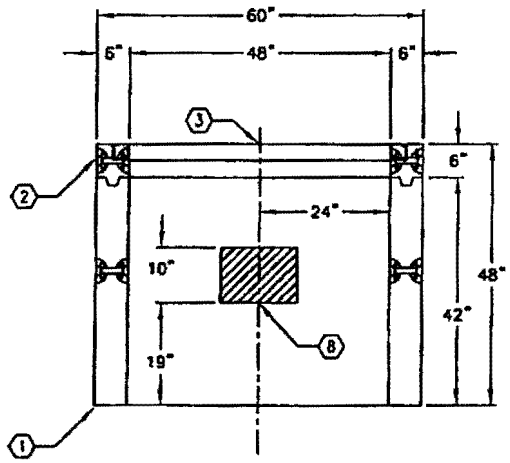

SECTION A–A

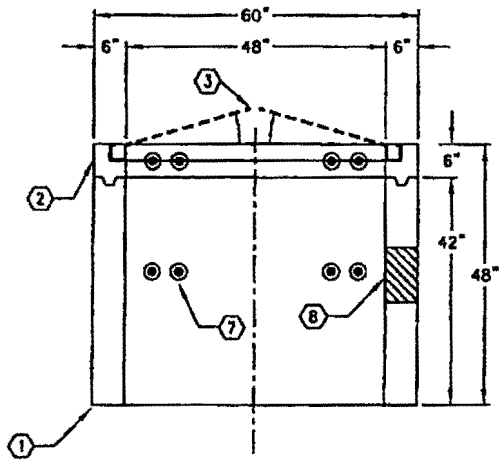

SECTION B–B

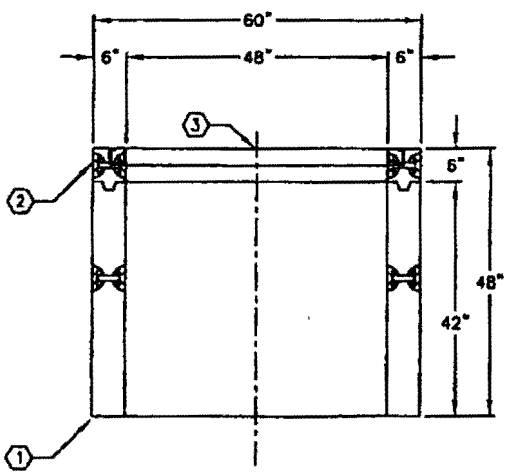

SECTION C–C

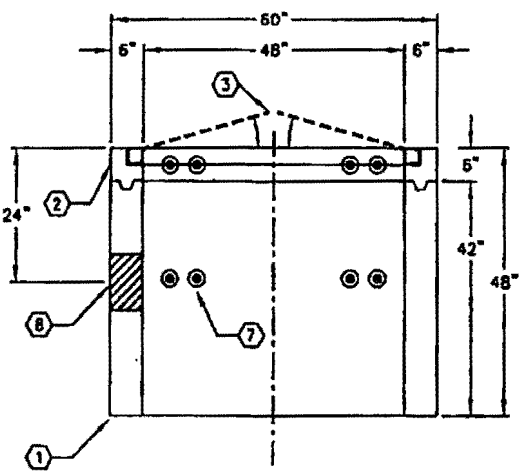

SECTION D–D

JENSEN PRECAST

#	DATE	DESCRIPTION	BY

44XFHH48-4122549B

4'-0" x 4'-0" FLAT WALL VAULT x 4'-0" DEEP

NOTES:

- CONCRETE DESIGNED IN ACCORDANCE WITH AASHTO H-20-44 TRAFFIC LOADING USING 5,500 P.S.I. [37.92 MPa] COMPRESSIVE STRENGTH CONCRETE AND 60,000 P.S.I. [413.2 MPa] YIELD STRENGTH ASTM A-706 STEEL REINFORCING PER CALCS.
- COVER DESIGNED FOR PARKWAY LOADING @ 300 P.S.F. PER CALCS.
- VAULT TO BE PLACED ON A 6" BASE OF CRUSHER RUN FOR EASE OF INSTALLATION AND EVEN LOAD DISTRIBUTION.

1. 44X-L40-4122549A, 40" LOWER SECTION (R44X-L40-4122549A). WT. 4,500 Lbs.
2. 44X-T8-4122549, 8" TOP SLAB (R-44X-T8-4122549) CAST-IN USF THS 36" x 36" FRAME.WT. 1,600 Lbs.
3. USF THS 36" x 36" ALUMINUM OCCASIONAL TRAFFIC SPRING ASSISTED COVER.
7. 4 TON x 4 3/4" GALV. RISS FOR HANDLING. LOCATE AS FOLLOWS: LOWER SECTION (4) CORE MTD., (4) SHELL MTD.; TOP SLAB (4) SURFACE MTD.
8. 14" W x 10"H THRU HOLES. LOCATE AS FOLLOWS: LOWER SECTION (2) CORE MTD.

ORDERING INFORMATION:

44XFV48-4122549A FOR ASSEMBLY AS SHOWN.
TOTAL APPROX. WEIGHT OF ASSEMBLY AS SHOWN 6,100 Lbs.

W.A. RASIC CONSTRUCTION
WHITTIER, CA
S.O.#4122549
(4) UNITS REQ'D.

GENERAL NOTES:

1. Minimum soil bearing capacity is hereby assumed to be 2000 PSF unless otherwise documented by a geotechnical report that shall be provided to Jensen Precast by the end user. Jensen Precast shall not be held responsible for the soil bearing capacity.
2. Installation of Manholes, Vaults, Handholes, Meter Boxes etc. will be as per Jensen installation procedures.
3. Structural modification to the Jensen line of products is not permitted without prior written approval from Jensen Engineering Department.
4. Do not scale the drawings, verify all dimensions including rough openings, If any discrepancies are found, notify the Jensen Engineer immediately.
5. The Jensen Engineer will interpret the intent of the drawings in case of possible conflict or discrepancy.
6. Permissible Variations:
   Dimensional Tolerances – The length, width, height, or dia. measurements of the structure when measured on the inside surfaces shall not deviate form design dimensions by more than the following:

Dimensions:	Tolerance:
0 to 5 Feet	1/4"
5 to 10 Feet	3/8"

   10 to 20 Feet as agreed upon between the supplier and purchaser.
7. Squareness Tolerance:
   he inside of the precast concrete component shall be square as determined by diagonal measurements. The difference between such measurements shall not exceed the following:

Measured Length:	Allowable Difference
0 to 10 Feet	1/2"
10 to 20 Feet	3/4"

   20 Feet and over as agreed upon between the supplier and purchaser.

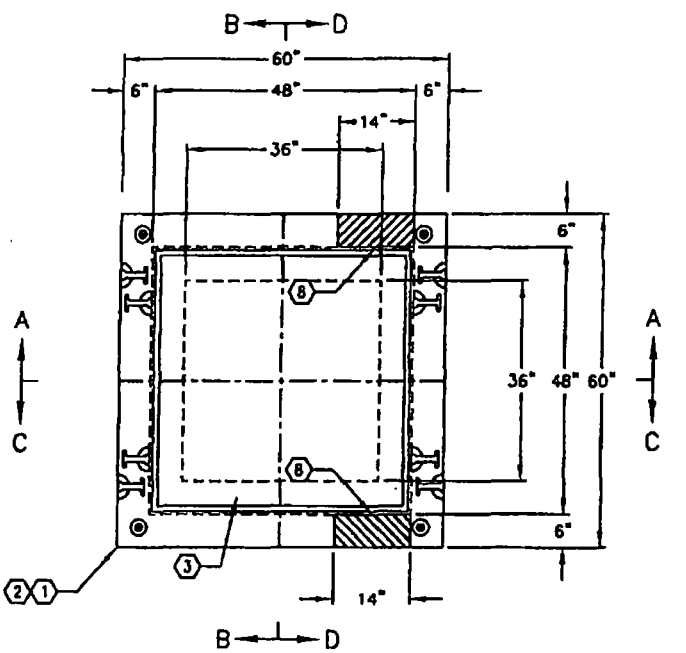

PLAN VIEW

MINIMUM EXCAVATION SIZE:
5'-2" x 5'-2" x DEPTH REQ'D.

JENSEN PRECAST

44XFV48-4122549A

01-28-08

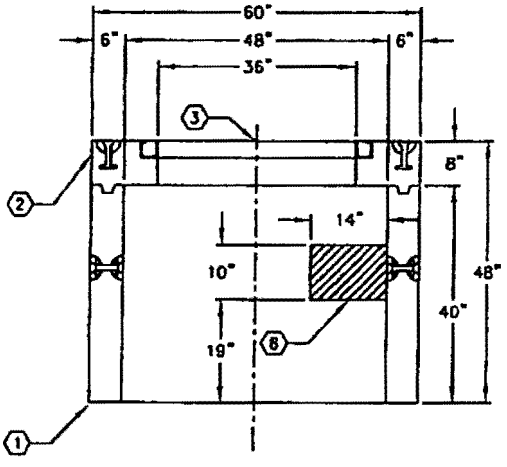

SECTION A–A

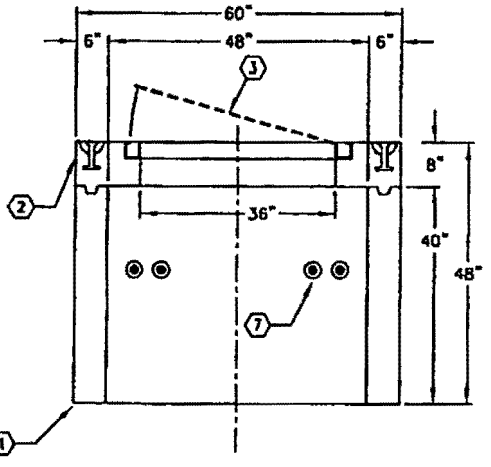

SECTION B–B

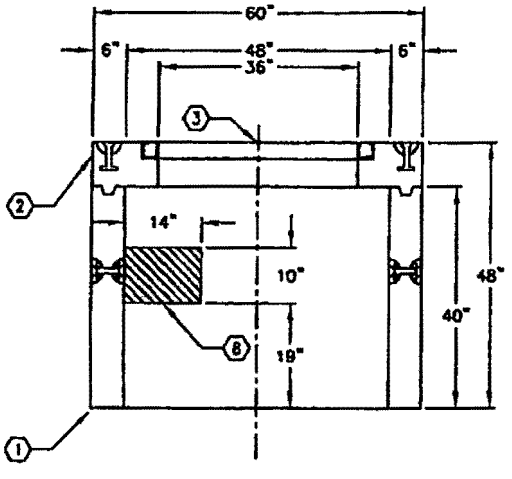

SECTION C–C

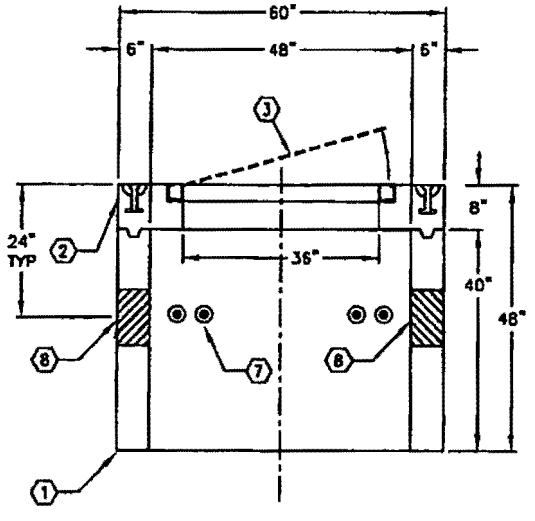

SECTION D–D

JENSEN PRECAST

#	DATE	DESCRIPTION	BY

44XFV48–4122549A

4'-0" x 4'-0" FLAT WALL VAULT x 4'-0" DEEP

NOTES:

- CONCRETE DESIGNED IN ACCORDANCE WITH AASHTO H-20-44 TRAFFIC LOADING USING 5,500 P.S.I. [37.92 MPa] COMPRESSIVE STRENGTH CONCRETE AND 60,000 P.S.I. [413.2 MPa] YIELD STRENGTH ASTM A-706 STEEL REINFORCING PER CALCS.
- COVER DESIGNED FOR PARKWAY LOADING @ 300 P.S.F. PER CALCS.
- VAULT TO BE PLACED ON A 6" BASE OF CRUSHER RUN FOR EASE OF INSTALLATION AND EVEN LOAD DISTRIBUTION.

1. 44X-L40-4122549B, 40" LOWER SECTION (R44X-L40-4122549B). WT. 4,500 Lbs.
2. 44X-T8-4122549, 8" TOP SLAB (R-44X-T8-4122549) CAST-IN USF THS 36" x 36" FRAME.WT. 1,600 Lbs.
3. USF THS 36" x 36" ALUMINUM OCCASIONAL TRAFFIC SPRING ASSISTED COVER.
7. 4 TON x 4 3/4" GALV. RISS FOR HANDLING. LOCATE AS FOLLOWS: LOWER SECTION (4) CORE MTD., (4) SHELL MTD.; TOP SLAB (4) SURFACE MTD.
8. 14" W x 10"H THRU HOLES. LOCATE AS FOLLOWS: LOWER SECTION (1) CORE MTD.

ORDERING INFORMATION:

44XFV48-4122549B FOR ASSEMBLY AS SHOWN.
TOTAL APPROX. WEIGHT OF ASSEMBLY AS SHOWN 6,100 Lbs.

W.A. RASIC CONSTRUCTION
WHITTIER, CA
S.O.#4122549
(4) UNITS REQ'D.

GENERAL NOTES:

1. Minimum soil bearing capacity is hereby assumed to be 2000 PSF unless otherwise documented by a geotechnical report that shall be provided to Jensen Precast by the end user. Jensen Precast shall not be held responsible for the soil bearing capacity.
2. Installation of Manholes, Vaults, Handholes, Meter Boxes etc. will be as per Jensen installation procedures.
3. Structural modification to the Jensen line of products is not permitted without prior written approval from Jensen Engineering Department.
4. Do not scale the drawings, verify all dimensions including rough openings, if any discreponcies are found, notify the Jensen Engineer immediately.
5. The Jensen Engineer will interpret the intent of the drawings in case of possible conflict or discrepancy.
6. Permissible Variations:
   Dimensional Tolerances - The length, width, height, or dia. measurements of the structure when measured on the inside surfaces shall not deviate form design dimensions by more than the following:

Dimensions:	Tolerance:
0 to 5 Feet	1/4"
5 to 10 Feet	3/8"

   10 to 20 Feet as agreed upon between the supplier and purchaser.
7. Squareness Tolerance:
   he inside of the precast concrete component shall be square as determined by diagonal measurements. The difference between such measurements shall not exceed the following:

Measured Length:	Allowable Difference
0 to 10 Feet	1/2"
10 to 20 Feet	3/4"

   20 Feet and over as agreed upon between the supplier and purchaser.

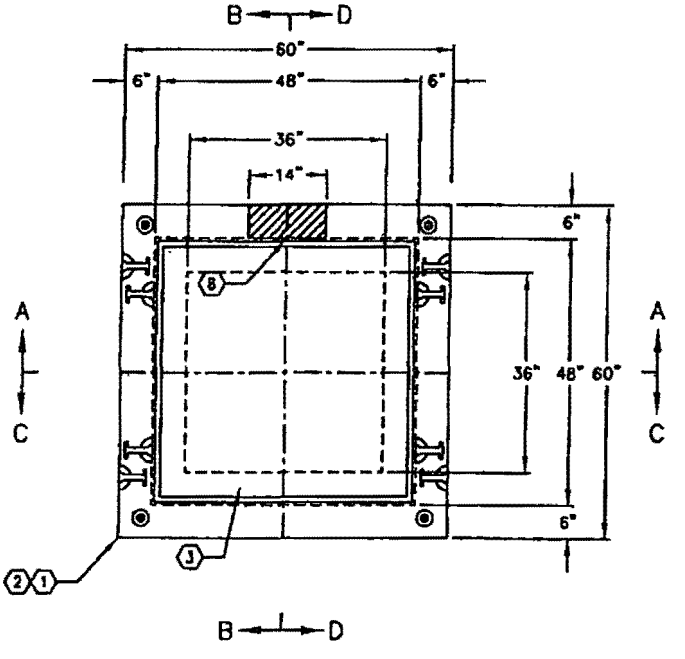

PLAN VIEW

MINIMUM EXCAVATION SIZE:
5'-7" x 5'-7" x DEPTH REQ'D.

JENSEN PRECAST

44XFV48-4122549B

01-28-08

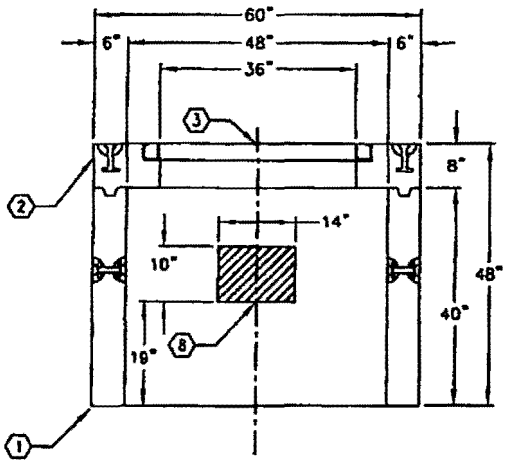

SECTION A–A

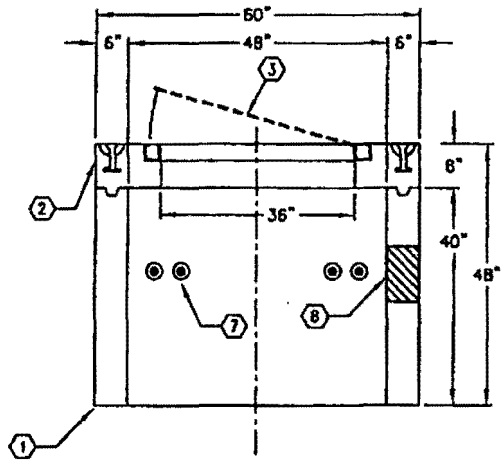

SECTION B–B

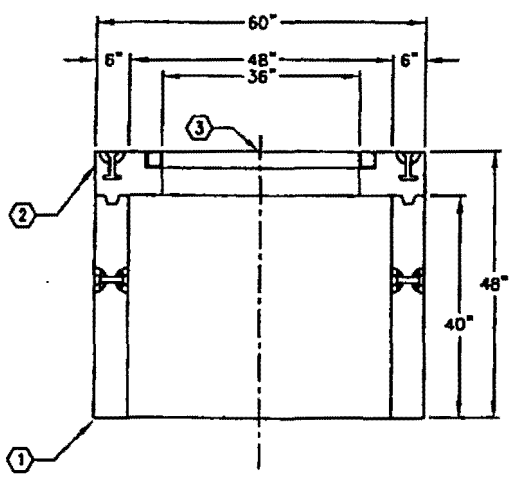

SECTION C–C

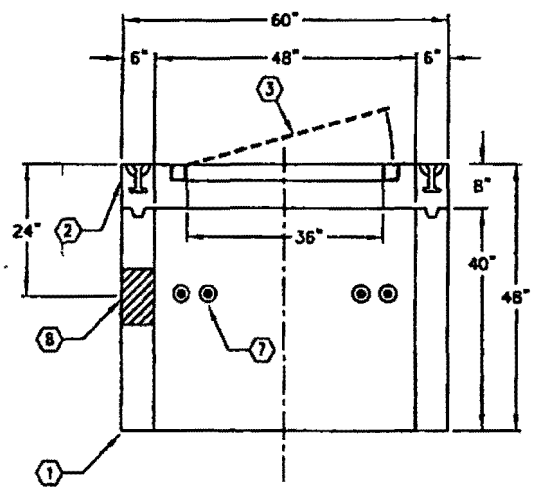

SECTION D–D

JENSEN PRECAST

#	DATE	DESCRIPTION	BY

44XFV48–4122549B

TROUGH FRAME, HEAVY-DUTY, SINGLE DOOR

ALUMINUM

The heavy-duty trough type floor access door with drainable frame is designed for interior and exterior applications where dirt and water are to be prevented from falling into the area below. It is designed for off-street locations that may occasionally receive AASHTO H-20-44 wheel loads.

SPECIFICATIONS: The floor access door shall be Model THS as manufactured by U.S.F. Fabrication, Inc. with the size being specified on the plans. Door leaf shall be 1/4-inch thick aluminum diamond plate reinforced for an AASHTO H-20-44 wheel load. Upon request, manufacturer shall provide structural calculations showing that the door design meets the loading requirements of AASHTO H20-44. (The floor access door is designed for off-street locations that may occasionally receive AASHTO H-20-44 wheel loads.) The frame shall be extruded aluminum trough section with an integral anchor flange on all four sides. The frame shall include an EPDM odor reduction gasket that reduces the amount of odor that escapes from below the door and a 1 1/2-inch threaded drain coupling. The floor access door shall be equipped with a lifting handle that does not protrude above the cover, and a 316 stainless steel hold open arm with red vinyl grip that automatically keeps the cover in its upright, open position. The door shall have 316 stainless steel hinges and 316 stainless steel tamper resistant bolts/locknuts. The door shall have stainless steel open horizontal springs to assist in opening the cover and reducing the force during closing. The door shall be equipped with a watertight 316 stainless steel slamlock with threaded plug, removable outside key, and fixed inside handle. The slamlock latches onto a 316 stainless steel striker plate that is bolted to the frame. All parts of the frame in contact with concrete shall have a coating of bituminous paint. An adhesive backed vinyl material that protects the product during shipping and installation shall cover the entire top of the frame and cover. Installation shall be in accordance with the manufacturer's attached instructions. The entire frame including the seat on which the reinforcing rests shall be supported by concrete or other material designed to support the specified load. The door shall be manufactured and assembled in the United States. Manufacturer shall guarantee the door against defects in materials and workmanship for a period of ten years.

OPTIONAL FEATURES

- Enclosed, stainless steel horizontal springs for easy opening, see page 81
- Recessed staple and other locking devices, see page 78
- Frame skirts for easy casting into a concrete top slab, see page 78
- Debris gasket, see page 79
- Fiberglass insulation with metal liner, see page 80
- Custom lettering, see page 79
- Nut rails with stainless steel sliding nuts for attaching cable holders, brackets & other hardware, see page 85
- Anodized finish, see page 80
- Stainless steel safety chains with aluminum support posts, see page 80
- Fall Through Prevention Systems, see pages 82-83
- Slip resistant surface bonded to cover plate, see page 80
- Side drain coupling (instead of standard bottom drain)

H-20 LOADING*								
MODEL	COVER THK	FRAME OPENING**		CLEAR OPENING***		OVERALL SIZE		WEIGHT
	A in. (mm)	A in. (mm)	B in. (mm)	C in. (mm)	D in. (mm)	E in. (mm)	F in. (mm)	Lbs. (KG)
THS	1/4 (6)	24 (610)	24 (610)	24 (610)	24 (610)	36 (914)	32 (813)	84 (38)
THS	1/4 (6)	24 (610)	36 (914)	24 (610)	36 (914)	36 (914)	44 (1118)	112 (51)
THS	1/4 (6)	30 (762)	30 (762)	30 (762)	30 (762)	42 (1067)	38 (965)	111 (50)
THS	1/4 (6)	30 (762)	36 (914)	30 (762)	36 (914)	42 (1067)	44 (1118)	128 (58)
THS	1/4 (6)	30 (762)	48 (1219)	30 (762)	48 (1219)	42 (1067)	56 (1422)	164 (74)
→ THS	1/4 (6)	36 (914)	36 (914)	35 (889)	36 (914)	48 (1219)	44 (1118)	150 (68)

* Weight shown is of our standard hatch only, and does not include any optional features. **Also referred to as "Actual Opening" which can vary to suit application. ***Also referred to as "Concrete Opening" when door is cast into concrete. ****THS Aluminum floor access doors are intended for off-street locations that may occasionally receive AASHTO H-20-44 wheel loads (16,000 lbs. over 10" x 20" area + 30% impact factor). **For parking lot applications, see P-AHS and P-AHD (pages 62 to 65). For direct traffic applications, see steel DT-AHS and DT-AHD (pages 66 to 69). For other direct traffic applications, see cast iron frames & covers (pages 74 to 75).**

CUSTOM SIZES READILY AVAILABLE

We reserve the right to modify specifications and drawings without prior notice.

U.S. FABRICATION, INC.

ALUMINUM

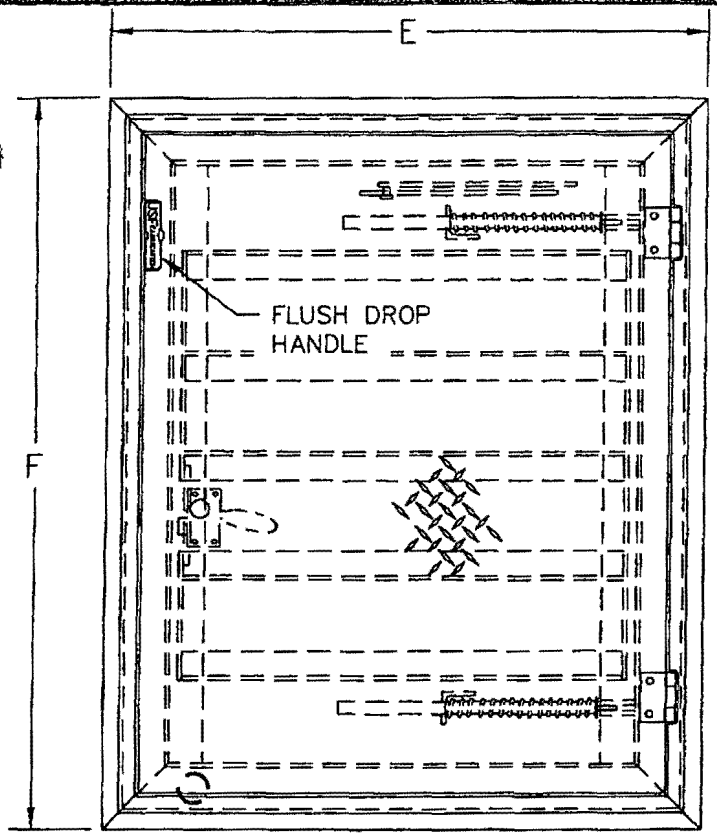

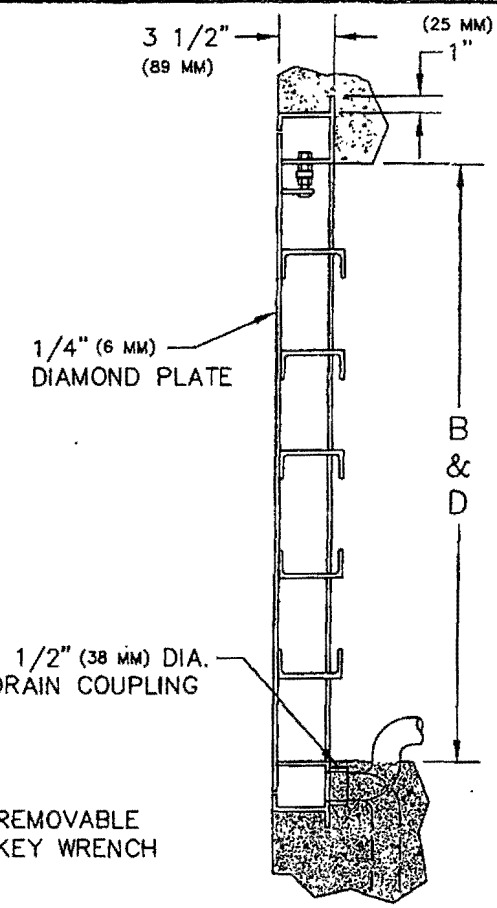

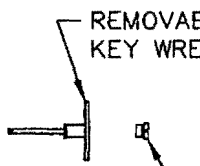

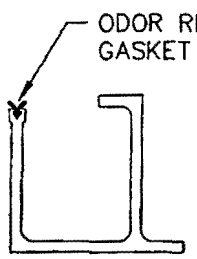

1/4" EXTRUDED TROUGH SECTION
W/INTEGRAL CONTINUOUS ANCHOR
FLANGE & GROOVE FOR GASKET
FRAME MAT'L: ALUMINUM 6063–T5

FRAME DETAIL

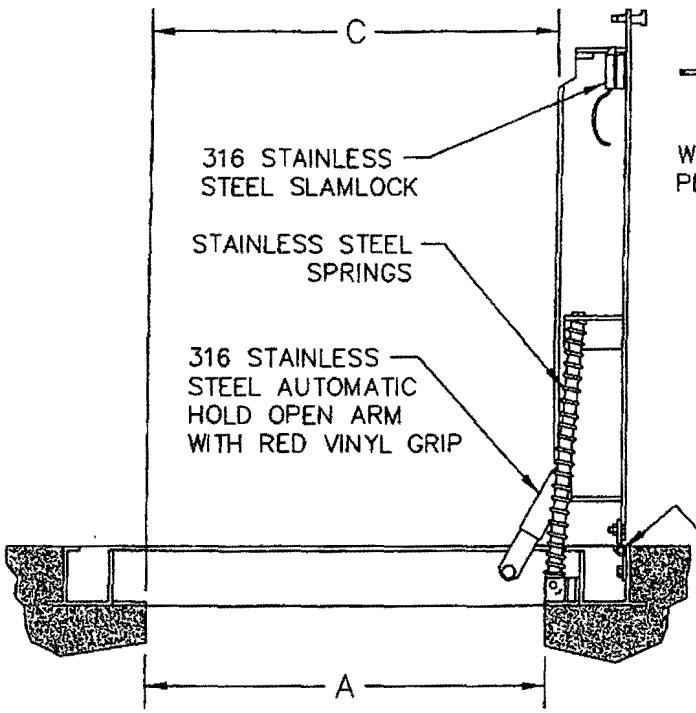

NOTE:
- MATERIAL: ALUMINUM WITH STAINLESS STEEL SPRINGS, 316 STAINLESS STEEL NUTS & BOLTS, HINGES, AND HOLD OPEN ARM.
- LOADING: DESIGNED FOR OFF-STREET LOCATIONS WHICH MAY OCCASIONALLY RECEIVE H-20 WHEEL LOADS.
- BITUMINOUS COATING IS APPLIED TO AREA OF FRAME IN CONTACT WITH CONCRETE.

OPTIONAL FEATURES

☐ RECESSED STAPLE FOR PADLOCK
☐ OTHERS (SEE PAGE 18): _____

U.S. FABRICATION, INC.
HIALEAH, FLORIDA

THS 36" (A) X 36" (B)

Owner's Manual

Models:1 1/2XT33
2XH5
2X11

OPERATION AND MAINTENANCE OF SUBMERSIBLE PUMPS

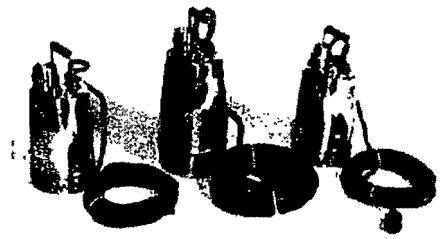

Replacement Parts List

Ref. No.	Description	Part Number for Models: 1½XT33	2XH5	2X11	Qty.
01	Strainer w/bottom plate	26816-617	26816-617	26816 517	1
05	Impeller XCI	26816-602	26816-002	26816-502	1
07	Impeller housing/Suction cover	26816-601	26816-601	26816-501	1
07-1	O-ring	†	†	†	1
08	Oil chamber cover	N/A	N/A	N/A	
08-1	Gasket	†	†	†	1
09	Lip seal Buna N	26816-007	26816-007	26816-507	1
10	Shaft sleeve	26816-339	26816-339	26816 539	1
13	Mechanical shaft seal dual (low sil/ceram, up ceram/carb)	26816-003	26816 003	26816-503	1
14	Ball bearing (lower)	*	*	*	1
16	Casing (outer)	26816 611	26816-611	26816-511	1
16-1	O-ring	†	†	†	1
17	Rotor	N/A	N/A	N/A	
18	Stator	N/A	N/A	N/A	
20	Ball bearing (upper)	*	*	*	1
21A	Oil chamber	N/A	N/A	N/A	
21A-1	O-ring	†	†	†	1
21B	Motor cover (upper)	N/A	N/A	N/A	
21B-1	O ring	†	†	†	1
23	Overload	N/A	N/A	N/A	
24	Capacitor	N/A	N/A	N/A	
26	Pump cover (top)	26816-614	26816-614	26816-514	1
26-1	Gasket	†	†	†	1
27	Power cable w/gland	26816-015	26816-015	26816-215	1
27-1	Gasket	†	†	†	1
31E	Ground wire w/ terminal	N/A	N/A	N/A	
32	Clip	26816-020	26816-020	26816-020	1
34	Handle	26816-521	26816-521	26816-521	1
35	Rod bolt	N/A	N/A	N/A	
38	Pipe nipple	26816-622	26816-022	26816-022	1
38-F	Discharge flange assembly	26816-609	26816-509	26816-509	1
50-01	Screw	*	*	*	3
50-07	Screw	*	*	*	3
50-08	Screw	*	*	*	3
50-11	Screw w/o ring	†	†	†	1
50-16	Screw	*	*	*	1
50-27	Screw	*	*	*	2
50 31E	Screw	*	*	*	1
50 32	Screw	*	*	*	1
50 34	Screw	*	*	*	2
50-38N	Nut	*	*	*	2
50-38W	Washer	*	*	*	2
1	Gasket kit - Buna N (includes Ref Nos 07-1, 08 1, 16 1 21A 1, 21B-1, 26 1, 27-1, 50 11)	26816 616	26816 616	26816 516	1
	Float switch, piggyback	55-930	55-930	55 950	1

(*) Standard hardware item, available locally

Illustrations

1 1/2XT33	33 HP	115V 1P	60 HZ
2XH5	5 HP	115V 1P	60 HZ
2X11	1 HP	115V 1P	60 HZ

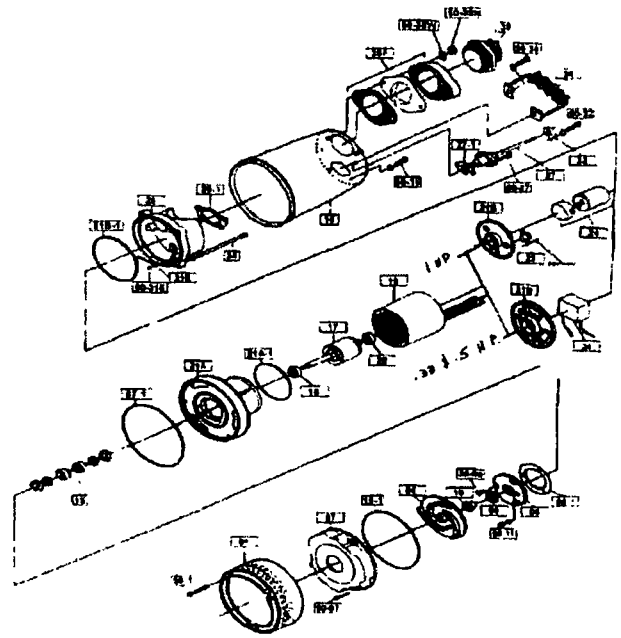

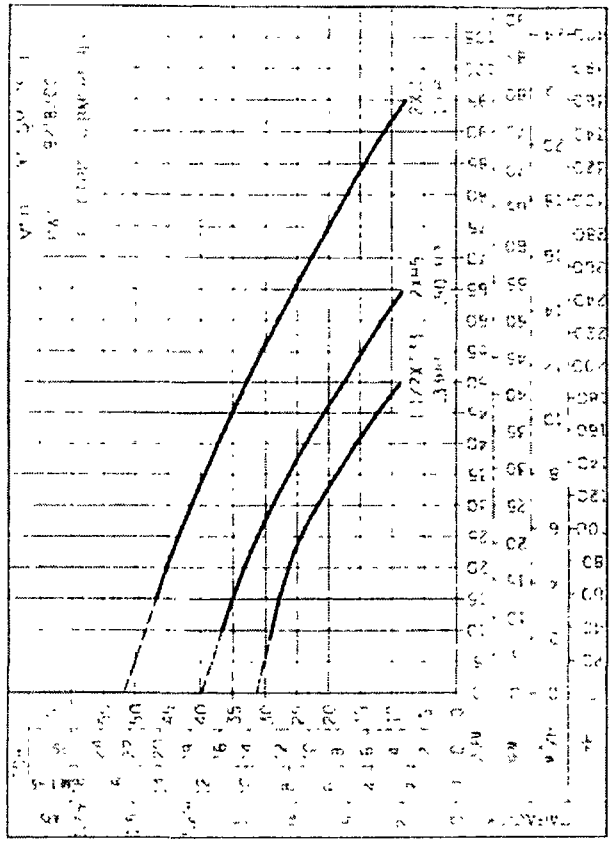

INSTALLATION & OPERATING INSTRUCTIONS SUBMERSIBLE PUMPS

START-UP DESCRIPTION: Check that the voltage of the power supply is the same as that marked on the pump. When permanently installing the pump in a sump for example, make sure that the holding capacity of the sump is commensurate with the capacity of the pump. If the sump is too small, the pump will stop and start too often resulting in damage to the pump. Recommended maximum start-ups per hour is 6. If used with a hose, check that no kinks or restrictions are present.

ELECTRICAL CONNECTION: Check that the power is off and the line is disconnected before working on any pump.

Warning: Always disconnect power before undertaking any work on a pump, cable, control box or accessories.

HANDLING: Never lift a pump by its power cord. Always lift the pump by its handle or attach a rope or wire cable to the handle or lifting rings. Lifting by the power cord can cause dangerous electrical shorts or pump failure.

PLACING THE PUMP: Never place the pump on a loose or soft bottom. It could sink in and fill the pump housing with material, blocking water flow to the impeller. Install the pump on a solid bottom or hang the pump by a wire. If the pump is hung by a wire, it will have to be restricted from twisting during start-up. This can be done by securing the pump to one side of the sump. Stop and starts not to exceed 6 times per hour, make sure to size the pump according to sump size and water inflow.

LIQUID TEMPERATURE: The temperature of the water must not exceed 120 degrees Fahrenheit.

SUBMERSION DEPTH: The maximum depth is 33 ft. (10m) or the length of the factory installed electrical cable, whichever is less. If the initial start depth in water is less than 3 inches, the pump must be primed.

COLD WEATHER: The pump will not freeze as long as it is submerged and in operation. If it is removed from the liquid, empty the pump, clean it and dry it. Then store it in a place where the temperature is not below 32 degrees Fahrenheit (0 Celsius). If the pump has been exposed to freezing temperatures, let it thaw slowly before it is started again. Never thaw using flame or similar methods as o-rings and other materials may be damaged.

TROUBLES AND THEIR CURES

GENERAL

1. Not starting:
   a. Check the power supply, testing both voltage and amps.
   b. Check any fuses and switches.
   c. Check the cable, contactor and all connections. Test for continuity. Also test the stator for turn fault and insulation to ground.
   d. Make sure that the impeller is clean and rotating freely.

Important: When trouble shooting always follow local, state, and federal regulations regarding procedures and safety. If the pump still does not start, please contact the closest available recommended repair shop.

2. Low Capacity or Low Head: The cause can be clogged passages, for example the strainer, a damaged or worn impeller or pump housing, broken pipes, damaged or kinked hoses or discharge pipe or too long or too narrow a hose.

3. Water in the stator housing: If water is found in the stator housing, the pump must be dismantled for a complete overhaul and the stator dried out. Probable causes: Damaged worn shaft seals or bad o-rings (Check inl housing for water contamination). Change seals. Damaged cable entrance (change).

4. Water in the oil housing: Problem can be worn or damaged oil lipseal and mechanical

seals - change if needed, or leaking inspection plug or oilhouse cover - change elastomers

REPAIR AND MAINTENANCE INSTRUCTIONS MODELS [illegible]

Follow the instructions on all tags, label and decals attached to the pump.

WARNING

Before attempting to open or service the pump:

1. Familiarize yourself with this manual.
2. Unplug the pump power cable to ensure that the pump will remain inoperative.
3. Allow the pump to completely cool if overheated.
4. Do not attempt to lift the pump by the power cable or piping. Attach proper lifting equipment to the handle on the pump.
   a. Select a suitable location, preferably indoors, to perform the degree of maintenance required.

If the motor housing is to be opened, the work must be done in a clean, well-equipped shop. All maintenance functions must be done by qualified personnel.

WARNING

Obtain the services of a qualified electrician to service the electrical components of this pump.

Complete disassembly procedures for the pump motor are not included in this manual. Instructions are provided only for replacement of pump end components, the pump power cable and capacitor. If the pump fails to run and motor problems are suspected, contact the factory for motor service.

PUMP END DISASSEMBLY

1. To remove the strainer screen, lay the pump on its side, disengage the hardware, and remove the strainer. If the impeller is clogged, the debris can usually be removed without further disassembly.

2. Remove the machine screws and separate the suction cover and suction cover o-ring.

Immobilize the shaft by inserting a large flat-blade screwdriver into the slot in the end of the shaft. Strike the impeller in a counterclockwise direction with a soft-faced mallet or wood block and hammer until loose and remove.

3. SEAL REMOVAL. Remove the oil cavity drain screw and o-ring and drain the oil from the seal cavity. Remove the machine screws and use a pair of flat head screwdrivers to pry the oil chamber cover and oil seal off the shaft as a unit. Remove the oil chamber gasket. Invert the oil chamber cover and remove the lower seal stationary element and seat from the cover. With the oil chamber cover inverted, press the oil seal out of the oil chamber cover from the back side. Lubricate the seal area of the rotor shaft, and slide the rotating portion of both the lower and upper seal assemblies off the shaft.

To remove the stationary portion of the upper seal assembly, slide two stiff wires with hooked ends along the shaft and hook the stationary seat and element from the back side. Pull the stationary portion of the seal from the bore of oil chamber. Stuff a clean tissue into the stationary seal seat bore or wrap a small rag around the shaft to prevent contamination of the motor cavity. If no further disassembly is required, proceed with the appropriate **pump end reassembly** procedures for your specific pump.

4. POWER CABLE REMOVAL. With the strainer and suction cover removed, remove the discharge flange assembly. Remove the handle. Remove the power cable clip from the outer pump casing. Remove the hardware securing the cable gland to the pump casing. Pull the outer pump casing up off the motor, feeding the cable gland down through the hole in the casing as the casing is removed. Remove the holding rods and lockwashers securing the motor top cover to the stator casing.

Raise the motor top cover to expose the power cable leads and capacitor. Remove the connectors from the power cable leads and remove the power cable and inner power cable

gland gasket. It is not necessary to remove the ground wire unless replacement is required. To remove the overload and the motor cover grommet, disengage the machine screws. Use caution not to allow the motor leads for the capacitor to slip down into the motor. If the capacitor requires replacement, remove the shrink tubing (not shown) and separate the capacitor leads from the stator leads.

5. POWER CABLE INSTALLATION.

Note: *Reuse of old o-rings or gaskets may result in premature leakage or reduced pump performance. It is strongly recommended that new o-rings and gaskets be used during reassembly, (see the parts lists for the o-ring/gasket kit part number.*

If the capacitor was removed, feed the motor leads for the capacitor and overload through the new grommet and install the grommet in the hole in the upper motor cover. Connect the wires for the overload to those in the motor, and secure the overload with the machine screws. Slide a piece of heat shrink tube (not shown) over the capacitor leads. Connect the leads on the capacitor to the capacitor leads from the motor. Slide the heat shrink tubing down over the connections and use a heat gun to shrink the tubing and seal the connections.

If the ground wire was removed, secure a new wire to the motor top cover with the machine screw. Slide the gland end of the power cable down through the outer pump casing. Install a new outer power cable gland gasket against the power cable gland. Push the power cable leads through a new inner power cable gland gasket and down through the hole in the pump top cover. Connect the ground wire and stator leads to the power cable leads with the wire connectors.

WARNING

THE GREEN GROUND LEAD ON THE POWER CABLE MUST BE CONNECTED TO THE GREEN LEAD GROUNDED TO THE MOTOR TOP COVER. FAILURE TO GROUND THE POWER CABLE OR MISS WIRING OF THE GROUND LEAD COULD DAMAGE THE PUMP AND/OR CAUSE SERIOUS INJURY OR DEATH TO PERSONNEL.

Carefully fold the capacitor and power cable leads under the pump top cover and secure the cover to the stator casing with the holding rods and lockwashers. **Make sure** the cable leads are not pinched under the pump top cover. Position the inner power cable gland gasket over the flange on the motor top cover. Slide the outer pump casing down over the motor and over the motor top cover flange. Secure the pump casing to the motor top cover with one of the capscrews and lockwashers. Carefully compress the power cable leads into the motor top cover and secure the power cable gland to the cover with the machine screws. Install the cable clip, flange assembly and handle.

6. PUMP END ASSEMBLY. It is **strongly** recommended that all seals and gaskets be replaced any time the pump is disassembled. Thoroughly clean all reusable parts. Remove all o-rings and gaskets, and clean the sealing surfaces of dirt or gasket material. Be careful not to scratch gasket surfaces. Inspect the rotor shaft for damaged threads, scoring, or nicks.

Remove nicks and burrs with a fine file or emery cloth to restore original contours. The shaft seal assembly should not be reused because wear patterns on the finished faces cannot be realigned during reassembly. This could result in premature failure. If any components are worn, replace the complete seal; **never mix old and new seal parts**. Handle a new seal with extreme care to prevent damage. Be careful not to contaminate the precision finished faces. Clean the rotor shaft and seal cavity area. Be sure the area is dry and free of lint and dirt. Check the seal bore for burrs or nicks that might prevent a good seal. Apply a **light** coating of oil to the bore.

When pressing seal components onto the shaft, use hand pressure only. Ensure that the upper stationary element is subassembled into the stationary cup seal. Position this subassembly

in the oil chamber bore with the sealing face up, and cover the seal face with a clean, lint-free cloth. Use your thumbs to press the assembly into the bore. Apply equal pressure on opposite sides until the seat contacts the bore shoulder. Remove the tissue and inspect the seal face to ensure that it is clean and dry. If cleaning is necessary, use a clean lint-free cloth to wipe **lightly** in a concentric pattern. Be certain the seal face of the upper rotating element is free of grit or surface damage and that it is clean and dry. Apply a **light** coating of oil to the seal seating surface on the shaft and the I.D. of the bellows. Apply a drop of oil to the seal face. Slide the rotating portion of the upper seal assembly onto the lubricated shaft. Apply firm, steady pressure on the seal retainer until the seal slides onto the shaft and the upper seal faces contact.

Repeat the above procedure for the rotating portion of the lower seal assembly, making sure to position the lower seal back-to-back against the upper seal. Position the oil chamber cover with the motor side up. Ensure that the lower seal stationary element is subassembled in the stationary cup seat. Position this subassembly in the cover bore with the sealing face up, and cover the seal face with a clean, lint-free cloth. Use your thumbs to press the assembly into the bore. Apply a drop of oil to the lower seal stationary face. Install the oil chamber cover gasket. Carefully position the oil chamber cover over the shaft so the lower seal faces contact. Install the machine screws and tighten them in an alternating pattern until the seal springs are compressed and the cover seats tightly against the gasket. Fill the seal chamber with oil to cover the seals, but **do not** completely fill the chamber. There must be enough air in the chamber to allow for expansion as the oil heats. Refer to the **Lubrication Specifications** at the end of this section for the correct lubricant. Reinstall the oil cavity drain screw and o-ring. Lubricate the lip of the oil seal and place the seal in the oil chamber cover with the lip positioned as shown in the seal detail, Figure 1. Press the seal into the oil chamber cover until fully seated.

7. IMPELLER INSTALLATION. Lubricate the O.D. of the shaft sleeve. Slide the sleeve over the shaft and through the lip seal until fully seated against the shaft shoulder. Be careful not to damage the lip seal. Screw the impeller onto the shaft until it is fully seated. Insert a large flat-blade screwdriver into the slot in the end of the shaft. Tighten the impeller on the shaft by tapping it with a hammer and wood block or a soft-faced mallet. Install the suction cover o-ring and impeller housing/suction cover and position the strainer screen against the impeller housing/suction cover, and secure.

8. LUBRICATION SPECIFICATIONS. When shipped from the factory, the pump seal cavity was fully lubricated with **Shell Turbo-T68** oil. Use only Shell Turbo-T68 or **Gulf Harmony HVI AW 26** oil for repair. Quantities for each pump are as follows:

Seal Cavity: Cover seal but do not completely fill chamber.

Motor: Does not require lubrication.

COMPACT BALL VALVES

Sample Engineering Specification

All thermoplastic ball valves shall be Compact sealed unit type constructed from PVC Type I, ASTM D 1784 Cell Classification 12454 or CPVC Type IV, Cell Classification 23447. All O-rings shall be EPDM or Viton®. All valves shall have Safe-T-Shear® stem and Polypropylene handle. All valves shall be certified by NSF International for use in potable water service. All 1/2" - 2" valves shall be pressure rated at 235 psi, all 3" - 6" and all flanged valves shall be pressure rated at 150 psi for water at 73°F, as manufactured by Spears® Manufacturing Company.

Features – PVC, CPVC

This industrial grade, quarter turn shutoff valve is popular where maintenance-free installations are desired for a variety of chemical processing, industrial and OEM applications. IPS Sizes 1/2" - 4" available with socket, threaded or flanged end connectors. 6" size available with socket or flanged end connectors. 6" valve uses high-efficiency lever style handle for easier operation.

- Chemical & Corrosion Resistant PVC or CPVC Construction
- Maintenance-Free Sealed Unit
- Schedule 80 Full-Bore Design
- High Impact Polypropylene Handle
- Spears® Single O-ring Safe-T-Shear® Stem Design
- EPDM or Viton® O-rings
- Self Adjusting PTFE Floating Seat Design
- Sizes 1/2" - 2" Pressure Rated to 235 psi @ 73°F, Sizes 3" - 6" and all Flanged Pressure Rated to 150 psi @ 73°F
- NSF Certified for Potable Water use
- Suitable for Vacuum Service
- Assembled with Silicone-Free, Water Soluble Lubricant
- Manufactured to ASTM F 1970

Note: Valve size 6" uses Lever Handle (not shown)

Quick-View Valve Selection Chart

Valve Size	O-ring Material	PVC Part Numbers[1]			Pressure Rating
		Socket	Threaded	Flanged	
1/2	EPDM	2122-005	2121-005	2123-005	235 psi Non-Shock Water @ 73°F (Flanged 150 psi Non-Shock) Water @ 73 F
	Viton®	2132-005	2131-005	2133-005	
3/4	EPDM	2122-007	2121-007	2123-007	
	Viton®	2132-007	2131-007	2133-007	
1	EPDM	2122-010	2121-010	2123-010	
	Viton®	2132-010	2131-010	2133-010	
1-1/4	EPDM	2122-012	2121-012	2123-012	
	Viton®	2132-012	2131-012	2133-012	
1-1/2	EPDM	2122-015	2121-015	2123-015	
	Viton®	2132-015	2131-015	2133-015	
2	EPDM	2122-020	2121-020	2123-020	
	Viton®	2132-020	2131-020	2133-020	
3	EPDM	2122-030	2121-030	2123-030	150 psi Non-Shock Water @ 73°F
	Viton®	2132-030	2131-030	2133-030	
4	EPDM	2122-040	2121-040	2123-040	
	Viton®	2132-040	2131-040	2133-040	
6	EPDM	2122-060	—	2123-060	
	Viton®	2132-060	—	2133-060	

[1] For CPVC valves, add the letter "C" to the part numbers listed (e.g., 2134-005C)

Optional Accessories*

- Round Safety Handle
- Stem Extension Kit
- Mini-Mount Actuation Mounting Kit
- 2" Square/T-Style Operator Nut

*See "**BALL VALVE ACCESSORIES**" section for details of additional products

COMPACT BALL VALVES

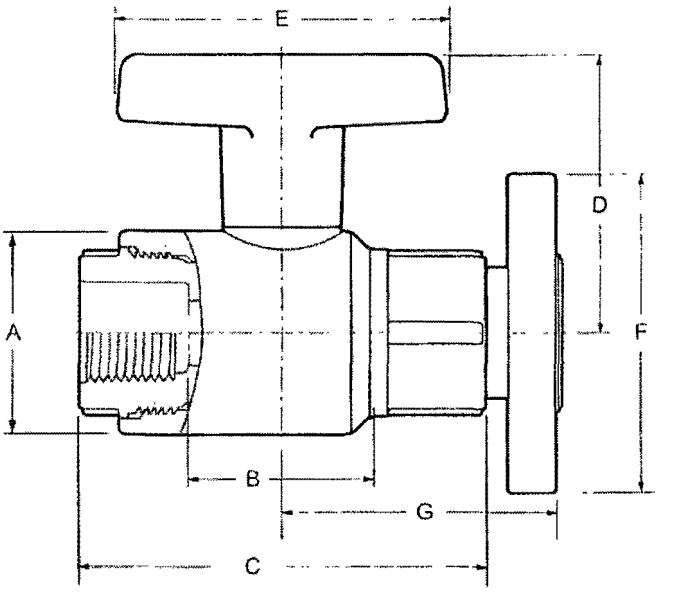

Dimensions, Weights, Operating Torque & C_V Values

Nominal Size	Dimension Reference (inches, ± 1/16)								Approx. Wt. (Lbs.)		Oper.[2] Torque (in.-lb.)	Cv^3 Values	
	A	B[1]		C	D	E[4]	F	G	PVC	CPVC		Soc/Thd	Flanged
		Socket	Threaded										
1/2	1-11/16	1-5/8	1-7/8	3-3/8	2-5/16	2-3/4	3-1/2	2-17/32	.31	.32	20	36	20
3/4	2-1/8	1-15/16	2-7/16	4-1/16	2-11/16	3-1/4	3-7/8	2-27/32	.49	52	30	74	42
1	2-7/16	2-1/16	2-3/8	4-7/16	2-7/8	3-3/4	4-1/4	3-1/16	64	69	40	141	80
1-1/4	2-13/16	2-3/8	3	4-15/16	3-5/16	4-1/8	4-5/8	3-13/32	.93	.98	60	284	163
1-1/2	3-1/4	2-13/16	3-1/2	5-5/8	3-11/16	4-1/2	5	4	1.39	1.45	80	402	229
2	4-1/16	3-3/8	4-7/16	6-1/2	4-3/8	5-1/4	5-7/8	4-13/32	2.33	2.45	90	706	429
3	5-5/16	4-9/16	5-1/2	8-5/16	5-1/2	7-21/32	7-1/2	5-7/16	4.49	5.02	300	1660	1079
4	7-3/8	6-3/16	7-3/16	10-5/32	6-5/8	10-27/32	9-1/16	6-7/8	9.50	10.24	400	3104	2028
6[4]	10-3/16	8	10-3/4	14-1/8	8-1/16	14-5/16	11-1/4	8-21/32	21.48	23.41	900	7942	5268

1: Valve Lay Length
2: Torque required at valve maximum internal pressure rating, 5 ft./sec. flow velocity
3: Gallons per minutes at 1 psi pressure loss. Values calculated from valve laying length based on derivative of Hazen-Williams equation with surface roughness factor of C = 150.
4: 8" valve has lever handle, dimension is from valve centerline (not illustrated)

Temperature Pressure Rating

System Operating Temperature °F (°C)			100 (38)	110 (43)	120 (49)	130 (54)	140 (60)	150 (66)	160 (71)	170 (77)	180 (82)	190 (88)	200 (93)	210 (99)
Valve Pressure Rating psi (MPa)	1/2" - 2"	PVC	235 (1.62)	211 (1.45)	150 (1.03)	75 (.52)	50 (.34)	-0- (-0-)	-0- (-0-)	-0- (-0-)	-0- (-0-)	-0- (-0-)	-0- (-0-)	-0- (-0-)
		CPVC	235 (1.62)	219 (1.51)	170 (1.17)	145 (1.00)	130 (.90)	110 (.76)	90 (.62)	80 (.55)	70 (.48)	60 (.41)	50 (.34)	-0- (-0-)
	3" - 6"	PVC	150 (1.03)	135 (.93)	110 (.76)	75 (.52)	50 (.34)	-0- (-0-)	-0- (-0-)	-0- (-0-)	-0- (-0-)	-0- (-0-)	-0- (-0-)	-0- (-0-)
		CPVC	150 (1.03)	140 (.97)	130 (.90)	120 (.83)	110 (.76)	100 (.70)	90 (.62)	80 (.55)	70 (.48)	60 (.41)	50 (.34)	-0- (-0-)

NOT FOR USE WITH COMPRESSED AIR OR GASES

Butterfly Valves

1-1/2″ to 12″ • Bodies - PVC, Corzan® CPVC, PPL Disks - PVC, Corzan® CPVC, PPL, PVDF

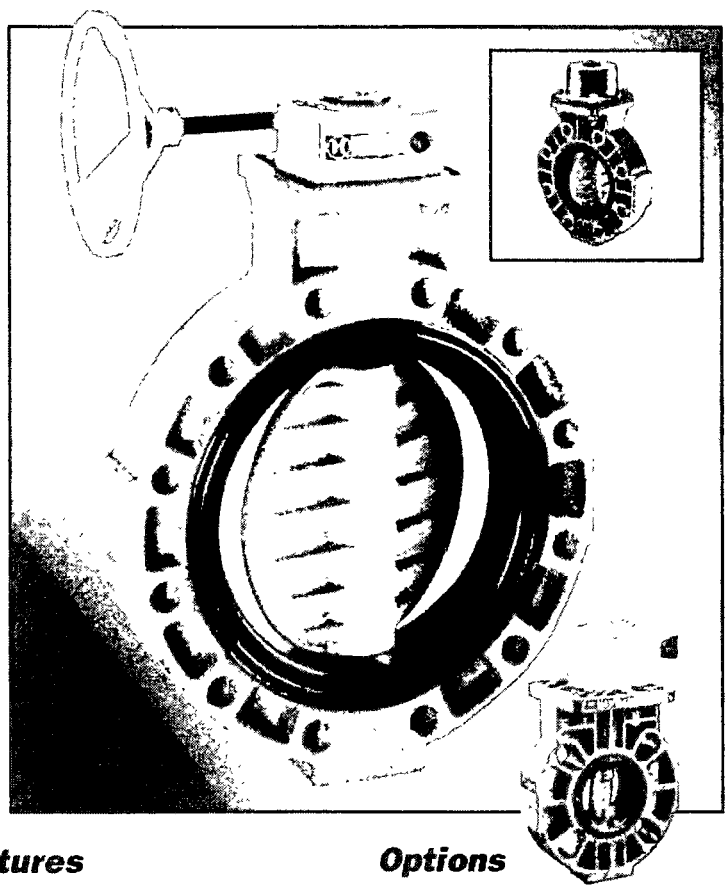

Features

- Rated at 150 PSI
- Stainless Steel Shaft
- Fully Supported Flange Bolt Holes
- Full Body, V-Notch Liner
- Blowout-Proof Shaft
- Viton®, EPDM or Nitrile Liners
- Wafer Body Design
- Conforms to ANSI B16.10 Face-to-Face Dimensions

Options

- Stem Extensions
- Lug Body Design
- Gear Operators
- Electric Actuators
- Pneumatic Actuators
- Titanium Shaft
- 2″ Square Operating Nut
- PVDF Discs
- Actuator Mounts

Corzan® is a registered trademark of Noveon, Inc.
Viton® is a registered trademark of DuPont

A Better Butterfly Valve

Hayward 1-1/2″ through 12″ all-Plastic Butterfly Valves are rated at a full 150 PSI. Unlike other plastic butterfly valves, Hayward valves are constructed from a one piece body that incorporates fully supported flanged bolt holes to prevent stressing of the mating pipe flanges. Their heavy duty construction stands up to the most demanding applications. The rock solid integral mounting pad ensures that the valve operator will function reliably – whichever operator is used, lever handle, gear box or actuator.

Extra Features, No Extra Cost

Hayward Butterfly Valves feature a blowout-proof stainless steel stem and a unique, full body liner that has a V-notch retention design. This assures positive sealing of the liner to the valve body. An integrally molded face seal provides positive sealing against the mating flange without the need for additional gaskets. The lever handle has a built in lockout feature and every Hayward valve is ready for actuation.

Better Sealing

Other plastic butterfly valves have only a thin o-ring on the disk to seal the valve, but Hayward valves feature a full body liner seal. This means that the process media never contacts the valve body. And you can count on the full liner seal to perform reliably, year after year.

Easy Retrofit

Hayward Butterfly Valves can be easily fitted into a metal piping system. All valve sizes meet industry face-to-face standards – allowing simple retrofit.

No Metal, No Corrosion

These valves have no metal in contact with the process media. They cannot corrode or rust – nor will they contaminate sensitive fluids flowing through them.

Technical Information

Lever Handle Operator

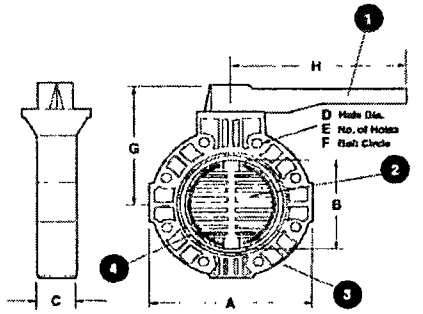

Gear Box Operator

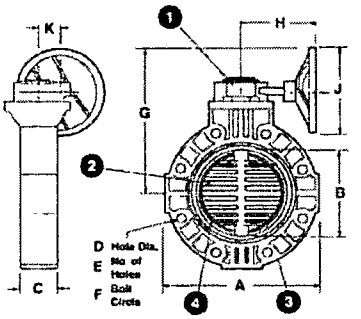

Parts List Butterfly Valves

1. Operator (Lever or Gear Box)
2. Disc
3. Body
4. Liner

Dimensions - Inches / Millimeters

Size	A	B	C	D	E	F	G		H		J	K	Wt. Lb / Kg
							Gear Box	Lever	Gear Box	Lever			
1 1/2 / 50	6.00 / 152	1.75 / 44	1.50 / 38	.63 / 16	4	3.88 / 99	9.31 / 236	6.25 / 159	7.13 / 181	10.50 / 267	8.00 / 203	1.88 / 48	10.5 / 4.8
2 / 63	6.00 / 152	1.75 / 44	1.50 / 38	.75 / 19	4	4.75 / 121	9.31 / 236	6.25 / 159	7.13 / 181	10.50 / 267	8.00 / 203	1.88 / 48	10.5 / 4.8
3 / 90	7.75 / 197	3.13 / 80	2.00 / 51	.75 / 19	4	6.00 / 152	9.75 / 248	6.69 / 170	7.13 / 181	10.50 / 267	8.00 / 203	1.88 / 48	11.6 / 5.3
4 / 110	9.25 / 235	3.94 / 100	2.19 / 56	.75 / 19	8	7.50 / 191	10.19 / 259	7.94 / 202	7.13 / 181	12.00 / 305	8.00 / 203	1.88 / 48	14.3 / 6.5
6 / 160	11.25 / 286	5.81 / 148	2.31 / 59	.88 / 22	8	9.50 / 241	12.38 / 314	9.50 / 241	7.13 / 181	14.00 / 356	8.00 / 203	1.88 / 48	15.4 / 7.0
8 / 225	13.75 / 349	7.75 / 197	2.50 / 64	.88 / 22	8	11.75 / 298	13.50 / 343	10.63 / 270	7.13 / 181	16.00 / 406	8.00 / 203	1.88 / 48	23.5 / 10.7
10 / 280	16.00 / 406	9.76 / 248	3.00 / 76	1.00 / 25	12	14.25 / 362	16.00 / 406	N/A	8.09 / 205	N/A	8.00 / 203	2.36 / 59	39.0 / 17.7
12 / 315	19.00 / 483	11.50 / 292	3.18 / 81	1.00 / 25	12	17.00 / 432	17.50 / 445	N/A	8.09 / 205	N/A	8.00 / 203	2.36 / 59	51.0 / 23.1

DIN metric flanges available

Cv Factors

Size	Factor	Size	Factor
1-1/2"	90	6"	1100
2"	125	8"	2500
3"	280	10"	4700
4"	675	12"	7100

Pressure Loss Calculation Formula

$$\Delta P = \left[\frac{Q}{Cv}\right]^2$$

ΔP = Pressure Drop
Q = Flow in GPM
Cv = Flow Coefficient

Operating Temperature/Pressure

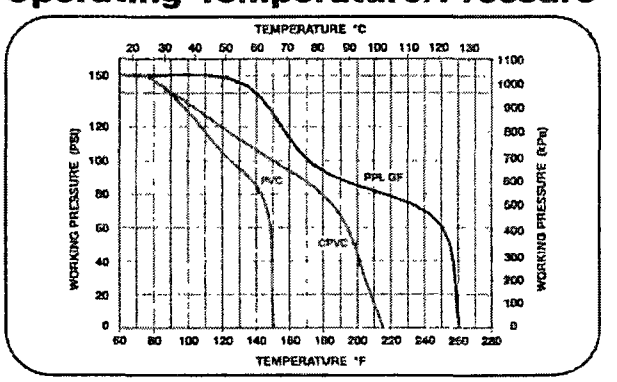

Selection Chart

Size	Body Material	Disc Material	Shaft Material	Liner	Operator	Pressure Rating
1-1/2" to 8"	CPVC	CPVC	316 SSTL	FPM, EPDM or Nitrile	Lever or Gear Box	150 PSI @70°F Non-Shock
1-1/2" to 8"	PVC	PVC, PPL, or PVDF				
1-1/2" to 12"	PPL	PPL				

* CPVC/CPVC 8" gear operated only

True Union Ball Check Valves

1/4″ to 6″ PVC, Corzan® CPVC, PPL

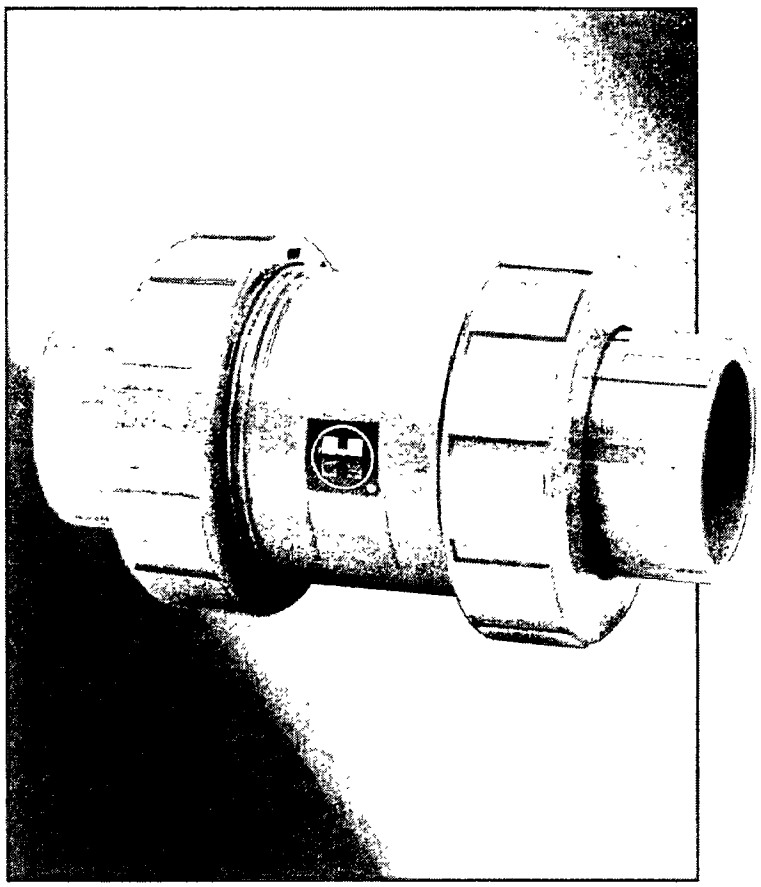

Backflow Prevention

Hayward True Union Ball Check Valves prevent reversal of flow in piping systems. They are ideal where backflow could potentially cause damage to pumps, filters, or process equipment.

Automatic Operation

Hayward True Union Ball Check Valves operate without the need for any adjustments or settings. Line pressure moves the solid plastic ball off the elastomer seat, opening the valve. When the inlet flow stops, back pressure moves the ball back onto the seat – stopping the flow. Additionally, this valve features a unique square-cut elastomer seat to seal at low back pressures.

True Union Design

Sizes 1/2″ to 6″ feature a true union design. This allows for easy removal from a piping system without breaking down piping connections. Just unscrew the two assembly nuts and lift the valve body out of the line. A Trim Check design is used for the 1/4″ and 3/8″ sizes. While not true union, the valves are fully repairable, unlike some other smaller check valves.

No Corrosion Failures

Because of their all-plastic construction, these valves will never jam or stick as a result of rust or corrosion. Also they will not contaminate sensitive fluids that come into contact with them.

Features

- Full Port Design to 4″
- True Union Design
- Easy Maintenance
- FPM or EPDM Seals
- Unique Square Cut Seat
- Works in Any Position Except Downflow

Options

- Foot Valve Screens

Corzan® is a registered trademark of Noveon, Inc.

Technical Information

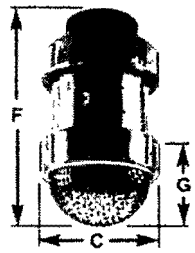

True Check with foot valve screen installed

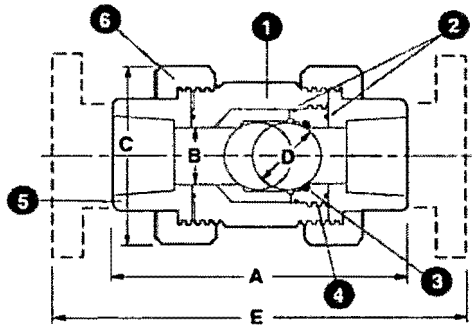

Parts List
True Union Ball Check Valves

1. Body
2. O-Ring Seals
3. Square Cut O-Ring Seat
4. Seal Retainer
5. End Connector
6. Union Nut

Dimensions - Inches / Millimeters

Size	A	B	C	D	E	F	G	Weight - (lb / kg) Socket/ Threaded	Weight - (lb / kg) Flanged
1/4"	3.06 / 78	0.31 / 8	1.38 / 35	0.50 / 13	N/A	N/A	N/A	0.13 / .06	N/A
3/8"	3.06 / 78	0.31 / 8	1.38 / 35	0.50 / 13	N/A	N/A	N/A	0.13 / .06	N/A
1/2" / 20*	4.63 / 118	0 50 / 13	2.25 / 57	0.75 / 19	6.75 / 171	4.88 / 124	2.32 / 59	0.75 / .34	1.00 / .45
3/4" / 25*	4.75 / 121	0.75 / 19	2.63 / 67	1.0 / 25	7.13 / 181	5.00 / 127	2.60 / 66	0.75 / .34	1.38 / .63
1" / 32*	5.25 / 133	1.00 / 25	3.00 / 76	1 25 / 32	7.75 / 197	5.88 / 14	2.88 / 73	1.25 / .57	2.13 / .97
1-1/4" / 40*	6.30 / 160	1.25 / 32	4.00 / 102	1.75 / 44	9.19 / 233	6 94 / 17	3 75 / 95	2.00 / .90	3.75 / 1.70
1-1/2" / 50*	6.75 / 171	1.50 / 38	4.00 / 102	1.75 / 44	9.75 / 248	7.06 / 17	3.75 / 95	2.00 / .90	3.75 / 1 70
2" / 63*	8.00 / 203	1.94 / 49	4.75 / 121	2 25 / 57	11.25 / 286	8.56 / 217	4.50 / 114	3.75 / 1.70	5.75 / 2.60
2-1/2"	10.68 / 271	2.88 / 73	6.56 / 167	3.25 / 83	14.38 / 365	11.25 / 286	2.50 / 64	10.00 / 4.54	14.00 / 6 36
3" / 90*	10.56 / 268	2.88 / 73	6.56 / 167	3.25 / 83	14.38 / 365	11.25 / 286	2.50 / 64	10.00 / 4.54	14.00 / 6.36
4" / 110*	12.94 / 329	4.00 / 102	8.56 / 217	4.25 / 108	17.00 / 432	14.63 / 372	4.25 / 108	17.00 / 7.72	25.00 / 11.36
6"	N/A	4.00 / 102	N/A	4.25 / 108	19.19 / 487	N/A	N/A	N/A	30.20 / 13.73

* **Metric End Connections Available in:** BSP - Straight Thread, BSP TR – Tapered Thread and Metric Socket

Selection Chart

Size	Material	End. Conn.	Seals	Pressure Rating
1/4" - 3/8"**	PVC	Socket or Threaded	FPM	150 PSI @70°F Non-Shock
1/2" - 4"	PVC or CPVC	Socket, Threaded, or Flanged	FPM or EPDM	
1/2" - 2"	NAT. PPL***	Threaded	FPM	
6"**	PVC or CPVC	Flanged		

* Trim Check Design
** 4" Valve Venturied to 6"
*** 2" Rated at 100 PSI

Operating Temperature/Pressure

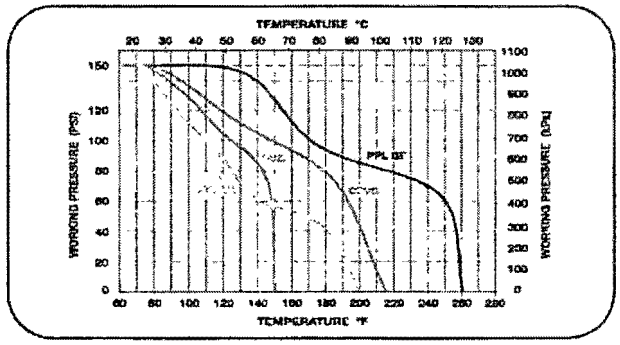

Cv Factors

Size	Factor	Size	Factor
1/4"	1.0	1-1/2"	45
3/8"	3.0	2"	130
1/2"	4.8	2-1/2"	170
3/4"	7.7	3"	250
1"	11	4"	400
1-1/4"	25	6"	340

Pressure Loss Calculation Formula

$$\Delta P = \left[\frac{Q}{Cv}\right]^2$$

ΔP = Pressure Drop
Q = Flow in GPM
Cv = Flow Coefficient

TRUE UNION 2000 INDUSTRIAL BALL VALVES

Features – PVC, CPVC

This multi-featured, space saving quarter-turn shutoff valve is designed to meet the demands of today's industrial and chemical processing applications. PVC and CPVC valves are available in IPS sizes 1/2" through 6" with socket regular thread, SR (Special Reinforced) thread, flanged or spigot end connectors and 8" Venturied valve with socket or flanged ends. Also available in metric socket and BSP thread sizes 1/2" through 2".

- Chemical & Corrosion Resistant PVC or CPVC Construction
- Also Available in Spears® LXT™ High Purity, Low Extractable PVC Material
- Interchangeable with all True Union 2000 Valves Mates with Union 2000 Pipe Unions
- High Impact Polypropylene Handle
- Built-in Handle Lockout
- Schedule 80 Full-Bore Design
- Strong, Buttress Thread Union Nuts
- Spears® Double O-ring Safe-T-Shear® Stem Design
- EPDM or Viton® O-rings
- Spears® Safe-T-Blocked® Seal Carrier
- Self Adjusting PTFE Floating Seat Design
- Fully Serviceable, Replaceable Components
- Sizes 1/2" - 4" pressure rated to 235 psi @ 73°F. Sizes 6" and 8" Venturied and all Flanged to 150 psi @ 73°F
- NSF Certified for Potable Water use
- Suitable for Vacuum Service
- Assembled with Silicone-Free, Water Soluble Lubricants
- Manufactured to ASTM F 1970

Sample Engineering Specification

All thermoplastic ball valves shall be True Union 2000 Industrial type manufactured to ASTM F 1970 and constructed from PVC Type I, ASTM D 1784 Cell Classification 12454 or CPVC Type IV, ASTM D1784 Cell Classification 23447. All O-rings shall be EPDM or Viton®. All valves shall have Safe-T-Shear® stem with double O-ring stem seals. All valve handles shall be polypropylene with built-in lockout mechanism. All valve union nuts shall have Buttress threads. All seal carriers shall be Safe-T-Blocked®. All valve components shall be replaceable. All valves shall be certified by NSF International for use in potable water service. All 1/2" through 4" valves shall be pressure rated to 235 psi, all 6" and 8" Venturied and all flanged valves shall be pressure rated to 150 psi for water at 73°F.

Quick-View Valve Selection Chart

Valve Size	O-ring Material	PVC Part Number [1]					Pressure Rating
		Socket	Threaded	SR Threaded	Flanged	Spigot	
1/2	EPDM	1829-005	included	1821-005SR	1823-005	1827-005	235 psi Non-Shock Water @ 73°F (Flanged 150 psi Non-Shock) Water @ 73°F
	Viton®	1839-005	included	1831-005SR	1833-005	1837-005	
3/4	EPDM	1829-007	included	1821-007SR	1823-007	1827-007	
	Viton®	1839-007	included	1831-007SR	1833-007	1837-007	
1	EPDM	1829-010	included	1821-010SR	1823-010	1827-010	
	Viton®	1839-010	included	1831-010SR	1833-010	1837-010	
1-1/4	EPDM	1829-012	included	1821-012SR	1823-012	1827-012	
	Viton®	1839-012	included	1831-012SR	1833-012	1837-012	
1-1/2	EPDM	1829-015	included	1821-015SR	1823-015	1827-015	
	Viton®	1839-015	included	1831-015SR	1833-015	1837-015	
2	EPDM	1829-020	included	1821-020SR	1823-020	1827-020	
	Viton®	1839-020	included	1831-020SR	1833-020	1837-020	
2 1/2	EPDM	1822-025	1821-025	1821-025SR	1823-025	1827-025	
	Viton®	1832-025	1831-025	1831-025SR	1833-025	1837-025	
3	EPDM	1822-030	1821-030	1821-030SR	1823-030	1827-030	
	Viton®	1832-030	1831-030	1831-030SR	1833-030	1837-030	
4	EPDM	1822-040	1821-040	1821-040SR	1823-040	1827-040	
	Viton	1832-040	1831-040	1831-040SR	1833-040	1837-040	
6	EPDM	1822-060	1821-060	1821-060SR	1823-060	1827-060	150 psi Non-Shock Water @ 73°F
	Viton®	1832-060	1831-060	1831-060SR	1833-060	1837-060	
8[3]	EPDM	1822-080	—	—	1823-080	—	
	Viton®	1832-080	—	—	1833-080	—	

1: For CPVC, add the letter "C" between the first digit and the size code of part number (Listed (e.g. 1829-005C, 1821-005CSR)
2: For Special Ball Vent Design, add the letter "V" before the dash separator (e.g. 1829V-005, 1821V-005CSR)
3: 8" Venturied Valves are 6" ball valves fitted with 6x8 end connector adapters

Optional Vented Ball Valves

Same valve with special ball vent design for sodium hypochlorite (bleach) and other chemical applications where entrapped fluids may form caustic crystalline residues and pressure build up from gases developed. Valve has a 1/8" vent hole in ball to equalize internal fluid pressures. Install valve with ball vent on the pressure (upstream) side when in closed position.

Optional Accessories*

- Retro-Fit End Connector Sets for Valve Replacement
- Split-Nut Repair Kits for Union Nut Replacement
- Supplemental End Connectors
- Round Safety Handles
- Handle Lockout Ring
- Stem Extension Kits
- Square Operator Nuts
- Multi Mount Valve/Actuation Mounting Kits
- Mini-Mount Actuation Mounting Kits

* See **"BALL VALVE ACCESSORIES"** section for details of individual products.

TRUE UNION 2000 INDUSTRIAL BALL VALVES

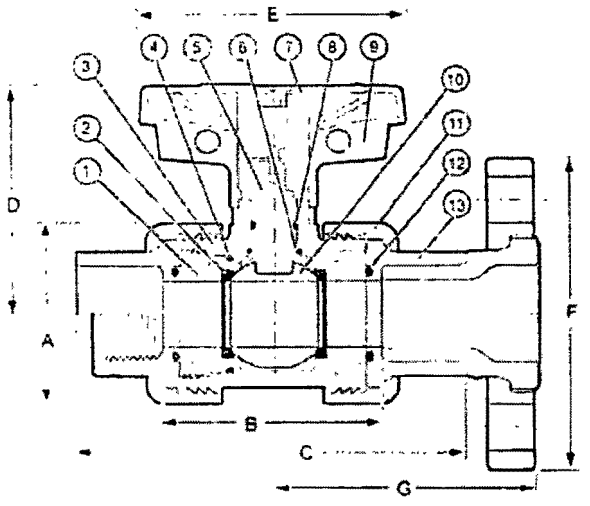

Replacement Parts

No.	Component	Qty.	Material
1	Seal Carrier	1	PVC/CPVC
2	Seat	2	PTFE
3	Body	1	PVC/CPVC
4	Carrier O-ring	1	EPDM/Viton®
5	Stem	1	PVC/CPVC
6	Stem Bearing	1	PP
7	Handle	1	PP
8	Stem O-ring	2	EPDM/Viton®
9	Handle Lock	1	PP
10	Ball	1	PVC/CPVC
11	Union Nut	2	PVC/CPVC
12	End Connector O-ring	2	EPDM/Viton®
13	End Connector	2	PVC/CPVC

Dimensions, Weights, Operating Torque & C_V Values

Nominal Size	Dimensions Reference (Inches, ± 1/16)										Approx. Wt. (Lbs.)		Oper.[2] Torque (In. lbs.)	Cv^3 Values		
	A	B[1]		C			D	E	F	G	PVC	CPVC		Soc/Thd	Flanged	Spigot
		Soc/Thd	Spigot	Socket	Thread	Spigot										
1/2	4-7/8	2-3/8	2-7/8	4-3/16	3-3/16	4-5/8	2-9/16	2-13/16	3-1/2	2-31/32	.36	.38	16	29	18	27
3/4	5-1/4	2-3/4	3-1/4	4-3/4	4-1/4	5-1/4	2-7/8	3-3/8	3-7/8	3-5/16	.50	.58	17	63	39	57
1	5-1/2	2-7/8	3-1/2	5-1/8	4-11/16	5-3/4	3-1/8	3-7/16	4-1/2	3-5/8	.74	.77	22	120	73	108
1-1/4	6-1/16	3-1/4	3-13/16	5-3/4	5-3/16	6-5/16	3-5/8	3-7/8	4-5/8	3-31/32	1.13	1.19	26	243	151	223
1-1/2	6-1/2	3-1/2	4	6-1/4	5-7/16	6-3/4	4	4-3/16	5	4-3/8	1.54	1.60	61	357	223	333
2	7-1/4	4-3/4	5-3/16	7-3/4	6-3/4	8-1/4	4-1/2	5-1/8	6	5-1/4	2.72	2.86	77	599	395	571
2-1/2	8-3/8	6-7/8	7-13/16	10-7/16	9-11/16	11-3/8	5-1/8	6-1/4	7-1/2	6	7.42	7.70	137	856	579	734
3	9-3/16	7	7-13/16	10-11/16	9-7/8	11-8/16	5-7/8	7-5/8	7-1/2	6-13/16	7.46	7.81	132	1416	974	1372
4	12-5/8	7-5/16	8-1/4	11-7/8	10-1/4	12-3/4	6-3/4	9-3/16	9	7-1/2	12.35	12.48	396	2885	1952	2677
6	15-5/8	11-1/16	13	17-1/16	15-3/4	18-1/2	8-1/8	14-5/16	11-1/4	10-3/16	37.53	40.55	732	6830	4824	6149
8[4]	19-5/8	23-3/16	—	31-7/8	—	—	8-1/8	14-5/16	13-1/2	17-13/16	50.84	55.82	732	N/A	N/A	N/A

1 Valve Lay Length

2 Torque required at valve maximum internal pressure rating 5ft/sec Flow velocity, due to adjustment differences during installation actual valves may vary

3 Gallons per minute at 1 psi pressure drop Valves calculated from laying length, based on derivative of Hazen-Williams equation with surface roughness factor of C=150

4 8" Venturied Valves are 6" ball valves fitted with 6x8 end connector adaptors.

Temperature Pressure Rating

System Operating Temperature °F (°C)			100 (38)	110 (43)	120 (49)	130 (54)	140 (60)	150 (66)	160 (71)	170 (77)	180 (82)	190 (88)	200 (93)	210 (99)
Valve Pressure Rating psi (MPa)	1/2" - 4"	PVC	235 (1.62)	211 (1.45)	150 (1.03)	75 (.52)	50 (.34)	-0- (-0-)	-0- (-0-)	-0- (-0-)	-0- (-0-)	-0- (-0-)	-0 (-0-)	-0 (-0-)
		CPVC	235 (1.62)	219 (1.51)	170 (1.17)	145 (1.00)	130 (.90)	110 (.76)	90 (.62)	80 (.55)	70 (.48)	60 (.41)	50 (.34)	-0- (-0-)
	6" and 8"	PVC	150 (1.03)	135 (.93)	110 (.76)	75 (.52)	50 (.34)	-0- (-0-)	-0- (-0-)	-0- (-0-)	-0- (-0-)	-0- (-0-)	-0- (-0-)	-0- (-0-)
		CPVC	150 (1.03)	140 (.97)	130 (.90)	120 (.83)	110 (.76)	100 (.70)	90 (.62)	80 (.55)	70 (.48)	60 (.41)	50 (.34)	-0- (-0-)

NOTE Flanged Valves have a lower pressure rating of 150 psi

NOT FOR USE WITH COMPRESSED AIR OR GASES

UTILITY SWING & SPRING CHECK VALVES

Sample Engineering Specification

All thermoplastic check valves Shall be Utility Swing Check or Utility Spring Check type constructed form PVC Type I, ASTM D 1784 Cell Classification 12454. All valves shall be maintenance free seal unit construction with EPDM seat and weighted disc. All Spring Check Valves shall have stainless steel spring assisted operation. All valves shall have external flow arrow direction designation. All valves shall be certified by NSF International for use in potable water service. All valves shall be pressure rated to 150 psi for water @ 73°F in full flow (open) position and to 75 psi @ 73°F back pressure (closed), as manufactured by Spears® Manufacturing Company.

Features - PVC White & PVC Clear

Spears® Utility Swing Check and spring assisted Utility Spring Check Valves offer a compact, high performance check valve for Landscape & Irrigation, Pool & Spa, Aquaculture, OEM and many general purpose applications. These maintenance free sealed units feature long-life EPDM elastomer seats with weighted disc for full-flow with minimal restriction and positive shutoff. Spring assisted "Spring Check" model incorporates a positive-pressure spring to assist in valve closing without slamming. Produced from PVC White or PVC Clear material with Socket, Threaded or SR Threaded end connectors. Available in IPS Sizes 1/2" through 8" for Swing Check Valves and 1/2" through 4" for Spring Check Valves.

- Chemical & Corrosion Resistant PVC White or High Visibility PVC Clear Construction
- No Metal Parts on Swing Check - Stainless Steel Spring on Spring Check
- Maintenance Free Sealed Unit in a Compact Space Saving Design
- Engineered for Maximum Flow, Quick Response & Positive Shutoff
- Long-Life, High Grade EPDM Seat with Weighted Disc
- Spring Assisted Spring Check Model Option for Positive Closing
- Sizes 1/2" – 8" Pressure Rated to 150 psi @ 73°F Full-Flow (open) and 75 psi @ 73°F Back Pressure (closed)
- Suitable for either Horizontal or Vertical Up-flow Installations and Vacuum Service
- NSF Certified for Potable Water Use
- Silicone-Free Assembly

Quick-View Utility Swing Check Valve Selection Chart

Valve Size	Seat Material	PVC Material[1]			Pressure Rating
		Socket	Threaded	SR Threaded	
1/2	EPDM	S1520-05	S1520-05F	S1520-05FSR	150 psi @ 73°F Full Flow (Open) 75 psi Back Pressure (Closed)
3/4	EPDM	S1520 07	S1520-07F	S1520-07FSR	
1	EPDM	S1520-10	S1520-10F	S1520-10FSR	
1-1/4	EPDM	S1520-12	S1520-12F	S1520-12FSR	
1-1/2	EPDM	S1520-15	S1520-15F	S1520-15FSR	
2	EPDM	S1520-20	S1520-20F	S1520-20FSR	
2-1/2	EPDM	S1520-25	S1520-25F	S1520-25FSR	
3	EPDM	S1520-30	S1520-30F	S1520-30FSR	
4	EPDM	S1520-40	S1520-40F	S1520-40FSR	
6	EPDM	S1520-60	S1520-60F	S1520-60FSR	
8	EPDM	S1520-80	N/A	N/A	

1 For PVC Clear Swing Check replace dash (-) separator with the letter C in the part number (e.g. S1520C05, (e.g. S1520C05F) or (e.g. S1520C05FSR)

Quick-View Utility Spring Check Valve Selection Chart

Valve Size	Seat Material	PVC Material[1]			Pressure Rating
		Socket	Threaded	SR Threaded	
1/2	EPDM	S1580-05	S1580-05F	S1580-05FSR	150 psi @ 73 F Full Flow (Open) 75 psi Back Pressure (Closed)
3/4	EPDM	S1580-07	S1580-07F	S1580-07FSR	
1	EPDM	S1580-10	S1580-10F	S1580-10FSR	
1-1/4	EPDM	S1580-12	S1580-12F	S1580-12FSR	
1-1/2	EPDM	S1580-15	S1580-15F	S1580-15FSR	
2	EPDM	S1580-20	S1580-20F	S1580-20FSR	
2-1/2	EPDM	S1580-25	S1580-25F	S1580-25FSR	
3	EPDM	S1580-30	S1580-30F	S1580-30FSR	
4	EPDM	S1580-40	S1580-40F	S1580-40FSR	

1 For PVC Clear Spring Check replace dash (-) separator with the letter C in the part number (e.g. S1580C05) (e.g. S1580C05F) or (e.g. S1580C05FSR)

UTILITY SWING & SPRING CHECK VALVES

Utility Swing Check Valve

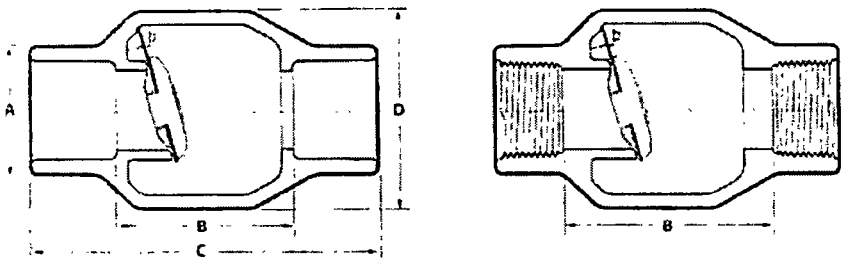

Utility Spring Check Valve

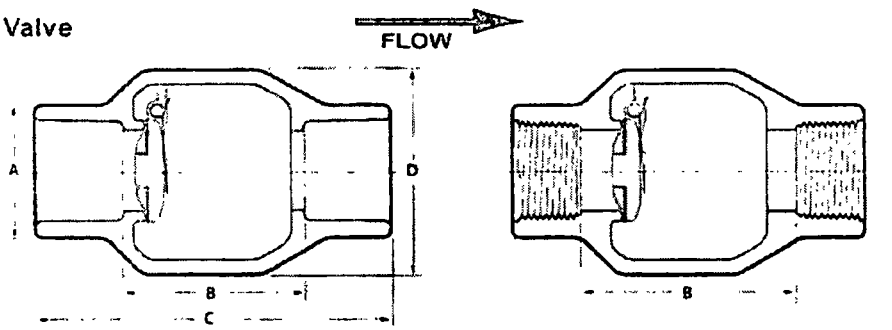

Dimensions

Nominal Size	Dimension Reference (inches, ± 1/16)					
	A	B		C	D	
		Socket	Threaded/SR Threaded		Swing	Spring
1/2	1-3/8	2-19/32	2-5/8	4-3/32	2-1/8	2-5/8
3/4	1-3/8	2-5/32	2-1/16	4-1/16	2-1/8	2-5/8
1	1-11/16	2-5/16	2-15/16	4-9/16	2-5/8	2-5/8
1-1/4	2-1/16	2-15/16	3-5/8	5-1/2	3-3/8	3-3/8
1-1/2	2-7/16	3	3-11/16	5-5/8	3-3/8	3-3/8
2	3	3-5/8	4-3/8	6-3/8	4-1/4	4-1/4
2-1/2	3-9/16	4-3/8	5-1/4	7-7/8	5-1/8	5-1/8
3	4-5/16	4-11/16	5-5/8	8-7/16	5-3/4	5-3/4
4	5-1/4	6	7-1/16	10-1/16	6-3/8	6-3/8
6	7-11/16	8-1/2	11-5/16	14-9/16	9-1/4	N/A
8	9-7/16	11-3/16	N/A	19-1/4	11-15/16	N/A

General Installation Information: Utility Swing check valves are designed for horizontal installations, but may be installed in up-flow only vertical position. Check valves **MUST** be installed with the valves FLOW arrow pointing in the direction of the flow. Do not install valve upside down. Flow velocity should not exceed 5ft./sec. Minimum opening pressure less than 0.5 psi.

Temperature Pressure Rating

System Operating Temperature °F (°C)			100 (38)	110 (43)	120 (49)	130 (54)	140 (60)	150 (66)	160 (71)	170 (77)	180 (82)	190 (88)	200 (93)	210 (99)
Valve Pressure Rating psi (MPa)	1/2" - 8"	PVC	150 (1.03)	135 (.93)	110 (.76)	75 (.52)	50 (.34)	-0- (-0-)	-0- (-0-)	-0- (-0-)	-0- (-0-)	-0- (-0-)	-0- (-0-)	-0- (-0-)
			150 (1.03)	140 (.97)	130 (.90)	120 (.83)	-110- (.76)	-100- (.70)	-90- (.62)	-80- (.55)	-70- (.48)	-60- (.41)	-50- (.34)	-0- (-0-)

Track Your Shipment
Advanced Product Search

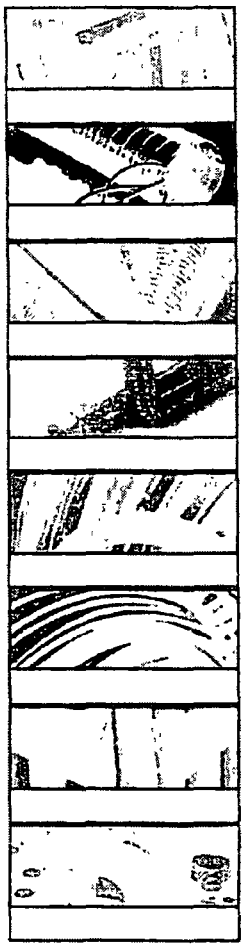

Item # AL-D100 Aluminum Part D Female Coupler x Female NPT

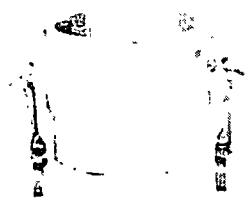

Larger Image

Aluminum Part D Female Coupler x Female NPT

• These couplers are supplied with locking feature safety clips may be inserted to lock handles preventing disconnection during product transfer

Locking Feature

PDF Catalog

Specifications

Size	1 Inches
Weight (per Piece)	0.420 lbs
Standard Carton	30 pcs
Application / Material Conveyed	Agriculture Chemicals/Petroleum Construction Material Handling
Handles	Forged Brass
Slot Pins	Zinc-plated carbon steel
Pull Rings	Zinc-plated carbon steel
Gaskets	Buna-N
Safety Clips	Zinc Plated Carbon Steel
Operating Pressure	250 PSI
Locking Feature	Safety clips may be inserted to lock handles preventing disconnection during product transfer
Max Temperature	Ambient
Note	All sizes except 5" and 8" are made to comply with MIL Spec A A-59326 for interchangeability. Sizes 5" & 8" comply with ASTM Specifications for interchangeabilit

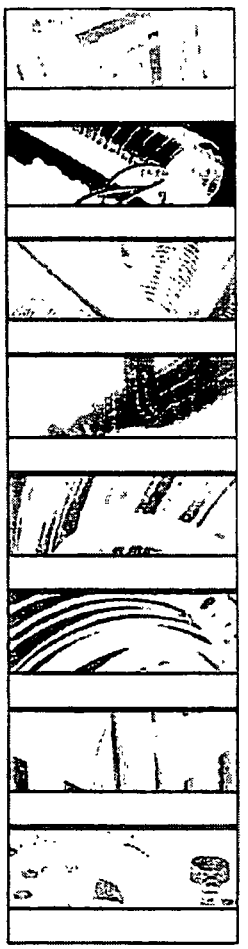

Item # AL-A100 Aluminum Part A Male Adapter x Female NPT

Aluminum Part A Male Adapter x Female NPT

Applications

- Agriculture
- Chemicals/Petroleum
- Construction
- Material Handling

Aluminum alloy, specially designed for high tensile strength lightness and rigidity

PDF Catalog

Larger Image

Specifications

Size	1 Inches
Weight (per Piece)	0.120 lbs
Standard Carton	70 pcs
Application / Material Conveyed	Agriculture Chemicals/Petroleum Construction Material Handling
Handles	Forged Brass
Slot Pins	Zinc-plated carbon steel
Pull Rings	Zinc-plated carbon steel
Gaskets	Buna-N
Safety Clips	Zinc Plated Carbon Steel
Operating Pressure	250 PSI
Max Temperature	Ambient
Note	All sizes except 5" and 8" are made to comply with MIL Spec A-A-59326 for interchangeability. Sizes 5" & 8" comply with ASTM Specifications for interchangeability