POOR LEGIBILITY

ONE OR MORE PAGES IN THIS DOCUMENT ARE DIFFICULT TO READ
DUE TO THE QUALITY OF THE ORIGINAL

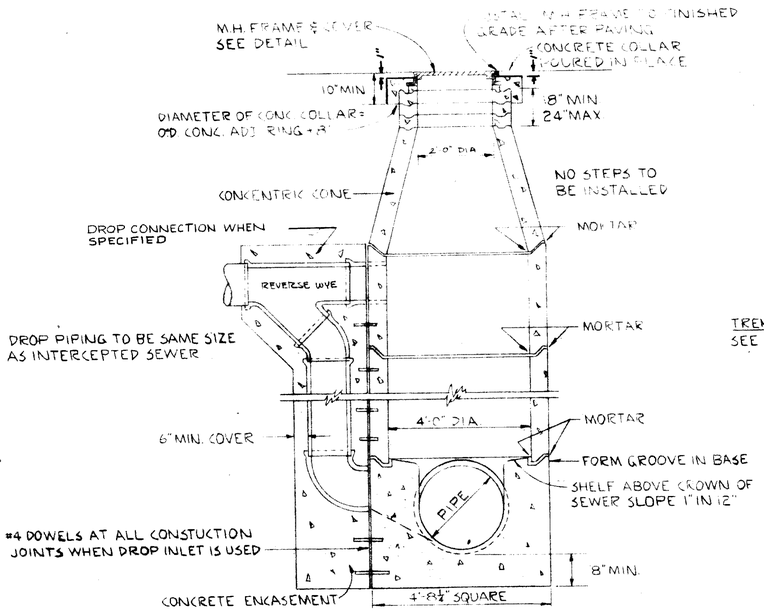

STANDARD MANHOLE
(SHOWN WITH DROP CONNECTION)

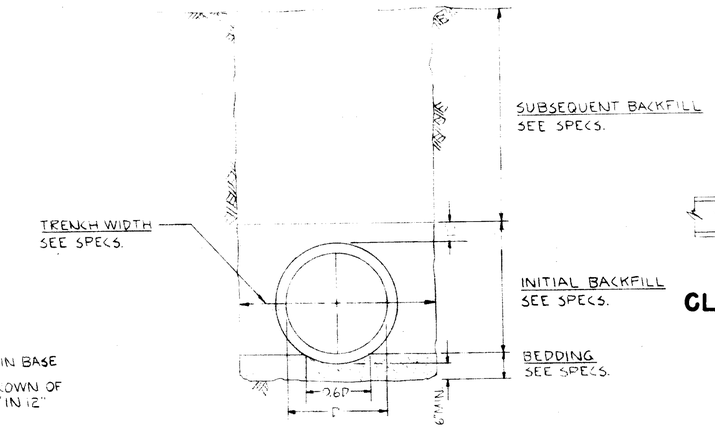

TRENCH BACKFILL

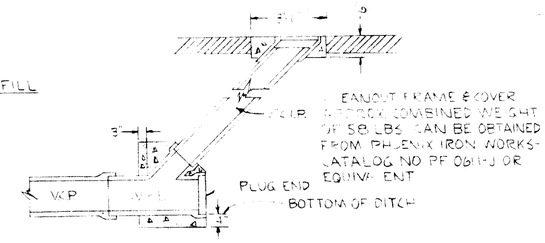

CLEANOUT DETAIL

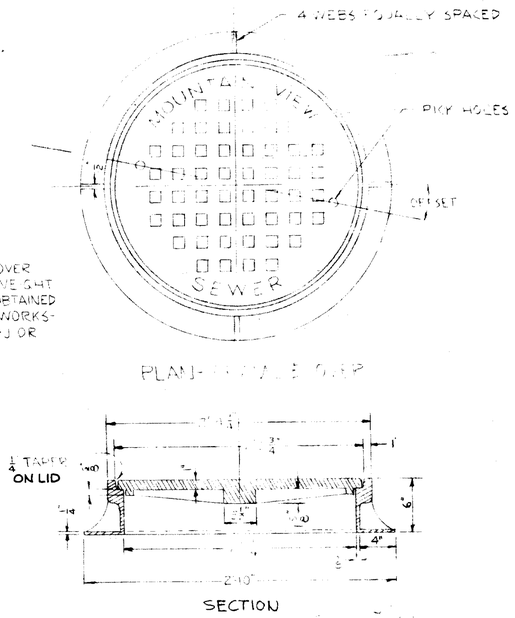

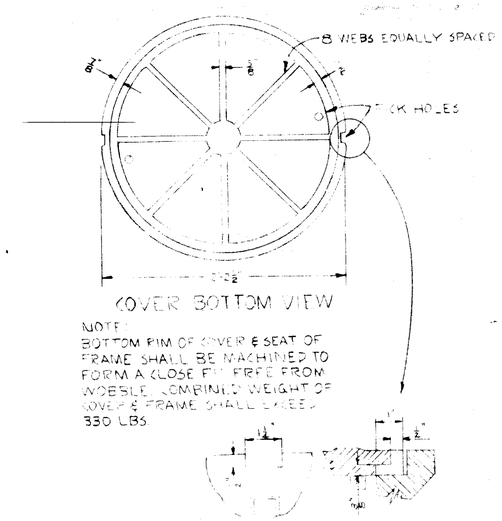

MANHOLE FRAME & COVER DETAIL

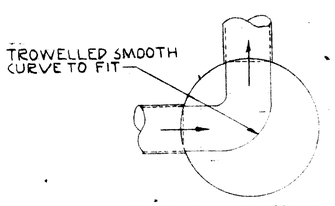

TYPICAL CURVED MANHOLE

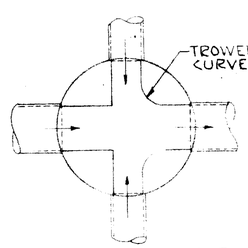

TYPICAL MANHOLE WITH 2 BRANCHES

NOTE:
THE TOP HALF OF THE PIPE SHALL BE REMOVED TO THE CONTOUR OF THE INSIDE OF THE MANHOLE & THE BROKEN EDGES SHALL BE PLASTERED SMOOTH WITH CEMENT GROUT. TYPICAL FOR ALL MANHOLES.

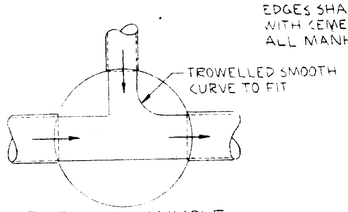

TYPICAL MANHOLE WITH 1 BRANCH

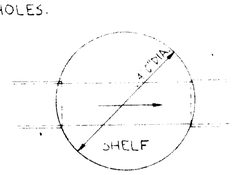

TYPICAL STRAIGHT THROUGH MANHOLE

STANDARD MANHOLE SECTIONS

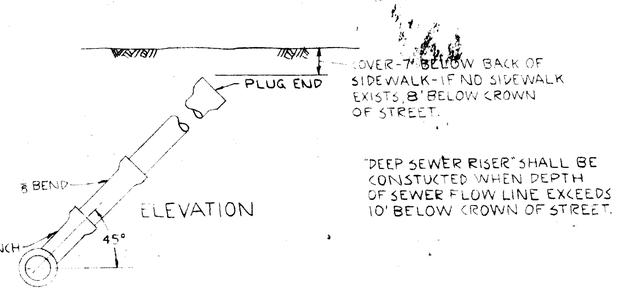

6" V.C.P. DEEP SEWER RISER

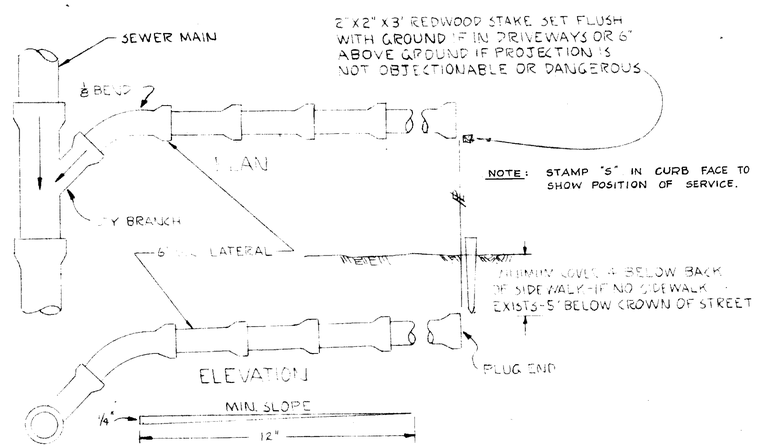

SEWER SERVICE DETAIL

4	REVISED "DROP CONNECTION" NOTE	8-3-62	AHA.	
3	ADDED NOTE: "STAMP 'S' IN ... SERVICE" REMOVED "BACK OF SIDEWALK"	3-26-62	AHA	
2	TRACED & REDRAWN FROM ORIGINAL	2/ /61	MLF	WES
1	ADDED "DEEP SEWER RISER"	2/ /61	BMH	WES
NO	REVISION	DATE	DRW	CK

CITY OF MOUNTAIN VIEW, CALIFORNIA
DEPARTMENT OF PUBLIC WORKS

STANDARD SEWER DETAILS

SCALE: NONE | DATE: FEB 6, 1961 | SHEET OF

DES. YOUNG
DR.
CK.
CK.

APPROVED: Bruce L. Lawson, ASST. DIRECTOR OF PUBLIC WORKS
8-6-61 DATE | 11701 R.C.E. NO.

FIELD NOTES
FILE NO.

Speed #9 4216-05