SDMS DOCID # 1150020

23 March 2011

Groundwater Investigation Report and First Quarter 2011 Groundwater Monitoring Report

Former CENCO Refinery
12345 Lakeland Road, Santa Fe Springs, CA

SLIC No. 0318, ID No. 2040071
CAO 97-118

Prepared on Behalf of

Isola Law Group, LLP
Lodi, California

Prepared for

Regional Water Quality Control Board
Los Angeles Region

Prepared By

MUREX environmental, inc

I, Michael Barranco, do hereby declare, under penalty of perjury under the laws of the State of California, that I am the Environmental Coordinator for Lakeland Development Company, that I am authorized to attest to the veracity of the information contained in the report described herein, and that the information contained in the Groundwater Investigation and First Quarter 2011 Groundwater Monitoring Report, dated March 23, 2011, is true and correct, and that this declaration was executed at Lakeland Development, in Santa Fe Springs, California on March 23, 2011.

Signed,

Michael Barranco

TABLE OF CONTENTS

TABLE OF CONTENTS ii
1.0 INTRODUCTION 1
1.1 Purpose 1
1.2 Site Description and History 1
2.0 WELL REPLACEMENT PROGRAM 3
2.1 Preparatory Work 3
2.2 Monitoring Well Installation 4
2.2.1 Drilling & Sampling 4
2.2.2 Free Phase Petroleum Hydrocarbon Sampling 5
2.2.3 Monitoring Well Construction 5
2.2.4 Well Development and Groundwater Sampling 5
2.2.5 Well Surveying 5
2.2.6 Waste Disposal 6
3.0 GROUNDWATER SAMPLING ACTIVITIES 7
3.1 Monitoring Network 7
3.2 Groundwater Gauging 7
3.3 Free-Phase Petroleum Hydrocarbon (FPPH) Measurements 8
3.4 Groundwater Purging 8
3.5 Groundwater Sampling and Analysis 9
3.6 Quality Assurance/Quality Control 9
3.6.1 Trip Blanks 9
3.6.2 Duplicates 9
3.6.3 Equipment Blanks 10
4.0 RESULTS & DISCUSSION 11
4.1 Groundwater Surface Elevations and Gradient 11
4.2 Free-Phase Petroleum Hydrocarbons 12
4.3 Groundwater Analysis 12
4.3.1 TPHg 12
4.3.2 VOCs and Oxygenates 13
4.3.3 Hexavalent Chromium 14
4.3.5 Biodegradation Parameters 14

4.3.6 QA/QC 16
5.0 SUMMARY & CONCLUSIONS 17
5.1 Groundwater Surface Elevations and Gradient 17
5.2 Free-Phase Petroleum Hydrocarbons 17
5.3 Groundwater Quality 18
5.3.1 Off-Site Sources 18
5.4 Biodegradation 20
6. REFERENCES 21
7. CLOSING 22

List of Tables

Table I Well Construction Details

Table II Summary of Groundwater Level Measurements

Table III Summary of Emergent Chemicals and TPH Results

Table IV Summary of VOC and Oxygenate Results

Table V Summary of Biodegradation Parameters

List of Figures

Figure 1 Site Location Map

Figure 2 Site Plan Showing Monitoring Well Locations

Figure 3 Site Plan Showing Groundwater Surface Elevations October 2010

Figure 4 Site Plan Showing TPHg Isoconcentration Contours November 2010

Figure 5 Site Plan Showing Benzene Isoconcentration Contours and MTBE Concentrations November 2010

List of Appendices

Appendix A Regulatory Correspondence

Appendix B Los Angeles County DEH Well Permits

Appendix C Boring Logs

Appendix D Well Construction Diagrams

Appendix E Well Development Logs

Appendix F Soil Disposal Waste Manifests

Appendix G Groundwater Monitoring Field Forms

Appendix H Analytical Laboratory Reports

1.0 INTRODUCTION

On behalf of Isola Law Group, LLP, Murex Environmental (Murex) has prepared this *Groundwater Investigation Report and First Quarter 2011 Groundwater Monitoring Report* for CENCO Refining Company for its former refinery located at 12345 Lakeland Road in Santa Fe Springs, California (site; **Figure 1**).

This report reflects changes to the groundwater monitoring and reporting program and the addition of fifteen new monitoring wells to the well network, as described in the September 3, 2010 workplan titled "Groundwater Investigation and Monitoring Workplan" prepared by Murex, and approved by the California Regional Water Quality Control Board, Los Angeles Region (RWQCB) on October 21, 2010 (see attached letter, **Appendix A**).

1.1 Purpose

The objective of the monitoring is to evaluate groundwater quality beneath the site and adjacent properties (**Figure 2**). This report presents the well installation and development activities as well as the groundwater monitoring activities performed between December 3, 2010 and February 14, 2011, in accordance with the RWQCB Cleanup and Abatement Order (CAO) No. 97-118.

1.2 Site Description and History

The site is approximately 55 acres in size and is bordered to the north by Florence Avenue, to the south by Lakeland Road, and to the east by Bloomfield Avenue (**Figure 2**). Commercial/light industrial properties border the site to the west. The site was operated as an oil refinery from the 1930s until July 1995. Historical aerial photographs indicate that the western portion of the site may have been used for agricultural purposes from approximately 1928 to 1938. Oil production-related structures such as ponds and aboveground holding tanks may have also been located onsite during this time period (Haley & Aldrich, Inc. [Haley & Aldrich], 2005). The refinery is not currently in operation; however, some of the refinery structures remain onsite. These structures are scheduled to be removed prior to the redevelopment of the property for commercial/light industrial use.

Previous refining operations included processing crude oil into several grades of fuel including kerosene, leaded gasoline and aviation fuel, unleaded gasoline, jet fuel, high and low-sulfur diesel, fuel oil, and petroleum coke. Soil and groundwater quality beneath and in proximity to the site have been impacted by past site operations. Soil and groundwater investigations are being conducted pursuant to two CAOs (Nos. 85-17 and 97-118) issued by

the RWQCB to Powerine Oil Company (CENCO Refining Company) in 1985 and 1997 (Haley & Aldrich, 2005).

2.0 WELL REPLACEMENT PROGRAM

The groundwater elevation in the vicinity of the site has dropped approximately 25 feet since groundwater monitoring started in 1988, and as a result, nineteen of the monitoring wells measured quarterly by Lakeland had gone dry as of July 2010. Regionally, groundwater elevations have decreased as a result of California's drought; however, the drop in groundwater levels locally is likely also influenced by municipal groundwater pumping operations.

The LARWQCB requested the replacement of the dry monitoring wells in their letter dated July 22, 2010 (see **Appendix A**). Murex prepared a workplan to install fifteen new monitoring wells in locations on the site and in locations to the south (see **Figure 2**). The well locations were selected to address data gaps for LNAPL and dissolved-phase hydrocarbon plume delineation cross-gradient and downgradient.

2.1 Preparatory Work

Prior to the start of the field mobilization, several preliminary tasks were completed. These include:

1. Access Agreements - Lakeland obtained access agreements for the installation of the proposed monitoring wells and the ongoing sampling of groundwater at the Metropolitan State Hospital, as well as the "Coaster" and "Bloomfield" properties to the south and east.

2. Health & Safety – Murex updated the Site Health & Safety plan to address activities associated with the well installation.

3. Mark-Out – Murex visited the Site and marked the proposed well locations using white paint. The locations for well MW-707 and MW-708 were moved about 100 feet south of the proposed locations due to access issues. The LARWQCB was notified of the changes prior to installation and approval was given for the new locations (see **Appendix A**).

4. Utility Clearance
    a. Murex notified Underground Services Alert (USA) of the impending subsurface work one week prior to the start of drilling. USA marked the locations of public and private utilities on the public property, and noted where utilities enter private land.

b. Murex also reviewed available utility and as-built drawings of the former Powerine refinery, and walked the locations with facility personnel before finalizing the drilling locations of the wells.
c. Murex performed a geophysical survey to locate underground utilities in the vicinity of proposed drilling locations using electromagnetic pipe and cable scanning devices, induction and metal detection, and ground penetrating radar (GPR).

5. Well Permits – Murex procured well installation permits from the Los Angeles County Department of Environmental Health for the installation of 15 groundwater monitoring wells (**Appendix B**).

6. Notifications – Murex made the following notifications:

    a. Notified the LARWQCB 5 days prior to the start of field work; and
    b. Notified the various surrounding facilities for access of proposed field activities at least 5 days prior to the start of field work.

2.2 Monitoring Well Installation

Fifteen wells were installed as per the approved workplan, with the exception of the modified locations of wells MW-707 and MW-708, as discussed above and approved by the LARWQCB. The following presents the well specifications, development, and sampling.

2.2.1 Drilling & Sampling

Murex conducted the drilling operation under an approved health and safety program, using WDC Exploration (WDC), a licensed California driller, and under the direction of a California-registered civil engineer. Borings were advanced using a 10-inch hollow-stem auger, using a split-spoon drive hammer to collect soil samples at every 5 feet for lithologic logging. Soil samples were screened in the field using a photo-ionization detector (PID). No analytical sampling was proposed for the vadose zone or saturated zone soils.

Murex logged the soil samples based on ASTM Method D2248 "Standard Practice for Description and Identification of Soils (Visual-Manual Procedure)," also known as the United States Unified Soils Classification System, or USCS. See **Appendix C** for soil boring logs.

2.2.2 Free Phase Petroleum Hydrocarbon Sampling

At selected well locations, an approximate 25-foot length of continuous core sampling were performed from approximately 20 feet above- to approximately 5 feet below the water table. The cores were examined for the visual presence of NAPL, and screened using a PID. PID readings are included in the boring logs, in **Appendix C**.

2.2.3 Monitoring Well Construction

The wells were installed to a depth of 130 ft-bgs. The wells were screened approximately 25 feet below and above the water table to accommodate for future groundwater elevation fluctuation. The wells were constructed from schedule 40 PVC casing and screen with a diameter of 4 inches. A minimum of a 3-foot seal above the filter pack was installed of bentonite chips and hydrated with water. The well annulus above the screened interval was backfilled with cement-bentonite grout. In paved or concrete surfaces not prone to flooding, the surface completion was constructed with an EMCO-Wheaton traffic-rated well box set in concrete, slightly raised from the ground surface elevation. In unpaved or areas prone to flooding, the surface completion was constructed using an 8-inch steel riser, set in concrete and surrounded by steel/concrete bollards for protection from vehicles. The completed well construction diagrams, which depict total depth, screen interval, screen slot and filter pack are included in **Appendix D**.

2.2.4 Well Development and Groundwater Sampling

After a minimum of 72 hours subsequent to well installation, the monitoring wells were developed using a surge block to bring fines into the well annulus and further settle the filter pack. The wells were then purged of groundwater using a submersible pump. During the purging process, pH, turbidity, temperature, and specific conductivity were measured and recorded. Purging was continued until successive measurements stabilize within a range of 10 percent for each parameter, with an emphasis on reducing the turbidity to the lowest practical value achievable. The field data for well development are provided in **Appendix E**.

2.2.5 Well Surveying

The newly installed and existing groundwater monitoring wells were surveyed by Psomas, a State-licensed surveyor. The wellhead casing elevation was surveyed to the nearest 0.01 foot. The top of the well casing were notched and permanently marked with the survey point upon which subsequent water measurements will be obtained.

Selected existing monitoring wells were also surveyed to check the consistency of data and confirm benchmark coordinates. After examining the survey data, significant (i.e., greater

than 0.5 ft) differences were discovered with legacy well coordinate and elevation values. As a result, all of the monitoring wells not surveyed in 2011 were surveyed by Psomas. The revised well elevation data is included in **Table I**, and the final surveyed locations of the wells are shown on **Figure 2**.

2.2.6 Waste Disposal

Waste soil generated during drilling was collected and temporarily stored in covered roll-off bins, while profiling could be completed. Once profiled, the waste soil was transported for disposal as non-hazardous waste to Soil Safe of Adelanto, California. A total of approximately 70 tons of waste soil was generated during the drilling, and was stored and transported within 6 bins. Copies of waste soil manifests are included in **Appendix F**.

3.0 GROUNDWATER SAMPLING ACTIVITIES

Quarterly groundwater monitoring has been conducted since August 1986. The previous monitoring event was performed by Murex in November 2010. The following subsections summarize work completed during the first quarter 2011 monitoring event.

3.1 Monitoring Network

The quarterly groundwater monitoring program currently includes the existing 44 wells and the newly installed 15 wells, as listed in **Table I** and shown on **Figure 2**. These wells include:

- Twenty-two onsite groundwater monitoring wells: MW-101, MW-103, MW-104A, MW-105, MW-201, MW-202, MW-204, MW-205, MW-504, MW-701, MW-702, MW-703, MW-704, MW-705, MW-706, W-9, W-10, W-11, W-12, W-17A, W-17B, and W-17C;

- Twenty-five downgradient offsite groundwater monitoring wells of which:

    - Four are located on the former Lakeland property: MW-501A, MW-502, MW-503B, and MW-707; and

    - Twenty-one are located on the Metropolitan State Hospital (MSH) property: MW-600A, MW-601A, MW-603, MW-604, MW-605, MW-606, MW-607, MW-708, MW-709, MW-710, MW-711, MW-712, MW-713, MW-714, MW-715, W-14A, W-14B, W-14C, W-15A, W-15B, and W-15C;

- Seven offsite groundwater monitoring wells located to the southeast on the Walker property including: EW-1, W-1, W-3A, W-4, W-16A, W-16B, and W-16C;

- Three offsite groundwater monitoring wells located to the east on the Bloomfield property that include: MW-106A, MW-107A, and MW-203; and

- Two onsite deep former water production wells identified as W-7 and W-8.

3.2 Groundwater Gauging

Murex inspected and measured the depth to groundwater in 56 out of the 59 wells on January 28, 2010. Of those, 18 wells were dry, 1 was inaccessible, and 4 contained free-phase petroleum hydrocarbon (FPPH) as follows:

- Wells containing only groundwater: MW-104A, MW-106A, MW-107A, MW-503B, MW-701, MW-702, MW=703, MW-704, MW-705, MW-706, MW-707, MW-708, MW-709, MW-710, MW-711, MW-712, MW-713, MW-715, W-1, W-4, W-7, W-8, W-9, W-10, W-12, W-14A, W-14B, W-14C, W-15A, W-15B, W-15C, W-16A, W-16B, W-16C, W-17A, W-17B, and W-17C;
- Dry wells: MW-101, MW-103, MW-105, MW-201, MW-202, MW-203, MW-204, MW-205, MW-501A, MW-502, MW-504, MW-600A, MW-601A, MW-603, MW-604, MW-605, MW-606, MW-607, and W-3A;
- Wells with FPPH: EW-1, MW-503B, MW-708, and W-11.

Table II summarizes the groundwater elevation measurements.

3.3 Free-Phase Petroleum Hydrocarbon (FPPH) Measurements

During gauging, wells are also checked for the presence and thickness of free-phase petroleum hydrocarbons (FPPH) product. Wells that initially exhibit the presence of FPPH are purged until they become dry or until approximately 10 well volumes are evacuated. Thereafter, the wells are inspected for the return of FPPH and if present, it's thickness is measured over longer and longer time intervals (1 hour, 2 hours, 4 hours, 24 hours, 2 days, 4 days, and 7 days).

For wells in which FPPH does not return within the first day, groundwater is sampled for analysis. For wells in which FPPH does return, the rate at which the material returns is monitored and recorded.

Further discussion of the wells exhibiting free product and the results of other testing will be discussed in the forthcoming *FPPH Investigation Report*.

3.4 Groundwater Purging

The existing groundwater monitoring wells that contained groundwater, with the exception of production wells W-7 and W-8, were purged via a dedicated vacuum stinger that was connected to a truck-mounted vacuum pump truck operated by Nieto & Sons. During purging, extracted groundwater volume and quality were monitored for flow rate, temperature, pH, turbidity, electrical conductivity, dissolved oxygen (DO), oxidation-reduction potential (ORP), color, and odor. The results of the field parameter monitoring are summarized in Table V. Purged groundwater was disposed of by Nieto & Sons at the wastewater treatment system in operation at the site.

New monitoring wells MW-701 through MW-715 were purged during the well development phase and were sampled by disposal bailer approximately 72 hours after the completion of development. These wells will be purged using dedicated stingers, like the existing wells, for sampling events in the future.

3.5 Groundwater Sampling and Analysis

Following purging, groundwater samples were collected by disposable bailer from the 40 wells in sample containers (preserved with hydrochloric acid based on the analytical method), which were stored in pre-cooled ice chests and transported under proper chain-of-custody (COC) procedures to Sunstar Laboratories, Inc. (Sunstar Labs) of Lake Forest, California, California Department of Public Health Environmental Laboratory Accreditation Program (ELAP) # 2250. All collected samples were analyzed for the following:

- Total petroleum hydrocarbons as gasoline (TPHg) by U.S. Environmental Protection Agency (USEPA) Method 8015M, and

- Volatile organic compounds (VOCs) with oxygenates by USEPA Method 8260B.

- Field parameters including pH, dissolved oxygen (DO), and oxidation-reduction potential (ORP)

Results of the aforementioned laboratory analyses are summarized in **Table III** (Summary of TPH and Emergent Chemicals) and **Table IV** (Summary of VOCs). Results of the field-measured parameters are shown in **Table V**.

3.6 Quality Assurance/Quality Control

As per the Quality Assurance/Quality Control (QA/QC) plan, Murex collected and submitted field duplicate samples and trip blanks for laboratory analysis as a quality assurance/quality control measure.

3.6.1 Trip Blanks

Trip blanks (provided by SunStar Lab) accompanied each daily groundwater sample shipment, except for on the first day of sampling, to evaluate the potential contamination of field samples during storage and transport. Trip blanks were analyzed for VOCs only.

3.6.2 Duplicates

Duplicate samples, which assess the precision of the laboratory analyses, were collected from wells EW-1, MW-104A, MW-704, and MW-710. This represents a duplicate frequency

equal to approximately 10% relative to the total number of wells sampled. The duplicates followed the same analytical protocols as their respective primary samples.

3.6.3 Equipment Blanks

Equipment blanks were not collected because dedicated stingers were used to purge the wells and new disposable bailers were used for sampling, therefore eliminating cross-contamination between wells during the purging and sampling process.

4.0 RESULTS & DISCUSSION

This section presents the results of the first quarter 2011 groundwater monitoring event. As mentioned earlier in the report, well completion details (as adapted from Dan Herlihy Environmental Services, 2006) are provided in **Table I**. Groundwater level measurements, depths to water and FPPH, and groundwater elevations are summarized in **Table II**. Comprehensive analytical results, including historical and recent results, are compiled in **Tables III and IV**. **Table V** contains a summary of bio-attenuation and field-measured parameter readings.

Figure 3 shows the groundwater elevation measured at each monitoring well, as well as the overall gradient and direction of groundwater flow. **Figure 4** depicts the concentrations and estimated contour lines of TPHg measured in each well, and **Figure 5** shows similar concentrations and contour lines for benzene and MTBE.

Well measurement and groundwater sampling forms are attached as **Appendix G**. Laboratory reports and completed COCs are included in **Appendix H**.

The presentation of the results in this report does not distinguish between site- and non-site-related constituents although there are indications of non-site-related contamination in groundwater, which is discussed further below.

4.1 Groundwater Surface Elevations and Gradient

Groundwater surface elevations were calculated for each well by subtracting the water level measurement from the top of casing elevation (**Tables I and II**). Groundwater elevations were adjusted for wells containing FPPH, assumed to have a relative density of 0.80, which is typical for mean density of various petroleum hydrocarbon mixtures. Groundwater elevations, contour lines, flow direction and gradient are shown on **Figure 3**.

Based on groundwater level measurements obtained on January 28, 2011, first-encountered groundwater beneath the site vicinity ranges in elevation from 11.32 to 50.43 feet above mean sea level (ft-amsl), a slightly higher range than in the previous quarter. Groundwater elevations have exhibited both increases and decreases since previous measurements taken in October 2010, likely attributable to higher than average precipitation during the winter season. The increases, the first to occur for several years, were minor in shallow wells (less than 1.0 foot in wells W-10, W-11, W-15A, MW-104A, etc.) and were significant in deeper wells (7 to 10 feet in wells W-16B, W-16C, W-17B, and W-17C). These wells exhibiting the most significant increases were also the wells exhibiting

the most significant decreases during the previous reporting period, indicating that there is likely influence from municipal pumping operations that most strongly affects wells that are more deeply screened, and that the influence originates from the northeast. Most likely, one or more pumping wells was recently deactivated as water demand decreased during the rainy season.

As a whole, the average change in groundwater elevation over all wells measured was an increase of 2.16 feet.

The average horizontal groundwater gradient is approximately 0.007 foot per foot (ft/ft), as shown in **Figure 3**, which is an increase since the previous monitoring period, and represents what is considered a moderately steep gradient. The groundwater flow direction originates from the northeast and turns south across the area of study. This flow direction is relatively consistent with those historically reported in previous investigations.

4.2 Free-Phase Petroleum Hydrocarbons

Measurable FPPH, also known as light non-aqueous-phase liquid or LNAPL, was detected in monitoring wells EW-1, MW-503B, MW-708, and W-11 (**Table II**). FPPH was measured at a thickness of 0.44 feet in EW-1, 0.63 feet in MW-503B, 0.13 feet in MW-708, and 0.58 in W-11. During previous monitoring events, FPPH was detected in wells EW-1 and W-11, as well as in MW-502, MW-504, and W-3A. The three latter wells were dry during this event.

4.3 Groundwater Analysis

Groundwater analytical results are summarized in **Tables III and IV**, and laboratory reports and completed COCs are included in **Appendix H**.

4.3.1 TPHg

First quarter 2011 TPHg results are presented in **Table III** and **Figure 4**. TPHg was detected in 33 out of the 40 wells sampled at concentrations ranging from 60 micrograms per liter (µg/L) in monitoring well W-14C to 530,000 µg/L in monitoring well MW-708.

Groundwater samples collected from monitoring well MW-503B again exhibited the largest increase in TPHg concentrations when compared to the previous monitoring event (from 3,700 µg/L in August 2010 to 57,000 µg/L). Another significant increase was measured in well W-15A, where a concentration of 14,000 was measured. This represents the first time concentrations in W-15A have exceeded their historical maximum (2,700 ug/L) measured during its first sampling in February 2008.

The most significant decrease was observed in monitoring well W-11, where TPHg concentrations dropped from 77,000 µg/L to 10,000 µg/L during the same period.

4.3.2 VOCs and Oxygenates

A summary of VOC and oxygenate analytical data for the fourth quarter 2010 is presented in **Table IV**, along with historical data from previous monitoring events.

4.3.2.1 Benzene, Toluene, Ethylbenzene, and Xylenes (BTEX)

Benzene was detected in samples collected from 27 wells at concentrations ranging from 0.84 µg/L in well MW-710 to 2,600 µg/L in well W-10 (**Figure 5**) (25 of these wells contained benzene at concentrations exceeding the 1 µg/L California Maximum Contaminant Level (MCL) in drinking water). Benzene concentrations in the fourth quarter of 2010 were similar to concentrations observed during previous monitoring events.

Of the other BTEX compounds analyzed for, toluene was detected in samples from 21 wells at concentrations ranging from 0.54 µg/L in W-16C to 7,700 µg/L in MW-503B. Toluene was detected above its California MCL (150 µg/L) in 6 wells.

Ethylbenzene was detected in the samples collected from 17 wells at concentrations ranging from 0.55 µg/L in W-15B to 3,000 µg/L in MW-708. Ethylbenzene was detected above its California MCL (300 µg/L) in 5 wells this quarter.

Total xylenes, including the *ortho, meta,* and *para* isomers, were detected in samples from 18 wells at concentrations ranging from 1.7 µg/L in MW-713 to 20,900 µg/L in MW-503B. Xylene was detected above the California MCL (1,750 µg/L) in 5 wells.

4.3.2.2 Methyl tert-Butyl Ether (MTBE)

The oxygenate MTBE was detected in samples from 13 wells at concentrations ranging from 2.8 µg/L in MW-709 to 430 µg/L in MW-704 (**Figure 5**). The 13 µg/L drinking water MCL established for MTBE in California was exceeded in 7 wells.

4.3.2.3 tert-Butyl Alcohol (TBA)

TBA, another oxygenate and a byproduct of MTBE breakdown, was detected in 13 of the 40 sampled wells at concentrations ranging from 21 µg/L in well W-15B to 390 µg/L in well W-15A. The California Notification Level (formerly Action Level) and Response Level for Drinking Water for TBA is 12 µg/L. All of the 3 TBA detections exceeded this limit in the fourth quarter.

4.3.2.4 Other VOCs

In addition to the aforementioned constituents of concern, several VOCs were detected in groundwater during this monitoring event. Some of these compounds, such as n-propylbenzene and trimethylbenzene, for instance, are related to petroleum hydrocarbon releases. Conversely, also detected were chlorinated solvents, such as tetrachloroethene (PCE), trichloroethene (TCE), and cis-1,2-dichloroethene (cis-1,2-DCE), among others, which we believe are the result of off-site contamination entering the Lakeland well network.

The most significant detections of chlorinated compounds are described as follows: to the east, in well W-16B and W-16C, cis-1,2-DCE and trans-1,2-DCE are were detected between 50-100 ug/L; to the west of the Lakeland TPH plume, in well MW-710, PCE and TCE were detected at concentrations between 50-100 ug/L. It is likely that these detections are indicative of at least two separate sources of solvents in their upgradient direction.

4.3.3 Hexavalent Chromium

Hexavalent chromium was not tested for in any of the groundwater samples collected from the monitoring and production wells during this quarter. In their letter dated October 21, 2010, the RWQCB approved our proposal to remove hexavalent chromium analysis from our groundwater monitoring schedule. This was justified by the fact that hexavalent chromium has not been detected in any wells after approximately 5 years of monitoring.

4.3.5 Biodegradation Parameters

Biodegradation of TPHg most commonly occurs by aerobic, nitrate-reducing, ferric iron (Fe^{3+})-reducing, sulfate-reducing, or methanogenic respiration. TPHg and BTEX serve as electron donors for microbial metabolism in aerobic biodegradation. Electron acceptors include oxygen, nitrate, Fe^{3+}, sulfate, and carbon dioxide.

In general, if sufficient oxygen is present, aerobic biodegradation will occur first. When DO concentrations fall below approximately 0.5 mg/L (an anoxic environment), denitrification will begin if nitrate is present. After most nitrate has been consumed, Fe^{3+} reduction will begin if Fe^{3+} is present. Fe^{3+} concentrations will decrease, while Fe^{2+} concentrations will increase. After most Fe^{3+} is consumed, sulfate reduction will begin if sulfate is available. After most sulfate has been consumed, methanogenesis, which involves carbon dioxide as an electron acceptor, begins. During methanogenesis, methane concentrations increase (Department of the Navy, 1998).

The results discussed below indicate that biodegradation, whether aerobic or anaerobic, may be occurring in the local environment around the wells that were sampled for biodegradation parameters.

4.3.5.1 Field Measured Parameters

Field pH, DO, and oxidation-reduction potential (ORP) data were collected from 25 monitoring wells using an YSI 556 water quality meter (**Table V**). The meter was inserted into grab water samples, collected from the vacuum truck intake during well purging.

• **pH** – This parameter quantifies the acidity or alkalinity of a solution. Results ranged from approximately 6.8 to 8.5, indicating a neutral to slightly alkaline environment that is suitable for the growth of alkalophilic bacteria and microorganisms that thrive at a circumneutral pH.

• **DO** – Oxygen is the preferred electron acceptor in the biodegradation of petroleum hydrocarbons. When aerobic biodegradation occurs, DO concentrations are expected to decline as microorganisms use the electron acceptor during respiration. The vacuum stinger method used to purge the wells introduces oxygen into the groundwater. Therefore, DO data is not representative of the actual oxygen content. It is likely very low in wells exhibiting higher TPH concentrations, since oxygen is the first compound used up in the biological degradation of petroleum.

• **ORP** – This parameter is a measure of electron activity, which reflects the oxidizing or reducing nature of the environment. ORP values are generally negative under reducing conditions (gaining electrons) and positive under oxidizing conditions (losing electrons).

High negative ORP values were observed in most wells within the impacted groundwater areas. Conversely, positive ORP values were noted in wells MW-104A, W-17A, W-16A, W-14A/B/C, and W-15B/C.

Hydrogen sulfide (produced from the reduction of sulfate in groundwater, after oxygen is used up) was detected during purging of wells exhibiting elevated TPH concentrations and low or negative ORP values, which is consistent with our understanding of the conceptual site model, and indicate that aerobic degradation of the hydrocarbons has stalled due to dissolved oxygen limitations. It is likely that the introduction of air (via bioventing for example) will enhance the process of stimulating the aerobic degradation of the constituents of concern at the site.

4.3.5.2 Laboratory Measured Biological Parameters

The current data set of analytical parameters used to indicate biological activity is sufficient for planning purposes, and has been relatively stable for some time. While Murex intends to incorporate a broad array of biological parameter sampling as a part of the proposed pilot test and later during the remediation phase, (detailed information on a proposed remedial pilot test was submitted to and approved by the LARWQCB) it is no longer necessary to collect this information as part of the required quarterly sampling events.

4.3.6 QA/QC

Duplicate sample results are provided alongside their primary sample results in **Tables III and IV**. The results show similar concentrations of the analytes of interest as in their respective primary samples, as would be expected for an ELAP-certified laboratory.

Trip blank samples did not indicate the presence of VOCs, which indicates proper sample storage and confirms a lack of cross-contamination during transport.

Laboratory method blanks did not indicate the presence of VOCs, which indicates that laboratory detection equipment did not exhibit cross-contamination.

Laboratory control and laboratory spike samples exhibited results within acceptable limits, indicating no matrix interference and that the detection equipment were working properly.

5.0 SUMMARY & CONCLUSIONS

Groundwater monitoring was performed at and in the vicinity of the former CENCO refinery in January and February 2011 as part of an ongoing groundwater monitoring plan intended to evaluate chemical impacts, contaminant sources, and overall groundwater quality. This groundwater monitoring event included inspecting/gauging water levels in 59 wells and collecting samples from 40 of those wells for analysis of TPHg and VOCs. This included sampling of all 15 newly installed groundwater monitoring wells, MW-701 through MW-715.

5.1 Groundwater Surface Elevations and Gradient

A horizontal groundwater gradient of approximately 0.007 ft/ft was calculated for the first quarter groundwater monitoring event. This is consistent with historical gradient data for the site vicinity. Averaging all the wells exhibiting measureable groundwater, elevations have increased (although it dropped in select individual wells) by approximately 2 feet since the previous quarter. Groundwater flows from the northeast and turns due south across the area of study, which is consistent with historical measurements.

This was the first measurement period for several years in which groundwater elevations increased on the whole, rather than decreased. Most notably, wells MW-16B, MW-16C, MW-17B, and MW-17C exhibited very large increases since October 2010, which may indicate a decrease in pumping activities to the northeast. This is consistent with our understanding of regional municipal pumping activities, as production wells are often shut down during especially rainy seasons.

5.2 Free-Phase Petroleum Hydrocarbons

Measureable free product was identified in four wells; W-11, EW-1, MW-503B, and MW-708. Further, it was not detected in wells MW-704, MW707, or MW-711, despite their position and proximity to wells historically exhibiting free product. In addition, after being purged, free product did not return to well W-11 for almost 2 weeks. Based on these measurements, as well as on historical Rapid Optical Screening Tool (ROST) boring investigations, the estimated outline of FPPH is represented on **Figure 4**.

The FPPH thickness measured in the four wells (0.13 to 0.63 feet) does not necessarily reflect FPPH actual thickness in the surrounding aquifer as fluctuations in water levels and permeability factors can influence FPPH accumulation in monitoring wells.

Murex will further characterize the extent of free-phase petroleum hydrocarbon impact beneath the vicinity of the site, since approval has been granted by the RWQCB to implement the FPPH Investigation Workplan dated September 3, 2010. A formal report will be prepared once the investigation is complete, and will be submitted to the RWQCB.

5.3 Groundwater Quality

The installation of 15 new groundwater wells has provided new groundwater data that allows for the monitoring of the plume emanating from the Lakeland site as well as regional groundwater quality with improved detail.

The highest concentrations of TPHg detected during this sampling event were in the north-central and southwestern portions of the site, as well as due south of these areas beneath the former Lakeland property and the northern portion of the MSH (see **Figure 4**). The maximum concentrations of TPHg were measured in wells exhibiting FPPH, as high as 530,000 ug/L in well MW-708, located on the MSH property.

Benzene, toluene, ethylbenzene, zylene, and other compounds associated with petroleum hydrocarbons largely mimic TPHg in their presence and relative concentrations in the areas associated with the Lakeland plume. The maximum concentration of benzene was detected in well W-10, at 2,600 ug/L. The maximum concentration of MTBE was detected in well MW-704 at 430 ug/L. Both of these wells are located on-site (see **Figure 5**).

The apparent full footprint of the groundwater plume has been delineated as a result of the data collected from the new monitoring wells. Lakeland will continue to monitor the plume for changes in shape or size.

5.3.1 Off-Site Sources

In addition to historic releases from the Lakeland site, data collected from the monitoring well network (see **Figures 4 and 5**) exhibits evidence of possibly four or more other contaminant plumes, including both other petroleum hydrocarbon plumes as well as solvent plumes. We believe the following plumes exist as a result of releases outside of the former refinery's operations on site, and have and have identified them based on their characteristics:

<u>"Lakeland Road/Bloomfield TPH" Plume</u>

FPPH is typically measured in well EW-1, and historically was measured in well W-3A before it became a dry well. The FPPH collected in well EW-1 is more viscous and darker in color than FPPH collected in other wells on and downgradient of the

site. Based on the direction of groundwater flow in this area, the release location is likely to the northeast of well EW-1, and may extend as far south as well MW-15A (its recent TPH concentration was 14,000 ug/L, its recent benzene concentration was 1,400 ug/L, and its recent MTBE concentration was 260 ug/L – see **Table III and Table IV**).

"Lakeland/Bloomfield Solvent Plume" (Possibly Omega Chemical Plume)

Elevated cis-1,2-DCE and trans-1,2-DCE concentrations (i.e., between 50 and 70 ug/L) were measured in wells W-16B and W-16C. Historically, these compounds were also detected in wells MW-106, MW-106A, MW-107, MW-107A, and MW-203. Traces of cis-1,2-DCE have begun to be detected more recently in W-4 (see **Table IV**).

The presence of cis-1,2-DCE in the absence of PCE and TCE could indicate that the measurement point represents a leading edge of a solvent plume and is not close to the solvent release (source) area. Complete degradation to the more stable di-chlorinated compounds from parent products PCE and TCE typically takes many years, during which time plumes move downgradient with the flow of groundwater.

The Omega Chemical site (a Superfund site located to the north and upgradient of this area) is being studied and remediated for solvent releases under the Comprehensive Environmental Response, Compensation, and Liability Act (CERCLA). This site is located approximately 2.5 miles northeast, and upgradient of the Lakeland site.

"Western Norwalk/Florence Solvent Plume"

During this sampling event, elevated concentrations of PCE (55 ug/L), TCE (93 ug/L) and 1,1-DCE (41 ug/L) were detected in well MW-710. Historically, wells MW-105, MW-101, MW-201, MW-603, MW-605, W-14B, and W-14C also exhibited elevated concentrations of these chemicals.

This mixture of solvents varies from those detected on the eastern side of the Lakeland well network, as it exhibits a proportionally even blend (see historical results, well MW-105, **Table IV**) of TCE and 1,1-DCE. This is indicative of releases of solvent mixtures of TCE and 1,1,1-TCA, common degreasing agents. Based on the occurrences of detections, the presence of TCE and 1,1-DCE in equal proportions, but lower detections of cis-1,2-DCE, and the direction of flow of groundwater, it is

logical to place the likely location of this release within the vicinity of Norwalk Boulevard and Florence Avenue.

Possible "MSH Plume"

Elevated concentrations of TPH (2,000 ug/L) and benzene (480 ug/L) were detected in well MW-715. This is a new well, and has only been sampled once. Its concentrations are inconsistent with historical concentrations detected in the nearby (now dry) monitoring well MW-606, which exhibited no detections as recently as April 2009.

Further analysis in the future may identify these results as an anomaly, although the results may indicate the presence of petroleum impacts originating from a former UST once located (and thought to have been removed) nearby on the MSH property.

5.4 Biodegradation

Intrinsic biodegradation continues to be viable, in at least some areas of the site and vicinity, based on nitrate, sulfate, Fe^{2+}, methane, alkalinity, and ORP results from previous sampling events conducted at the site. Oxygen has been depleted, as evident by the presence of hydrogen sulfide in the deep subsurface (sulfate reduction reactions result in the formation of hydrogen sulfide). Since the main limiting factor for biodegradation of petroleum hydrocarbons is oxygen, the mechanical introduction of oxygen could stimulate aerobic biodegradation of the VOCs present in groundwater.

Murex intends to conduct pilot testing at the site to determine the appropriate remedial technology which will effectively enhance biodegradation of the constituents of concern and reduce the extent of groundwater contamination.

5.5 Recommendations

Murex, on behalf of Lakeland, has submitted the RWQCB-requested workplans for 1) replacement of groundwater monitoring wells, 2) assessment of FPPH, 3) assessment of off-site soil gas, and 4) the evaluation of remedial technologies capable of achieving Site-specific clean-up goals.

With this report, Lakeland has completed the requirement for installing new monitoring wells and providing the RWQCB with the data and updated plume maps. The RWQCB has approved the FPPH Investigation Workplan and the Pilot Test Workplan. Lakeland has begun work on these tasks.

6. REFERENCES

1. Arcadis. 2009. *Second Quarter Groundwater Monitoring Report, Former CENCO Refinery, 12345 Lakeland Road, Santa Fe Springs, California.* Prepared for Isola Law Group, LLP. June 25.

2. Dan Herlihy Environmental Services. 2006. Letter from Dan Herlihy, Principal, to Mr. David Isola, Esq., Isola & Ruiz, LLC, re: Recommendations to Fill Data Gap and Modify Shallow Well Design & Sampling, Community Development Commission of the City of Santa Fe Springs v. Powerine Oil Company et al., Case No. VC039820. September 8.

3. Department of the Navy. 1998. *Technical Guidelines for Evaluating Monitored Natural Attenuation of Petroleum Hydrocarbons and Chlorinated Solvents in Ground Water at Naval and Marine Corps Facilities.* September.

4. Gustafson, J.B., Tell, J.G., Orem, D., 1996. Total Petroleum Hydrocarbon Criteria Working Group (TPHCWG): Selection of Representative TPH Fractions Based on Fate and Transport Considerations. Volume 3.

5. Haley & Aldrich, Inc. 2004. *Draft 2004 Semi-Annual Groundwater Monitoring Report, CENCO Refinery, Santa Fe Springs, California.* October 18.

6. Haley & Aldrich, Inc. 2005. *Additional Site Investigation Work Plan, CENCO Refining Company.* May 9.

7. CLOSING

I certify under penalty of law that this document and all enclosures were prepared under my direction or supervision in accordance with a system designed to assure that qualified personnel properly gather and evaluate the information submitted. The information contained herein is, to the best of my knowledge and belief, true, accurate and complete, however, is reliant upon public agency records, which could be incomplete or inaccurate beyond our control.

Should you have any questions or concerns regarding the material herein, please do not hesitate to contact the undersigned at (714) 508-0800.

Sincerely,
MUREX ENVIRONMENTAL, INC.

REGISTERED PROFESSIONAL ENGINEER
JEREMY R. SQUIRE
JRS
CIVIL # 69466
Exp: June 2012
STATE OF CALIFORNIA

Jeremy R Squire, P.E.
Senior Engineer

Paris Hajali, Ph.D., P.E.
Principal

Table I
Well Construction Details
Former CENCO Refinery
Santa Fe Springs, CA

Well Installation					Completion Data																Location	Reference(s)
Well ID	Date	By	Elevation[1]		Hole Diameter (in)	Casing Diameter (in)	Screen		Depth (ft)						Elevation[1] (ft)							
			Ground Surface	Top of Casing			Slot	Length	Sand Pack		Slotted		Total Depth		Sand Pack		Slotted		Total Depth			
			(ft)	(ft amsl)			(in)	(ft)	Top	Bottom	Top	Bottom	Casing	Hole	Top	Bottom	Top	Bottom	Casing	Hole		
Groundwater Monitoring Wells																						
EW-1	6/11/1905	Emcon	146.85	146.85	-	4	-	-	-	-	-	-	113.5	-	-	-	-	-	-	-	Walker	Versar (2000)
MW-101	8/28/1985	IT	145.19	138.00	12	4	-	20	69.5	90	70	90	90	95	66	45	65	45	45	40	Refinery	IT (1986); Versar (2000); ARCADIS (2003)
MW-103	8/30/1985	IT	137.18	139.36	12	4	-	20	-	-	79	99	99	99.5	-	-	58	38	-	37	Refinery	IT (1986); Versar (2000); ARCADIS (2003)
MW-104	8/24/1985	IT	-	-	12	4	-	20	-	-	76.5	96.5	97	99	-	-	66	46	-	43	Refinery	IT (1986); Versar (2000); ARCADIS (2003)
MW-104A	6/1999	Versar	142.38	144.13	-	4	-	-	-	-	65	100	100	-	-	-	-	-	-	-	Refinery	Versar (2000); measured well depth
MW-105	12/1995	TriHydro		141.16	-	4	-	-	-	-	68	98	98	100	-	-	-	-	-	39	Refinery	Versar (2000); measured well depth
MW-106	12/1995	TriHydro	-	-	-	4	-	-	-	-	74	104	106.45	106	-	-	-	-	42	42	Bloomfield	Versar (2000)
MW-106A	2/20/2006	N&M	152.92	152.81	8	4	0 02	27	82	110	83	110	110	110	70	42	69	42	42	42	Bloomfield	Well completion report
MW-107	12/1995	TriHydro	-	-	-	4	-	-	-	-	75	105	107.55	108	-	-	-	-	41	41	Bloomfield	Versar (2000)
MW-107A	2/20/2006	N&M	147.37	147.02	8	4	0 02	27	82	110	83	110	110	110	64	36	63	36	36	36	Bloomfield	Well completion report
MW-201	9/10/1985	IT	134.86	135.65	12	4	-	30	66	103	72	102	102	103	67	30	61	31	31	30	Refinery	IT (1986); Versar (2000); ARCADIS (2003)
MW-202	9/23/1985	IT	139.00*	140.62	16	4	-	30	58	105	63	93	93	105	70	23	65	35	35	23	Refinery	IT (1986); Versar (2000); ARCADIS (2003)
MW-203	9/13/1985	IT	144.08	143.71	12	4	-	30	64.7	107	77	107	107	119	78	36	66	36	36	24	Bloomfield	IT (1986); Versar (2000); ARCADIS (2003)
MW-204	9/19/1985	IT	141.15	142.90	12	4	-	30	67.5	105	73.3	103.3	103.3	105	73	35	67	37	37	35	Refinery	IT (1986); Versar (2000); ARCADIS (2003)
MW-205	9/14/1985	IT	140.00*	140.09	12	4	-	30	65.5	103	69.5	99.5	99.5	104 5	73	35	69	39	39	34	Refinery	IT (1986); Versar (2000); ARCADIS (2003)
MW-206[2]	9/18/1985	IT	-	-	-	4	-	30	62.5	104	71	101	101	104	67	26	59	29	29	26	Lakeland	IT (1986); Versar (2000); ARCADIS (2003)
MW-501	6/9/1986	IT	-	-	-	4	-	30	-	-	71	101	101	107	-	-	58	28	-	22	Lakeland	IT (1986); Versar (2000); ARCADIS (2003)
MW-501A	3/1999	ATC	131.26	130.89	-	4	-	-	-	-	75	95	95	95	-	-	-	-	-	35	Lakeland	Versar (2000); measured well depth
MW-502	6/11/1986	IT	131.88	131.00	-	4	-	30	-	-	74	104	104	104	-	-	54	24	-	24	Lakeland	IT (1986); Versar (2000); ARCADIS (2003)
MW-503	6/13/1986	IT	-	-	-	4	-	30	-	-	80.5	110.5	110.5	111	-	-	51	21	-	20	Lakeland	IT (1986); Versar (2000); ARCADIS (2003)
MW-503B	1/1999	Versar	133.03	132.66	-	4	-	-	-	-	69	109	109	109	-	-	-	-	-	21	Lakeland	Versar (2000); measured well depth
MW-504	6/18/1986	IT	-	137.18	-	4	-	50	-	-	58	118	95.76	118	-	-	77	17	-	17	Refinery	IT (1986); Versar (2000); ARCADIS (2003)
MW-600	8/15/1990	ENSR	-	-	-	4	-	30	-	-	78	108	108	110	-	-	42	12	-	10	MSH	IT (1986); Versar (2000); ARCADIS (2003)
MW-600A	6/1999	Versar	123.28	124.26	-	4	-	-	-	-	-	-	92.7	100	-	-	-	-	-	20	MSH	Versar (2000); measured well depth
MW-601	8/17/1990	ENSR	-	-	-	4	-	30	-	-	85	115	115	117	-	-	40	10	-	8	MSH	IT (1986); Versar (2000); ARCADIS (2003)
MW-601A	6/1999	Versar			-	4	-	-	-	-	65	100	100	100	-	-	-	-	-	27	MSH	Versar (2000); measured well depth
MW-603	12/1995	TriHydro	121.40	120.95	-	4	-	-	-	-	70	100	100	100	-	-	-	-	-	19	MSH	Versar (2000); measured well depth
MW-604	12/1995	TriHydro	140.52	140.07	-	4	-	-	-	-	73	103	103	103	-	-	-	-	-	35	MSH	Versar (2000); measured well depth
MW-605	12/1995	TriHydro	117.40	116.82	-	4	-	-	-	-	65	95	95	95	-	-	-	-	-	20	MSH	Versar (2000); measured well depth
MW-606	12/1995	TriHydro	116.90	116.06	-	4	-	-	-	-	70	100	100	100	-	-	-	-	-	14	MSH	Versar (2000); measured well depth
MW-607	12/1995	TriHydro	128.92	128.28	-	4	-	-	-	-	77	107	107	107	-	-	-	-	-	19	MSH	Versar (2000); measured well depth
W-1	12/1995	TRC	145.19	144.81	-	4	-	-	-	-	70	129	129	130	-	-	-	-	-	13	Walker	IT (1986); Versar (2000)
W-2[2]	12/1995	TRC	-	-	-	4	-	-	-	-	84	129	129	129	-	-	-	-	-	-	Walker	IT (1986); Versar (2000)
W-3[2]	12/1995	TRC	-	-	-	4	-	-	-	-	82	122	122	124	-	-	-	-	-	-	Walker	IT (1986); Versar (2000)
W-3A	-	-	137.18	136.79	-	4	-	-	-	-	-	-	111.52	115	-	-	-	-	-	21	Walker	Versar (2000)
W-4	12/1995	TRC	143.18	142.56	-	4	-	20	-	-	580	600	609	-	-	-	-	-	-	-	Walker	IT (1986); Versar (2000)
W-9	8/22/2006	TA	140.37	139.84	8	2	0 01	35	73	111	75	110	110	120 5	66	28	64	29	29	19	Refinery	ARCADIS BBL (2006)
W-10	8/21/2006	TA	141.39	140.71	8	2	0 01	35	73	111	75	110	110	130	67	29	65	30	30	10	Refinery	ARCADIS BBL (2006)
W-11	8/25/2006	TA	141.96	142.10	8	2	0 01	35	73	111	75	110	110	119	68	30	66	31	31	22	Refinery	ARCADIS BBL (2006)
W-12	8/23/2006	TA	142.93	145.15	8	2	0 01	35	75	114	75	114	114	120 5	69	30	69	30	30	24	Refinery	ARCADIS BBL (2006)

Table I
Well Construction Details
Former CENCO Refinery
Santa Fe Springs, CA

Well Installation					Completion Data																Location	Reference(s)
Well ID	Date	By	Elevation[1]		Hole Diameter (in)	Casing Diameter (in)	Screen		Depth (ft)						Elevation[1] (ft)							
			Ground Surface	Top of Casing			Slot	Length	Sand Pack		Slotted		Total Depth		Sand Pack		Slotted		Total Depth			
			(ft)	(ft amsl)			(in)	(ft)	Top	Bottom	Top	Bottom	Casing	Hole	Top	Bottom	Top	Bottom	Casing	Hole		
W-14A	1/22/2008-1/30/2008	Arcadis	115.23	114.71	9	2	0 02	45	67	112	67	112	112	200	48	3	48	3	3	-85	MSH	ARCADIS (2008)
W-14B			115.00*	114.78	9	2	0 02	10	157	167	157	167	167	200	-42	-52	-42	-52	-52	-85		
W-14C			115.00*	114.78	9	2	0 02	10	185	195	185	195	195	200	-70	-80	-70	-80	-80	-85		
W-15A	11/27/2007-12/10/2007	Arcadis	127.91	127.59	10	2	0 02	45	78	126	80	125	125	200	50	2	48	3	3	-72	MSH	ARCADIS (2008)
W-15B			128.00*	127.61	10	2	0 02	10	143	156	145	155	155	200	-15	-28	-17	-27	-27	-72		
W-15C			128.00*	127.59	10	2	0 02	10	188	200	190	200	200	200	-60	-72	-62	-72	-72	-72		
W-16A	10/24/2007-10/30/2007	Arcadis	147.89	147.60	10	2	0 02	45	76	125	78	123	123	200	72	23	70	25	25	-52	Walker	ARCADIS (2008)
W-16B			148.00*	147.68	10	2	0 02	10	143	156	152	162	162	200	5	-8	-4	-14	-14	-52		
W-16C			148.00*	147.67	10	2	0 02	10	184	200	186	196	196	200	-36	-52	-38	-48	-48	-52		
W-17A	1/31/2008-2/8/2008	Arcadis	141.60	141.38	9	2	0 02	45	63	108	63	108	108	200	78	33	78	33	33	-59	Refinery	ARCADIS (2008)
W-17B			142.00*	141.37	9	2	0 02	10	159	169	159	169	169	200	-18	-28	-18	-28	-28	-59		
W-17C			142.00*	141.38	9	2	0 02	10	190	200	190	200	200	200	-49	-59	-49	-59	-59	-59		
MW-701	12/6/2010	Murex	136.87	139.48	12	4	0 02	50	77	130	80	130	130	130	59.87	6 87	56.87	6.87	6.87	6.87	Refinery	Murex (2011)
MW-702	12/15/2010	Murex	140.90	140.12	12	4	0 02	50	77	130	80	130	130	130	63.90	10.90	60.90	10.90	10.90	10.90	Refinery	Murex (2011)
MW-703	12/10/2010	Murex	134.73	137.23	12	4	0 02	50	77	130	80	130	130	130	57.73	4.73	54.73	4.73	4.73	4.73	Refinery	Murex (2011)
MW-704	12/14/2010	Murex	137.93	137.66	12	4	0 02	50	77	130	80	130	130	130	60.93	7 93	57.93	7.93	7.93	7.93	Refinery	Murex (2011)
MW-705	12/13/2010	Murex	139.16	141.94	12	4	0 02	50	77	130	80	130	130	130	62.16	9.16	59.16	9.16	9.16	9.16	Refinery	Murex (2011)
MW-706	12/9/2010	Murex	139.68	139.30	12	4	0 02	50	77	130	80	130	130	130	62.68	9.68	59.68	9.68	9.68	9.68	Refinery	Murex (2011)
MW-707	12/23/2010	Murex	128.86	128.43	12	4	0 02	50	77	130	80	130	130	130	51.86	-1.14	48.86	-1.14	-1.14	-1.14	Getty Drive	Murex (2011)
MW-708	1/12/2011	Murex	126.73	126.26	12	4	0 02	50	77	130	80	130	130	130	49.73	-3 27	46.73	-3.27	-3.27	-3.27	MSH	Murex (2011)
MW-709	1/26/2011	Murex	140.48	139.78	12	4	0 02	50	77	130	80	130	130	130	63.48	10.48	60.48	10.48	10.48	10.48	MSH	Murex (2011)
MW-710	1/13/2011	Murex	122.15	121.99	12	4	0 02	50	77	130	80	130	130	130	45.15	-7 85	42.15	-7.85	-7.85	-7.85	MSH	Murex (2011)
MW-711	1/17/2011	Murex	128.09	127.84	12	4	0 02	50	77	130	80	130	130	130	51.09	-1 91	48.09	-1.91	-1.91	-1.91	MSH	Murex (2011)
MW-712	1/24/2011	Murex	123.57	123.31	12	4	0 02	50	77	130	80	130	130	130	46.57	-6.43	43.57	-6.43	-6.43	-6.43	MSH	Murex (2011)
MW-713	1/19/2011	Murex	128.42	128.15	12	4	0 02	50	77	130	80	130	130	130	51.42	-1 58	48.42	-1.58	-1.58	-1.58	MSH	Murex (2011)
MW-714	1/20/2011	Murex	129.07	128.87	12	4	0 02	50	77	130	80	130	130	130	52.07	-0 93	49.07	-0.93	-0.93	-0.93	MSH	Murex (2011)
MW-715	1/27/2011	Murex	116.66	116.22	12	4	0 02	50	77	130	80	130	130	130	39.66	-13 34	36.66	-13.34	-13.34	-13.34	MSH	Murex (2011)
Groundwater Production Wells																						
					-	-	-	80	-	-	450	530	690	-	-	-	-	-	-	-	Refinery	IT (1986)
W-7	-		-	141.97	-	-	-	90	-	-	600	690	-	-	-	-	-	-	-	-	Refinery	
W-8	-		-	141.11	-	-	-	-	-	-	-	-	994	-	-	-	-	-	-	-	Refinery	

NOTES:

Sources: IT, 1986; Versar, 2000; Arcadis, 2003, 2006, 2008, and 2009; Dan Herlihy Environmental Services, 2006 (as shown).

[1]Survey by BLC Surveying and BBL, Inc. Benchmark No. 13-15290 City of Los Angeles

[2]Well abandoned

ft	Feet
in	Inches
MSH	Metropolitan State Hospital Property
amsl	Above mean sea level
TA	Test America Drilling
TOC	Top of casing
*	Value retrieved from Google Earth

Table II
Summary of Groundwater Level Measurements
Former CENCO Refinery
Santa Fe Springs, CA
First Quarter 2011

Well ID	Date	Total Depth (ft)	Depth to Groundwater (ft)	Depth To FPPH (ft)	FPPH Thickness (ft)	Top of Casing Elevation (ft amsl)	Groundwater Elevation (ft amsl)
EW-1	1/28/2011	113.00	105.98	105.54	0.44	144.78	39.15
W-1	1/28/2011	129.61	111.71		0.00	144.81	33.10
W-3A	1/28/2011	111.73	DRY		0.00	136.79	NA
W-4	1/28/2011	129.71	114.24		0.00	142.56	28.32
W-7	1/28/2011	NM	96.11		0.00	141.97	NA
W-8	1/28/2011	NM	79.00		0.00	141.11	NA
W-9	1/28/2011	110.37	94.47		0.00	139.84	45.37
W-10	1/28/2011	110.21	104.41		0.00	140.71	36.30
W-11	2/2/2011	112.61	108.66	108.08	0.58	142.10	33.90
W-12	1/28/2011	116.10	109.55		0.00	145.15	35.60
W-14 A	1/28/2011	111.85	99.27		0.00	114.71	15.44
W-14 B	1/28/2011	112.09	96.94		0.00	114.78	17.84
W-14 C	1/28/2011	166.57	97.15		0.00	114.78	17.63
W-15 A	1/28/2011	125.70	116.27		0.00	127.59	11.32
W-15 B	1/28/2011	155.60	116.11		0.00	127.61	11.50
W-15 C	1/28/2011	197.34	115.71		0.00	127.59	11.88
W-16 A	1/28/2011	123.12	114.43		0.00	147.60	33.17
W-16 B	1/28/2011	160.25	118.59		0.00	147.68	29.09
W-16 C	1/28/2011	196.30	118.73		0.00	147.67	28.94
W-17 A	1/28/2011	108.30	103.26		0.00	141.38	38.12
W-17 B	1/28/2011	169.60	106.96		0.00	141.37	34.41
W-17 C	1/28/2011	200.00	106.97		0.00	141.38	34.41
MW-101	1/28/2011	90.72	DRY		0.00	138.00	NA
MW-103	1/28/2011	94.70	DRY		0.00	139.36	NA
MW-104A	1/28/2011	100.08	93.70		0.00	144.13	50.43
MW-105	1/28/2011	100.47	DRY		0.00	141.16	NA
MW-106A	1/28/2011	110.00	107.15		0.00	152.81	45.66
MW-107A	1/28/2011	109.49	104.32		0.00	147.02	42.70
MW-201	1/28/2011	101.60	DRY		0.00	135.65	NA
MW-202	1/28/2011	92.55	DRY		0.00	140.62	NA
MW-203	1/28/2011	102.30	DRY		0.00	143.71	NA
MW-204	1/28/2011	103.10	DRY		0.00	142.90	NA
MW-205	1/28/2011	98.27	DRY		0.00	140.09	NA
MW-501A	1/28/2011	93.27	DRY		0.00	130.89	NA
MW-502	1/28/2011	100.59	DRY		0.00	131.00	NA
MW-503B	2/4/2011	108.67	107.63	107.00	0.63	132.66	25.53
MW-504	1/28/2011	95.76	DRY		0.00	137.18	NA
MW-600A	1/28/2011	92.70	DRY		0.00	124.26	NA
MW-601A	1/28/2011	89.90	NM		0.00	126.53	NA
MW-603	1/28/2011	97.60	DRY		0.00	120.95	NA
MW-604	1/28/2011	103.20	DRY		0.00	140.07	NA
MW-605	1/28/2011	93.98	DRY		0.00	116.82	NA
MW-606	1/28/2011	99.05	DRY		0.00	116.06	NA
MW-607	1/28/2011	107.05	DRY		0.00	128.28	NA
MW-701	1/27/2011	130.00	106.01		0.00	139.48	33.47
MW-702	1/27/2011	130.00	105.95		0.00	140.12	34.17
MW-703	1/27/2011	130.00	107.44		0.00	137.23	29.79
MW-704	2/9/2011	130.00	109.07		0.00	137.66	28.59
MW-705	1/25/2011	130.00	109.82		0.00	141.94	32.12
MW-706	1/24/2011	130.00	106.22		0.00	139.30	33.08

Table II
Summary of Groundwater Level Measurements
Former CENCO Refinery
Santa Fe Springs, CA
First Quarter 2011

Well ID	Date	Total Depth	Depth to Groundwater	Depth To FPPH	FPPH Thickness	Top of Casing Elevation	Groundwater Elevation
MW-707	1/28/2011	130.00	103.75		0.00	128.43	24.68
MW-708	2/2/2011	130.00	102.85	102.72	0.13	126.26	23.51
MW-709	2/1/2011	130.00	112.56		0.00	139.78	27.22
MW-710	2/8/2011	130.00	100.65		0.00	121.99	21.34
MW-711	2/8/2011	130.00	107.79		0.00	127.84	20.05
MW-712	2/9/2011	130.00	105.00		0.00	123.31	18.31
MW-713	2/9/2011	130.00	110.49		0.00	128.15	17.66
MW-714	2/14/2011	142.00	110.25		0.00	128.87	18.62
MW-715	2/14/2011	134.00	102.55		0.00	116.22	13.67

NOTES:

ft	Feet
FPPH	Free-phase petroleum hydrocarbon
amsl	Above mean sea level
NM	Not measured, inaccessible
NA	Not available/applicable

Table III
Summary of Total Petroleum Hydrocarbon (TPH) and Emergent Chemical Results
Former CENCO Refinery
Santa Fe Springs, CA

Well ID	Date	TPH-g (ug/L)	TPH-d (ug/L)	HEX CHROME (ug/L)	1,4-Dioxane (ug/L)	1,2,3-TCP (ug/L)
EW-1	11/1/1989	9,800	-	-	-	-
	8/21/1998	5,000	-	-	-	-
	1/28/1999	7,900	-	-	-	-
	7/19/1999	8,000	-	-	-	-
	1/13/2000	NS	NS	-	-	-
	7/31/2000	NS	NS	-	-	-
	2/6/2001	NS	NS	-	-	-
	7/26/2001	NS	NS	-	-	-
	5/6/2002	NS	NS	-	-	-
	9/25/2002	NS	NS	-	-	-
	11/10/2006	4,800	-	<2	-	<20
	2/9/2007	4,100	-	<2	<0.49	<10
	5/10/2007	3,300	-	<2	-	<20
	8/10/2007	3,200	-	<2	-	<10
	2/8/2008	4,100	-	<2	-	<20
	2/3/2011	4,500 [4,200]	-	-	-	<1.0
MW-101	12/13/1995	2,400	-	-	-	-
	7/31/1996	2,300	-	-	-	-
	12/17/1996	920	-	-	-	-
	1/19/1998	1,400	-	-	-	-
	8/18/1998	3,200	-	-	-	-
	1/26/1999	3,200	-	-	-	-
	7/19/1999	1,300	-	-	-	-
	1/10/2000	690	-	-	-	-
	8/3/2000	<500	-	-	-	-
	2/9/2001	600	-	-	-	-
	7/26/2001	690	-	-	-	-
	5/8/2002	580	-	-	-	-
MW-101	9/25/2002	570	-	-	-	-
	8/3/2006	2,700	-	<2	-	<10
	11/10/2006	1,900	-	<2	-	<10
	2/12/2007	2,100	-	<2	2	<40
	5/11/2007	1,100	-	<2	-	<10
	8/8/2007	2,600	-	<2	-	<10
	11/8/2007	830	-	<0.2	-	<0.4
MW-103	12/13/1995	4,100	-	-	-	-
	7/31/1996	2,700	-	-	-	-
	12/17/1996	2,400	-	-	-	-
	1/21/1998	1,300	-	-	-	-
	8/19/1998	1,600	-	-	-	-
	1/27/1999	1,900	-	-	-	-
	7/19/1999	1,800	-	-	-	-

Table III
Summary of Total Petroleum Hydrocarbon (TPH) and Emergent Chemical Results
Former CENCO Refinery
Santa Fe Springs, CA

Well ID	Date	TPH-g (ug/L)	TPH-d (ug/L)	HEX CHROME (ug/L)	1,4-Dioxane (ug/L)	1,2,3-TCP (ug/L)
MW-103	1/12/2000	1,500	-	-	-	-
	8/4/2000	520	-	-	-	-
	2/9/2001	650	-	-	-	-
	7/25/2001	1,300	-	-	-	-
	5/8/2002	200	-	-	-	-
	9/25/2002	690	-	-	-	-
	8/3/2006	350	-	<2	-	<10
	11/8/2006	430	-	<2	-	<10
	2/8/2007	360	-	<2	2	<10
	5/9/2007	220	-	<2	-	<10
	8/8/2007	370	-	<2	-	<10
	11/6/2007	880	-	<0.2	-	<0.4
MW-104	12/13/1995	<500	-	-	-	-
	7/31/1996	<100	-	-	-	-
	12/16/1996	310	-	-	-	-
	1/20/1998	<100	-	-	-	-
	8/18/1998	<100	-	-	-	-
	1/27/1999	<100	-	-	-	-
MW-104A	7/19/1999	<500	-	-	-	-
	1/13/2000	<500	-	-	-	-
	8/2/2000	<500	-	-	-	-
	2/7/2001	<500	-	-	-	-
	7/25/2001	<100	-	-	-	-
	5/7/2002	100	-	-	-	-
	9/24/2002	<100	-	-	-	-
	6/30/2004	<200	-	-	-	-
	10/7/2005	<100	-	<1	-	<5
	2/15/2006	<50	-	<0.3	-	<5
	2/7/2007	540	-	<2	1	<10
	5/8/2007	33	-	<2	-	<10
	8/8/2007	<50	-	0	-	<10
	11/5/2007	<30	-	<0.2	-	<0.4
	2/4/2008	<50	-	<2	-	<10
	1/16/2009	46	-	<2	-	<10
	4/22/2009	<50	-	<2	-	<10
	3/3/2010	<50	-	<1.0	-	<1.0
	8/4/2010	<50	-	<1.0	-	<1.0
	11/3/2010	<50	-	-	-	<1.0
	2/2/2011	<50 [<50]	-	-	-	<1.0 [<1.0]
MW-105	12/21/1995	<500	-	-	-	-

Table III
Summary of Total Petroleum Hydrocarbon (TPH) and Emergent Chemical Results
Former CENCO Refinery
Santa Fe Springs, CA

Well ID	Date	TPH-g (ug/L)	TPH-d (ug/L)	HEX CHROME (ug/L)	1,4-Dioxane (ug/L)	1,2,3-TCP (ug/L)
MW-105	7/31/1996	650	-	-	-	-
	12/16/1996	240	-	-	-	-
	1/20/1998	510	-	-	-	-
	8/18/1998	680	-	-	-	-
	1/25/1999	530	-	-	-	-
	7/19/1999	610	-	-	-	-
	1/10/2000	900	-	-	-	-
	7/31/2000	580	-	-	-	-
	2/6/2001	610	-	-	-	-
	7/24/2001	210	-	-	-	-
	5/7/2002	530	-	-	-	-
	9/24/2002	<100	-	-	-	-
	6/30/2004	270	-	-	-	-
	10/6/2005	320	-	<1	-	<5
	2/15/2006	205	-	<0.3	-	<5
	8/1/2006	330	-	<2	-	<10
	11/8/2006	230	-	<2	-	<10
	2/7/2007	160	-	<2	2	<10
	5/9/2007	190	-	<2	-	<10
	8/7/2007	250	-	<2	-	<10
	11/5/2007	180	-	<0.2	-	<0.4
	2/5/2008	190	-	<2	-	<10
	1/15/2009	180	-	<2	-	<10
	4/22/2009	120	-	0	-	<10
MW-106	12/20/1995	790	-	-	-	-
	7/31/1996	600	-	-	-	-
	12/17/1996	360	-	-	-	-
	1/20/1998	800	-	-	-	-
	8/20/1998	1,000	-	-	-	-
	1/27/1999	1,100	-	-	-	-
	7/19/1999	890	-	-	-	-
	1/14/2000	1,000	-	-	-	-
	7/31/2000	<500	-	-	-	-
	2/6/2001	530	-	-	-	-
	7/24/2001	470	-	-	-	-
	5/7/2002	430	-	-	-	-
	9/24/2002	120	-	-	-	-
	7/1/2004	260	-	-	-	-
MW-106A	8/2/2006	310	-	<2	-	<10
	11/9/2006	82	-	<2	-	<10
	2/8/2007	270	-	<2	1	<10
	5/10/2007	210	-	<2	-	<10

Table III
Summary of Total Petroleum Hydrocarbon (TPH) and Emergent Chemical Results
Former CENCO Refinery
Santa Fe Springs, CA

Well ID	Date	TPH-g (ug/L)	TPH-d (ug/L)	HEX CHROME (ug/L)	1,4-Dioxane (ug/L)	1,2,3-TCP (ug/L)
MW-106A	8/9/2007	270	-	<2	-	<10
	11/7/2007	240	-	<0.2	-	<0.4
	2/5/2008	220	-	<2	-	<10
	1/19/2009	220	-	<2	-	<10
	4/23/2009	290	-	<2	-	<10
	3/5/2010	590	-	<1.00	-	<1.0
	5/13/2010	460	-	<1.00	-	<1.0
	8/6/2010	450	-	<1.00	-	<1.0
	11/4/2010	630	-	-	-	<1.0
	2/3/2011	570	-	-	-	<1.0
MW-107	12/21/1995	<500	-	-	-	-
	7/31/1996	600	-	-	-	-
	12/17/1996	380	-	-	-	-
	1/20/1998	830	-	-	-	-
	8/20/1998	830	-	-	-	-
	1/27/1999	1,100	-	-	-	-
	7/19/1999	820	-	-	-	-
	1/12/2000	1,700	-	-	-	-
	7/31/2000	1,700	-	-	-	-
	2/6/2001	2,100	-	-	-	-
	7/26/2001	2,000	-	-	-	-
	5/9/2002	2,100	-	-	-	-
	9/25/2002	2,200	-	-	-	-
MW-107A	8/2/2006	770	-	<2	-	<10
	11/9/2006	780	-	<2	-	<10
	2/8/2007	500	-	<2	<0.48	<10
	5/10/2007	670	-	<2	-	<10
	8/9/2007	1,000	-	<2	-	<10
	11/7/2007	1,500	-	<0.2	-	<0.4
	2/5/2008	2,800	-	<2	-	<10
	1/19/2009	1,200	-	<2	-	<10
	4/23/2009	2,400	-	<2	-	<10
	3/5/2010	1,300	-	<1.0	-	<1.0
	5/13/2010	1,500	-	<1.0	-	<1.0
	8/6/2010	1,300	-	<1.0	-	<1.0
	11/4/2010	1400 [1600]	-	-	-	<1.0
	2/3/2011	740	-	-	-	<1.0
MW-201	12/13/1995	9,000	-	-	-	-
	7/31/1996	<100	-	-	-	-
	12/17/1996	3,700	-	-	-	-
	1/21/1998	2,600	-	-	-	-

Table III
Summary of Total Petroleum Hydrocarbon (TPH) and Emergent Chemical Results
Former CENCO Refinery
Santa Fe Springs, CA

Well ID	Date	TPH-g (ug/L)	TPH-d (ug/L)	HEX CHROME (ug/L)	1,4-Dioxane (ug/L)	1,2,3-TCP (ug/L)
MW-201	8/18/1998	2,600	-	-	-	-
	7/19/1999	2,800	-	-	-	-
	1/12/2000	5,100	-	-	-	-
	8/4/2000	2,900	-	-	-	-
	2/9/2001	2,200	-	-	-	-
	7/26/2001	3,200	-	-	-	-
	5/9/2002	1,800	-	-	-	-
	9/26/2002	890	-	-	-	-
	6/30/2004	1,700	-	-	-	-
	10/7/2005	3,400	-	<1	-	<25
	2/15/2006	1,890	-	<0.3	-	<5
	8/2/2006	1,000	-	<2	-	<10
	11/9/2006	1,100	-	<2	-	<10
	2/7/2007	1,100	-	<2	1	<10
	5/9/2007	830	-	<2	-	<10
	8/8/2007	1,300	-	<2	-	<10
	11/6/2007	1,500	-	<0.2	-	<0.4
	2/7/2008	670	-	<2	-	<10
	1/20/2009	1,400	-	<2	-	<10
	4/28/2009	510	-	<2	-	<10
MW-202	12/1/1995	6,500	-	-	-	-
	7/31/1996	4,800	-	-	-	-
	12/17/1996	7,400	-	-	-	-
	1/21/1998	1,600	-	-	-	-
	8/18/1998	3,100	-	-	-	-
	1/27/1999	2,300	-	-	-	-
	7/19/1999	2,300	-	-	-	-
	1/11/2000	2,400	-	-	-	-
	2/7/2000	1,100	-	-	-	-
	8/2/2000	1,400	-	-	-	-
	7/24/2001	1,100	-	-	-	-
	5/8/2002	1,400	-	-	-	-
	9/26/2002	1,000	-	-	-	-
MW-203	12/13/1995	640	-	-	-	-
	7/31/1996	500	-	-	-	-
	12/17/1996	160	-	-	-	-
	1/20/1998	250	-	-	-	-
	8/20/1998	290	-	-	-	-
	1/27/1999	330	-	-	-	-
	7/19/1999	<500	-	-	-	-
	1/12/2000	<500	-	-	-	-
	7/31/2000	<500	-	-	-	-

Table III
Summary of Total Petroleum Hydrocarbon (TPH) and Emergent Chemical Results
Former CENCO Refinery
Santa Fe Springs, CA

Well ID	Date	TPH-g (ug/L)	TPH-d (ug/L)	HEX CHROME (ug/L)	1,4-Dioxane (ug/L)	1,2,3-TCP (ug/L)
MW-203	2/6/2001	<500	-	-	-	-
	7/24/2001	180	-	-	-	-
	5/8/2002	150	-	-	-	-
	9/25/2002	160	-	-	-	-
	7/1/2004	270	-	-	-	-
	8/2/2006	240	-	<2	-	<10
	11/9/2006	260	-	<2	-	<10
	2/8/2007	150	-	<2	2	<10
	5/10/2007	170	-	<2	-	<10
	8/9/2007	270	-	<2	-	<10
	11/7/2007	65	-	<0.2	-	<0.4
	2/5/2008	87	-	<2	-	<10
	1/19/2009	65	-	-	-	-
	1/19/2009	65	-	<2	-	<10
	4/23/2009	69	-	<2	-	<10
MW-204	12/13/1995	12,000,000	-	-	-	-
	8/1/1996	14,000	-	-	-	-
	12/17/1996	2,100	-	-	-	-
	1/21/1998	6,000	-	-	-	-
	8/21/1998	11,000	-	-	-	-
	1/28/1999	10,000	-	-	-	-
	7/19/1999	1,900	-	-	-	-
	1/11/2000	2,100	-	-	-	-
	8/3/2000	1,300	-	-	-	-
	2/8/2001	1,200	-	-	-	-
	7/24/2001	1,200	-	-	-	-
	5/9/2002	1,400	-	-	-	-
	9/26/2002	560	-	-	-	-
	6/30/2004	260	-	-	-	-
	10/7/2005	340	-	<1	-	<5
	2/15/2006	111	-	<0.3	-	<5
	8/1/2006	260	-	<2	-	<10
	11/10/2006	81	-	<2	-	<10
	2/7/2007	360	-	<2	1	<10
	11/6/2007	53	-	<0.2	-	<0.4
	2/4/2008	37	-	<2	-	<10
	4/23/2009	110	-	<2	-	<10
MW-205	12/13/1995	2,100	-	-	-	-
	7/31/1996	<100	-	-	-	-
	12/16/1996	270	-	-	-	-
	1/20/1998	190	-	-	-	-
	8/21/1998	17	-	-	-	-

Table III
Summary of Total Petroleum Hydrocarbon (TPH) and Emergent Chemical Results
Former CENCO Refinery
Santa Fe Springs, CA

Well ID	Date	TPH-g (ug/L)	TPH-d (ug/L)	HEX CHROME (ug/L)	1,4-Dioxane (ug/L)	1,2,3-TCP (ug/L)
MW-205	1/26/1999	220	-	-	-	-
	7/19/1999	<500	-	-	-	-
	1/11/2000	790	-	-	-	-
	8/2/2000	<500	-	-	-	-
	2/7/2001	540	-	-	-	-
	7/26/2001	380	-	-	-	-
	5/8/2002	260	-	-	-	-
	9/25/2002	300	-	-	-	-
	6/30/2004	<200	-	-	-	-
	10/6/2005	850	-	<1	-	<5
	2/15/2006	411	-	<0.3	-	<5
	8/2/2006	560	-	<2	-	<10
	11/8/2006	360	-	<2	-	<10
	2/7/2007	150	-	<2	1	<10
	5/9/2007	190	-	<2	-	<10
	8/8/2007	290	-	<2	-	<10
	11/6/2007	330	-	<0.2	-	<0.4
	2/5/2008	260	-	<2	-	<10
	1/19/2009	<380	-	<2	-	<20
	4/22/2009	<320	-	<2	-	<10
MW-206	12/13/1995	12,000	-	-	-	-
	7/31/1996	33,000	-	-	-	-
	12/18/1996	8,200	-	-	-	-
	1/21/1998	13,000	-	-	-	-
	8/20/1998	NS	NS	-	-	-
MW-501	12/13/1995	69,000	-	-	-	-
	7/31/1996	18,000	-	-	-	-
	12/18/1996	6,800	-	-	-	-
	1/21/1998	950	-	-	-	-
	8/20/1998	NS	NS	-	-	-
	1/26/1999	NS	NS	-	-	-
MW-501A	7/19/1999	7,500	-	-	-	-
	1/13/2000	9,200	-	-	-	-
	8/2/2000	7,100	-	-	-	-
	2/7/2001	6,600	-	-	-	-
	7/25/2001	5,700	-	-	-	-
	5/8/2002	7,000	-	-	-	-
	9/26/2002	6,500	-	-	-	-
	8/3/2006	24,000	-	<2	-	<10
	11/10/2006	13,000	-	<2	-	<200
	2/12/2007	<13000	-	<2	13	<200

Table III
Summary of Total Petroleum Hydrocarbon (TPH) and Emergent Chemical Results
Former CENCO Refinery
Santa Fe Springs, CA

Well ID	Date	TPH-g (ug/L)	TPH-d (ug/L)	HEX CHROME (ug/L)	1,4-Dioxane (ug/L)	1,2,3-TCP (ug/L)
MW-501A	5/11/2007	9,100	-	<2	-	<500
	8/10/2007	7,100	-	<2	-	<100
	11/8/2007	7,700	-	<0.2	-	<8
MW-502	12/13/1995	220,000	-	-	-	-
	7/13/1996	110,000	-	-	-	-
	12/18/1996	30,000	-	-	-	-
	1/22/1998	24,000	-	-	-	-
	8/19/1998	86,000	-	-	-	-
	1/26/1999	120,000	-	-	-	-
	7/19/1999	48,000	-	-	-	-
	1/13/2000	25,000	-	-	-	-
	8/2/2000	23,000	-	-	-	-
	2/7/2001	18,000	-	-	-	-
	7/25/2001	24,000	-	-	-	-
	5/9/2002	25,000	-	-	-	-
	9/26/2002	11,000	-	-	-	-
	10/5/2005	15,000	-	<1	-	<500
	2/14/2006	47,600	-	<0.3	-	<50
	8/4/2006	20,000	-	<2	-	<10
	11/10/2006	35,000	-	<2	-	<200
	2/9/2007	15,000	-	<2	8	<2000
	5/11/2007	25,000	-	<2	-	<1000
	8/10/2007	<30000	-	<2	-	<500
	11/8/2007	19,000	-	<0.2	-	<80
	2/11/2008	26,000	-	<2	-	<1000
MW-503	12/13/1995	8,200	-	-	-	-
	7/31/1996	5,100	-	-	-	-
	12/18/1996	4,600	-	-	-	-
	1/21/1998	3,100	-	-	-	-
	8/19/1998	960	-	-	-	-
MW-503B	2/9/1999	10,000	-	-	-	-
	7/19/1999	7,800	-	-	-	-
	1/14/2000	14,000	-	-	-	-
	8/4/2000	5,600	-	-	-	-
	2/6/2001	5,800	-	-	-	-
	7/25/2001	5,700	-	-	-	-
	5/9/2002	4,500	-	-	-	-
	9/26/2002	3,300	-	-	-	-
	7/1/2004	5,900	-	-	-	-
	10/5/2005	5,400	-	<1	-	<100
	2/14/2006	5,450	-	<0.3	-	<50

Table III
Summary of Total Petroleum Hydrocarbon (TPH) and Emergent Chemical Results
Former CENCO Refinery
Santa Fe Springs, CA

Well ID	Date	TPH-g (ug/L)	TPH-d (ug/L)	HEX CHROME (ug/L)	1,4-Dioxane (ug/L)	1,2,3-TCP (ug/L)
MW-503B	8/4/2006	4,700	-	<2	-	22
	11/10/2006	3,500	-	<2	-	<20
	2/9/2007	1,600	-	<2	1	<10
	5/11/2007	1,800	-	<2	-	<10
	8/10/2007	1,800	-	<2	-	<10
	11/8/2007	2,400	-	<0.2	-	<1.6
	2/11/2008	2,700	-	<2	-	<40
	1/21/2009	6,200	-	<2	-	<50
	4/27/2009	4,000	-	<2	-	<10
	3/8/2010	2,800	-	<1.00	-	<1.0
	5/17/2010	2,900	-	<1.00	-	<1.0
	8/9/2010	3,700	-	<1.00	-	<1.0
	11/8/2010	8000 [12000]	-	-	-	<1.0 [<1.0]
	2/4/2011	57,000	-	-	-	<1.0
MW-504	12/13/1995	99,000	-	-	-	-
	8/1/1996	80,000	-	-	-	-
	12/18/1996	33,000	-	-	-	-
	1/21/1998	30,000	-	-	-	-
	8/20/1998	NS	NS	-	-	-
	1/28/1999	NS	NS	-	-	-
	7/19/1999	NS	NS	-	-	-
	1/10/2000	NS	NS	-	-	-
	7/31/2000	NS	NS	-	-	-
	2/6/2001	NS	NS	-	-	-
	7/24/2001	NS	NS	-	-	-
	5/6/2002	NS	NS	-	-	-
	9/23/2002	NS	NS	-	-	-
	2/16/2006	18,000	-	<0.3	-	<50
	8/3/2006	10,000	-	<2	-	<10
	11/10/2006	6,200	-	<2	-	<200
	2/9/2007	6,100	-	<2	5	<10
	5/11/2007	13,000	-	<2	-	<200
	8/10/2007	7,100	-	<2	-	<100
	11/8/2007	4,700	-	<0.2	-	<4
	2/8/2008	6,200	-	<2	-	<100
MW-600	8/1/1990	380,000	-	-	-	-
	2/20/1991	50	-	-	-	-
	12/13/1995	3,500,000	-	-	-	-
	8/1/1996	210,000	-	-	-	-
	12/19/1996	87,000	-	-	-	-
	1/22/1998	NS	NS	-	-	-
	8/20/1998	NS	NS	-	-	-

Table III
Summary of Total Petroleum Hydrocarbon (TPH) and Emergent Chemical Results
Former CENCO Refinery
Santa Fe Springs, CA

Well ID	Date	TPH-g (ug/L)	TPH-d (ug/L)	HEX CHROME (ug/L)	1,4-Dioxane (ug/L)	1,2,3-TCP (ug/L)
MW-600	1/28/1999	NS	NS	-	-	-
MW-600A	7/19/1999	NS	NS	-	-	-
	1/10/2000	NS	NS	-	-	-
	7/31/2000	NS	NS	-	-	-
	2/6/2001	NS	NS	-	-	-
	7/24/2001	NS	NS	-	-	-
	5/6/2002	NS	NS	-	-	-
	9/23/2002	NS	NS	-	-	-
MW-601	8/1/1990	360,000	-	-	-	-
	2/20/1991	24	-	-	-	-
	12/13/1995	3,500,000	-	-	-	-
	8/1/1996	250,000	-	-	-	-
	12/19/1996	70,000	-	-	-	-
	1/22/1998	NS	NS	-	-	-
	8/20/1998	NS	NS	-	-	-
	1/28/1999	NS	NS	-	-	-
MW-601A	7/19/1999	42,000	-	-	-	-
	1/13/2000	48,000	-	-	-	-
	8/3/2000	34,000	-	-	-	-
	2/7/2001	35,000	-	-	-	-
	7/24/2001	31,000	-	-	-	-
	5/9/2002	28,000	-	-	-	-
	9/26/2002	11,000	-	-	-	-
MW-603	12/1/1995	<500	-	-	-	-
	7/30/1996	<100	-	-	-	-
	12/16/1996	<100	-	-	-	-
	1/22/1998	<100	-	-	-	-
	8/19/1998	<100	-	-	-	-
	1/27/1999	<100	-	-	-	-
	7/19/1999	<500	-	-	-	-
	1/11/2000	<500	-	-	-	-
	7/31/2000	<500	-	-	-	-
	2/7/2001	<500	-	-	-	-
	7/24/2001	190	-	-	-	-
	5/7/2002	210	-	-	-	-
	9/24/2002	<100	-	-	-	-
	7/1/2004	<200	-	-	-	-
	10/6/2005	150	-	<1	-	<5
	2/14/2006	245	-	<0.3	-	<5
	8/1/2006	190	-	<2	-	<10

Table III
Summary of Total Petroleum Hydrocarbon (TPH) and Emergent Chemical Results
Former CENCO Refinery
Santa Fe Springs, CA

Well ID	Date	TPH-g (ug/L)	TPH-d (ug/L)	HEX CHROME (ug/L)	1,4-Dioxane (ug/L)	1,2,3-TCP (ug/L)
MW-603	11/7/2006	150	-	<2	-	<10
	2/6/2007	120	-	<2	6	<10
	8/7/2007	<110	-	<2	-	<10
	11/5/2007	120	-	<0.2	-	<0.4
	2/4/2008	120	-	<2	-	<10
	1/13/2009	75	-	<2	-	<10
	4/21/2009	59	-	<2	-	<10
MW-604	12/20/1995	1,900	-	-	-	-
	7/30/1996	900	-	-	-	-
	12/17/1996	710	-	-	-	-
	1/22/1998	410	-	-	-	-
	8/19/1998	370	-	-	-	-
	1/27/1999	230	-	-	-	-
	7/19/1999	500	-	-	-	-
	1/11/2000	750	-	-	-	-
	8/3/2000	560	-	-	-	-
	2/7/2001	1,100	-	-	-	-
	7/24/2001	1,100	-	-	-	-
	5/8/2002	1,400	-	-	-	-
	9/25/2002	970	-	-	-	-
	11/8/2006	330	-	<2	-	<10
	2/7/2007	540	-	<2	<0.49	<10
	5/8/2007	480	-	<2	-	<10
	8/7/2007	290	-	<2	-	<10
	11/5/2007	500	-	<0.2	-	<0.4
MW-605	12/20/1995	<1000	-	-	-	-
	7/31/1996	<100	-	-	-	-
	12/16/1996	<100	-	-	-	-
	1/22/1998	<100	-	-	-	-
	8/19/1998	<100	-	-	-	-
	1/28/1999	<100	-	-	-	-
	7/19/1999	<500	-	-	-	-
	1/11/2000	<600	-	-	-	-
	8/2/2000	<700	-	-	-	-
	2/7/2001	<800	-	-	-	-
	7/24/2001	<100	-	-	-	-
	5/7/2002	<200	-	-	-	-
	9/24/2002	<300	-	-	-	-
	6/30/2004	<200	-	-	-	-
	10/5/2005	<100	-	<1	-	<5
	2/14/2006	53	-	0	-	<5
	8/1/2006	<50	-	<2	-	<10

Table III
Summary of Total Petroleum Hydrocarbon (TPH) and Emergent Chemical Results
Former CENCO Refinery
Santa Fe Springs, CA

Well ID	Date	TPH-g (ug/L)	TPH-d (ug/L)	HEX CHROME (ug/L)	1,4-Dioxane (ug/L)	1,2,3-TCP (ug/L)
	11/7/2006	<50	-	<2	-	<10
	2/6/2007	<50	-	<2	2	<10
	5/8/2007	38	-	<2	-	<10
	8/7/2007	30	-	<2	-	<10
	11/5/2007	<30	-	<0.2	-	<0.4
MW-605	2/4/2008	<50	-	<2	-	<10
MW-606	12/19/1995	<500	-	-	-	-
	7/31/1996	<100	-	-	-	-
	12/16/1996	<100	-	-	-	-
	1/22/1998	<100	-	-	-	-
	8/19/1998	170	-	-	-	-
	1/28/1999	<100	-	-	-	-
	7/19/1999	<500	-	-	-	-
	1/11/2000	<500	-	-	-	-
	8/2/2000	<500	-	-	-	-
	2/7/2001	<500	-	-	-	-
	7/24/2001	<100	-	-	-	-
	5/7/2002	<100	<100	-	-	-
	9/24/2002	<100	<100	-	-	-
	6/30/2004	<200	-	-	-	-
	10/5/2005	240	-	2	-	<5
	2/14/2006	<50	-	4	-	<5
	8/1/2006	<50	-	3	-	<10
	11/7/2006	<50	-	3	-	<10
	2/6/2007	<50	-	4	<0.48	<7
	5/8/2007	<50	-	4	-	<10
	8/7/2007	<50	-	2	-	<10
	11/5/2007	<30	-	1	-	<0.4
	2/4/2008	<50	-	0	-	<10
	1/13/2009	<50	-	<2	-	<10
	4/21/2009	<50	-	<2	-	<10
MW-607	12/19/1995	1,200	-	-	-	-
	7/31/1996	900	-	-	-	-
	12/17/1996	1,000	-	-	-	-
	1/22/1998	1,200	-	-	-	-
	8/19/1998	260	-	-	-	-
	1/27/1999	1,760	-	-	-	-
	7/19/1999	1,200	-	-	-	-
	1/11/2000	1,200	-	-	-	-
	7/31/2000	540	-	-	-	-
	2/7/2001	50	-	-	-	-
	7/24/2001	590	-	-	-	-

Table III
Summary of Total Petroleum Hydrocarbon (TPH) and Emergent Chemical Results
Former CENCO Refinery
Santa Fe Springs, CA

Well ID	Date	TPH-g (ug/L)	TPH-d (ug/L)	HEX CHROME (ug/L)	1,4-Dioxane (ug/L)	1,2,3-TCP (ug/L)
MW-607	5/7/2002	490	-	-	-	-
	9/24/2002	110	-	-	-	-
	6/30/2004	540	-	-	-	-
	10/5/2005	760	-	<1	-	<5
	2/14/2006	373	-	<0.3	-	<5
	8/1/2006	350	-	<2	-	<10
	11/7/2006	210	-	<2	-	<10
	2/6/2007	590	-	<2	3	<10
	5/8/2007	330	-	<2	-	<10
	8/7/2007	320	-	<2	-	<10
	11/5/2007	440	-	<0.2	-	<0.4
	2/4/2008	790	-	<2	-	<10
W-1	11/1/1989	-	<1000	-	-	-
	12/18/1996	800	-	-	-	-
	1/14/1998	1,100	-	-	-	-
	8/20/1998	1,200	-	-	-	-
	1/29/1999	1,400	-	-	-	-
	7/19/1999	1,500	-	-	-	-
	8/3/2000	880	-	-	-	-
	2/8/2001	<500	-	-	-	-
	7/26/2001	620	-	-	-	-
	5/8/2002	280	-	-	-	-
	9/25/2002	210	-	-	-	-
	7/1/2004	460	-	-	-	-
	10/6/2005	310	-	<1	-	<5
	2/15/2006	266	-	<0.3	-	<5
	8/3/2006	1,100	-	<2	-	<10
	11/9/2006	470	-	<2	-	<10
	2/8/2007	500	-	<2	1	<10
	5/10/2007	890	-	<2	-	<10
	8/9/2007	1,100	-	<2	-	<10
	11/7/2007	1,200	-	<0.2	-	<0.4
	2/7/2008	1,000	-	<2	-	<10
	1/20/2009	230	-	<2	-	<10
	4/24/2009	180	-	<2	-	<10
	3/5/2010	270	-	<1.0	-	<1.0
	5/13/2010	260	-	<1.0	-	<1.0
	8/6/2010	260	-	<1.0	-	<1.0
	11/5/2010	150	-	-	-	<1.0
	2/4/2011	200	-	-	-	<1.0
W-2	11/1/1989	-	<1000	-	-	-
	12/18/1996	560	-	-	-	-

Table III
Summary of Total Petroleum Hydrocarbon (TPH) and Emergent Chemical Results
Former CENCO Refinery
Santa Fe Springs, CA

Well ID	Date	TPH-g (ug/L)	TPH-d (ug/L)	HEX CHROME (ug/L)	1,4-Dioxane (ug/L)	1,2,3-TCP (ug/L)
W-2	1/14/1998	700	-	-	-	-
	8/20/1998	NS	NS	-	-	-
W-3	11/1/1989	-	<1000	-	-	-
	12/18/1996	1,300	-	-	-	-
	1/13/1998	2,200	-	-	-	-
	8/20/1998	NS	NS	-	-	-
W-3A	1/13/1998	4,300,000	-	-	-	-
	8/20/1998	1,100	-	-	-	-
	1/28/1999	690	-	-	-	-
	7/19/1999	5,400	-	-	-	-
	1/13/2000	14,000	-	-	-	-
	8/4/2000	3,400	-	-	-	-
	2/8/2001	2,700	-	-	-	-
	7/26/2001	3,400	-	-	-	-
	5/6/2002	NS	NS	-	-	-
	9/25/2002	NS	NS	-	-	-
	2/16/2006	306	-	<0.3	-	<5
	8/3/2006	39,000	-	<2	-	<10
	11/9/2006	8,100	-	<2	-	<10
	2/8/2007	1,400	-	<2	2	<10
	5/10/2007	14,000	-	<2	-	<10
	8/9/2007	1,900	-	<2	-	<10
	11/7/2007	1,500	-	<0.2	-	<0.4
	2/7/2008	180	-	<2	-	<10
W-4	12/18/1996	420	-	-	-	-
	1/14/1998	920	-	-	-	-
	8/20/1998	500	-	-	-	-
	1/29/1999	460	-	-	-	-
	7/19/1999	710	-	-	-	-
	1/13/2000	660	-	-	-	-
	8/3/2000	<500	-	-	-	-
	2/8/2001	<500	-	-	-	-
	7/26/2001	320	-	-	-	-
	5/8/2002	250	-	-	-	-
	9/25/2002	290	-	-	-	-
	7/1/2004	350	-	-	-	-
	10/6/2005	350	-	<1	-	<5
	2/15/2006	501	-	<0.3	-	<5
	8/3/2006	2,800	-	<2	-	<10
	11/9/2006	230	-	<2	-	<10
	2/8/2007	200	-	<2	2	<10

Table III
Summary of Total Petroleum Hydrocarbon (TPH) and Emergent Chemical Results
Former CENCO Refinery
Santa Fe Springs, CA

Well ID	Date	TPH-g (ug/L)	TPH-d (ug/L)	HEX CHROME (ug/L)	1,4-Dioxane (ug/L)	1,2,3-TCP (ug/L)
W-4	5/10/2007	170	-	<2	-	<10
	8/9/2007	280	-	<2	-	<10
	11/7/2007	180	-	<0.2	-	<0.4
	2/7/2008	250	-	<2	-	<10
	1/19/2009	140	-	<2	-	<10
	4/27/2009	92	-	<2	-	<10
	3/5/2010	600	-	<1.0	-	<1.0
	5/13/2010	700	-	<1.0	-	<1.0
	8/6/2010	570	-	<1.0	-	<1.0
	11/4/2010	980	-	-	-	<1.0
	2/8/2011	1,800	-	-	-	<1.0
W-7	8/4/2000	<500	-	-	-	-
	2/8/2001	<500	-	-	-	-
	7/26/2001	<100	-	-	-	-
	5/7/2002	<100	-	-	-	-
	9/24/2002	<100	-	-	-	-
	10/7/2005	<100	-	<1	-	<5
	2/16/2006	61	-	<0.3	-	<5
	8/4/2006	<50	-	<2	-	<10
	11/10/2006	<50	-	<2	-	<10
	2/9/2007	<50	-	<2	<0.48	<10
	5/8/2007	31	-	<2	-	<10
	8/10/2007	<50	-	<2	-	<10
	11/6/2007	<30	-	<0.2	-	<0.4
	2/4/2008	<50	-	<2	-	<10
	1/13/2009	<50	-	<2	-	<10
	4/21/2009	<50	-	1	-	<10
	3/4/2010	65	-	<1.0	-	<1.0
	5/17/2010	60	-	<1.0	-	<1.0
	8/4/2010	<50	-	<1.0	-	<1.0
	11/3/2010	<50	-	-	-	<1.0
	2/2/2011	<50	-	-	-	<1.0
W-8	8/4/2000	<500	-	-	-	-
	2/6/2001	-	-	-	-	-
	7/26/2001	180	-	-	-	-
	5/7/2002	180	-	-	-	-
	9/24/2002	<100	-	-	-	-
	7/1/2004	390	-	-	-	-
	10/6/2005	220	-	<1	-	<5
	2/16/2006	192	-	<0.3	-	<5
	8/4/2006	130	-	<2	-	<10
	11/10/2006	210	-	<2	-	<10

Table III
Summary of Total Petroleum Hydrocarbon (TPH) and Emergent Chemical Results
Former CENCO Refinery
Santa Fe Springs, CA

Well ID	Date	TPH-g (ug/L)	TPH-d (ug/L)	HEX CHROME (ug/L)	1,4-Dioxane (ug/L)	1,2,3-TCP (ug/L)
W-8	2/9/2007	130	-	<2	<0.51	<10
	5/8/2007	110	-	<2	-	<10
	8/7/2007	170	-	<2	-	<10
	11/6/2007	160	-	<0.2	-	<0.4
	2/4/2008	160	-	<2	-	<10
	1/13/2009	120	-	<2	-	<10
	4/21/2009	150	-	0	-	<10
	3/4/2010	220	-	<1.0	-	<1.0
	5/17/2010	210	-	<1.0	-	<1.0
	8/4/2010	110	-	<1.0	-	<1.0
	11/4/2010	140	-	-	-	<1.0
	2/7/2011	130	-	-	-	<1.0
W-9	11/7/2006	<50	-	<2	-	<10
	2/6/2007	67	-	<2	1	<10
	5/9/2007	50	-	<2	-	<10
	8/7/2007	38	-	<2	-	<10
	11/6/2007	<30	-	<0.2	-	<0.4
	2/5/2008	<50	-	<2	-	<10
	1/15/2009	46	-	<2	-	<10
	4/23/2009	36	-	<2	-	<10
	3/3/2010	<50	-	<1.0	-	<1.0
	5/12/2010	80	-	<1.0	-	<1.0
	8/4/2010	67	-	<1.0	-	<1.0
	11/3/2010	87	-	-	-	<1.0
	2/2/2011	<50	-	-	-	<1.0
W-10	11/8/2006	26,000	-	<2	-	<200
	2/9/2007	28,000	-	<2	8	<1000
	5/11/2007	7,900	-	<2	-	<50
	8/9/2007	5,400	-	<2	-	<50
	11/9/2007	<12000	-	<0.2	-	<40
	2/8/2008	<28000	-	<2	-	<1000
	1/21/2009	20,000	-	<2	-	<1000
	4/27/2009	16,000	-	<2	-	<1000
	3/8/2010	8,600	-	<1.0	-	<500
	5/17/2010	9,500	-	<1.0	-	<1.0
	8/9/2010	7,900	-	<1.0	-	<1.0
	11/8/2010	7,700	-	<1.0	-	<1.0
	2/8/2011	11,000	-	-	-	<1.0
W-11	11/9/2006	5,200	-	<2	-	<10
	2/9/2007	8,000	-	<2	1	<20
	5/9/2007	540	-	<2	-	<10

Table III
Summary of Total Petroleum Hydrocarbon (TPH) and Emergent Chemical Results
Former CENCO Refinery
Santa Fe Springs, CA

Well ID	Date	TPH-g (ug/L)	TPH-d (ug/L)	HEX CHROME (ug/L)	1,4-Dioxane (ug/L)	1,2,3-TCP (ug/L)
W-11	8/8/2007	<1100	-	<2	-	<10
	11/8/2007	460	-	<0.2	-	<0.4
	12/8/2010	77,000	-	-	-	<1.0
	2/4/2011	10,000		-	-	<1.0
W-12	11/8/2006	1,400	-	<2	-	<10
	2/7/2007	4,800	-	<2	1	<10
	5/9/2007	220	-	<2	-	<10
	8/8/2007	1,100	-	<2	-	<10
	11/6/2007	1,500	-	<0.2	-	<0.4
	2/8/2008	410	-	<2	-	<10
	1/20/2009	620	-	<2	-	<10
	4/22/2009	1,100	-	1	-	<10
	3/4/2010	400	-	<1.0	-	<1.0
	5/12/2010	610	-	<1.0	-	<1.0
	8/5/2010	650	-	<1.0	-	<1.0
	11/4/2010	530	-	-	-	<1.0
	2/3/2011	310	-	-	-	<1.0
W-14A	2/12/2008	42	-	<2	-	<10
	1/13/2009	<50	-	<2	-	<10
	4/21/2009	54	-	<2	-	<10
	3/1/2010	<50	-	<1.0	-	<1.0
	5/10/2010	<50	-	<1.0	-	<1.0
	8/2/2010	<50	-	<1.0	-	<1.0
	11/1/2010	<50	-	-	-	<1.0
	1/31/2011	<50	-	-	-	<1.0
W-14B	2/12/2008	<50	-	<2	-	<10
	1/13/2009	170	-	<2	-	<10
	4/21/2009	65	-	1	-	<10
	3/1/2010	99	-	<1.0	-	<1.0
	5/10/2010	99	-	<1.0	-	<1.0
	8/2/2010	55	-	<1.0	-	<1.0
	11/1/2010	88	-	-	-	<1.0
	1/31/2011	65	-	-	-	<1.0
W-14C	2/12/2008	260	-	<2	-	<10
	1/14/2009	120	-	<2	-	<10
	4/21/2009	67	-	<2	-	<10
	3/1/2010	300	-	<1.0	-	<1.0
	5/10/2010	120	-	<1.0	-	<1.0
	8/2/2010	77	-	<1.0	-	<1.0
	11/1/2010	<50	-	-	-	<1.0
	1/31/2011	60	-	-	-	<1.0

Table III
Summary of Total Petroleum Hydrocarbon (TPH) and Emergent Chemical Results
Former CENCO Refinery
Santa Fe Springs, CA

Well ID	Date	TPH-g (ug/L)	TPH-d (ug/L)	HEX CHROME (ug/L)	1,4-Dioxane (ug/L)	1,2,3-TCP (ug/L)
W-15A	2/11/2008	2,700	-	<2	-	<100
	1/14/2009	230	-	<2	-	<10
	4/24/2009	530	-	<2	-	<20
	3/2/2010	240	-	<1.0	-	<1.0
	5/10/2010	260	-	<1.0	-	<1.0
	8/2/2010	310	-	<1.0	-	<1.0
	11/1/2010	61 [74]	-	-	-	<1.0 [<1.0]
	2/1/2011	14,000	-	-	-	<1.0
W-15B	2/11/2008	340	-	<2	-	<100
	1/14/2009	340	-	<2	-	<10
	4/24/2009	63	-	<2	-	<10
	3/2/2010	220	-	<1.0	-	<1.0
	5/11/2010	230	-	<1.0	-	<1.0
	8/3/2010	250	-	<1.0	-	<1.0
	11/2/2010	740	-	-	-	<1.0
	2/1/2011	120	-	-	-	<1.0
W-15C	2/11/2008	<50	-	<2	-	<10
	1/15/2009	29	-	<2	-	<10
	4/24/2009	43	-	<2	-	<10
	3/2/2010	<50	-	<1.0	-	<1.0
	5/11/2010	<50	-	<1.0	-	<1.0
	8/3/2010	<50	-	<1.0	-	<1.0
	11/2/2010	70	-	-	-	<1.0
	2/1/2011	94	-	-	-	<1.0
W-16A	11/9/2007	260	-	<0.2	-	<0.4
	2/6/2008	310	-	<2	-	<10
	1/21/2009	290	-	<2	-	<10
	4/27/2009	410	-	<2	-	<10
	3/5/2010	220	-	<1.00	-	<1.0
	5/14/2010	110	-	<1.00	-	<1.0
	8/9/2010	120	-	<1.00	-	<1.0
	11/5/2010	90	-	-	-	<1.0
	2/7/2011	320	-	-	-	<1.0
W-16B	11/9/2007	37	-	<0.2	-	<0.4
	2/6/2008	400	-	<2	-	<10
	1/21/2009	73	-	<2	-	<10
	4/27/2009	47	-	<2	-	<100
	3/8/2010	73	-	<1.0	-	<1.0
	5/14/2010	60	-	<1.0	-	<1.0
	8/9/2010	<50	-	<1.0	-	<1.0

Table III
Summary of Total Petroleum Hydrocarbon (TPH) and Emergent Chemical Results
Former CENCO Refinery
Santa Fe Springs, CA

Well ID	Date	TPH-g (ug/L)	TPH-d (ug/L)	HEX CHROME (ug/L)	1,4-Dioxane (ug/L)	1,2,3-TCP (ug/L)
W-16B	11/5/2010	110	-	-	-	<1.0
	2/7/2011	290	-	-	-	
W-16C	11/9/2007	170	-	<0.2	-	<0.4
	2/6/2008	360	-	<2	-	<10
	1/21/2009	510	-	<2	-	<10
	4/28/2009	170	-	<2	-	<10
	3/8/2010	95	-	<1.0	-	<1.0
	5/14/2010	63	-	<1.0	-	<1.0
	8/9/2010	<50	-	<1.0	-	<1.0
	11/5/2010	390	-	-	-	<1.0
	2/7/2011	440	-	-	-	<1.0
W-17A	2/14/2008	100	-	<2	-	<10
	1/16/2009	78	-	<2	-	<10
	4/22/2009	180	-	<2	-	<10
	3/3/2010	51	-	<1.0	-	<1.0
	5/12/2010	110	-	<1.0	-	<1.0
	8/4/2010	56	-	<1.0	-	<1.0
	11/3/2010	69	-	-	-	<1.0
	2/2/2011	<50	-	-	-	<1.0
W-17B	2/14/2008	39	-	<2	-	<10
	1/16/2009	38	-	<2	-	<10
	4/22/2009	<50	-	<2	-	<10
	3/3/2010	<50	-	<1.0	-	<1.0
	5/12/2010	54	-	<1.0	-	<1.0
	8/5/2010	<50	-	<1.0	-	<1.0
	11/3/2010	<50	-	-	-	<1.0
	2/2/2011	<50	-	-	-	<1.0
W-17C	2/14/2008	36	-	<2	-	<10
	1/16/2009	29	-	<2	-	<10
	4/23/2009	<50	-	<2	-	<10
	3/4/2010	<50	-	<1.0	-	<1.0
	5/12/2010	<50	-	<1.0	-	<1.0
	8/5/2010	<50	-	<1.0	-	<1.0
	11/3/2010	<50	-	-	-	<1.0
	2/2/2011	<50	-	-	-	<1.0
MW-701	2/4/2011	190	-	-	-	<1.0
MW-702	2/4/2011	2,300	-	-	-	<1.0

Table III
Summary of Total Petroleum Hydrocarbon (TPH) and Emergent Chemical Results
Former CENCO Refinery
Santa Fe Springs, CA

Well ID	Date	TPH-g (ug/L)	TPH-d (ug/L)	HEX CHROME (ug/L)	1,4-Dioxane (ug/L)	1,2,3-TCP (ug/L)
MW-703	2/4/2011	1,300	-	-	-	<1.0
MW-704	2/9/2011	27,000 [26,000]	-	-	-	<1.0 [<1.0]
MW-705	2/4/2011	3,100	-	-	-	<1.0
MW-706	2/4/2011	390	-	-	-	<1.0
MW-707	2/4/2011	2,000	-	-	-	<1.0
MW-708	2/4/2011	530,000	-	-	-	<1.0
MW-709	2/4/2011	500	-	-	-	<1.0
MW-710	2/8/2011	93 [110]	-	-	-	<1.0 [<1.0]
MW-711	2/8/2011	11,000	-	-	-	<1.0
MW-712	2/9/2011	14,000	-	-	-	<1.0
MW-713	2/9/2011	280	-	-	-	<1.0
MW-714	2/14/2011	370	-	-	-	<1.0
MW-715	2/14/2011	2,000	-	-	-	<1.0

NOTES:
HEX CHROME = Hexavalent Chromium
1,2,3 TCP = 1,2,3 Trichloropropane
1,4 DIOX = 1,4 Dioxane
TPH-d = Total Petroleum Hydrocrabons Diesel Range
TPH-g = Total Petroleum Hydrocrabons Gasoline Range
TPH = Total Petroleum Hydrocrabons
< = Not Detected above the laboratory detection limit
[result] = duplicate sample result
NS = Not Sampled
- = Not Tested / Not Applicable

TABLE IV
Summary of VOC and Oxygenate Results
Former CENCO Refinery
Santa Fe Springs, CA

Well	Sample Date	PCE	TCE	c1,2-DCE	t1,2-DCE	1,1-DCE	1,2-DCA	1,3,5-TMB	1,2,4-TMB	VC	B	T	E	X	sBUT	nPRO	CBNZ	1,1-DCA	ISO-P	MC	NAP	DIPE	MTBE	TBA
EW-1	11/1/1989	<5	<5	-	9.8	<5	<5	-	-	29	730	16	1400	1000	-	-	<5	<5	-	<5	-	-	-	-
	3/1/1990	<25	<25	-	<50	<25	<25	-	-	<100	1800	300	1800	620	-	-	<50	<25	-	<100	-	-	-	-
	4/1/1990	<1	<10	110	20	<10	<10	-	-	<20	1300	290	1600	2000	-	-	<10	<10	-	<5	-	-	-	-
	8/21/1998	<50	<50	<50	<50	<50	<50	<50	<50	<100	230	<50	630	170	<50	170	<50	<50	200	<50	150	-	<50	-
	1/28/1999	<50	<50	<50	<50	<50	<50	<50	<50	<100	110	<50	540	170	<50	150	<50	<50	170	<50	130	-	<50	-
	7/19/1999	<25	<25	<25	<25	<25	<13	25	<25	<13	110	<25	1000	340	<25	160	<25	<25	200	<250	<250	-	<25	-
	1/13/2000	NS	NS	NS	NS	NS	NS	NS	NS	NS	NS	NS	NS	NS	NS	NS	NS	NS	NS	NS	NS	-	NS	-
	7/31/2000	NS	NS	NS	NS	NS	NS	NS	NS	NS	NS	NS	NS	NS	NS	NS	NS	NS	NS	NS	NS	-	NS	-
	2/6/2001	NS	NS	NS	NS	NS	NS	NS	NS	NS	NS	NS	NS	NS	NS	NS	NS	NS	NS	NS	NS	-	NS	-
	7/26/2001	NS	NS	NS	NS	NS	NS	NS	NS	NS	NS	NS	NS	NS	NS	NS	NS	NS	NS	NS	NS	-	NS	-
	5/6/2002	NS	NS	NS	NS	NS	NS	NS	NS	NS	NS	NS	NS	NS	NS	NS	NS	NS	NS	NS	NS	-	NS	NS
	9/25/2002	NS	NS	NS	NS	NS	NS	NS	NS	NS	NS	NS	NS	NS	NS	NS	NS	NS	NS	NS	NS	-	NS	NS
	11/10/2006	<4	<4	6.3	8.4	<10	<4	<4	6.9	<10	65	<4	68	17	34	110	<4	<4	120	<10	42	<10	<10	<100
	2/9/2007	<2	<2	6.5	7.8	<5	<2	2.3	5.1	<5	41	<2	39	10	27	80	<2	<2	100	<5	26	<5	<5	<50
	5/10/2007	<4	0.92	6.9	6.9	<10	<4	1.4	2.6	<10	19	1.5	15	4.1	25	110	<4	<4	130	<10	10	<10	<10	17
	8/10/2007	<2	1.8	11	9.9	<5	<2	1.4	3.2	<5	36	2.3	14	5.3	46	170	<2	0.35	210	<5	20	<5	<5	15
	2/8/2008	<4	2.6	9.8	14	<10	<4	<4	0.48	2.6	73	1.9	4.9	<8	34	120	<4	0.54	140	<10	5.3	<10	<10	31
	2/3/2011	<1.0	1.3	4	5.9	<1.0	<0.50	<1.0	<1.0	<1.0	20	1.5	27	13	30	95	<1.0	<1.0	100	<1.0	42	<2	<1	<10
	2/3/2011	<1.0	1.1	3.5	5.1	<1.0	<0.50	<1.0	<1.0	<1.0	20	1.4	27	13	31	100	<1.0	<1.0	100	<1.0	22	<2	<1	<10
MW-101	6/1/1988	-	-	-	-	-	-	-	-	-	620	<5	<5	100	-	-	-	-	-	-	-	-	-	-
	9/1/1988	-	-	-	-	-	-	-	-	-	310	10	34	13	-	-	-	-	-	-	-	-	-	-
	12/1/1988	-	-	-	-	-	-	-	-	-	490	28	<5	<5	-	-	-	-	-	-	-	-	-	-
	6/1/1992	-	-	-	-	-	-	-	-	-	440	<5	<5	<5	-	-	-	-	-	-	-	-	-	-
	9/1/1992	-	-	-	-	-	-	-	-	-	340	<5	<5	<5	-	-	-	-	-	-	-	-	-	-
	12/1/1992	-	-	-	-	-	-	-	-	-	290	<5	<5	<5	-	-	-	-	-	-	-	-	-	-
	3/1/1993	-	-	-	-	-	-	-	-	-	200	<5	<5	<25	-	-	-	-	-	-	-	-	-	-
	12/1/1994	-	-	-	-	-	-	-	-	-	62	<5	5	<5	-	-	-	-	-	-	-	-	-	-
	3/1/1995	-	-	-	-	-	-	-	-	-	110	<5	110	<150	-	-	-	-	-	-	-	-	-	-
	9/1/1995	-	-	-	-	-	-	-	-	-	180	<4	180	<4	-	-	-	-	-	-	-	-	-	-
	12/13/1995	36	100	45	0.97	67	1.8	-	-	<0.5	90	5.9	6.4	2.9	-	-	-	9.3	-	1.3	-	-	-	-
	7/31/1996	24000	41	350	<0.3	52	1.6	-	-	<0.3	130	14	130	14	-	-	-	8.6	-	<0.3	-	-	<10	-
	12/17/1996	57	240	90	<25	140	<25	<25	<25	<50	<25	<50	<25	<50	<25	<25	-	<25	<25	<25	<25	-	<2	-
	1/19/1998	180	320	62	<5	<50000	<5	<5	<5	<10	65	<5	<5	<5	<5	<5	<5	17	<5	<5	<10	-	<5	-
	8/18/1998	34	<5	52	<5	92	<5	<5	<5	<10	140	<5	15	6.7	<5	<5	<5	<5	6.4	<5	<10	-	-	-
	1/26/1999	19.3	160	71.9	<5	97.9	<5	<5	<5	<10	68.4	<5	7.08	<5	<5	<5	<5	13.9	<5	<5	<10	-	<5	-
	7/19/1999	78	270	57	8.5	150	<1	<2	<2	<1	22	<2	2.4	<2	<2	<2	<2	18	<2	<20	<20	-	<2	-
	1/10/2000	210	260	25	3.5	130	2.6	<1	<1	<0.5	9.2	<1	<1	<1	<1	<1	<1	12	<1	<10	<10	-	<1	-
	8/3/2000	37	270	33	19	92	3.6	<2	<2	5	24	<2	<2	<2	<2	<2	<2	15	<2	<20	<20	-	<2	-
	2/9/2001	9.9	100	21	11	32	<2.5	<5	<5	3.2	26	<5	<5	<5	<5	<5	<5	7.5	<5	<50	<50	-	<5	-

TABLE IV
Summary of VOC and Oxygenate Results
Former CENCO Refinery
Santa Fe Springs, CA

Well	Sample Date	PCE	TCE	c1,2-DCE	t1,2-DCE	1,1-DCE	1,2-DCA	1,3,5-TMB	1,2,4-TMB	VC	B	T	E	X	sBUT	nPRO	CBNZ	1,1-DCA	ISO-P	MC	NAP	DIPE	MTBE	TBA
MW-101	7/26/2001	8.1	100	28	15	30	<5	<1	<1	4.3	25	<1	2.5	<1	<1	<1	<1	8.2	1.1	<10	<10	-	<1	-
	5/8/2002	6.2	78	16	5.6	16	<0.5	<1	<1	1.9	17	<1	1.3	<1	<1	<1	<1	2.9	<1	<10	<10	-	<1	<10000
	9/25/2002	4.5	79	14	4.5	18	<0.5	<1	<1	<0.5	31	<1	1.2	1.1	<1	<1	<1	3	1.2	<10	<10	-	<1	27000
	8/3/2006	<2	34	26	2.4	8.4	<2	<2	<2	<5	89	<2	3.6	<4	<5	<2	<2	<2	2.7	<5	<5	<5	<5	<50
	11/10/2006	<2	21	33	2.2	6.5	<2	<2	<2	<5	100	<2	<2	<4	<5	<2	<2	<2	<2	<5	<5	<5	<5	<50
	2/12/2007	<8	<8	47	<8	<20	<8	<8	<8	<20	240	<8	<8	<16	<20	<8	<8	<8	4.8	<20	<20	<20	<20	72
	5/11/2007	0.37	37	26	2.6	9.2	0.39	<2	<2	0.82	29	0.47	1	<4	1.2	0.46	<2	1.5	1.4	<5	0.76	0.3	<5	<50
	8/8/2007	0.43	46	21	<2	7.1	0.46	<2	<2	0.72	31	0.49	0.95	<4	1	0.35	<2	1	1.3	<5	<5	<5	<5	<50
	11/8/2007	<0.32	6.3	31	<0.27	5.7	<0.28	<0.26	0.24	<0.3	62	0.9	1.7	<0.9	1.2	0.6	<0.36	1.2	2	<0.95	<0.41	<0.25	<0.32	<4.9
MW-103	6/1/1988	-	-	-	-	-	-	-	-	-	970	74	<5	<5	-	-	-	-	-	-	-	-	-	-
	9/1/1988	-	-	-	-	-	-	-	-	-	300	<5	<5	8	-	-	-	-	-	-	-	-	-	-
	12/1/1988	-	-	-	-	-	-	-	-	-	370	<5	<5	<5	-	-	-	-	-	-	-	-	-	-
	3/1/1989	-	-	-	-	-	-	-	-	-	940	<5	<5	<5	-	-	-	-	-	-	-	-	-	-
	6/1/1989	-	-	-	-	-	-	-	-	-	700	<5	<5	<5	-	-	-	-	-	-	-	-	-	-
	9/1/1989	-	-	-	-	-	-	-	-	-	1000	30	<5	<5	-	-	-	-	-	-	-	-	-	-
	3/1/1992	-	-	-	-	-	-	-	-	-	210	<5	5	23	-	-	-	-	-	-	-	-	-	-
	6/1/1992	-	-	-	-	-	-	-	-	-	880	<5	<5	55	-	-	-	-	-	-	-	-	-	-
	9/1/1992	-	-	-	-	-	-	-	-	-	200	<5	<5	<5	-	-	-	-	-	-	-	-	-	-
	12/1/1992	-	-	-	-	-	-	-	-	-	350	<5	<5	<5	-	-	-	-	-	-	-	-	-	-
	3/1/1993	-	-	-	-	-	-	-	-	-	<5	8	19	10	-	-	-	-	-	-	-	-	-	-
	5/1/1993	-	-	-	-	-	-	-	-	-	4800	<250	<250	<250	-	-	-	-	-	-	-	-	-	-
	5/25/1993	-	-	-	-	-	-	-	-	-	4800	<250	<250	<250	-	-	-	-	-	-	-	-	-	-
	9/1/1993	-	-	-	-	-	-	-	-	-	1300	88	62	230	-	-	-	-	-	-	-	-	-	-
	11/1/1993	-	-	-	-	-	-	-	-	-	1400	<250	<250	<250	-	-	-	-	-	-	-	-	-	-
	12/1/1994	-	-	-	-	-	-	-	-	-	240	<10	<10	11	-	-	-	-	-	-	-	-	-	-
	3/1/1995	-	-	-	-	-	-	-	-	-	160	<5	<5	<15	-	-	-	-	-	-	-	-	-	-
	9/1/1995	-	-	-	-	-	-	-	-	-	900	<50	<50	<50	-	-	-	-	-	-	-	-	-	-
	12/13/1995	<0.5	<0.5	<0.5	<0.5	<0.5	2.1	-	-	2.5	410	4.1	2.6	77	-	-	-	2.2	-	<0.5	-	-	-	-
	7/31/1996	<0.3	0.38	0.7	<0.3	<0.3	1.7	-	-	<0.3	340	5	<0.5	12	-	-	-	17	-	<0.3	-	-	<10	-
	12/17/1996	8.9	<5	<5	<5	<5	<5	<5	<5	54	200	<5	<5	<10	<5	8.4	-	27	6	<5	<5	-	<10	-
	1/21/1998	<5	<5	<5	<5	<5	<5	<5	<5	28	230	<5	<5	<5	<5	15	<5	<5	11	<5	<10	-	<5	-
	8/19/1998	<5	<5	<5	<5	<5	<5	<5	<5	<10	220	<5	<5	<5	5.4	18	<5	<5	11	<5	<10	-	<5	-
	1/27/1999	<5	<5	<5	<5	<5	<5	<5	<5	<10	110	<5	<5	<5	<5	5.9	<5	<5	7.1	<5	<10	-	<5	-
	7/19/1999	<1	<1	1.2	<1	<1	<0.5	<1	<1	<0.5	61	1.1	<1	<1	3.9	8.1	<1	<1	8.8	<10	<10	-	<1	-
	1/12/2000	<1	<1	3	<1	<1	4	<1	<1	<0.5	81	<1	<1	<1	3.7	6.7	<1	<1	6.3	<10	<10	-	1.2	-
	8/4/2000	<1	1.2	2.9	<1	<1	1.5	<1	<1	0.75	<0.5	<1	<1	<1	3.9	<1	<1	<1	3.5	<10	<10	-	<1	-
	2/9/2001	<1	<1	2.4	<1	<1	<0.5	<1	<1	<0.5	0.87	<1	<1	<1	3.6	<1	<1	<1	4.7	<10	<10	-	<1	-
	7/25/2001	<1	<1	2.5	<1	<1	<0.5	1.7	5.8	<0.5	41	<1	<1	2.7	3.2	5.5	<1	<1	4.1	<10	<10	-	2.5	-
	5/8/2002	<1	<1	1.3	<1	<1	<0.5	<1	<1	<0.5	<0.5	<1	<1	<1	<1	<1	<1	<1	<1	<10	<10	-	<1	53000

TABLE IV
Summary of VOC and Oxygenate Results
Former CENCO Refinery
Santa Fe Springs, CA

Well	Sample Date	PCE	TCE	c1,2-DCE	t1,2-DCE	1,1-DCE	1,2-DCA	1,3,5-TMB	1,2,4-TMB	VC	B	T	E	X	sBUT	nPRO	CBNZ	1,1-DCA	ISO-P	MC	NAP	DIPE	MTBE	TBA
MW-103	9/25/2002	<1	<1	1.6	<1	<1	<0.5	<1	1.4	<0.5	40	<1	<1	1.3	4.3	13	<1	<1	6.7	<10	<10	-	1.4	40000
	8/3/2006	<2	<2	<2	<2	<5	<2	<2	<2	<5	<2	<2	<2	<4	<5	<2	<2	<2	<2	<5	<5	<5	71	200
	11/8/2006	<2	<2	<2	<2	<5	<2	<2	<2	<5	4.1	<2	<2	<4	<5	<2	<2	<2	3.1	<5	<5	<5	41	160
	2/8/2007	<2	<2	<2	<2	<5	<2	<2	<2	<5	36	<2	<2	<4	<5	<2	<2	<2	<2	<5	<5	<5	26	190
	5/9/2007	<2	<2	0.93	<2	<5	0.32	<2	<2	<5	0.51	<2	<2	<4	1.9	2.4	<2	<2	2.6	1.5	<5	<5	12	85
	8/8/2007	<2	<2	1.4	<2	<5	0.53	<2	<2	<5	1.3	<2	0.51	<4	3.8	7.3	<2	<2	6.8	<5	<5	<5	14	110
	11/6/2007	<0.32	<0.26	2	<0.27	<0.42	0.44	0.39	0.24	<0.3	11	0.49	1.2	3.2	5.1	14	<0.36	<0.27	11	<0.95	<0.41	<0.25	20	160
MW-104	6/1/1988	-	-	-	-	-	-	-	-	-	<5	<5	<5	<5	-	-	-	-	-	-	-	-	-	-
	9/1/1988	-	-	-	-	-	-	-	-	-	<5	<5	<5	<5	-	-	-	-	-	-	-	-	-	-
	12/1/1988	-	-	-	-	-	-	-	-	-	<5	<5	<5	<5	-	-	-	-	-	-	-	-	-	-
	3/1/1989	-	-	-	-	-	-	-	-	-	<5	<5	<5	<5	-	-	-	-	-	-	-	-	-	-
	6/1/1989	-	-	-	-	-	-	-	-	-	<5	<5	<5	<5	-	-	-	-	-	-	-	-	-	-
	9/1/1989	-	-	-	-	-	-	-	-	-	<5	<5	<5	<5	-	-	-	-	-	-	-	-	-	-
	12/1/1989	-	-	-	-	-	-	-	-	-	<5	<5	<5	<5	-	-	-	-	-	-	-	-	-	-
	3/1/1990	-	-	-	-	-	-	-	-	-	<5	<5	<5	<5	-	-	-	-	-	-	-	-	-	-
	6/1/1990	-	-	-	-	-	-	-	-	-	<5	<5	<5	<5	-	-	-	-	-	-	-	-	-	-
	9/1/1990	-	-	-	-	-	-	-	-	-	<5	<5	<5	<5	-	-	-	-	-	-	-	-	-	-
	12/1/1990	-	-	-	-	-	-	-	-	-	<5	<5	<5	<5	-	-	-	-	-	-	-	-	-	-
	3/1/1991	-	-	-	-	-	-	-	-	-	<5	<5	<5	<5	-	-	-	-	-	-	-	-	-	-
	6/1/1991	-	-	-	-	-	-	-	-	-	<5	<5	<5	<5	-	-	-	-	-	-	-	-	-	-
	9/1/1991	-	-	-	-	-	-	-	-	-	<5	<5	<5	<5	-	-	-	-	-	-	-	-	-	-
	12/1/1991	-	-	-	-	-	-	-	-	-	<5	<5	<5	<5	-	-	-	-	-	-	-	-	-	-
	3/1/1992	-	-	-	-	-	-	-	-	-	<5	<5	<5	<5	-	-	-	-	-	-	-	-	-	-
	6/1/1992	-	-	-	-	-	-	-	-	-	<5	<5	<5	<5	-	-	-	-	-	-	-	-	-	-
	9/1/1992	-	-	-	-	-	-	-	-	-	<5	<5	<5	<5	-	-	-	-	-	-	-	-	-	-
	12/1/1992	-	-	-	-	-	-	-	-	-	<5	<5	<5	<5	-	-	-	-	-	-	-	-	-	-
	3/1/1993	-	-	-	-	-	-	-	-	-	<5	<5	<5	<5	-	-	-	-	-	-	-	-	-	-
	5/1/1993	-	-	-	-	-	-	-	-	-	<5	<5	<5	<5	-	-	-	-	-	-	-	-	-	-
	5/25/1993	-	-	-	-	-	-	-	-	-	<5	<5	<5	<5	-	-	-	-	-	-	-	-	-	-
	9/1/1993	-	-	-	-	-	-	-	-	-	<5	<5	<5	<5	-	-	-	-	-	-	-	-	-	-
	11/1/1993	-	-	-	-	-	-	-	-	-	<5	<5	<5	<5	-	-	-	-	-	-	-	-	-	-
	3/1/1994	-	-	-	-	-	-	-	-	-	<5	<5	<5	<5	-	-	-	-	-	-	-	-	-	-
	6/1/1994	-	-	-	-	-	-	-	-	-	<5	<5	<5	<5	-	-	-	-	-	-	-	-	-	-
	12/1/1994	-	-	-	-	-	-	-	-	-	<5	<5	<5	<5	-	-	-	-	-	-	-	-	-	-
	3/1/1995	-	-	-	-	-	-	-	-	-	<5	<5	<5	<15	-	-	-	-	-	-	-	-	-	-
	9/1/1995	-	-	-	-	-	-	-	-	-	3	<2	<2	<2	-	-	-	-	-	-	-	-	-	-
	12/13/1995	-	-	-	0.78	-	-	-	-	-	3	0.6	<5	<5	-	-	-	2.7	-	-	-	-	-	-
	7/31/1996	<0.3	0.54	1.5	<0.3	<0.3	0.51	-	-	<0.3	2.2	1.8	<1	2.7	-	-	-	0.58	-	<0.3	-	-	<10	-
	12/16/1996	<1	<1	2.7	<1	<1	<1	<1	<1	3.2	4.2	<1	<1	<2	2.9	5.2	-	<1	10	<1	<1	-	<2	-

TABLE IV
Summary of VOC and Oxygenate Results
Former CENCO Refinery
Santa Fe Springs, CA

Well	Sample Date	PCE	TCE	c1,2-DCE	t1,2-DCE	1,1-DCE	1,2-DCA	1,3,5-TMB	1,2,4-TMB	VC	B	T	E	X	sBUT	nPRO	CBNZ	1,1-DCA	ISO-P	MC	NAP	DIPE	MTBE	TBA
MW-104	1/20/1998	<5	<5	<5	<5	<5	<5	<5	<5	<10	<5	<5	<5	<5	<5	<5	<5	<5	<5	<5	<10	-	<5	-
	8/18/1998	<5	<5	<5	<5	<5	<5	<5	<5	<10	<5	<5	<5	<5	<5	<5	<5	<5	<5	<5	<10	-	-	-
	1/27/1999	<5	<5	<5	<5	<5	<5	<5	<5	<10	<5	<5	<5	<5	<5	<5	<5	<5	<5	<5	<10	-	<5	-
MW-104A	7/19/1999	<1	1.2	5.6	<1	<1	1.2	<1	<1	<0.5	<0.5	<1	<1	<1	<1	<1	<1	<1	<1	<10	<10	-	<1	-
	1/13/2000	<1	<1	6.7	<1	<1	<0.5	<1	<1	5.7	<0.5	<1	<1	<1	<1	<1	<1	<1	<1	<10	<10	-	<1	-
	8/2/2000	<1	1.8	5.4	<1	<1	<0.5	<1	<1	<0.5	<0.5	<1	<1	<1	<1	<1	<1	<1	<1	<10	<10	-	<1	-
	2/7/2001	<1	1.4	4.2	<1	<1	<0.5	<1	<1	<0.5	<0.5	<1	<1	<1	<1	<1	<1	<1	<1	<10	<10	-	<1	-
	7/25/2001	<1	1.4	3.9	<1	<1	<0.5	<1	<1	<0.5	<0.5	<1	<1	<1	<1	<1	<1	<1	<1	<10	<10	-	<1	-
	5/7/2002	<1	1.4	4.3	<1	<1	<0.5	<1	<1	<0.5	<0.5	<1	<1	<1	<1	<1	<1	<1	<1	<10	<10	-	<1	31000
	9/24/2002	<1	1.6	5.4	1.4	<1	<0.5	<1	<1	<0.5	<0.5	<1	<1	<2	<1	<1	<1	<1	<1	<10	<10	-	<1	20000
	6/30/2004	<5	4J	8.1	2J	1J	<5	<5	<5	<5	<5	<5	<5	<1	<5	<5	<5	<5	<5	<5	-	-	<5	30J
	10/7/2005	<1	<1	3.4	<1	<1	<0.5	<1	<1	<0.5	<0.5	<1	<1	<1	<1	<1	<1	<1	<1	<10	<10	<2	<1	83
	2/15/2006	<5	<5	2	<5	<5	<5	<5	<5	<5	<1	<5	<5	<5	<5	<5	<5	<5	<5	<5	<5	<1	<1	30
	2/7/2007	<2	<2	<2	<2	<5	<2	<2	<2	<5	<2	<2	<2	<4	<5	<2	<2	<2	<2	<5	<5	<5	<5	120
	5/8/2007	<2	0.39	1.8	<2	<5	<2	<2	<2	<5	<2	0.37	<2	<4	<5	<2	<2	<2	<2	<5	<5	<5	<5	340
	8/8/2007	<2	0.78	2.9	0.51	<5	<2	<2	<2	<5	<2	<2	<2	<4	<5	<2	<2	<2	<2	<5	<5	<5	<5	150
	11/5/2007	<0.32	0.72	4	0.71	<0.42	<0.28	<0.26	<0.23	<0.3	<0.28	<0.36	<0.25	<0.9	<0.25	<0.27	<0.36	<0.27	<0.25	<0.95	<0.41	<0.25	<0.32	81
	2/4/2008	<2	0.79	5.2	0.91	0.44	<2	<2	<2	<5	<2	<2	<2	<4	<5	<2	<2	<2	<2	<5	<5	<5	<5	71
	1/16/2009	<2	0.39	4.6	0.57	0.47	<2	<2	0.55	<5	<2	<2	<2	1.2	<5	<2	<2	<2	<2	<5	<5	<5	<5	23
	4/22/2009	<2	0.46	4.5	0.62	<5	<2	<2	<2	<5	<2	<2	<2	<4	<5	<2	<2	<2	<2	<5	<5	<5	<5	38
	3/3/2010	<1.0	<1.0	3.7	<1.0	<1.0	<0.50	<1.0	<1.0	<1.0	<0.50	<0.50	<0.50	-	<1.0	<1.0	<1.0	<1.0	<1.0	<1.0	<1.0	-	<1.0	<10
	8/4/2010	<1.0	<1.0	4.5	<1.0	<1.0	<0.50	<1.0	<1.0	<1.0	<0.50	<0.50	<0.50	-	<1.0	<1.0	<1.0	<1.0	<1.0	<1.0	<1.0	-	<1.0	<10
	11/3/2010	<1.0	<1.0	3.6	<1.0	<1.0	<0.50	<1.0	<1.0	<1.0	<0.50	<0.50	<0.50	<1.0	<1.0	<1.0	<1.0	<1.0	<1.0	<1.0	<1.0	<2.0	<1.0	<10
	2/2/2011	<1.0	<1.0	2.1	<1.0	<1.0	<0.50	<1.0	<1.0	<1.0	<0.50	<0.50	<0.50	<1.0	<1.0	<1.0	<1.0	<1.0	<1.0	<1.0	<1.0	<2.0	<1.0	<10
	2/2/2011	<1.0	<1.0	2.2	<1.0	<1.0	<0.50	<1.0	<1.0	<1.0	<0.50	<0.50	<0.50	<1.0	<1.0	<1.0	<1.0	<1.0	<1.0	<1.0	<1.0	<2.0	<1.0	<10
MW-105	12/21/1995	16	46	9.4	-	13	3.3	-	-	-	11	1.7	0.81	3.7	-	-	-	4.5	-	-	-	-	-	-
	7/31/1996	24	33	8.4	<0.3	20	1.4	-	-	<0.3	91	1.8	2	1.8	-	-	-	12	-	<0.3	-	-	<10	-
	12/16/1996	80	110	10	<5	50	<5	<5	<5	<10	14	<5	<5	<10	<5	<5	-	<5	<5	<5	<5	-	<2	-
	1/20/1998	150	210	25	<5	140	<5	<5	<5	<10	21	<5	<5	<5	<5	<5	<5	22	<5	<5	<10	-	<5	-
	8/18/1998	96.7	162	25.3	<5	108	<5	<5	<5	<10	53.6	<5	<5	<5	<5	<5	<5	15.4	<5	<5	<10	-	-	-
	1/25/1999	125	187	22	<5	117	<5	<5	<5	6.43	<5	<5	<5	<5	<5	<5	<5	14	<5	<5	<10	-	<5	-
	7/19/1999	78	280	29	15	130	3.4	<1	<1	<0.5	4.8	<1	<1	<1	<1	<1	<1	16	<1	<10	<10	-	<1	-
	1/10/2000	<5	130	40	62	100	4	<5	<5	<2.5	61	<5	<5	<5	<5	<5	<5	20	<5	<50	<50	-	<5	-
	7/31/2000	<5	160	52	59	62	9.5	<5	<5	10	52	<5	<5	<5	<5	<5	<5	14	<5	<50	<9.5	-	<5	-
	2/6/2001	<5	47	33	21	32	<2.5	<5	<5	7.9	<2.5	<5	<5	<5	<5	<5	<5	12	<5	<50	<50	-	<5	-
	7/24/2001	<1	36	18	11	17	1.5	-	<1	<5	1	<1	<1	<1	<1	<1	<1	9	<1	<1	<10	-	<1	-
	5/7/2002	<2	38	14	6.8	10	<0.5	<1	<1	3.9	1.1	<1	<1	<1	<1	<1	<1	4.4	<1	<10	<10	-	<1	27000
	9/24/2002	<3	43	25	6.4	10	1.4	<1	<1	14	1.4	<1	<1	<2	<1	<1	<1	4.9	<1	<10	<10	-	<1	10000

TABLE IV
Summary of VOC and Oxygenate Results
Former CENCO Refinery
Santa Fe Springs, CA

Well	Sample Date	PCE	TCE	c1,2-DCE	t1,2-DCE	1,1-DCE	1,2-DCA	1,3,5-TMB	1,2,4-TMB	VC	B	T	E	X	sBUT	nPRO	CBNZ	1,1-DCA	ISO-P	MC	NAP	DIPE	MTBE	TBA
MW-105	6/30/2004	22	76	15	5.4	18	<5	<5	<5	7.2	<5	<5	<5	<1	<5	<5	<5	1J	<5	<5	<5	-	<5	<100
	10/6/2005	6.5	41	10	3.9	9.6	0.58	<1	<1	1.4	<0.5	<1	<1	<1	<1	<1	<1	5.8	<1	<10	<10	2.3	<1	31
	2/15/2006	4.4	36	8.8	3.2	7.4	<5	<5	<5	<5	<1	<5	<5	<5	<5	<5	<5	5.7	<5	<5	<5	1.2	<1	27
	8/1/2006	6	42	9.5	3.9	8.9	<2	<2	<2	<5	<2	<2	<2	<4	<5	<2	<2	3.9	<2	<5	<5	<5	<5	57
	11/8/2006	17	62	8.9	4.2	13	<2	<2	<2	<5	<2	<2	<2	<4	<5	<2	<2	3.8	<2	<5	<5	<5	<5	<50
	2/7/2007	19	57	12	4.8	12	<2	<2	<2	<5	<2	<2	<2	<4	<5	<2	<2	4.2	<2	<5	<5	<5	<5	<50
	5/9/2007	12	36	7.5	2.8	6	0.34	<2	<2	0.59	<2	<2	<2	<4	<5	<2	<2	2.6	<2	1.8	<5	0.78	<5	<50
	8/7/2007	23	62	11	5.6	11	0.6	<2	<2	1.1	<2	<2	<2	<4	<5	<2	<2	3.7	<2	<5	<5	0.98	0.32	<50
	11/5/2007	19	60	9.6	5.5	12	0.53	<0.26	<0.23	1.2	0.35	<0.36	<0.25	<0.9	<0.25	<0.27	<0.36	3.3	<0.25	<0.95	<0.41	0.95	<0.32	<4.9
	2/5/2008	25	74	11	6.9	14	1.1	<2	<2	2.3	1.2	<2	<2	<4	<5	<2	<2	2.6	<2	<5	<5	1.6	<5	<50
	1/15/2009	41	84	9	3.2	15	1	<2	<2	2.6	0.85	<2	<2	<4	<5	<2	<2	2.6	<2	<5	<5	0.86	<5	<50
	4/22/2009	22	62	9.5	3	9.9	1.2	<2	<2	1.9	0.66	<2	<2	<4	<5	<2	<2	2.4	<2	<5	<5	0.85	<5	<50
MW-106	12/20/1995	-	1.5	33	15	-	-	-	-	-	12	3.5	10	10	-	-	-	-	-	-	-	-	-	-
	7/31/1996	<0.3	2.5	26	17	0.54	<0.3	-	-	0.98	14	2.2	9	<5	-	-	-	<0.3	-	<0.3	-	-	3.6	-
	12/17/1996	<2	<2	63	26	<2	<2	<2	<2	<4	3.1	<2	<2	<4	<2	<2	-	<2	2.7	<2	<2	-	<2	-
	1/20/1998	<5	<5	46	10	<5	<5	<5	<5	<10	24	<5	8.1	<5	<5	<5	<5	<5	7.3	<5	<10	-	<5	-
	8/20/1998	<5	<5	430	5.8	<5	<5	<5	<5	<10	27	<5	84	<5	<5	5.9	<5	<5	9.6	<5	<10	-	<5	-
	1/27/1999	<5	<5	47	<5	<5	<5	<5	<5	<10	21000	<5	8.5	<5	<5	7.2	<5	<5	9	<5	<10	-	<5	-
	7/19/1999	<1	2.6	39	6.4	1.2	<0.5	<1	<1	<0.5	18	<1	7.7	<1	1.5	5.2	<1	1.7	7	<10	<10	-	<1	-
	1/14/2000	<1	<1	20	9.6	<1	<0.5	<1	<1	<0.5	4.1	<1	<1	<1	<1	<1	<1	2.2	<1	<10	<10	-	<1	-
	7/31/2000	21	2.1	26	21	<1	<0.5	<1	<1	25	5.3	<1	<1	<1	<1	<1	-	2.7	1	<1	<10	-	<1	-
	2/6/2001	<1	2.8	35	25	1.2	<0.5	<1	<1	15	2.3	<1	1.3	<1	<1	<1	<1	2	<1	<10	<10	-	<1	-
	7/24/2001	<1	2.1	33	23	1	<0.5	<1	<1	<0.5	1.7	<1	<1	<1	<1	<1	<1	1.8	1.8	<10	<10	-	<1	-
	5/7/2002	<1	1.9	22	17	<1	<0.5	<1	<1	15	2.4	<1	<1	<1	<1	<1	<1	1.6	<1	<10	<10	-	<1	38000
	9/24/2002	<1	1.6	24	24	1.1	<0.5	<1	<1	21	3.5	<1	<1	<2	<1	<1	<1	2.1	<1	<10	<10	-	<1	28000
	7/1/2004	<5	<5	15	21	2J	<5	<5	<5	<5	2.3J	0.77	1.1	<1	<5	<5	<5	2J	<5	<5	<5	-	<5	<100
MW-106A	8/2/2006	<2	<2	13	21	<5	<2	<2	<2	10	2.6	<2	<2	<4	<5	<2	<2	<2	7.5	<5	<5	<5	<5	<50
	11/9/2006	<2	<2	14	17	<5	<2	<2	<2	7	<2	<2	<2	<4	<5	<2	<2	<2	3.1	<5	<5	<5	<5	<50
	2/8/2007	<2	<2	15	20	<5	<2	<2	<2	13	2.6	<2	<2	<4	<5	5.9	<2	<2	9.6	<5	<5	<5	<5	<50
	5/10/2007	<2	0.28	9.9	12	<5	<2	<2	<2	7.9	1.5	<2	0.28	<4	1.4	1.7	<2	0.6	6.5	<5	<5	0.36	<5	20
	8/9/2007	<2	0.45	12	14	0.46	<2	<2	<2	12	1.6	<2	0.6	<4	2	5.1	0.47	0.83	10	<5	0.69	0.54	<5	19
	11/7/2007	<0.32	<0.26	11	9.5	<0.42	<0.28	<0.26	<0.23	9.9	1.4	<0.36	0.84	<0.9	1.7	7.5	<0.36	0.7	10	<0.95	1.6	0.5	<0.32	20
	2/5/2008	<2	0.29	10	7.8	0.44	<2	<2	<2	10	1.6	<2	0.42	<4	1.5	7.3	<2	0.73	10	<5	1.8	0.46	<5	16
	1/19/2009	<2	0.29	13	11	<5	<2	<2	<2	6.3	0.46	<2	<2	<4	0.75	1	<2	0.99	2.9	<5	<5	0.31	<5	17
	4/23/2009	<2	<2	5.5	6.3	<5	<2	<2	<2	10	1.9	<2	3.7	<4	3.4	11	<2	0.82	18	1.8	0.93	0.26	<5	18
	3/5/2010	<1.0	<1.0	3.5	2	<1.0	<0.50	<1.0	<1.0	<1.0	8.4	<0.50	<0.50	-	1.1	2.5	<1.0	<1.0	5.6	<1.0	<1.0	-	<1.0	<10
	5/13/2010	<1.0	<1.0	<1.0	2	<1.0	<0.50	<1.0	<1.0	21	8.6	<0.50	<0.50	-	<1.0	1	<1.0	<1.0	4.3	<1.0	<1.0	-	<1.0	<10
	8/6/2010	<1.0	<1.0	1	3.5	<1.0	<0.50	<1.0	<1.0	25	12	<0.50	<0.50	-	1.6	2.1	<1.0	1.2	8	<1.0	<1.0	-	<1.0	<10

TABLE IV
Summary of VOC and Oxygenate Results
Former CENCO Refinery
Santa Fe Springs, CA

Well	Sample Date	PCE	TCE	c1,2-DCE	t1,2-DCE	1,1-DCE	1,2-DCA	1,3,5-TMB	1,2,4-TMB	VC	B	T	E	X	sBUT	nPRO	CBNZ	1,1-DCA	ISO-P	MC	NAP	DIPE	MTBE	TBA
MW-106A	11/4/2010	<1.0	<1.0	1.5	<1.0	<1.0	<0.50	<1.0	<1.0	8.8	0.64	<0.50	<0.50	<1.0	<1.0	<1.0	<1.0	<1.0	3.5	<1.0	<1.0	<2.0	<1.0	<10
	2/3/2011	<1.0	<1.0	<1.0	<1.0	<1.0	<0.50	<1.0	<1.0	<1.0	<0.50	<0.50	<0.50	<1.0	1.6	1.1	<1.0	<1.0	7.7	<1.0	<1.0	<2.0	<1.0	<10
MW-107	12/21/1995	-	-	28	6.5	-	-	-	-	-	16	0.99	0.77	2.9	-	-	-	-	-	-	-	-	-	-
	7/31/1996	<0.3	0.78	31	19	0.45	<0.3	-	-	1.1	31	4.4	6.6	<5	-	-	-	<0.3	-	<0.3	-	-	110	-
	12/17/1996	<5	<5	80	33	<5	<5	<5	<5	<10	22	<5	<5	<10	<5	<5	-	<5	<5	<5	<5	-	<2	-
	1/20/1998	<5	<5	120	47	<5	<5	<5	<5	<10	42	<5	<5	<5	<5	<5	<5	<5	<5	<5	<10	-	<5	-
	8/20/1998	<5	<5	98	25	<5	<5	<5	<5	<10	28	<5	<5	<5	<5	<5	<5	<5	6.2	<5	<10	-	<5	-
	1/27/1999	<5	<5	100	44	<5	<5	<5	<5	<10	36	<5	<5	<5	<5	<5	<5	<5	6.9	<5	<10	-	<5	-
	7/19/1999	<5	<5	120	77	<5	<2.5	<5	<5	<2.5	38	<5	<5	<5	<5	<5	<5	<5	<5	<50	<50	-	<5	-
	1/12/2000	<1	3.4	120	110	1.1	<0.5	<1	<1	<0.5	87	<1	7.8	<1	3	2.2	1.3	1.6	11	<10	<10	-	<1	-
	7/31/2000	<5	<5	43	59	<5	<2.5	<5	<5	53	250	<5	20	<5	8.6	49	<5	8.3	48	<50	<50	-	<5	-
	2/6/2001	<1	<1	45	4.5	<1	<0.5	<1	<1	21	180	<1	4	<1	9.7	57	<1	20	54	<10	<10	-	<1	-
	7/26/2001	<1	<1	33	13	<1	<0.5	<1	<1	<0.5	220	<1	38	<1	8.5	53	<1	33	51	<10	<10	-	<2	-
	5/9/2002	<2	<20	8.8	5.7	<2	<1	<2	<2	30	310	<2	3	<2	8.4	48	<2	21	45	<20	<20	-	<2	26000
	9/25/2002	<2	<20	5.8	<2	<2	<1	<2	<2	28	770	<2	5.7	<4	12	68	<2	30	63	<20	<20	-	<2	20000
	7/1/2004	<5	<5	<5	<5	<5	<5	<5	<5	12	-	-	-	-	20	140	<5	14	130	<5	2J	-	-	-
MW-107A	8/2/2006	<2	<2	3.9	2.4	<5	<2	<2	<2	<5	3.7	<2	<2	<4	<5	16	<2	<2	20	<5	<5	<5	<5	<50
	11/9/2006	<2	2.5	6.2	5.3	<5	<2	<2	<2	<5	24	<2	4.7	9.2	<5	18	<2	<2	22	<5	<5	<5	<5	<50
	2/8/2007	<2	3.9	9.6	7.4	<5	<2	<2	<2	<5	80	<2	21	26	<5	17	<2	<2	17	<5	7.4	<5	<5	<50
	5/10/2007	<2	3.5	6.6	6	<5	<2	0.29	<2	2	42	1	14	17	2.7	15	<2	<2	20	<5	6	<5	<5	21
	8/9/2007	<2	4.8	8.8	9.5	<5	<2	0.33	<2	2.3	61	2	15	41	3.8	27	<2	0.31	30	<5	8.5	<5	<5	18
	11/7/2007	<0.32	3.7	6.4	9.4	<0.42	<0.28	0.49	<0.23	4.4	44	4.2	16	26	4.4	37	<0.36	0.3	39	<0.95	11	<0.25	<0.32	35
	2/5/2008	<2	3.2	5.6	9.2	<5	<2	0.38	<2	5	19	3	3	12	5	36	<2	0.29	39	<5	3.9	<5	<5	37
	1/19/2009	<2	2.1	7.2	7.5	<5	<2	0.29	<2	2	13	1.9	1.6	10	9.1	50	<2	<2	49	<5	1.3	<5	<5	66
	4/23/2009	<2	3.6	9.4	11	<5	<2	2.8	3.2	1.3	79	1.2	13	94	6.3	43	<2	<2	44	1.6	7.5	<5	<5	67
	3/5/2010	<1.0	4.6	6.8	7.6	<1.0	<0.50	<1.0	<1.0	<1.0	17	0.68	1.7	-	4.4	22	<1.0	<1.0	25	<1.0	6	<2.0	<1.0	<10
	5/13/2010	<1.0	4.8	5.9	5.9	<1.0	<0.50	<1.0	2	<1.0	8.8	11	4.2	-	3.4	16	<1.0	<1.0	20	<1.0	3.3	<2.0	4.7	<10
	8/6/2010	<1.0	8.7	9.5	7.5	<1.0	<0.50	<1.0	1.9	<1.0	120	160	39	-	2.2	16	<1.0	<1.0	16	<1.0	29	<2.0	<1.0	<10
	11/4/2010	<1.0	7.5	7.7	5.8	<1.0	<0.50	<1.0	<1.0	<1.0	39	11	16	29	3.1	17	<1.0	<1.0	21	<1.0	4.1	<2.0	<1.0	<10
	11/4/2010	<1.0	7.1	6.9	5.1	<1.0	<0.50	<1.0	<1.0	<1.0	36	10	14	26	3.2	17	<1.0	<1.0	21	<1.0	4.2	<2.0	<1.0	<10
	2/3/2011	<1.0	3.3	3.2	2.4	<1.0	<0.50	<1.0	<1.0	<1.0	4.1	2.2	3.2	14	2	14	<1.0	<1.0	15	<1.0	1.2	<2.0	<1.0	<10
MW-201	6/1/1988	-	-	-	-	-	-	-	-	-	1000	150	<5	250	-	-	-	-	-	-	-	-	-	-
	9/1/1988	-	-	-	-	-	-	-	-	-	520	210	110	400	-	-	-	-	-	-	-	-	-	-
	12/1/1988	-	-	-	-	-	-	-	-	-	420	65	19	100	-	-	-	-	-	-	-	-	-	-
	3/1/1989	-	-	-	-	-	-	-	-	-	210	27	24	47	-	-	-	-	-	-	-	-	-	-
	6/1/1989	-	-	-	-	-	-	-	-	-	350	<5	<5	50	-	-	-	-	-	-	-	-	-	-
	9/1/1989	-	-	-	-	-	-	-	-	-	830	100	32	210	-	-	-	-	-	-	-	-	-	-

TABLE IV
Summary of VOC and Oxygenate Results
Former CENCO Refinery
Santa Fe Springs, CA

Well	Sample Date	PCE	TCE	c1,2-DCE	t1,2-DCE	1,1-DCE	1,2-DCA	1,3,5-TMB	1,2,4-TMB	VC	B	T	E	X	sBUT	nPRO	CBNZ	1,1-DCA	ISO-P	MC	NAP	DIPE	MTBE	TBA
MW-201	12/1/1989	-	-	-	-	-	-	-	-	-	510	76	24	170	-	-	-	-	-	-	-	-	-	-
	3/1/1990	-	-	-	-	-	-	-	-	-	350	38	29	85	-	-	-	-	-	-	-	-	-	-
	6/1/1990	-	-	-	-	-	-	-	-	-	820	49	84	83	-	-	-	-	-	-	-	-	-	-
	9/1/1990	-	-	-	-	-	-	-	-	-	340	15	20	73	-	-	-	-	-	-	-	-	-	-
	12/1/1990	-	-	-	-	-	-	-	-	-	240	12	7	55	-	-	-	-	-	-	-	-	-	-
	3/1/1991	-	-	-	-	-	-	-	-	-	500	<5	<5	240	-	-	-	-	-	-	-	-	-	-
	6/1/1991	-	-	-	-	-	-	-	-	-	530	<5	<5	<5	-	-	-	-	-	-	-	-	-	-
	9/1/1991	-	-	-	-	-	-	-	-	-	370	<5	<5	130	-	-	-	-	-	-	-	-	-	-
	12/1/1991	-	-	-	-	-	-	-	-	-	340	10	9	80	-	-	-	-	-	-	-	-	-	-
	6/1/1992	-	-	-	-	-	-	-	-	-	25	<5	<5	<5	-	-	-	-	-	-	-	-	-	-
	9/1/1992	-	-	-	-	-	-	-	-	-	350	<5	<5	130	-	-	-	-	-	-	-	-	-	-
	12/1/1992	-	-	-	-	-	-	-	-	-	1150	<5	<5	560	-	-	-	-	-	-	-	-	-	-
	3/1/1993	-	-	-	-	-	-	-	-	-	560	77	<50	410	-	-	-	-	-	-	-	-	-	-
	12/1/1994	-	-	-	-	-	-	-	-	-	1300	66	500	560	-	-	-	-	-	-	-	-	-	-
	3/1/1995	-	-	-	-	-	-	-	-	-	290	<5	<5	<15	-	-	-	-	-	-	-	-	-	-
	9/1/1995	-	-	-	-	-	-	-	-	-	1100	28	130	140	-	-	-	-	-	-	-	-	-	-
	12/13/1995	58	110	44	1.7	87	4.4	-	-	-	440	42	120	94	-	-	-	9.4	-	0.7	-	-	-	-
	7/31/1996	110	120	34	<0.3	98	2.7	-	-	<0.3	480	20	32	25	-	-	-	9.4	-	<0.3	-	-	<10	-
	12/17/1996	210	210	89	<10	170	<10	28	140	<20	110	12	96	121	<10	21	-	<10	21	<10	<10	-	<10	-
	1/21/1998	160	180	71	5.5	74	<5	9.9	20	<10	250	14	87	17	<5	21	<5	9.9	19	<5	11	-	<5	-
	8/18/1998	16	120	63	<5	46	<5	<5	<5	<10	440	8.6	20	13	<5	<5	<5	6.3	5.1	<5	11	-	-	-
	7/19/1999	40	160	63	12	61	<2.5	15	53	<2.5	160	29	69	54.6	<5	25	<5	9.3	21	<50	<50	-	<5	-
	1/12/2000	<5	38	43	<5	19	<2.5	<5	32	<2.5	520	14	53	16	<5	15	<5	<5	16	<50	<50	-	<6	-
	8/4/2000	<5	32	76	<5	19	<2.5	<5	33	<2.5	570	15	61	21	<5	12	<5	<5	12	<50	<10	-	<7	-
	2/9/2001	<10	13	100	<10	22	<5	<10	24	<5	310	12	130	14	<10	32	<10	<10	26	<100	<100	-	<8	-
	7/26/2001	<10	8	57	6.8	13	<5	2.5	17	<10	180	9.6	56	24.7	33	16	<20	23	14	<100	<100	-	<10	-
	5/9/2002	<2	14	33	4.2	6.4	<1	3.8	5.6	1.1	120	6.6	45	20	2.1	8.6	<2	<2	8.8	<20	<20	-	5.1	<20000
	9/26/2002	<1	29	27	3.3	7.2	<0.5	14	12	1.4	11	11	68	34.3	2.2	12	<1	<1	10	<10	<1	-	<1	<10000
	6/30/2004	<5	<5	21	<5	<5	<5	12	5.4	2J	120	12	210	71	5J	24	<5	<5	27	<5	16	-	<5	<100
	10/7/2005	<5	<5	49	<5	<5	34	16	33	<2.5	740	37	470	91	16	86	<5	<5	85	<50	120	<10	<5	130
	2/15/2006	<5	1.6	8.1	<5	<5	<5	<5	1.2	<5	128	2.5	15	6.3	1.1	3.3	<5	<5	5.3	<5	<5	<1	<1	20
	8/2/2006	<2	13	13	<2	<5	<2	<2	<2	<5	73	<2	8.2	4.4	<5	3	<2	<2	4.3	<5	<5	<5	<5	<50
	11/9/2006	<2	30	25	<2	5.1	<2	<2	4.8	<5	58	3.4	49	13	<5	16	<2	<2	13	<5	22	<5	<5	<50
	2/7/2007	<2	7.4	25	<2	<5	<2	<2	<2	<5	94	<2	8.6	5.4	<5	2.3	<2	<2	3	<5	<5	<5	<5	<50
	5/9/2007	<2	8.5	38	<2	3.1	0.83	<2	<2	0.67	47	0.75	4	2.8	0.69	1.3	<2	0.4	2.7	1.7	<5	<5	<5	<50
	8/8/2007	<2	22	31	<2	3.2	1	0.42	0.41	0.9	44	0.75	5.1	3.5	1.2	2.3	<2	0.37	5.3	<5	<5	<5	<5	<50
	11/6/2007	<0.32	22	38	0.91	4.5	1.1	8.4	6.3	1.6	110	3.9	57	36	2.2	9.9	<0.36	0.52	13	<0.95	25	<0.25	<0.32	92
	2/7/2008	<2	36	33	<2	<5	<2	<2	<2	<5	39	<2	3.2	<4	<5	<2	<2	<2	2.7	<5	<5	<5	<5	<50
	1/20/2009	<2	<2	16	0.6	0.73	2.1	1.7	2.4	1.6	97	3.9	17	20	1.6	5.3	<2	<2	5.8	<5	<5	<5	<5	44
	4/28/2009	<2	<2	12	<2	<5	2.2	3.5	0.7	0.79	70	1.1	15	1.2	1.5	7.1	<2	<2	10	<5	<5	<5	<5	12

TABLE IV
Summary of VOC and Oxygenate Results
Former CENCO Refinery
Santa Fe Springs, CA

Well	Sample Date	PCE	TCE	c1,2-DCE	t1,2-DCE	1,1-DCE	1,2-DCA	1,3,5-TMB	1,2,4-TMB	VC	B	T	E	X	sBUT	nPRO	CBNZ	1,1-DCA	ISO-P	MC	NAP	DIPE	MTBE	TBA
MW-202	11/1/1993	-	-	-	-	-	-	-	-	-	7700	<500	2600	6300	-	-	-	-	-	-	-	-	-	-
	3/1/1995	-	-	-	-	-	-	-	-	-	400	7	29	42	-	-	-	-	-	-	-	-	-	-
	9/1/1995	-	-	-	-	-	-	-	-	-	500	10	48	42	-	-	-	-	-	-	-	-	-	-
	12/1/1995	-	-	-	-	-	-	-	-	-	330	21	51	74	-	-	-	-	-	-	-	-	-	-
	7/31/1996	<0.3	0.37	2	0.34	<0.3	0.58	-	-	<0.3	640	15	<0.5	32	-	-	-	0.54	-	<0.3	-	-	62	-
	12/17/1996	<50	<50	<50	<50	<50	<50	<50	<50	<10	890	<50	<50	<100	<50	100	-	<50	55	<50	<50	-	<20	-
	1/21/1998	<5	<5	<5	<5	<5	<5	<5	<5	<10	450	<5	19	21	16	100	<5	<5	57	<5	<10	-	<5	-
	8/18/1998	<5	<5	<5	<5	<5	<5	<5	<5	<10	280	<5	<5	<5	26	91	<5	<5	49	<5	<10	-	<5	-
	1/27/1999	<5	<5	<5	<5	<5	<5	<5	<5	<10	76	<5	<5	<5	29	130	<5	<5	67	<5	<10	-	<5	-
	7/19/1999	<2	<2	3.3	<2	<2	<1	<2	<2	<1	36	2.1	3.7	2.4	29	130	<2	<2	62	<20	<20	-	<2	-
	1/11/2000	<1	<1	1.9	<1	<1	<0.5	<1	<1	<0.5	49	<1	2.4	2.3	23	29	<1	2.2	46	<10	<10	-	1.2	-
	2/7/2000	<1	<1	2.3	<1	<1	<0.5	<1	<1	3.3	25	<1	<1	<1	10	7.7	<1	7.3	9.9	<10	<10	-	<1	-
	8/2/2000	<1	<1	4.6	<1	<1	<0.5	<1	<1	<0.5	41	<1	<1	1.8	23	10	<1	11	35	<10	<10	-	<1	-
	7/24/2001	<1	<1	<1	<1	<1	<0.5	<1	<1	<0.5	38	<1	<1	1.8	4	16	<1	1.8	6.1	<10	<10	-	<1	-
	5/8/2002	<1	<1	<1	<1	<1	<0.5	<1	<1	<0.5	330	2.9	2.1	3.8	3.6	32	<1	1.2	12	<10	<10	-	16	66000
	9/26/2002	<5	<5	<5	<5	<5	<2.5	<5	<5	<2.5	170	7.8	14	52.6	5.6	69	<5	<5	34	<50	<50	-	12	59000
MW-203	6/1/1988	-	-	-	-	-	-	-	-	-	46	<5	<5	<5	-	-	-	-	-	-	-	-	-	-
	9/1/1988	-	-	-	-	-	-	-	-	-	76	<5	<5	<5	-	-	-	-	-	-	-	-	-	-
	12/1/1988	-	-	-	-	-	-	-	-	-	64	<5	<5	<5	-	-	-	-	-	-	-	-	-	-
	3/1/1989	-	-	-	-	-	-	-	-	-	110	<5	<5	<5	-	-	-	-	-	-	-	-	-	-
	6/1/1989	-	-	-	-	-	-	-	-	-	110	<5	<5	<5	-	-	-	-	-	-	-	-	-	-
	9/1/1989	-	-	-	-	-	-	-	-	-	80	<5	5	<5	-	-	-	-	-	-	-	-	-	-
	12/1/1989	-	-	-	-	-	-	-	-	-	100	<5	<5	<5	-	-	-	-	-	-	-	-	-	-
	3/1/1990	-	-	-	-	-	-	-	-	-	90	<5	<5	<5	-	-	-	-	-	-	-	-	-	-
	6/1/1990	-	-	-	-	-	-	-	-	-	88	2	7	2	-	-	-	-	-	-	-	-	-	-
	9/1/1990	-	-	-	-	-	-	-	-	-	130	<5	9	<5	-	-	-	-	-	-	-	-	-	-
	12/1/1990	-	-	-	-	-	-	-	-	-	94	<5	7	<5	-	-	-	-	-	-	-	-	-	-
	3/1/1991	-	-	-	-	-	-	-	-	-	100	<5	<5	<5	-	-	-	-	-	-	-	-	-	-
	6/1/1991	-	-	-	-	-	-	-	-	-	100	<5	<5	<5	-	-	-	-	-	-	-	-	-	-
	9/1/1991	-	-	-	-	-	-	-	-	-	140	<5	<5	<5	-	-	-	-	-	-	-	-	-	-
	12/1/1991	-	-	-	-	-	-	-	-	-	130	<5	<5	<5	-	-	-	-	-	-	-	-	-	-
	3/1/1992	-	-	-	-	-	-	-	-	-	120	<5	<5	<5	-	-	-	-	-	-	-	-	-	-
	6/1/1992	-	-	-	-	-	-	-	-	-	85	<5	<5	<5	-	-	-	-	-	-	-	-	-	-
	9/1/1992	-	-	-	-	-	-	-	-	-	46	<5	<5	<5	-	-	-	-	-	-	-	-	-	-
	12/1/1992	-	-	-	-	-	-	-	-	-	64	<5	<5	<5	-	-	-	-	-	-	-	-	-	-
	3/1/1993	-	-	-	-	-	-	-	-	-	69	<5	<5	<5	-	-	-	-	-	-	-	-	-	-
	5/1/1993	-	-	-	-	-	-	-	-	-	86	<5	<5	<5	-	-	-	-	-	-	-	-	-	-
	5/25/1993	-	-	-	-	-	-	-	-	-	86	<5	<5	<5	-	-	-	-	-	-	-	-	-	-

TABLE IV
Summary of VOC and Oxygenate Results
Former CENCO Refinery
Santa Fe Springs, CA

Well	Sample Date	PCE	TCE	c1,2-DCE	t1,2-DCE	1,1-DCE	1,2-DCA	1,3,5-TMB	1,2,4-TMB	VC	B	T	E	X	sBUT	nPRO	CBNZ	1,1-DCA	ISO-P	MC	NAP	DIPE	MTBE	TBA
MW-203	9/1/1993	-	-	-	-	-	-	-	-	-	40	<5	<5	<5	-	-	-	-	-	-	-	-	-	-
	12/1/1994	-	-	-	-	-	-	-	-	-	39	<5	<5	<5	-	-	-	-	-	-	-	-	-	-
	3/1/1995	-	-	-	-	-	-	-	-	-	27	<5	<5	<15	-	-	-	-	-	-	-	-	-	-
	9/1/1995	-	-	-	-	-	-	-	-	-	28	<2	<2	<2	-	-	-	-	-	-	-	-	-	-
	12/13/1995	-	-	40	4.5	-	-	-	-	1.4	37	1	12	1.9	-	-	-	0.61	-	-	-	-	-	-
	7/31/1996	<0.3	0.34	22	1.7	<0.3	<0.3	-	-	2	43	2	1.8	<5	-	-	-	0.34	-	<0.3	-	-	<20	-
	12/17/1996	<1	<1	<1	<1	<1	<1	<1	<1	<2	30	<1	<1	<2	<1	<1	-	<1	1.2	<1	<1	-	<2	-
	1/20/1998	<5	<5	28	<5	<5	<5	<5	<5	<10	24	<5	<5	<5	<5	<5	<5	<5	<5	<5	<10	-	<5	-
	8/20/1998	<5	<5	35	<5	<5	<5	<5	<5	<10	17	<5	<5	<5	<5	<5	<5	<5	<5	<5	<10	-	<5	-
	1/27/1999	<5	<5	35	<5	<5	<5	<5	<5	<10	12	<5	<5	<5	<5	<5	<5	<5	<5	<5	<10	-	<5	-
	7/19/1999	<1	<1	24	1.9	<1	<0.5	<1	<1	<0.5	16	<1	<1	<1	<1	<1	<1	<1	<1	<10	<10	-	<1	-
	1/12/2000	<1	<1	14	<1	<1	0.53	<1	<1	<5	7.8	<1	<1	<1	<1	<1	<1	<1	<1	<10	<10	-	1	-
	7/31/2000	<1	<1	16	<1	<1	<0.5	<1	<1	0.51	97	<1	<1	<1	<1	<1	<1	<1	<1	<10	<10	-	<5	-
	2/6/2001	<1	<1	25	1.6	<1	<0.5	<1	<1	1.1	13	<1	<1	<1	<1	<1	<1	<1	<1	<10	<10	-	<1	-
	7/24/2001	<1	<1	24	1.8	<1	<0.5	<1	<1	8.3	14	<1	<1	<1	<1	<1	<1	<1	<1	<10	<10	-	<1	-
	5/8/2002	<2	<1	21	1.7	<1	<0.5	<1	<1	0.53	8.7	<1	<1	<1	<1	<1	<1	<1	<1	<10	<10	-	<1	30000
	9/25/2002	<3	<1	27	2.5	<1	<0.5	<1	<1	1.1	11	<1	<1	<20	<1	<1	<1	<1	<1	<10	<10	-	<1	25000
	7/1/2004	<5	<5	24	4J	<5	<5	<5	<5	<5	9.2	0.5J	0.75	<1	<5	-	<5	<5	<5	<5	<5	-	<5	<100
	8/2/2006	<2	<2	18	4.4	<5	<2	<2	<2	11	3.1	<2	<2	<4	<5	<2	<2	<2	<2	<5	<5	<5	<5	<50
	11/9/2006	<2	<2	20	4.8	<5	<2	<2	<2	10	2.5	<2	<2	<4	<5	<2	<2	<2	<2	<5	<5	<5	<5	<50
	2/8/2007	<2	<2	21	3.4	<5	<2	<2	<2	9.7	2	<2	<2	<4	<5	<2	<2	<2	<2	<5	<5	<5	<5	<50
	5/10/2007	<2	<2	14	2.8	<5	<2	<2	<2	7.8	1	<2	<2	<4	<5	<2	0.56	0.75	<2	<5	<5	0.41	0.7	28
	8/9/2007	<2	<2	16	2.4	<5	<2	<2	<2	8.5	0.88	<2	<2	<4	<5	<2	0.5	0.77	<2	<5	<5	0.47	0.59	27
	11/7/2007	<0.32	<0.26	18	2.5	<0.42	<0.28	<0.26	<0.23	8	0.78	<0.36	<0.25	<0.9	<0.25	<0.27	<0.36	0.76	<0.25	<0.95	<0.41	0.47	0.69	28
	2/5/2008	<2	<2	19	2.4	<5	<2	<2	<2	8.7	1.4	<2	<2	<4	<5	<2	<2	0.77	<2	<5	<5	0.47	0.63	32
	1/19/2009	<2	<2	20	3	<5	<2	<2	<2	7.6	0.53	<2	<2	<4	<5	<2	<2	0.92	<2	<5	<5	0.58	0.84	40
	4/23/2009	<2	<2	12	1.8	<5	<2	<2	<2	4.9	0.63	<2	<2	<4	<5	<2	<2	0.58	<2	1.4	<5	0.36	3.1	36
MW-204	6/1/1988	-	-	-	-	-	-	-	-	-	19	<5	<5	<5	-	-	-	-	-	-	-	-	-	-
	9/1/1988	-	-	-	-	-	-	-	-	-	6	<5	<5	<5	-	-	-	-	-	-	-	-	-	-
	12/1/1988	-	-	-	-	-	-	-	-	-	33	<5	<5	<5	-	-	-	-	-	-	-	-	-	-
	3/1/1989	-	-	-	-	-	-	-	-	-	39	<5	<5	<5	-	-	-	-	-	-	-	-	-	-
	6/1/1989	-	-	-	-	-	-	-	-	-	76	<5	<5	<5	-	-	-	-	-	-	-	-	-	-
	9/1/1989	-	-	-	-	-	-	-	-	-	64	<5	<5	<5	-	-	-	-	-	-	-	-	-	-
	12/1/1989	-	-	-	-	-	-	-	-	-	160	<5	<5	<5	-	-	-	-	-	-	-	-	-	-
	3/1/1990	-	-	-	-	-	-	-	-	-	9	<5	<5	<5	-	-	-	-	-	-	-	-	-	-
	6/1/1990	-	-	-	-	-	-	-	-	-	2	<5	<5	<5	-	-	-	-	-	-	-	-	-	-
	9/1/1990	-	-	-	-	-	-	-	-	-	25	<5	<5	6	-	-	-	-	-	-	-	-	-	-
	12/1/1990	-	-	-	-	-	-	-	-	-	<5	<5	<5	<5	-	-	-	-	-	-	-	-	-	-
	3/1/1991	-	-	-	-	-	-	-	-	-	<5	<5	<5	<5	-	-	-	-	-	-	-	-	-	-

TABLE IV
Summary of VOC and Oxygenate Results
Former CENCO Refinery
Santa Fe Springs, CA

Well	Sample Date	PCE	TCE	c1,2-DCE	t1,2-DCE	1,1-DCE	1,2-DCA	1,3,5-TMB	1,2,4-TMB	VC	B	T	E	X	sBUT	nPRO	CBNZ	1,1-DCA	ISO-P	MC	NAP	DIPE	MTBE	TBA
MW-204	6/1/1991	-	-	-	-	-	-	-	-	-	<5	<5	<5	<5	-	-	-	-	-	-	-	-	-	-
	9/1/1991	-	-	-	-	-	-	-	-	-	27	<5	<5	<5	-	-	-	-	-	-	-	-	-	-
	12/1/1991	-	-	-	-	-	-	-	-	-	47	<5	<5	<5	-	-	-	-	-	-	-	-	-	-
	3/1/1992	-	-	-	-	-	-	-	-	-	90	<5	<5	<5	-	-	-	-	-	-	-	-	-	-
	6/1/1992	-	-	-	-	-	-	-	-	-	110	71	<5	20	-	-	-	-	-	-	-	-	-	-
	9/1/1992	-	-	-	-	-	-	-	-	-	90	20	<5	<5	-	-	-	-	-	-	-	-	-	-
	12/1/1992	-	-	-	-	-	-	-	-	-	2700	3700	<5	1060	-	-	-	-	-	-	-	-	-	-
	4/1/1993	-	-	-	-	-	-	-	-	-	130	28	21	193	-	-	-	-	-	-	-	-	-	-
	5/1/1993	-	-	-	-	-	-	-	-	-	780	<50	<50	<50	-	-	-	-	-	-	-	-	-	-
	5/25/1993	-	-	-	-	-	-	-	-	-	780	<50	<50	<50	-	-	-	-	-	-	-	-	-	-
	12/1/1994	-	-	-	-	-	-	-	-	-	5500	630	190	990	-	-	-	-	-	-	-	-	-	-
	3/1/1995	-	-	-	-	-	-	-	-	-	5000	77	120	490	-	-	-	-	-	-	-	-	-	-
	9/1/1995	-	-	-	-	-	-	-	-	-	6900	4700	650	3700	-	-	-	-	-	-	-	-	-	-
	12/13/1995	-	-	-	-	-	-	-	-	-	880	670	240	860	-	-	-	-	-	-	-	-	-	-
	8/1/1996	<1	1.1	2.9	<1	<1	7.2	-	-	5.2	1400	1300	520	1700	-	-	-	3.3	-	<1	-	-	32	-
	12/17/1996	<50	<50	<50	<50	<50	<50	<50	<50	<100	750	58	<50	<100	<50	<50	-	<50	<50	<50	<50	-	<200	-
	1/21/1998	<5	<5	<5	<5	<5	<5	23	90	9	2300	79	210	500	81	36	<5	<5	12	<5	65	-	5.1	-
	8/21/1998	<50	<50	<50	<50	<50	150	<50	200	<100	5100	510	520	1730	<50	54	<50	<50	<50	<50	<100	-	<50	-
	1/28/1999	<50	<50	<50	<50	<50	<50	61	250	12	3300	120	530	2080	<50	48	<50	<50	18	<50	94	-	5.2	-
	7/19/1999	<10	<10	<10	<10	<10	<5	11	47	<5	560	<10	110	230	<100	23	<10	<10	<10	<100	<100	-	27	-
	1/11/2000	<10	<10	<10	<10	<10	<5	<10	<10	<5	270	<10	<10	14	<10	19	<10	<10	<10	<100	<100	-	<10	-
	8/3/2000	<5	<5	<5	<5	<5	<2.5	<5	<5	<2.5	400	<5	12	10	<5	21	<5	<5	8.2	<50	<10	-	<5	-
	2/8/2001	<1	<1	<1	<1	<1	<0.5	<1	<1	<0.5	55	1.4	<1	1.5	<1	2.9	<1	<1	1.4	<10	<10	-	<1	-
	7/24/2001	<1	<1	1.5	<1	<1	<0.5	<1	<1	<0.5	200	<1	12	4.8	<1	<1	<1	4.7	1.3	<10	<10	-	1.6	-
	5/9/2002	<2	<2	2.7	<2	<2	<1	8.9	26	3.5	250	37	120	289	<2	13	<2	3.5	5.7	<20	<20	-	<2	170000
	9/26/2002	<2	<2	3.6	<2	<2	<1	7.7	22	3.4	67	2.5	19	55.5	<2	9.5	<2	<2	5	<20	<20	-	<2	200000
	6/30/2004	<5	<5	4J	<5	<5	<5	2J	6.8	<5	30	<5	7.6	6.5	<5	<5	<5	<5	2J	<5	4J	-	<5	150
	10/7/2005	<1	<1	3.4	<1	<1	1.6	1.2	2.3	<0.5	5.7	<1	4.2	2.1	<1	1.1	<1	<1	1.1	<10	<10	<2	<1	90
	2/15/2006	<5	<5	2.6	<5	<5	<5	1.2	2.6	<5	1.5	<5	2.5	1.4	<5	<5	<5	<5	<5	<5	<5	<1	<1	91
	8/1/2006	<2	<2	3.9	<2	<5	<2	6.7	14	<5	<2	<2	9.5	8.2	<5	2	<2	<2	<2	<5	<5	<5	<5	67
	11/10/2006	<2	<2	5.5	<2	<5	<2	<2	<2	<5	<2	<2	<2	<4	<5	<2	<2	<2	<2	<5	<5	<5	<5	<50
	2/7/2007	<2	<2	2.8	<2	<5	<2	16	25	<5	4.9	<2	11	15	<5	2.1	<2	<2	<2	<5	5.6	<5	<5	64
	11/6/2007	<0.32	<0.26	2.2	<0.27	<0.42	0.4	0.42	0.65	<0.3	<0.28	<0.36	<0.25	<0.9	<0.25	<0.27	<0.36	<0.27	<0.25	<0.95	<0.41	<0.25	<0.32	81
	2/4/2008	<2	<2	1.6	<2	<5	0.37	<2	0.38	<5	<2	<2	<2	<4	<5	<2	<2	<2	<2	<5	0.42	<5	<5	71
	4/23/2009	<2	<2	5.9	<2	<5	<2	0.84	0.74	<5	<2	<2	<2	<4	<5	<2	<2	<2	<2	1.4	0.51	<5	<5	71
MW-205	6/1/1988	-	-	-	-	-	-	-	-	-	13	<5	<5	<5	-	-	-	-	-	-	-	-	-	-
	9/1/1988	-	-	-	-	-	-	-	-	-	27	<5	<5	<5	-	-	-	-	-	-	-	-	-	-
	12/1/1988	-	-	-	-	-	-	-	-	-	120	<5	<5	<5	-	-	-	-	-	-	-	-	-	-
	3/1/1989	-	-	-	-	-	-	-	-	-	40	<5	<5	<5	-	-	-	-	-	-	-	-	-	-

TABLE IV
Summary of VOC and Oxygenate Results
Former CENCO Refinery
Santa Fe Springs, CA

Well	Sample Date	PCE	TCE	c1,2-DCE	t1,2-DCE	1,1-DCE	1,2-DCA	1,3,5-TMB	1,2,4-TMB	VC	B	T	E	X	sBUT	nPRO	CBNZ	1,1-DCA	ISO-P	MC	NAP	DIPE	MTBE	TBA
MW-205	6/1/1989	-	-	-	-	-	-	-	-	-	120	<5	<5	<5	-	-	-	-	-	-	-	-	-	-
	9/1/1989	-	-	-	-	-	-	-	-	-	81	<5	<5	<5	-	-	-	-	-	-	-	-	-	-
	12/1/1989	-	-	-	-	-	-	-	-	-	170	<5	<5	<5	-	-	-	-	-	-	-	-	-	-
	3/1/1990	-	-	-	-	-	-	-	-	-	140	<5	<5	<5	-	-	-	-	-	-	-	-	-	-
	6/1/1990	-	-	-	-	-	-	-	-	-	56	<5	<5	<5	-	-	-	-	-	-	-	-	-	-
	9/1/1990	-	-	-	-	-	-	-	-	-	45	<5	<5	<5	-	-	-	-	-	-	-	-	-	-
	12/1/1990	-	-	-	-	-	-	-	-	-	47	<5	<5	<5	-	-	-	-	-	-	-	-	-	-
	3/1/1991	-	-	-	-	-	-	-	-	-	40	<5	<5	<5	-	-	-	-	-	-	-	-	-	-
	6/1/1991	-	-	-	-	-	-	-	-	-	<5	<5	<5	<5	-	-	-	-	-	-	-	-	-	-
	9/1/1991	-	-	-	-	-	-	-	-	-	43	<5	<5	<5	-	-	-	-	-	-	-	-	-	-
	12/1/1991	-	-	-	-	-	-	-	-	-	85	<5	<5	<5	-	-	-	-	-	-	-	-	-	-
	3/1/1992	-	-	-	-	-	-	-	-	-	35	<5	<5	<5	-	-	-	-	-	-	-	-	-	-
	6/1/1992	-	-	-	-	-	-	-	-	-	6	<5	<5	<5	-	-	-	-	-	-	-	-	-	-
	9/1/1992	-	-	-	-	-	-	-	-	-	5	<5	<5	<5	-	-	-	-	-	-	-	-	-	-
	12/1/1992	-	-	-	-	-	-	-	-	-	10	<5	<5	<5	-	-	-	-	-	-	-	-	-	-
	3/1/1993	-	-	-	-	-	-	-	-	-	<5	<5	<5	<5	-	-	-	-	-	-	-	-	-	-
	5/1/1993	-	-	-	-	-	-	-	-	-	22	<5	<5	<5	-	-	-	-	-	-	-	-	-	-
	5/25/1993	-	-	-	-	-	-	-	-	-	22	<5	<5	<5	-	-	-	-	-	-	-	-	-	-
	11/1/1993	-	-	-	-	-	-	-	-	-	32	<5	<5	<5	-	-	-	-	-	-	-	-	-	-
	12/1/1994	-	-	-	-	-	-	-	-	-	<5	<5	<5	<5	-	-	-	-	-	-	-	-	-	-
	3/1/1995	-	-	-	-	-	-	-	-	-	<5	<5	<5	<15	-	-	-	-	-	-	-	-	-	-
	9/1/1995	-	-	-	-	-	-	-	-	-	5.3	<2	<2	<2	-	-	-	-	-	-	-	-	-	-
	12/13/1995	2.8	80	51	5.3	22	2	-	-	-	110	1.3	18	37	-	-	-	7.3	-	0.58	-	-	-	-
	7/31/1996	3.5	84	30	<0.3	14	<0.3	-	-	<0.3	5.1	<2	<2	<2	-	-	-	2.8	-	<0.3	-	-	<10	-
	12/16/1996	<2	45	35	<2	7.1	<2	<2	<2	<4	<2	<2	<2	<4	<2	<2	-	<2	<2	<2	<2	-	2	-
	1/20/1998	<5	48	27	<5	8.7	<5	<5	<5	<10	<5	<5	<5	<5	<5	<5	<5	<5	<5	<5	<10	-	<5	-
	8/21/1998	<5	62	32	<5	10	<5	<5	<5	<10	<5	<5	<5	<5	<5	<5	<5	<5	<5	<5	<10	-	<5	-
	1/26/1999	<5	25.1	26.1	<5	<5	<5	<5	<5	<10	6.87	<5	<5	<5	<5	<5	<5	<5	<5	<5	<10	-	<5	-
	7/19/1999	<1	12	23	1.8	2.6	<0.5	<1	<1	<0.5	10	<1	<1	<1	<1	<1	<1	<1	<1	<10	<10	-	<1	-
	1/11/2000	<1	<1	13	<1	<1	<0.5	<1	<1	13	26	1.3	2	4.3	<1	1.1	<1	<1	2.3	<10	<10	-	<1	-
	8/2/2000	<1	<1	6	<1	<1	<0.5	<1	<1	<0.5	11	<1	<1	<1	<1	<1	<1	<1	<1	<10	<10	-	-	-
	2/7/2001	<1	1.1	5.2	<1	<1	<0.5	8.5	1.7	0.96	37	<1	12	2.4	<1	1.5	<1	<1	1.6	<10	<10	-	<1	-
	7/26/2001	<1	1.1	17	<1	1.5	<0.5	<1	<1	<0.5	21	<1	1.1	<1	<1	<1	<1	<1	<1	<10	<10	-	<1	-
	5/8/2002	<1	11	22	<1	1.1	<0.5	<1	<1	0.65	9.7	<1	<1	<1	<1	<1	<1	<1	<1	<10	<10	-	<1	<10000
	9/25/2002	<1	<1	10	<1	<1	<0.5	1.1	<1	4.7	24	<1	<1	<1	<1	<1	<1	<1	<1	<10	<10	-	<1	4000
	6/30/2004	<5	-	6.5	-	<5	<5	<5	<5	<5	3J	<5	<5	<1	<5	<5	<5	<5	<5	<5	<5	-	<5	<100
	10/6/2005	<1	<1	4.2	<1	<1	<0.5	<1	<1	<0.5	55	<1	<1	<1	<1	<1	<1	<1	<1	<10	<10	<2	<1	<10
	2/15/2006	<5	<5	19	<5	<5	<5	<5	<5	<5	35	<5	<5	<5	<5	<5	<5	<5	<5	<5	<5	<1	<1	<10
	8/2/2006	<2	<2	35	<2	<5	<2	<2	<2	<5	40	<2	<2	<4	<5	<2	<2	<2	<2	<5	<5	<5	<5	<50
	11/8/2006	<2	<2	48	<2	<5	<2	<2	<2	<5	7	<2	<2	<4	<5	<2	<2	<2	<2	<5	<5	<5	<5	<50

TABLE IV
Summary of VOC and Oxygenate Results
Former CENCO Refinery
Santa Fe Springs, CA

Well	Sample Date	PCE	TCE	c1,2-DCE	t1,2-DCE	1,1-DCE	1,2-DCA	1,3,5-TMB	1,2,4-TMB	VC	B	T	E	X	sBUT	nPRO	CBNZ	1,1-DCA	ISO-P	MC	NAP	DIPE	MTBE	TBA
MW-205	2/7/2007	<2	<2	32	<2	<5	<2	<2	<2	<5	24	<2	<2	<4	<5	<2	<2	<2	<2	<5	<5	<5	<5	<50
	5/9/2007	<2	<2	40	0.85	0.95	0.54	<2	<2	0.41	7.4	<2	<2	<4	<5	<2	<2	<2	<2	1.6	<5	<5	<5	<50
	8/8/2007	<2	0.3	29	<2	0.88	1.2	<2	<2	0.65	6	<2	<2	<4	<5	<2	<2	<2	<2	<5	<5	<5	<5	<50
	11/6/2007	<0.32	<0.26	23	0.7	0.85	1.8	<0.26	<0.23	1.5	12	<0.36	<0.25	<0.9	<0.25	<0.27	<0.36	<0.27	0.32	<0.95	<0.41	<0.25	<0.32	12
	2/5/2008	<2	0.28	14	<2	<5	2	<2	<2	1.8	4.9	<2	<2	<4	<5	<2	<2	<2	<2	<5	<5	<5	<5	9.2
	1/19/2009	<4	<4	3	<4	<10	<4	<4	<4	<10	150	0.86	2	<8	0.6	0.78	<4	<4	1.5	<10	<10	<10	<10	13
	4/22/2009	<2	<2	0.6	<2	<5	<2	<2	<2	<5	96	<2	0.38	<4	0.27	<2	<2	<2	0.37	<5	<5	<5	<5	33
MW-206	6/1/1988	-	-	-	-	-	-	-	-	-	5800	2400	2100	4900	-	-	-	-	-	-	-	-	-	-
	9/1/1988	-	-	-	-	-	-	-	-	-	4200	1000	2000	6600	-	-	-	-	-	-	-	-	-	-
	12/1/1988	-	-	-	-	-	-	-	-	-	4300	920	2100	5500	-	-	-	-	-	-	-	-	-	-
	3/1/1989	-	-	-	-	-	-	-	-	-	2700	3200	2400	12000	-	-	-	-	-	-	-	-	-	-
	6/1/1989	-	-	-	-	-	-	-	-	-	3100	1200	2300	8600	-	-	-	-	-	-	-	-	-	-
	9/1/1989	-	-	-	-	-	-	-	-	-	4500	620	2400	6500	-	-	-	-	-	-	-	-	-	-
	12/1/1989	-	-	-	-	-	-	-	-	-	3200	1000	2000	6600	-	-	-	-	-	-	-	-	-	-
	3/1/1990	-	-	-	-	-	-	-	-	-	3700	1700	2600	9400	-	-	-	-	-	-	-	-	-	-
	6/1/1990	-	-	-	-	-	-	-	-	-	3700	960	2000	6300	-	-	-	-	-	-	-	-	-	-
	9/1/1990	-	-	-	-	-	-	-	-	-	5100	2100	2300	6800	-	-	-	-	-	-	-	-	-	-
	12/1/1990	-	-	-	-	-	-	-	-	-	7100	2100	2400	8100	-	-	-	-	-	-	-	-	-	-
	3/1/1991	-	-	-	-	-	-	-	-	-	4900	2600	2200	9500	-	-	-	-	-	-	-	-	-	-
	6/1/1991	-	-	-	-	-	-	-	-	-	5220	1080	2400	6880	-	-	-	-	-	-	-	-	-	-
	9/1/1991	-	-	-	-	-	-	-	-	-	4500	2100	2000	5400	-	-	-	-	-	-	-	-	-	-
	12/1/1991	-	-	-	-	-	-	-	-	-	3400	720	2500	4740	-	-	-	-	-	-	-	-	-	-
	3/1/1992	-	-	-	-	-	-	-	-	-	2000	470	2500	4870	-	-	-	-	-	-	-	-	-	-
	6/1/1992	-	-	-	-	-	-	-	-	-	3200	420	2100	2100	-	-	-	-	-	-	-	-	-	-
	9/1/1992	-	-	-	-	-	-	-	-	-	9900	1400	3200	7300	-	-	-	-	-	-	-	-	-	-
	12/1/1992	-	-	-	-	-	-	-	-	-	13000	2000	6000	13000	-	-	-	-	-	-	-	-	-	-
	12/1/1994	-	-	-	-	-	-	-	-	-	8400	4900	1800	9500	-	-	-	-	-	-	-	-	-	-
	3/1/1995	-	-	-	-	-	-	-	-	-	9000	720	2000	5800	-	-	-	-	-	-	-	-	-	-
	9/1/1995	-	-	-	-	-	-	-	-	-	6200	800	1600	3600	-	-	-	-	-	-	-	-	-	-
	12/13/1995	-	-	-	-	-	-	-	-	-	110	16	32	100	-	-	-	-	-	-	-	-	-	-
	7/31/1996	<0.3	1.4	20	<0.3	22	5.8	-	-	<0.3	570	110	420	490	-	-	-	8.8	-	<0.3	-	-	510	-
	12/18/1996	<100	<100	<100	<100	<100	<100	140	190	<200	2200	<100	1200	340	<100	120	-	<100	<100	<100	130	-	<20	-
	1/21/1998	<5	<5	130	<5	82	<5	12	35	<10	1500	290	1600	780	11	220	50	<5	85	<5	59	-	<5	-
	8/20/1998	NS	NS	NS	NS	NS	NS	NS	NS	NS	NS	NS	NS	NS	NS	NS	NS	NS	NS	NS	NS	-	NS	-
MW-501	3/1/1995	-	-	-	-	-	-	-	-	-	4200	230	1000	2700	-	-	-	-	-	-	-	-	-	-
	9/1/1995	-	-	-	-	-	-	-	-	-	2400	270	<200	<200	-	-	-	-	-	-	-	-	-	-
	12/13/1995	-	-	8.5	-	1	3.2	-	-	-	1600	100	880	2200	-	-	-	1.6	-	1	-	-	-	-
	7/31/1996	<0.3	0.39	7.2	<0.3	<0.3	1.3	-	-	<0.3	1700	73	220	1100	-	-	-	0.81	-	<0.3	-	-	180	-

TABLE IV
Summary of VOC and Oxygenate Results
Former CENCO Refinery
Santa Fe Springs, CA

Well	Sample Date	PCE	TCE	c1,2-DCE	t1,2-DCE	1,1-DCE	1,2-DCA	1,3,5-TMB	1,2,4-TMB	VC	B	T	E	X	sBUT	nPRO	CBNZ	1,1-DCA	ISO-P	MC	NAP	DIPE	MTBE	TBA
MW-501	12/18/1996	<50	<50	<50	<50	<50	<50	130	310	<100	1200	<50	510	650	<50	200	-	<50	92	<50	<50	-	<10	-
	1/21/1998	<5	<5	<5	<5	<5	<5	<5	9.3	<10	260	<5	11	23	<5	6.1	<5	<5	<5	<5	<10	-	<5	-
	8/20/1998	NS	NS	NS	NS	NS	NS	NS	NS	NS	NS	NS	NS	NS	NS	NS	NS	NS	NS	NS	NS	-	NS	-
	1/26/1999	NS	NS	NS	NS	NS	NS	NS	NS	NS	NS	NS	NS	NS	NS	NS	NS	NS	NS	NS	NS	-	NS	-
MW-501A	7/19/1999	<25	<25	<25	<25	<13	<13	<25	<25	<13	1300	<25	<25	25	<25	52	<25	<25	41	<250	<250	-	<25	-
	1/13/2000	<10	<10	<10	<10	<10	<5	<10	<10	<5	1600	18	<10	23	<10	42	<10	<10	34	<100	<100	-	<10	-
	8/2/2000	<10	<10	<10	<10	<10	<5	<10	<10	<6	980	11	12	14	<10	150	<10	<10	85	<100	<10	-	-	-
	2/7/2001	<10	<10	<10	<10	<10	<5	<10	<10	6.5	680	<10	10	<10	<10	180	<10	<10	90	<100	<100	-	<10	-
	7/25/2001	<10	<10	<10	<10	<10	<5	<10	<10	<5	140	<10	<10	<10	<10	210	<10	13	98	<100	<100	-	85	-
	5/8/2002	<2	<2	<2	<2	<2	<1	<2	<2	2.4	690	4.3	6.8	5.9	9.3	190	<2	4.2	100	<20	<20	-	130	<20000
	9/26/2002	<10	<10	<10	<10	<10	<5	<10	<10	5.5	520	<10	<10	<20	24	380	<10	<10	180	<100	<100	-	570	<100000
	8/3/2006	<2	<2	<2	<2	<5	<2	25	6.2	<5	6300	32	170	56	24	140	<2	<2	120	<5	32	<5	700	84
	11/10/2006	<40	<40	<40	<40	<100	<40	<40	<40	<100	3300	<40	100	<80	<100	250	<40	<40	140	<100	<100	<100	1100	<1000
	2/12/2007	<40	<40	<40	<40	<100	<40	44	<40	<100	3800	<40	130	<80	<100	380	<40	<40	160	<100	<100	<100	1100	<1000
	5/11/2007	<100	<100	<100	<100	<250	<100	24	<100	<250	2000	<100	84	<200	16	250	<100	<100	130	<250	<250	<250	640	<2500
	8/10/2007	<20	<20	<20	<20	<50	<20	27	3.6	<50	1100	15	49	31	23	300	<20	<20	170	<50	<50	<50	630	54
	11/8/2007	<6.4	<5.2	<6.4	<5.4	<8.4	<5.6	17	<4.6	<6	1400	11	13	<18	20	290	<7.2	<5.4	150	<19	<8.2	<5	410	<98
MW-502	6/1/1988	-	-	-	-	-	-	-	-	-	950	79	62	16	-	-	-	-	-	-	-	-	-	-
	9/1/1988	-	-	-	-	-	-	-	-	-	1300	180	2800	12000	-	-	-	-	-	-	-	-	-	-
	12/1/1988	-	-	-	-	-	-	-	-	-	6500	860	1500	5500	-	-	-	-	-	-	-	-	-	-
	3/1/1989	-	-	-	-	-	-	-	-	-	5300	1200	1900	7100	-	-	-	-	-	-	-	-	-	-
	9/1/1994	-	-	-	-	-	-	-	-	-	9800	860	1900	3300	-	-	-	-	-	-	-	-	-	-
	12/1/1994	-	-	-	-	-	-	-	-	-	8400	1600	1600	6000	-	-	-	-	-	-	-	-	-	-
	3/1/1995	-	-	-	-	-	-	-	-	-	18000	480	2100	7500	-	-	-	-	-	-	-	-	-	-
	9/1/1995	-	-	-	-	-	-	-	-	-	15000	690	3300	8800	-	-	-	-	-	-	-	-	-	-
	12/13/1995	-	-	6.9	-	-	6.1	-	-	-	6900	950	3300	8500	-	-	-	0.89	1.1	-	-	-	-	-
	7/13/1996	<0.3	0.52	6.8	<0.3	0.76	12	-	-	<0.3	13000	400	1800	6800	-	-	-	<0.3	-	<0.3	-	-	1000	-
	12/18/1996	<500	<500	<500	<500	<500	<500	<500	<500	<1000	11000	<500	2100	570	<500	<500	-	<500	<500	<500	<500	-	<10	-
	1/22/1998	<25	<25	<25	<25	<25	<25	70	300	<50	7800	130	1300	921	<25	180	<25	<25	90	<25	320	-	70000	-
	8/19/1998	<5	<5	10	<5	<5	<5	60	340	<10	12000	100	1400	953	10	140	<5	<5	67	<5	280	-	290000	-
	1/26/1999	<5	<5	10.4	<5	<5	<5	47.1	179	<10	8800	80.4	1030	554	15.1	135	<5	<5	76.7	<5	255	-	119000	-
	7/19/1999	<5000	<5000	<5000	<5000	<5000	<2500	<5000	<5000	<2500	11000	<5000	<5000	<5000	<5000	<5000	<5000	<5000	<5000	<50000	<50000	-	92000	-
	1/13/2000	<1000	<1000	<1000	<1000	<1000	<500	<1000	<1000	<500	8100	<1000	<1000	<1000	<10000	<1000	<1000	<1000	<1000	<10000	<10000	-	8700	-
	8/2/2000	<100	<100	<100	<100	<100	<50	<100	<100	<50	6300	100	250	200	<100	110	<100	<100	<1000	<100	160	-	4500	-
	2/7/2001	<50	<50	<50	<50	<50	<50	<50	<50	<25	5000	82	230	<50	<50	92	<50	<50	62	<500	<500	-	6500	-
	7/25/2001	<50	<50	<50	<50	<50	<50	<50	89	<25	6500	170	400	513	<50	110	<50	<50	62	<500	<500	-	18000	-
	5/9/2002	<200	<200	<200	<200	<200	<100	<200	<200	<100	4300	<200	390	230	<200	<200	<200	<200	<200	<2000	<2000	-	14000	<2000000
	9/26/2002	<100	<100	<100	<100	<100	<50	<100	100	<50	4000	<100	540	230	<100	100	<100	<100	<100	<1000	<1000	-	9400	<1000000

TABLE IV
Summary of VOC and Oxygenate Results
Former CENCO Refinery
Santa Fe Springs, CA

Well	Sample Date	PCE	TCE	c1,2-DCE	t1,2-DCE	1,1-DCE	1,2-DCA	1,3,5-TMB	1,2,4-TMB	VC	B	T	E	X	sBUT	nPRO	CBNZ	1,1-DCA	ISO-P	MC	NAP	DIPE	MTBE	TBA
MW-502	10/5/2005	<100	<100	<100	<100	<100	<50	110	<100	<50	900	<100	430	110	<100	110	<100	<100	<100	<1000	<1000	<200	15000	<1000
	2/14/2006	<50	<50	<50	<50	<50	<50	139	86	<50	1280	32	616	182	<50	117	<50	<50	87	<50	183	<10	29300	<100
	8/4/2006	<2	<2	<2	<2	<5	<2	98	160	<5	2500	38	160	740	11	52	<2	<2	55	<5	130	<5	29000	790
	11/10/2006	<40	<40	<40	<40	<100	<40	240	110	<100	1800	51	820	260	<100	180	<40	<40	150	<100	290	<100	19000	<1000
	2/9/2007	<400	<400	<400	<400	<1000	<400	<400	<400	<1000	2200	<400	500	<800	<1000	<400	<400	<400	<400	<1000	<1000	<1000	23000	<10000
	5/11/2007	<200	<200	<200	<200	<500	<200	250	400	<500	4000	59	500	720	<500	65	<200	<200	63	<500	170	<500	29000	<5000
	8/10/2007	<100	<100	<100	<100	<250	<100	200	200	<250	3300	50	420	490	<250	72	<100	<100	74	<250	92	<250	34000	610
	11/8/2007	<64	<52	<64	<54	<84	<56	100	50	<60	2100	<72	530	<180	<50	140	<72	<54	96	<190	230	<50	16000	<980
	2/11/2008	<200	<200	<200	<200	<500	<200	98	30	<500	3900	52	430	120	<500	140	<200	<200	100	<500	270	<500	27000	<5000
MW-503	6/1/1988	-	-	-	-	-	-	-	-	-	600	140	340	600	-	-	-	-	-	-	-	-	-	-
	9/1/1988	-	-	-	-	-	-	-	-	-	800	280	300	910	-	-	-	-	-	-	-	-	-	-
	12/1/1988	-	-	-	-	-	-	-	-	-	1500	570	380	960	-	-	-	-	-	-	-	-	-	-
	3/1/1989	-	-	-	-	-	-	-	-	-	400	190	360	750	-	-	-	-	-	-	-	-	-	-
	6/1/1989	-	-	-	-	-	-	-	-	-	600	340	630	1200	-	-	-	-	-	-	-	-	-	-
	9/1/1989	-	-	-	-	-	-	-	-	-	990	550	200	850	-	-	-	-	-	-	-	-	-	-
	12/1/1989	-	-	-	-	-	-	-	-	-	270	180	180	560	-	-	-	-	-	-	-	-	-	-
	3/1/1990	-	-	-	-	-	-	-	-	-	310	140	140	280	-	-	-	-	-	-	-	-	-	-
	6/1/1990	-	-	-	-	-	-	-	-	-	34	24	110	190	-	-	-	-	-	-	-	-	-	-
	9/1/1990	-	-	-	-	-	-	-	-	-	170	110	140	270	-	-	-	-	-	-	-	-	-	-
	12/1/1990	-	-	-	-	-	-	-	-	-	2100	1300	100	2300	-	-	-	-	-	-	-	-	-	-
	3/1/1991	-	-	-	-	-	-	-	-	-	900	650	250	2000	-	-	-	-	-	-	-	-	-	-
	6/1/1991	-	-	-	-	-	-	-	-	-	1040	700	330	1230	-	-	-	-	-	-	-	-	-	-
	12/1/1992	-	-	-	-	-	-	-	-	-	3300	750	340	1580	-	-	-	-	-	-	-	-	-	-
	3/1/1993	-	-	-	-	-	-	-	-	-	2900	400	<250	1880	-	-	-	-	-	-	-	-	-	-
	12/1/1994	-	-	-	-	-	-	-	-	-	240	22	66	79	-	-	-	-	-	-	-	-	-	-
	3/1/1995	-	-	-	-	-	-	-	-	-	390	55	100	190	-	-	-	-	-	-	-	-	-	-
	9/1/1995	-	-	-	-	-	-	-	-	-	530	93	130	180	-	-	-	-	-	-	-	-	-	-
	12/13/1995	-	85	38	1.2	120	6.5	-	-	1.4	340	79	190	200	-	-	-	15	-	1	-	-	-	-
	7/31/1996	90	130	36	<0.3	150	3.1	-	-	<0.3	150	49	25	84	-	-	-	15	-	<0.3	-	-	<10	-
	12/18/1996	14	270	40	<10	320	<10	23	63	<20	210	19	140	56	12	48	-	<10	44	<10	28	-	<20	-
	1/21/1998	<5	460	67	27	210	<5	14	5.8	<10	210	31	280	63	12	68	<5	9.6	53	<5	17	-	<5	-
	8/19/1998	<5	63	41	71	37	<5	<5	5	<10	72	7.9	53	7.6	<5	14	<5	<5	11	<5	5.3	-	-	-
MW-503B	2/9/1999	<50	<50	110	150	61	<50	<50	<50	<100	970	<50	420	<50	<50	84	<50	<50	50	<50	<50	-	-	-
	7/19/1999	<20	25	180	250	82	<10	<20	<20	<10	630	<20	540	<20	20	130	<20	<20	73	<200	<200	-	<20	-
	1/14/2000	<20	<20	210	200	90	<10	<20	<20	<10	1000	32	870	140	<20	170	<20	<20	83	<200	<200	-	<20	-
	8/4/2000	<10	<10	140	160	36	<5	<10	<10	<5	610	19	500	35	14	100	<10	<10	68	<10	23	-	<10	-
	2/6/2001	<20	<20	84	150	25	<10	<20	<20	<10	250	<20	320	41	<20	130	<20	<20	89	<200	<200	-	<20	-
	7/25/2001	<50	<50	<50	57	<50	<25	<50	<50	<25	280	<50	230	<50	<50	91	<50	<50	62	<500	<500	-	<50	-

TABLE IV
Summary of VOC and Oxygenate Results
Former CENCO Refinery
Santa Fe Springs, CA

Well	Sample Date	PCE	TCE	c1,2-DCE	t1,2-DCE	1,1-DCE	1,2-DCA	1,3,5-TMB	1,2,4-TMB	VC	B	T	E	X	sBUT	nPRO	CBNZ	1,1-DCA	ISO-P	MC	NAP	DIPE	MTBE	TBA
MW-503B	5/9/2002	<2	<2	23	23	5	<1	2.2	2.5	7.7	81	3.5	77	34.5	18	120	<2	<2	86	<20	26	-	<2	<20000
	9/26/2002	<1	<1	18	16	1.1	<0.5	3.7	2.5	10	36	9.6	140	56	18	150	<1	<1	95	<10	48	-	<1	<10000
	7/1/2004	<5	<5	3J	-	<5	<5	4J	3J	<5	160	37	89	42.5	28	200	<5	<5	16	<5	42	-	<5	<100
	10/5/2005	<20	<20	<20	<20	<20	<10	<20	<20	<10	1100	<20	73	38	<20	90	<20	<20	61	<200	<200	<40	<20	<200
	2/14/2006	<50	<50	<50	<50	<50	<50	<50	<50	<50	331	<50	12	<50	18	56	<50	<50	69	<50	<50	<10	<10	<100
	8/4/2006	<2	<2	7.2	3.1	<5	<2	<2	<2	5.8	31	<2	3.5	4.1	18	29	<2	<2	47	<5	<5	<5	7.6	<50
	11/10/2006	<4	<4	4.9	<4	<10	<4	<4	<4	<10	26	<4	4.7	<8	21	83	<4	<4	70	<10	<10	<10	<10	<100
	2/9/2007	<2	<2	11	2.2	<5	<2	<2	<2	5.4	59	<2	<2	<4	17	29	<2	<2	45	<5	<5	<5	<5	<50
	5/11/2007	<2	<2	17	2.6	0.87	0.47	0.61	<2	7.4	60	0.58	2.1	1.3	18	27	<2	0.63	40	<5	1.5	<5	1.3	<50
	8/10/2007	<2	<2	19	2	0.76	0.64	0.44	0.23	7.6	80	0.62	1.7	1.3	23	32	<2	0.48	52	<5	<5	<5	<5	<50
	11/8/2007	<1.3	<1	15	<1.1	<1.7	<1.1	<1	<0.92	7	270	3.6	3.7	4.7	22	33	<1.4	<1.1	44	<3.8	11	<1	2.8	<20
	2/11/2008	<8	<8	21	1.4	<20	<8	<8	<8	6.3	220	3.1	3.4	4	21	35	<8	<8	35	<20	18	<20	3.4	<200
	1/21/2009	<10	<10	<10	<10	<25	<10	<10	<10	25	410	14	39	32	<25	200	<10	<10	110	<25	36	<25	<25	<250
	4/27/2009	<2	<2	4.8	<2	<5	1.2	2.9	0.53	25	210	11	24	21	19	180	<2	<2	100	<5	29	<5	2.2	<50
	3/8/2010	<1.0	<1.0	<1.0	<1.0	<1.0	<0.50	<1.0	<1.0	6.7	40	1.4	1.7	<1.0	12	39	<1.0	<1.0	34	<1.0	<1.0	<2.0	2.9	<10
	5/17/2010	<1.0	<1.0	<1.0	<1.0	<1.0	1.6	<1.0	<1.0	5.7	91	1	1.2	<1.0	12	44	<1.0	<1.0	35	<1.0	1.4	<2.0	5.1	<10
	8/9/2010	<1.0	<1.0	<1.0	<1.0	<1.0	3.8	1.3	<1.0	5.4	270	5.3	2.4	<1.0	17	24	<1.0	<1.0	25	<1.0	3.4	<2.0	<1.0	<10
	11/8/2010	<1.0	<1.0	<1.0	<1.0	<1.0	<0.50	140	370	5.9	690	320	180	750	23	64	<1.0	<1.0	27	<1.0	97	<2.0	8.2	<10
	11/8/2010	<1.0	<1.0	<1.0	<1.0	<1.0	2.7	170	450	6.1	940	440	250	1030	18	74	<1.0	<1.0	35	<1.0	250	<2.0	9.6	<10
	2/4/2011	<1.0	<1.0	2.7	<1.0	<1.0	4.8	4,400	15,000	<1.0	1,400	7,700	2,900	20,900	8	78	<1.0	<1.0	22	<1.0	5,200	<2.0	<1.0	<10
MW-504	12/1/1993	-	-	-	-	-	-	-	-	-	11000	1300	1800	9200	-	-	-	-	-	-	-	-	-	-
	6/1/1994	-	-	-	-	-	-	-	-	-	8600	2100	<500	8100	-	-	-	-	-	-	-	-	-	-
	12/1/1994	-	-	-	-	-	-	-	-	-	5800	700	840	7600	-	-	-	-	-	-	-	-	-	-
	3/1/1995	-	-	-	-	-	-	-	-	-	5200	1100	1200	12000	-	-	-	-	-	-	-	-	-	-
	9/1/1995	-	-	-	-	-	-	-	-	-	8000	1300	2200	11000	-	-	-	-	-	-	-	-	-	-
	12/13/1995	-	-	14	-	-	-	-	-	-	2700	730	800	2600	-	-	-	13	-	-	-	-	-	-
	8/1/1996	<1	0.78	20	0.46	<1	20	-	-	1.1	3400	1400	960	3700	-	-	-	4	-	<1	-	-	370	-
	12/18/1996	<250	<250	<250	<250	<250	<250	2100	5000	<500	6000	2800	1000	3300	<250	350	-	<250	<250	<250	2300	-	<50	-
	1/21/1998	<250	<250	<250	<250	<250	<250	340	800	<500	4600	940	750	2080	<250	<250	<250	<250	<250	<250	360	-	<250	-
	8/20/1998	NS	NS	NS	NS	NS	NS	NS	NS	NS	NS	NS	NS	NS	NS	NS	NS	NS	NS	NS	NS	-	NS	-
	1/28/1999	NS	NS	NS	NS	NS	NS	NS	NS	NS	NS	NS	NS	NS	NS	NS	NS	NS	NS	NS	NS	-	NS	-
	7/19/1999	NS	NS	NS	NS	NS	NS	NS	NS	NS	NS	NS	NS	NS	NS	NS	NS	NS	NS	NS	NS	-	NS	-
	1/10/2000	NS	NS	NS	NS	NS	NS	NS	NS	NS	NS	NS	NS	NS	NS	NS	NS	NS	NS	NS	NS	-	NS	-
	7/31/2000	NS	NS	NS	NS	NS	NS	NS	NS	NS	NS	NS	NS	NS	NS	NS	NS	NS	NS	NS	NS	-	NS	-
	2/6/2001	NS	NS	NS	NS	NS	NS	NS	NS	NS	NS	NS	NS	NS	NS	NS	NS	NS	NS	NS	NS	-	NS	-
	7/24/2001	NS	NS	NS	NS	NS	NS	NS	NS	NS	NS	NS	NS	NS	NS	NS	NS	NS	NS	NS	NS	-	NS	-
	5/6/2002	NS	NS	NS	NS	NS	NS	NS	NS	NS	NS	NS	NS	NS	NS	NS	NS	NS	NS	NS	NS	-	NS	NS
	9/23/2002	NS	NS	NS	NS	NS	NS	NS	NS	NS	NS	NS	NS	NS	NS	NS	NS	NS	NS	NS	NS	-	NS	NS
	2/16/2006	<50	<50	<50	<50	<50	<50	106	152	<50	675	76	262	511	<50	30	<50	<50	38	<50	82	<10	13	<100

TABLE IV
Summary of VOC and Oxygenate Results
Former CENCO Refinery
Santa Fe Springs, CA

Well	Sample Date	PCE	TCE	c1,2-DCE	t1,2-DCE	1,1-DCE	1,2-DCA	1,3,5-TMB	1,2,4-TMB	VC	B	T	E	X	sBUT	nPRO	CBNZ	1,1-DCA	ISO-P	MC	NAP	DIPE	MTBE	TBA
MW-504	8/3/2006	<2	<2	2	<2	<5	3.9	90	98	<5	1500	51	150	490	5.4	28	<2	<2	38	<5	54	<5	9.3	<50
	11/10/2006	<40	<40	<40	<40	<100	<40	98	49	<100	1000	<40	130	260	<100	<40	<40	<40	<40	<100	<100	<100	<100	<1000
	2/9/2007	<2	<2	<2	<2	<5	<2	64	38	<5	140	<2	13	130	<5	6.5	<2	<2	18	<5	49	<5	<5	98
	5/11/2007	<40	<40	<40	<40	<100	<40	110	130	<100	1500	7.2	230	400	10	59	<40	<40	66	<100	80	<100	<100	<1000
	8/10/2007	<20	<20	<20	<20	<50	<20	89	95	<50	1200	6.6	130	350	6.9	43	<20	<20	54	<50	54	<50	5.1	<500
	11/8/2007	<3.2	<2.6	<3.2	<2.7	<4.2	<2.8	100	85	<3	960	7.5	120	270	5.6	30	<3.6	<2.7	44	<9.5	27	<2.5	4.9	<49
	2/8/2008	<20	<20	<20	<20	<50	3.9	110	89	<50	760	7.5	110	240	7.2	45	<20	<20	55	<50	84	<50	6.4	110
MW-600	2/20/1991	-	-	-	-	-	-	-	-	-	18000	9200	1300	9900	-	-	-	-	-	-	-	-	-	-
	12/13/1995	-	-	-	-	-	-	-	-	-	23000	40000	18000	101000	-	-	-	-	-	-	-	-	-	-
	8/1/1996	<1	0.53	3.8	<1	<1	5.5	-	-	<1	14000	15000	3500	20000	-	-	-	0.36	-	<1	-	-	<10	-
	12/19/1996	<500	<500	<500	<500	<500	<500	580	1800	<1000	14000	15000	1800	9100	<500	<500	-	<500	<500	<500	<500	-	<10	-
	1/22/1998	NS	NS	NS	NS	NS	NS	NS	NS	NS	NS	NS	NS	NS	NS	NS	NS	NS	NS	NS	NS	-	NS	-
	8/20/1998	NS	NS	NS	NS	NS	NS	NS	NS	NS	NS	NS	NS	NS	NS	NS	NS	NS	NS	NS	NS	-	NS	-
	1/28/1999	NS	NS	NS	NS	NS	NS	NS	NS	NS	NS	NS	NS	NS	NS	NS	NS	NS	NS	NS	NS	-	NS	-
MW-600A	7/19/1999	NS	NS	NS	NS	NS	NS	NS	NS	NS	NS	NS	NS	NS	NS	NS	NS	NS	NS	NS	NS	-	NS	-
	1/10/2000	NS	NS	NS	NS	NS	NS	NS	NS	NS	NS	NS	NS	NS	NS	NS	NS	NS	NS	NS	NS	-	NS	-
	7/31/2000	NS	NS	NS	NS	NS	NS	NS	NS	NS	NS	NS	NS	NS	NS	NS	NS	NS	NS	NS	NS	-	NS	-
	2/6/2001	NS	NS	NS	NS	NS	NS	NS	NS	NS	NS	NS	NS	NS	NS	NS	NS	NS	NS	NS	NS	-	NS	-
	7/24/2001	NS	NS	NS	NS	NS	NS	NS	NS	NS	NS	NS	NS	NS	NS	NS	NS	NS	NS	NS	NS	-	NS	-
	5/6/2002	NS	NS	NS	NS	NS	NS	NS	NS	NS	NS	NS	NS	NS	NS	NS	NS	NS	NS	NS	NS	-	NS	NS
	9/23/2002	NS	NS	NS	NS	NS	NS	NS	NS	NS	NS	NS	NS	NS	NS	NS	NS	NS	NS	NS	NS	-	NS	NS
MW-601	2/20/1991	-	-	-	-	-	-	-	-	-	12000	4900	1900	11200	-	-	-	-	-	-	-	-	-	-
	12/13/1995	-	-	-	-	-	-	-	-	-	18000	17000	130000	100000	-	-	-	-	-	-	-	-	-	-
	8/1/1996	<1	0.51	4.4	<1	<1	2.9	-	-	1.9	12000	1400	4600	16000	-	-	-	1.4	-	<1	-	-	<10	-
	12/19/1996	<500	<500	<500	<500	<500	<500	<500	1100	<1000	10000	<500	1600	4000	<500	<500	-	<500	<500	<500	<500	-	<10	-
	1/22/1998	NS	NS	NS	NS	NS	NS	NS	NS	NS	NS	NS	NS	NS	NS	NS	NS	NS	NS	NS	NS	-	NS	-
	8/20/1998	NS	NS	NS	NS	NS	NS	NS	NS	NS	NS	NS	NS	NS	NS	NS	NS	NS	NS	NS	NS	-	NS	-
	1/28/1999	NS	NS	NS	NS	NS	NS	NS	NS	NS	NS	NS	NS	NS	NS	NS	NS	NS	NS	NS	NS	-	NS	-
MW-601A	7/19/1999	<5000	<5000	<5000	<5000	<5000	<2500	<5000	<5000	<25000	18000	<5000	<5000	<5000	<5000	<5000	<5000	<5000	<5000	<50000	<50000	-	11000	-
	1/13/2000	<1000	<1000	<1000	<1000	<1000	<1000	<1000	<1000	<500	22000	<1000	<1000	<1000	<1000	<1000	<1000	<500	<1000	<10000	<10000	-	22000	-
	8/3/2000	<200	<200	<200	<200	<200	<100	<200	<200	<100	21000	<200	<200	<200	<200	<200	<200	<200	<200	<200	69	-	5600	-
	2/7/2001	<50	<50	<50	<50	<50	<25	<50	<50	<25	16000	63	97	<50	<50	130	<50	<50	57	<500	<500	-	1200	-
	7/24/2001	<100	<100	<100	<100	<100	<50	<100	<100	<50	15000	<100	110	<100	<100	1.8	<100	<100	<100	<100	<100	-	2800	-
	5/9/2002	<100	<100	<100	<100	<100	<50	<100	<100	<50	12000	<100	<100	<100	<100	170	<100	<100	<100	<1000	<1000	-	3500	NS
	9/26/2002	<100	<100	<100	<100	<100	<50	<100	<100	<50	8000	<100	590	270	<100	200	<100	<100	<100	<1000	<1000	-	4000	NS

TABLE IV
Summary of VOC and Oxygenate Results
Former CENCO Refinery
Santa Fe Springs, CA

Well	Sample Date	PCE	TCE	c1,2-DCE	t1,2-DCE	1,1-DCE	1,2-DCA	1,3,5-TMB	1,2,4-TMB	VC	B	T	E	X	sBUT	nPRO	CBNZ	1,1-DCA	ISO-P	MC	NAP	DIPE	MTBE	TBA
MW-603	12/1/1995	-	-	-	-	-	-	-	-	-	0.98	1.4	0.62	3.3	-	-	-	-	-	-	-	-	-	-
	7/30/1996	53	56	6.4	<0.3	30	9.5	-	-	0.45	0.6	<0.5	1.4	<0.5	-	-	-	3.9	-	<0.3	-	-	2	-
	12/16/1996	37	56	<5	<5	34	<5	<5	<5	<10	<5	<5	<5	<10	<5	<5	-	<5	<5	6	<5	-	<2	-
	1/22/1998	59	89	9	<5	63	<5	<5	<5	<10	<5	<5	<5	<5	<5	<5	<5	5	<5	<5	<10	-	<5	-
	8/19/1998	13	31	<5	<5	14	29	<5	<5	<10	<5	<5	<5	<5	<5	<5	<5	<5	<5	<5	<10	-	-	-
	1/27/1999	25	42	5.3	<5	19	39	<5	<5	<10	<5	<5	<5	<5	<5	<5	<5	<5	<5	<5	<10	-	<5	-
	7/19/1999	37	62	7.4	<1	31	40	<1	<1	<0.5	<0.5	<1	<1	<1	<1	<1	<1	3	<1	<10	<10	-	<1	-
	1/11/2000	56	74	6.4	<1	39	16	<1	<1	<0.5	<0.5	<1	<1	<1	<1	<1	<1	3.6	<1	<10	<1	-	<1	-
	7/31/2000	95	110	9.3	<1	88	7.2	<1	<1	0.71	<0.5	<1	<1	<1	<1	<1	<1	6.7	<1	<10	<1	-	<1	-
	2/7/2001	89	140	11	2.8	120	2.7	<1	<1	0.96	<0.5	<1	<1	<1	<1	<1	<1	8.5	<1	<10	<1	-	<1	-
	7/24/2001	110	210	15	8.3	150	2.9	<1	<1	<0.5	<0.5	<1	<1	<1	<1	<1	<1	10	<1	<10	<1	-	<1	-
	5/7/2002	170	160	9.6	3.4	120	<1	<2	<2	<1	<1	<2	<2	<4	<2	<2	<2	7	<2	<2	<20	-	<2	<20000
	9/24/2002	210	210	14	5.3	210	3.2	<2	<2	1.6	<1	<2	<2	<2	<2	<2	<2	11	<2	<2	<20	-	<2	<20000
	7/1/2004	120	87	12	3J	80	3J	<5	<5	<5	<5	0.3J	<0.5	<1	<5	2J	<5	5.7	<5	<5	2J	-	<5	<100
	10/6/2005	160	150	22	7.3	100	12	<1	<1	1.6	0.82	<1	<1	<1	<1	<1	<1	8	<1	<10	<10	<2	<1	<10
	2/14/2006	103	110	17	3.5	80	28	<5	<5	<5	<1	<5	<5	<5	<5	<5	<5	6	<5	<5	<5	<1	1.7	18
	8/1/2006	150	120	22	3.7	97	8	<2	<2	<5	<2	<2	<2	<4	<5	<2	<2	7.1	<2	<5	<5	<5	<5	<50
	11/7/2006	170	120	21	3.3	110	14	<2	<2	<5	<2	<2	<2	<4	<5	<2	<2	6.3	<2	<5	<5	<5	<5	<50
	2/6/2007	140	92	19	2.7	89	17	<2	<2	<5	<2	<2	<2	<4	<5	<2	<2	6	<2	<5	<5	<5	<5	<50
	8/7/2007	140	110	17	2.6	60	6.4	<2	<2	0.79	0.28	<2	<2	<4	<5	<2	<2	5.5	<2	1.9	<5	<5	<5	<50
	11/5/2007	120	110	16	2.6	72	3.8	<0.26	<0.23	1.2	0.31	<0.36	<0.25	<0.9	<0.25	<0.27	<0.36	5	<0.25	<0.95	<0.41	<0.25	<0.32	<4.9
	2/4/2008	110	110	15	2.5	61	2.2	<2	<2	<5	<2	<2	<2	<4	<5	<2	<2	3.9	<2	<5	<5	<5	<5	<1
	1/13/2009	74	79	17	2.8	48	5.6	<2	<2	<5	<2	<2	<2	<4	<5	<2	<2	4.4	<2	<5	<5	<5	<5	<50
	4/21/2009	90	86	17	2.4	51	2	<2	<2	0.99	<2	<2	<2	<4	<5	<2	<2	3.8	<2	<5	<5	<5	<5	<50
MW-604	12/20/1995	-	-	-	-	-	-	-	-	-	160	3.3	7.8	21	-	-	-	-	-	-	-	-	-	-
	7/30/1996	<0.3	<0.3	0.98	<0.3	<0.3	1.1	-	-	<0.3	73	7.8	<0.5	9	-	-	-	1.7	-	<0.3	-	-	12.4	-
	12/17/1996	<2	<2	<2	<2	<2	<2	<2	<2	<4	47	<2	<2	<4	2.2	3.6	-	<2	5.7	<2	<2	-	<2	-
	1/22/1998	<5	<5	<5	<5	<5	<5	<5	<5	<10	7	<5	<5	<5	<5	<5	-	<5	7	<5	<10	-	<5	-
	8/19/1998	<5	<5	<5	<5	<5	<5	<5	<5	<10	<5	<5	<5	<5	<5	<5	<5	<5	<5	<5	<10	-	-	-
	1/27/1999	<5	<5	<5	<5	<5	<5	<5	<5	<10	25	<5	<5	<5	<5	<5	<5	<5	6.4	<5	<10	-	<5	-
	7/19/1999	<1	<1	4.2	<1	<1	<0.5	<1	<1	<0.5	14	<1	<1	1.3	2.6	1.3	<1	<1	4.9	<10	<10	-	<1	-
	1/11/2000	<1	<1	3.9	<1	<1	0.99	<1	<1	<0.5	21	<1	<1	<1	4.3	8.2	<1	<1	23	<10	<10	-	<1	-
	8/3/2000	<1	<1	8.7	<1	<1	<0.5	<1	<1	-	100	<1	<1	<1	5.6	1.1	<1	<1	19	<10	<10	-	30	-
	2/7/2001	<5	<5	<5	<5	<5	<2.5	<5	<5	6.8	110	<5	<5	<5	<5	25	<5	<5	43	<50	<50	-	31	-
	7/24/2001	<1	<1	<5	<1	<1	<5	<1	<1	<0.5	67	<1	<1	5	5.6	34	<1	<1	48	<1	<10	-	34	-
	5/8/2002	<1	<1	<1	<1	<1	<5	<1	<1	5.3	57	<1	<1	3.3	5.2	34	<1	<1	47	<10	<10	-	48	NS
	9/25/2002	<1	<1	<1	<1	<1	<5	1.3	<1	4.8	36	<1	<1	5.8	6.8	34	<1	<1	49	<10	<10	-	84	NS
	11/8/2006	<2	<2	<2	<2	<5	<2	<2	<2	<5	7.2	<2	<2	<4	<5	<2	<2	<2	<2	<5	<5	<5	15	65
	2/7/2007	<2	<2	<2	<2	<5	<2	<2	<2	<5	9.8	<2	<2	<4	<5	7	<2	<2	10	<5	<5	<5	20	60

TABLE IV
Summary of VOC and Oxygenate Results
Former CENCO Refinery
Santa Fe Springs, CA

Well	Sample Date	PCE	TCE	c1,2-DCE	t1,2-DCE	1,1-DCE	1,2-DCA	1,3,5-TMB	1,2,4-TMB	VC	B	T	E	X	sBUT	nPRO	CBNZ	1,1-DCA	ISO-P	MC	NAP	DIPE	MTBE	TBA
MW-604	5/8/2007	<2	<2	<2	<2	<5	<2	0.26	0.48	0.87	4.4	0.38	<2	1.3	2.7	7.4	<2	<2	13	<5	<5	<5	18	57
	8/7/2007	<2	<2	<2	<2	<5	<2	<2	0.23	<5	1.3	<2	<2	1.2	1.7	5	<2	<2	8.6	<5	<5	<5	18	44
	11/5/2007	<0.32	<0.26	<0.32	<0.27	<0.42	<0.28	<0.26	0.41	0.69	1.2	0.36	<0.25	1.3	2.7	7.9	<0.36	<0.27	13	<0.95	0.55	<0.25	23	50
MW-605	12/20/1995	-	-	-	-	-	-	-	-	-	10	<0.5	<0.5	4.9	-	-	-	-	-	-	-	-	-	-
	7/31/1996	13	18	<0.3	<0.3	4.3	<0.3	-	-	<0.3	<0.5	<0.5	<0.5	<0.5	-	-	-	1.2	-	<0.3	-	-	<20	-
	12/16/1996	11	2000	<1	<1	<1	<1	<1	<1	<2	<1	<1	<1	<2	<1	<1	-	<1	<1	<1	<1	-	<2	-
	1/22/1998	14	32	<5	<5	6	<5	<5	<5	<10	<5	<5	<5	<5	<5	<5	<5	<5	<5	<5	<10	-	<5	-
	8/19/1998	<5	<5	<5	<5	<5	<5	<5	<5	<10	<5	<5	<5	<5	<5	<5	<5	<5	<5	<5	<10	-	-	-
	1/28/1999	<5	<5	<5	<5	<5	<5	<5	<5	<10	<5	<5	<5	<5	<5	<5	<5	<5	<5	<5	<10	-	<5	-
	7/19/1999	1.6	<1	<1	3.2	<1	<0.5	<1	<1	<0.5	<0.5	<1	<1	<1	<1	<1	<1	<1	<1	<10	<10	-	<1	-
	1/11/2000	7	36	<1	<1	3.5	<0.5	<1	<1	<0.5	<0.5	<1	<1	<1	<1	<1	<1	1	<1	<10	<10	-	<1	-
	8/2/2000	22	34	<1	<1	4.6	<0.5	<1	<1	<10	<0.5	<1	<1	<1	<1	<1	<1	1.6	<1	<10	<10	-	<1	-
	2/7/2001	7.1	25	<1	<1	2	<0.5	<1	<1	<0.5	<0.5	<1	<1	<1	<1	<1	<1	<1	<1	<10	<10	-	<1	-
	7/24/2001	26	10	<1	<1	1.7	<0.5	<1	<1	<0.5	<0.5	<1	<1	<1	<1	<1	<1	<1	<1	<10	<10	-	<1	-
	5/7/2002	19	22	<1	<1	1.8	<0.5	<1	<1	<0.5	<0.5	<1	<1	<1	<1	<1	<1	<1	<1	<10	<10	-	<1	<10000
	9/24/2002	13	33	<1	<1	2	<0.5	<1	<1	<0.5	<0.5	<1	<1	<2	<1	<1	<1	<1	<1	<10	<10	-	<1	<10000
	6/30/2004	5J	240	<5	<5	<5	<5	<5	<5	<5	<0.5	<0.5	<0.5	<1	<5	<5	<5	<5	<5	<5	<5	-	<5	<100
	10/5/2005	4.5	20	<1	<1	<1	<0.5	<1	<1	<0.5	<0.5	<1	<1	<1	<1	<1	<1	<1	<1	<10	<10	<2	<1	<10
	2/14/2006	5.3	21	<5	<5	<5	<5	<5	<5	<5	<1	<5	<5	<5	<5	<5	<5	<5	<5	<5	<5	<1	<1	<10
	8/1/2006	9.2	26	<2	<2	<5	<2	<2	<2	<5	<2	<2	<2	<4	<5	<2	<2	<2	<2	<5	<5	<5	<5	<50
	11/7/2006	21	29	<2	<2	<5	<2	<2	<2	<5	<2	<2	<2	<4	<5	<2	<2	<2	<2	<5	<5	<5	<5	<50
	2/6/2007	35	35	<2	<2	<5	<2	<2	<2	<5	<2	<2	<2	<4	<5	<2	<2	<2	<2	<5	<5	<5	<5	<50
	5/8/2007	45	35	1.6	<2	3.7	<2	<2	<2	<5	<2	<2	<2	<4	<5	<2	<2	0.74	<2	<5	<5	<5	<5	<50
	8/7/2007	37	33	1.2	<2	3	<2	<2	<2	<5	<2	<2	<2	<4	<5	<2	<2	0.77	<2	<5	<5	<5	<5	<50
	11/5/2007	20	20	0.84	<0.27	2.6	<0.28	<0.26	<0.23	<0.3	<0.28	<0.36	<0.25	<0.9	<0.25	<0.27	<0.36	0.53	<0.25	<0.95	<0.41	<0.25	<0.32	<4.9
	2/4/2008	21	21	1.1	<2	4	<2	<2	<2	<5	<2	<2	<2	<4	<5	<2	<2	0.67	<2	<5	<5	<5	<5	<50
MW-606	12/19/1995	-	-	-	-	-	-	-	-	-	<0.5	<0.5	<0.5	<0.5	-	-	-	-	-	-	-	-	-	-
	7/31/1996	<0.3	<0.3	<0.3	<0.3	<0.3	0.96	-	-	<0.3	<0.5	<0.5	<0.5	<0.5	-	-	-	<0.3	-	<0.3	-	-	<20	-
	12/16/1996	<1	<1	<1	<1	<1	<1	<1	<1	<2	<1	<1	<1	<2	<1	<1	-	<1	<1	<1	<1	-	<2	-
	1/22/1998	<5	<5	<5	<5	<5	<5	<5	<5	<10	<5	<5	<5	<5	<5	<5	<5	<5	<5	<5	<10	-	<5	-
	8/19/1998	<5	<5	<5	<5	<5	<5	<5	<5	<10	<5	<5	<5	<5	<5	<5	<5	<5	<5	<5	<10	-	-	-
	1/28/1999	<5	<5	<5	<5	<5	<5	<5	<5	<10	<5	<5	<5	<5	<5	<5	<5	<5	<5	<5	<10	-	<5	-
	7/19/1999	<1	<1	<1	<1	<1	<0.5	<1	<1	<0.5	<0.5	<1	<1	<1	<1	<1	<1	<1	<1	<10	<10	-	<1	-
	1/11/2000	<1	<1	<1	<1	<1	<0.5	<1	<1	<0.5	<0.5	<1	<1	<1	<1	<1	<1	<1	<1	<10	<10	-	1.2	-
	8/2/2000	<1	<1	<1	<1	<1	<0.5	<1	<1	<0.5	<0.5	<1	<1	<1	<1	<1	<1	<1	<1	<10	<10	-	-	-
	2/7/2001	<1	<1	<1	<1	<1	<0.5	<1	<1	<0.5	<0.5	<1	<1	<1	<1	<1	<5	<1	<1	<10	<10	-	<1	-
	7/24/2001	<1	<1	<1	<1	<1	<0.5	<1	<1	<0.5	<0.5	<1	<1	<1	<1	<1	<1	<1	<1	<10	<10	-	-	-
	5/7/2002	<1	<1	<1	<1	<1	<0.5	<1	<1	<0.5	<0.5	<1	<1	<1	<1	<1	<1	<1	<1	<10	<10	-	<100	<10000

TABLE IV
Summary of VOC and Oxygenate Results
Former CENCO Refinery
Santa Fe Springs, CA

Well	Sample Date	PCE	TCE	c1,2-DCE	t1,2-DCE	1,1-DCE	1,2-DCA	1,3,5-TMB	1,2,4-TMB	VC	B	T	E	X	sBUT	nPRO	CBNZ	1,1-DCA	ISO-P	MC	NAP	DIPE	MTBE	TBA
MW-606	9/24/2002	<1	<1	<1	<1	<1	<0.5	<1	<1	<0.5	<0.5	<1	<1	<2	<1	<1	<1	<1	<1	<10	<10	-	<100	<10000
	6/30/2004	<5	<5	<5	<5	<5	<5	<5	<5	<5	<0.5	<0.5	<0.5	<1	<5	<5	<5	<5	<5	<5	<5	-	3J	<100
	10/5/2005	<1	<1	<1	<1	<1	<0.5	<1	<1	3.2	5.6	<1	<1	<1	<1	<1	<1	<1	<1	<10	<10	<2	4.8	42
	2/14/2006	<5	<5	<5	<5	<5	<5	<5	<5	<5	<1	<5	<5	<5	<5	<5	<5	<5	<5	<5	<5	<1	<1	<10
	8/1/2006	<2	<2	<2	<2	<5	<2	<2	<2	<5	<2	<2	<2	<4	<5	<2	<2	<2	<2	<5	<5	<5	<5	<50
	11/7/2006	<2	<2	<2	<2	<5	<2	<2	<2	<5	<2	<2	<2	<4	<5	<2	<2	<2	<2	<5	<5	<5	<5	<50
	2/6/2007	<2	<2	<2	<2	<5	<2	<2	<2	<5	<2	<2	<2	<4	<1	<2	<2	<2	<1	<5	<5	<5	<5	<50
	5/8/2007	<2	<2	<2	<2	<5	<2	<2	<2	<5	<2	<2	<2	<4	<5	<2	<2	<2	<2	<5	<5	<5	<5	<50
	8/7/2007	<2	<2	<2	<2	<5	<2	<2	<2	<5	<2	<2	<2	<4	<5	<2	<2	<2	<2	<5	<5	<5	0.9	<50
	11/5/2007	<0.32	<0.26	<0.32	<0.27	<0.42	<0.28	<0.26	<0.23	<0.3	<0.28	<0.36	<0.25	<0.9	<0.25	<0.27	<0.36	<0.27	<0.25	<0.95	<0.41	<0.25	0.32	<4.9
	2/4/2008	<2	<2	<2	<2	<5	<2	<2	<2	<5	<2	<2	<2	<4	<5	<2	<2	<2	<2	<5	<5	<5	<5	<50
	1/13/2009	<2	<2	<2	<2	<5	<2	<2	<2	<5	<2	<2	<2	<4	<5	<2	<2	<2	<2	<5	<5	<5	<5	<50
	4/21/2009	<2	<2	<2	<2	<5	<2	<2	<2	<5	<2	<2	<2	<4	<5	<2	<2	<2	<2	<5	<5	<5	<5	<50
MW-607	12/19/1995	-	-	-	-	-	-	-	-	-	33	35	1.7	9.4	-	-	-	-	-	-	-	-	-	-
	7/31/1996	<0.3	<0.3	<0.3	<0.3	<0.3	<0.3	-	-	1.1	19	5	2.8	8	-	-	-	0.68	-	<0.3	-	-	12	-
	12/17/1996	<1	<1	<1	<1	<1	<1	1.7	<1	<2	21	<1	<1	<2	3.6	27	-	<1	18	<1	2	-	<2	-
	1/22/1998	<25	<25	<25	<25	<25	220	<25	<25	<50	220	<25	<25	<25	<25	29	<25	<25	<25	<25	<50	-	400	-
	8/19/1998	<5	<5	<5	<5	<5	<5	<5	<5	<10	17	<5	<5	<5	<5	<5	<5	<5	<5	<5	<10	-	12	-
	1/27/1999	<5	<5	<5	<5	<5	<5	<5	<5	<10	220	<5	<5	<5	<5	25	<5	<5	15	<5	<10	-	6.2	-
	7/19/1999	<5	<5	<5	<5	<5	<2.5	<5	<5	<2.5	260	<5	<5	<5	5.2	20	<5	<5	13	<50	<50	-	<5	-
	1/11/2000	<2	<2	<2	<2	<2	<1	<2	<2	<1	170	<2	<2	<2	3.3	7.3	<2	<2	8.6	<20	<20	-	4.5	-
	7/31/2000	<2	<2	<2	<2	<2	<1	<2	<2	1.1	110	<2	<2	<2	4.1	3.8	<2	<2	7.3	<20	<10	-	6.2	-
	2/7/2001	<1	<1	1.1	<1	<1	<0.5	<1	<1	0.55	12	<1	<1	<1	2.5	1.3	<1	<1	3.5	<10	<10	-	<1	-
	7/24/2001	<1	<1	1.4	<1	<1	<0.5	<1	<1	<0.5	13	<1	<1	<1	3.3	2.4	<1	<1	5.3	<10	<10	-	<1	-
	5/7/2002	<1	<1	1.7	<1	<1	<0.5	<3	<1	<0.5	5.4	<1	<1	<1	3.7	<1	<1	<1	3.6	<10	<10	-	<1	91000
	9/24/2002	<1	<1	2	<1	<1	<0.5	<3	<1	<0.5	<0.5	<1	<1	<2	3.6	<1	<1	<1	1.8	<10	<10	-	4.2	76000
	6/30/2004	<5	<5	<5	<5	<5	<5	3J	<5	3J	10	<0.5	<0.5	1.9	5J	19	<5	<5	19	<5	<5	-	4J	50J
	10/5/2005	<1	<1	<1	<1	<1	<0.5	<1	<1	1.2	1.2	<1	<1	<1	2.7	12	<1	<1	9.1	<10	<10	<2	1.7	74
	2/14/2006	<5	<5	<5	<5	<5	<5	<5	<5	1	<1	<5	<5	<5	2.6	11	<5	<5	8	<5	<5	<1	2.1	57
	8/1/2006	<2	<2	<2	<2	<5	<2	<2	<2	<5	<2	<2	<2	<4	<5	<2	<2	<2	6.6	<5	<5	<5	<5	120
	11/7/2006	<2	<2	<2	<2	<5	<2	<2	<2	<5	<2	<2	<2	<4	<5	<2	<2	<2	<2	<5	<5	<5	<5	77
	2/6/2007	<2	<2	<2	<2	<5	<2	<2	<2	<5	<2	<2	<2	<4	<5	13	<2	<2	6.8	<5	<5	<5	<5	130
	5/8/2007	<2	<2	<2	<2	<5	<2	<2	<2	<5	<2	<2	<2	<4	1.4	1.9	<2	<2	3.2	<5	<5	<5	2.3	110
	8/7/2007	<2	<2	<2	<2	<5	0.53	<2	<2	1.2	0.5	<2	<2	<4	3.4	6.7	<2	0.33	7.8	<5	<5	<5	4	120
	11/5/2007	<0.32	<0.26	<0.32	<0.27	<0.42	0.38	<0.26	<0.23	0.99	0.5	<0.36	<0.25	<0.9	3.6	15	<0.36	0.29	9.6	<0.95	<0.41	<0.25	3.1	140
	2/4/2008	<2	<2	<2	<2	<5	0.53	<2	0.45	1.3	<2	<2	<2	<4	6.3	34	<2	0.4	19	<5	2.8	<5	5.6	230
W-1	9/1/1989	<1	<1	1.2	<1	<1	<0.5	<1	<1	13	46	<1	<1	<1	3.9	24	<1	1.5	21	<10	<10	-	2.7	-
	11/1/1989	<0.5A	<0.5A	-	<0.5A	<0.6A	<0.5A	-	-	21	390	3.9	2.1	6.4	-	-	<0.5	0.12847	-	<0.5A	-	-	-	-

TABLE IV
Summary of VOC and Oxygenate Results
Former CENCO Refinery
Santa Fe Springs, CA

Well	Sample Date	PCE	TCE	c1,2-DCE	t1,2-DCE	1,1-DCE	1,2-DCA	1,3,5-TMB	1,2,4-TMB	VC	B	T	E	X	sBUT	nPRO	CBNZ	1,1-DCA	ISO-P	MC	NAP	DIPE	MTBE	TBA
W-1	3/1/1990	<5	<5	-	<10	<5	<5	-	-	<20	140	<5	<5	<20	-	-	<10	<5	-	<20	-	-	-	-
	4/1/1990	<5	<5	<25	<5	<5	<5	-	-	<5	200	12	12	2.7	-	-	<5	1.6	-	<5	-	-	-	-
	12/18/1996	<5	<5	<5	<5	<5	<5	<5	<5	<10	78	<5	<5	<10	<5	31	-	<5	27	<5	10	-	<10	-
	1/14/1998	<5	<5	<5	<5	<5	<5	<5	<5	16	62	<5	<5	<5	<5	20	<5	<5	19	<5	<10	-	<5	-
	8/20/1998	<5	<5	8.6	<5	<5	<5	<5	<5	26	79	<5	<5	<5	5	30	<5	8.4	27	<5	<10	-	14	-
	1/29/1999	<5	<5	<5	<5	<5	<5	<5	<5	18	57	<5	<5	<5	<5	28	<5	<5	24	<5	<10	-	<5	-
	7/19/1999	<2	<2	<2	<2	<2	<1	<2	<2	<1	48	<2	<2	<2	4.4	23	<2	<2	19	<20	<20	-	<2	-
	8/3/2000	<1	<1	1.6	<1	<1	<0.5	<1	<1	7.3	29	<1	<1	<1	3.2	18	<1	1.6	18	<10	<10	-	10	-
	2/8/2001	<1	<1	2.3	<1	<1	<0.5	<1	<1	6.3	21	<1	<1	<1	1.8	5.9	<1	<1	5.6	<10	<10	-	68	-
	7/26/2001	<1	<1	2.8	<1	<1	<0.5	<1	<1	6.8	18	<1	<1	<1	2.2	7.7	<1	1.8	10	<10	<10	-	62	-
	5/8/2002	<1	<1	3.1	<1	<1	<0.5	<1	<1	6.4	7.7	<1	<1	<1	<1	2.4	<1	<1	3.3	<10	<10	-	5.9	44000
	9/25/2002	<1	<1	6.5	<1	<1	<0.5	<1	<1	14	12	<1	<1	<2	1	2.7	<1	<1	5.1	<10	<10	-	1.9	30000
	7/1/2004	<5	<5	9.3	4J	<5	<5	<5	<5	2	14	2.8	1.5	<1	1J	-	<5	1J	<5	<5	<5	-	3J	<100
	10/6/2005	<1	<1	<1	1.6	<1	<0.5	<1	<1	7.1	43	<1	<1	<1	<1	<1	<1	<1	4.4	<10	<10	<2	25	34
	2/15/2006	<5	<5	<5	1.3	<5	<5	<5	<5	3.3	32	<5	<5	<5	<5	<5	<5	<5	4.3	<5	<5	<1	22	37
	8/3/2006	<2	<2	<2	<2	<5	<2	<2	<2	<5	86	<2	<2	<4	<5	8.7	<2	<2	18	<5	<5	<5	77	100
	11/9/2006	<2	<2	<2	<2	<5	<2	<2	<2	<5	100	<2	<2	<4	<5	11	<2	<2	16	<5	<5	<5	65	78
	2/8/2007	<2	<2	<2	<2	<5	<2	<2	<2	<5	77	<2	<2	<4	<5	9.4	<2	<2	18	<5	<5	<5	21	<50
	5/10/2007	<2	<2	<2	0.42	<5	<2	<2	<2	1.8	110	0.57	0.61	<4	3.4	16	<2	<2	21	<5	1	<5	28	43
	8/9/2007	<2	<2	<2	0.47	<5	<2	<2	<2	1.9	140	0.84	0.84	1.2	5.4	30	<2	0.32	33	<5	1.1	0.25	64	84
	11/7/2007	<0.32	<0.26	<0.32	0.7	<0.42	<0.28	2.1	0.38	1.2	140	1.6	1.2	1.6	5.8	37	<0.36	<0.27	35	<0.95	1.6	0.25	56	80
	2/7/2008	<2	<2	<2	<2	<5	<2	<2	<2	<5	96	<2	<2	<4	5	24	<2	<2	25	<5	<5	<5	31	51
	1/20/2009	<2	<2	0.4	1.1	<5	<2	<2	<2	3.7	19	<2	<2	<4	1.1	2.5	0.49	0.61	4.8	<5	<5	0.49	3.9	35
	4/24/2009	<2	<2	<2	1.4	<5	<2	<2	<2	9.5	3.9	<2	<2	<4	0.48	0.71	0.44	0.74	1.8	<5	<5	0.42	<5	26
	3/5/2010	<1.0	<1.0	<1.0	<1.0	<1.0	<0.50	<1.0	<1.0	1.3	3.3	<0.50	<0.50	<1.0	<1.0	1	<1.0	<1.0	2.5	<1.0	<1.0	<2.0	<1.0	<10
	5/13/2010	<1.0	<1.0	<1.0	<1.0	<1.0	<0.50	<1.0	<1.0	1.2	9.3	<0.50	<0.50	<1.0	<1.0	2.1	<1.0	<1.0	4.9	<1.0	<1.0	<2.0	<1.0	<10
	8/6/2010	<1.0	<1.0	<1.0	<1.0	<1.0	<0.50	<1.0	<1.0	<1.0	17	<0.50	<0.50	<1.0	<1.0	1.8	<1.0	<1.0	4.2	<1.0	<1.0	<2.0	<1.0	<10
	11/5/2010	<1.0	<1.0	<1.0	<1.0	<1.0	<0.50	<1.0	<1.0	<1.0	15	<0.50	<0.50	<1.0	<1.0	1	<1.0	<1.0	2.8	<1.0	<1.0	<2.0	<1.0	<10
	2/4/2011	<1.0	<1.0	<1.0	<1.0	<1.0	<0.50	<1.0	<1.0	<1.0	2.7	<0.50	<0.50	<1.0	<1.0	<1.0	<1.0	<1.0	1.9	<1.0	<1.0	<2.0	<1.0	<10
W-2	11/1/1989	<0.5A	<0.5A	-	<0.5A	<0.5A	<0.5A	-	-	75A	78	6.5	6.5	5	-	-	<0.5	0.16875	-	<0.5A	-	-	-	-
	3/1/1990	<0.5	<0.5	-	<1	<0.5	<0.5	-	-	<2	62	<0.5	<0.5	<2	-	-	<1	<0.5	-	<2	-	-	-	-
	4/1/1990	<2.5	<2.5	13	<5	<2.5	<2.5	-	-	5.9	83	26	4	1.5	-	-	<1	3	-	<5	-	-	-	-
	12/18/1996	<2	<2	13	<2	<2	<2	<2	<2	11	56	<2	<2	<4	<2	12	-	<2	18	<2	<2	-	<2	-
	1/14/1998	<5	<5	17	<5	<5	<5	<5	<5	27	85	<5	<5	<5	<5	6	<5	<5	15	<5	<10	-	<5	-
	8/20/1998	NS	NS	NS	NS	NS	NS	NS	NS	NS	NS	NS	NS	NS	NS	NS	NS	NS	NS	NS	NS	-	NS	-
W-3	11/1/1989	<0.5	<0.5	-	<0.5	<0.5	<0.5	-	-	0.292	19	2.6	7.6	13	-	-	<0.5	0.08681	-	<0.5	-	-	-	-
	1/1/1990	<0.5	<0.5	-	<1	<0.5	<0.5	-	-	<2	<0.5	<0.5	<0.5	3.3	-	-	<1	1	-	<2	-	-	-	-
	3/1/1990	<0.5	<0.5	-	<1	<0.5	<0.5	-	-	<2	5.3	4.5	<0.5	<2	-	-	<1	0.5	-	<2	-	-	-	-

TABLE IV
Summary of VOC and Oxygenate Results
Former CENCO Refinery
Santa Fe Springs, CA

Well	Sample Date	PCE	TCE	c1,2-DCE	t1,2-DCE	1,1-DCE	1,2-DCA	1,3,5-TMB	1,2,4-TMB	VC	B	T	E	X	sBUT	nPRO	CBNZ	1,1-DCA	ISO-P	MC	NAP	DIPE	MTBE	TBA
W-3	4/1/1990	<0.5	<0.5	<5	<1	<0.5	<0.5	-	-	<2	3.4	4.5	<1	<1	-	-	<1	<0.5	-	<2	-	-	-	-
	12/18/1996	<25	<25	<25	<25	<25	<25	<25	<25	<50	590	<25	<25	<50	<25	<25	-	<25	<25	<25	<25	-	<10	-
	1/13/1998	<5	<5	<5	<5	<5	<5	<5	<5	51	280	<5	<5	<5	6	16	<5	6	27	<5	<10	-	<5	-
	8/20/1998	NS	NS	NS	NS	NS	NS	NS	NS	NS	NS	NS	NS	NS	NS	NS	NS	NS	NS	NS	NS	-	NS	-
W-3A	1/13/1998	-	-	-	-	-	-	-	-	-	150000	<6000	35000	<12000	-	-	-	-	-	-	-	-	<200000	-
	8/20/1998	<25	<25	<25	<25	<25	<25	<25	<25	<50	220	<25	33	<25	<25	<25	<25	<25	<25	<25	350	-	440	-
	1/28/1999	<50	<50	<50	<50	<50	<50	<50	<50	<100	160	<50	<50	<50	<50	<50	<50	<50	<50	<50	240	-	340	-
	7/19/1999	<20	<20	<20	<20	<20	<10	<20	37	<10	120	<20	<20	<20	<20	26	<20	<20	21	<200	<200	-	380	-
	1/13/2000	<10	<10	<10	<10	<10	<5	<10	<10	7	140	<10	<10	<10	<10	<10	<10	<10	<10	<100	<100	-	210	-
	8/4/2000	<2	<2	<20	<2	<20	<1	2	2	5	170	<20	8.4	<20	7.3	21	<2	<20	14	<20	<50	-	220	-
	2/8/2001	<1	<1	<1	<1	<1	<0.5	4.4	13	1.7	34	<1	2.9	3.1	3.6	12	<1	<1	11	<10	63	-	12	-
	7/26/2001	<1	<1	<1	<1	<1	<0.5	<1	15	27	42	<1	1.7	<10	7.5	24	<1	<1	21	<10	11	-	6.2	-
	5/6/2002	NS	NS	NS	NS	NS	NS	NS	NS	NS	NS	NS	NS	NS	NS	NS	NS	NS	NS	NS	NS	-	NS	NS
	9/25/2002	NS	NS	NS	NS	NS	NS	NS	NS	NS	NS	NS	NS	NS	NS	NS	NS	NS	NS	NS	NS	-	NS	NS
	2/16/2006	<5	<5	<5	<5	<5	<5	16	18	<5	<1	<5	<5	<5	23	27	<5	<5	19	<5	<5	<1	6.2	16
	8/3/2006	<2	<2	<2	<2	<5	<2	<2	<2	<5	<2	<2	<2	<4	13	25	<2	<2	19	<5	38	<5	9	<50
	11/9/2006	<2	<2	<2	<2	<5	<2	9.5	6.4	<5	<2	<2	<2	<4	15	26	<2	<2	12	<5	37	<5	11	<50
	2/8/2007	<2	<2	<2	<2	<5	<2	6.1	3.9	<5	<2	<2	<2	<4	6.7	14	<2	<2	11	<5	30	<5	8.4	<50
	5/10/2007	<2	<2	<2	<2	<5	<2	3.6	2.3	<5	0.66	<2	<2	<4	6.1	15	<2	<2	12	<5	16	<5	7.8	23
	8/9/2007	<2	<2	<2	<2	<5	<2	2.3	2	<5	0.79	<2	<2	<4	5.8	17	<2	<2	14	<5	14	<5	9.8	26
	11/7/2007	<0.32	<0.26	<0.32	<0.27	<0.42	<0.28	0.67	0.64	<0.3	0.62	<0.36	<0.25	<0.9	5.2	17	<0.36	<0.27	12	<0.95	<0.41	<0.25	9.7	26
	2/7/2008	<2	<2	<2	<2	<5	<2	<2	<2	<5	<2	<2	<2	<4	6.2	19	<2	<2	13	<5	<5	<5	10	<50
W-4	3/1/1990	<0.5	<0.5	3.2	<0.5	<0.5	<0.5	-	-	<0.5	120	<0.5	19	<0.5	-	-	<0.5	8.3	-	<0.5	-	-	-	-
	4/1/1990	<1	<1	0.81	<1	<1	<1	-	-	4.3	28	1.4	4.8	2.2	-	-	<1	2.2	-	<2	-	-	-	-
	12/18/1996	<5	<5	<5	<5	<5	<5	<5	<5	<10	80	<5	<5	<10	<5	18	-	<5	19	<5	<5	-	<10	-
	1/14/1998	<5	<5	<5	<5	<5	<5	<5	<5	16	120	<5	<5	<5	<5	27	<5	<5	28	<5	<10	-	<5	-
	8/20/1998	<5	<5	<5	<5	<5	<5	<5	<5	9.8	57	<5	<5	<5	<5	25	<5	<5	26	<5	<10	-	18	-
	1/29/1999	<5	<5	<5	<5	<5	<5	<5	<5	11	55	<5	<5	<5	<5	16	<5	<5	18	<5	<10	-	20	-
	7/19/1999	<2	<2	<2	<2	<2	<1	<2	<2	<1	72	<2	<2	<2	2.7	15	<2	<2	14	<20	<20	-	<2	-
	1/13/2000	<1	<10	1.3	<1	<1	<0.5	<1	<1	13	49	<1	<1	<1	1.4	1.6	<1	<1	2.8	<10	<10	-	<1	-
	8/3/2000	<1	<10	<1	1.2	<1	<0.5	<1	<1	12	47	<1	<1	<1	1.5	2.3	<1	<1	8.8	<10	<10	-	-	-
	2/8/2001	<1	<1	<1	<1	<1	0.67	<1	<1	7	42	<1	<1	<1	1.1	3	<1	1.1	7.5	<10	<10	-	<1	-
	7/26/2001	<1	<1	<1	<1	<1	<0.5	<1	<1	<0.5	42	<1	<1	<1	1.7	5.7	<1	1	8.3	<10	<10	-	<1	-
	5/8/2002	<1	<1	<1	2	<1	<0.5	<1	<1	5.2	33	<1	<1	<1	1.4	2.3	<1	1.3	4.5	<10	<10	-	<1	60000
	9/25/2002	<1	<1	<1	3.8	<1	<0.5	<1	<1	<0.5	62	<1	<1	<2	2.3	4.9	<1	2	8	<10	<1	-	<1	45000
	7/1/2004	<5	<5	3J	1J	<5	<5	<5	<5	11	30	2.6	1.9	1.16	1J	3J	<5	2J	4	<5	<5	-	<5	<100
	10/6/2005	<1	<1	6.4	<1	<1	<0.5	<1	<1	1.3	31	<1	<1	<1	1.1	4.2	<1	1.7	5.9	<10	<10	<2	<1	47
	2/15/2006	<5	<5	2.8	<5	<5	<5	<5	<5	2.4	43	<5	<5	<5	2	7.5	<5	2.5	12	<5	<5	<1	<1	38

TABLE IV
Summary of VOC and Oxygenate Results
Former CENCO Refinery
Santa Fe Springs, CA

Well	Sample Date	PCE	TCE	c1,2-DCE	t1,2-DCE	1,1-DCE	1,2-DCA	1,3,5-TMB	1,2,4-TMB	VC	B	T	E	X	sBUT	nPRO	CBNZ	1,1-DCA	ISO-P	MC	NAP	DIPE	MTBE	TBA
W-4	8/3/2006	<2	<2	4.5	<2	<5	<2	<2	<2	<5	3.5	<2	<2	<4	<5	<2	<2	<2	2.5	<5	<5	<5	<5	<50
	11/9/2006	<2	<2	5.1	<2	<5	<2	<2	<2	<5	6.1	<2	<2	<4	<5	3.2	<2	<2	4.2	<5	<5	<5	<5	<50
	2/8/2007	<2	<2	4.7	<2	<5	<2	<2	<2	<5	3.1	<2	<2	<4	<5	2.8	<2	<2	3.7	<5	<5	<5	<5	<50
	5/10/2007	<2	<2	3.8	<2	<5	<2	<2	<2	1	1.5	<2	<2	<4	1.3	3.9	<2	<2	5.2	<5	<5	<5	1.6	30
	8/9/2007	<2	<2	3.2	<2	<5	<2	<2	<2	0.59	1	<2	<2	<4	2.9	6.6	<2	<2	8.7	<5	<5	<5	2	18
	11/7/2007	<0.32	<0.26	3.6	<0.27	<0.42	<0.28	<0.26	<0.23	<0.3	1.9	<0.36	<0.25	<0.9	2.1	1.6	<0.36	0.36	5.6	<0.95	<0.41	<0.25	1.4	22
	2/7/2008	<2	<2	4.4	<2	<5	<2	<2	<2	<5	4.4	<2	<2	<4	<5	7.1	<2	<2	9	<5	<5	<5	<5	55
	1/19/2009	<2	<2	7.6	<2	<1	<2	<2	<2	1.8	0.51	<2	<2	<4	1.4	2.8	<2	1	5.6	<5	0.43	0.41	<5	47
	4/27/2009	<2	<2	7.3	<2	<5	<2	<2	<2	1.9	<2	<2	<2	<4	0.55	1.1	<2	0.61	2.3	<5	<5	0.32	<5	34
	3/5/2010	<1.0	<1.0	3.7	<1.0	<1.0	<0.50	<1.0	<1.0	7.4	1.5	<0.50	<0.50	<1.0	1.6	11	<1.0	<1.0	13	<1.0	<1.0	<2.0	<1.0	<10
	5/13/2010	<1.0	<1.0	3.1	<1.0	<1.0	<0.50	<1.0	<1.0	5.4	4.3	<0.50	<0.50	<1.0	1.3	10	<1.0	<1.0	12	<1.0	<1.0	<2.0	<1.0	<10
	8/6/2010	<1.0	<1.0	4	<1.0	<1.0	<0.50	<1.0	<1.0	7.2	68	<0.50	<0.50	<1.0	1.6	10	<1.0	<1.0	16	<1.0	<1.0	<2.0	<1.0	<10
	11/4/2010	<1.0	<1.0	<1.0	<1.0	<1.0	<0.50	<1.0	<1.0	4.8	180	<0.50	<0.50	<1.0	1.6	12	<1.0	<1.0	17	<1.0	<1.0	<2.0	<1.0	<10
	2/8/2011	<1.0	<1.0	1	<1.0	<1.0	<0.50	<1.0	<1.0	8.6	480	<0.50	1.2	<1.0	2.3	10	<1.0	<1.0	21	<1.0	<1.0	<2.0	<1.0	<10
W-7	8/4/2000	<1	<1	<0.5	<1	<1	<1	<1	<1	<0.5	<0.5	<1	<1	<1	<1	<10	<1	1.2	<1	<10	<1	-	<1	-
	2/8/2001	<1	<1	<1	<1	<1	<0.5	<1	<1	<0.5	<0.5	<1	<1	<1	<1	<1	<1	<1	<1	<10	<10	-	<1	-
	7/26/2001	<1	<1	<1	<1	<1	<0.5	<1	<1	<0.5	<0.5	<1	<1	<1	<1	<1	<1	<1	<1	<10	<10	-	<1	-
	5/7/2002	<1	<1	<1	<1	<1	<0.5	<1	<1	<0.5	<0.5	<1	<1	<1	<1	<1	<1	<1	<1	<10	<10	-	<1	<10000
	9/24/2002	<1	<1	<1	<1	<1	<0.5	<1	<1	<0.5	<0.5	<1	<1	<1	<1	<1	<1	<1	<1	<10	<10	-	<1	<10000
	10/7/2005	<1	<1	<1	<1	<1	<0.5	<1	<1	<0.5	<0.5	<1	<1	<1	<1	<1	<1	<1	<1	<10	<10	<2	<1	<10
	2/16/2006	<5	<5	<5	<5	<5	<5	<5	1.1	<5	<1	<5	<5	<5	<5	<5	<5	<5	<5	<5	<5	<1	<1	<10
	8/4/2006	<2	<2	<2	<2	<5	<2	<2	<2	<5	<2	<2	<2	<4	<5	<2	<2	<2	<2	<5	<5	<5	<5	<50
	11/10/2006	<2	<2	<2	<2	<5	<2	<2	<2	<5	<2	<2	<2	<4	<5	<2	<2	<2	<2	<5	<5	<5	<5	<50
	2/9/2007	<2	<2	<2	<2	<5	<2	<2	2.2	<5	<2	<2	<2	<4	<5	<2	<2	<2	<2	<5	<5	<5	<5	<50
	5/8/2007	<2	<2	<2	<2	<5	<2	0.35	1.4	<5	0.41	0.45	0.87	2.2	<5	<2	<2	0.41	<2	<5	0.9	<5	<5	<50
	8/10/2007	<2	<2	<2	<2	<5	<2	<2	<2	<5	<2	<2	0.25	<4	<5	<2	<2	<2	<2	<5	<5	<5	<5	<50
	11/6/2007	<0.32	<0.26	<0.32	<0.27	<0.42	<0.28	<0.26	<0.23	<0.3	<0.28	<0.36	<0.25	<0.9	<0.25	<0.27	<0.36	<0.27	<0.25	<0.95	<0.41	<0.25	<0.32	<4.9
	2/4/2008	<2	<2	<2	<2	<5	<2	<2	<2	<5	<2	<2	<2	<4	<5	<2	<2	<2	<2	<5	<5	<5	<5	<50
	1/13/2009	<2	<2	<2	<2	<5	<2	<2	<2	<5	<2	<2	<2	<4	<5	<2	<2	<2	<2	<5	<5	<5	<5	<50
	4/21/2009	<2	<2	<2	<2	<5	<2	<2	<2	<5	0.31	<2	<2	<4	<5	<2	<2	1.7	<2	<5	<5	<5	<5	<50
	3/4/2010	<1.0	<1.0	<1.0	<1.0	<1.0	<0.50	<1.0	<1.0	<1.0	<0.50	<0.50	<0.50	-	<1.0	<1.0	<1.0	2	<1.0	<1.0	<1.0	-	<1.0	<10
	5/17/2010	<1.0	<1.0	<1.0	<1.0	<1.0	<0.50	<1.0	<1.0	<1.0	<0.50	<0.50	<0.50	-	<1.0	<1.0	<1.0	1.9	<1.0	<1.0	2.3	-	<1.0	<10
	8/4/2010	<1.0	<1.0	<1.0	<1.0	<1.0	<0.50	<1.0	<1.0	<1.0	<0.50	<0.50	<0.50	-	<1.0	<1.0	<1.0	2.6	<1.0	<1.0	<1.0	-	<1.0	<10
	11/3/2010	<1.0	<1.0	<1.0	<1.0	<1.0	<0.50	<1.0	<1.0	<1.0	<0.50	<0.50	<0.50	<1.0	<1.0	<1.0	<1.0	2.5	<1.0	<1.0	<1.0	<2.0	<1.0	<10
	2/2/2011	<1.0	<1.0	<1.0	<1.0	<1.0	<0.50	<1.0	<1.0	<1.0	<0.50	<0.50	<0.50	<1.0	<1.0	<1.0	<1.0	1.4	<1.0	<1.0	<1.0	<2.0	<1.0	<10
W-8	8/4/2000	<1	<1	<1	<1	<1	<0.5	<1	<1	<0.5	2.8	<4.6	<1	<2.9	<1	<1	<1	<1	<1	<1	<1	-	<1	-
	2/6/2001	NS	NS	NS	NS	NS	NS	NS	NS	NS	NS	NS	NS	NS	NS	NS	NS	NS	NS	NS	NS	-	NS	-
	7/26/2001	<1	<1	<1	<1	<1	<5	<1	<1	<0.5	0.67	<1	<1	<1	<1	<1	<1	<1	<1	<1	<1	-	<1	-

TABLE IV
Summary of VOC and Oxygenate Results
Former CENCO Refinery
Santa Fe Springs, CA

Well	Sample Date	PCE	TCE	c1,2-DCE	t1,2-DCE	1,1-DCE	1,2-DCA	1,3,5-TMB	1,2,4-TMB	VC	B	T	E	X	sBUT	nPRO	CBNZ	1,1-DCA	ISO-P	MC	NAP	DIPE	MTBE	TBA
W-8	5/7/2002	<1	<1	<1	<1	<1	<5	<1	<1	<0.5	0.51	<1	<1	<1	<1	<1	<1	<1	<1	<10	<10	-	<1	<10000
	9/24/2002	<1	<1	<1	<1	<1	<5	<1	<1	<0.5	0.64	<1	<1	<2	<1	<1	<1	<1	<1	<10	<10	-	<1	<10000
	7/1/2004	<5	<5	<5	<5	<5	<5	<5	<5	<5	1.9J	1.8	0.72	1.42	<5	<5	<5	<5	<5	<5	<5	-	<5	<100
	10/6/2005	<1	<1	<1	<1	<1	<0.5	<1	<1	<0.5	0.52	<1	<1	<1	<1	<1	<1	<1	<1	<10	<10	<2	<1	<10
	2/16/2006	<5	<5	<5	<5	<5	<5	<5	<5	<5	<1	<5	<5	<5	<5	<5	<5	<5	<5	<5	<5	<1	<1	<10
	8/4/2006	<2	<2	<2	<2	<5	<2	<2	<2	<5	<2	<2	<2	<4	<5	<2	<2	<2	<2	<5	<5	<5	<5	<50
	11/10/2006	<2	<2	<2	<2	<5	<2	<2	<2	<5	<2	<2	<2	<4	<5	<2	<2	<2	<2	<5	<5	<5	<5	<50
	2/9/2007	<2	<2	<2	<2	<5	<2	<2	<2	<5	<2	<2	<2	<4	<5	<2	<2	<2	<2	<5	<5	<5	<5	<50
	5/8/2007	<2	<2	<2	<2	<5	<2	<2	0.23	<5	0.49	0.73	0.33	<4	<5	<2	<2	<2	<2	<5	<5	<5	<5	<50
	8/7/2007	<2	<2	<2	<2	<5	<2	<2	0.3	<5	0.49	0.82	0.44	0.94	<5	<2	<2	<2	<2	<5	<5	<5	<5	<50
	11/6/2007	<0.32	<0.26	<0.32	<0.27	<0.42	<0.28	<0.26	<0.23	<0.3	0.52	0.75	0.4	<0.9	<0.25	<0.27	<0.36	<0.27	<0.25	<0.95	<0.41	<0.25	<0.32	7.5
	2/4/2008	<2	<2	<2	<2	<5	<2	<2	0.25	<5	0.46	0.81	0.39	<4	<5	<2	<2	<2	<2	<5	<5	<5	<5	<50
	1/13/2009	<2	<2	<2	<2	<5	<2	<2	<2	<5	<2	<2	<2	<4	<5	<2	<2	<2	<2	<5	<5	<5	<5	<50
	4/21/2009	<2	<2	<2	<2	<5	<2	<2	<2	<5	0.45	0.82	0.37	<4	<5	<2	<2	<2	<2	<5	<5	<5	<5	<50
	3/4/2010	<1.0	<1.0	<1.0	<1.0	<1.0	<0.50	<1.0	<1.0	<1.0	<0.50	0.85	<0.50	-	<1.0	<1.0	<1.0	<1.0	<1.0	<1.0	<1.0	-	<1.0	<10
	5/17/2010	<1.0	<1.0	<1.0	<1.0	<1.0	<0.50	<1.0	<1.0	<1.0	<0.50	0.5	<0.50	-	<1.0	<1.0	<1.0	<1.0	<1.0	<1.0	<1.0	-	<1.0	<10
	8/4/2010	<1.0	<1.0	<1.0	<1.0	<1.0	<0.50	<1.0	<1.0	<1.0	<0.50	0.8	<0.50	-	<1.0	<1.0	<1.0	<1.0	<1.0	<1.0	<1.0	-	<1.0	<10
	11/4/2010	<1.0	<1.0	<1.0	<1.0	<1.0	<0.50	<1.0	<1.0	<1.0	<0.50	0.6	<0.50	<1.0	<1.0	<1.0	<1.0	<1.0	<1.0	<1.0	<1.0	<2.0	<1.0	<10
	2/7/2011	<1.0	<1.0	<1.0	<1.0	<1.0	<0.50	<1.0	<1.0	<1.0	<0.50	0.85	<0.50	<1.0	<1.0	<1.0	<1.0	<1.0	<1.0	<1.0	<1.0	<2.0	<1.0	<10
W-9	11/7/2006	<2	<2	<2	<2	<5	<2	<2	<2	<5	<2	<2	<2	<4	<5	<2	<2	<2	<2	<5	<5	<5	<5	<50
	2/6/2007	<2	<2	<2	<2	<5	<2	<2	<2	<5	<2	<2	<2	<4	<5	<2	<2	<2	<2	<5	<5	<5	<5	<50
	5/9/2007	<2	<2	2	<2	<5	<2	<2	<2	<5	<2	<2	<2	<4	<5	<2	<2	<2	<2	1.9	<5	<5	<5	17
	8/7/2007	<2	0.78	3	0.31	<5	<2	<2	<2	<5	<2	<2	<2	<4	0.29	<2	<2	<2	0.29	<5	<5	<5	<5	22
	11/6/2007	<0.32	0.56	3.8	0.31	<0.42	<0.28	<0.26	<0.23	<0.3	<0.28	<0.36	<0.25	<0.9	<0.25	<0.27	<0.36	<0.27	<0.25	<0.95	<0.41	<0.25	<0.32	19
	2/5/2008	<2	0.48	3.4	0.3	<5	<2	<2	<2	<5	<2	<2	<2	<4	<5	<2	<2	<2	<2	<5	0.5	<5	<5	23
	1/15/2009	<2	<2	3.2	<2	<5	<2	<2	<2	<5	<2	<2	<2	<4	<5	<2	<2	<2	<2	<5	<5	<5	<5	18
	4/23/2009	<2	<2	2.6	<2	<5	<2	<2	<2	<5	<2	<2	<2	<4	<5	<2	<2	<2	<2	1.3	<5	<5	<5	18
	3/3/2010	<1.0	<1.0	1.9	<1.0	<1.0	<0.50	<1.0	<1.0	<1.0	<0.50	<0.50	<0.50	<1.0	<1.0	<1.0	<1.0	<1.0	<1.0	<1.0	<1.0	<2.0	<1.0	<10
	5/12/2010	<1.0	<1.0	2.8	<1.0	<1.0	<0.50	<1.0	<1.0	<1.0	<0.50	<0.50	<0.50	<1.0	<1.0	<1.0	<1.0	<1.0	<1.0	<1.0	<1.0	<2.0	<1.0	<10
	8/4/2010	<1.0	<1.0	4	<1.0	<1.0	<0.50	<1.0	<1.0	<1.0	<0.50	<0.50	<0.50	<1.0	<1.0	<1.0	<1.0	<1.0	<1.0	<1.0	<1.0	<2.0	<1.0	<10
	11/3/2010	<1.0	<1.0	3.2	<1.0	<1.0	<0.50	<1.0	<1.0	<1.0	<0.50	<0.50	<0.50	<1.0	<1.0	<1.0	<1.0	<1.0	<1.0	<1.0	<1.0	<2.0	<1.0	<10
	2/2/2011	<1.0	<1.0	1.5	<1.0	<1.0	<0.50	<1.0	<1.0	<1.0	<0.50	<0.50	<0.50	<1.0	<1.0	<1.0	<1.0	<1.0	<1.0	<1.0	<1.0	<2.0	<1.0	<10
W-10	11/8/2006	<40	<40	<40	<40	<100	<40	110	360	<100	8200	5000	570	2900	<100	70	<40	<40	51	<100	340	<100	<100	<1000
	2/9/2007	<200	<200	<200	<200	<500	<200	<200	280	<500	6400	2200	520	2900	<500	<200	<200	<200	<200	<500	<500	<500	<500	<5000
	5/11/2007	<4	<4	6.6	<4	<25	1.4	53	150	3.9	500	160	110	700	5.8	33	<4	8.8	21	<25	150	<25	<25	85
	8/9/2007	<10	<10	6.4	<10	<25	<10	33	90	3	590	20	82	370	4.8	22	<10	8	16	<25	59	<25	<25	68
	11/9/2007	<32	<26	<32	<27	<42	<28	55	190	<30	4700	460	330	1500	<25	40	<36	<27	31	<95	210	<25	<32	<490
	2/8/2008	<200	<200	<200	<200	<500	<200	42	150	<500	7600	310	330	1600	<500	37	<200	<200	<200	<500	170	<500	<500	<5000

TABLE IV
Summary of VOC and Oxygenate Results
Former CENCO Refinery
Santa Fe Springs, CA

Well	Sample Date	PCE	TCE	c1,2-DCE	t1,2-DCE	1,1-DCE	1,2-DCA	1,3,5-TMB	1,2,4-TMB	VC	B	T	E	X	sBUT	nPRO	CBNZ	1,1-DCA	ISO-P	MC	NAP	DIPE	MTBE	TBA
W-10	1/21/2009	<200	<200	<200	<200	<500	<200	<200	230	<500	8100	<200	440	1400	<500	<200	<200	<200	<200	<500	<500	<500	<500	<5000
	4/27/2009	<200	<200	<200	<200	<500	<200	36	230	<500	7400	<200	490	830	<500	61	<200	<200	35	<500	270	<500	<500	<5000
	3/8/2010	<500	<500	<500	<500	<500	7.3	18	93	<500	4200	4.4	200	-	2.4	23	<500	<500	17	<500	110	<2.0	<500	<5000
	5/17/2010	<1.0	<1.0	<1.0	<1.0	<1.0	4.2	14	82	<1.0	3900	7.4	230	-	2.8	24	<1.0	<1.0	19	<1.0	130	<2.0	<1.0	15
	8/9/2010	<1.0	<1.0	<1.0	<1.0	<1.0	3	10	62	<1.0	2400	12	130	-	4.4	28	<1.0	<1.0	21	<1.0	60	<2.0	<1.0	93
	11/8/2010	<1.0	<1.0	<1.0	<1.0	<1.0	2.6	8.1	56	1.4	2900	45	160	146.4	2.7	21	<1.0	1	21	<1.0	180	<2.0	<1.0	<10
	2/8/2011	<1.0	<1.0	<1.0	<1.0	<1.0	4.0	13	61	<1.0	2,600	100	160	168	6.1	43	<1.0	<1.0	31	<1.0	150	<2.0	<1.0	<10
W-11	11/9/2006	<2	<2	18	<2	<5	<2	40	73	<5	99	7.8	74	280	<5	18	<2	<2	15	<5	<5	<5	<5	<50
	2/9/2007	<4	<4	15	<4	<10	<4	28	56	<10	95	14	78	300	<10	12	<4	<4	17	<10	<10	<10	<10	<100
	5/9/2007	<2	<2	18	0.41	<5	<2	4.4	9	0.96	45	1.6	19	51	0.52	3.5	<2	<2	4	2.6	0.68	<5	<5	<50
	8/8/2007	<2	<2	9.9	<2	<5	0.29	8.6	15	1.1	700	3.7	36	18	1.5	7.9	<2	<2	13	<5	0.81	<5	<5	<50
	11/8/2007	<0.32	<0.26	10	<0.27	<0.42	<0.28	17	35	<0.3	61	1.2	14	49	1.2	6	<0.36	<0.27	6.1	<0.95	1	<0.25	<0.32	<4.9
	12/8/2010	<1	<1	<1	<1	<1	<0.5	800	1300	<1	150	51	260	2990	41	100	<1	1.4	92	<1	48	<2	17	43
	2/4/2011	<1.0	<1.0	<1.0	<1.0	<1.0	<0.50	180	100	<1.0	100	1.2	23	116	3.8	9.5	<1.0	<1.0	10	<1.0	7.6	<2.0	<1.0	<10
W-12	11/8/2006	<2	<2	5.4	<2	<5	<2	<2	<2	<5	<2	<2	<2	<4	<5	7	<2	<2	<2	<5	<5	<5	<5	55
	2/7/2007	<2	<2	6.8	<2	<5	<2	<2	<2	<5	<2	<2	<2	<4	<5	<2	<2	<2	<2	<5	<5	<5	<5	50
	5/9/2007	<2	<2	4.3	0.31	<5	0.37	<2	<2	1.1	<2	<2	<2	<4	0.61	<2	<2	<2	<2	1.7	<5	<5	<5	40
	8/8/2007	<2	0.27	3.1	<2	<5	<2	<2	<2	0.85	<2	<2	0.56	<4	0.5	0.38	<2	<2	0.51	<5	<5	<5	0.36	40
	11/6/2007	<0.32	<0.26	2.6	<0.27	<0.42	0.42	<0.26	<0.23	0.47	0.37	<0.36	0.97	<0.9	1.5	2.4	<0.36	<0.27	2.2	<0.95	0.66	<0.25	1.2	58
	2/8/2008	<2	<2	1.8	<2	<5	0.45	<2	<2	<5	0.94	<2	3	<4	1.5	4.3	<2	<2	2.4	<5	2.5	<5	0.82	54
	1/20/2009	<2	<2	5.4	0.48	<5	<2	<2	<2	2.4	<2	<2	0.69	<4	1.4	1.2	<2	<2	1	<5	<5	0.28	<5	32
	4/22/2009	<2	<2	3.7	<2	<5	<2	<2	0.26	1.5	<2	<2	2.1	<4	2.5	5.5	<2	<2	2.2	<5	8.2	<5	0.33	30
	3/4/2010	<1.0	<1.0	<1.0	<1.0	<1.0	<0.50	<1.0	<1.0	<1.0	<0.50	<0.50	2.1	-	2.8	9.8	<1.0	<1.0	3.9	<1.0	1.5	-	<1.0	<10
	5/12/2010	<1.0	<1.0	<1.0	<1.0	<1.0	<0.50	<1.0	<1.0	<1.0	<0.50	<0.50	3	-	3.7	15	<1.0	<1.0	5.8	<1.0	2.1	-	<1.0	<10
	8/5/2010	<1.0	<1.0	<1.0	<1.0	<1.0	<0.50	<1.0	<1.0	<1.0	<0.50	<0.50	3.5	-	5.1	21	<1.0	<1.0	7.7	<1.0	2.8	-	<1.0	<10
	11/4/2010	<1.0	<1.0	<1.0	<1.0	<1.0	<0.50	<1.0	<1.0	<1.0	<0.50	<0.50	1.4	<1.0	2.4	9.8	<1.0	<1.0	3.5	<1.0	1.7	<2.0	<1.0	<10
	2/3/2011	<1.0	<1.0	<1.0	<1.0	<1.0	<0.50	<1.0	<1.0	<1.0	<0.50	<0.50	<0.50	<1.0	<1.0	1.1	<1.0	<1.0	<1.0	<1.0	1	<2.0	<1.0	<10
W-14A	2/12/2008	2.3	15	9	1.1	2.5	0.37	<2	<2	<5	<2	<2	<2	<4	<5	<2	<2	0.46	<2	<5	<5	<5	<5	<50
	1/13/2009	<2	2	<2	<2	<5	<2	<2	<2	<5	<2	<2	<2	<4	<5	<2	<2	<2	<2	<5	<5	<5	<5	<50
	4/21/2009	1.3	14	8.7	0.86	2.8	0.4	<2	<2	<5	<2	<2	<2	<4	<5	<2	<2	0.44	<2	<5	<5	<5	0.47	8.1
	3/1/2010	<1.0	<1.0	1.7	<1.0	<1.0	<0.50	<1.0	<1.0	<1.0	<0.50	<0.50	<0.50	-	<1.0	<1.0	<1.0	<1.0	<1.0	<1.0	<1.0	-	<1.0	<10
	5/10/2010	<1.0	<1.0	1.9	<1.0	<1.0	<0.50	<1.0	<1.0	<1.0	<0.50	<0.50	<0.50	-	<1.0	<1.0	<1.0	<1.0	<1.0	<1.0	<1.0	-	<1.0	<10
	8/2/2010	<1.0	<1.0	3.4	<1.0	<1.0	<0.50	<1.0	<1.0	<1.0	<0.50	<0.50	<0.50	-	<1.0	<1.0	<1.0	<1.0	<1.0	<1.0	<1.0	-	<1.0	<10
	11/1/2010	<1.0	<1.0	<1.0	<1.0	<1.0	<0.50	<1.0	<1.0	<1.0	<0.50	<0.50	<0.50	<1.0	<1.0	<1.0	<1.0	<1.0	<1.0	<1.0	<1.0	<2.0	<1.0	<10
	1/31/2011	<1.0	<1.0	<1.0	<1.0	<1.0	<0.50	<1.0	<1.0	<1.0	<0.50	<0.50	<0.50	<1.0	<1.0	<1.0	<1.0	<1.0	<1.0	<1.0	<1.0	<2.0	<1.0	<10
W-14B	2/12/2008	0.72	2.2	0.83	<2	<5	<2	<2	<2	<5	<2	<2	<2	<4	<5	<2	<2	<2	<2	<5	<5	<5	<5	<50

TABLE IV
Summary of VOC and Oxygenate Results
Former CENCO Refinery
Santa Fe Springs, CA

Well	Sample Date	PCE	TCE	c1,2-DCE	t1,2-DCE	1,1-DCE	1,2-DCA	1,3,5-TMB	1,2,4-TMB	VC	B	T	E	X	sBUT	nPRO	CBNZ	1,1-DCA	ISO-P	MC	NAP	DIPE	MTBE	TBA
W-14B	1/13/2009	8.4	28	4.8	<2	10	<2	<2	<2	<5	<2	<2	<2	<4	<5	<2	<2	<2	<2	<5	<5	<5	<5	<50
	4/21/2009	19	81	9.6	2.6	26	0.45	<2	<2	<5	<2	<2	<2	<4	<5	<2	<2	2.2	<2	<5	<5	<5	<5	<50
	3/1/2010	<1.0	12	5.6	<1.0	<1.0	<0.50	<1.0	<1.0	<1.0	<0.50	<0.50	<0.50	-	<1.0	<1.0	<1.0	<1.0	<1.0	<1.0	<1.0	-	<1.0	<10
	5/10/2010	1.2	32	6.2	1.1	6	<0.50	<1.0	<1.0	<1.0	<0.50	<0.50	<0.50	-	<1.0	<1.0	<1.0	<1.0	<1.0	<1.0	<1.0	-	<1.0	<10
	8/2/2010	<1.0	17	3.1	<1.0	3.4	<0.50	<1.0	<1.0	<1.0	<0.50	<0.50	<0.50	-	<1.0	<1.0	<1.0	<1.0	<1.0	<1.0	<1.0	-	<1.0	<10
	11/1/2010	2	45	10	2	14	<0.50	<1.0	<1.0	<1.0	<0.50	<0.50	<0.50	<0.50	<1.0	<1.0	<1.0	<1.0	<1.0	<1.0	<1.0	<2.0	<1.0	<10
	1/31/2011	<1.0	9.7	2	<1.0	3.1	<0.50	<1.0	<1.0	<1.0	<0.50	<0.50	<0.50	<0.50	<1.0	<1.0	<1.0	<1.0	<1.0	<1.0	<1.0	<2.0	<1.0	<10
W-14C	2/12/2008	0.89	44	22	5.7	16	0.48	<2	<2	0.58	1.2	<2	<2	<4	0.39	<2	<2	3.7	0.31	<5	<5	0.53	<5	<50
	1/14/2009	<2	30	34	8.8	17	<2	<2	<2	<5	2.5	<2	<2	<4	<5	<2	<2	3.4	<2	<5	<5	<5	<5	<50
	4/21/2009	<2	20	23	4.5	8.1	<2	<2	<2	<5	1.5	<2	<2	<4	0.49	<2	<2	2.1	0.32	<5	<5	0.27	<5	10
	3/1/2010	<1.0	13	34	5.8	12	<0.50	<1.0	<1.0	<1.0	1.6	<0.50	<0.50	-	<1.0	<1.0	<1.0	2.4	<1.0	<1.0	<1.0	-	<1.0	<10
	5/10/2010	<1.0	4.1	13	2	<1.0	<0.50	<1.0	<1.0	<1.0	0.58	<0.50	<0.50	-	<1.0	<1.0	<1.0	<1.0	<1.0	<1.0	<1.0	-	<1.0	<10
	8/2/2010	<1.0	7.8	35	4.6	4.2	<0.50	<1.0	<1.0	<1.0	1.1	<0.50	<0.50	-	<1.0	<1.0	<1.0	2.4	<1.0	<1.0	<1.0	-	<1.0	<10
	11/1/2010	<1.0	<1.0	<1.0	<1.0	<1.0	<0.50	<1.0	<1.0	<1.0	<0.50	<0.50	<0.50	<1.0	<1.0	<1.0	<1.0	<1.0	<1.0	<1.0	<1.0	<2.0	<1.0	<10
	1/31/2011	<1.0	3.8	9.9	1.1	3	<0.50	<1.0	<1.0	<1.0	<0.50	<0.50	<0.50	<1.0	<1.0	<1.0	<1.0	<1.0	<1.0	<1.0	<1.0	<2.0	<1.0	<10
W-15A	2/11/2008	<20	<20	<20	<20	<50	<20	<20	<20	<50	620	4.9	5.1	12	10	140	<20	<20	95	<50	<50	<50	650	120
	1/14/2009	<2	<2	<2	<2	<5	<2	<2	<2	<5	7.4	<2	<2	<4	<5	10	<2	<2	6.4	<5	<5	<5	190	170
	4/24/2009	<4	<4	<4	<4	<10	<4	<4	<4	<10	8.4	<4	<4	<8	1.3	13	<4	<4	8.7	<10	<10	<10	220	220
	3/2/2010	<1.0	<1.0	<1.0	<1.0	<1.0	<0.50	<1.0	<1.0	<1.0	0.93	<0.50	<0.50	-	<1.0	4.3	<1.0	<1.0	2.9	<1.0	<1.0	-	44	94
	5/10/2010	<1.0	<1.0	<1.0	<1.0	<1.0	<0.50	<1.0	<1.0	<1.0	1.5	<0.50	<0.50	-	<1.0	4.7	<1.0	<1.0	3.2	<1.0	<1.0	-	85	<10
	8/2/2010	<1.0	<1.0	<1.0	<1.0	<1.0	<0.50	<1.0	<1.0	<1.0	0.54	<0.50	<0.50	-	<1.0	2.9	<1.0	<1.0	2.1	<1.0	<1.0	-	71	180
	11/1/2010	<1.0	<1.0	<1.0	<1.0	<1.0	<0.50	<1.0	<1.0	<1.0	<0.50	<0.50	<0.50	<1.0	<1.0	<1.0	<1.0	<1.0	<1.0	<1.0	<1.0	<2.0	2.5	88
	11/1/2010	<1.0	<1.0	<1.0	<1.0	<1.0	<0.50	<1.0	<1.0	<1.0	0.66	<0.50	<0.50	1	<1.0	<1.0	<1.0	<1.0	<1.0	<1.0	<1.0	<2.0	6.8	98
	2/1/2011	<1.0	<1.0	<1.0	<1.0	<1.0	1.6	200	490	<1.0	1400	610	400	2200	<1.0	62	<1.0	<1.0	32	<1.0	64	<2.0	260	390
W-15B	2/11/2008	<20	<20	<20	<20	<50	<20	<20	<20	<50	900	<20	<20	<40	5	51	<20	<20	46	<50	<50	<50	20	110
	1/14/2009	<2	<2	<2	<2	<5	<2	<2	<2	<5	160	<2	<2	5.7	<5	23	<2	<2	19	<5	<5	<5	20	110
	4/24/2009	<2	<2	<2	<2	<5	<2	<2	<2	<5	6.2	<2	<2	<4	<5	1.3	<2	<2	1	<5	<5	<5	5.8	98
	3/2/2010	<1.0	<1.0	<1.0	<1.0	<1.0	<0.50	<1.0	<1.0	<1.0	3.8	<0.50	<0.50	-	1	5	<1.0	<1.0	4.6	<1.0	<1.0	-	5	<10
	5/11/2010	<1.0	<1.0	<1.0	<1.0	<1.0	<0.50	<1.0	<1.0	<1.0	20	<0.50	<0.50	-	2.4	18	<1.0	<1.0	16	<1.0	<1.0	-	17	36
	8/3/2010	<1.0	<1.0	<1.0	<1.0	<1.0	<0.50	<1.0	<1.0	<1.0	14	<0.50	<0.50	-	1.1	10	<1.0	<1.0	8.8	<1.0	<1.0	-	19	67
	11/2/2010	<1.0	<1.0	<1.0	<1.0	<1.0	<0.50	<1.0	<1.0	<1.0	38	<0.50	<0.50	3.94	4.1	25	<1.0	<1.0	22	<1.0	<1.0	<2.0	50	87
	2/1/2011	<1.0	<1.0	<1.0	<1.0	<1.0	<0.50	<1.0	<1.0	<1.0	7	1.7	0.55	5.4	<1.0	2.8	<1.0	<1.0	2.1	<1.0	<1.0	<2.0	22	21
W-15C	2/11/2008	<2	0.51	1.1	<2	<5	0.35	<2	<2	0.34	0.94	0.57	<2	<4	<5	<2	<2	0.45	<2	<5	<5	<5	<5	18
	1/15/2009	<2	3.2	5.7	<2	0.66	0.86	<2	<2	0.9	1.1	<2	<2	<4	<5	<2	<2	1.2	<2	<5	<5	<5	<5	27
	4/24/2009	<2	0.55	1	<2	<5	<2	<2	<2	<5	<2	<2	<2	<4	<5	<2	<2	<2	0.36	<5	<5	<5	<5	25
	3/2/2010	<1.0	<1.0	1.4	<1.0	<1.0	<0.50	<1.0	<1.0	<1.0	<0.50	<0.50	<0.50	-	<1.0	<1.0	<1.0	<1.0	<1.0	<1.0	<1.0	-	<1.0	<10

TABLE IV
Summary of VOC and Oxygenate Results
Former CENCO Refinery
Santa Fe Springs, CA

Well	Sample Date	PCE	TCE	c1,2-DCE	t1,2-DCE	1,1-DCE	1,2-DCA	1,3,5-TMB	1,2,4-TMB	VC	B	T	E	X	sBUT	nPRO	CBNZ	1,1-DCA	ISO-P	MC	NAP	DIPE	MTBE	TBA
W-15C	5/11/2010	<1.0	1.1	1.6	<1.0	<1.0	<0.50	<1.0	<1.0	<1.0	<0.50	<0.50	<0.50	-	<1.0	<1.0	<1.0	<1.0	<1.0	<1.0	<1.0	-	<1.0	<10
	8/3/2010	<1.0	3.5	4.7	<1.0	<1.0	0.54	<1.0	<1.0	1.5	<0.50	<0.50	<0.50	-	<1.0	<1.0	<1.0	1	<1.0	<1.0	<1.0	-	<1.0	20
	11/2/2010	<1.0	1	1.7	<1.0	<1.0	<0.50	<1.0	<1.0	<1.0	<0.50	<0.50	<0.50	<1.0	<1.0	<1.0	<1.0	<1.0	<1.0	<1.0	<1.0	<2.0	2.9	<10
	2/1/2011	<1.0	1.8	2.6	<1.0	<1.0	<0.50	<1.0	<1.0	<1.0	1.6	0.85	<0.50	2	<1.0	<1.0	<1.0	<1.0	<1.0	<1.0	<1.0	<2.0	<1.0	<10
W-16A	11/9/2007	<0.32	<0.26	<0.32	<0.27	<0.42	<0.28	<0.26	<0.23	16	41	<0.36	<0.25	<0.9	1.7	1.7	<0.36	2.6	4.3	<0.95	<0.41	0.27	<0.32	30
	2/6/2008	<2	<2	<2	0.88	<5	<2	0.63	<2	14	40	<2	<2	<4	2.2	3.3	0.6	2.8	6.7	<5	<5	0.33	<5	34
	1/21/2009	<2	<2	<2	<2	<5	<2	<2	<2	7.2	30	<2	<2	<4	<5	4.2	<2	2.5	9.4	<5	<5	<5	<5	<50
	4/27/2009	<2	<2	<2	0.54	<5	<2	0.27	<2	17	34	<2	<2	<4	2.8	1.7	0.57	1.8	7.9	<5	<5	0.32	<5	20
	3/5/2010	<1.0	<1.0	<1.0	<1.0	<1.0	<0.50	<1.0	<1.0	2.9	4.2	<0.50	<0.50	<1.0	<1.0	<1.0	<1.0	<1.0	1.4	<1.0	<1.0	<2.0	<1.0	<10
	5/14/2010	<1.0	<1.0	<1.0	<1.0	<1.0	<0.50	<1.0	<1.0	<1.0	<0.50	<0.50	<0.50	<1.0	<1.0	<1.0	<1.0	<1.0	<1.0	<1.0	<1.0	<2.0	<1.0	<10
	8/9/2010	<1.0	<1.0	<1.0	<1.0	<1.0	<0.50	<1.0	<1.0	<1.0	0.93	<0.50	<0.50	<1.0	<1.0	<1.0	<1.0	<1.0	<1.0	<1.0	<1.0	<2.0	<1.0	<10
	11/5/2010	<1.0	<1.0	<1.0	<1.0	<1.0	<0.50	<1.0	<1.0	<1.0	<0.50	<0.50	<0.50	<1.0	<1.0	<1.0	<1.0	<1.0	<1.0	<1.0	<1.0	<2.0	<1.0	<10
	2/7/2011	<1.0	<1.0	<1.0	<1.0	<1.0	<0.50	<1.0	<1.0	1.1	12	<0.50	<0.50	<1.0	1.5	1.6	<1.0	1.7	5.2	<1.0	<1.0	<2.0	<1.0	<10
W-16B	11/9/2007	<0.32	0.72	6.6	8.7	<0.42	<0.28	<0.26	0.26	<0.3	7.4	<0.36	<0.25	<0.9	<0.25	<0.27	<0.36	<0.27	0.25	<0.95	0.8	<0.25	<0.32	9.1
	2/6/2008	<2	2.2	27	43	<5	<2	<2	0.4	<5	48	<2	0.33	<4	<5	1.4	<2	<2	2.1	<5	1.9	<5	<5	9.9
	1/21/2009	<2	<2	9.7	15	<5	<2	<2	<2	<5	16	<2	<2	<4	<5	<2	<2	<2	<2	<5	<5	<5	<5	<50
	4/27/2009	<20	<20	6.1	9.4	<50	<20	<20	<20	<50	0.9	<20	<20	<40	<50	<20	<20	<20	<20	<50	<50	<50	<50	<500
	3/8/2010	<1.0	<1.0	5.8	3.7	<1.0	<0.50	<1.0	<1.0	<1.0	8.6	<0.50	<0.50	<1.0	<1.0	<1.0	<1.0	<1.0	<1.0	<1.0	<1.0	<2.0	<1.0	<10
	5/14/2010	<1.0	<1.0	3	1	<1.0	<0.50	<1.0	<1.0	<1.0	3	<0.50	<0.50	<1.0	<1.0	<1.0	<1.0	<1.0	<1.0	<1.0	<1.0	<2.0	<1.0	<10
	8/9/2010	<1.0	<1.0	<1.0	<1.0	<1.0	<0.50	<1.0	<1.0	<1.0	1.3	<0.50	<0.50	<1.0	<1.0	<1.0	<1.0	<1.0	<1.0	<1.0	<1.0	<2.0	<1.0	<10
	11/5/2010	<1.0	<1.0	13	9.4	<1.0	<0.50	<1.0	<1.0	<1.0	23	<0.50	<0.50	<1.0	<1.0	<1.0	<1.0	1.2	<1.0	<1.0	<1.0	<2.0	<1.0	<10
	2/7/2011	<1.0	3.5	70	50	2	<0.50	<1.0	<1.0	<1.0	80	<0.50	<0.50	<1.0	<1.0	<1.0	5.4	8.5	<1.0	<1.0	18	<2.0	<1.0	<10
W-16C	11/9/2007	<0.32	0.76	40	12	1.1	<0.28	<0.26	<0.23	5.6	18	<0.36	<0.25	<0.9	<0.25	<0.27	4.6	11	<0.25	<0.95	<0.41	<0.25	<0.32	13
	2/6/2008	<2	0.74	66	14	2.7	<2	<2	<2	18	30	0.46	<2	<4	<5	<2	12	24	<2	<5	<5	<5	<5	21
	1/21/2009	<2	<2	73	17	<5	<2	<2	<2	24	40	<2	<2	<4	<5	<2	16	35	<2	<5	<5	<5	<5	<50
	4/28/2009	<2	0.52	41	12	1.3	<2	<2	<2	8.2	20	<2	<2	<4	<5	<2	7.1	14	<2	<5	<5	<5	<5	8.2
	3/8/2010	<1.0	<1.0	9.1	1.2	<1.0	<0.50	<1.0	<1.0	<1.0	2.5	<0.50	<0.50	<1.0	<1.0	<1.0	<1.0	1.6	<1.0	<1.0	<1.0	<2.0	<1.0	<10
	5/14/2010	<1.0	<1.0	3.8	<1.0	<1.0	<0.50	<1.0	<1.0	<1.0	1.3	<0.50	<0.50	<1.0	<1.0	<1.0	<1.0	1.2	<1.0	<1.0	<1.0	<2.0	<1.0	<10
	8/9/2010	<1.0	<1.0	<1.0	<1.0	<1.0	<0.50	<1.0	<1.0	<1.0	<0.50	<0.50	<0.50	<1.0	<1.0	<1.0	<1.0	<1.0	<1.0	<1.0	<1.0	<2.0	<1.0	<10
	11/5/2010	<1.0	<1.0	30	7.6	1.4	<0.50	<1.0	<1.0	9.6	14	<0.50	<0.50	<1.0	<1.0	<1.0	4.9	11	<1.0	<1.0	<1.0	<2.0	<1.0	<10
	2/7/2011	<1.0	<1.0	68	15	3.3	<0.50	<1.0	<1.0	14	33	0.54	<0.50	<1.0	<1.0	<1.0	14	22	<1.0	<1.0	6.9	<2.0	<1.0	<10
W-17A	2/14/2008	<2	0.92	6.2	<2	0.6	1.4	<2	<2	0.7	<2	<2	<2	<4	0.27	<2	<2	0.47	<2	<5	<5	0.37	<5	140
	1/16/2009	<2	0.5	1.4	0.39	0.46	<2	<2	0.33	<5	<2	<2	<2	<4	<5	0.27	<2	<2	<2	<5	0.41	<5	<5	54
	4/22/2009	<2	2.1	7.7	1.9	2.3	0.65	<2	<2	<5	4.5	<2	<2	<4	1.5	5.8	<2	0.51	5.9	<5	<5	<5	<5	57
	3/3/2010	<1.0	<1.0	1.6	<1.0	<1.0	<0.50	<1.0	<1.0	<1.0	<0.50	<0.50	<0.50	<1.0	<1.0	<1.0	<1.0	<1.0	<1.0	<1.0	<1.0	<2.0	<1.0	14
	5/12/2010	<1.0	<1.0	4.2	<1.0	<1.0	<0.50	<1.0	<1.0	<1.0	1.1	<0.50	<0.50	<1.0	<1.0	<1.0	<1.0	<1.0	<1.0	<1.0	<1.0	<2.0	<1.0	<10

TABLE IV
Summary of VOC and Oxygenate Results
Former CENCO Refinery
Santa Fe Springs, CA

Well	Sample Date	PCE	TCE	c1,2-DCE	t1,2-DCE	1,1-DCE	1,2-DCA	1,3,5-TMB	1,2,4-TMB	VC	B	T	E	X	sBUT	nPRO	CBNZ	1,1-DCA	ISO-P	MC	NAP	DIPE	MTBE	TBA
W-17A	8/4/2010	<1.0	<1.0	1.7	<1.0	<1.0	<0.50	<1.0	<1.0	<1.0	<0.50	<0.50	<0.50	<1.0	<1.0	<1.0	<1.0	<1.0	<1.0	<1.0	<1.0	<2.0	<1.0	<10
	11/3/2010	<1.0	<1.0	1.3	<1.0	<1.0	<0.50	<1.0	<1.0	<1.0	<0.50	<0.50	<0.50	<1.0	<1.0	<1.0	<1.0	<1.0	<1.0	<1.0	<1.0	<2.0	<1.0	<10
	2/2/2011	<1.0	<1.0	2	<1.0	<1.0	<0.50	<1.0	<1.0	<1.0	<0.50	<0.50	<0.50	<1.0	<1.0	<1.0	<1.0	<1.0	<1.0	<1.0	<1.0	<2.0	<1.0	<10
W-17B	2/14/2008	<2	0.74	1.4	<2	<5	<2	<2	<2	<5	<2	<2	<2	<4	<5	<2	<2	<2	<2	<5	<5	<5	<5	30
	1/16/2009	<2	<2	<2	<2	<5	<2	<2	<2	<5	<2	<2	<2	<4	<5	<2	<2	<2	<2	<5	<5	<5	<5	18
	4/22/2009	<2	0.72	0.71	<2	<5	<2	<2	<2	<5	<2	<2	<2	<4	<5	<2	<2	<2	<2	<5	<5	<5	<5	18
	3/3/2010	<1.0	<1.0	<1.0	<1.0	<1.0	<0.50	<1.0	<1.0	<1.0	<0.50	<0.50	<0.50	<1.0	<1.0	<1.0	<1.0	<1.0	<1.0	<1.0	<1.0	<2.0	<1.0	<10
	5/12/2010	<1.0	<1.0	<1.0	<1.0	<1.0	<0.50	<1.0	<1.0	<1.0	<0.50	<0.50	<0.50	<1.0	<1.0	<1.0	<1.0	<1.0	<1.0	<1.0	<1.0	<2.0	<1.0	<10
	8/5/2010	<1.0	<1.0	<1.0	<1.0	<1.0	<0.50	<1.0	<1.0	<1.0	<0.50	<0.50	<0.50	<1.0	<1.0	<1.0	<1.0	<1.0	<1.0	<1.0	<1.0	<2.0	<1.0	<10
	11/3/2010	<1.0	<1.0	<1.0	<1.0	<1.0	<0.50	<1.0	<1.0	<1.0	<0.50	<0.50	<0.50	<1.0	<1.0	<1.0	<1.0	<1.0	<1.0	<1.0	<1.0	<2.0	<1.0	<10
	2/2/2011	<1.0	<1.0	<1.0	<1.0	<1.0	<0.50	<1.0	<1.0	<1.0	<0.50	<0.50	<0.50	<1.0	<1.0	<1.0	<1.0	<1.0	<1.0	<1.0	<1.0	<2.0	<1.0	<10
W-17C	2/14/2008	<2	<2	<2	<2	<5	<2	<2	<2	<5	<2	<2	<2	<4	<5	<2	<2	<2	<2	<5	<5	<5	<5	25
	1/16/2009	<2	0.49	1.2	<2	<5	<2	<2	<2	<5	<2	<2	<2	<4	<5	<2	<2	<2	<2	<5	<5	<5	<5	21
	4/23/2009	<2	<2	<2	<2	<5	<2	<2	<2	<5	<2	<2	<2	<4	<5	<2	<2	<2	<2	1.1	<5	<5	<5	18
	3/4/2010	<1.0	<1.0	<1.0	<1.0	<1.0	<0.50	<1.0	<1.0	<1.0	<0.50	<0.50	<0.50	<1.0	<1.0	<1.0	<1.0	<1.0	<1.0	<1.0	<1.0	<2.0	<1.0	<10
	5/12/2010	<1.0	<1.0	<1.0	<1.0	<1.0	<0.50	<1.0	<1.0	<1.0	<0.50	<0.50	<0.50	<1.0	<1.0	<1.0	<1.0	<1.0	<1.0	<1.0	<1.0	<2.0	<1.0	<10
	8/5/2010	<1.0	<1.0	<1.0	<1.0	<1.0	<0.50	<1.0	<1.0	<1.0	<0.50	<0.50	<0.50	<1.0	<1.0	<1.0	<1.0	<1.0	<1.0	<1.0	<1.0	<2.0	<1.0	<10
	11/3/2010	<1.0	<1.0	<1.0	<1.0	<1.0	<0.50	<1.0	<1.0	<1.0	<0.50	<0.50	<0.50	<1.0	<1.0	<1.0	<1.0	<1.0	<1.0	<1.0	<1.0	<2.0	<1.0	<10
	2/2/2011	<1.0	<1.0	<1.0	<1.0	<1.0	<0.50	<1.0	<1.0	<1.0	<0.50	<0.50	<0.50	<1.0	<1.0	<1.0	<1.0	<1.0	<1.0	<1.0	<1.0	<2.0	<1.0	<10
MW-701	2/4/2011	<1.0	4.3	9.5	1.6	1.7	<0.50	<1.0	<1.0	<1.0	<0.50	<0.50	<0.50	<1.0	<1.0	<1.0	<1.0	<1.0	<1.0	<1.0	<1.0	<2.0	<1.0	<10
MW-702	2/4/2011	<1.0	<1.0	<1.0	<1.0	<1.0	<0.50	1.5	<1.0	<1.0	91	0.74	0.92	<1.0	10	66	<1.0	<1.0	42	<1.0	5.2	<2.0	<1.0	<10
MW-703	2/4/2011	<1.0	2.0	18	<1.0	3.6	<0.50	<1.0	1.8	<1.0	33	1.3	5.2	2.8	1.6	1.7	<1.0	<1.0	3.7	<1.0	1.6	<2.0	<1.0	<10
MW-704	2/9/2011	<1.0	2.3	2.5	<1.0	<1.0	38	520	1,200	<1.0	1,800	2,000	610	4,280	26	76	<1.0	1.2	95	<1.0	120	<2.0	210	<10
	2/9/2011	<1.0	<1.0	2.5	<1.0	<1.0	40	550	1,300	<1.0	1,900	2,400	620	4,420	25	71	<1.0	1.3	86	<1.0	96	<2.0	430	<10
MW-705	2/4/2011	<1.0	<1.0	2.0	<1.0	<1.0	<0.50	1.3	<1.0	<1.0	450	3.5	5.1	6.94	8.9	40	<1.0	<1.0	18	<1.0	6.7	<2.0	90	94
MW-706	2/4/2011	<1.0	<1.0	3.6	<1.0	<1.0	<0.50	<1.0	<1.0	<1.0	4.9	0.57	<0.50	<1.0	<1.0	<1.0	<1.0	<1.0	<1.0	<1.0	<1.0	<2.0	4	<10
MW-707	2/4/2011	4.1	8.7	7.0	<1.0	6.9	2.7	7.8	10	<1.0	520	120	7.6	270	6	3.1	<1.0	<1.0	2.2	<1.0	<1.0	<2.0	15	<10
MW-708	2/4/2011	<1.0	<1.0	<1.0	<1.0	<1.0	<0.50	92	2,200	<1.0	1,400	420	3,000	8,113	5.8	38	<1.0	<1.0	20	<1.0	370	<2.0	330	<10
MW-709	2/4/2011	<1.0	<1.0	<1.0	<1.0	<1.0	<0.50	<1.0	<1.0	<1.0	16	1.0	<0.50	5.9	<1.0	<1.0	<1.0	<1.0	<1.0	<1.0	<1.0	<2.0	2.8	<10

TABLE IV
Summary of VOC and Oxygenate Results
Former CENCO Refinery
Santa Fe Springs, CA

Well	Sample Date	PCE	TCE	c1,2-DCE	t1,2-DCE	1,1-DCE	1,2-DCA	1,3,5-TMB	1,2,4-TMB	VC	B	T	E	X	sBUT	nPRO	CBNZ	1,1-DCA	ISO-P	MC	NAP	DIPE	MTBE	TBA
MW-710	2/8/2011	55	93	14	2.9	41	0.81	<1.0	<1.0	1.3	0.84	<0.50	<0.50	<1.0	<1.0	<1.0	<1.0	3.1	<1.0	<1.0	<1.0	<2.0	<1.0	<10
	2/8/2011	54	89	14	2.9	41	<0.50	<1.0	<1.0	1.2	0.75	<0.50	<0.50	<1.0	<1.0	<1.0	<1.0	3.1	<1.0	<1.0	<1.0	<2.0	<1.0	<10
MW-711	2/8/2011	<1.0	8.4	4.5	<1.0	<1.0	<0.50	110	180	7.5	520	440	120	630	18	130	<1.0	<1.0	94	<1.0	260	<2.0	11	<10
MW-712	2/9/2011	<1.0	<1.0	2.6	<1.0	<1.0	<0.50	170	460	<1.0	1,200	520	380	2,190	19	120	<1.0	<1.0	100	<1.0	98	<2.0	23	<10
MW-713	2/9/2011	<1.0	<1.0	2.2	<1.0	<1.0	<0.50	<1.0	<1.0	<1.0	29	<0.50	<0.50	1.7	<1.0	7.2	<1.0	<1.0	3.5	<1.0	<1.0	<2.0	3.5	<10
MW-714	2/14/2011	<1.0	<1.0	<1.0	<1.0	<1.0	<0.50	<1.0	<1.0	<1.0	1.3	<0.50	<0.50	<1.0	4.4	5.4	<1.0	<1.0	14	<1.0	<1.0	<2.0	10	<10
MW-715	2/14/2011	<1.0	<1.0	1.5	<1.0	<1.0	<0.50	4.2	3.6	<1.0	480	12	1.7	31.4	2.2	1	<1.0	<1.0	4.9	<1.0	<1.0	<2.0	2.8	<10

NOTES:
PCE - Tetrachloroethylene
TCE - Trichloroethylene
c1,2-DCE - cis-1,2-Dichloroethene
t1,2-DCE - trans-1,2-Dichloroethene
1,1-DCE - 1,1-Dichloroethene
1,2-DCA - 1,2-Dichloroethane
1,3,5-TMB - 1,3,5-Trimethylbenzene
1,2,4-TMB - 1,2,4-Trimethylbenzene
VC - Vinyl Chloride
B- Benzene
T - Toluene
E - Ethylbenzene
X - Xylenes, total
nBUT - n-Butylbenzene
sBUT - sec-Butylbenzene
tBUT - tert-Butylbenzene
nPRO - n-Propylbenzene
CBNZ - Chlorobenzene
CETH - Chloroethane
CMETH - Chloromethane
1,1 DCA - 1,1-Dichloroethane
ISO-P - Isopropylbenzene
MC - Methylene Chloride
NAP - Naphthalene

TABLE IV
Summary of VOC and Oxygenate Results
Former CENCO Refinery
Santa Fe Springs, CA

Well	Sample Date	PCE	TCE	c1,2-DCE	t1,2-DCE	1,1-DCE	1,2-DCA	1,3,5-TMB	1,2,4-TMB	VC	B	T	E	X	sBUT	nPRO	CBNZ	1,1-DCA	ISO-P	MC	NAP	DIPE	MTBE	TBA

TRIM - Trichlorofluoromethane
PMXY - p/m-Xylenes
OXYL -o-Xylene
DIPE - Diisopropyl Ether (DIPE)
MTBE - Methyl-tert-Butyl Ether (MTBE)
TBA - tert-Butyl Alcohol (TBA)
ND - Not Detected above laboratory detection limits
ug/L - Micrograms per litre
NA - Information not available
- - Not Tested
J - Indicates concentration above method detection limit but below practical quantitation limit

Table V
Summary of Biodegradation Parameters
Former Cenco Refinery
Santa Fe Springs, California
First Quarter 2011

Well ID	Sample Date	Laboratory Analytical Methods						Field Test Methods		
		Methane (mg/L)	Nitrate-N (mg/L)	Sulfate (mg/L)	Total Alkalinity (mg/L as $CaCO_3$)	Ferrous Iron (mg/L)	Sulfide (µg/L)	pH (SU)	DO (mg/L)	ORP (mV)
MW-101	DRY									
MW-103	DRY									
MW-104A	12/18/2009	1.040	0.791	97.2	790	ND	NA	7.3	5.31	3
	3/3/2010	0.888	ND	95.8	790	ND	NA	6.93	1.65	66
	5/11/2010	0.814	ND	78.4	790	0.126	NA	8.06	NA	19
	8/4/2010	92.8	ND<0.5	87	808	ND<0.1	NA	7.65	2.32	205
	11/3/2010	NA	NA	NA	NA	NA	NA	8.06	2.00	131
	2/2/2011	NA	NA	NA	NA	NA	NA	8.46	3.05	136.4
MW-105	DRY									
MW-106A	12/17/2009	NA	NA	NA	NA	NA	NA	7.3	7.29	-112
	3/5/2010	NA	NA	NA	NA	NA	NA	6.73	4.71	116
	5/13/2010	NA	NA	NA	NA	NA	NA	8.06	7.90	-38
	8/6/2010	NA	NA	NA	NA	NA	ND<10	8.05	4.52	210
	11/4/2010	NA	NA	NA	NA	NA	NA	8.23	3.09	77
	2/3/2011	NA	NA	NA	NA	NA	NA	NA	NA	NA
MW-107A	12/17/2009	NA	NA	NA	NA	NA	NA	7.2	6.99	-276
	3/5/2010	NA	NA	NA	NA	NA	NA	8.70	1.81	-307
	5/13/2010	NA	NA	NA	NA	NA	NA	8.30	NA	-370
	8/6/2010	NA	NA	NA	NA	NA	190	8.10	3.25	-280
	11/4/2010	NA	NA	NA	NA	NA	NA	8.16	2.04	-245
	2/3/2011	NA	NA	NA	NA	NA	NA	8.49	3.42	-338
MW-201	DRY									
MW-202	DRY									
MW-203	DRY									

Table V
Summary of Biodegradation Parameters
Former Cenco Refinery
Santa Fe Springs, California
First Quarter 2011

Well ID	Sample Date	Laboratory Analytical Methods						Field Test Methods		
		Methane (mg/L)	Nitrate-N (mg/L)	Sulfate (mg/L)	Total Alkalinity (mg/L as $CaCO_3$)	Ferrous Iron (mg/L)	Sulfide (µg/L)	pH (SU)	DO (mg/L)	ORP (mV)
MW-204	DRY									
MW-205	DRY									
MW-501A	DRY									
MW-502	DRY									
MW-503B	12/15/2009	12.200	ND	274	530	0.361	NA	6.9	7.78	-137
	3/8/2010	4.31	ND	507	450	50.9	NA	7.33	3.38	-96
	5/17/2010	9.98	ND	7.19	760	2.61	NA	8.18	1.79	-69
	8/9/2010	71.8	ND<0.5	10.3	752	ND<0.1	NA	7.60	2.72	147
	11/8/2010	NA	NA	NA	NA	NA	NA	7.62	2.93	7
	2/4/2011	NA	NA	NA	NA	NA	NA	7.96	2.16	-46
MW-504	DRY									
MW-600A	DRY									
MW-601A	DRY									
MW-603	DRY									
MW-604	DRY									
MW-605	DRY									
MW-606	DRY									
MW-607	DRY									
W-1	12/15/2009	NA	NA	NA	NA	NA	NA	7.6	7.10	-39
	3/5/2010	NA	NA	NA	NA	NA	NA	7.51	3.15	-111
	5/13/2010	NA	NA	NA	NA	NA	NA	8.07	2.02	-197
	8/6/2010	NA	NA	NA	NA	NA	ND<10	7.52	3.22	-22
	11/5/2010	NA	NA	NA	NA	NA	NA	8.13	2.75	38
	2/4/2011	NA	NA	NA	NA	NA	NA	8.18	4.84	-63.7

Table V
Summary of Biodegradation Parameters
Former Cenco Refinery
Santa Fe Springs, California
First Quarter 2011

Well ID	Sample Date	Laboratory Analytical Methods						Field Test Methods		
		Methane (mg/L)	Nitrate-N (mg/L)	Sulfate (mg/L)	Total Alkalinity (mg/L as $CaCO_3$)	Ferrous Iron (mg/L)	Sulfide (µg/L)	pH (SU)	DO (mg/L)	ORP (mV)
W-4	12/15/2009	NA	NA	NA	NA	NA	NA	8.3	9.40	21
	3/5/2010	NA	NA	NA	NA	NA	NA	7.09	3.41	-101
	5/13/2010	NA	NA	NA	NA	NA	NA	8.00	3.87	-66
	8/6/2010	NA	NA	NA	NA	NA	ND<10	7.74	3.48	16
	11/4/2010	NA	NA	NA	NA	NA	NA	7.75	3.50	45
	2/8/2011	NA	NA	NA	NA	NA	NA	7.67	5.53	-3.5
W-3A	DRY									
W-7	12/18/2009	NA	NA	NA	NA	NA	NA	NA	NA	NA
	3/4/2010	NA	NA	NA	NA	NA	NA	NA	NA	NA
	5/17/2010	NA	NA	NA	NA	NA	NA	NA	NA	NA
	8/4/2010	NA	NA	NA	NA	NA	NA	NA	NA	NA
	11/3/2010	NA	NA	NA	NA	NA	NA	NA	NA	NA
	2/2/2011	NA	NA	NA	NA	NA	NA	NA	NA	NA
W-8	12/18/2009	NA	NA	NA	NA	NA	NA	10.1	7.07	-230
	3/4/2010	NA	NA	NA	NA	NA	NA	NA	NA	NA
	5/17/2010	NA	NA	NA	NA	NA	NA	NA	NA	NA
	8/4/2010	NA	NA	NA	NA	NA	NA	NA	NA	NA
	11/4/2010	NA	NA	NA	NA	NA	NA	NA	NA	NA
	2/7/2011	NA	NA	NA	NA	NA	NA	NA	NA	NA
W-9	3/3/2010	NA	NA	NA	NA	NA	NA	7.53	5.66	69
	5/12/2010	NA	NA	NA	NA	NA	NA	8.07	7.15	-175
	8/4/2010	NA	NA	NA	NA	NA	NA	7.36	3.36	-60
W-10	11/3/2010	NA	NA	NA	NA	NA	NA	7.53	3.39	-10
	2/2/2011	NA	NA	NA	NA	NA	NA	7.83	3.57	41.6

Table V
Summary of Biodegradation Parameters
Former Cenco Refinery
Santa Fe Springs, California
First Quarter 2011

Well ID	Sample Date	Laboratory Analytical Methods						Field Test Methods		
		Methane (mg/L)	Nitrate-N (mg/L)	Sulfate (mg/L)	Total Alkalinity (mg/L as $CaCO_3$)	Ferrous Iron (mg/L)	Sulfide (µg/L)	pH (SU)	DO (mg/L)	ORP (mV)
W-10	12/18/2009	NA	NA	NA	NA	NA	NA	7.2	6.89	-97
	3/8/2010	NA	NA	NA	NA	NA	NA	NA	NA	NA
	5/17/2010	NA	NA	NA	NA	NA	NA	NA	NA	NA
	8/9/2010	NA	NA	NA	NA	NA	NA	NA	NA	NA
	11/8/2010	NA	NA	NA	NA	NA	NA	NA	NA	NA
	2/8/2011	NA	NA	NA	NA	NA	NA	7.28	5.51	-103
W-11	12/8/2010	NA	NA	NA	NA	NA	NA	NA	NA	NA
	2/4/2011	NA	NA	NA	NA	NA	NA	7.67	5.62	-119
W-12	12/18/2009	NA	NA	NA	NA	NA	NA	7.0	6.96	0
	3/4/2010	NA	NA	NA	NA	NA	NA	7.53	3.15	-63
	5/12/2010	NA	NA	NA	NA	NA	NA	7.87	NA	-180
	8/5/2010	NA	NA	NA	NA	NA	NA	7.61	2.65	-100
	11/4/2010	NA	NA	NA	NA	NA	NA	7.88	2.64	7
	2/3/2011	NA	NA	NA	NA	NA	NA	8.28	2.85	-99
MW-14A	12/15/2009	NA	NA	NA	NA	NA	NA	7.7	7.76	-23
	3/1/2010	NA	NA	NA	NA	NA	NA	6.61	4.09	58
	5/10/2010	NA	NA	NA	NA	NA	NA	8.63	2.74	2
	8/2/2010	NA	NA	NA	NA	NA	NA	8.02	3.12	145
	11/1/2010	NA	NA	NA	NA	NA	NA	8.30	2.87	46
	1/31/2011	NA	NA	NA	NA	NA	NA	8.30	13.16	185.4
MW-14B	12/15/2009	NA	NA	NA	NA	NA	NA	8.4	7.79	97
	3/1/2010	NA	NA	NA	NA	NA	NA	7.72	2.60	-5
	5/10/2010	NA	NA	NA	NA	NA	NA	8.43	3.00	-172
	8/2/2010	NA	NA	NA	NA	NA	NA	7.80	4.60	33

Table V
Summary of Biodegradation Parameters
Former Cenco Refinery
Santa Fe Springs, California
First Quarter 2011

Well ID	Sample Date	Laboratory Analytical Methods						Field Test Methods		
		Methane (mg/L)	Nitrate-N (mg/L)	Sulfate (mg/L)	Total Alkalinity (mg/L as $CaCO_3$)	Ferrous Iron (mg/L)	Sulfide (µg/L)	pH (SU)	DO (mg/L)	ORP (mV)
MW-14B	11/1/2010	NA	NA	NA	NA	NA	NA	8.13	3.37	37
	1/31/2011	NA	NA	NA	NA	NA	NA	8.17	19.82	194
MW-14C	12/15/2009	NA	NA	NA	NA	NA	NA	8.2	8.57	77
	3/1/2010	NA	NA	NA	NA	NA	NA	7.22	2.43	188
	5/10/2010	NA	NA	NA	NA	NA	NA	8.17	0.80	-77
	8/2/2010	NA	NA	NA	NA	NA	NA	7.60	3.55	128
	11/1/2010	NA	NA	NA	NA	NA	NA	7.89	3.15	49
	1/31/2011	NA	NA	NA	NA	NA	NA	7.88	10.85	188
MW-15A	12/14/2009	NA	NA	NA	NA	NA	NA	7.3	9.15	85
	3/2/2010	NA	NA	NA	NA	NA	NA	7.12	2.67	202
	5/10/2010	NA	NA	NA	NA	NA	NA	7.90	NA	-228
	8/2/2010	NA	NA	NA	NA	NA	NA	7.39	1.96	-145
	11/1/2010	NA	NA	NA	NA	NA	NA	7.67	2.85	32
	2/1/2011	NA	NA	NA	NA	NA	NA	7.89	2.05	-33
MW-15B	12/14/2009	NA	NA	NA	NA	NA	NA	7.4	7.44	-58
	3/2/2010	NA	NA	NA	NA	NA	NA	7.61	2.39	94
	5/11/2010	NA	NA	NA	NA	NA	NA	8.09	4.36	-15
	8/3/2010	NA	NA	NA	NA	NA	NA	7.74	3.42	107
	11/2/2010	NA	NA	NA	NA	NA	NA	8.06	3.18	40
	2/1/2011	NA	NA	NA	NA	NA	NA	8.15	4.58	286
MW-15C	12/14/2009	NA	NA	NA	NA	NA	NA	7.2	7.18	-53
	3/2/2010	NA	NA	NA	NA	NA	NA	7.33	2.27	148
	5/11/2010	NA	NA	NA	NA	NA	NA	8.16	4.73	-21
	8/3/2010	NA	NA	NA	NA	NA	NA	7.60	2.72	108

Table V
Summary of Biodegradation Parameters
Former Cenco Refinery
Santa Fe Springs, California
First Quarter 2011

Well ID	Sample Date	Laboratory Analytical Methods						Field Test Methods		
		Methane (mg/L)	Nitrate-N (mg/L)	Sulfate (mg/L)	Total Alkalinity (mg/L as $CaCO_3$)	Ferrous Iron (mg/L)	Sulfide (µg/L)	pH (SU)	DO (mg/L)	ORP (mV)
MW-15C	11/2/2010	NA	NA	NA	NA	NA	NA	7.55	2.40	62
	2/1/2011	NA	NA	NA	NA	NA	NA	7.81	4.58	123.7
MW-16A	12/16/2009	NA	NA	NA	NA	NA	NA	7.6	6.90	-62
	3/5/2010	NA	NA	NA	NA	NA	NA	7.03	3.47	-5
	5/14/2010	NA	NA	NA	NA	NA	NA	8.28	2.23	-54
	8/9/2010	NA	NA	NA	NA	NA	NA	7.98	2.65	106
	11/5/2010	NA	NA	NA	NA	NA	NA	8.03	6.15	48
	2/7/2011	NA	NA	NA	NA	NA	NA	7.82	4.09	249
MW-16B	12/16/2009	NA	NA	NA	NA	NA	NA	8.2	7.61	-184
	3/8/2010	NA	NA	NA	NA	NA	NA	8.15	3.20	-236
	5/14/2010	NA	NA	NA	NA	NA	NA	8.62	0.77	-310
	8/9/2010	NA	NA	NA	NA	NA	NA	8.01	2.88	-217
	11/5/2010	NA	NA	NA	NA	NA	NA	8.30	2.68	-119
	2/7/2011	NA	NA	NA	NA	NA	NA	8.12	3.54	-297
MW-16C	12/16/2009	NA	NA	NA	NA	NA	NA	8.2	7.12	-206
	3/8/2010	NA	NA	NA	NA	NA	NA	8.33	3.64	-237
	5/14/2010	NA	NA	NA	NA	NA	NA	8.68	NA	-295
	8/9/2010	NA	NA	NA	NA	NA	NA	8.02	2.57	-165
	11/5/2010	NA	NA	NA	NA	NA	NA	8.24	2.37	-72
	2/7/2011	NA	NA	NA	NA	NA	NA	8.03	4.34	-285
W-17A	12/18/2009	NA	NA	NA	NA	NA	NA	8.0	7.10	30
	3/3/2010	NA	NA	NA	NA	NA	NA	6.67	5.41	74
	5/12/2010	NA	NA	NA	NA	NA	NA	8.25	0.88	-40
	8/4/2010	NA	NA	NA	NA	NA	NA	7.78	2.35	62

Table V
Summary of Biodegradation Parameters
Former Cenco Refinery
Santa Fe Springs, California
First Quarter 2011

Well ID	Sample Date	Laboratory Analytical Methods						Field Test Methods		
		Methane (mg/L)	Nitrate-N (mg/L)	Sulfate (mg/L)	Total Alkalinity (mg/L as $CaCO_3$)	Ferrous Iron (mg/L)	Sulfide (µg/L)	pH (SU)	DO (mg/L)	ORP (mV)
W-17A	11/3/2010	NA	NA	NA	NA	NA	NA	8.17	2.95	76
	2/2/2011	NA	NA	NA	NA	NA	NA	8.36	5.96	349
W-17B	12/18/2009	NA	NA	NA	NA	NA	NA	8.5	7.18	-173
	3/3/2010	NA	NA	NA	NA	NA	NA	7.87	4.80	-197
	5/12/2010	NA	NA	NA	NA	NA	NA	8.35	NA	-313
	8/5/2010	NA	NA	NA	NA	NA	NA	7.96	2.31	-189
	11/3/2010	NA	NA	NA	NA	NA	NA	8.09	2.56	-25
	2/2/2011	NA	NA	NA	NA	NA	NA	8.43	3.45	-269
W-17C	12/18/2009	NA	NA	NA	NA	NA	NA	8.8	8.74	-177
	3/4/2010	NA	NA	NA	NA	NA	NA	7.96	5.90	-209
	5/12/2010	NA	NA	NA	NA	NA	NA	8.49	3.03	-322
	8/5/2010	NA	NA	NA	NA	NA	NA	8.01	2.64	-167
	11/3/2010	NA	NA	NA	NA	NA	NA	8.16	2.79	-120
	2/2/2011	NA	NA	NA	NA	NA	NA	8.47	3.96	-301
EW-1	2/3/2011	NA	NA	NA	NA	NA	NA	7.90	6.61	-258
MW-701	2/4/2011	NA	NA	NA	NA	NA	NA	6.09	NA	NA
MW-702	2/4/2011	NA	NA	NA	NA	NA	NA	6.04	NA	NA
MW-703	2/4/2011	NA	NA	NA	NA	NA	NA	6.25	NA	NA
MW-704	2/9/2011	NA	NA	NA	NA	NA	NA	6.08	NA	NA
MW-705	2/4/2011	NA	NA	NA	NA	NA	NA	6.01	NA	NA
MW-706	2/4/2011	NA	NA	NA	NA	NA	NA	6.21	NA	NA
MW-707	2/4/2011	NA	NA	NA	NA	NA	NA	6.22	NA	NA
MW-708	2/4/2011	NA	NA	NA	NA	NA	NA	5.99	NA	NA
MW-709	2/4/2011	NA	NA	NA	NA	NA	NA	6.27	NA	NA

Table V
Summary of Biodegradation Parameters
Former Cenco Refinery
Santa Fe Springs, California
First Quarter 2011

Well ID	Sample Date	Laboratory Analytical Methods						Field Test Methods		
		Methane (mg/L)	Nitrate-N (mg/L)	Sulfate (mg/L)	Total Alkalinity (mg/L as $CaCO_3$)	Ferrous Iron (mg/L)	Sulfide (µg/L)	pH (SU)	DO (mg/L)	ORP (mV)
MW-710	2/8/2011	NA	NA	NA	NA	NA	NA	6.18	NA	NA
MW-711	2/8/2011	NA	NA	NA	NA	NA	NA	5.99	NA	NA
MW-712	2/7/2011	NA	NA	NA	NA	NA	NA	6.03	NA	NA
MW-713	2/7/2011	NA	NA	NA	NA	NA	NA	6.13	NA	NA
MW-714	2/8/2011	NA	NA	NA	NA	NA	NA	6.20	NA	NA
MW-715	2/14/2011	NA	NA	NA	NA	NA	NA	7.50	NA	NA

Methane by U.S. EnviroNAental Protection Agency (EPA) Method RSK-175M

Nitrate (as N) and sulfate by EPA Method 300.0

Total alkalinity (as calcium carbonate [$CaCO_3$]) by Standard Method 2320B

Ferrous iron by Standard Method 3500-FeD

NA	not analyzed
NS - I	not sampled - well inaccessible
NS - FP	not sampled - free product present
NS - Dry	not sampled - well is dry
DO	dissolved oxygen
mg/L	milligram(s) per liter
mV	millivolts
ND	not detected at the indicated reporting limit
ORP	oxidation-reduction potential
SU	standard units
*	sulfide was analyzed by SunStar due to the belief that the analyte was responsible for affecting the analytical

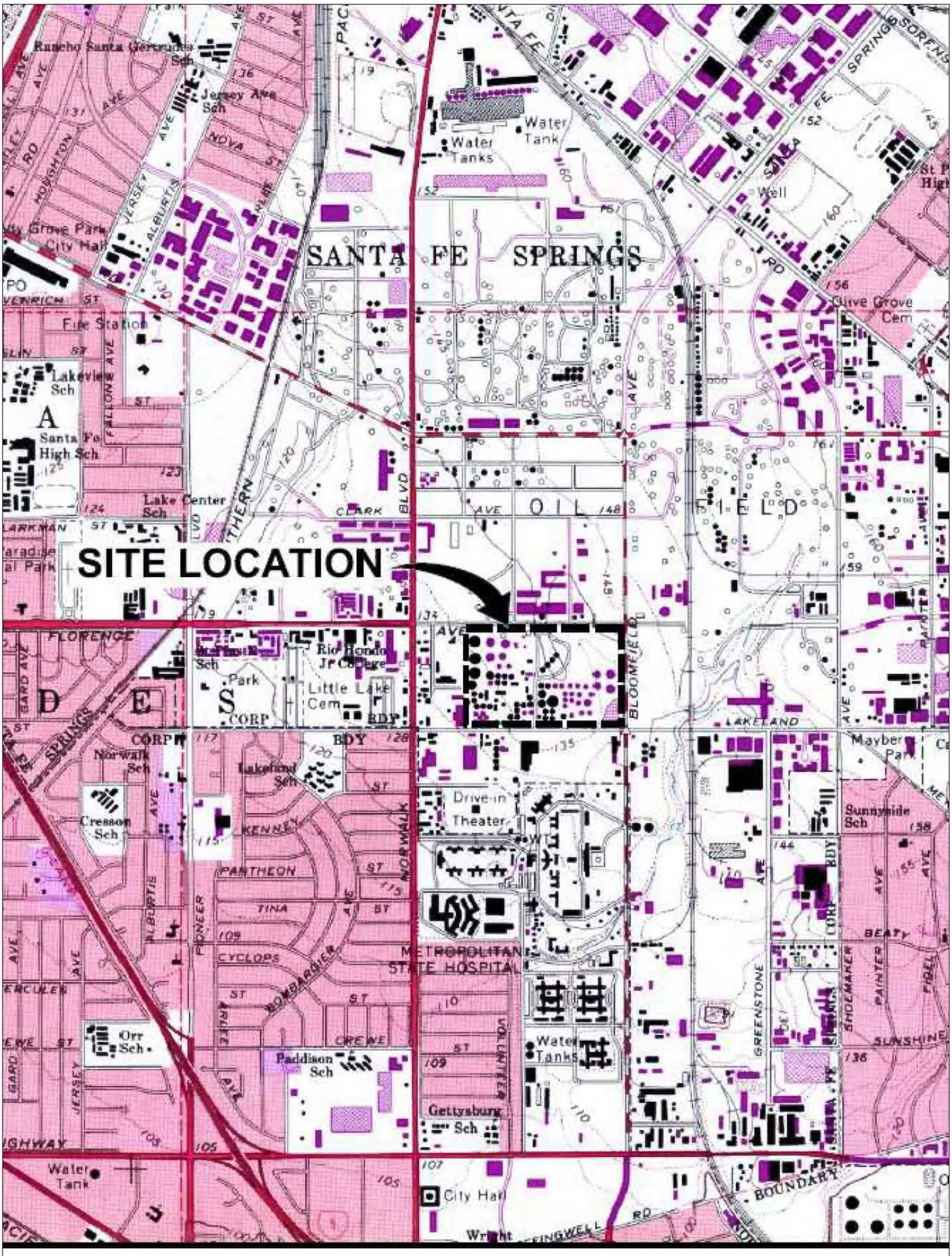

SOURCE OF BASE MAP
U.S. GEOLOGICAL SURVEY, 7.5 MIN QUAD., WHITTIER, CA. 1965, PHOTOREVISED 1981

N
W E
S

SCALE: NOT TO SCALE

DRAWN BY: RLM REVISION DATE: 3/8/11

FORMER CENCO REFINERY
12345 LAKELAND ROAD
SANTA FE SPRINGS, CALIFORNIA

SITE LOCATION MAP

MUREX environmental, inc

FIGURE
1

FX-9 Wells

FX-9 Wells

FX-9 Wells

FX-9 Wells

Appendix A

California Regional Water Quality Control Board
Los Angeles Region

320 W. 4th Street, Suite 200, Los Angeles, California 90013
Phone (213) 576-6600 FAX (213) 576-6640 - Internet Address: http://www.waterboards.ca.gov/losangeles

Linda S. Adams
Cal/EPA Secretary

Arnold Schwarzenegger
Governor

October 21, 2010

Mr. Mike Barranco
Lakeland Development Company
12345 Lakeland Road
Santa Fe Springs, California 90670

SUBJECT: APPROVAL OF WORK PLAN FOR GROUNDWATER INVESTIGATION AND MONITORING, PURSUANT TO CALIFORNIA WATER CODE SECTION 13304 CLEANUP AND ABATEMENT ORDER NO. 97-118

SITE: FORMER POWERINE / CENCO REFINERY, 12345 LAKELAND ROAD, SANTA FE SPRINGS, CALIFORNIA, (SCP NO. 0318A, SITE ID NO. 2040071)

Dear Mr. Barranco:

The California Regional Water Quality Control Board, Los Angeles Region (Regional Board), is the public agency with primary responsibility for the protection of groundwater and surface water quality for all beneficial uses within major portions of Los Angeles and Ventura counties, including the referenced site (Site). To accomplish this, the Regional Board oversees the investigation and cleanup of unregulated discharges adversely affecting the State's water, authorized by the Porter-Cologne Water Quality Control Act (California Water Code [CWC], Division 7).

Regional Board staff have received and reviewed the *Groundwater Investigation & Monitoring Workplan* (Work Plan) for the Site. The Work Plan was prepared and submitted on your behalf by Murex Environmental, and was received by the Regional Board on September 3, 2010. The Work Plan is in response to the Regional Board's July 20, 2010 directive letter pursuant to California Water Code (CWC) section 13304 Cleanup and Abatement Order No. 91-118.

An oil refinery was operated at the Site from the 1930's until 1995 and the surrounding properties are currently used for commercial and industrial purposes. The refinery operations resulted in impact to the subsurface; primarily with petroleum hydrocarbons. The Work Plan provides for improvement of the existing groundwater monitoring program with the installation of 15 groundwater monitoring wells both on- and off-site. The Work Plan is approved as proposed.

Pursuant to section 13304 of the CWC and Order No. 97-118, you are required to submit a technical report, including the investigation and monitoring results, to the Regional Board by **February 24, 2011**, for our review and approval.

The Regional Board requires you to include a perjury statement in all work plans and reports submitted under Cleanup and Abatement Orders. The perjury statement shall be signed by a senior authorized representative at your company (and not by a consultant). The statement shall be in the following format:

"I [NAME], do hereby declare, under penalty of perjury under the laws of the State of California, that I am [JOB TITLE] for [NAME OF RESPONSIBLE PARTY\DISCHARGER], that I am authorized to attest to the veracity of the information contained in the report(s) described herein, and that the information contained in [NAME AND DATE OF REPORT] is true and correct, and that this declaration was executed at [PLACE], [STATE], on [DATE]."

Pursuant to section 13350 of the CWC, failure to submit the required technical report by **February 24, 2011**, or failure to comply with provisions of Cleanup and Abatement Order No. 97-118, may result in civil liability penalties administratively imposed by the Regional Board in an amount up to five thousand dollars ($5,000) for each day the technical report is not received and without further warning.

Should you have any questions related to this project, please telephone Don Indermill, of my staff, at (213) 576-6811, or email him at dindermill@waterboards.ca.gov.

Sincerely,

Samuel Unger, P.E.
Executive Officer

cc: Jeremy Squire, Murex Environmental
Jeff Hawkins, Isola Law Group

Appendix B

WELL PERMIT APPLICATION - NON PRODUCTION WELLS

DRINKING WATER PROGRAM - ENVIRONMENTAL HEALTH DIVISION
5050 COMMERCE DRIVE, BALDWIN PARK, CA 91706 TELE (626) 430-5420 FAX (626) 813-3016

DATE 12-10-10

☑ NEW WELL CONSTRUCTION ☐ RECONSTRUCTION OR RENOVATION ☐ DECOMMISSIONING ☐ OTHER:
☑ MONITORING ☐ CATHODIC ☐ INJECTION ☐ EXTRACTION ☐ HEAT EXCHANGE
☐ HYDROPUNCH ☐ C.P.T. (For Ground Water Sampling) ☐ OTHER:

Site Address: ~~12345 Lakeland Rd/Gelty Dr., Santa Fe Springs~~, CA	City: 90670	Zip Code:
Nearest Intersection: Lakeland / Norwalk	Thomas Guide Map Book Page/Grid: 706-J6	Number of Wells in Each Parcel:
Total Depth of Well: 130 ft	Depth of Well Casing: 130 ft	Sanitary / Annular Sealing Material: Bentonite Chip Seal (Hydrated)
Depth of Sanitary / Annular Seal: 78'		Conductor Casing Seal: Cement-bentonite grout
Owner's Name: Lakeland Dev. c/o Murex Environmental	Telephone Number: (714) 508-0800	
Address: 2640 Walnut Ave, Suite F	City: Tustin, CA	Zip Code: 92780
Driller's Name: WDC Exploration & Wells	Telephone Number: (800) 974-2769	C-57 License Number: 283326
Address: 5566 ARROW HWY, Montclair, CA 91763	City:	Zip Code:
Well Depth ☐ log/records	Method of Well Assessment	Depth and Number of Perforations
Type and Amount of Sealant	Type of Perforator	Size of Perforations	Method of Upper Seal Pressure Application
Company: Murex Environmental, Inc.		
Address: 2640 Walnut Ave, Suite F	City: Tustin	State: CA	Zip Code: 92780
Project Manager: Jeremy R Squire, P.E.	Telephone Number: (714) 508-0800	Fax Number: (714) 508-0880

ATTENTION: WORK PLAN MODIFICATIONS MAY BE REQUIRED IF WELL AND GEOLOGIC CONDITIONS ENCOUNTERED AT THE SITE INSPECTION ARE FOUND TO DIFFER FROM THE SCOPE OF WORK PRESENTED TO THIS DEPARTMENT.

I hereby agree to comply in every respect with all the regulations of the County Environmental Health Division and with all ordinances and laws of the County of Los Angeles and the State of California pertaining to well construction, reconstruction, and decommissioning data deemed necessary by the County Environmental Health Division Of Los Angeles County.

Signature of Applicant: [signature] Printed Name: Jeremy R Squire

THIS PERMIT IS NOT COMPLETE UNTIL ALL OF THE FOLLOWING REQUIREMENTS ARE [illegible] OFF BY THE DEPUTY HEALTH OFFICER. WELL CONSTRUCTION OR DECOMMISSIONING CANNO[illegible] WITHOUT A WORK PLAN APPROVAL FROM THIS DEPARTMENT.

**********(DEPARTMENT USE ONLY)**********

Conditions: On 12-14-10 $1,608 was paid for Permit #891069 to install 8 MW(s) observed work plans submitted. Notify this office at 626-430-5386 or	REHS: Juan Rodriguez [illegible]-16-10 jurodriguez@ph.lacounty.gov 48 hrs prior to the work being done.
	REHS DATE

NOTICE

This well permit approval is limited to compliance with the California Well Standards and the Los Angeles County Code and does not grant any rights to construct, reconstruct, or decommission any well. The applicant is responsible for securing all other necessary permits.

Appendix C

MUREX environmental, inc

BORING LOG

BORING NO. **MW-701**

PROJECT	Well Installation	MEI FILE NO.	1003-001-200
LOCATION	12345 Lakeland Rd, Santa Fe Springs, CA	PROJECT MGR.	Jeremy Squire
CLIENT	Lakeland Development Corp.	FIELD REP.	Jeremy Squire/Frane Sosic
CONTRACTOR	WDC, Montclair, CA	DATE STARTED	12/3/2010
DRILLER	Lead driller: Earnie; Helpers: Ricardo, Bobby	DATE FINISHED	12/6/2010

Elevation 136.87 ft. Datum — Boring Location: West side of Refinery near MW-101

Item	Casing	Sampler	Core Barrel
Type	CFA	S	NA
Inside Diameter (in.)	5-3/4"	2"	NA
Hammer Weight (lb.)	NA	140	
Hammer Fall (in.)	NA	30	

Rig Make & Model: CME 95

- [x] Truck
- [ ] ATV
- [ ] Track
- [ ] Skid
- [ ] Tripod
- [ ] Geoprobe
- [ ] Air Track
- [ ] Hand Auger___
- [x] Cat-Head
- [ ] Winch
- [ ] Roller Bit
- [x] Cutting Head

Hammer Type: [ ] Safety [ ] Doughnut [x] Automatic

Drilling Mud: [ ] Bentonite [ ] Polymer [x] None

Total Depth: 133'

Drilling Notes: Samples for visual-manual ID only

Depth (ft.)	Recovery %	Blow Counts	Sample Depth (ft.)	Well Diagram	PID	USCS Symbol	Visual-Manual Identification & Description (density/consistency, color, GROUP NAME & SYMBOL, maximum particle size*, structure, odor, moisture, optional descriptions, geologic interpretation)	Gravel % Coarse	Gravel % Fine	Sand % Coarse	Sand % Medium	Sand % Fine	% Fines	Field Test Dilatancy	Field Test Toughness	Field Test Plasticity	Field Test Strength
0							3" Road base Hand auger first 5 feet										
5			5'		0 0	ML	Dark brown silt with sand, moist, no odor				5	20	75				
10			10'-11.5'		0 0	SM	Light brown silty sand, moist, no odor					55	45				
15			15'-16.5'		0 0	SM	Light gray silty sand, moist, slight VOC odor					75	25				
20			20'-21.5'		0 0	SM	Olive gray silty sand, moist, no odor				5	75	20				
								C	F	C	M	F	FS	D	T	P	S

Water Level Data

Date	Time	Elapsed Time (hr.)	Depth in feet to: First Water	Depth in feet to: Stabilized Water

Sample ID

CC	Cont. Core
T	Thin Wall Tube
U	Undisturbed Sample
S	Split Spoon Sample
G	Geoprobe

Well Diagram

- Riser Pipe
- Screen
- Filter Sand
- Cuttings
- Grout
- Cuncrete
- Bentonite Seal

Summary

Boring Depth (Linear ft.)	133'
Sample Method	Cal Mod Split Spoon
Number of Samples	
BORING NO.	MW-701

Field Tests

Dilatancy: R - Rapid S - Slow N - None

Toughness: L - Low M - Medium H - High

Plasticity: N - Nonplastic L - Low M - Medium H - High

Dry Strength: N - None L - Low M - Meduim H - High V - Very High

NOTE: Maximum Particle Size is determined by direct observation within the limitations of sampler size.

NOTE: Soil identifications based on ASTM Method D2248 "Standard Practice for Description and Identification of Soils (Visual-Manual Procedure)"

MUREX environmental, inc

BORING LOG

BORING NO.

MW-701

Depth (ft.)	Recovery (%)	Blow Counts	Sample Depth (ft.)	Well Diagram	PID	USCS Symbol	Visual-Manual Identification & Description (density/consistency, color, GROUP NAME & SYMBOL, maximum particle size*, structure, odor, moisture, optional descriptions, geologic interpretation)	Gravel % Coarse	Gravel % Fine	Sand % Coarse	Sand % Medium	Sand % Fine	% Fines	Field Test Dilatancy	Field Test Toughness	Field Test Plasticity	Field Test Strength
20			20'-21 5		0.0	SM	Olive gray silty sand, moist, no odor										
25			25'-26.5'		0.0	SM/ML	Light brown silty sand/sandy silt, moist, no odor					50	50				
30			30'-31.5'		0.0	SM	Brown silty sand, moist, no odor			5	10	50	35				
35			35'-36.5'		0.0	SP-SM	Dark brown poorly graded sand with silt, moist, no odor			25	25	40	10				
40			40'-41.5'		0.0	SM	Dark brown silty sand, moist, no odor			25	25	25	25				
45			45'-46.5'		0.0	SP	Brown poorly graded sand with silt, moist, no odor				10	80	10				
50			50'-51.5'		0.0	SP-SM	Dark brown poorly graded graded sand with silt, moist, no odor			40	40	10	10				
								C	F	C	M	F	FS	D	T	P	S

Field Tests

Dilatancy: R - Rapid S - Slow N - None

Toughness: L - Low M - Medium H - High

Plasticity: N - Nonplastic L - Low M - Medium H - High

Dry Strength: N - None L - Low M - Meduim H - High V - Very High

NOTE: Maximum Particle Size is determined by direct observation within the limitations of sampler size.

NOTE: Soil identifications based on ASTM Method D2248 "Standard Practice for Description and Identification of Soils (Visual-Manual Procedure)"

MUREX environmental, inc

BORING LOG

BORING NO.
MW-701

Depth (ft.)	Recovery (%)	Blow Counts	Sample Depth (ft.)	Well Diagram	PID (PPM)	USCS Symbol	Visual-Manual Identification & Description (density/consistency, color, GROUP NAME & SYMBOL, maximum particle size*, structure, odor, moisture, optional descriptions, geologic interpretation)	Gravel % Coarse	Gravel % Fine	Sand % Coarse	Sand % Medium	Sand % Fine	% Fines	Field Test Dilatancy	Field Test Toughness	Field Test Plasticity	Field Test Strength
50			50'-51.5'		0.0	SP-SM	Dark brown poorly graded sand with silt, moist, no odor										
55			55'-56 5'		0.0	**SW-SM**	Light brown well graded sand with silt, moist, no odor			30	30	30	10				
60			60'-61.5'		0.0	**SW-SM**	SAA			30	30	30	10				
65			65'-66.5'		0.0	**SP-SM**	Light brown poorly graded sand with silt		5	5	20	60	10				
70			70'-71 5'		0.0	**SW-SM**	Light brown well graded sand with silt and gravel	10	10	20	20	30	10				
75			75'-76.5'		**2.9**	**SP-SM**	Olive gray poorly graded sand with silt, moist, VOC odor					90	10				
80			80'-81.5'		0.0	**SP-SM**	SAA					90	10				
								C	F	C	M	F	FS	D	T	P	S

Field Tests
Dilatancy: R - Rapid S - Slow N - None
Toughness: L - Low M - Medium H - High
Plasticity: N - Nonplastic L - Low M - Medium H - High
Dry Strength: N - None L - Low M - Meduim H - High V - Very High

NOTE: Maximum Particle Size is determined by direct observation within the limitations of sampler size.

NOTE: Soil identifications based on ASTM Method D2248 "Standard Practice for Description and Identification of Soils (Visual-Manual Procedure)"

MUREX environmental, inc

BORING LOG

BORING NO.
MW-701

Depth (ft.)	Recovery (%)	Blow Counts	Sample Depth (ft.)	Well Diagram	PID	USCS Symbol	Visual-Manual Identification & Description (density/consistency, color, GROUP NAME & SYMBOL, maximum particle size*, structure, odor, moisture, optional descriptions, geologic interpretation)	Gravel % Coarse	Gravel % Fine	Sand % Coarse	Sand % Medium	Sand % Fine	% Fines	Field Test Dilatancy	Field Test Toughness	Field Test Plasticity	Field Test Strength
80			80'-81.5'		0.0												
85			85'-86.5'		**50.7**	**SP-SM**	Light gray poorly graded sand with silt, moist, strong VOC odor					90	10				
90			90'-91.5'		**9.8**	**SP-SM**	Olive gray poory graded sand with silt, moist, VOC odor			5	5	80	10				
95			95'-96.5'		**2.5**	SP-SM	Dark gray poorly graded sand with silt, moist, VOC odor			5	5	80	10				
100			100'-101.5'		0.0	SM	Greenish gray silty sand, moist, no odor				10	75	15				
105			105'-106.5'		0.0	SM	SAA First water at 106.08				10	75	15				
110			110'-111.5'		**11.1**	SM	Olive gray silty sand, moist, strong VOC odor			5	10	70	15				
								C	F	C	M	F	FS	D	T	P	S

Field Tests
Dilatancy: R - Rapid S - Slow N - None
Toughness: L - Low M - Medium H - High
Plasticity: N - Nonplastic L - Low M - Medium H - High
Dry Strength: N - None L - Low M - Meduim H - High V - Very High

NOTE: Maximum Particle Size is determined by direct observation within the limitations of sampler size.

NOTE: Soil identifications based on ASTM Method D2248 "Standard Practice for Description and Identification of Soils (Visual-Manual Procedure)"

MUREX environmental, inc

BORING LOG

BORING NO.

MW-701

Depth (ft.)	Recovery (%)	Blow Counts	Sample Depth (ft.)	Well Diagram	PID	USCS Symbol	Visual-Manual Identification & Description (density/consistency, color, GROUP NAME & SYMBOL, maximum particle size*, structure, odor, moisture, optional descriptions, geologic interpretation)	Gravel % Coarse	Gravel % Fine	Sand % Coarse	Sand % Medium	Sand % Fine	% Fines	Field Test Dilatancy	Field Test Toughness	Field Test Plasticity	Field Test Strength
110			110'-111.5'		0.0	SM	Olive gray silty sand, moist, strong VOC odor										
115			115'-116.5'		0.0	SM	SAA Possible heaving sands			5	10	70	15				
120			120'-121.5'		0.0	SP-SM	Dark gray poorly graded sand with silt, wet, no odor		5	5	10	70	10				
125			125'-126.5'		0.0	SM	Dark gray silty sand, wet, no odor			5	25	50	20				
130			130'-131.5'		0.0	SM	SAA				20	50	30				
135																	
140																	
								C	F	C	M	F	FS	D	T	P	S

Field Tests

Dilatancy: R - Rapid S - Slow N - None

Toughness: L - Low M - Medium H - High

Plasticity: N - Nonplastic L - Low M - Medium H - High

Dry Strength: N - None L - Low M - Meduim H - High V - Very High

***NOTE: Maximum Particle Size is determined by direct observation within the limitations of sampler size.**

NOTE: Soil identifications based on ASTM Method D2248 "Standard Practice for Description and Identification of Soils (Visual-Manual Procedure)"

MUREX environmental, inc

BORING LOG

BORING NO. **MW-702**

PROJECT	Well Installation	MEI FILE NO.	1003-001-200
LOCATION	12345 Lakeland Rd, Santa Fe Springs, CA	PROJECT MGR.	Jeremy Squire
CLIENT	Lakeland Development Corp.	FIELD REP.	Frane Sosic
CONTRACTOR	WDC, Montclair, CA	DATE STARTED	12/14/2010
DRILLER	Lead driller: Earnie; Helpers: Ricardo, Bobby	DATE FINISHED	12/15/2010

Elevation 140.90 ft. Datum — Boring Location: South side of construction office/300' north of gate 4

Item	Casing	Sampler	Core Barrel
Type	CFA	S	NA
Inside Diameter (in.)	5-3/4"	2"	NA
Hammer Weight (lb.)	NA	140	
Hammer Fall (in.)	NA	30	

Rig Make & Model: ☑ Truck ☐ Tripod ☑ Cat-Head; ☐ ATV ☐ Geoprobe ☐ Winch; ☐ Track ☐ Air Track ☐ Roller Bit; ☐ Skid ☐ Hand Auger___ ☑ Cutting Head; Sonic - Spider

Hammer Type: ☐ Safety ☐ Doughnut ☑ Automatic

Drilling Mud: ☐ Bentonite ☐ Polymer ☑ None

Total Depth: **131'**

Drilling Notes: Samples for visual-manual ID only

Depth (ft.)	Recovery %	Blow Counts	Sample Depth (ft.)	Well Diagram	PID	USCS Symbol	Visual-Manual Identification & Description (density/consistency, color, GROUP NAME & SYMBOL, maximum particle size*, structure, odor, moisture, optional descriptions, geologic interpretation)	Gravel % Coarse	Gravel % Fine	Sand % Coarse	Sand % Medium	Sand % Fine	% Fines	Field Test Dilatancy	Field Test Toughness	Field Test Plasticity	Field Test Strength
0							3" Road base Hand auger first 5 feet										
5	100%	14/21/30	5'		0 0	ML	Dark brown silt with sand, moist, no odor					25	75				
10	100%	10/14/14	10'-11.5'		0 0	ML	Light brown silt with sand, moist, no odor					30	70				
15	80%	4/6/14	15'-16.5'		0 0	SP-SM	Greenish brown poorly graded sand with silt, moist, no odor				10	80	10				
20	90%	11/25/31	20'-21.5'		0 0	ML	Olive gray sandy silt, moist, no odor				5	35	60				
								C	F	C	M	F	FS	D	T	P	S

Water Level Data

Date	Time	Elapsed Time (hr.)	Depth in feet to: First Water	Depth in feet to: Stabilized Water

Sample ID

CC	Cont. Core
T	Thin Wall Tube
U	Undisturbed Sample
S	Split Spoon Sample
G	Geoprobe

Well Diagram

Riser Pipe, Screen, Filter Sand, Cuttings, Grout, Cuncrete, Bentonite Seal

Summary

Boring Depth (Linear ft.)	131'
Sample Method	Cal Mod Split Spoon
Number of Samples	
BORING NO.	MW-702

Field Tests

Dilatancy: R - Rapid S - Slow N - None
Toughness: L - Low M - Medium H - High
Plasticity: N - Nonplastic L - Low M - Medium H - High
Dry Strength: N - None L - Low M - Meduim H - High V - Very High

NOTE: Maximum Particle Size is determined by direct observation within the limitations of sampler size.

NOTE: Soil identifications based on ASTM Method D2248 "Standard Practice for Description and Identification of Soils (Visual-Manual Procedure)"

MUREX environmental, inc

BORING LOG

BORING NO.

MW-702

Depth (ft.)	Recovery (%)	Blow Counts	Sample Depth (ft.)	Well Diagram	PID	USCS Symbol	Visual-Manual Identification & Description (density/consistency, color, GROUP NAME & SYMBOL, maximum particle size*, structure, odor, moisture, optional descriptions, geologic interpretation)	Gravel % Coarse	Gravel % Fine	Sand % Coarse	Sand % Medium	Sand % Fine	% Fines	Field Test Dilatancy	Field Test Toughness	Field Test Plasticity	Field Test Strength
20	90%	11/25/31	20'-21 5		0.0	ML											
25	70%	21/35/40	25'-26.5'		3.2	SP-SM	Light gray poorly graded sand with silt,dry, no odor				20	70	10				
30	100%	9/13/20	30'-31.5'		0.0	ML	Light brown sandy silt with gray mottling, moist, no odor				5	25	70				
35	100%	15/18/23	35'-36.5'		0.0	ML	Yellowish brown sandy silt with gray and amber mottling, moist, no odor					30	70				
40	90%	18/21/32	40'-41.5'		0.0	ML	Light greenish gray sandy silt, moist, no odor					20	80				
45	80%	13/26/33	45'-46.5'		0.0	SM	Olive gray silty sand, moist, no odor				5	50	45				
50	75%	19/37/50	50'-51.5'		0.0	SP	Light gray poorly graded sand, moist, no odor				25	70	5				
								C	F	C	M	F	FS	D	T	P	S

Field Tests Dilatancy: R - Rapid S - Slow N - None Plasticity: N - Nonplastic L - Low M - Medium H - High
Toughness: L - Low M - Medium H - High Dry Strength: N - None L - Low M - Meduim H - High V - Very High

NOTE: Maximum Particle Size is determined by direct observation within the limitations of sampler size.

NOTE: Soil identifications based on ASTM Method D2248 "Standard Practice for Description and Identification of Soils (Visual-Manual Procedure)"

MUREX environmental, inc

BORING LOG

BORING NO.
MW-702

Depth (ft.)	Recovery (%)	Blow Counts	Sample Depth (ft.)	Well Diagram	PID	USCS Symbol	Visual-Manual Identification & Description (density/consistency, color, GROUP NAME & SYMBOL, maximum particle size*, structure, odor, moisture, optional descriptions, geologic interpretation)	Gravel % Coarse	Gravel % Fine	Sand % Coarse	Sand % Medium	Sand % Fine	% Fines	Field Test Dilatancy	Field Test Toughness	Field Test Plasticity	Field Test Strength
50	75%	19/37/50	50'-51.5'		0.0	SP											
55	60%	19/27/35	55'-56.5'		0.0	**SP**	Light gray poorly graded sand, moist, no odor			5	75	15	5				
60	90%	21/29/33	60'-61.5'		0.0	**ML**	Dark gray sandy silt, moist, 'tar-like' odor				5	25	70				
65	45%	20/30/37	65'-66 5'		0.0	**SP-SM**	Light gray poorly sorted sand with silt with dark gray non-VOC staining, rounded to subrounded fine gravels, moist, non-VOC odor		5	5	20	60	10				
70	40%	12/30/39	70'-71 5'		0.0	**SP**	Light gray poorly graded sand with subrounded fine gravels, moist, slight non-VOC odor		5	5	75	15					
75	35%	12/15/28	75'-76.5'		0.0	**SP**	Gray poorly graded sand with silt with subrounded to subangular gravels, moist, slight non-VOC odor		5	15	60	15	5				
80	25%	50-4"	80'-81.5'		0.0	**SP**	Olive gray poorly graded sand with silt, moist, slight odor			5	60	30	5				
								C	F	C	M	F	FS	D	T	P	S

Field Tests
Dilatancy: R - Rapid S - Slow N - None
Toughness: L - Low M - Medium H - High
Plasticity: N - Nonplastic L - Low M - Medium H - High
Dry Strength: N - None L - Low M - Meduim H - High V - Very High

NOTE: Maximum Particle Size is determined by direct observation within the limitations of sampler size.

NOTE: Soil identifications based on ASTM Method D2248 "Standard Practice for Description and Identification of Soils (Visual-Manual Procedure)"

MUREX environmental, inc

BORING LOG

BORING NO.
MW-702

Depth (ft.)	Recovery (%)	Blow Counts	Sample Depth (ft.)	Well Diagram	PID	USCS Symbol	Visual-Manual Identification & Description (density/consistency, color, GROUP NAME & SYMBOL, maximum particle size*, structure, odor, moisture, optional descriptions, geologic interpretation)	Gravel % Coarse	Gravel % Fine	Sand % Coarse	Sand % Medium	Sand % Fine	% Fines	Field Test Dilatancy	Field Test Toughness	Field Test Plasticity	Field Test Strength
80	25%	50-4"	80'-81.5'		0.0												
85	40%	22/50+	85'-86.5'		0.0	**SP-SM**	Olive to dark gray poorly sorted sand with silt, moist, slight odor				10	80	10				
90	45%	50-5"	90'-91.5'		**38.7**	**SP-SM**	Dark graypoorly graded sand with silt, moist, VOC odor	3	7	10	60	15	5				
95	40%	30/50+	95'-96.5'		**450.0**	SP-SM	Dark gray poorly graded sand with silt, moist, strong hydrocarbon odor		10	10	60	15	10				
100	50%	29/50+	100'-101.5'		**67.0**	SP	Dark gray poorly graded sand with gravels	5	10	20	50	10	5				
105	35%	20/50+	105'-106.5'		**1.7**	SP	Dark gray poorly graded sand, moist, slight hydrocarbon odor				20	75	5				
							First water at 108' - 109' bgs										
110	70%	20/43/50	110'-111.5'		0.0	SP	Dark gray poorly graded sand, wet, slight odor			5	60	30	5				
								C	F	C	M	F	FS	D	T	P	S

Field Tests
Dilatancy: R - Rapid S - Slow N - None
Toughness: L - Low M - Medium H - High
Plasticity: N - Nonplastic L - Low M - Medium H - High
Dry Strength: N - None L - Low M - Meduim H - High V - Very High

NOTE: Maximum Particle Size is determined by direct observation within the limitations of sampler size.

NOTE: Soil identifications based on ASTM Method D2248 "Standard Practice for Description and Identification of Soils (Visual-Manual Procedure)"

MUREX environmental, inc

BORING LOG

BORING NO.
MW-702

Depth (ft.)	Recovery (%)	Blow Counts	Sample Depth (ft.)	Well Diagram	PID	USCS Symbol	Visual-Manual Identification & Description (density/consistency, color, GROUP NAME & SYMBOL, maximum particle size*, structure, odor, moisture, optional descriptions, geologic interpretation)	Gravel % Coarse	Gravel % Fine	Sand % Coarse	Sand % Medium	Sand % Fine	% Fines	Field Test Dilatancy	Field Test Toughness	Field Test Plasticity	Field Test Strength
110	70%	20/43/50	110'-111.5'		0.0												
115	100%	13/18/23	115'-116.5'		0.0	SP	Dark gray poorly sorted sand, wet, slight odor Possible heaving sands		3	12	50	30	5				
120	90%	NA	120'-121.5'		0.0	SP	SAA		3	17	50	25	5				
125	90%	NA	125'-126.5'		0.0	SP	SAA		3	17	50	25	5				
130	80%	NA	130'-131.5'		0.0	SP	SAA		3	17	60	15	5				
135																	
140																	
								C	F	C	M	F	FS	D	T	P	S

Field Tests
Dilatancy: R - Rapid S - Slow N - None
Toughness: L - Low M - Medium H - High
Plasticity: N - Nonplastic L - Low M - Medium H - High
Dry Strength: N - None L - Low M - Meduim H - High V - Very High

***NOTE: Maximum Particle Size is determined by direct observation within the limitations of sampler size.**

NOTE: Soil identifications based on ASTM Method D2248 "Standard Practice for Description and Identification of Soils (Visual-Manual Procedure)"

MUREX environmental, inc

BORING LOG

BORING NO. **MW-703**

PROJECT	Well Installation	MEI FILE NO.	1003-001-200
LOCATION	12345 Lakeland Rd, Santa Fe Springs, CA	PROJECT MGR.	Jeremy Squire
CLIENT	Lakeland Development Corp.	FIELD REP.	Robert Hess/Frane Sosic
CONTRACTOR	WDC, Montclair, CA	DATE STARTED	12/8/2010
DRILLER	Lead driller: Earnie; Helpers: Ricardo, Bobby	DATE FINISHED	12/15/2010

Elevation 134.73 ft. Datum — Boring Location: Southwest corner of Refinery near MW-201

Item	Casing	Sampler	Core Barrel
Type	CFA	S	NA
Inside Diameter (in.)	5-3/4"	2"	NA
Hammer Weight (lb.)	NA	140	
Hammer Fall (in.)	NA	30	

Rig Make & Model: CME 95

- [x] Truck
- [ ] ATV
- [ ] Track
- [ ] Skid
- [ ] Tripod
- [ ] Geoprobe
- [ ] Air Track
- [ ] Hand Auger___
- [x] Cat-Head
- [ ] Winch
- [ ] Roller Bit
- [x] Cutting Head

Hammer Type: [ ] Safety [ ] Doughnut [x] Automatic

Drilling Mud: [ ] Bentonite [ ] Polymer [x] None

Total Depth: 130'

Drilling Notes: Samples for visual-manual ID only

Depth (ft.)	Recovery %	Blow Counts	Sample Depth (ft.)	Well Diagram	PID	USCS Symbol	Visual-Manual Identification & Description (density/consistency, color, GROUP NAME & SYMBOL, maximum particle size*, structure, odor, moisture, optional descriptions, geologic interpretation)	Gravel % Coarse	Gravel % Fine	Sand % Coarse	Sand % Medium	Sand % Fine	% Fines	Field Test Dilatancy	Field Test Toughness	Field Test Plasticity	Field Test Strength
0						ML	Dirt cover Hand auger first 5 feet Black silts first five feet					20	80				
5	100%	20/50+	5'		0 0	ML	Dark brown silt with sand, moist, no odor				5	20	75				
10	95%	9/12/25	10'-11.5'		0 0	SP-SM	2.5Y 6/3 Light gray poorly sorted sand with silt, dry, no odor				10	80	10				
15	95%	7/32/44	15'-16.5'		0 0	SP-SM	SAA				10	80	10				
20	95%	15/20/37	20'-21.5'		0 0	SP	5Y 6/2 Light olive gray poorly graded sand, moist, no odor				5	90	5				
								C	F	C	M	F	FS	D	T	P	S

Water Level Data

Date	Time	Elapsed Time (hr.)	Depth in feet to: First Water	Depth in feet to: Stabilized Water

Sample ID

- CC Cont. Core
- T Thin Wall Tube
- U Undisturbed Sample
- S Split Spoon Sample
- G Geoprobe

Well Diagram

- Riser Pipe
- Screen
- Filter Sand
- Cuttings
- Grout
- Cuncrete
- Bentonite Seal

Summary

Boring Depth (Linear ft.)	130'
Sample Method	Cal Mod Split Spoon
Number of Samples	
BORING NO.	MW-703

Field Tests

Dilatancy: R - Rapid S - Slow N - None

Toughness: L - Low M - Medium H - High

Plasticity: N - Nonplastic L - Low M - Medium H - High

Dry Strength: N - None L - Low M - Meduim H - High V - Very High

NOTE: Maximum Particle Size is determined by direct observation within the limitations of sampler size.

NOTE: Soil identifications based on ASTM Method D2248 "Standard Practice for Description and Identification of Soils (Visual-Manual Procedure)"

MUREX environmental, inc

BORING LOG

BORING NO.
MW-703

Depth (ft.)	Recovery (%)	Blow Counts	Sample Depth (ft.)	Well Diagram	PID	USCS Symbol	Visual-Manual Identification & Description (density/consistency, color, GROUP NAME & SYMBOL, maximum particle size*, structure, odor, moisture, optional descriptions, geologic interpretation)	Gravel % Coarse	Gravel % Fine	Sand % Coarse	Sand % Medium	Sand % Fine	% Fines	Field Test Dilatancy	Field Test Toughness	Field Test Plasticity	Field Test Strength
20	95%	15/20/37	20'-21 5		0.0												
25	95%	6/10/20	25'-26.5'		0.0	ML	5Y 4/3 Olive sandy silt, moist, no odor				5	45	50				
30	95%	23/30/50	30'-31.5'		2.8	ML	5Y 4/2 Olive gray sandy silt, moist, no odor					40	60				
					5.0		Black "asphalt-like"staining at 33.5'										
35	95%	13/15/21	35'-36.5'		0.0	ML	5Y 4/1 Dark gray silt, moist, no odor					10	90				
40	15%	8/10/15	40'-41.5'		15.8	SP-SM	5Y 4/2 Olive gray poorly graded sand with silt, moist, slight odor			5	40	45	10				
45	25%	15/32/50+	45'-46.5'		3.8	SP	5Y 4/2 Olive gray poorly graded sand, moist, slight odor			5	70	20	5				
50	95%	50+	50'-51.5'		8.6	SP	5Y 6/2 Light olive gray poorly graded sand, moist, slight odor			10	80	10					
								C	F	C	M	F	FS	D	T	P	S

Field Tests
Dilatancy: R - Rapid S - Slow N - None
Toughness: L - Low M - Medium H - High
Plasticity: N - Nonplastic L - Low M - Medium H - High
Dry Strength: N - None L - Low M - Meduim H - High V - Very High

NOTE: Maximum Particle Size is determined by direct observation within the limitations of sampler size.

NOTE: Soil identifications based on ASTM Method D2248 "Standard Practice for Description and Identification of Soils (Visual-Manual Procedure)"

MUREX environmental, inc

BORING LOG

BORING NO.
MW-703

Depth (ft.)	Recovery (%)	Blow Counts	Sample Depth (ft.)	Well Diagram	PID (PPM)	USCS Symbol	Visual-Manual Identification & Description (density/consistency, color, GROUP NAME & SYMBOL, maximum particle size*, structure, odor, moisture, optional descriptions, geologic interpretation)	Gravel % Coarse	Gravel % Fine	Sand % Coarse	Sand % Medium	Sand % Fine	% Fines	Field Test Dilatancy	Field Test Toughness	Field Test Plasticity	Field Test Strength
50	95%	50+	50'-51.5'		8.6												
55	95%	30/50+	55'-56.5'		0.3	ML	7.5Y 4/6 10YR 3/4 Gradual color change in sample core 2.5Y 2/3 Silt					10	90				
60	95%	50+	60'-61.5'		0.0	SP	5Y 5/8, poorly graded sand				70	20	5				
65	95%	27/29/40	65'-66 5'		0.4	SW-SM	Staining: amber band 1/4" thick normal to core 2.5Y 6/1 gray well graded sand with silt and gravels, subrounded gravels <1" max size, sand subangular		30	25	20	15	10				
70	95%	10/20/43	70'-71 5'		0.4	SM	2.5Y 5/1 gray silty sand, subangular				15	70	15				
75	30%	9/15/33	75'-76.5'		0.1	SP	Olive gray poorly graded sand with silt, moist, VOC odor					90	10				
80	0%	10/28/43	80'-81.5'		NA		No Recovery										
								C	F	C	M	F	FS	D	T	P	S

Field Tests
Dilatancy: R - Rapid S - Slow N - None
Toughness: L - Low M - Medium H - High
Plasticity: N - Nonplastic L - Low M - Medium H - High
Dry Strength: N - None L - Low M - Meduim H - High V - Very High

NOTE: Maximum Particle Size is determined by direct observation within the limitations of sampler size.

NOTE: Soil identifications based on ASTM Method D2248 "Standard Practice for Description and Identification of Soils (Visual-Manual Procedure)"

MUREX environmental, inc

BORING LOG

BORING NO.
MW-703

Depth (ft.)	Recovery (%)	Blow Counts	Sample Depth (ft.)	Well Diagram	PID	USCS Symbol	Visual-Manual Identification & Description (density/consistency, color, GROUP NAME & SYMBOL, maximum particle size*, structure, odor, moisture, optional descriptions, geologic interpretation)	Gravel % Coarse	Gravel % Fine	Sand % Coarse	Sand % Medium	Sand % Fine	% Fines	Field Test Dilatancy	Field Test Toughness	Field Test Plasticity	Field Test Strength
80	0%	10/28/43	80'-81.5'		NA												
85	30%	19/50+	85'-86.5'		0.0	**SP-SM**	Grey poorly graded sand with silt, moist, no odor				15	75	10				
90	30%	42/50+	90'-91.5'		0.0	**SW-SM**	Grey well graded sand with silt, moist, no odor			30	40	20	10				
95	50%	40/50+	95'-96.5'		0.0	SW	Gray well graded sand, moist, no odor		5	40	40	10	5				
100	60%	45/50+	100'-101.5'		0.0	SP	Gray poorly graded sand, moist, no odor	5		15	65	10	5				
							First water at ~104										
105	30%	24/50+	105'-106.5'		**15.2**	SP	Gray poorly graded sand with gravel, wet, hydrocarbon odor	10	25	40	20	5					
110	100%	10/15/45	110'-111.5'		**17.4**	SP	SAA	10	25	40	20	5					
								C	F	C	M	F	FS	D	T	P	S

Field Tests
Dilatancy: R - Rapid S - Slow N - None
Toughness: L - Low M - Medium H - High
Plasticity: N - Nonplastic L - Low M - Medium H - High
Dry Strength: N - None L - Low M - Meduim H - High V - Very High

NOTE: Maximum Particle Size is determined by direct observation within the limitations of sampler size.

NOTE: Soil identifications based on ASTM Method D2248 "Standard Practice for Description and Identification of Soils (Visual-Manual Procedure)"

MUREX environmental, inc

BORING LOG

BORING NO.

MW-703

Depth (ft.)	Recovery (%)	Blow Counts	Sample Depth (ft.)	Well Diagram	PID	USCS Symbol	Visual-Manual Identification & Description (density/consistency, color, GROUP NAME & SYMBOL, maximum particle size*, structure, odor, moisture, optional descriptions, geologic interpretation)	Gravel % Coarse	Gravel % Fine	Sand % Coarse	Sand % Medium	Sand % Fine	% Fines	Field Test Dilatancy	Field Test Toughness	Field Test Plasticity	Field Test Strength
110	100%	10/15/45	110'-111.5'		**17.4**		SAA	10	25	40	20	5					
						SP	111' Gray poorly graded sand, wet , mild hydrocarbon odor		5	20	65	10					
115	100%	14/20/39	115'-116.5'		**1.8**	SP	Gray poorly graded sand, wet, mild odor		5	5	80	10					
120	100%	10/17/21	120'-121.5'		**74.1**	SP	Gray poorly graded sand, wet, strong odor		5	5	80	10					
125	100%	10/17/20	125'-126.5'		**5.5**	ML	Gray sandy silt, moist, mild odor				5	40	55				
130	75%	8/11/13	130'-131.5'		**8.5**	ML	SAA				5	40	55				
135																	
140																	
								C	F	C	M	F	FS	D	T	P	S

Field Tests

Dilatancy: R - Rapid S - Slow N - None

Toughness: L - Low M - Medium H - High

Plasticity: N - Nonplastic L - Low M - Medium H - High

Dry Strength: N - None L - Low M - Meduim H - High V - Very High

***NOTE: Maximum Particle Size is determined by direct observation within the limitations of sampler size.**

NOTE: Soil identifications based on ASTM Method D2248 "Standard Practice for Description and Identification of Soils (Visual-Manual Procedure)"

MUREX environmental, inc

BORING LOG

BORING NO. **MW-704**

PROJECT	Well Installation	MEI FILE NO.	1003-001-200
LOCATION	12345 Lakeland Rd, Santa Fe Springs, CA	PROJECT MGR.	Jeremy Squire
CLIENT	Lakeland Development Corp.	FIELD REP.	Robert Hess/Frane Sosic
CONTRACTOR	WDC, Montclair, CA	DATE STARTED	12/6/2010
DRILLER	Lead driller: Earnie; Helpers: Ricardo, Bobby	DATE FINISHED	12/7/2010

Elevation 137.93 ft. Datum — Boring Location: Lakeland Rd Loading Rack near MW-504

Item	Casing	Sampler	Core Barrel
Type	CFA	S	NA
Inside Diameter (in.)	5-3/4"	2"	NA
Hammer Weight (lb.)	NA	140	
Hammer Fall (in.)	NA	30	

Rig Make & Model: CME 95

- [x] Truck
- [ ] ATV
- [ ] Track
- [ ] Skid
- [ ] Tripod
- [ ] Geoprobe
- [ ] Air Track
- [ ] Hand Auger___
- [x] Cat-Head
- [ ] Winch
- [ ] Roller Bit
- [x] Cutting Head

Hammer Type: [ ] Safety [ ] Doughnut [x] Automatic

Drilling Mud: [ ] Bentonite [ ] Polymer [x] None

Total Depth: 130'

Drilling Notes: Continuous Core

Depth (ft.)	Recovery %	Blow Counts	Sample Depth (ft.)	Well Diagram	PID	USCS Symbol	Visual-Manual Identification & Description (density/consistency, color, GROUP NAME & SYMBOL, maximum particle size*, structure, odor, moisture, optional descriptions, geologic interpretation)	Gravel % Coarse	Gravel % Fine	Sand % Coarse	Sand % Medium	Sand % Fine	% Fines	Field Test Dilatancy	Field Test Toughness	Field Test Plasticity	Field Test Strength
0							Asphalt cover Hand auger first 5 feet										
5	80%	NA	5'-10'		0 0	ML	10YR 4/5, moist, no odor					20	80				
10	80%	NA	10'-15'		0 0	ML	SAA Color change at 11' to 2.5Y 5/2, same lithology					20	80				
15	90%	NA	15'-20'		0 0	ML	SAA					20	80				
							17' - 18' more consolidated section with vigorous reaction to HCl, poss. Caliche										
						SM	5Y 6/2 Light olive gray silty sand, moist, no odor					80	20				
20	90%	NA	20'-25'		0 0		Losing sand, picking up more silts										
								C	F	C	M	F	FS	D	T	P	S

Water Level Data

Date	Time	Elapsed Time (hr.)	Depth in feet to: First Water	Depth in feet to: Stabilized Water

Sample ID

- CC Cont. Core
- T Thin Wall Tube
- U Undisturbed Sample
- S Split Spoon Sample
- G Geoprobe

Well Diagram

- Riser Pipe
- Screen
- Filter Sand
- Cuttings
- Grout
- Cuncrete
- Bentonite Seal

Summary

Boring Depth (Linear ft.)	130'
Sample Method	Cal Mod Split Spoon
Number of Samples	
BORING NO.	MW-704

Field Tests

Dilatancy: R - Rapid S - Slow N - None
Toughness: L - Low M - Medium H - High
Plasticity: N - Nonplastic L - Low M - Medium H - High
Dry Strength: N - None L - Low M - Meduim H - High V - Very High

NOTE: Maximum Particle Size is determined by direct observation within the limitations of sampler size.

NOTE: Soil identifications based on ASTM Method D2248 "Standard Practice for Description and Identification of Soils (Visual-Manual Procedure)"

MUREX environmental, inc

BORING LOG

BORING NO.

MW-704

Depth (ft.)	Recovery (%)	Blow Counts	Sample Depth (ft.)	Well Diagram	PID	USCS Symbol	Visual-Manual Identification & Description (density/consistency, color, GROUP NAME & SYMBOL, maximum particle size*, structure, odor, moisture, optional descriptions, geologic interpretation)	Gravel % Coarse	Gravel % Fine	Sand % Coarse	Sand % Medium	Sand % Fine	% Fines	Field Test Dilatancy	Field Test Toughness	Field Test Plasticity	Field Test Strength
20	90%	NA	20'-25		0.0												
						ML	5Y 5/2 sandy silt, moist, no odor					30	70	R	L	M	L
25	80%	NA	25'-30'		0.0	SM	5Y 4/2 Olive gray silty sand, moist, no odor				5	65	30				
30	100%	NA	30'-35'		0.0	SM	SAA										
						ML	10Y 4/3 sandy silt, moist, slight odor				5	25	70				
35	60%	NA	35'-40'		**9.0**	**SP**	2.5Y 4/3 poorly graded sand, moist, no odor				5	90	5				
40	50%	NA	40'-45'		**6.2**	ML	5Y 4/2 Olive gray silt, moist, slight odor					10	90				
						SP	5Y 6/3 poorly graded sand, moist, slight odor			5	80	10	5				
45	50%	NA	45'-50'		**8.6**	SW	5Y 6/3 well graded sand, moist, slight odor				45	50	5				
50	60%	NA	50'-55'		**9.5**	SW	SAA			10	50	35	5				
								C	F	C	M	F	FS	D	T	P	S

Field Tests

Dilatancy: R - Rapid S - Slow N - None

Toughness: L - Low M - Medium H - High

Plasticity: N - Nonplastic L - Low M - Medium H - High

Dry Strength: N - None L - Low M - Meduim H - High V - Very High

NOTE: Maximum Particle Size is determined by direct observation within the limitations of sampler size.

NOTE: Soil identifications based on ASTM Method D2248 "Standard Practice for Description and Identification of Soils (Visual-Manual Procedure)"

MUREX environmental, inc

BORING LOG

BORING NO. **MW-704**

Depth (ft.)	Recovery (%)	Blow Counts	Sample Depth (ft.)	Well Diagram	PID (PPM)	USCS Symbol	Visual-Manual Identification & Description (density/consistency, color, GROUP NAME & SYMBOL, maximum particle size*, structure, odor, moisture, optional descriptions, geologic interpretation)	Gravel % Coarse	Gravel % Fine	Sand % Coarse	Sand % Medium	Sand % Fine	% Fines	Field Test Dilatancy	Field Test Toughness	Field Test Plasticity	Field Test Strength
50	60%	NA	50'-55'		9.5												
55	75%	NA	55'-60'		270	ML	5Y 5/2 silt, moist, strong odor					5	95				
60	60%	NA	60'-65'		214	ML	SAA					40	60				
						SP	5Y 6/2 poorly graded sand, moist, strong odor				10	85	5				
65	60%	NA	65'-70'		227	SP	SAA				15	80	5				
					445		Staining: 3" dark gray band normal to core										
					434		Staining: 1" dark gray band normal to core										
70	50%	NA	70'-75'		170	SW	5Y 6/2 well graded sand, moist, strong odor				35	60	5				
75	50%	NA	75'-80'			SW	SAA				45	50	5				
							Staining: 1/4" amber band normal to core										
80	50%	NA	80'-85'			SW	SAA				45	50	5				
								C	F	C	M	F	FS	D	T	P	S

Field Tests

Dilatancy: R - Rapid S - Slow N - None
Toughness: L - Low M - Medium H - High
Plasticity: N - Nonplastic L - Low M - Medium H - High
Dry Strength: N - None L - Low M - Meduim H - High V - Very High

NOTE: Maximum Particle Size is determined by direct observation within the limitations of sampler size.

NOTE: Soil identifications based on ASTM Method D2248 "Standard Practice for Description and Identification of Soils (Visual-Manual Procedure)"

MUREX environmental, inc

BORING LOG

BORING NO.
MW-704

Depth (ft.)	Recovery (%)	Blow Counts	Sample Depth (ft.)	Well Diagram	PID	USCS Symbol	Visual-Manual Identification & Description (density/consistency, color, GROUP NAME & SYMBOL, maximum particle size*, structure, odor, moisture, optional descriptions, geologic interpretation)	Gravel % Coarse	Gravel % Fine	Sand % Coarse	Sand % Medium	Sand % Fine	% Fines	Field Test Dilatancy	Field Test Toughness	Field Test Plasticity	Field Test Strength
80	50%	NA	80'-85'														
85	50%	NA	85'-90'		49.4	SP	5Y 6/2 poorly graded sand, moist, hydrocarbon odor				35	60	5				
90	50%	NA	90'-95'		417	SP	SAA				30	65	5				
95	50%	NA	95'-100'		318	SW	5Y 6/1 well graded sand, moist, hydrocarbon odor				45	50	5				
100	50%	NA	100'-105'		423	SP	5Y 5/1 poorly graded sand, moist, hydrocarbon odor		5	60	30	5					
105	50%	NA	105'-110'		376	SP	5Y 5/1 poorly graded sand with gravel, moist, hydrocarbon odor	10	25	40	20	5					
									5	50	40	5					
							First water at ~109.5										
110	50%	NA	110'-115'		298	SP	5Y 3/1 poorly graded sand, wet, hydrocarbon odor			20	75	5					
								C	F	C	M	F	FS	D	T	P	S

Field Tests
Dilatancy: R - Rapid S - Slow N - None
Toughness: L - Low M - Medium H - High
Plasticity: N - Nonplastic L - Low M - Medium H - High
Dry Strength: N - None L - Low M - Meduim H - High V - Very High

NOTE: Maximum Particle Size is determined by direct observation within the limitations of sampler size.

NOTE: Soil identifications based on ASTM Method D2248 "Standard Practice for Description and Identification of Soils (Visual-Manual Procedure)"

MUREX environmental, inc

BORING LOG

BORING NO.

MW-704

Depth (ft.)	Recovery (%)	Blow Counts	Sample Depth (ft.)	Well Diagram	PID	USCS Symbol	Visual-Manual Identification & Description (density/consistency, color, GROUP NAME & SYMBOL, maximum particle size*, structure, odor, moisture, optional descriptions, geologic interpretation)	Gravel % Coarse	Gravel % Fine	Sand % Coarse	Sand % Medium	Sand % Fine	% Fines	Field Test Dilatancy	Field Test Toughness	Field Test Plasticity	Field Test Strength
110	50%	NA	110'-115'		**298**	SP	5Y 3/1 poorly graded sand, wet, strong odor			20	75	5					
115	70%	NA	115'-120'		**702**	SP	SAA, angular to subangular grains			20	75	5					
120	70%	NA	120'-125'		**38.6**	ML	Gley1 3/5G silt, moist, staining					5	95	S		M	M
							124' Staining ends										
125	60%	NA	125'-130'		0.0	ML	5Y 5/3 silt, dry, no odor					5	95	S		M	M
						SP	5Y 3/1 poorly graded sand, wet, no odor		5	60	30	5					
130					0.0	SP	SAA										
135																	
140																	
								C	F	C	M	F	FS	D	T	P	S

Field Tests

Dilatancy: R - Rapid S - Slow N - None

Toughness: L - Low M - Medium H - High

Plasticity: N - Nonplastic L - Low M - Medium H - High

Dry Strength: N - None L - Low M - Meduim H - High V - Very High

***NOTE: Maximum Particle Size is determined by direct observation within the limitations of sampler size.**

NOTE: Soil identifications based on ASTM Method D2248 "Standard Practice for Description and Identification of Soils (Visual-Manual Procedure)"

MUREX environmental, inc

BORING LOG

BORING NO. **MW-705**

PROJECT	Well Installation	MEI FILE NO.	1003-001-200
LOCATION	12345 Lakeland Rd, Santa Fe Springs, CA	PROJECT MGR.	Jeremy Squire
CLIENT	Lakeland Development Corp.	FIELD REP.	Frane Sosic
CONTRACTOR	WDC, Montclair, CA	DATE STARTED	12/13/2010
DRILLER	Lead driller: Earnie; Helpers: Ricardo, Bobby	DATE FINISHED	12/14/2010

Elevation 139.16 ft. Datum — Boring Location: Refinery near MW-202

Item	Casing	Sampler	Core Barrel
Type	CFA	S	NA
Inside Diameter (in.)	5-3/4"	2"	NA
Hammer Weight (lb.)	NA	140	
Hammer Fall (in.)	NA	30	

Rig Make & Model: CME 95

- [x] Truck
- [ ] ATV
- [ ] Track
- [ ] Skid
- [ ] Tripod
- [ ] Geoprobe
- [ ] Air Track
- [ ] Hand Auger___
- [x] Cat-Head
- [ ] Winch
- [ ] Roller Bit
- [x] Cutting Head

Hammer Type: [ ] Safety [ ] Doughnut [x] Automatic

Drilling Mud: [ ] Bentonite [ ] Polymer [x] None

Total Depth: 130'

Drilling Notes: Samples for visual-manual ID only

Depth (ft.)	Recovery %	Blow Counts	Sample Depth (ft.)	Well Diagram	PID	USCS Symbol	Visual-Manual Identification & Description (density/consistency, color, GROUP NAME & SYMBOL, maximum particle size*, structure, odor, moisture, optional descriptions, geologic interpretation)	Gravel % Coarse	Gravel % Fine	Sand % Coarse	Sand % Medium	Sand % Fine	% Fines	Field Test Dilatancy	Field Test Toughness	Field Test Plasticity	Field Test Strength
0							Dirt cover Hand auger first 5 feet										
5	100%	10/12/2013	5'		0 0	ML	Dark brown silt with sand, moist, no odor					30	70				
10	90%	6/7/8	10'-11.5'		0 0	SP-SM	Light brown poorly graded sand with silt, moist, no odor				5	85	10				
15	80%	25/30/38	15'-16.5'		0 0	SP	Olive gray poorly graded sand, moist, no odor				5	90	5				
20	70%	17/26/35	20'-21.5'		0 0	SP-SM	Olive gray poorly graded sand with silt, moist, no odor				10	80	10				
								C	F	C	M	F	FS	D	T	P	S

Water Level Data

Date	Time	Elapsed Time (hr.)	Depth in feet to: First Water	Depth in feet to: Stabilized Water

Sample ID

- CC Cont. Core
- T Thin Wall Tube
- U Undisturbed Sample
- S Split Spoon Sample
- G Geoprobe

Well Diagram

- Riser Pipe
- Screen
- Filter Sand
- Cuttings
- Grout
- Cuncrete
- Bentonite Seal

Summary

Boring Depth (Linear ft.)	130'
Sample Method	Cal Mod Split Spoon
Number of Samples	
BORING NO.	MW-705

Field Tests

Dilatancy: R - Rapid S - Slow N - None
Toughness: L - Low M - Medium H - High
Plasticity: N - Nonplastic L - Low M - Medium H - High
Dry Strength: N - None L - Low M - Meduim H - High V - Very High

NOTE: Maximum Particle Size is determined by direct observation within the limitations of sampler size.

NOTE: Soil identifications based on ASTM Method D2248 "Standard Practice for Description and Identification of Soils (Visual-Manual Procedure)"

MUREX environmental, inc

BORING LOG

BORING NO.

MW-705

Depth (ft.)	Recovery (%)	Blow Counts	Sample Depth (ft.)	Well Diagram	PID	USCS Symbol	Visual-Manual Identification & Description (density/consistency, color, GROUP NAME & SYMBOL, maximum particle size*, structure, odor, moisture, optional descriptions, geologic interpretation)	Gravel % Coarse	Gravel % Fine	Sand % Coarse	Sand % Medium	Sand % Fine	% Fines	Field Test Dilatancy	Field Test Toughness	Field Test Plasticity	Field Test Strength
20	70%	12/26/35	20'-21 5		0.0												
25	70%	29/50+	25'-26.5'		0.0	SP	Light gray poorly graded sand, dry, no odor				75	20	5				
30	60%	11/25/27	30'-31.5'		0.0	SP	Dark gray poorly graded sand, moist, no odor 32'-34' more consolidated section with vigorous reaction to HCl			5	80	10	5				
35	95%	9/20/24	35'-36.5'		0.0	ML	5Y 4/1 Dark gray sandy silt, moist, no odor				5	25	70				
40	80%	12/21/32	40'-41.5'		0.0	ML	SAA				5	30	65				
45	65%	12/25/30	45'-46.5'		0.0	SP	Dark gray poorly graded sand, moist, no odor			5	80	10	5				
50	30%		50'-51.5'		0.0	SP	SAA			5	80	10	5				
								C	F	C	M	F	FS	D	T	P	S

Field Tests

Dilatancy: R - Rapid S - Slow N - None

Toughness: L - Low M - Medium H - High

Plasticity: N - Nonplastic L - Low M - Medium H - High

Dry Strength: N - None L - Low M - Meduim H - High V - Very High

NOTE: Maximum Particle Size is determined by direct observation within the limitations of sampler size.

NOTE: Soil identifications based on ASTM Method D2248 "Standard Practice for Description and Identification of Soils (Visual-Manual Procedure)"

MUREX environmental, inc

BORING LOG

BORING NO.
MW-705

Depth (ft.)	Recovery (%)	Blow Counts	Sample Depth (ft.)	Well Diagram	PID (PPM)	USCS Symbol	Visual-Manual Identification & Description (density/consistency, color, GROUP NAME & SYMBOL, maximum particle size*, structure, odor, moisture, optional descriptions, geologic interpretation)	Gravel % Coarse	Gravel % Fine	Sand % Coarse	Sand % Medium	Sand % Fine	% Fines	Field Test Dilatancy	Field Test Toughness	Field Test Plasticity	Field Test Strength
50	30%		50'-51.5'		0.0	SP											
55	65%		55'-56.5'		0.0	**SP**	Olive gray poorly graded sand, dry, no odor 2.5Y 2/3				80	15	5				
60	50%	13/31/38	60'-61.5'		0.0	**SP**	Gray poorly graded sand, dry, no odor			5	75	15	5				
65	70%	21/29/38	65'-66.5'		0.0	**SP**	Olive gray poorly graded sand, moist, no odor			5	75	15	5				
70	55%	28/45/45	70'-71 5'		0.0	**SP**	Dark gray poorly graded sand, moist, slight tar odor		5	10	60	20	5				
75	60%	20/37/50+	75'-76.5'		0.0	**SP**	Gray poorly graded sand, moist, slight tar odor			10	65	20	5				
80	70%	7/20/30	80'-81.5'		0.0	**ML**	Dark olive gray sandy silt, moist, no odor				5	30	65				
								C	F	C	M	F	FS	D	T	P	S

Field Tests
Dilatancy: R - Rapid S - Slow N - None
Toughness: L - Low M - Medium H - High
Plasticity: N - Nonplastic L - Low M - Medium H - High
Dry Strength: N - None L - Low M - Meduim H - High V - Very High

NOTE: Maximum Particle Size is determined by direct observation within the limitations of sampler size.

NOTE: Soil identifications based on ASTM Method D2248 "Standard Practice for Description and Identification of Soils (Visual-Manual Procedure)"

MUREX environmental, inc

BORING LOG

BORING NO.
MW-705

Depth (ft.)	Recovery (%)	Blow Counts	Sample Depth (ft.)	Well Diagram	PID	USCS Symbol	Visual-Manual Identification & Description (density/consistency, color, GROUP NAME & SYMBOL, maximum particle size*, structure, odor, moisture, optional descriptions, geologic interpretation)	Gravel % Coarse	Gravel % Fine	Sand % Coarse	Sand % Medium	Sand % Fine	% Fines	Field Test Dilatancy	Field Test Toughness	Field Test Plasticity	Field Test Strength
80	70%	7/20/30	80'-81.5'		0.0												
85	85%	19/33/38	85'-86.5'		0.0	**ML**	Greenish gray silt with sand, moist, no odor					25	75				
90	40%	17/31/50	90'-91.5'		**199**	**ML**	Dark gray sandy silt, moist, strong odor, noticeable staining				5	25	75				
95	20%	16/32/50	95'-96.5'		**151**	SP-SM	Dark gray poorly graded sand with silt, moist, strong odor, noticeable staining			5	60	25	10				
100	75%	9/50+	100'-101.5'		**1734**	ML	Dark gray sandy silt, moist, strong odor		5	5	5	15	70				
105	100%	19/37/32	105'-106.5'		**2.9**	ML	Greenish/olive gray silt with sand, moist, slight odor					25	75				
							First water at ~109										
110	90%	9/19/30	110'-111.5'		0.0	ML	Dark gray sandy silt, wet, no odor			5	5	20	70				
								C	F	C	M	F	FS	D	T	P	S

Field Tests
Dilatancy: R - Rapid S - Slow N - None
Toughness: L - Low M - Medium H - High
Plasticity: N - Nonplastic L - Low M - Medium H - High
Dry Strength: N - None L - Low M - Meduim H - High V - Very High

NOTE: Maximum Particle Size is determined by direct observation within the limitations of sampler size.

NOTE: Soil identifications based on ASTM Method D2248 "Standard Practice for Description and Identification of Soils (Visual-Manual Procedure)"

MUREX environmental, inc

BORING LOG

BORING NO.

MW-705

Depth (ft.)	Recovery (%)	Blow Counts	Sample Depth (ft.)	Well Diagram	PID	USCS Symbol	Visual-Manual Identification & Description (density/consistency, color, GROUP NAME & SYMBOL, maximum particle size*, structure, odor, moisture, optional descriptions, geologic interpretation)	Gravel % Coarse	Gravel % Fine	Sand % Coarse	Sand % Medium	Sand % Fine	% Fines	Field Test Dilatancy	Field Test Toughness	Field Test Plasticity	Field Test Strength
110	90%	9/19/30	110'-111.5'		0.0	ML	Dark gray sandy silt, wet, no odor			5	5	20	70				
115	90%	8/17/20	115'-116.5'		0.0	SP	Dark gray poorly graded sand, wet, no odor		5	5	60	25	5				
120	80%	10/16/50	120'-121.5'		0.0	SP	SAA		5	10	70	10	5				
125	70%		125'-126.5'		0.0	SP	SAA		5	25	55	10	5				
130	80%		130'-131.5'		0.0	SP	SAA		10	50	30	10					
135	90%		133.5-135		0.0	SP	SAA		10	50	30	10					
140																	
								C	F	C	M	F	FS	D	T	P	S

Field Tests

Dilatancy: R - Rapid S - Slow N - None

Toughness: L - Low M - Medium H - High

Plasticity: N - Nonplastic L - Low M - Medium H - High

Dry Strength: N - None L - Low M - Meduim H - High V - Very High

***NOTE: Maximum Particle Size is determined by direct observation within the limitations of sampler size.**

NOTE: Soil identifications based on ASTM Method D2248 "Standard Practice for Description and Identification of Soils (Visual-Manual Procedure)"

MUREX environmental, inc

BORING LOG

BORING NO. **MW-706**

PROJECT	Well Installation	MEI FILE NO.	1003-001-200
LOCATION	12345 Lakeland Rd, Santa Fe Springs, CA	PROJECT MGR.	Jeremy Squire
CLIENT	Lakeland Development Corp.	FIELD REP.	Robert Hess/Frane Sosic
CONTRACTOR	WDC, Montclair, CA	DATE STARTED	12/9/2010
DRILLER	Lead driller: Earnie; Helpers: Ricardo, Bobby	DATE FINISHED	12/10/2010

Elevation 139.68 ft. Datum — Boring Location: Refinery near MW-103

Item	Casing	Sampler	Core Barrel
Type	CFA	S	NA
Inside Diameter (in.)	5-3/4"	2"	NA
Hammer Weight (lb.)	NA	140	
Hammer Fall (in.)	NA	30	

Rig Make & Model: CME 95

- [x] Truck
- [ ] ATV
- [ ] Track
- [ ] Skid
- [ ] Tripod
- [ ] Geoprobe
- [ ] Air Track
- [ ] Hand Auger___
- [x] Cat-Head
- [ ] Winch
- [ ] Roller Bit
- [x] Cutting Head

Hammer Type: [ ] Safety [ ] Doughnut [x] Automatic

Drilling Mud: [ ] Bentonite [ ] Polymer [x] None

Total Depth: 132'

Drilling Notes: Samples for visual-manual ID only

Depth (ft.)	Recovery %	Blow Counts	Sample Depth (ft.)	Well Diagram	PID	USCS Symbol	Visual-Manual Identification & Description (density/consistency, color, GROUP NAME & SYMBOL, maximum particle size*, structure, odor, moisture, optional descriptions, geologic interpretation)	Gravel % Coarse	Gravel % Fine	Sand % Coarse	Sand % Medium	Sand % Fine	% Fines	Field Test Dilatancy	Field Test Toughness	Field Test Plasticity	Field Test Strength
0							Dirt cover Hand auger first 5 feet										
5	100%	9/19/2016	5'		1.3	ML	7.5Y 4/3 Brown, moist, no odor					30	70				
10	80%	7/16/20	10'-11.5'		0 0	SP	2.5Y 4/2 Dark garyish brown poorly graded sand, dry, no odor				5	90	5				
15	80%	11/23/50+	15'-16.5'		0 0	SP	2.5Y 6/1 Gray poorly graded sand, subangular-subrounded grains, moist, no odor			10	70	15	5				
20	75%	19/23/33	20'-21.5'		0 0	SP	2.5Y 5/1 Gray poorly graded sand,subangular - subrounded grains dry no odor			5	65	25	5				
								C	F	C	M	F	FS	D	T	P	S

Water Level Data

Date	Time	Elapsed Time (hr.)	Depth in feet to: First Water	Depth in feet to: Stabilized Water

Sample ID

- CC Cont. Core
- T Thin Wall Tube
- U Undisturbed Sample
- S Split Spoon Sample
- G Geoprobe

Well Diagram

- Riser Pipe
- Screen
- Filter Sand
- Cuttings
- Grout
- Cuncrete
- Bentonite Seal

Summary

Boring Depth (Linear ft.)	132'
Sample Method	Cal Mod Split Spoon
Number of Samples	
BORING NO.	MW-706

Field Tests

Dilatancy: R - Rapid S - Slow N - None
Toughness: L - Low M - Medium H - High
Plasticity: N - Nonplastic L - Low M - Medium H - High
Dry Strength: N - None L - Low M - Meduim H - High V - Very High

NOTE: Maximum Particle Size is determined by direct observation within the limitations of sampler size.

NOTE: Soil identifications based on ASTM Method D2248 "Standard Practice for Description and Identification of Soils (Visual-Manual Procedure)"

MUREX environmental, inc

BORING LOG

BORING NO.

MW-706

Depth (ft.)	Recovery (%)	Blow Counts	Sample Depth (ft.)	Well Diagram	PID	USCS Symbol	Visual-Manual Identification & Description (density/consistency, color, GROUP NAME & SYMBOL, maximum particle size*, structure, odor, moisture, optional descriptions, geologic interpretation)	Gravel % Coarse	Gravel % Fine	Sand % Coarse	Sand % Medium	Sand % Fine	% Fines	Field Test Dilatancy	Field Test Toughness	Field Test Plasticity	Field Test Strength
20	75%	19/23/33	20'-21 5		0.0	SP	2.5Y 5/1 Gray poorly graded sand, subangular - subrounded grains dry, no odor			**10**	**70**	**15**	**5**				
25	75%	11/22/38	25'-26.5'		0.0	SP	SAA			5	75	15	5				
30	100%	13/43/38	30'-31.5'		0.0	ML	5Y 4/2 Olive gray sandy silt, dry, no odor				5	20	75				
35	0%	13/18/21	35'-36.5'		NA		No Recovery: sampler lost down-hole										
40	95%	20/33/38	40'-41.5'		0.0	ML	2.5Y 4/4 Olive brown silt with sand, dry, no odor					25	75				
45	95%	16/20/30	45'-46.5'		0.0	SP	2.5Y 5/6 Light olive brown poorly graded sand, dry, no odor				80	15	5				
50	75%	27/50+	50'-51.5'		0.0	SP	5Y 5/3 Olive poorly graded sand, dry, no odor				65	30	5				
								C	F	C	M	F	FS	D	T	P	S

Field Tests

Dilatancy: R - Rapid S - Slow N - None

Toughness: L - Low M - Medium H - High

Plasticity: N - Nonplastic L - Low M - Medium H - High

Dry Strength: N - None L - Low M - Meduim H - High V - Very High

NOTE: Maximum Particle Size is determined by direct observation within the limitations of sampler size.

NOTE: Soil identifications based on ASTM Method D2248 "Standard Practice for Description and Identification of Soils (Visual-Manual Procedure)"

MUREX environmental, inc

BORING LOG

BORING NO.
MW-706

Depth (ft.)	Recovery (%)	Blow Counts	Sample Depth (ft.)	Well Diagram	PID (PPM)	USCS Symbol	Visual-Manual Identification & Description (density/consistency, color, GROUP NAME & SYMBOL, maximum particle size*, structure, odor, moisture, optional descriptions, geologic interpretation)	Gravel % Coarse	Gravel % Fine	Sand % Coarse	Sand % Medium	Sand % Fine	% Fines	Field Test Dilatancy	Field Test Toughness	Field Test Plasticity	Field Test Strength
50	75%	27/50+	50'-51.5'		0.0	SP	5Y 5/3 Olive poorly graded sand, dry, no odor				65	30	5				
55	75%		55'-56.5'		0.0	**SP**	Gley1 4/10Y poorly graded sand, dry no odor				80	15	5				
60	75%	21/33/41	60'-61.5'		0.0	**SP**	Gley1 5/10Y Greenish gray poorly graded sand, dry, no odor				65	30	5				
65	60%	12/29/50+	65'-66.5'		0.0	**SM**	5Y 4/2 Olive gray silty sand, dry, no odor					60	40				
70	30%	14/50+	70'-71.5'		0.0	**SP**	Gley1 5/5GY Dark greenish gray poorly graded sand				65	30	5				
75	75%	12/29/50+	75'-76.5'		**0.2**	**SP**	Gley1 4/10GY Dark greenish gray poorly graded sand				20	70	10				
80	0%	23/50+	80'-81.5'		NA		No Recovery										
								C	F	C	M	F	FS	D	T	P	S

Field Tests
Dilatancy: R - Rapid S - Slow N - None
Toughness: L - Low M - Medium H - High
Plasticity: N - Nonplastic L - Low M - Medium H - High
Dry Strength: N - None L - Low M - Meduim H - High V - Very High

NOTE: Maximum Particle Size is determined by direct observation within the limitations of sampler size.

NOTE: Soil identifications based on ASTM Method D2248 "Standard Practice for Description and Identification of Soils (Visual-Manual Procedure)"

MUREX environmental, inc

BORING LOG

BORING NO.
MW-706

Depth (ft.)	Recovery (%)	Blow Counts	Sample Depth (ft.)	Well Diagram	PID	USCS Symbol	Visual-Manual Identification & Description (density/consistency, color, GROUP NAME & SYMBOL, maximum particle size*, structure, odor, moisture, optional descriptions, geologic interpretation)	Gravel % Coarse	Gravel % Fine	Sand % Coarse	Sand % Medium	Sand % Fine	% Fines	Field Test Dilatancy	Field Test Toughness	Field Test Plasticity	Field Test Strength
80	0%	23/50+	80'-81.5'		NA		No Recovery										
85	15%	17/50+	85'-86.5'		1.1	SM	10YR 3/6 Dark yellowish brown poorly graded silty sand, dry, no odor				25	50	25				
90	30%	50+	90'-91.5'		0	SW	5Y 5/2 well graded sand with gravels max size 2"	20	20	20	20	20	T				
95	60%	27/50+	95'-96.5'		87.5	SM	Gley1 5/N silty sand, moist, odor				10	70	20				
100	50%	50+	100'-101.5'		0.8	SM	Gley1 4/5G silty sand, moist, slight odor					60	40				
105	75%	50+	105'-106.5'		1.2	SM	SAA					60	40				
							First water at ~110										
110	75%	28/50+	110'-111.5'		0.2	SP	Gley1 3/5G Dark greenish gray poorly graded sand, wet			5	70	20	5				
								C	F	C	M	F	FS	D	T	P	S

Field Tests
Dilatancy: R - Rapid S - Slow N - None
Toughness: L - Low M - Medium H - High
Plasticity: N - Nonplastic L - Low M - Medium H - High
Dry Strength: N - None L - Low M - Meduim H - High V - Very High

NOTE: Maximum Particle Size is determined by direct observation within the limitations of sampler size.

NOTE: Soil identifications based on ASTM Method D2248 "Standard Practice for Description and Identification of Soils (Visual-Manual Procedure)"

MUREX environmental, inc

BORING LOG

BORING NO.
MW-706

Depth (ft.)	Recovery (%)	Blow Counts	Sample Depth (ft.)	Well Diagram	PID	USCS Symbol	Visual-Manual Identification & Description (density/consistency, color, GROUP NAME & SYMBOL, maximum particle size*, structure, odor, moisture, optional descriptions, geologic interpretation)	Gravel % Coarse	Gravel % Fine	Sand % Coarse	Sand % Medium	Sand % Fine	% Fines	Field Test Dilatancy	Field Test Toughness	Field Test Plasticity	Field Test Strength
110	75%	28/50+	110'-111.5'		**0.2**	SP	Gley1 3/5G Dark greenish gray, wet From 110' to 132' color gradually changes from greenish hue to blueish hue			5	70	20	5				
115		NA	115'-116.5'		NA	SP	SAA			5	70	20	5				
120		NA	120'-121.5'		NA	SP	SAA			5	70	20	5				
125		NA	125'-126.5'		NA	SP	Gley2 4/5BG			5	70	20	5				
130		NA	130'-131.5'		NA	ML	Gley2 4/5BG silt, dry, no odor					10	90				
135																	
140																	
								C	F	C	M	F	FS	D	T	P	S

Field Tests
Dilatancy: R - Rapid S - Slow N - None
Toughness: L - Low M - Medium H - High
Plasticity: N - Nonplastic L - Low M - Medium H - High
Dry Strength: N - None L - Low M - Meduim H - High V - Very High

***NOTE: Maximum Particle Size is determined by direct observation within the limitations of sampler size.**

NOTE: Soil identifications based on ASTM Method D2248 "Standard Practice for Description and Identification of Soils (Visual-Manual Procedure)"

MUREX environmental, inc

BORING LOG

BORING NO. **MW-707**

PROJECT	Well Installation	MEI FILE NO.	1003-001-200
LOCATION	12345 Lakeland Rd, Santa Fe Springs, CA	PROJECT MGR.	Jeremy Squire
CLIENT	Lakeland Development Corp.	FIELD REP.	Frane Sosic
CONTRACTOR	WDC, Montclair, CA	DATE STARTED	12/20/2010
DRILLER	Lead driller: Earnie; Helpers: Ricardo, Bobby	DATE FINISHED	12/23/2010

Elevation 128.86 ft. Datum — Boring Location: Getty Drive southeast of MW-503B

Item	Casing	Sampler	Core Barrel
Type	CFA	S	NA
Inside Diameter (in.)	5-3/4"	2"	NA
Hammer Weight (lb.)	NA	140	
Hammer Fall (in.)	NA	30	

Rig Make & Model: CME 95

- [x] Truck
- [ ] ATV
- [ ] Track
- [ ] Skid
- [ ] Tripod
- [ ] Geoprobe
- [ ] Air Track
- [ ] Hand Auger___
- [x] Cat-Head
- [ ] Winch
- [ ] Roller Bit
- [x] Cutting Head

Hammer Type: [ ] Safety [ ] Doughnut [x] Automatic

Drilling Mud: [ ] Bentonite [ ] Polymer [x] None

Total Depth: 135'

Drilling Notes: Samples for visual-manual ID only

Depth (ft.)	Recovery %	Blow Counts	Sample Depth (ft.)	Well Diagram	PID	USCS Symbol	Visual-Manual Identification & Description (density/consistency, color, GROUP NAME & SYMBOL, maximum particle size*, structure, odor, moisture, optional descriptions, geologic interpretation)	Gravel % Coarse	Gravel % Fine	Sand % Coarse	Sand % Medium	Sand % Fine	% Fines	Field Test Dilatancy	Field Test Toughness	Field Test Plasticity	Field Test Strength
0							4" Asphalt Hand auger first 5 feet										
5	100%	7/8/2016	5'		0.0	ML	Light brown silt with sand, moist, no odor					25	75				
10	90%	8/50+	10'-11.5'		0 0	ML	Light garyish brown sandy silt, moist, no odor					30	70				
15	70%	41/50+	15'-16.5'		0 0	SM	Brown silty sand, moist, no odor				5	60	35				
20	75%	23/30/37	20'-21.5'		0 0	SM	Light brown silty sand, moist, no odor				10	70	20				
								C	F	C	M	F	FS	D	T	P	S

Water Level Data

Date	Time	Elapsed Time (hr.)	Depth in feet to: First Water	Depth in feet to: Stabilized Water

Sample ID

CC	Cont. Core
T	Thin Wall Tube
U	Undisturbed Sample
S	Split Spoon Sample
G	Geoprobe

Well Diagram

- Riser Pipe
- Screen
- Filter Sand
- Cuttings
- Grout
- Cuncrete
- Bentonite Seal

Summary

Boring Depth (Linear ft.)	135'
Sample Method	Cal Mod Split Spoon
Number of Samples	
BORING NO.	MW-707

Field Tests

Dilatancy: R - Rapid S - Slow N - None

Toughness: L - Low M - Medium H - High

Plasticity: N - Nonplastic L - Low M - Medium H - High

Dry Strength: N - None L - Low M - Meduim H - High V - Very High

NOTE: Maximum Particle Size is determined by direct observation within the limitations of sampler size.

NOTE: Soil identifications based on ASTM Method D2248 "Standard Practice for Description and Identification of Soils (Visual-Manual Procedure)"

MUREX environmental, inc

BORING LOG

BORING NO.

MW-707

Depth (ft.)	Recovery (%)	Blow Counts	Sample Depth (ft.)	Well Diagram	PID	USCS Symbol	Visual-Manual Identification & Description (density/consistency, color, GROUP NAME & SYMBOL, maximum particle size*, structure, odor, moisture, optional descriptions, geologic interpretation)	Gravel % Coarse	Gravel % Fine	Sand % Coarse	Sand % Medium	Sand % Fine	% Fines	Field Test Dilatancy	Field Test Toughness	Field Test Plasticity	Field Test Strength
20	75%	23/30/37	20'-21 5		0.0	SM	Light brown silty sand, moist, no odor				10	70	20				
25	65%	17/23/28	25'-26.5'		0.0	SM	Olive brown silty sand, moist, no odor				5	65	30				
30	95%	12/17/20	30'-31.5'		**2.3**	ML	Light brown sandy silt, with gray and reddish mottling			3	7	20	70				
35	50%	18/23/32	35'-36.5'		**1.5**	SM	Dark gray silty sand, moist, slight odor				5	80	15				
40	30%	28/50+	40'-41.5'		**1.4**	SP	Light gray poorly graded sand, dry, no odor			5	50	40	5				
						ML	44' Dark gray sandy silt, moist, slight odor				5	40	55				
45	50%	14/21/50	45'-46.5'		**5.9**	SP	Light gray poorly graded sand, moist, slight odor				80	15	5				
						ML	49' Light brown silt with sand, moist, no odor					20	80				
50	40%	25/27/29	50'-51.5'		**18.1**	SP	Gray poorly sorted sand, moist, slight odor		5	20	50	20	5				
								C	F	C	M	F	FS	D	T	P	S

Field Tests

Dilatancy: R - Rapid S - Slow N - None

Toughness: L - Low M - Medium H - High

Plasticity: N - Nonplastic L - Low M - Medium H - High

Dry Strength: N - None L - Low M - Meduim H - High V - Very High

NOTE: Maximum Particle Size is determined by direct observation within the limitations of sampler size.

NOTE: Soil identifications based on ASTM Method D2248 "Standard Practice for Description and Identification of Soils (Visual-Manual Procedure)"

MUREX environmental, inc

BORING LOG

BORING NO.
MW-707

Depth (ft.)	Recovery (%)	Blow Counts	Sample Depth (ft.)	Well Diagram	PID (PPM)	USCS Symbol	Visual-Manual Identification & Description (density/consistency, color, GROUP NAME & SYMBOL, maximum particle size*, structure, odor, moisture, optional descriptions, geologic interpretation)	Gravel % Coarse	Gravel % Fine	Sand % Coarse	Sand % Medium	Sand % Fine	% Fines	Field Test Dilatancy	Field Test Toughness	Field Test Plasticity	Field Test Strength
50	40%	25/27/29	50'-51 5'		18.1	SP	Gray poorly graded sand, moist, slight odor		5	20	50	20	5				
55	90%	23/25/27	55'-56.5'		13.8	SM	Dark gray silty sand, moist, slight odor			2	18	60	20				
60	85%	13/17/20	60'-61.5'		58.9	ML	Light brown sandy silt, moist, slight odor				10	20	70				
65	70%	24/50+	65'-66.5'		42.5	SP-SM	Greenish gray poorly graded sand with silt, moist, slight odor			5	10	75	10				
70	60%	32/50+	70'-71 5'		8.7	SP	Light gray poorly graded sand, moist, no odor			5	50	40	5				
75	35%	35/50+	75'-76.5'		19.6	SP	Olive gray poorly graded sand, moist, slight odor			10	50	35	5				
80	35%	35/50+	80'-81.5'		315	SP	Light gray poorly graded sand, moist, hydrocarbon odor			5	60	30	5				
								C	F	C	M	F	FS	D	T	P	S

Field Tests
Dilatancy: R - Rapid S - Slow N - None
Toughness: L - Low M - Medium H - High
Plasticity: N - Nonplastic L - Low M - Medium H - High
Dry Strength: N - None L - Low M - Meduim H - High V - Very High

NOTE: Maximum Particle Size is determined by direct observation within the limitations of sampler size.

NOTE: Soil identifications based on ASTM Method D2248 "Standard Practice for Description and Identification of Soils (Visual-Manual Procedure)"

MUREX environmental, inc

BORING LOG

BORING NO.
MW-707

Depth (ft.)	Recovery (%)	Blow Counts	Sample Depth (ft.)	Well Diagram	PID	USCS Symbol	Visual-Manual Identification & Description (density/consistency, color, GROUP NAME & SYMBOL, maximum particle size*, structure, odor, moisture, optional descriptions, geologic interpretation)	Gravel % Coarse	Gravel % Fine	Sand % Coarse	Sand % Medium	Sand % Fine	% Fines	Field Test Dilatancy	Field Test Toughness	Field Test Plasticity	Field Test Strength
80	35%	35/50+	80'-81.5'		**315**	SP	Light gray, moist, hydrocarbon odor			5	60	30	5				
85	55%	50+	85'-86.5'		**2000+**	**SP**	Dark gray poorly graded sand, moist, strong odor			10	60	25	5				
90	50%	50+	90'-91.5'		**128**	**SM**	Dark gray silty sand, moist, strong odor				10	60	30				
95	50%	50+	95'-96.5'		**193.6**	SP-SM	Gray poorly graded sand with silt, moist, hydrocarbon odor			10	40	40	10				
100	45%	50+	100'-101.5'		**130.8**	ML	Dark brown sandy silt, moist, hydrocarbon odor				5	40	55				
105	50%	50+	105'-106.5'		**77.4**	SP	Dark gray poorly graded sand, moist, hydrocarbon odor		10	25	40	20	5				
							First water at ~110										
110	60%	8/25/28	110'-111.5'		**84.6**	SP	SAA, wet		15	20	55	10					
								C	F	C	M	F	FS	D	T	P	S

Field Tests
Dilatancy: R - Rapid S - Slow N - None
Toughness: L - Low M - Medium H - High
Plasticity: N - Nonplastic L - Low M - Medium H - High
Dry Strength: N - None L - Low M - Meduim H - High V - Very High

NOTE: Maximum Particle Size is determined by direct observation within the limitations of sampler size.

NOTE: Soil identifications based on ASTM Method D2248 "Standard Practice for Description and Identification of Soils (Visual-Manual Procedure)"

MUREX environmental, inc

BORING LOG

BORING NO.
MW-707

Depth (ft.)	Recovery (%)	Blow Counts	Sample Depth (ft.)	Well Diagram	PID	USCS Symbol	Visual-Manual Identification & Description (density/consistency, color, GROUP NAME & SYMBOL, maximum particle size*, structure, odor, moisture, optional descriptions, geologic interpretation)	Gravel % Coarse	Gravel % Fine	Sand % Coarse	Sand % Medium	Sand % Fine	% Fines	Field Test Dilatancy	Field Test Toughness	Field Test Plasticity	Field Test Strength
110	60%	8/25/28	110'-111.5'		**84.6**	SP	SAA, wet		15	20	55	10					
115	80%	13/19/42	115'-116.5'		**345.0**	SP	Dark gray poorly graded sand, wet, hydrocarbon odor	2	8	50	25	10	5				
120	75%	45/50+	120'-121.5'		**83.5**	ML	Brown sandy silt with red and orange mottling, wet, hydrocarbon odor, dark gray staining				5	35	60				
125	60%	13/15/32	125'-126.5'		**6.1**	ML	Dark gray sandy silt, wet, hydrocarbon odor				5	55	40				
130	60%	50+	130'-131.5'		**6.7**	ML	Olive brown sandy silt, wet, hydrocarbon odor	2	3	2	8	20	65				
135	70%	50+	133.5'-135'		**11.2**	SP-SM	Olive gray poorly graded sand with silt, wet, slight hydrocarbon odor		3	7	60	20	10				
140																	
								C	F	C	M	F	FS	D	T	P	S

Field Tests
Dilatancy: R - Rapid S - Slow N - None
Toughness: L - Low M - Medium H - High
Plasticity: N - Nonplastic L - Low M - Medium H - High
Dry Strength: N - None L - Low M - Meduim H - High V - Very High

***NOTE: Maximum Particle Size is determined by direct observation within the limitations of sampler size.**

NOTE: Soil identifications based on ASTM Method D2248 "Standard Practice for Description and Identification of Soils (Visual-Manual Procedure)"

MUREX environmental, inc

BORING LOG

BORING NO. **MW-708**

PROJECT	Well Installation	MEI FILE NO.	1003-001-200
LOCATION	12345 Lakeland Rd, Santa Fe Springs, CA	PROJECT MGR.	Jeremy Squire
CLIENT	Lakeland Development Corp.	FIELD REP.	Frane Sosic
CONTRACTOR	WDC, Montclair, CA	DATE STARTED	1/11/2011
DRILLER	Lead driller: Earnie; Helpers: Ricardo, Bobby	DATE FINISHED	1/12/2011

Elevation 126.73 ft. Datum — Boring Location: Hospital near MW-601A

Item	Casing	Sampler	Core Barrel
Type	CFA	S	NA
Inside Diameter (in.)	5-3/4"	2"	NA
Hammer Weight (lb.)	NA	140	
Hammer Fall (in.)	NA	30	

Rig Make & Model: CME 95

- [x] Truck
- [ ] ATV
- [ ] Track
- [ ] Skid
- [ ] Tripod
- [ ] Geoprobe
- [ ] Air Track
- [ ] Hand Auger___
- [x] Cat-Head
- [ ] Winch
- [ ] Roller Bit
- [x] Cutting Head

Hammer Type: [ ] Safety [ ] Doughnut [x] Automatic

Drilling Mud: [ ] Bentonite [ ] Polymer [x] None

Total Depth: 130'

Drilling Notes: Samples for visual-manual ID only

Depth (ft.)	Recovery %	Blow Counts	Sample Depth (ft.)	Well Diagram	PID	USCS Symbol	Visual-Manual Identification & Description (density/consistency, color, GROUP NAME & SYMBOL, maximum particle size*, structure, odor, moisture, optional descriptions, geologic interpretation)	Gravel % Coarse	Gravel % Fine	Sand % Coarse	Sand % Medium	Sand % Fine	% Fines	Field Test Dilatancy	Field Test Toughness	Field Test Plasticity	Field Test Strength
0							4" Asphalt Hand auger first 5 feet										
5	95%	10/10/2010	5'		0.2	ML	Brown sandy silt, dry, no odor				5	25	70				
10	90%	18/13/20	10'-11.5'		0.3		Light brown sandy silt, moist, no odor		2	3	5	20	70				
						SP-SM	13'-14' well graded sand with silt and gravels	2	13	20	35	20	10				
15	80%	23/31/31	15'-16.5'		0.6	ML	Light gray sandy silt, moist, no odor, rusty orange mottling					35	65				
20	65%	20/44/48	20'-21.5'		0.5	SM	Light grayish white silty sand, dry, no odor					80	20				
								C	F	C	M	F	FS	D	T	P	S

Water Level Data

Date	Time	Elapsed Time (hr.)	Depth in feet to: First Water	Depth in feet to: Stabilized Water

Sample ID

CC	Cont. Core
T	Thin Wall Tube
U	Undisturbed Sample
S	Split Spoon Sample
G	Geoprobe

Well Diagram

- Riser Pipe
- Screen
- Filter Sand
- Cuttings
- Grout
- Cuncrete
- Bentonite Seal

Summary

Boring Depth (Linear ft.)	130'
Sample Method	Cal Mod Split Spoon
Number of Samples	
BORING NO.	MW-708

Field Tests

Dilatancy: R - Rapid S - Slow N - None
Toughness: L - Low M - Medium H - High
Plasticity: N - Nonplastic L - Low M - Medium H - High
Dry Strength: N - None L - Low M - Meduim H - High V - Very High

NOTE: Maximum Particle Size is determined by direct observation within the limitations of sampler size.

NOTE: Soil identifications based on ASTM Method D2248 "Standard Practice for Description and Identification of Soils (Visual-Manual Procedure)"

MUREX environmental, inc

BORING LOG

BORING NO.

MW-708

Depth (ft.)	Recovery (%)	Blow Counts	Sample Depth (ft.)	Well Diagram	PID	USCS Symbol	Visual-Manual Identification & Description (density/consistency, color, GROUP NAME & SYMBOL, maximum particle size*, structure, odor, moisture, optional descriptions, geologic interpretation)	Gravel % Coarse	Gravel % Fine	Sand % Coarse	Sand % Medium	Sand % Fine	% Fines	Field Test Dilatancy	Field Test Toughness	Field Test Plasticity	Field Test Strength
20	65%	20/44/48	20'-21 5		0.5	SM	Light grayish white silty sand, dry, no odor					80	20				
25	100%	15/24/42	25'-26.5'		16.7	SM	Olive gray silty sand, moist, slight odor, trace coarse and medium sand			2	3	65	30				
30	85%	16/27/40	30'-31.5'		8.6	SM	Gray silty sand, moist, slight odor, trace medium sand				3	77	20				
35	80%	22/31/50	35'-36.5'		16.8	SP-SM	Olive gray poorly graded sand with silt, moist, slight odor					90	10				
40	60%	33/50+	40'-41.5'		0.9	SP-SM	Greenish gray poorly graded sand with silt, moist, slight odor, trace coarse sand and fine subrounded gravel		2	3	5	80	10				
45	65%	20/50+	45'-46.5'		8.7	SP	Light gray poorly graded sand, moist, slight odor			5	70	20	5				
50	70%	33/50+	50'-51.5'		27.4	SM	Yellowish brown silty sand, moist, slight odor					85	15				
								C	F	C	M	F	FS	D	T	P	S

Field Tests

Dilatancy: R - Rapid S - Slow N - None

Toughness: L - Low M - Medium H - High

Plasticity: N - Nonplastic L - Low M - Medium H - High

Dry Strength: N - None L - Low M - Meduim H - High V - Very High

NOTE: Maximum Particle Size is determined by direct observation within the limitations of sampler size.

NOTE: Soil identifications based on ASTM Method D2248 "Standard Practice for Description and Identification of Soils (Visual-Manual Procedure)"

MUREX environmental, inc

BORING LOG

BORING NO.
MW-708

Depth (ft.)	Recovery (%)	Blow Counts	Sample Depth (ft.)	Well Diagram	PID (PPM)	USCS Symbol	Visual-Manual Identification & Description (density/consistency, color, GROUP NAME & SYMBOL, maximum particle size*, structure, odor, moisture, optional descriptions, geologic interpretation)	Gravel % Coarse	Gravel % Fine	Sand % Coarse	Sand % Medium	Sand % Fine	% Fines	Field Test Dilatancy	Field Test Toughness	Field Test Plasticity	Field Test Strength
50	70%	33/50+	50'-51.5'		27.4	SM	Yellowish brown silty sand, moist, slight odor					85	15				
55	75%	17/30/50	55'-56.5'		5.8	SP-SM	Olive gray poorly graded sand with silt, moist, no odor					90	10				
60	55%	50+	60'-61.5'		2.7	SP	Olive gray poorly graded sand					95	5				
65	60%	50+	65'-66.5'		2.5	SP-SM	Very light gray poorly graded sand with silt, moist, no odor		5	15	40	30	10				
70	65%	29/50+	70'-71.5'		3.0	SP-SM	Light gray poorly graded sand with silt, moist, slight odor					90	10				
75	50%	50+	75'-76 5'		56.4	SP-SM	Gray poorly graded sand with silt, moist, hydrocarbon odor		10	10	45	25	10				
80	40%	50+	80'-81 5'		38.2	SP-SM	Olive gray poorly graded sand with silt, moist, hydrocarbon odor					90	10				
								C	F	C	M	F	FS	D	T	P	S

Field Tests
Dilatancy: R - Rapid S - Slow N - None
Toughness: L - Low M - Medium H - High
Plasticity: N - Nonplastic L - Low M - Medium H - High
Dry Strength: N - None L - Low M - Meduim H - High V - Very High

NOTE: Maximum Particle Size is determined by direct observation within the limitations of sampler size.

NOTE: Soil identifications based on ASTM Method D2248 "Standard Practice for Description and Identification of Soils (Visual-Manual Procedure)"

MUREX environmental, inc

BORING LOG

BORING NO.
MW-708

Depth (ft.)	Recovery (%)	Blow Counts	Sample Depth (ft.)	Well Diagram	PID	USCS Symbol	Visual-Manual Identification & Description (density/consistency, color, GROUP NAME & SYMBOL, maximum particle size*, structure, odor, moisture, optional descriptions, geologic interpretation)	Gravel % Coarse	Gravel % Fine	Sand % Coarse	Sand % Medium	Sand % Fine	% Fines	Field Test Dilatancy	Field Test Toughness	Field Test Plasticity	Field Test Strength
80	40%	50+	80'-81.5'		38.2	SP-SM	Olive gray, moist, hydrocarbon odor					90	10				
85	45%	50+	85'-86.5'		83.9	**SP-SM**	Olive gray poorly graded sand with silt, moist, strong odor		10	10	45	25	10				
90	50%	50+	90'-91.5'		133	**SP-SM**	SAA		5	15	40	30	10				
95	10%	50+	95'-96.5'		2255	SP-SM	Dark Gray poorly graded sand with silt, moist, strong hydrocarbon odor		3	12	45	30	10				
100	25%	50+	100'-101.5'		2375	SP	Dark gray poorly graded sand	3	2	10	50	30	5				
105	40%	30/50+	105'-106.5'		2325	ML/SM	First water at ~105 Dark gray sandy silt/silty sand, wet, strong hydrocarbon odor	2	3	10	10	25	50				
110	60%	50+	110'-111.5'		2309	SP-SM	Dark gray poorly graded sand with silt, wet, strong hydrocarbon odor, trace fine gravels		2	8	50	30	10				
								C	F	C	M	F	FS	D	T	P	S

Field Tests
Dilatancy: R - Rapid S - Slow N - None
Toughness: L - Low M - Medium H - High
Plasticity: N - Nonplastic L - Low M - Medium H - High
Dry Strength: N - None L - Low M - Meduim H - High V - Very High

NOTE: Maximum Particle Size is determined by direct observation within the limitations of sampler size.

NOTE: Soil identifications based on ASTM Method D2248 "Standard Practice for Description and Identification of Soils (Visual-Manual Procedure)"

MUREX environmental, inc

BORING LOG

BORING NO.
MW-708

Depth (ft.)	Recovery (%)	Blow Counts	Sample Depth (ft.)	Well Diagram	PID	USCS Symbol	Visual-Manual Identification & Description (density/consistency, color, GROUP NAME & SYMBOL, maximum particle size*, structure, odor, moisture, optional descriptions, geologic interpretation)	Gravel % Coarse	Gravel % Fine	Sand % Coarse	Sand % Medium	Sand % Fine	% Fines	Field Test Dilatancy	Field Test Toughness	Field Test Plasticity	Field Test Strength
110	60%	50+	110'-111.5'		**2309**	SP-SM	Dark gray poorly graded sand with silt, wet, strong hydrocarbon odor, trace fine gravels		2	8	50	30	10				
115	85%	17/20/24	115'-116.5'		**177**	SP-SM	Dark gray poorly graded sand with silt, wet, hydrocarbon odor				5	85	10				
120	95%	20/50+	120'-121.5'		**1769**	SP-SM	Dark gray poorly graded sand with silt, wet, hydrocarbon odor		3	7	50	30	10				
125	90%	17/50+	125'-126.5'		**1184**	SP	Dark gray poorly graded sand, w/trace coarse and fine gravels	2	3	5	50	35	5				
130	95%	8/10/30	130'-131.5'		**2207**	SP	SAA, w/trace fine gravels		2	8	55	30	5				
135																	
140																	
								C	F	C	M	F	FS	D	T	P	S

Field Tests
Dilatancy: R - Rapid S - Slow N - None
Toughness: L - Low M - Medium H - High
Plasticity: N - Nonplastic L - Low M - Medium H - High
Dry Strength: N - None L - Low M - Meduim H - High V - Very High

***NOTE: Maximum Particle Size is determined by direct observation within the limitations of sampler size.**

NOTE: Soil identifications based on ASTM Method D2248 "Standard Practice for Description and Identification of Soils (Visual-Manual Procedure)"

MUREX environmental, inc

BORING LOG

BORING NO. **MW-709**

PROJECT	Well Installation	MEI FILE NO.	1003-001-200
LOCATION	12345 Lakeland Rd, Santa Fe Springs, CA	PROJECT MGR.	Jeremy Squire
CLIENT	Lakeland Development Corp.	FIELD REP.	Frane Sosic
CONTRACTOR	WDC, Montclair, CA	DATE STARTED	1/24/2011
DRILLER	Lead driller: Earnie; Helpers: Ricardo, Bobby	DATE FINISHED	1/25/2011

Elevation 140.48 ft. Datum — Boring Location: Hospital near MW-604

Item	Casing	Sampler	Core Barrel
Type	CFA	S	NA
Inside Diameter (in.)	5-3/4"	2"	NA
Hammer Weight (lb.)	NA	140	
Hammer Fall (in.)	NA	30	

Rig Make & Model: CME 95

- [x] Truck
- [ ] ATV
- [ ] Track
- [ ] Skid
- [ ] Tripod
- [ ] Geoprobe
- [ ] Air Track
- [ ] Hand Auger___
- [x] Cat-Head
- [ ] Winch
- [ ] Roller Bit
- [x] Cutting Head

Hammer Type: [ ] Safety [ ] Doughnut [x] Automatic

Drilling Mud: [ ] Bentonite [ ] Polymer [x] None

Total Depth: 130'

Drilling Notes: Samples for visual-manual ID only

Depth (ft.)	Recovery %	Blow Counts	Sample Depth (ft.)	Well Diagram	PID	USCS Symbol	Visual-Manual Identification & Description (density/consistency, color, GROUP NAME & SYMBOL, maximum particle size*, structure, odor, moisture, optional descriptions, geologic interpretation)	Gravel % Coarse	Gravel % Fine	Sand % Coarse	Sand % Medium	Sand % Fine	% Fines	Field Test Dilatancy	Field Test Toughness	Field Test Plasticity	Field Test Strength
0							4" Asphalt Hand auger first 5 feet										
5	95%	9/14/2016	5'		1.2	ML	5YR 4/4 Reddish brown sandy silt, moist, no odor				5	20	75				
10	100%	11/12/13	10'-11.5'		2.1	SM	10YR 5/6 Yellowish brown silty sand with brown mottling, moist, no odor					85	15				
15	100%	13/27/38	15'-16.5'		1.3	SP-SM	10Y 6/2 Light brownish gray poorly graded sand with silt with orange and rusty mottling, moist, no odor					90	10				
20	80%	20/50+	20'-21.5'		<1.0	SP-SM	10YR 7/1 Light gray poorly graded sand with silt, moist, no odor				30	60	10				
								C	F	C	M	F	FS	D	T	P	S

Water Level Data

Date	Time	Elapsed Time (hr.)	Depth in feet to: First Water	Depth in feet to: Stabilized Water

Sample ID

- CC Cont. Core
- T Thin Wall Tube
- U Undisturbed Sample
- S Split Spoon Sample
- G Geoprobe

Well Diagram

- Riser Pipe
- Screen
- Filter Sand
- Cuttings
- Grout
- Cuncrete
- Bentonite Seal

Summary

Boring Depth (Linear ft.)	130'
Sample Method	Cal Mod Split Spoon
Number of Samples	
BORING NO.	MW-709

Field Tests

Dilatancy: R - Rapid S - Slow N - None

Toughness: L - Low M - Medium H - High

Plasticity: N - Nonplastic L - Low M - Medium H - High

Dry Strength: N - None L - Low M - Meduim H - High V - Very High

NOTE: Maximum Particle Size is determined by direct observation within the limitations of sampler size.

NOTE: Soil identifications based on ASTM Method D2248 "Standard Practice for Description and Identification of Soils (Visual-Manual Procedure)"

MUREX environmental, inc

BORING LOG

BORING NO.

MW-709

Depth (ft.)	Recovery (%)	Blow Counts	Sample Depth (ft.)	Well Diagram	PID	USCS Symbol	Visual-Manual Identification & Description (density/consistency, color, GROUP NAME & SYMBOL, maximum particle size*, structure, odor, moisture, optional descriptions, geologic interpretation)	Gravel % Coarse	Gravel % Fine	Sand % Coarse	Sand % Medium	Sand % Fine	% Fines	Field Test Dilatancy	Field Test Toughness	Field Test Plasticity	Field Test Strength
20	80%	20/50+	20'-21 5		<1.0	SP-SM	10YR 7/1 Light gray, moist, no odor				30	60	10				
25	75%	25/50+	25'-26.5'		<1.0	SP-SM	SAA			5	45	40	10				
30	0%	35/50+	30'-31.5'		NA		No Recovery										
35	80%	15/50+	35'-36.5'		<1.0	SP-SM	10YR 6/2 Light brownish gray poorly graded sand with siltwith trace fine gravels, moist, no odor		3	7	35	45	10				
40	90%	20/30/38	40'-41.5'		<1.0	SP-SM	5Y 7/2 Light gray poorly graded sand with silt, moist, no odor		10	15	35	30	10				
45	85%	18/26/30	45'-46.5'		<1.0	SW	5Y 7/1 Light gray well graded sand with gravels, moist, no odor	5	10	20	30	30	5				
50	70%	28/50+	50'-51.5'		1.5	SP-SM	5Y 7/4 Pale yellow poorly graded sand with silt with brown mottling, moist, no odor		5	10	45	30	10				
								C	F	C	M	F	FS	D	T	P	S

Field Tests

Dilatancy: R - Rapid S - Slow N - None

Toughness: L - Low M - Medium H - High

Plasticity: N - Nonplastic L - Low M - Medium H - High

Dry Strength: N - None L - Low M - Meduim H - High V - Very High

NOTE: Maximum Particle Size is determined by direct observation within the limitations of sampler size.

NOTE: Soil identifications based on ASTM Method D2248 "Standard Practice for Description and Identification of Soils (Visual-Manual Procedure)"

MUREX environmental, inc

BORING LOG

BORING NO.
MW-709

Depth (ft.)	Recovery (%)	Blow Counts	Sample Depth (ft.)	Well Diagram	PID (PPM)	USCS Symbol	Visual-Manual Identification & Description (density/consistency, color, GROUP NAME & SYMBOL, maximum particle size*, structure, odor, moisture, optional descriptions, geologic interpretation)	Gravel % Coarse	Gravel % Fine	Sand % Coarse	Sand % Medium	Sand % Fine	% Fines	Field Test Dilatancy	Field Test Toughness	Field Test Plasticity	Field Test Strength
50	70%	28/50+	50'-51.5'		1.5	SP-SM	5Y 7/4 Pale yellow poorly graded sand with silt with brown mottling, moist, no odor		5	10	45	30	10				
55	70%	25/50+	55'-56.5'		7.5	SP	10YR 6/6 Brownish yellow poorly graded sand with trace fine gravel, moist, no odor		3	7	25	60	5				
60	85%	50+	60'-61 5'		13.3	SP-SM	2.5Y 7/3 Pale yellow poorly graded sand with silt, moist, slight odor			5	25	60	10				
65	75%	50+	65'-66.5'		19.9	SP-SM	2.5Y 6/4 Light yellowish brown poorly graded sand with silt, moist, slight odor			5	40	45	10				
70	100%	25/30/42	70'-71.5'		21.3	SM	Gley1 5/5G Dark greenish gray silty sand, moist, slight odor			3	7	75	15				
75	95%	23/30/50+	75'-76.5'		27.3	SP-SM	Gley1 4/10GY Dark greenish gray poorly graded sand with silt, moist, slight odor				5	85	10				
80	15%	50+	80'-81.5'		7.1	SP-SM	Gley1 6/10BG Greenish gray poorly graded sand with silt, moist, slight odor			10	35	45	10				
								C	F	C	M	F	FS	D	T	P	S

Field Tests
Dilatancy: R - Rapid S - Slow N - None
Toughness: L - Low M - Medium H - High
Plasticity: N - Nonplastic L - Low M - Medium H - High
Dry Strength: N - None L - Low M - Meduim H - High V - Very High

NOTE: Maximum Particle Size is determined by direct observation within the limitations of sampler size.

NOTE: Soil identifications based on ASTM Method D2248 "Standard Practice for Description and Identification of Soils (Visual-Manual Procedure)"

MUREX environmental, inc

BORING LOG

BORING NO.
MW-709

Depth (ft.)	Recovery (%)	Blow Counts	Sample Depth (ft.)	Well Diagram	PID	USCS Symbol	Visual-Manual Identification & Description (density/consistency, color, GROUP NAME & SYMBOL, maximum particle size*, structure, odor, moisture, optional descriptions, geologic interpretation)	Gravel % Coarse	Gravel % Fine	Sand % Coarse	Sand % Medium	Sand % Fine	% Fines	Field Test Dilatancy	Field Test Toughness	Field Test Plasticity	Field Test Strength
80	15%	50+	80'-81.5'		7.1	SP-SM	Gley1 6/10BG Greenish gray, moist, slight odor			10	35	45	10				
85	70%	50+	85'-86.5'		2.8	SP	Gley1 4/5B Dark bluish gray poorly graded sand, moist, slight odor				10	85	5				
90	20%	50+	90'-91.5'		3.6	SP	Gley 7/5B Light bluish gray poorly graded sand, moist, slight odor		5	15	25	50	5				
95	90%	50+	95'-96.5'		4.3	SP	Gley 6/10Y Greenish gray poorly graded sand, moist, slight odor		3	7	25	60	5				
100	80%	50+	100'-101.5'		3.1	SP	Gley 5/5G Greenish gray poorly graded sand, moist, slight odor	5	10	15	25	40	5				
105	90%	15/31/50	105'-106.5'		4.3	SP	Dark greenish gray poorly graded sand, moist, slight odor					90	10				
110	45%	50+	110'-111.5'		60.5	SP	Gley 4/10BG Dark greenish gray poorly graded sand, moist, mild odor				10	85	5				
								C	F	C	M	F	FS	D	T	P	S

Field Tests
Dilatancy: R - Rapid S - Slow N - None
Toughness: L - Low M - Medium H - High
Plasticity: N - Nonplastic L - Low M - Medium H - High
Dry Strength: N - None L - Low M - Meduim H - High V - Very High

NOTE: Maximum Particle Size is determined by direct observation within the limitations of sampler size.

NOTE: Soil identifications based on ASTM Method D2248 "Standard Practice for Description and Identification of Soils (Visual-Manual Procedure)"

MUREX environmental, inc

BORING LOG

BORING NO.
MW-709

Depth (ft.)	Recovery (%)	Blow Counts	Sample Depth (ft.)	Well Diagram	PID	USCS Symbol	Visual-Manual Identification & Description (density/consistency, color, GROUP NAME & SYMBOL, maximum particle size*, structure, odor, moisture, optional descriptions, geologic interpretation)	Gravel % Coarse	Gravel % Fine	Sand % Coarse	Sand % Medium	Sand % Fine	% Fines	Field Test Dilatancy	Field Test Toughness	Field Test Plasticity	Field Test Strength
110	45%	50+	110'-111.5'		**60.5**	SP	Gley 4/10BG Dark greenish gray poorly graded sand, moist, mild odor					85	10				
115	100%	15/30/50+	115'-116.5'		**104**	ML	Gley 5/5BG Greenish gray sandy silt, wet, moderate to strong odor				5	20	75				
120	95%	13/32/50	120'-121.5'		**67.2**	SP-SM	Gley 4/5BG Dark greenish gray poorly graded sand with silt, wet, moderate odor					90	10				
125	70%	17/50+	125'-126.5'		**42.2**	SP	Gley 4/10GY Dark greenish gray poorly graded sand, wet, moderate odor			10	60	25	5				
130	80%	12/23/37	130'-131.5'		**17.1**	SP-SM	Gley 4/5B Dark bluish gray poorly graded sand with silt, wet, slight odor			10	50	30	10				
135																	
140																	
								C	F	C	M	F	FS	D	T	P	S

Field Tests
Dilatancy: R - Rapid S - Slow N - None
Toughness: L - Low M - Medium H - High
Plasticity: N - Nonplastic L - Low M - Medium H - High
Dry Strength: N - None L - Low M - Meduim H - High V - Very High

***NOTE: Maximum Particle Size is determined by direct observation within the limitations of sampler size.**

NOTE: Soil identifications based on ASTM Method D2248 "Standard Practice for Description and Identification of Soils (Visual-Manual Procedure)"

MUREX environmental, inc

BORING LOG

BORING NO. **MW-710**

PROJECT	Well Installation	MEI FILE NO.	1003-001-200
LOCATION	12345 Lakeland Rd, Santa Fe Springs, CA	PROJECT MGR.	Jeremy Squire
CLIENT	Lakeland Development Corp.	FIELD REP.	Frane Sosic
CONTRACTOR	WDC, Montclair, CA	DATE STARTED	1/12/2011
DRILLER	Lead driller: Earnie; Helpers: Ricardo, Bobby	DATE FINISHED	1/13/2011

Elevation 122.15 ft. Datum — Boring Location: Hospital near MW-603

Item	Casing	Sampler	Core Barrel
Type	CFA	S	NA
Inside Diameter (in.)	5-3/4"	2"	NA
Hammer Weight (lb.)	NA	140	
Hammer Fall (in.)	NA	30	

Rig Make & Model: CME 95

- [x] Truck
- [ ] ATV
- [ ] Track
- [ ] Skid
- [ ] Tripod
- [ ] Geoprobe
- [ ] Air Track
- [ ] Hand Auger___
- [x] Cat-Head
- [ ] Winch
- [ ] Roller Bit
- [x] Cutting Head

Hammer Type: [ ] Safety [ ] Doughnut [x] Automatic

Drilling Mud: [ ] Bentonite [ ] Polymer [x] None

Total Depth: **130'**

Drilling Notes: Samples for visual-manual ID only

Depth (ft.)	Recovery %	Blow Counts	Sample Depth (ft.)	Well Diagram	PID	USCS Symbol	Visual-Manual Identification & Description (density/consistency, color, GROUP NAME & SYMBOL, maximum particle size*, structure, odor, moisture, optional descriptions, geologic interpretation)	Gravel % Coarse	Gravel % Fine	Sand % Coarse	Sand % Medium	Sand % Fine	% Fines	Field Test Dilatancy	Field Test Toughness	Field Test Plasticity	Field Test Strength
0							4" Asphalt Hand auger first 5 feet										
5	30%	50+	5'		0.0	ML	Dark brown sandy silt, dry, no odor				5	25	70				
10	80%	11/27/39	10'-11.5'		0.0	ML	Brown sandy silt, moist, no odor				5	15	80				
15	95%	30/40/50	15'-16.5'		0.0	SP-SM	Light gray poorly graded sand with silt, moist, no odor			3	7	80	10				
20	95%	27/29/40	20'-21.5'		0.0	ML	Greenish gray sandy silt, moist, no odor					20	80				
								C	F	C	M	F	FS	D	T	P	S

Water Level Data

Date	Time	Elapsed Time (hr.)	Depth in feet to: First Water	Depth in feet to: Stabilized Water

Sample ID

- CC Cont. Core
- T Thin Wall Tube
- U Undisturbed Sample
- S Split Spoon Sample
- G Geoprobe

Well Diagram

- Riser Pipe
- Screen
- Filter Sand
- Cuttings
- Grout
- Cuncrete
- Bentonite Seal

Summary

Boring Depth (Linear ft.)	130'
Sample Method	Cal Mod Split Spoon
Number of Samples	
BORING NO.	MW-710

Field Tests

Dilatancy: R - Rapid S - Slow N - None
Toughness: L - Low M - Medium H - High
Plasticity: N - Nonplastic L - Low M - Medium H - High
Dry Strength: N - None L - Low M - Meduim H - High V - Very High

NOTE: Maximum Particle Size is determined by direct observation within the limitations of sampler size.

NOTE: Soil identifications based on ASTM Method D2248 "Standard Practice for Description and Identification of Soils (Visual-Manual Procedure)"

MUREX environmental, inc

BORING LOG

BORING NO.

MW-710

Depth (ft.)	Recovery (%)	Blow Counts	Sample Depth (ft.)	Well Diagram	PID	USCS Symbol	Visual-Manual Identification & Description (density/consistency, color, GROUP NAME & SYMBOL, maximum particle size*, structure, odor, moisture, optional descriptions, geologic interpretation)	Gravel % Coarse	Gravel % Fine	Sand % Coarse	Sand % Medium	Sand % Fine	% Fines	Field Test Dilatancy	Field Test Toughness	Field Test Plasticity	Field Test Strength
20	95%	27/29/40	20'-21 5		0.0	ML	Greenish gray sandy silt, moist, no odor					20	80				
25	90%	20/30/38	25'-26.5'		0.0	SM	Light brown silty sand with brown mottling, moist, no odor				5	75	20				
30	80%	13/18/33	30'-31.5'		0.0	SP-SM	Yellowish gray poorly graded sand with silt, moist, no odor				3	87	10				
35	65%	21/32/50	35'-36.5'		0.0	SP	Light gray poorly graded sand, moist, no odor			3	7	85	5				
40	50%	22/29/40	40'-41.5'		0.0	SP	SAA				5	80	5				
45	45%	28/35/43	45'-46.5'		0.0	SP	Very light gray poorly graded sand, moist, no odor			5	20	70	5				
50	55%	23/38/50	50'-51.5'		0.0	SW-SM	Two 1-inch bands of rust color staining normal to core apx 3 inch apart at 49' bgs Light gray well graded sand with silt, moist, no odor			20	40	30	10				
								C	F	C	M	F	FS	D	T	P	S

Field Tests

Dilatancy: R - Rapid S - Slow N - None

Toughness: L - Low M - Medium H - High

Plasticity: N - Nonplastic L - Low M - Medium H - High

Dry Strength: N - None L - Low M - Meduim H - High V - Very High

NOTE: Maximum Particle Size is determined by direct observation within the limitations of sampler size.

NOTE: Soil identifications based on ASTM Method D2248 "Standard Practice for Description and Identification of Soils (Visual-Manual Procedure)"

MUREX environmental, inc

BORING LOG

BORING NO.
MW-710

Depth (ft.)	Recovery (%)	Blow Counts	Sample Depth (ft.)	Well Diagram	PID (PPM)	USCS Symbol	Visual-Manual Identification & Description (density/consistency, color, GROUP NAME & SYMBOL, maximum particle size*, structure, odor, moisture, optional descriptions, geologic interpretation)	Gravel % Coarse	Gravel % Fine	Sand % Coarse	Sand % Medium	Sand % Fine	% Fines	Field Test Dilatancy	Field Test Toughness	Field Test Plasticity	Field Test Strength
50	55%	23/38/50	50'-51.5'		0.0	SW-SM	Light gray well graded sand, moist, no odor			20	40	30	10				
55	70%	18/27/43	55'-56.5'		0.0	**SW**	Brownish gray well graded sand, moist, no odor		5	30	40	20	5				
60	90%	28/42/50	60'-61.5'		0.0	**SP**	Light yellowish gray poorly graded sand, moist, no odor			5	20	70	5				
65	80%	18/50+	65'-66 5'		0.0	**SP-SM**	Light gray poorly graded sand with silt, moist, no odor				15	75	10				
70	100%	32/50+	70'-71 5'		0.0	**ML**	Dark gray silt with sand, moist, no odor					15	85				
75	85%	12/39/50+	75'-76.5'		0.0	**SP-SM**	Light gray poorly graded sand with silt, moist, no odor				5	85	10				
80	80%	26/50+	80'-81.5'		0.0	**SP**	Light yellowish brown poorly graded sand, moist, no odor		5	10	60	20	5				
								C	F	C	M	F	FS	D	T	P	S

Field Tests
Dilatancy: R - Rapid S - Slow N - None
Toughness: L - Low M - Medium H - High
Plasticity: N - Nonplastic L - Low M - Medium H - High
Dry Strength: N - None L - Low M - Meduim H - High V - Very High

NOTE: Maximum Particle Size is determined by direct observation within the limitations of sampler size.

NOTE: Soil identifications based on ASTM Method D2248 "Standard Practice for Description and Identification of Soils (Visual-Manual Procedure)"

MUREX environmental, inc

BORING LOG

BORING NO.
MW-710

Depth (ft.)	Recovery (%)	Blow Counts	Sample Depth (ft.)	Well Diagram	PID	USCS Symbol	Visual-Manual Identification & Description (density/consistency, color, GROUP NAME & SYMBOL, maximum particle size*, structure, odor, moisture, optional descriptions, geologic interpretation)	Gravel % Coarse	Gravel % Fine	Sand % Coarse	Sand % Medium	Sand % Fine	% Fines	Field Test Dilatancy	Field Test Toughness	Field Test Plasticity	Field Test Strength
80	80%	26/50+	80'-81.5'		0.0	SP	Light yellowish brown poorly graded sand, moist, no odor		5	10	60	20	5				
85	60%	28/50+	85'-86.5'		0.0	**SP-SM**	Light yellowish brown poorly graded sand with silt, moist, no odor				60	30	10				
90	45%	50+	90'-91.5'		0.0	**SP-SM**	Greenish gray poorly graded sand with silt, moist, no odor			10	60	20	10				
95	15%	50+	95'-96.5'		0.0	SP-SM	Light gray poorly graded sand with silt, moist, no odor			2	68	20	10				
100	95%	35/50+	100'-101.5'		**1.2**	ML	Olive brown sandy silt, moist, no odor					20	80				
105	90%	15/50+	105'-106.5'		**1.1**	SM/ML	Greenish brown sandy silt/silty sand, wet, no odot			10	5	35	50				
110	95%	20/23/27	110'-111.5'		**2.4**	SP	Gray poorly graded sand, wet, no odor				25	70	5				
								C	F	C	M	F	FS	D	T	P	S

Field Tests
Dilatancy: R - Rapid S - Slow N - None
Toughness: L - Low M - Medium H - High
Plasticity: N - Nonplastic L - Low M - Medium H - High
Dry Strength: N - None L - Low M - Meduim H - High V - Very High

NOTE: Maximum Particle Size is determined by direct observation within the limitations of sampler size.

NOTE: Soil identifications based on ASTM Method D2248 "Standard Practice for Description and Identification of Soils (Visual-Manual Procedure)"

MUREX environmental, inc

BORING LOG

BORING NO.
MW-710

Depth (ft.)	Recovery (%)	Blow Counts	Sample Depth (ft.)	Well Diagram	PID	USCS Symbol	Visual-Manual Identification & Description (density/consistency, color, GROUP NAME & SYMBOL, maximum particle size*, structure, odor, moisture, optional descriptions, geologic interpretation)	Gravel % Coarse	Gravel % Fine	Sand % Coarse	Sand % Medium	Sand % Fine	% Fines	Field Test Dilatancy	Field Test Toughness	Field Test Plasticity	Field Test Strength
110	90%	20/23/27	110'-111.5'		2.4	SP	Gray poorly graded sand, wet, no odor				25	70	5				
115	85%	21/50+	115'-116.5'		2	SM	Olive gray silty sand, wet, no odor				15	70	15				
120	100%	25/50+	120'-121.5'		2.7	ML	Olive gray silt with sand, wet, no odor					25	75				
125	90%	6/12/30	125'-126.5'		2.2	SP	Gray poorly graded sand with gravels, wet, no odor	10	10	25	40	10	5				
130	65%	8/10/50	130'-131.5'		1.9	SP	Light gray poorly graded sand with gravels, wet, no odor	10	10	15	50	10	5				
135																	
140																	
								C	F	C	M	F	FS	D	T	P	S

Field Tests
Dilatancy: R - Rapid S - Slow N - None
Toughness: L - Low M - Medium H - High
Plasticity: N - Nonplastic L - Low M - Medium H - High
Dry Strength: N - None L - Low M - Meduim H - High V - Very High

***NOTE: Maximum Particle Size is determined by direct observation within the limitations of sampler size.**

NOTE: Soil identifications based on ASTM Method D2248 "Standard Practice for Description and Identification of Soils (Visual-Manual Procedure)"

MUREX environmental, inc

BORING LOG

BORING NO. **MW-711**

PROJECT	Well Installation	MEI FILE NO.	1003-001-200
LOCATION	12345 Lakeland Rd, Santa Fe Springs, CA	PROJECT MGR.	Jeremy Squire
CLIENT	Lakeland Development Corp.	FIELD REP.	Frane Sosic
CONTRACTOR	WDC, Montclair, CA	DATE STARTED	1/14/2011
DRILLER	Lead driller: Earnie; Helpers: Ricardo, Bobby	DATE FINISHED	1/17/2011

Elevation 128.09 ft. Datum — Boring Location: Hospital ~500' east of MW-710

Item	Casing	Sampler	Core Barrel
Type	CFA	S	NA
Inside Diameter (in.)	5-3/4"	2"	NA
Hammer Weight (lb.)	NA	140	
Hammer Fall (in.)	NA	30	

Rig Make & Model: CME 95

- [x] Truck
- [ ] ATV
- [ ] Track
- [ ] Skid
- [ ] Tripod
- [ ] Geoprobe
- [ ] Air Track
- [ ] Hand Auger___
- [x] Cat-Head
- [ ] Winch
- [ ] Roller Bit
- [x] Cutting Head

Hammer Type: [ ] Safety [ ] Doughnut [x] Automatic

Drilling Mud: [ ] Bentonite [ ] Polymer [x] None

Total Depth: 132'

Drilling Notes: Samples for visual-manual ID only

Depth (ft.)	Recovery %	Blow Counts	Sample Depth (ft.)	Well Diagram	PID	USCS Symbol	Visual-Manual Identification & Description (density/consistency, color, GROUP NAME & SYMBOL, maximum particle size*, structure, odor, moisture, optional descriptions, geologic interpretation)	Gravel % Coarse	Gravel % Fine	Sand % Coarse	Sand % Medium	Sand % Fine	% Fines	Field Test Dilatancy	Field Test Toughness	Field Test Plasticity	Field Test Strength
0							4" Asphalt Hand auger first 5 feet										
5	100%	15/18/21	5'		0.0	ML	Light brown silt with sand, moist, no odor					20	80				
10	55%	20/50+	10'-11.5'		0.0	SM/ML	Light brown silty sand/sandy silt with orange mottling, moist, no odor			3	7	40	50				
15	100%	18/23/26	15'-16.5'		0.0	SM	Yellowish brown silty sand, moist, no odor	3	3			54	40				
20	95%	16/25/29	20'-21.5'		0.0	ML	Grayish brown sandy silt, moist, no odor			5	5	20	70				
								C	F	C	M	F	FS	D	T	P	S

Water Level Data

Date	Time	Elapsed Time (hr.)	Depth in feet to: First Water	Depth in feet to: Stabilized Water

Sample ID

CC	Cont. Core
T	Thin Wall Tube
U	Undisturbed Sample
S	Split Spoon Sample
G	Geoprobe

Well Diagram

- Riser Pipe
- Screen
- Filter Sand
- Cuttings
- Grout
- Cuncrete
- Bentonite Seal

Summary

Boring Depth (Linear ft.)	132'
Sample Method	Cal Mod Split Spoon
Number of Samples	
BORING NO.	MW-711

Field Tests

Dilatancy: R - Rapid S - Slow N - None
Toughness: L - Low M - Medium H - High
Plasticity: N - Nonplastic L - Low M - Medium H - High
Dry Strength: N - None L - Low M - Meduim H - High V - Very High

NOTE: Maximum Particle Size is determined by direct observation within the limitations of sampler size.

NOTE: Soil identifications based on ASTM Method D2248 "Standard Practice for Description and Identification of Soils (Visual-Manual Procedure)"

MUREX environmental, inc

BORING LOG

BORING NO.
MW-711

Depth (ft.)	Recovery (%)	Blow Counts	Sample Depth (ft.)	Well Diagram	PID	USCS Symbol	Visual-Manual Identification & Description (density/consistency, color, GROUP NAME & SYMBOL, maximum particle size*, structure, odor, moisture, optional descriptions, geologic interpretation)	Gravel % Coarse	Gravel % Fine	Sand % Coarse	Sand % Medium	Sand % Fine	% Fines	Field Test Dilatancy	Field Test Toughness	Field Test Plasticity	Field Test Strength
20	95%	16/25/29	20'-21 5		0.0	ML	Grayish brown sandy silt, moist, no odor			5	5	20	70				
25	95%	16/18/23	25'-26.5'		0.0	ML	Yellowish brown sandy silt with orange and gray mottling, moist, no odor				5	35	60				
30	100%	26/37/50+	30'-31.5'		0.0	SM	Greenish gray silty sand with orange-yellow mottling, moist, no odor			5	5	60	30				
35	95%	11/14/18	35'-36.5'		0.0	ML	Greenish gray sandy silt with light gray mottling, moist, no odor				10	30	60				
40	100%	13/26/42	40'-41.5'		**1.0**	SM	Light gray with rusty mottling silty sand, moist, no odor				5	80	15				
45	95%	45/25/50	45'-46.5'		0.0	SM	Olive gray silty sand, moist, no odor					85	15				
50	50%	35/50+	50'-51.5'		**0.8**	SP-SM	Yellowish gray poorly graded sand with silt, moist, no odor		5	25	40	20	10				
								C	F	C	M	F	FS	D	T	P	S

Field Tests
Dilatancy: R - Rapid S - Slow N - None
Toughness: L - Low M - Medium H - High
Plasticity: N - Nonplastic L - Low M - Medium H - High
Dry Strength: N - None L - Low M - Meduim H - High V - Very High

NOTE: Maximum Particle Size is determined by direct observation within the limitations of sampler size.

NOTE: Soil identifications based on ASTM Method D2248 "Standard Practice for Description and Identification of Soils (Visual-Manual Procedure)"

MUREX environmental, inc

BORING LOG

BORING NO.
MW-711

Depth (ft.)	Recovery (%)	Blow Counts	Sample Depth (ft.)	Well Diagram	PID (PPM)	USCS Symbol	Visual-Manual Identification & Description (density/consistency, color, GROUP NAME & SYMBOL, maximum particle size*, structure, odor, moisture, optional descriptions, geologic interpretation)	Gravel % Coarse	Gravel % Fine	Sand % Coarse	Sand % Medium	Sand % Fine	% Fines	Field Test Dilatancy	Field Test Toughness	Field Test Plasticity	Field Test Strength
50	50%	35/50+	50'-51.5'		0.8	SP-SM	Yellowish gray poorly graded sand with silt, moist, no odor		5	25	40	20	10				
55	65%	30/50+	55'-56.5'		0.0	SP-SM	Very light gray poorly graded sand with silt, moist, no odor		5	25	40	20	10				
60	80%	35/50+	60'-61.5'		0.0	SP	Yellowish gray poorly graded sand with gravels, moist, no odor	15	5	10	25	40	5				
65	15%	17/23/50	65'-66 5'		1.2	ML	Greenish gray sandy silt, moist, no odor				20	10	70				
70	100%	27/50+	70'-71.5'		11	ML	Light gray silt with sand with orange mottling and rusty staining normal to core, moist, no odor			10	5	10	75				
75	60%	50+	75'-76.5'		113	SP	Light gray poorly graded sand, moist, strong odor			10	75	10	5				
80	50%	50+	80'-81 5'		5.4	SP-SM	Greenish gray poorly graded sand with silt, moist, slight odor			5	25	60	10				
								C	F	C	M	F	FS	D	T	P	S

Field Tests
Dilatancy: R - Rapid S - Slow N - None
Toughness: L - Low M - Medium H - High
Plasticity: N - Nonplastic L - Low M - Medium H - High
Dry Strength: N - None L - Low M - Meduim H - High V - Very High

NOTE: Maximum Particle Size is determined by direct observation within the limitations of sampler size.

NOTE: Soil identifications based on ASTM Method D2248 "Standard Practice for Description and Identification of Soils (Visual-Manual Procedure)"

MUREX environmental, inc

BORING LOG

BORING NO.
MW-711

Depth (ft.)	Recovery (%)	Blow Counts	Sample Depth (ft.)	Well Diagram	PID	USCS Symbol	Visual-Manual Identification & Description (density/consistency, color, GROUP NAME & SYMBOL, maximum particle size*, structure, odor, moisture, optional descriptions, geologic interpretation)	Gravel % Coarse	Gravel % Fine	Sand % Coarse	Sand % Medium	Sand % Fine	% Fines	Field Test Dilatancy	Field Test Toughness	Field Test Plasticity	Field Test Strength
80	50%	50+	80'-81.5'		5.4	SP-SM	Greenish gray poorly graded sand with silt, moist, slight odor			5	25	60	10				
85	70%	20/33/47	85'-86.5'		7.6	SP	Greenish gray poorly graded sand, moist, slight odor			5	50	40	5				
90	85%	50+	90'-91.5'		13.8	SP	Light gray poorly graded sand, moist, odor			5	55	35	5				
95	90%	25/50+	95'-96.5'		270	ML	Dark olive gray sandy silt, moist, strong odor				5	25	70				
100	65%	25/50+	100'-101.5'		4398	SP	Light gray poorly graded sand, moist, strong odor				50	40	10				
105	100%	9/15/18	105'-106.5'		40	ML	Light olive brown silt with sand, moist, odor		3	7	5	10	75				
110	100%	15/23/33	110'-111.5'		33	ML	Light gray silt with sand, very moist, odor					20	80				
								C	F	C	M	F	FS	D	T	P	S

Field Tests
Dilatancy: R - Rapid S - Slow N - None
Toughness: L - Low M - Medium H - High
Plasticity: N - Nonplastic L - Low M - Medium H - High
Dry Strength: N - None L - Low M - Meduim H - High V - Very High

NOTE: Maximum Particle Size is determined by direct observation within the limitations of sampler size.

NOTE: Soil identifications based on ASTM Method D2248 "Standard Practice for Description and Identification of Soils (Visual-Manual Procedure)"

MUREX environmental, inc

BORING LOG

BORING NO.

MW-711

Depth (ft.)	Recovery (%)	Blow Counts	Sample Depth (ft.)	Well Diagram	PID	USCS Symbol	Visual-Manual Identification & Description (density/consistency, color, GROUP NAME & SYMBOL, maximum particle size*, structure, odor, moisture, optional descriptions, geologic interpretation)	Gravel % Coarse	Gravel % Fine	Sand % Coarse	Sand % Medium	Sand % Fine	% Fines	Field Test Dilatancy	Field Test Toughness	Field Test Plasticity	Field Test Strength
110	100%	15/23/33	110'-111.5'		**33**	ML	Light gray silt with sand, very moist, odor First water encountered at ~112' bgs					20	80				
115	90%	7/17/40	115'-116.5'		**107**	SP	Gray poorly graded sand, wet, strong odor	5	5	5	50	30	5				
120	90%	13/19/21	120'-121.5'		**1249**	SP-SM	Dark gray poorly graded sand with silt, wet, strong odor		5	10	50	25	10				
125	95%	5/15/20	125'-126.5'		**197**	SP-SM	Olive gray poorly graded sand with silt, wet, strong odor			5	60	25	10				
130	95%	7/10/16	130'-131.5'		**243**	SP-SM	SAA				60	30	10				
135																	
140																	
								C	F	C	M	F	FS	D	T	P	S

Field Tests

Dilatancy: R - Rapid S - Slow N - None

Toughness: L - Low M - Medium H - High

Plasticity: N - Nonplastic L - Low M - Medium H - High

Dry Strength: N - None L - Low M - Meduim H - High V - Very High

***NOTE: Maximum Particle Size is determined by direct observation within the limitations of sampler size.**

NOTE: Soil identifications based on ASTM Method D2248 "Standard Practice for Description and Identification of Soils (Visual-Manual Procedure)"

MUREX environmental, inc

BORING LOG

BORING NO. **MW-712**

PROJECT	Well Installation	MEI FILE NO.	1003-001-200
LOCATION	12345 Lakeland Rd, Santa Fe Springs, CA	PROJECT MGR.	Jeremy Squire
CLIENT	Lakeland Development Corp.	FIELD REP.	Frane Sosic
CONTRACTOR	WDC, Montclair, CA	DATE STARTED	1/21/2011
DRILLER	Lead driller: Earnie; Helpers: Ricardo, Bobby	DATE FINISHED	1/24/2011

Elevation 123.57 ft. Datum — Boring Location: Hospital ~200' southeast of MW-711

Item	Casing	Sampler	Core Barrel
Type	CFA	S	NA
Inside Diameter (in.)	5-3/4"	2"	NA
Hammer Weight (lb.)	NA	140	
Hammer Fall (in.)	NA	30	

Rig Make & Model: CME 95

- [x] Truck
- [ ] ATV
- [ ] Track
- [ ] Skid
- [ ] Tripod
- [ ] Geoprobe
- [ ] Air Track
- [ ] Hand Auger___
- [x] Cat-Head
- [ ] Winch
- [ ] Roller Bit
- [x] Cutting Head

Hammer Type: [ ] Safety [ ] Doughnut [x] Automatic

Drilling Mud: [ ] Bentonite [ ] Polymer [x] None

Total Depth: 135'

Drilling Notes: Samples for visual-manual ID only

Depth (ft.)	Recovery %	Blow Counts	Sample Depth (ft.)	Well Diagram	PID	USCS Symbol	Visual-Manual Identification & Description (density/consistency, color, GROUP NAME & SYMBOL, maximum particle size*, structure, odor, moisture, optional descriptions, geologic interpretation)	Gravel % Coarse	Gravel % Fine	Sand % Coarse	Sand % Medium	Sand % Fine	% Fines	Field Test Dilatancy	Field Test Toughness	Field Test Plasticity	Field Test Strength
0							4" Asphalt Hand auger first 5 feet										
5	95%	4/4/2009	5'		0.0	SM	Light brown silty sand, moist, no odor				20	50	30				
10	90%	17/50+	10'-11.5'		0.0	SM	Yellowish brown silty sand, moist, no odor				5	70	25				
15	100%	23/30/35	15'-16.5'		0.0	SP-SM	Light brown poorly graded sand with silt, moist, no odor				70	20	10				
20	95%	8/17/31	20'-21.5'		0.0	SP-SM	Yellowish brown poorly graded sand with silt, moist, no odor			3	62	25	10				
								C	F	C	M	F	FS	D	T	P	S

Water Level Data

Date	Time	Elapsed Time (hr.)	Depth in feet to: First Water	Depth in feet to: Stabilized Water

Sample ID

- CC Cont. Core
- T Thin Wall Tube
- U Undisturbed Sample
- S Split Spoon Sample
- G Geoprobe

Well Diagram

- Riser Pipe
- Screen
- Filter Sand
- Cuttings
- Grout
- Cuncrete
- Bentonite Seal

Summary

Boring Depth (Linear ft.)	135'
Sample Method	Cal Mod Split Spoon
Number of Samples	
BORING NO.	MW-712

Field Tests

Dilatancy: R - Rapid S - Slow N - None
Toughness: L - Low M - Medium H - High
Plasticity: N - Nonplastic L - Low M - Medium H - High
Dry Strength: N - None L - Low M - Meduim H - High V - Very High

NOTE: Maximum Particle Size is determined by direct observation within the limitations of sampler size.

NOTE: Soil identifications based on ASTM Method D2248 "Standard Practice for Description and Identification of Soils (Visual-Manual Procedure)"

MUREX environmental, inc

BORING LOG

BORING NO.

MW-712

Depth (ft.)	Recovery (%)	Blow Counts	Sample Depth (ft.)	Well Diagram	PID	USCS Symbol	Visual-Manual Identification & Description (density/consistency, color, GROUP NAME & SYMBOL, maximum particle size*, structure, odor, moisture, optional descriptions, geologic interpretation)	Gravel % Coarse	Gravel % Fine	Sand % Coarse	Sand % Medium	Sand % Fine	% Fines	Field Test Dilatancy	Field Test Toughness	Field Test Plasticity	Field Test Strength
20	95%	8/17/31	20'-21 5		0.0	SP-SM	Yellowish brown poorly graded sand with silt, moist, no odor			3	62	25	10				
25	100%	19/27/38	25'-26.5'		0.0	ML	Olive gray silt with rust colored and light gray mottling, moist, no odor	3	7			10	80				
30	100%	36/50+	30'-31.5'		0.0	ML	Olive gray silt with sand light gray mottling, moist, no odor	5		5	5	10	75				
35	100%	17/23/37	35'-36.5'		0.0	SP-SM	Light gray poorly graded sand with silt with redish brown mottling, moist, no odor				5	85	10				
40	95%	18/20/35	40'-41.5'		0.0	SP-SM	Orange brown poorly graded sand with silt, moist, no odor					90	10				
45	70%	28/50+	45'-46.5'		0.0	SP-SM	Green brown poorly graded sand with silt, moist, no odor			3	12	75	10				
50	40%	50+	50'-51.5'		0.0	SP	Yellowish-gray-brown poorly graded sand, moist, no odor			10	60	25	5				
								C	F	C	M	F	FS	D	T	P	S

Field Tests

Dilatancy: R - Rapid S - Slow N - None
Toughness: L - Low M - Medium H - High
Plasticity: N - Nonplastic L - Low M - Medium H - High
Dry Strength: N - None L - Low M - Meduim H - High V - Very High

NOTE: Maximum Particle Size is determined by direct observation within the limitations of sampler size.

NOTE: Soil identifications based on ASTM Method D2248 "Standard Practice for Description and Identification of Soils (Visual-Manual Procedure)"

MUREX environmental, inc

BORING LOG

BORING NO.
MW-712

Depth (ft.)	Recovery (%)	Blow Counts	Sample Depth (ft.)	Well Diagram	PID (PPM)	USCS Symbol	Visual-Manual Identification & Description (density/consistency, color, GROUP NAME & SYMBOL, maximum particle size*, structure, odor, moisture, optional descriptions, geologic interpretation)	Gravel % Coarse	Gravel % Fine	Sand % Coarse	Sand % Medium	Sand % Fine	% Fines	Field Test Dilatancy	Field Test Toughness	Field Test Plasticity	Field Test Strength
50	40%	50+	50'-51.5'		0.0	SP	Yellowish-gray-brown poorly graded sand, moist, no odor			10	60	25	5				
55	85%	50+	55'-56.5'		1.8	ML	Greenish gray silt with sand, moist, no odor					15	85				
60	80%	12/26/42	60'-61.5'		0.0	SP	Orange brown poorly graded sand, moist, no odor				5	90	5				
65	90%	13/27/40	65'-66.5'		8.2	SM	Brownish gray silty sand with rusty colored mottling, moist, slight odor		5			75	20				
70	65%	50+	70'-71.5'		4.3	SP-SM	Yellowish gray poorly graded sand with silt with orange hues, moist, slight odor				40	50	10				
75	80%	23/50+	75'-76.5'		45.3	SP-SM	Light gray poorly graded sand with silt, moist, odor					90	10				
80	70%	50+	80'-81.5'		2.8	SP	Light gray poorly graded sand, moist, slight odor				25	70	5				
								C	F	C	M	F	FS	D	T	P	S

Field Tests
Dilatancy: R - Rapid S - Slow N - None
Toughness: L - Low M - Medium H - High
Plasticity: N - Nonplastic L - Low M - Medium H - High
Dry Strength: N - None L - Low M - Meduim H - High V - Very High

NOTE: Maximum Particle Size is determined by direct observation within the limitations of sampler size.

NOTE: Soil identifications based on ASTM Method D2248 "Standard Practice for Description and Identification of Soils (Visual-Manual Procedure)"

MUREX environmental, inc

BORING LOG

BORING NO.
MW-712

Depth (ft.)	Recovery (%)	Blow Counts	Sample Depth (ft.)	Well Diagram	PID	USCS Symbol	Visual-Manual Identification & Description (density/consistency, color, GROUP NAME & SYMBOL, maximum particle size*, structure, odor, moisture, optional descriptions, geologic interpretation)	Gravel % Coarse	Gravel % Fine	Sand % Coarse	Sand % Medium	Sand % Fine	% Fines	Field Test Dilatancy	Field Test Toughness	Field Test Plasticity	Field Test Strength
80	70%	50+	80'-81.5'		2.8	SP	Light gray poorly graded sand, moist, slight odor				25	70	5				
85	65%	50+	85'-86.5'		4.5	SP	Greenish gray poorly graded sand, moist, slight odor				10	85	5				
90	55%	17/50+	90'-91.5'		4.0	SP	Gray poorly graded sand, moist, slight odor			5	20	70	5				
95	85%	50+	95'-96.5'		26.8	SP-SM	Olive gray poorly graded sand with silt, moist, slight odor				5	85	10				
100	60%	28/50+	100'-101.5'		128		Greenish gray, moist, strong odor										
							First water at ~ 105' bgs										
105	55%	50+	105'-106.5'		1901	SP-SM	Greenish gray poorly graded sand with silt, wet, strong odor	2	8	10	50	20	10				
110	85%	15/50+	110'-111.5'		1950	SP-SM	Dark gray poorly graded sand with silt and gravels, wet, strong odor, subangular to subrounded gravels	5	10	10	50	20	5				
								C	F	C	M	F	FS	D	T	P	S

Field Tests
Dilatancy: R - Rapid S - Slow N - None
Toughness: L - Low M - Medium H - High
Plasticity: N - Nonplastic L - Low M - Medium H - High
Dry Strength: N - None L - Low M - Meduim H - High V - Very High

NOTE: Maximum Particle Size is determined by direct observation within the limitations of sampler size.

NOTE: Soil identifications based on ASTM Method D2248 "Standard Practice for Description and Identification of Soils (Visual-Manual Procedure)"

MUREX environmental, inc

BORING LOG

BORING NO.
MW-712

Depth (ft.)	Recovery (%)	Blow Counts	Sample Depth (ft.)	Well Diagram	PID	USCS Symbol	Visual-Manual Identification & Description (density/consistency, color, GROUP NAME & SYMBOL, maximum particle size*, structure, odor, moisture, optional descriptions, geologic interpretation)	Gravel % Coarse	Gravel % Fine	Sand % Coarse	Sand % Medium	Sand % Fine	% Fines	Field Test Dilatancy	Field Test Toughness	Field Test Plasticity	Field Test Strength
110	85%	15/50+	110'-111.5'		**1950**	SP-SM	Dark gray poorly graded sand with silt and gravels, wet, strong odor, subangular to subrounded gravels	5	10	10	50	20	5				
					2379		SAA	5	10	10	50	20	5				
115	100%	28/32/50+	115'-116.5'		**28.6**	ML	Light brown sandy silt with gray mottling, moist, odor				5	15	80				
					2214	SP-SM	Dark gray poorly graded sand with silt, wet, strong odor		5	15	50	20	10				
120	95%	50+	120'-121.5'		**46.2**	ML	Light grown silt with sand, wet, odor		5	3	7	10	75				
125	95%	50+	125'-126.5'		**36.9**	ML	Greenish brown silt, wet, odor	5	5	5			85				
130	95%	13/50+	130'-131.5'		**1368**	SP-SM	Dark gray poorly graded sand with silt, wet, strong odor				25	65	10				
135	10%	50+			**1503.0**	SM	Dark gray silty sand, wet strong odor				5	80	15				
140								C	F	C	M	F	FS	D	T	P	S

Field Tests
Dilatancy: R - Rapid S - Slow N - None
Toughness: L - Low M - Medium H - High
Plasticity: N - Nonplastic L - Low M - Medium H - High
Dry Strength: N - None L - Low M - Meduim H - High V - Very High

***NOTE: Maximum Particle Size is determined by direct observation within the limitations of sampler size.**

NOTE: Soil identifications based on ASTM Method D2248 "Standard Practice for Description and Identification of Soils (Visual-Manual Procedure)"

MUREX environmental, inc

BORING LOG

BORING NO. **MW-713**

PROJECT	Well Installation	MEI FILE NO.	1003-001-200
LOCATION	12345 Lakeland Rd, Santa Fe Springs, CA	PROJECT MGR.	Jeremy Squire
CLIENT	Lakeland Development Corp.	FIELD REP.	Frane Sosic
CONTRACTOR	WDC, Montclair, CA	DATE STARTED	1/18/2011
DRILLER	Lead driller: Earnie; Helpers: Ricardo, Bobby	DATE FINISHED	1/19/2011

Elevation 128.42 ft. Datum — Boring Location: Hospital ~200' east of MW-712

Item	Casing	Sampler	Core Barrel
Type	CFA	S	NA
Inside Diameter (in.)	5-3/4"	2"	NA
Hammer Weight (lb.)	NA	140	
Hammer Fall (in.)	NA	30	

Rig Make & Model: CME 95

- [x] Truck
- [ ] ATV
- [ ] Track
- [ ] Skid
- [ ] Tripod
- [ ] Geoprobe
- [ ] Air Track
- [ ] Hand Auger___
- [x] Cat-Head
- [ ] Winch
- [ ] Roller Bit
- [x] Cutting Head

Hammer Type: [ ] Safety [ ] Doughnut [x] Automatic

Drilling Mud: [ ] Bentonite [ ] Polymer [x] None

Total Depth: 133'

Drilling Notes: Samples for visual-manual ID only

Depth (ft.)	Recovery %	Blow Counts	Sample Depth (ft.)	Well Diagram	PID	USCS Symbol	Visual-Manual Identification & Description (density/consistency, color, GROUP NAME & SYMBOL, maximum particle size*, structure, odor, moisture, optional descriptions, geologic interpretation)	Gravel % Coarse	Gravel % Fine	Sand % Coarse	Sand % Medium	Sand % Fine	% Fines	Field Test Dilatancy	Field Test Toughness	Field Test Plasticity	Field Test Strength
0							4" Asphalt Hand auger first 5 feet										
5	100%	10/13/2020	5'		0.0	ML	Dark brown silt with sand, moist, no odor					15	85				
10	95%	19/25/30	10'-11.5'		0.0	SM	Greenish gray silty sand with rusty orange mottling, moist, no odor				5	60	35				
15	100%	20/20/30	15'-16.5'		0.0	ML	Light olive gray sandy silt, moist, no odor			5	5	30	60				
20	100%	15/20/23	20'-21.5'		0.0	SM	Light brown silty sand with rust colored mottling, moist, no odor				5	80	15				
								C	F	C	M	F	FS	D	T	P	S

Water Level Data

Date	Time	Elapsed Time (hr.)	Depth in feet to: First Water	Depth in feet to: Stabilized Water

Sample ID

CC	Cont. Core
T	Thin Wall Tube
U	Undisturbed Sample
S	Split Spoon Sample
G	Geoprobe

Well Diagram

- Riser Pipe
- Screen
- Filter Sand
- Cuttings
- Grout
- Cuncrete
- Bentonite Seal

Summary

Boring Depth (Linear ft.)	133'
Sample Method	Cal Mod Split Spoon
Number of Samples	
BORING NO.	MW-713

Field Tests

Dilatancy: R - Rapid S - Slow N - None

Toughness: L - Low M - Medium H - High

Plasticity: N - Nonplastic L - Low M - Medium H - High

Dry Strength: N - None L - Low M - Meduim H - High V - Very High

NOTE: Maximum Particle Size is determined by direct observation within the limitations of sampler size.

NOTE: Soil identifications based on ASTM Method D2248 "Standard Practice for Description and Identification of Soils (Visual-Manual Procedure)"

MUREX environmental, inc

BORING LOG

BORING NO.

MW-713

Depth (ft.)	Recovery (%)	Blow Counts	Sample Depth (ft.)	Well Diagram	PID	USCS Symbol	Visual-Manual Identification & Description (density/consistency, color, GROUP NAME & SYMBOL, maximum particle size*, structure, odor, moisture, optional descriptions, geologic interpretation)	Gravel % Coarse	Gravel % Fine	Sand % Coarse	Sand % Medium	Sand % Fine	% Fines	Field Test Dilatancy	Field Test Toughness	Field Test Plasticity	Field Test Strength
20	100%	15/20/23	20'-21 5		0.0	SM	Light brown silty sand with rust colored mottling, moist, no odor				5	80	15				
25	20%	50+	25'-26.5'		0.0	SP	Yellowish orange poorly graded sand, moist, no odor		5	10	55	25	5				
30	70%	7/33/50+	30'-31.5'		**1.5**	SP	Light gray poorly graded sand, moist, no odor			15	50	30	5				
35	65%	25/35/50+	35'-36.5'		0.0	SP	Yellowish brown poorly graded sand, moist, no odor			10	50	35	5				
40	50%	20/50+	40'-41.5'		**1.5**	SP	Light gray poorly graded sand, moist, no odor		5	15	50	25	5				
45	100%	27/50+	45'-46.5'		0.0	SP-SM	Greenish brown poorly graded sand with silt, moist, no odor					90	10				
50	55%	50+	50'-51.5'		0.0	SP	Light gray poorly graded sand, moist, no odor				20	75	5				
								C	F	C	M	F	FS	D	T	P	S

Field Tests

Dilatancy: R - Rapid S - Slow N - None

Toughness: L - Low M - Medium H - High

Plasticity: N - Nonplastic L - Low M - Medium H - High

Dry Strength: N - None L - Low M - Meduim H - High V - Very High

NOTE: Maximum Particle Size is determined by direct observation within the limitations of sampler size.

NOTE: Soil identifications based on ASTM Method D2248 "Standard Practice for Description and Identification of Soils (Visual-Manual Procedure)"

MUREX environmental, inc

BORING LOG

BORING NO.
MW-713

Depth (ft.)	Recovery (%)	Blow Counts	Sample Depth (ft.)	Well Diagram	PID (PPM)	USCS Symbol	Visual-Manual Identification & Description (density/consistency, color, GROUP NAME & SYMBOL, maximum particle size*, structure, odor, moisture, optional descriptions, geologic interpretation)	Gravel % Coarse	Gravel % Fine	Sand % Coarse	Sand % Medium	Sand % Fine	% Fines	Field Test Dilatancy	Field Test Toughness	Field Test Plasticity	Field Test Strength
50	55%	50+	50'-51.5'		0.0	SP	Light gray poorly graded sand, moist, no odor				20	75	5				
55	85%	33/50+	55'-56.5'		0.0	**SP**	Light gray poorly graded sand, moist, no odor			5	55	35	5				
60	100%	10/12/20	60'-61.5'		**1.2**	**ML**	Light brown silt with sand with orange mottling, moist, no odor					15	85				
65	95%	20/50+	65'-66.5'		0.0	**ML**	Greenish brown silt with sand with orange mottling, moist, no odor					25	75				
70	70%	20/50+	70'-71.5'		0.0	**SP**	Yellowish brown poorly graded sand, moist, no odor				60	35	5				
75	85%	20/39/50+	75'-76.5'		0.0	**SP-SM**	Olive gray poorly graded sand with silt, moist, no odor				10	80	10				
80	75%	49/50+	80'-81.5'		**1.2**	**SP-SM**	Light olive gray poorly graded sand with silt, moist, no odor					90	10				
								C	F	C	M	F	FS	D	T	P	S

Field Tests
Dilatancy: R - Rapid S - Slow N - None
Toughness: L - Low M - Medium H - High
Plasticity: N - Nonplastic L - Low M - Medium H - High
Dry Strength: N - None L - Low M - Meduim H - High V - Very High

NOTE: Maximum Particle Size is determined by direct observation within the limitations of sampler size.

NOTE: Soil identifications based on ASTM Method D2248 "Standard Practice for Description and Identification of Soils (Visual-Manual Procedure)"

MUREX environmental, inc

BORING LOG

BORING NO.
MW-713

Depth (ft.)	Recovery (%)	Blow Counts	Sample Depth (ft.)	Well Diagram	PID	USCS Symbol	Visual-Manual Identification & Description (density/consistency, color, GROUP NAME & SYMBOL, maximum particle size*, structure, odor, moisture, optional descriptions, geologic interpretation)	Gravel % Coarse	Gravel % Fine	Sand % Coarse	Sand % Medium	Sand % Fine	% Fines	Field Test Dilatancy	Field Test Toughness	Field Test Plasticity	Field Test Strength
80	75%	49/50+	80'-81.5'		1.2	SP-SM	Light olive gray poorly graded sand with silt, moist, no odor					90	10				
85	70%	25/50+	85'-86.5'		1.7	**SP-SM**	Greenish gray poorly grded sand with silt, moist, no odor					90	10				
90	60%	25/50+	90'-91.5'		2.8	**SP**	Dark gray poorly graded sand, moist, slight odor		5	10	55	25	5				
95	55%	17/27/33	95'-96.5'		1.7	SP	Dark gray poorly graded sand, moist, slight odor				50	40	10				
100	75%	23/50+	100'-101.5'		5.1	SP-SM	Dark gray poorly graded sand with silt, moist, slight odor				10	80	10				
105	100%	13/30/50+	105'-106.5'		91.9	SM	Dark gray silty sand with orange mottling, moist, odor				5	55	40				
110	25%	12/25/53	110'-111.5'		134	SP-SM	Dark gray poorly graded sand with silt, wet, strong odor First water at ~110' bgs				30	60	10				
								C	F	C	M	F	FS	D	T	P	S

Field Tests
Dilatancy: R - Rapid S - Slow N - None
Toughness: L - Low M - Medium H - High
Plasticity: N - Nonplastic L - Low M - Medium H - High
Dry Strength: N - None L - Low M - Meduim H - High V - Very High

NOTE: Maximum Particle Size is determined by direct observation within the limitations of sampler size.

NOTE: Soil identifications based on ASTM Method D2248 "Standard Practice for Description and Identification of Soils (Visual-Manual Procedure)"

MUREX environmental, inc

BORING LOG

BORING NO.
MW-713

Depth (ft.)	Recovery (%)	Blow Counts	Sample Depth (ft.)	Well Diagram	PID	USCS Symbol	Visual-Manual Identification & Description (density/consistency, color, GROUP NAME & SYMBOL, maximum particle size*, structure, odor, moisture, optional descriptions, geologic interpretation)	Gravel % Coarse	Gravel % Fine	Sand % Coarse	Sand % Medium	Sand % Fine	% Fines	Field Test Dilatancy	Field Test Toughness	Field Test Plasticity	Field Test Strength
110	25%	12/25/53	110'-111.5'		**134**	SP-SM	Dark gray poorl graded sand with silt, wet, strong odor				30	60	10				
115	90%	14/50+	115'-116.5'		**113**	SP-SM	Dark gray poorly graded sand with silt, wet, strong odor			5	60	25	10				
120	70%	7/13/17	120'-121.5'		**107**	SP-SM	SAA			5	65	20	10				
125	80%	8/12/15	125'-126.5'		**92**	SP	Dark gray poorly graded sand, wet, strong odor			5	70	20	5				
130	75%	10/15/19	130'-131.5'		**94**	SP	SAA		3	7	65	20	5				
135																	
140																	
								C	F	C	M	F	FS	D	T	P	S

Field Tests
Dilatancy: R - Rapid S - Slow N - None
Toughness: L - Low M - Medium H - High
Plasticity: N - Nonplastic L - Low M - Medium H - High
Dry Strength: N - None L - Low M - Meduim H - High V - Very High

***NOTE: Maximum Particle Size is determined by direct observation within the limitations of sampler size.**

NOTE: Soil identifications based on ASTM Method D2248 "Standard Practice for Description and Identification of Soils (Visual-Manual Procedure)"

MUREX environmental, inc

BORING LOG

BORING NO. **MW-714**

PROJECT	Well Installation	MEI FILE NO.	1003-001-200
LOCATION	12345 Lakeland Rd, Santa Fe Springs, CA	PROJECT MGR.	Jeremy Squire
CLIENT	Lakeland Development Corp.	FIELD REP.	Frane Sosic
CONTRACTOR	WDC, Montclair, CA	DATE STARTED	1/19/2011
DRILLER	Lead driller: Earnie; Helpers: Ricardo, Bobby	DATE FINISHED	1/20/2011

Elevation 129.07 ft. Datum — Boring Location: Hospital near MW-607

Item	Casing	Sampler	Core Barrel
Type	CFA	S	NA
Inside Diameter (in.)	5-3/4"	2"	NA
Hammer Weight (lb.)	NA	140	
Hammer Fall (in.)	NA	30	

Rig Make & Model: CME 95

- [x] Truck
- [ ] ATV
- [ ] Track
- [ ] Skid
- [ ] Tripod
- [ ] Geoprobe
- [ ] Air Track
- [ ] Hand Auger___
- [x] Cat-Head
- [ ] Winch
- [ ] Roller Bit
- [x] Cutting Head

Hammer Type: [ ] Safety [ ] Doughnut [x] Automatic

Drilling Mud: [ ] Bentonite [ ] Polymer [x] None

Total Depth: 143'

Drilling Notes: Samples for visual-manual ID only

Depth (ft.)	Recovery %	Blow Counts	Sample Depth (ft.)	Well Diagram	PID	USCS Symbol	Visual-Manual Identification & Description (density/consistency, color, GROUP NAME & SYMBOL, maximum particle size*, structure, odor, moisture, optional descriptions, geologic interpretation)	Gravel % Coarse	Gravel % Fine	Sand % Coarse	Sand % Medium	Sand % Fine	% Fines	Field Test Dilatancy	Field Test Toughness	Field Test Plasticity	Field Test Strength
0							4" Asphalt Hand auger first 5 feet										
5	100%	16/50+	5'		0.0	SM/ML	Yellowish brown silty sand/sandy silt, moist, no odor, tree roots				10	40	50				
10	75%	5/8/11	10'-11.5'		0.0	SM	Yellowish brown silty sand with rust and brown mottling, moist, no odor				25	50	25				
15	60%	8/12/18	15'-16.5'		0.0	SM	Yellowish brown silty sand, moist, no odor				15	65	20				
20	85%	15/30/33	20'-21.5'		0.0	SP-SM	Yellowish brown poorly graded sand with silt, moist, no odor		5	15	50	20	10				
								C	F	C	M	F	FS	D	T	P	S

Water Level Data

Date	Time	Elapsed Time (hr.)	Depth in feet to: First Water	Depth in feet to: Stabilized Water

Sample ID

- CC Cont. Core
- T Thin Wall Tube
- U Undisturbed Sample
- S Split Spoon Sample
- G Geoprobe

Well Diagram

- Riser Pipe
- Screen
- Filter Sand
- Cuttings
- Grout
- Cuncrete
- Bentonite Seal

Summary

Boring Depth (Linear ft.)	143'
Sample Method	Cal Mod Split Spoon
Number of Samples	
BORING NO.	MW-714

Field Tests

Dilatancy: R - Rapid S - Slow N - None
Toughness: L - Low M - Medium H - High
Plasticity: N - Nonplastic L - Low M - Medium H - High
Dry Strength: N - None L - Low M - Meduim H - High V - Very High

NOTE: Maximum Particle Size is determined by direct observation within the limitations of sampler size.

NOTE: Soil identifications based on ASTM Method D2248 "Standard Practice for Description and Identification of Soils (Visual-Manual Procedure)"

MUREX environmental, inc

BORING LOG

BORING NO.

MW-714

Depth (ft.)	Recovery (%)	Blow Counts	Sample Depth (ft.)	Well Diagram	PID	USCS Symbol	Visual-Manual Identification & Description (density/consistency, color, GROUP NAME & SYMBOL, maximum particle size*, structure, odor, moisture, optional descriptions, geologic interpretation)	Gravel % Coarse	Gravel % Fine	Sand % Coarse	Sand % Medium	Sand % Fine	% Fines	Field Test Dilatancy	Field Test Toughness	Field Test Plasticity	Field Test Strength
20	85%	15/30/33	20'-21 5		0.0	SP-SM	Yellowish brown poorly graded snad with silt, moist, no odor		5	15	50	20	10				
25	70%	17/20/37	25'-26.5'		0.0	SP-SM	SAA			10	30	50	10				
30	80%	20/29/31	30'-31.5'		0.0	SP	Yellowish brown poorly graded sand, moist, no odor			5	35	55	5				
35	15%	15/50+	35'-36.5'		0.0	SW-SM	Light gray well graded sand with silt and gravels, moist, no odor	3	12	25	30	20	10				
40	85%	25/50+	40'-41.5'		0.0	GP	Olive gray poorly graded gravel with sand, moist, no odor	25	40	15	10	5	5				
45	10%	50+	45'-46.5'		0.0	SP	Yellowish gray poorly graded sand, moist, no odor			5	35	55	5				
50	90%	25/35/40	50'-51.5'		0.0	SP	Yellowish gray poorly graded sand, moist, no odor				20	75	5				
								C	F	C	M	F	FS	D	T	P	S

Field Tests

Dilatancy: R - Rapid S - Slow N - None

Toughness: L - Low M - Medium H - High

Plasticity: N - Nonplastic L - Low M - Medium H - High

Dry Strength: N - None L - Low M - Meduim H - High V - Very High

NOTE: Maximum Particle Size is determined by direct observation within the limitations of sampler size.

NOTE: Soil identifications based on ASTM Method D2248 "Standard Practice for Description and Identification of Soils (Visual-Manual Procedure)"

MUREX environmental, inc

BORING LOG

BORING NO.
MW-714

Depth (ft.)	Recovery (%)	Blow Counts	Sample Depth (ft.)	Well Diagram	PID (PPM)	USCS Symbol	Visual-Manual Identification & Description (density/consistency, color, GROUP NAME & SYMBOL, maximum particle size*, structure, odor, moisture, optional descriptions, geologic interpretation)	Gravel % Coarse	Gravel % Fine	Sand % Coarse	Sand % Medium	Sand % Fine	% Fines	Field Test Dilatancy	Field Test Toughness	Field Test Plasticity	Field Test Strength
50	90%	25/35/40	50'-51.5'		0.0	SP	Yellowish gray poorly graded sand, moist, no odor				20	75	5				
55	85%	7/50+	55'-56 5'		0.0	SP-SM	Reddish brown poorly graded sand with silt, moist, no odor				25	65	10				
60	60%	17/31/40	60'-61.5'		0.0	SP-SM	Light brown poorly graded sand with silt with yellow-orange hues, moist, no odor		5	10	50	25	10				
65	80%	30/50+	65'-66 5'		0.0	SW-SM	Light brown well graded sand with silt and gravels, moist, no odor		20	20	30	20	10				
70	90%	23/29/40	70'-71.5'		977	ML	Dark gray silt with sand, moist, strong odor, visible staining					25	75				
75	95%	23/30/41	75'-76.5'		2.3	SP-SM	Olive gray poorly graded sand with silt, moist, slight odor					90	10				
80	90%	28/50+	80'-81 5'		231	SP-SM	Greenish gray poorly graded sand with silt, moist, strong odor				15	75	10				
								C	F	C	M	F	FS	D	T	P	S

Field Tests
Dilatancy: R - Rapid S - Slow N - None
Toughness: L - Low M - Medium H - High
Plasticity: N - Nonplastic L - Low M - Medium H - High
Dry Strength: N - None L - Low M - Meduim H - High V - Very High

NOTE: Maximum Particle Size is determined by direct observation within the limitations of sampler size.

NOTE: Soil identifications based on ASTM Method D2248 "Standard Practice for Description and Identification of Soils (Visual-Manual Procedure)"

MUREX environmental, inc

BORING LOG

BORING NO.
MW-714

Depth (ft.)	Recovery (%)	Blow Counts	Sample Depth (ft.)	Well Diagram	PID	USCS Symbol	Visual-Manual Identification & Description (density/consistency, color, GROUP NAME & SYMBOL, maximum particle size*, structure, odor, moisture, optional descriptions, geologic interpretation)	Gravel % Coarse	Gravel % Fine	Sand % Coarse	Sand % Medium	Sand % Fine	% Fines	Field Test Dilatancy	Field Test Toughness	Field Test Plasticity	Field Test Strength
80	90%	28/50+	80'-81.5'		231	SP-SM	Greenish gray poorly graded sand with silt, moist, strong odor				15	75	10				
85	80%	35/50+	85'-86.5'		1.8	**SP-SM**	SAA				10	80	10				
90	95%	15/50+	90'-91.5'		196	**ML**	Olive gray silt with sand, moist, odor					25	75				
95	90%	30/43/50+	95'-96.5'		2.1	SP-SM	Dark gray poorly graded sand with silt, moist, slight odor					90	10				
100	90%	15/50+	100'-101.5'		100	SP-SM	Dark gray poorly graded sand with silt, moist, odor				15	75	10				
105	5%	31/50+	105'-106.5'		18.5	SM	Gray silty sand, moist, slight odor			5	15	60	20				
110	75%	24/50+	110'-111.5'		21	SP-SM	Greenish gray poorly graded sand with silt, moist, slight odor		3	7	40	40	10				
								C	F	C	M	F	FS	D	T	P	S

Field Tests
Dilatancy: R - Rapid S - Slow N - None
Toughness: L - Low M - Medium H - High
Plasticity: N - Nonplastic L - Low M - Medium H - High
Dry Strength: N - None L - Low M - Meduim H - High V - Very High

NOTE: Maximum Particle Size is determined by direct observation within the limitations of sampler size.

NOTE: Soil identifications based on ASTM Method D2248 "Standard Practice for Description and Identification of Soils (Visual-Manual Procedure)"

MUREX environmental, inc

BORING LOG

BORING NO.
MW-714

Depth (ft.)	Recovery (%)	Blow Counts	Sample Depth (ft.)	Well Diagram	PID	USCS Symbol	Visual-Manual Identification & Description (density/consistency, color, GROUP NAME & SYMBOL, maximum particle size*, structure, odor, moisture, optional descriptions, geologic interpretation)	Gravel % Coarse	Gravel % Fine	Sand % Coarse	Sand % Medium	Sand % Fine	% Fines	Field Test Dilatancy	Field Test Toughness	Field Test Plasticity	Field Test Strength
110	75%	24/50+	110'-111.5'		21	SP-SM	Greenish gray poorly graded sand with silt, moist, slight odor		3	7	40	40	10				
115	80%	50+	115'-116.5'		505	SP-SM	Gray poorly graded sand with silt, wet, strong odor First water at ~115' bgs				40	50	10				
120	95%	25/50+	120'-121.5'		304	ML	Gray silty sand, wet, strong odor				35	50	15				
125	95%	15/50+	125'-126.5'		393	SM	Very light gray silty sand, wet, strong odor					70	30				
130	45%	50+	130'-131.5'		381	SM	Dark olive gray silty sand, wet, strong odor				5	75	20				
135	100%	11/30/50+			128	SM	Dark gray silty sand, wet, strong odor				5	80	15				
140	85%	11/20/50+			229	SM	SAA				25	60	15				
								C	F	C	M	F	FS	D	T	P	S

Field Tests
Dilatancy: R - Rapid S - Slow N - None
Toughness: L - Low M - Medium H - High
Plasticity: N - Nonplastic L - Low M - Medium H - High
Dry Strength: N - None L - Low M - Meduim H - High V - Very High

***NOTE: Maximum Particle Size is determined by direct observation within the limitations of sampler size.**

NOTE: Soil identifications based on ASTM Method D2248 "Standard Practice for Description and Identification of Soils (Visual-Manual Procedure)"

MUREX environmental, inc

BORING LOG

BORING NO. **MW-715**

PROJECT	Well Installation	MEI FILE NO.	1003-001-200
LOCATION	12345 Lakeland Rd, Santa Fe Springs, CA	PROJECT MGR.	Jeremy Squire
CLIENT	Lakeland Development Corp.	FIELD REP.	Frane Sosic
CONTRACTOR	WDC, Montclair, CA	DATE STARTED	1/26/2011
DRILLER	Lead driller: Earnie; Helpers: Ricardo, Bobby	DATE FINISHED	1/27/2011

Elevation 116.66 ft. Datum — Boring Location: Hospital near MW-608

Item	Casing	Sampler	Core Barrel
Type	CFA	S	NA
Inside Diameter (in.)	5-3/4"	2"	NA
Hammer Weight (lb.)	NA	140	
Hammer Fall (in.)	NA	30	

Rig Make & Model: CME 95

- [x] Truck
- [ ] ATV
- [ ] Track
- [ ] Skid
- [ ] Tripod
- [ ] Geoprobe
- [ ] Air Track
- [ ] Hand Auger___
- [x] Cat-Head
- [ ] Winch
- [ ] Roller Bit
- [x] Cutting Head

Hammer Type: [ ] Safety [ ] Doughnut [x] Automatic

Drilling Mud: [ ] Bentonite [ ] Polymer [x] None

Total Depth: 135'

Drilling Notes: Samples for visual-manual ID only

Depth (ft.)	Recovery %	Blow Counts	Sample Depth (ft.)	Well Diagram	PID	USCS Symbol	Visual-Manual Identification & Description (density/consistency, color, GROUP NAME & SYMBOL, maximum particle size*, structure, odor, moisture, optional descriptions, geologic interpretation)	Gravel % Coarse	Gravel % Fine	Sand % Coarse	Sand % Medium	Sand % Fine	% Fines	Dilatancy	Toughness	Plasticity	Strength
0							4" Asphalt										
							Hand auger first 5 feet										
						SM	2.5YR 3/6 dark red silty sand moist, no odor				5	70	25				
5	100%	7/10/2012	5'		0.0	SM	10YR 6/3 pale brown silty sand, moist, no odor				5	75	20				
10	100%	15/26/27	10'-11.5'		0.0	SP-SM	10YR 5/4 yellowish brown poorly graded sand with silt, moist, no odor				5	85	10				
15	0%	17/26/27	15'-16.5'		NA		No Recovery										
20	95%	20/25/27	20'-21.5'		0.0	SP	10YR 6/4 brownish yellow poorly graded sand, moist, no odor				5	90	5				
								C	F	C	M	F	FS	D	T	P	S

Water Level Data

Date	Time	Elapsed Time (hr.)	Depth in feet to: First Water	Depth in feet to: Stabilized Water

Sample ID

- CC Cont. Core
- T Thin Wall Tube
- U Undisturbed Sample
- S Split Spoon Sample
- G Geoprobe

Well Diagram

- Riser Pipe
- Screen
- Filter Sand
- Cuttings
- Grout
- Cuncrete
- Bentonite Seal

Summary

Boring Depth (Linear ft.)	135'
Sample Method	Cal Mod Split Spoon
Number of Samples	
BORING NO.	MW-715

Field Tests

Dilatancy: R - Rapid S - Slow N - None

Toughness: L - Low M - Medium H - High

Plasticity: N - Nonplastic L - Low M - Medium H - High

Dry Strength: N - None L - Low M - Meduim H - High V - Very High

NOTE: Maximum Particle Size is determined by direct observation within the limitations of sampler size.

NOTE: Soil identifications based on ASTM Method D2248 "Standard Practice for Description and Identification of Soils (Visual-Manual Procedure)"

MUREX environmental, inc

BORING LOG

BORING NO.

MW-715

Depth (ft.)	Recovery (%)	Blow Counts	Sample Depth (ft.)	Well Diagram	PID	USCS Symbol	Visual-Manual Identification & Description (density/consistency, color, GROUP NAME & SYMBOL, maximum particle size*, structure, odor, moisture, optional descriptions, geologic interpretation)	Gravel % Coarse	Gravel % Fine	Sand % Coarse	Sand % Medium	Sand % Fine	% Fines	Field Test Dilatancy	Field Test Toughness	Field Test Plasticity	Field Test Strength
20	95%	20/25/27	20'-21 5		0.0	SP	10YR 6/4 brownish yellow poorly graded sand, moist, no odor				5	90	5				
						ML	2.5YR 5/4 reddish brown silt with sand, moist, no odor			10	10	5	75				
25	75%	15/30/30	25'-26.5'		0.0	SP	5YR 6/2 pinkish gray poorly graded sand, moist, no odor		5	15	25	50	5				
30	10%	10/50+	30'-31.5'		0.0	SP	SAA										
35	85%	25/50+	35'-36.5'		0.0	SP	10YR 6/1 gray poorly graded sand, moist, no odor			10	25	60	5				
40	100%	50/18/21	40'-41.5'		0.0	ML	2.5Y 5/1 gray silt with sand, moist, no odor	5	5	5	5		80				
45	100%	22/22/23	45'-46.5'		0.0	SP-SM	5Y 4/3 olive poorly graded sand with silt, moist, no odor				10	80	10				
50	100%	23/28/30	50'-51.5'		0.0	SM	5Y 4/1 dark gray silty sand with rusty-brown mottling, moist, no odor				15	70	15				
								C	F	C	M	F	FS	D	T	P	S

Field Tests

Dilatancy: R - Rapid S - Slow N - None

Toughness: L - Low M - Medium H - High

Plasticity: N - Nonplastic L - Low M - Medium H - High

Dry Strength: N - None L - Low M - Meduim H - High V - Very High

NOTE: Maximum Particle Size is determined by direct observation within the limitations of sampler size.

NOTE: Soil identifications based on ASTM Method D2248 "Standard Practice for Description and Identification of Soils (Visual-Manual Procedure)"

MUREX environmental, inc

BORING LOG

BORING NO. **MW-715**

Depth (ft.)	Recovery (%)	Blow Counts	Sample Depth (ft.)	Well Diagram	PID (PPM)	USCS Symbol	Visual-Manual Identification & Description (density/consistency, color, GROUP NAME & SYMBOL, maximum particle size*, structure, odor, moisture, optional descriptions, geologic interpretation)	Gravel % Coarse	Gravel % Fine	Sand % Coarse	Sand % Medium	Sand % Fine	% Fines	Field Test Dilatancy	Field Test Toughness	Field Test Plasticity	Field Test Strength
50	100%	23/28/30	50'-51.5'		0.0	SM	5Y 4/1 dark gray silty sand with rusty-brown mottling, moist, no odor				15	70	15				
55	50%	50+	55'-56.5'		0.0	SP	5Y 6/4 pale olive poorly graded sand, moist, no odor				5	90	5				
60	60%	50+	60'-61 5'		0.0	SP	5Y 7/2 light gray poorly graded sand, moist, slight odor			5	25	65	5				
65	95%	24/26/34	65'-66.5'		0.0	SP-SM	2.5Y 4/4 olive brown poorly graded sand with silt with brown and gray mottling, moist, slight odor				10	80	10				
70	100%	20/28/30	70'-71.5'		4.3	ML	10YR 4/4 dark yellowish brown sandy silt with gray mottlilng, very moist, slight odor Water encountered at ~70' - 75' bgs				10	20	70				
75	95%	10/19/35	75'-76.5'		1.2	ML	7.5YR 4/6 strong brown silt with sand, wet, no odor					10	90	S	M	M	V
80	85%	50+	80'-81 5'		1.2	SP-SM	10YR 6/4 light yellowish brown poorly graded sand with silt, wet, no odor				55	35	10				
								C	F	C	M	F	FS	D	T	P	S

Field Tests

Dilatancy: R - Rapid S - Slow N - None
Toughness: L - Low M - Medium H - High
Plasticity: N - Nonplastic L - Low M - Medium H - High
Dry Strength: N - None L - Low M - Meduim H - High V - Very High

NOTE: Maximum Particle Size is determined by direct observation within the limitations of sampler size.

NOTE: Soil identifications based on ASTM Method D2248 "Standard Practice for Description and Identification of Soils (Visual-Manual Procedure)"

MUREX environmental, inc

BORING LOG

BORING NO.
MW-715

Depth (ft.)	Recovery (%)	Blow Counts	Sample Depth (ft.)	Well Diagram	PID	USCS Symbol	Visual-Manual Identification & Description (density/consistency, color, GROUP NAME & SYMBOL, maximum particle size*, structure, odor, moisture, optional descriptions, geologic interpretation)	Gravel % Coarse	Gravel % Fine	Sand % Coarse	Sand % Medium	Sand % Fine	% Fines	Field Test Dilatancy	Field Test Toughness	Field Test Plasticity	Field Test Strength
80	85%	50+	80'-81.5'		1.2	SP-SM	10YR 6/4 light yellowish brown poorly graded sand with silt, wet, no odor				55	35	10				
85	100%	20/27/35	85'-86.5'		0.0	**SM**	2.5Y 5/4 light olive brown silty sand, very moist, no odor					75	25				
90	70%	50+	90'-91.5'		0.0	**SP-SM**	2.5Y 4/4 olive brown poorly graded sand with silt, very moist, no odor					90	10				
95	15%	50+	95'-96.5'		1.2	SP	2.5Y 6/6 olive yellow poorly graded sand, moist, slight odor			5	65	25	5				
100	15%	50+	100'-101.5'		1.5	SP	5Y 7/1 light gray poorly graded sand, moist, no odor				5	90	5				
105	90%	15/50+	105'-106.5'		12.2	SP	2.5Y 5/1 gray poorly graded sand, wet, slight odor				25	70	5				
110	100%	15/50+	110'-111.5'		79.2	SP	SAA, w/ more obvious odor Groundwater encountered at ~ 110' bgs			5	20	70	5				
								C	F	C	M	F	FS	D	T	P	S

Field Tests
Dilatancy: R - Rapid S - Slow N - None
Toughness: L - Low M - Medium H - High
Plasticity: N - Nonplastic L - Low M - Medium H - High
Dry Strength: N - None L - Low M - Meduim H - High V - Very High

NOTE: Maximum Particle Size is determined by direct observation within the limitations of sampler size.

NOTE: Soil identifications based on ASTM Method D2248 "Standard Practice for Description and Identification of Soils (Visual-Manual Procedure)"

MUREX environmental, inc

BORING LOG

BORING NO.
MW-715

Depth (ft.)	Recovery (%)	Blow Counts	Sample Depth (ft.)	Well Diagram	PID	USCS Symbol	Visual-Manual Identification & Description (density/consistency, color, GROUP NAME & SYMBOL, maximum particle size*, structure, odor, moisture, optional descriptions, geologic interpretation)	Gravel % Coarse	Gravel % Fine	Sand % Coarse	Sand % Medium	Sand % Fine	% Fines	Field Test Dilatancy	Field Test Toughness	Field Test Plasticity	Field Test Strength
110	100%	15/50+	110'-111.5'		**79.2**	SP	SAA, w/ more obvious odor			5	20	70	5				
115	95%	20/50+	115'-116.5'		**74.5**	SP	2.5Y 5/1 gray poorly graded sand, wet, moderate odor	5	5	15	50	20	5				
120	90%	8/21/50+	120'-121.5'		**58**	SP-SM	10YR 5/1 gray poorly graded sand with silt, wet, moderate odor			5	60	25	10				
125	100%	10/18/20	125'-126.5'		**53.2**	SP	10YR 5/1 gray poorly graded sand, wet, moderate odor		5	15	60	15	5				
130	90%	11/16/25	130'-131.5'		**91.6**	SP	SAA			5	65	25	5				
135																	
140																	
								C	F	C	M	F	FS	D	T	P	S

Field Tests
Dilatancy: R - Rapid S - Slow N - None
Toughness: L - Low M - Medium H - High
Plasticity: N - Nonplastic L - Low M - Medium H - High
Dry Strength: N - None L - Low M - Meduim H - High V - Very High

***NOTE: Maximum Particle Size is determined by direct observation within the limitations of sampler size.**

NOTE: Soil identifications based on ASTM Method D2248 "Standard Practice for Description and Identification of Soils (Visual-Manual Procedure)"

Appendix D

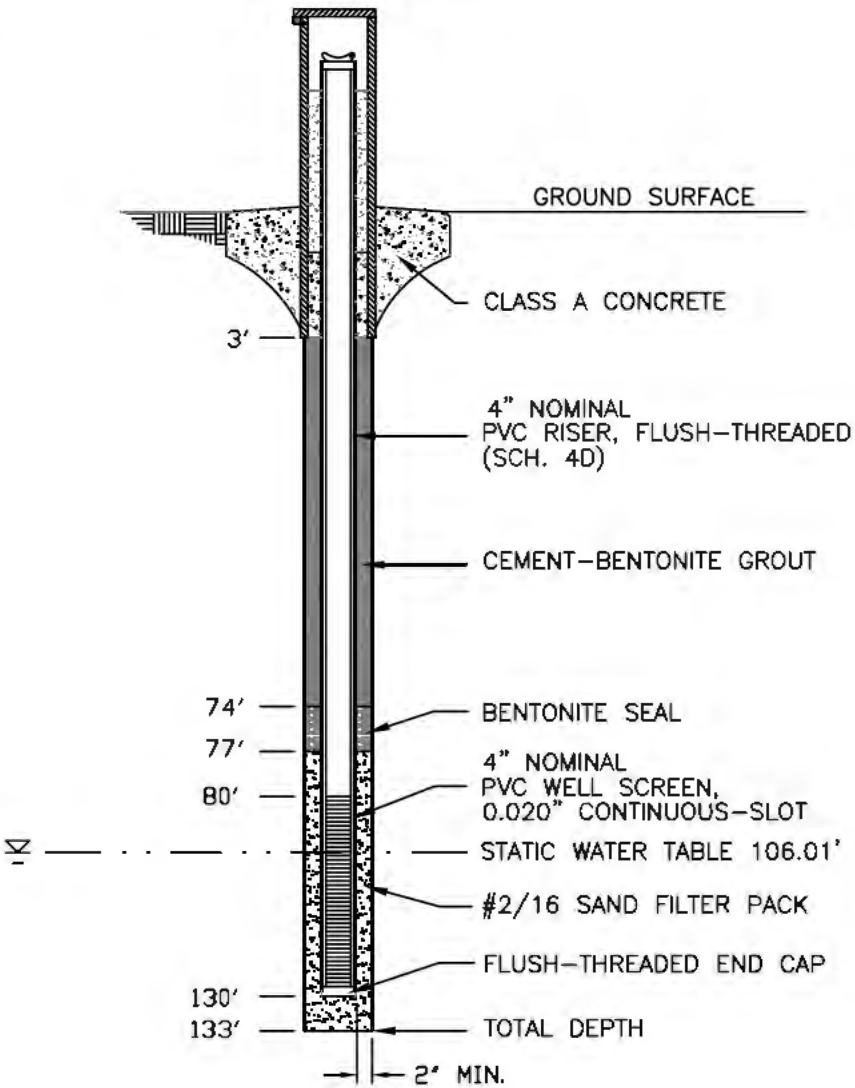

MONITORING WELL
CONSTRUCTION DETAIL

N.T.S.

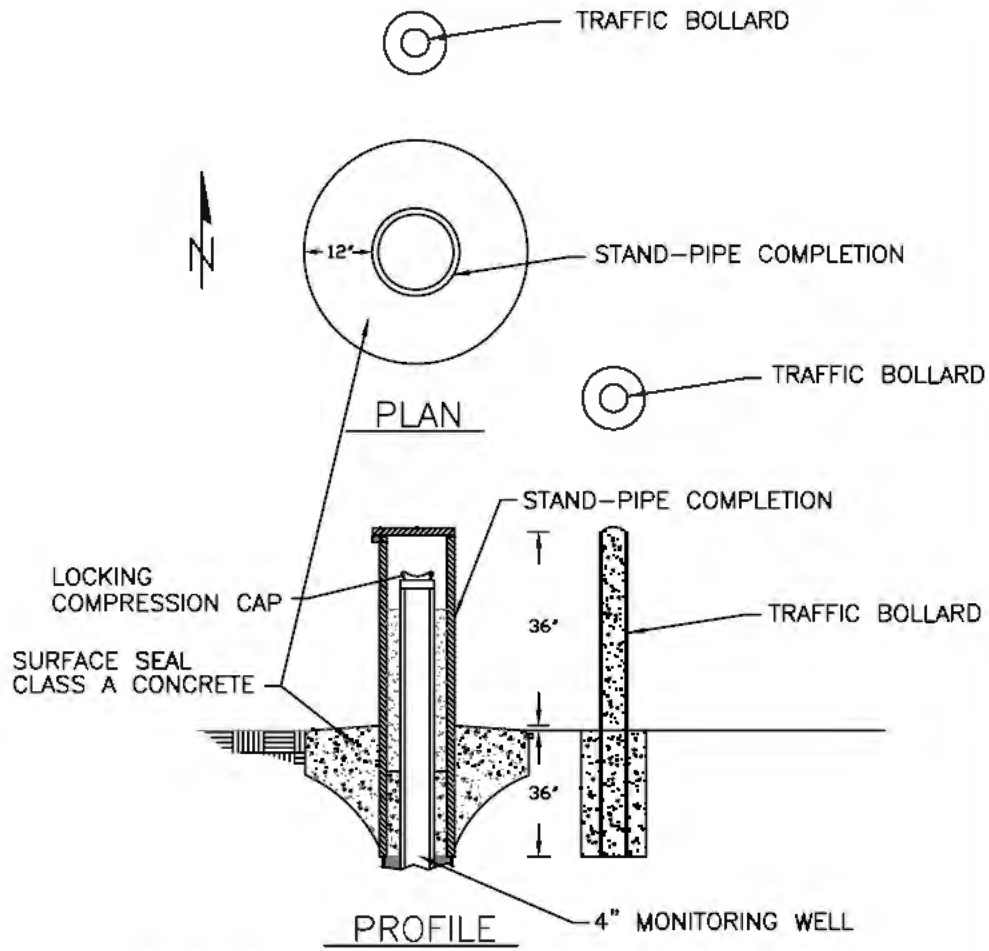

MONITORING WELL STAND-PIPE
SURFACE COMPLETION DETAIL

N.T.S.

FORMER CENCO REFINERY
12345 LAKELAND BLVD
SANTA FE SPRINGS, CALIFORNIA

WELL CONSTRUCTION DETAILS
MW-701

MUREX
environmental, inc

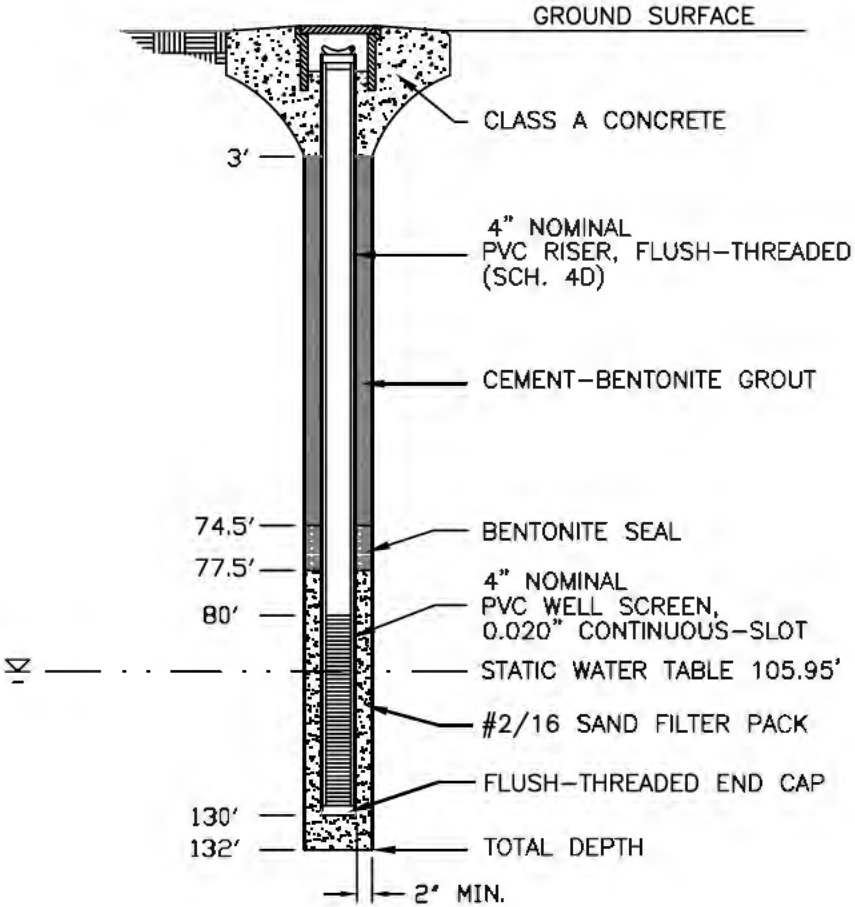

MONITORING WELL
CONSTRUCTION DETAIL

N.T.S.

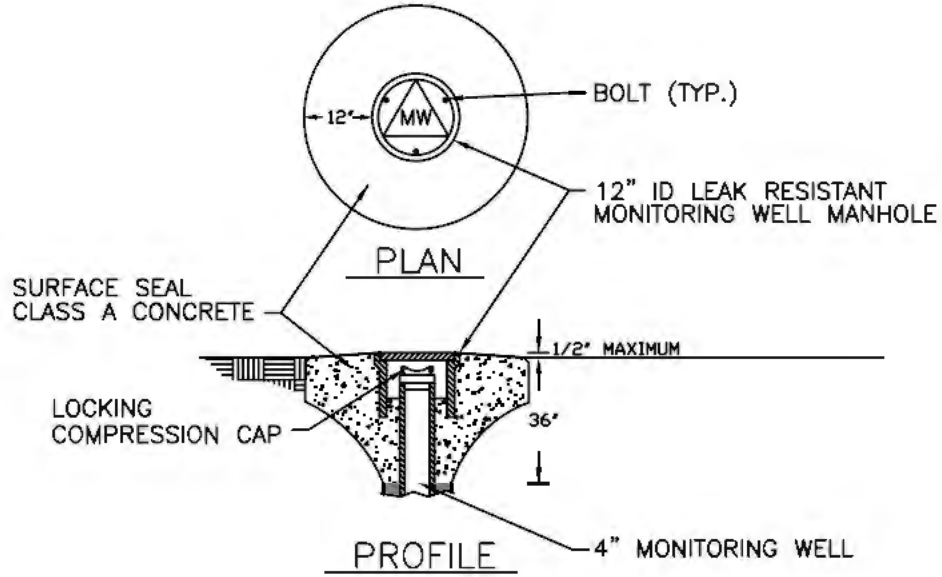

MONITORING WELL FLUSH
MOUNT COMPLETION DETAIL

N.T.S.

FORMER CENCO REFINERY
12345 LAKELAND BLVD
SANTA FE SPRINGS, CALIFORNIA

WELL CONSTRUCTION DETAILS
MW-702

MUREX
environmental, inc

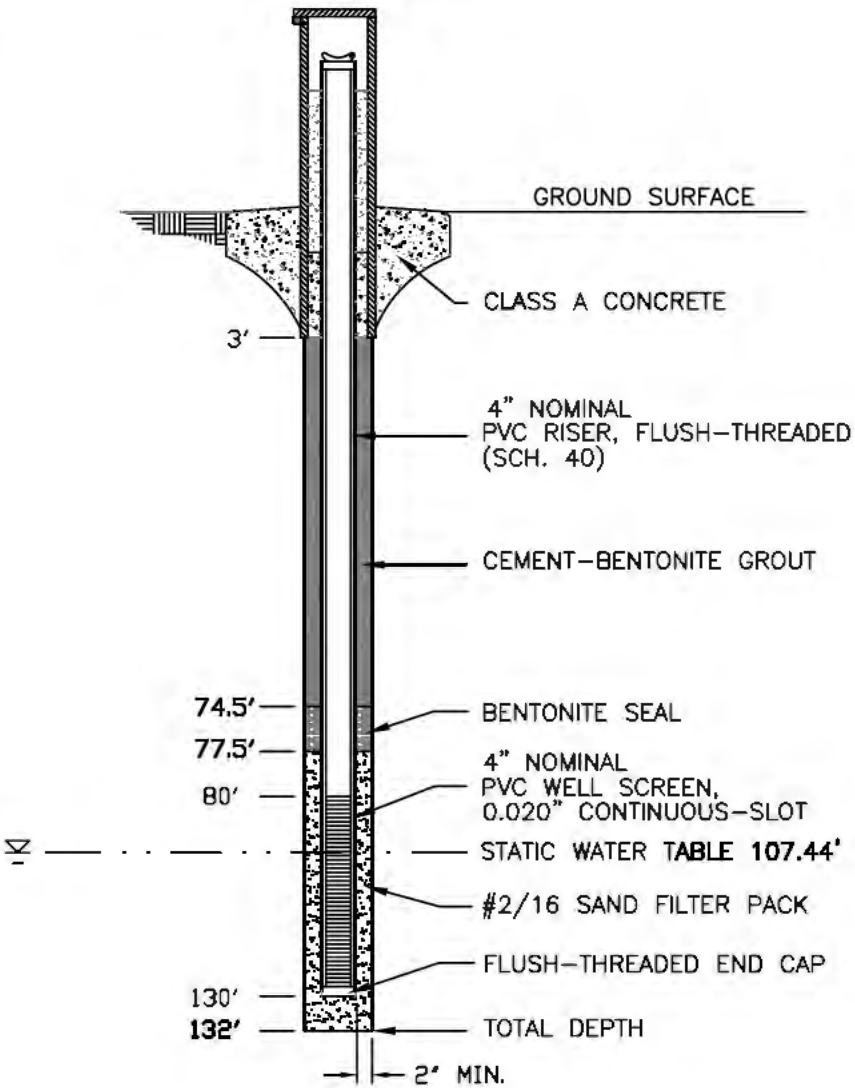

MONITORING WELL
CONSTRUCTION DETAIL

N.T.S.

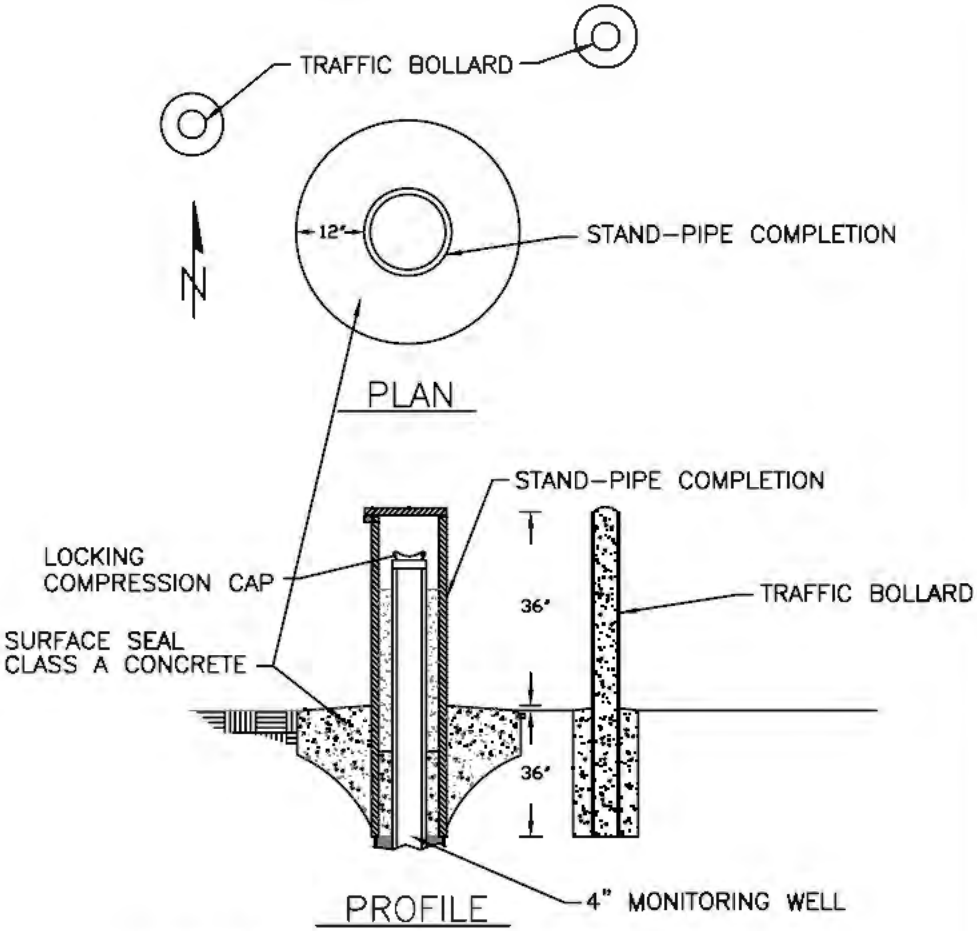

MONITORING WELL STAND-PIPE
SURFACE COMPLETION DETAIL

N.T.S.

FORMER CENCO REFINERY
12345 LAKELAND BLVD
SANTA FE SPRINGS, CALIFORNIA

WELL CONSTRUCTION DETAILS
MW-703

MUREX
environmental, inc

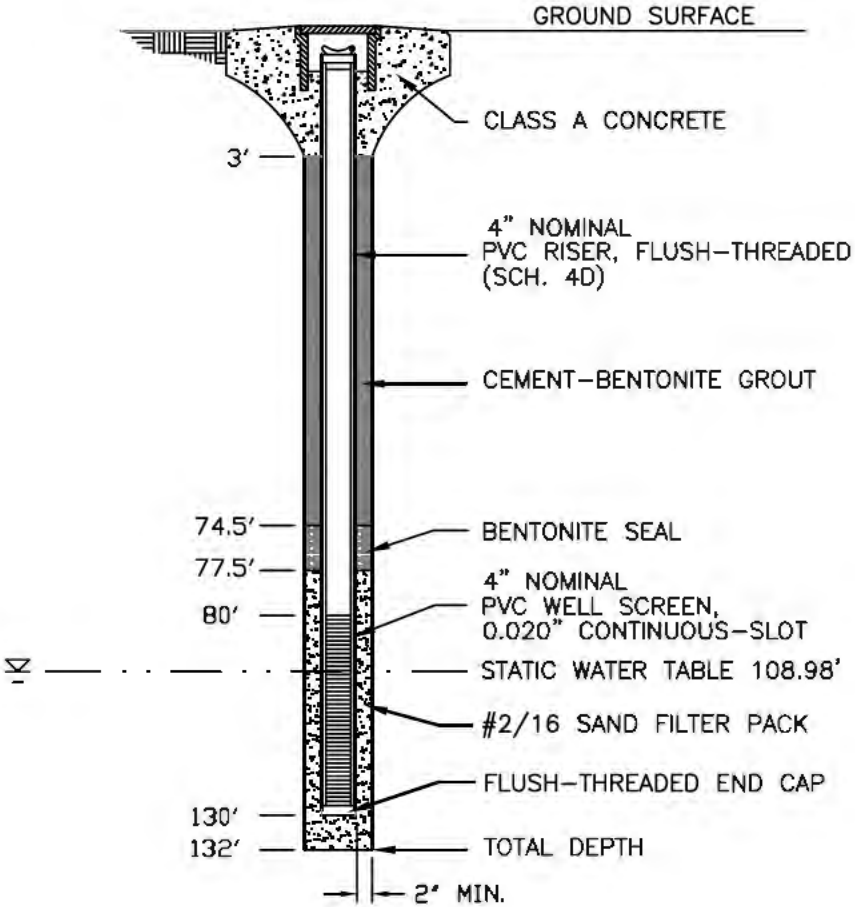

MONITORING WELL
CONSTRUCTION DETAIL

N.T.S.

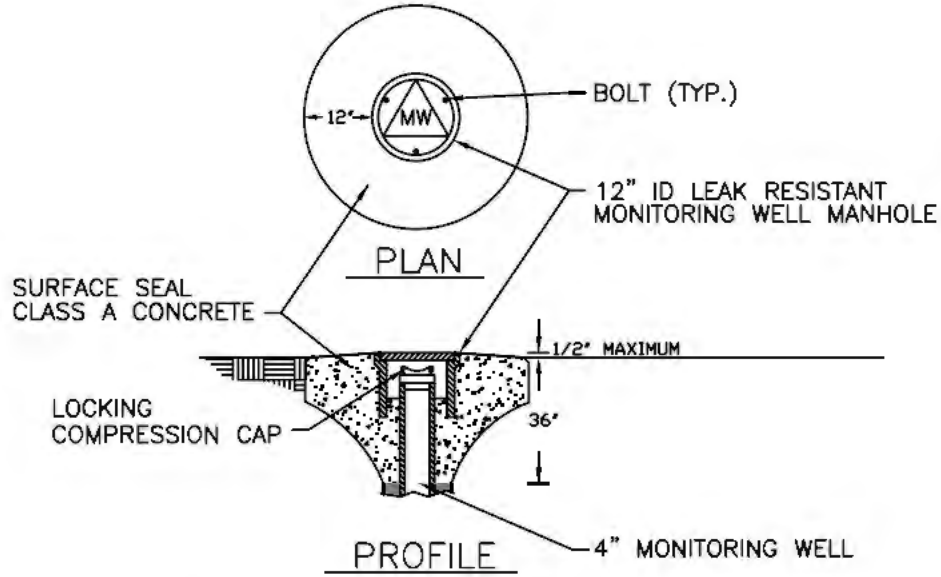

MONITORING WELL FLUSH
MOUNT COMPLETION DETAIL

N.T.S.

FORMER CENCO REFINERY
12345 LAKELAND BLVD
SANTA FE SPRINGS, CALIFORNIA

WELL CONSTRUCTION DETAILS
MW-704

MUREX
environmental, inc

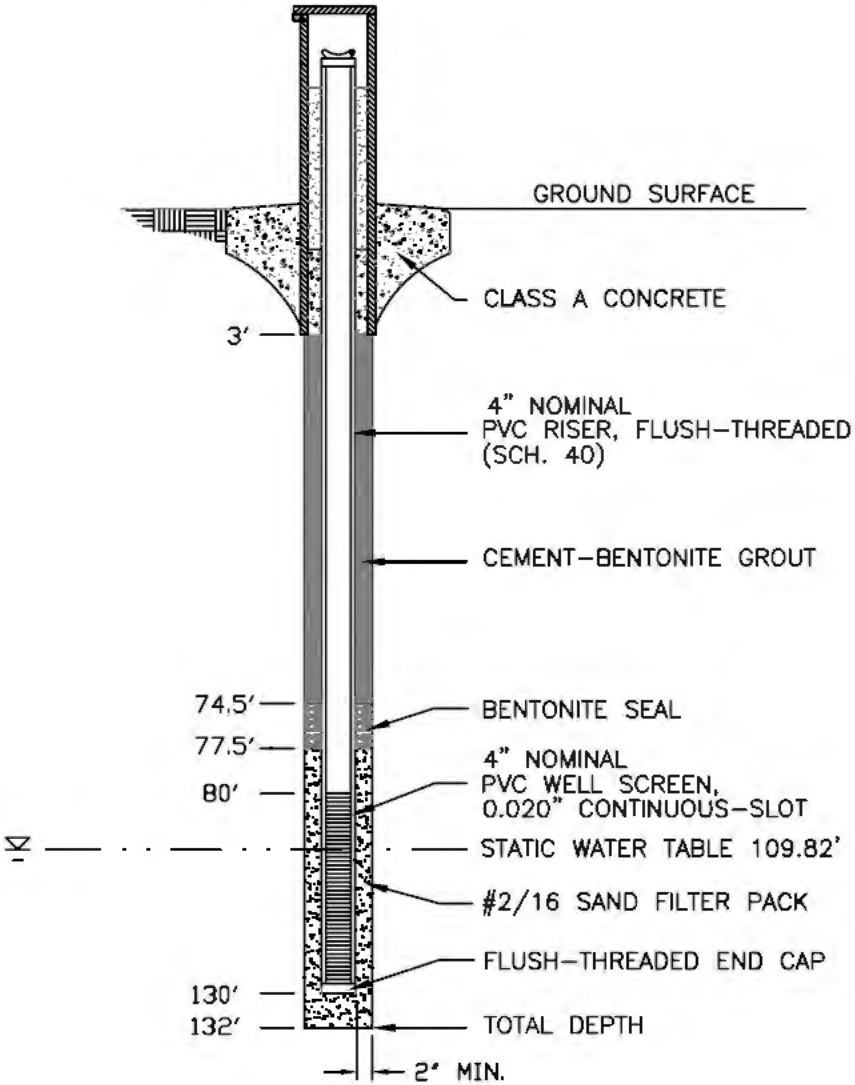

MONITORING WELL
CONSTRUCTION DETAIL

N.T.S.

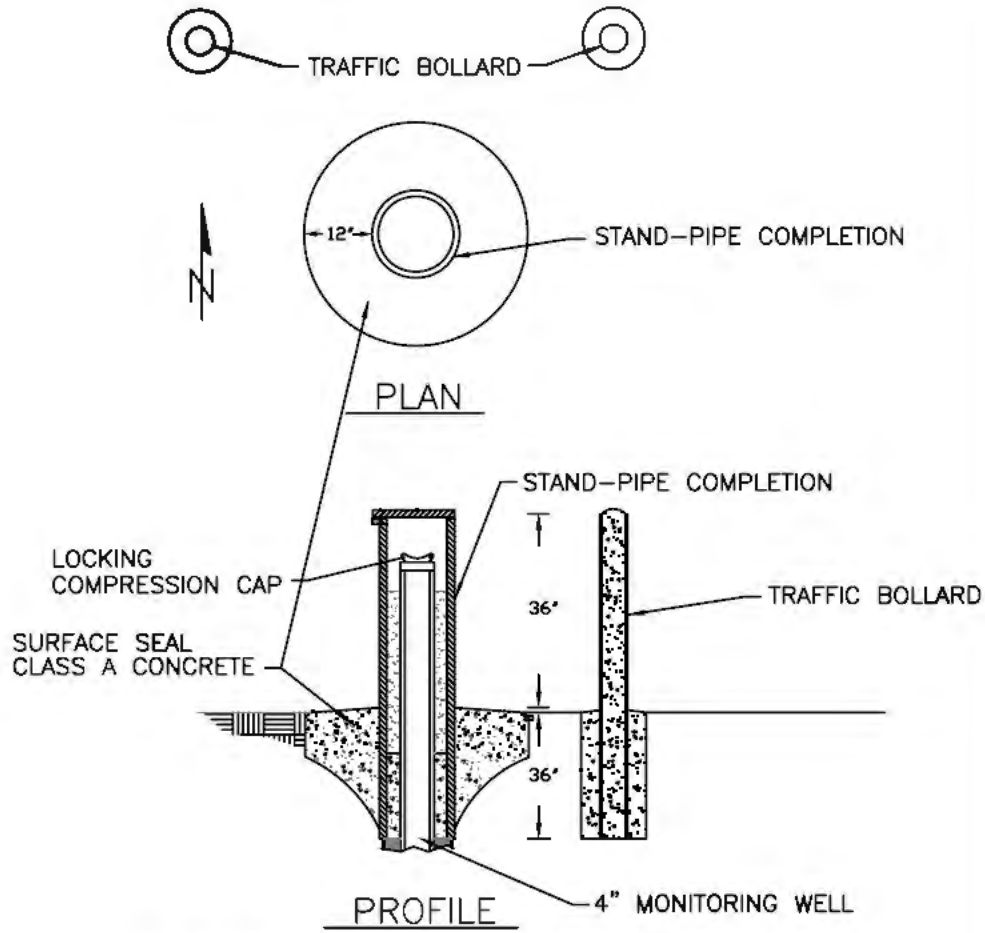

MONITORING WELL STAND-PIPE
SURFACE COMPLETION DETAIL

N.T.S.

FORMER CENCO REFINERY
12345 LAKELAND BLVD
SANTA FE SPRINGS, CALIFORNIA

WELL CONSTRUCTION DETAILS
MW-705

MUREX
environmental, inc

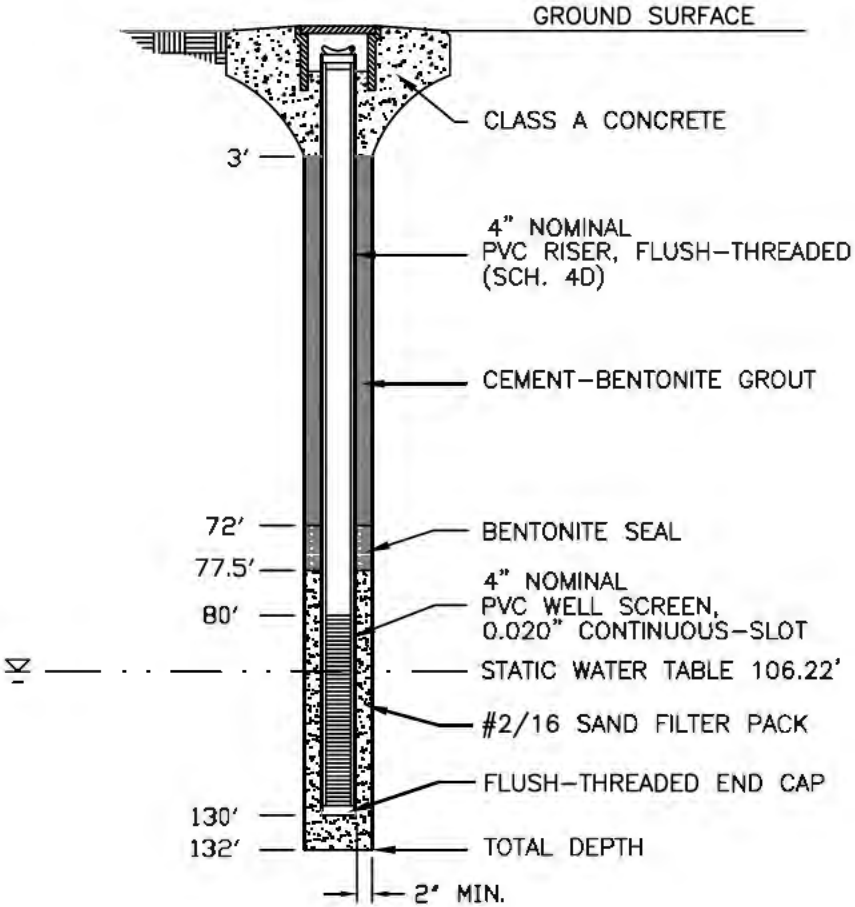

MONITORING WELL
CONSTRUCTION DETAIL

N.T.S.

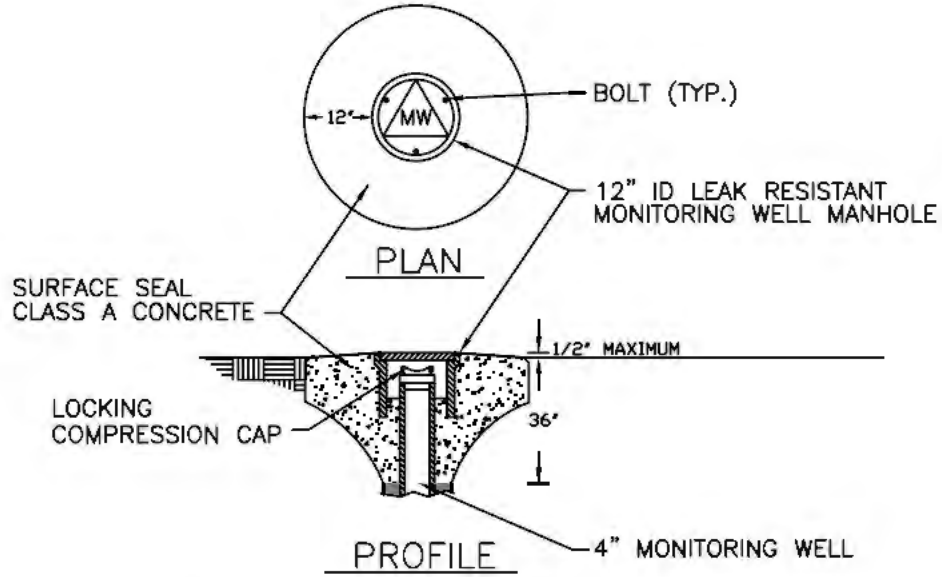

MONITORING WELL FLUSH
MOUNT COMPLETION DETAIL

N.T.S.

FORMER CENCO REFINERY
12345 LAKELAND BLVD
SANTA FE SPRINGS, CALIFORNIA

WELL CONSTRUCTION DETAILS
MW-706

MUREX
environmental, inc

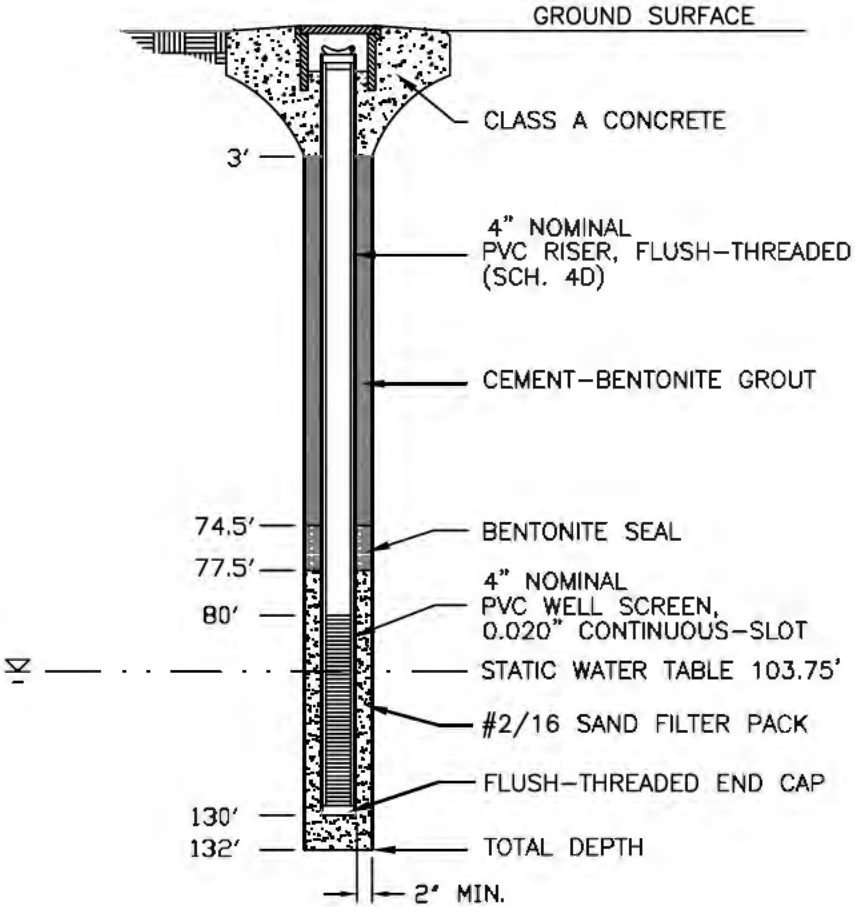

MONITORING WELL
CONSTRUCTION DETAIL

N.T.S.

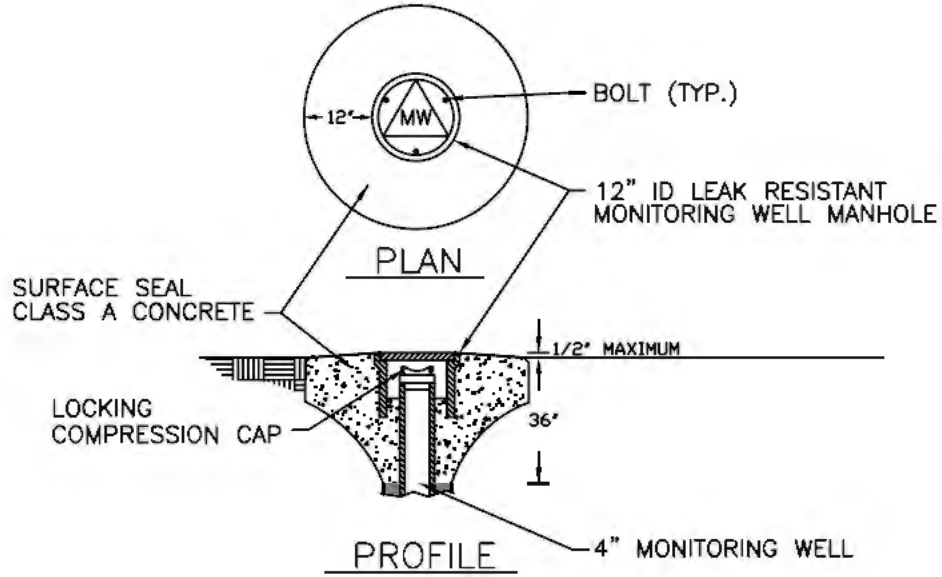

MONITORING WELL FLUSH
MOUNT COMPLETION DETAIL

N.T.S.

FORMER CENCO REFINERY
12345 LAKELAND BLVD
SANTA FE SPRINGS, CALIFORNIA

WELL CONSTRUCTION DETAILS
MW-707

MUREX
environmental, inc

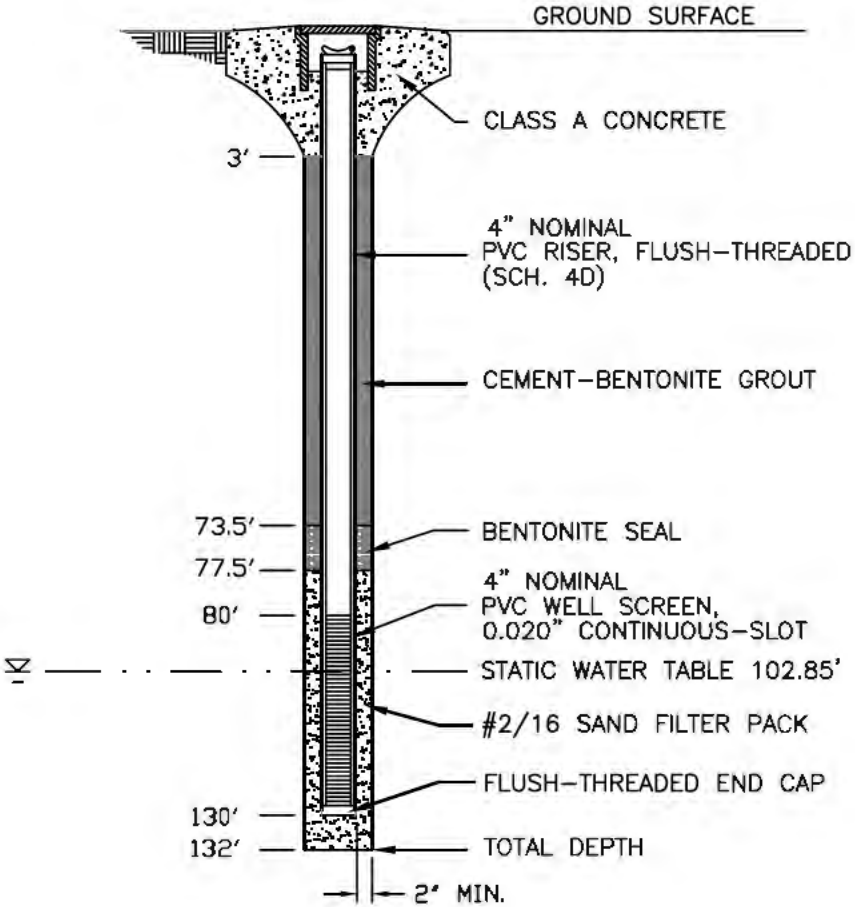

MONITORING WELL
CONSTRUCTION DETAIL

N.T.S.

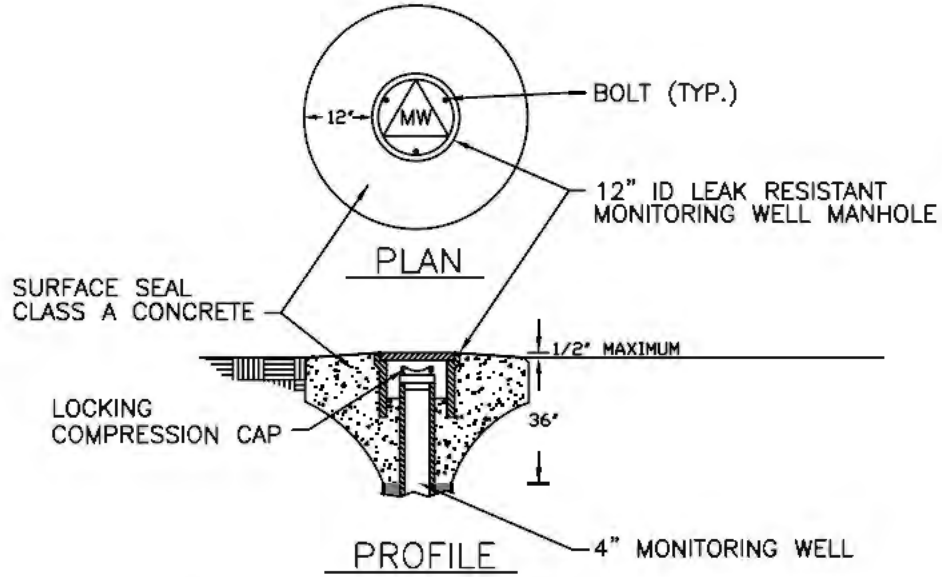

MONITORING WELL FLUSH
MOUNT COMPLETION DETAIL

N.T.S.

FORMER CENCO REFINERY
12345 LAKELAND BLVD
SANTA FE SPRINGS, CALIFORNIA

WELL CONSTRUCTION DETAILS
MW-708

MUREX
environmental, inc

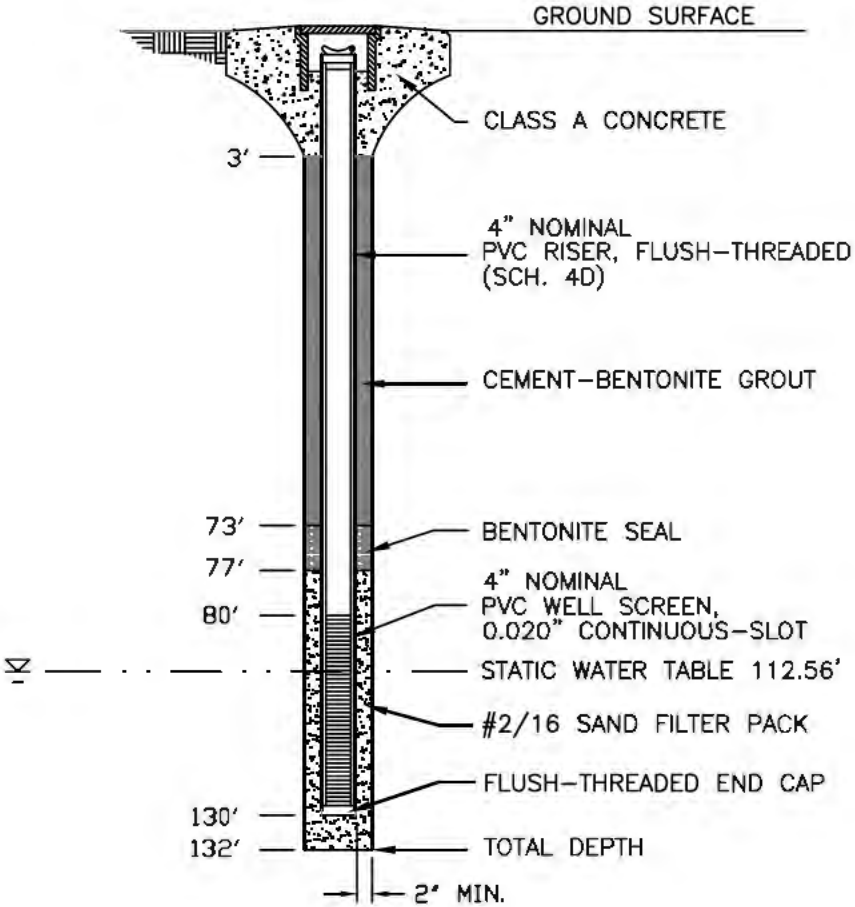

MONITORING WELL
CONSTRUCTION DETAIL

N.T.S.

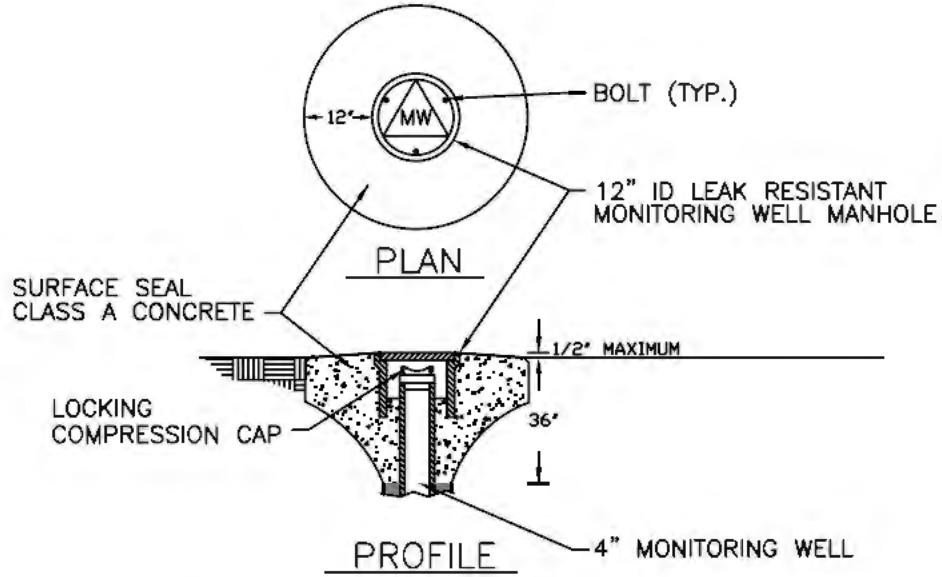

MONITORING WELL FLUSH
MOUNT COMPLETION DETAIL

N.T.S.

FORMER CENCO REFINERY
12345 LAKELAND BLVD
SANTA FE SPRINGS, CALIFORNIA

WELL CONSTRUCTION DETAILS
MW-709

MUREX
environmental, inc

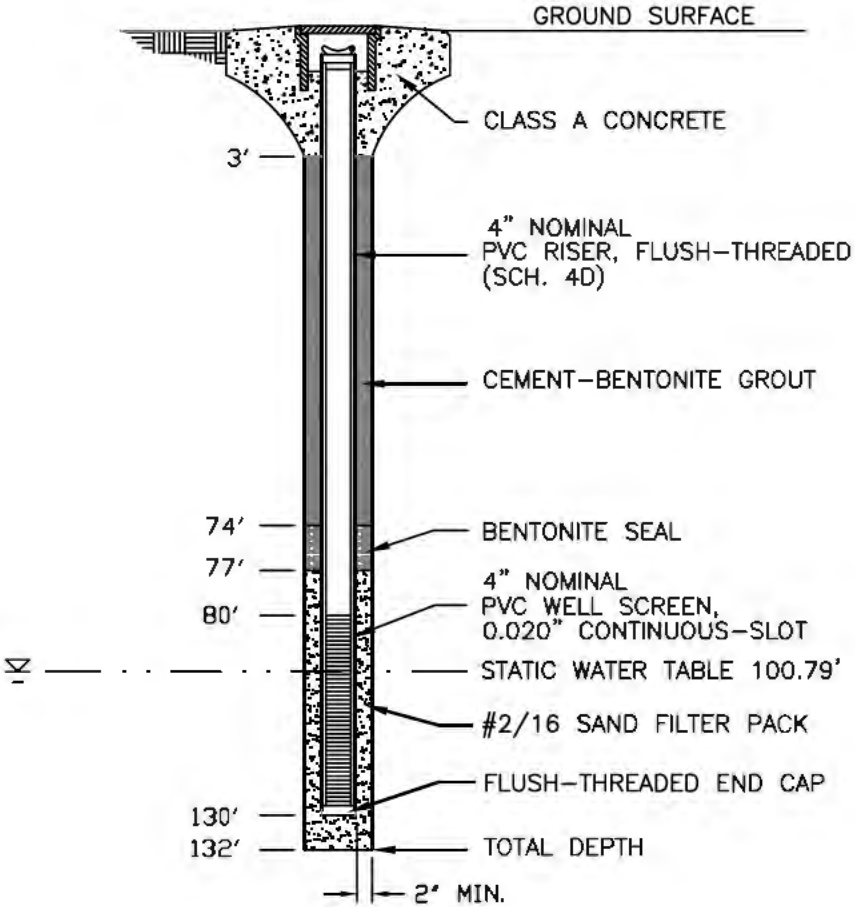

MONITORING WELL
CONSTRUCTION DETAIL

N.T.S.

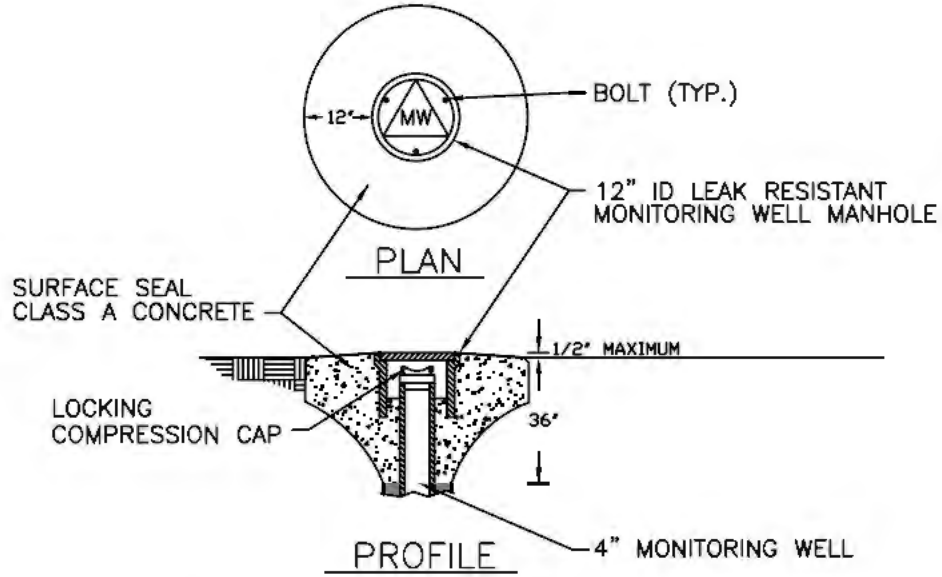

MONITORING WELL FLUSH
MOUNT COMPLETION DETAIL

N.T.S.

FORMER CENCO REFINERY
12345 LAKELAND BLVD
SANTA FE SPRINGS, CALIFORNIA

WELL CONSTRUCTION DETAILS
MW-710

MUREX
environmental, inc

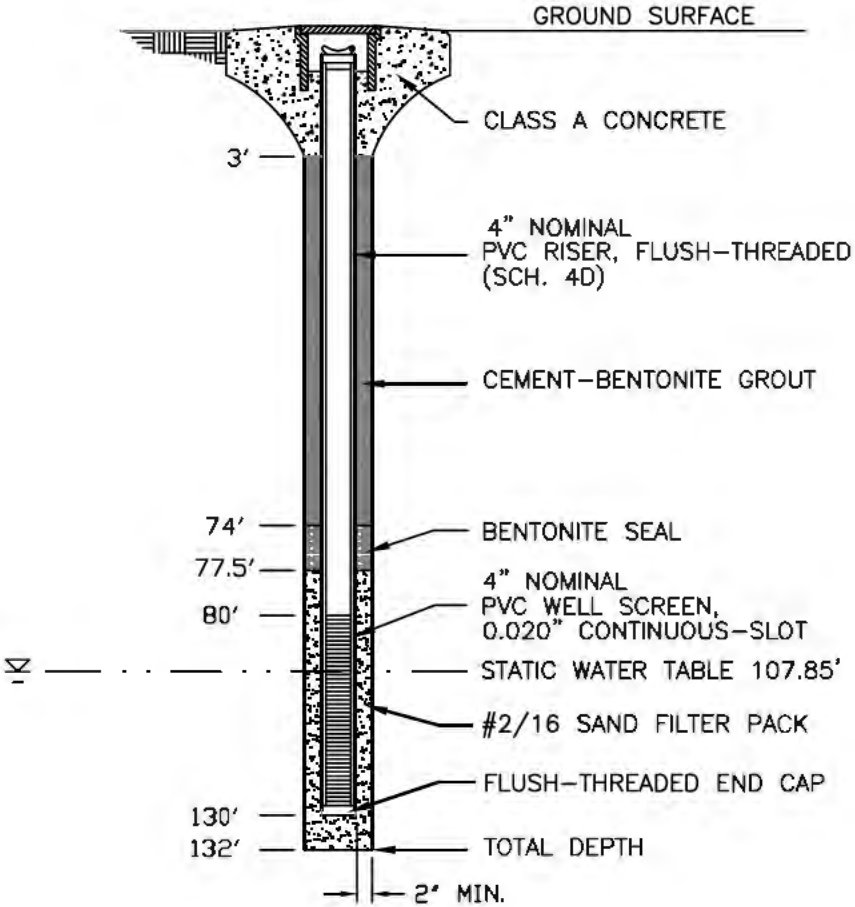

MONITORING WELL
CONSTRUCTION DETAIL

N.T.S.

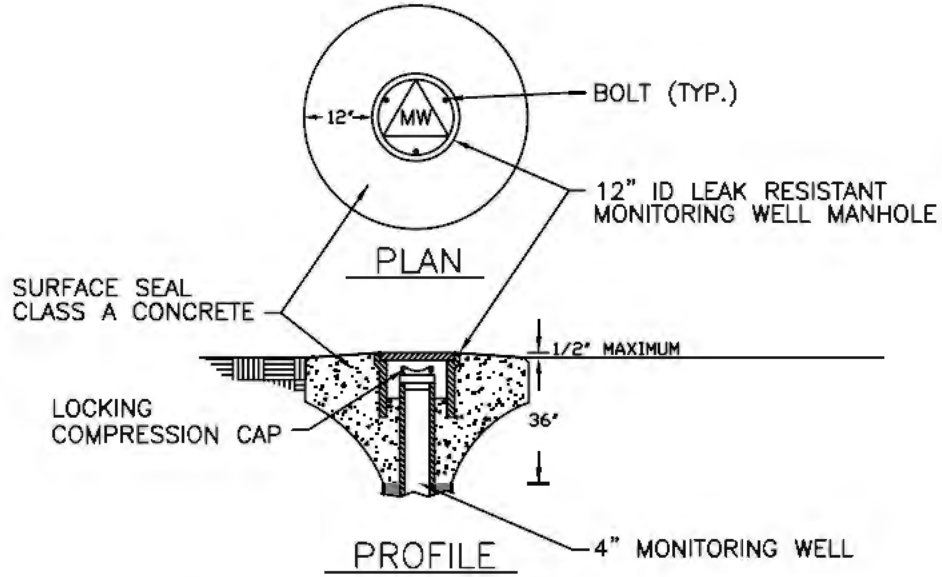

MONITORING WELL FLUSH
MOUNT COMPLETION DETAIL

N.T.S.

FORMER CENCO REFINERY
12345 LAKELAND BLVD
SANTA FE SPRINGS, CALIFORNIA

WELL CONSTRUCTION DETAILS
MW-711

MUREX
environmental, inc

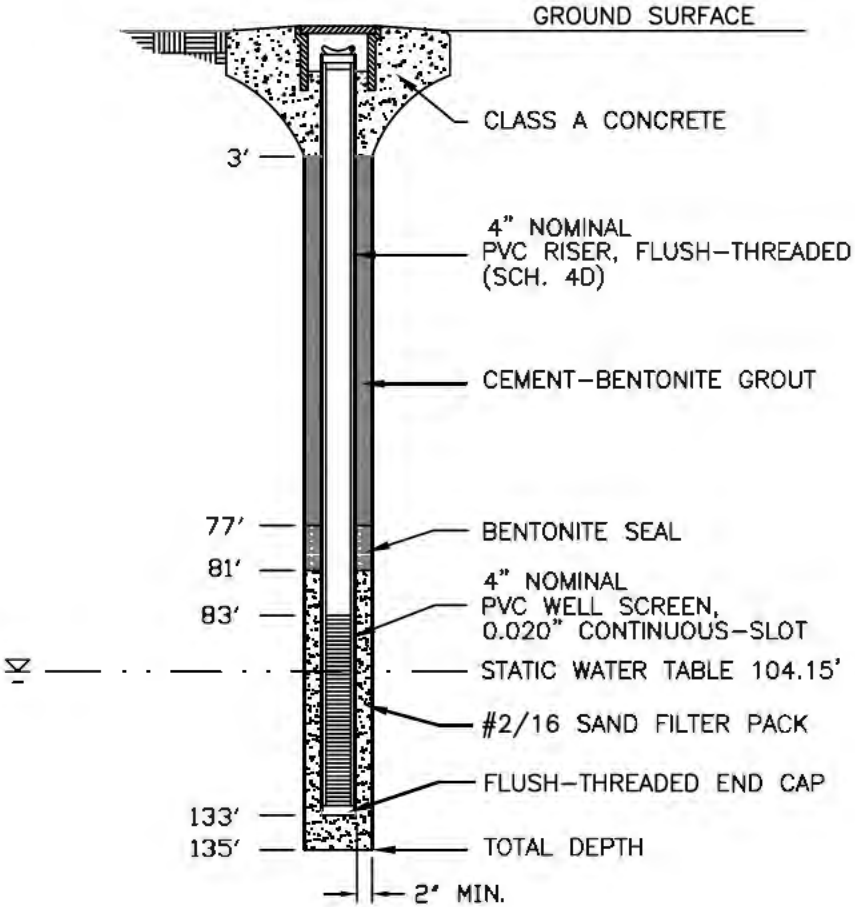

MONITORING WELL
CONSTRUCTION DETAIL

N.T.S.

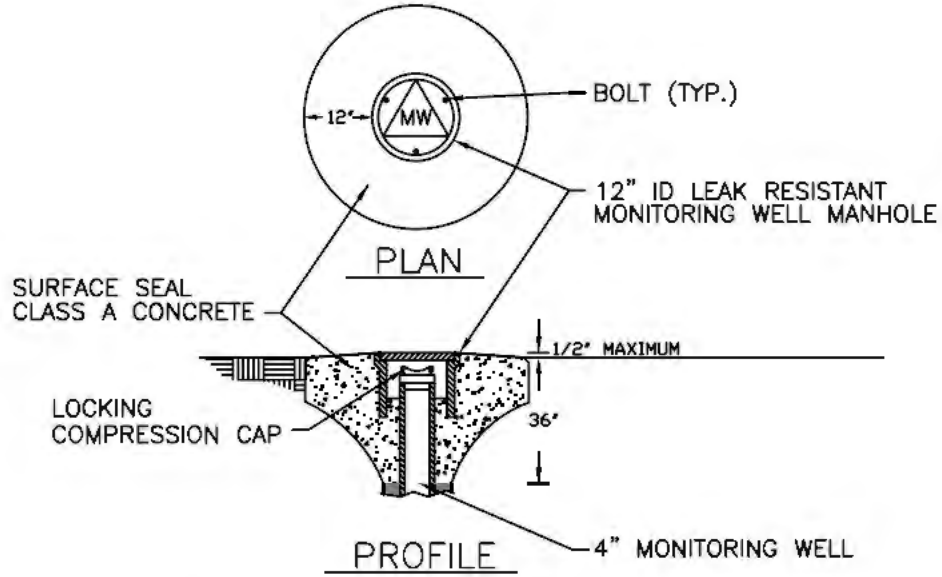

MONITORING WELL FLUSH
MOUNT COMPLETION DETAIL

N.T.S.

FORMER CENCO REFINERY
12345 LAKELAND BLVD
SANTA FE SPRINGS, CALIFORNIA

WELL CONSTRUCTION DETAILS
MW-712

MUREX
environmental, inc

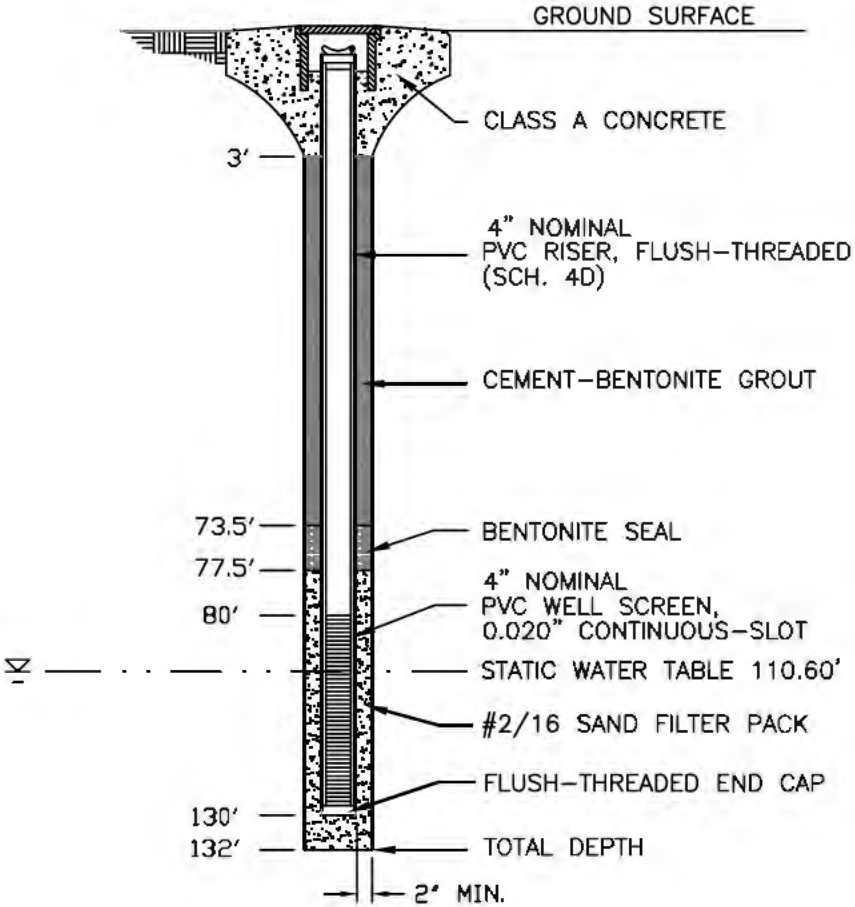

MONITORING WELL
CONSTRUCTION DETAIL

N.T.S.

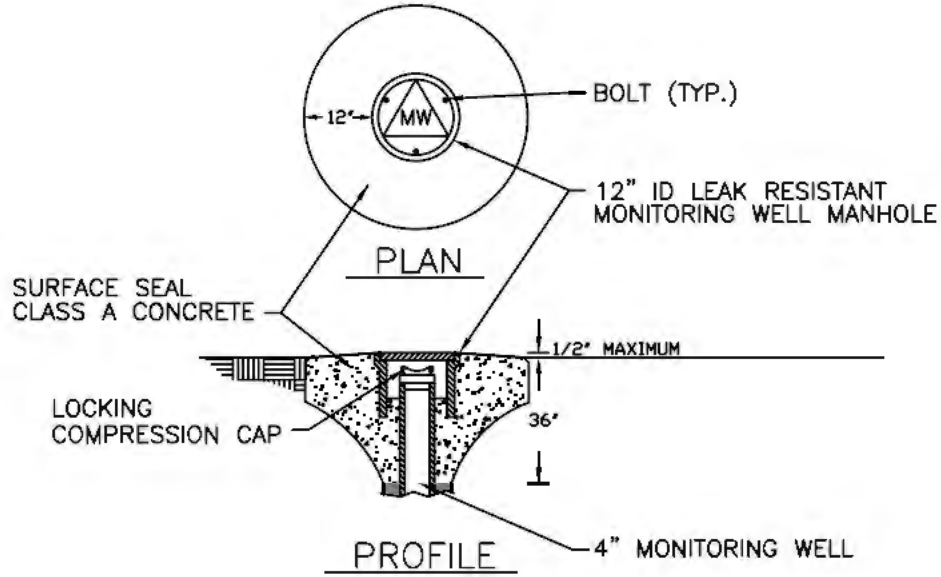

MONITORING WELL FLUSH
MOUNT COMPLETION DETAIL

N.T.S.

FORMER CENCO REFINERY
12345 LAKELAND BLVD
SANTA FE SPRINGS, CALIFORNIA

WELL CONSTRUCTION DETAILS
MW-713

MUREX
environmental, inc

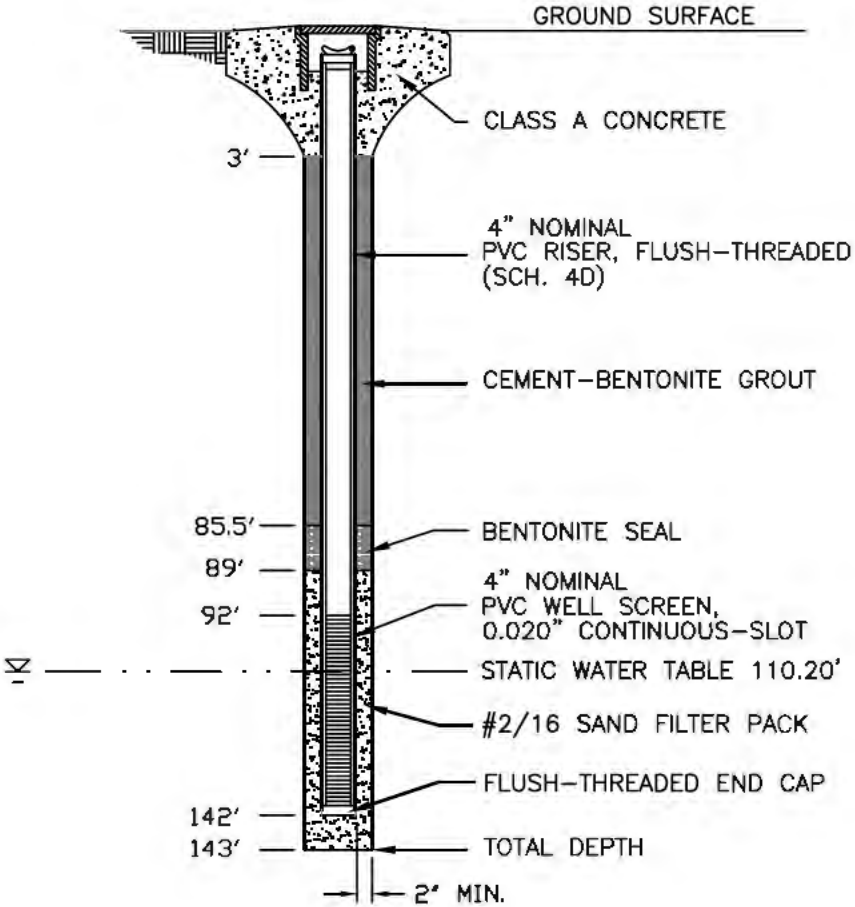

MONITORING WELL
CONSTRUCTION DETAIL

N.T.S.

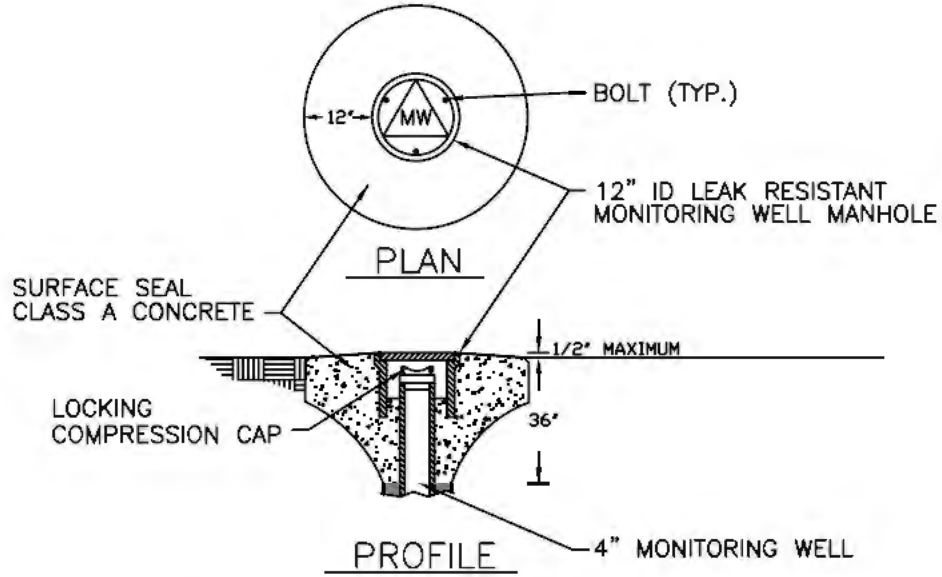

MONITORING WELL FLUSH
MOUNT COMPLETION DETAIL

N.T.S.

FORMER CENCO REFINERY
12345 LAKELAND BLVD
SANTA FE SPRINGS, CALIFORNIA

WELL CONSTRUCTION DETAILS
MW-714

MUREX
environmental, inc

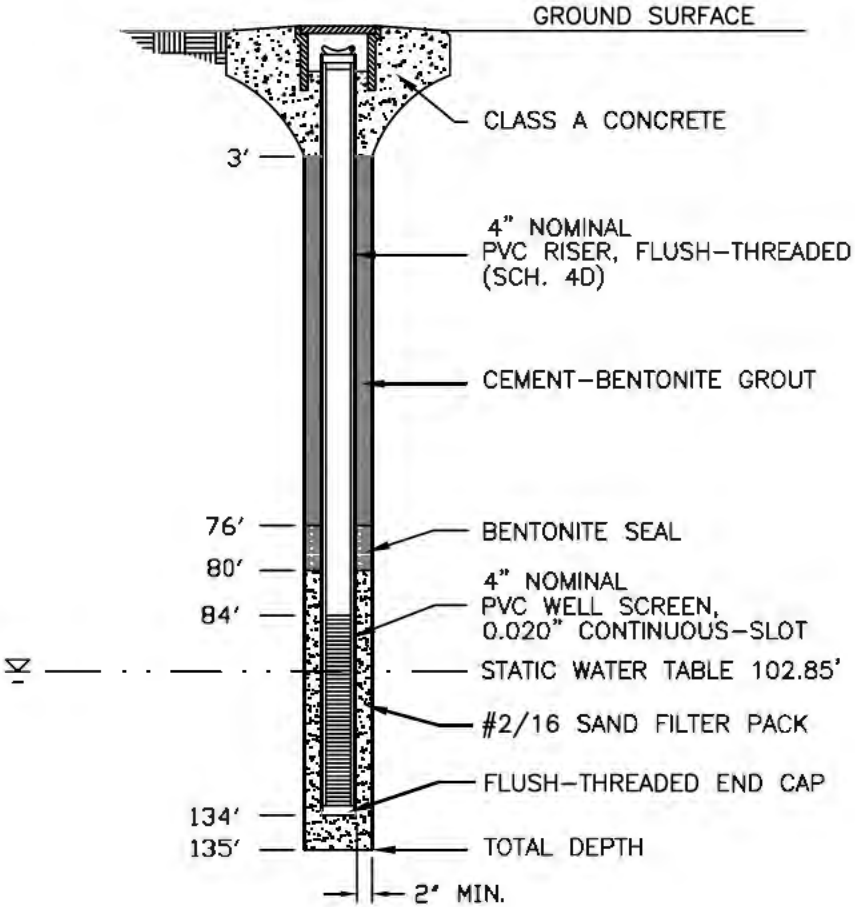

MONITORING WELL
CONSTRUCTION DETAIL

N.T.S.

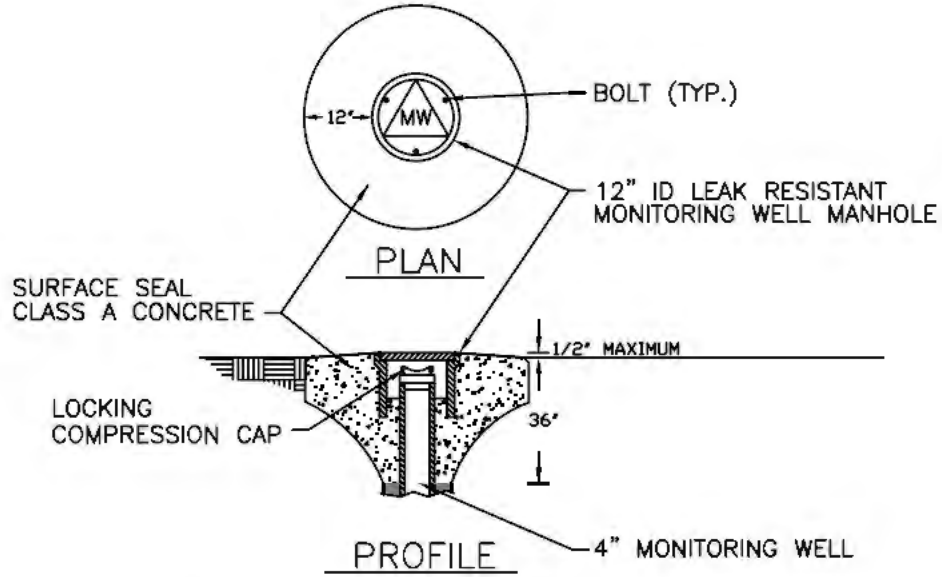

MONITORING WELL FLUSH
MOUNT COMPLETION DETAIL

N.T.S.

FORMER CENCO REFINERY
12345 LAKELAND BLVD
SANTA FE SPRINGS, CALIFORNIA

WELL CONSTRUCTION DETAILS
MW-715

MUREX
environmental, inc

Appendix E

MONITOIRNG WELL DEVELOPMENT LOG

PROJECT NAME:	Lakeland Development (Former CENCO Refinery)	WELL NO.	MW-701
PROJECT NO.:	1003-001-200	DEVELOPED BY:	WDC
DATE:	1/27/2011		

WELL INFORMATION			
TOP OF CASING ELEV.	139.48		(ft.)
WELL DIAMETER	4		(inches)
DEPTH OF WELL	130		(ft.)
DEPTH TO WATER	106.01		(ft.)
HEIGHT OF WATER COLUMN	25.79		(ft.)
CASING VOLUME*	Hgt. x 0.66 Gal./Ft. =	17.02	(gal)
PURGE VOLUME	x 10 =	170.2	(gal)
PRODUCT THICKNESS	NA		(ft.)

WELL CONDITION:
New

WEATHER CONDITIONS:

DEVELOPMENT EQUIPMENT:
WDC Development Rig
Bail, Surge, Purge protocol

PURGE DATA

Time:	Purge Volume (Gal.)	Flow Rate (L./Min.)	pH	Sp.Cond. (ms/cm)	Turbidity NTUs	DO mg/L	Temperature C	TDS g/L	ORP mV	Color	Odor
1300	0	2									
1315	30	2	6.07	1753	1000+		23.1				Slight
1330	67.5	2.5	6.11	1695	581		23.4				"
1345	105	2.5	6.14	1690	168		23.4				"
1400	142.5	2.5	6.26	1709	49		23.4				"
1415	180	2.5	6.09	1741	24		23.4				"

Notes
Bailed 20 gallons
Purged 180 gallons
Total volume removed = 200 gallons

ADDITIONAL INFORMATION:

TOC = Top of well casing

*Casing Volume = r^2h(ft) x 7.48 gal/ft.^{3} 4" well = 0.66 Gal./Foot 2" well = 0.163 Gal./Foot

MONITOIRNG WELL DEVELOPMENT LOG

PROJECT NAME:	Lakeland Development (Former CENCO Refinery)	WELL NO.	MW-702
PROJECT NO.:	1003-001-200	DEVELOPED BY:	WDC
DATE:	1/27/2011		

WELL INFORMATION			
TOP OF CASING ELEV.	140.12		(ft.)
WELL DIAMETER	4		(inches)
DEPTH OF WELL	130		(ft.)
DEPTH TO WATER	105.95		(ft.)
HEIGHT OF WATER COLUMN	24.05		(ft.)
CASING VOLUME*	Hgt. x 0.66 Gal./Ft. =	15.87	(gal)
PURGE VOLUME	x 10 =	158.7	(gal)
PRODUCT THICKNESS	NA		(ft.)

WELL CONDITION:
New

WEATHER CONDITIONS:

DEVELOPMENT EQUIPMENT:
WDC Development Rig
Bail, Surge, Purge protocol

PURGE DATA

Time:	Purge Volume (Gal.)	Flow Rate (L./Min.)	pH	Sp.Cond. (ms/cm)	Turbidity NTUs	DO mg/L	Temperature C	TDS g/L	ORP mV	Color	Odor
925	0	2.5									
930	12.5	2.5	6.22	1649	1000+		23.5				Yes
945	50	2.5	6.02	1570	292		22.8				"
1000	87.5	2.5	6.04	1573	40		24.3				"
1015	125	2.5	6.06	1560	9.3		24.3				"
1025	150	2.5	6.04	1532	7		24.3				"

Notes

Bailed 20 gallons

Purged 150 gallons

Total volume removed = 170 gallons

ADDITIONAL INFORMATION:

TOC = Top of well casing

*Casing Volume = r^2h(ft) x 7.48 gal/ft.^{3}

4" well = 0.66 Gal./Foot

2" well = 0.163 Gal./Foot

MONITOIRNG WELL DEVELOPMENT LOG

PROJECT NAME:	Lakeland Development (Former CENCO Refinery)	WELL NO.	MW-703
PROJECT NO.:	1003-001-200	DEVELOPED BY:	WDC
DATE:	1/27-28/2011		

WELL INFORMATION			
TOP OF CASING ELEV.	137.23		(ft.)
WELL DIAMETER	4		(inches)
DEPTH OF WELL	130		(ft.)
DEPTH TO WATER	107.44		(ft.)
HEIGHT OF WATER COLUMN	22.46		(ft.)
CASING VOLUME*	Hgt. x 0.66 Gal./Ft. =	14.82	(gal)
PURGE VOLUME	x 10 =	148.2	(gal)
PRODUCT THICKNESS	NA		(ft.)

WELL CONDITION:
New

WEATHER CONDITIONS:

DEVELOPMENT EQUIPMENT:
WDC Development Rig
Bail, Surge, Purge protocol

PURGE DATA

Time:	Purge Volume (Gal.)	Flow Rate (L./Min.)	pH	Sp.Cond. (ms/cm)	Turbidity NTUs	DO mg/L	Temperature C	TDS g/L	ORP mV	Color	Odor
940	0	2									
950	20	2	6.14	1787	1000+		22.4			Brown	Yes
1000	40	2	6.03	1741	238		23.1			Gray	Yes
1010	60	2	6.13	1706	242		23.1			Gray	Yes
1020	80	2	6.14	1678	73		23.1			Cldy	Yes
1030	100	2	6.25	1640	29		23.1			Clear	Yes

Notes
Bailed 50 gallons
Purged 100 gallons
Total volume removed = 150 gallons

ADDITIONAL INFORMATION:

TOC = Top of well casing

*Casing Volume = r^2h(ft) x 7.48 gal/ft.^{3}

4" well = 0.66 Gal./Foot

2" well = 0.163 Gal./Foot

MONITOIRNG WELL DEVELOPMENT LOG

PROJECT NAME:	Lakeland Development (Former CENCO Refinery)	WELL NO.	MW-704
PROJECT NO.:	1003-001-200	DEVELOPED BY:	WDC
DATE:	1/26/2011		

WELL INFORMATION			
TOP OF CASING ELEV.	137.66		(ft.)
WELL DIAMETER	4		(inches)
DEPTH OF WELL	130		(ft.)
DEPTH TO WATER	108.98		(ft.)
HEIGHT OF WATER COLUMN	21.02		(ft.)
CASING VOLUME*	Hgt. x 0.66 Gal./Ft. =	13.87	(gal)
PURGE VOLUME	x 10 =	138.7	(gal)
PRODUCT THICKNESS	NA		(ft.)

WELL CONDITION:
New

WEATHER CONDITIONS:

DEVELOPMENT EQUIPMENT:
WDC Development Rig
Bail, Surge, Purge protocol

PURGE DATA

Time:	Purge Volume (Gal.)	Flow Rate (L./Min.)	pH	Sp.Cond. (ms/cm)	Turbidity NTUs	DO mg/L	Temperature C	TDS g/L	ORP mV	Color	Odor
1350		0.5									
1405	7.5	0.5	6.22	1525	979		24.9				
1435	22.5	0.5	6.02	1553	985		25.7	Ran Dry at 1535			
1535	22.5	0.5									
1540	25	0.5	6.08	1443	160		25.3				
1551	30	0.5						Ran Dry - will let recharge overnight			

Notes
Bailed 30 gallons
Purged 30 gallons
Total volume removed =

ADDITIONAL INFORMATION:

TOC = Top of well casing

*Casing Volume = r^2h(ft) x 7.48 gal/ft.^{3}

4" well = 0.66 Gal./Foot

2" well = 0.163 Gal./Foot

MONITOIRNG WELL DEVELOPMENT LOG

PROJECT NAME:	Lakeland Development (Former CENCO Refinery)	WELL NO.	MW-705
PROJECT NO.:	1003-001-200	DEVELOPED BY:	WDC
DATE:	1/25/2011		

WELL INFORMATION			
TOP OF CASING ELEV.	141.94		(ft.)
WELL DIAMETER	4		(inches)
DEPTH OF WELL	130		(ft.)
DEPTH TO WATER	109.82		(ft.)
HEIGHT OF WATER COLUMN	23.33		(ft.)
CASING VOLUME*	Hgt. x 0.66 Gal./Ft. =	15.4	(gal)
PURGE VOLUME	x 10 =	150.4	(gal)
PRODUCT THICKNESS	NA		(ft.)

WELL CONDITION:
New

WEATHER CONDITIONS:

DEVELOPMENT EQUIPMENT:
WDC Development Rig
Bail, Surge, Purge protocol

PURGE DATA

Time:	Purge Volume (Gal.)	Flow Rate (L./Min.)	pH	Sp.Cond. (ms/cm)	Turbidity NTUs	DO mg/L	Temperature C	TDS g/L	ORP mV	Color	Odor
1440	0	1.5									
1510	45	1.5	5.96	1491	52		25				
1523	65	1.5	6.04	1482	5		25.3				
1533	80	1.5	6.01	1501	5		25.5				

Notes

Bailed 75 gallons

Purged 80 gallons

Total volume removed = 155 gallons

ADDITIONAL INFORMATION:

TOC = Top of well casing

*Casing Volume = r^2h(ft) x 7.48 gal/ft.^{3}

4" well = 0.66 Gal./Foot

2" well = 0.163 Gal./Foot

MONITOIRNG WELL DEVELOPMENT LOG

PROJECT NAME:	Lakeland Development (Former CENCO Refinery)	WELL NO.	MW-706 Page 1 of 2
PROJECT NO.:	1003-001-200	DEVELOPED BY:	WDC
DATE:	1/24-25/2011		

WELL INFORMATION			
TOP OF CASING ELEV.	139.30		(ft.)
WELL DIAMETER	4		(inches)
DEPTH OF WELL	130		(ft.)
DEPTH TO WATER	106.22		(ft.)
HEIGHT OF WATER COLUMN	22.28		(ft.)
CASING VOLUME*	Hgt. x 0.66 Gal./Ft. =	14.7	(gal)
PURGE VOLUME	x 10 =	147	(gal)
PRODUCT THICKNESS	NA		(ft.)

WELL CONDITION:
New

WEATHER CONDITIONS:

DEVELOPMENT EQUIPMENT:
WDC Development Rig
Bail, Surge, Purge protocol

PURGE DATA

Time:	Purge Volume (Gal.)	Flow Rate (L./Min.)	pH	Sp.Cond. (ms/cm)	Turbidity NTUs	DO mg/L	Temperature C	TDS g/L	ORP mV	Color	Odor
1145		1.25									
1155	12.5	1.25	6.82	1485	438		26.4	Ran dry			
1230	12.5	1.25									
1235	19.75	1.25	6.39	1253	855		26.6				
1240	25	1.25	6.64	1412	802		27.1	Ran dry			
1328	25	1.25									
1333	31.25	1.25	6.44	1416	764		25.9				
1338	37.5	1.25	6.49	1445	863		27.40	Ran dry			
1422	37.5	1.25									
1427	43.75	1.25	6.3	1448	861		26.5	Ran dry			
1432	50	1.25									

Notes

ADDITIONAL INFORMATION:

TOC = Top of well casing

*Casing Volume = r^2h(ft) x 7.48 gal/ft.^{3}

4" well = 0.66 Gal./Foot

2" well = 0.163 Gal./Foot

MONITOIRNG WELL DEVELOPMENT LOG

PROJECT NAME:	Lakeland Development (Former CENCO Refinery)	WELL NO.	MW-706 Page 2 of 2
PROJECT NO.:	1003-001-200	DEVELOPED BY:	WDC
DATE:	1/24-25/2011		

WELL INFORMATION			
TOP OF CASING ELEV.	139.30		(ft.)
WELL DIAMETER	4		(inches)
DEPTH OF WELL	130		(ft.)
DEPTH TO WATER	106.22		(ft.)
HEIGHT OF WATER COLUMN	22.28		(ft.)
CASING VOLUME*	Hgt. x 0.66 Gal./Ft. =	14.7	(gal)
PURGE VOLUME	x 10 =	147	(gal)
PRODUCT THICKNESS	NA		(ft.)

WELL CONDITION:
New

WEATHER CONDITIONS:

DEVELOPMENT EQUIPMENT:
WDC Development Rig
Bail, Surge, Purge protocol

PURGE DATA

Time:	Purge Volume (Gal.)	Flow Rate (L./Min.)	pH	Sp.Cond. (ms/cm)	Turbidity NTUs	DO mg/L	Temperature C	TDS g/L	ORP mV	Color	Odor
1525	43.75	1	6.39	1354	1000+		24.7				Slight
1530	45.25	0.5	6.49	1401	679		26.2				Slight
1540	50.25	0.5	6.56	1520	845		27.3				Slight
1546	55.25	0.5	6.50	1446	763		27.9	Ran dry			Slight
745	60	0.5	5.93	1399	121		23.7				Slight
800	72.5	0.5	6.05	1447	132		24.5				Slight
815	80	0.5	6.09	1445	298		24.6				Slight
845	95	0.5	6.01	1538	94		25.50				Slight
900	103	0.5	6.21	1520	52		25.4				Slight

Notes

Bailed 55 gallons

Purged 103 gallons

Total volume removed = 158 gallons

ADDITIONAL INFORMATION:

TOC = Top of well casing

*Casing Volume = r^2h(ft) x 7.48 gal/ft.^{3} 4" well = 0.66 Gal./Foot 2" well = 0.163 Gal./Foot

MONITOIRNG WELL DEVELOPMENT LOG

PROJECT NAME:	Lakeland Development (Former CENCO Refinery)	WELL NO.	MW-707
PROJECT NO.:	1003-001-200	DEVELOPED BY:	WDC
DATE:	1/28-31/2011		

WELL INFORMATION			
TOP OF CASING ELEV.	128.43		(ft.)
WELL DIAMETER	4		(inches)
DEPTH OF WELL	130		(ft.)
DEPTH TO WATER	103.75		(ft.)
HEIGHT OF WATER COLUMN	26.25		(ft.)
CASING VOLUME*	Hgt. x 0.66 Gal./Ft. =	17.33	(gal)
PURGE VOLUME	x 10 =	173.3	(gal)
PRODUCT THICKNESS	NA		(ft.)

WELL CONDITION:
New

WEATHER CONDITIONS:

DEVELOPMENT EQUIPMENT:
WDC Development Rig
Bail, Surge, Purge protocol

PURGE DATA

Time:	Purge Volume (Gal.)	Flow Rate (L./Min.)	pH	Sp.Cond. (ms/cm)	Turbidity NTUs	DO mg/L	Temperature C	TDS g/L	ORP mV	Color	Odor
1355		2								Brown	Yes
1405	20	2	6.24	1581	226		24.7			Cloudy	Yes
1415	40	2	6.19	1652	712		24.8			Yellow	Yes
1425	48	0.75	6.18	1567	198		25.9			Yellow	Yes
1435	55	0.75	6.24	1606	98		25.9			Cldy Clear	Yes
1445	63	0.75	6.27	1616	153		26			Cldy Clear	Yes
1455	70	0.75	6.18	1604	37		26.4			Clear	Yes
1505	78	0.75	6.24	1619	35		26.50			Clear	Yes
1515	85	0.75	6.31	1625	22		26.5			Clear	Yes
1525	92.5	0.75	6.22	1610	12		26.5			Clear	Yes
1535	100	0.75	6.22	1618	9		26.5			Clear	Yes

Notes

Bailed 85 gallons

Purged 100 gallons

Total volume removed = 185 gallons

ADDITIONAL INFORMATION:

TOC = Top of well casing

*Casing Volume = r^2h(ft) x 7.48 gal/ft.^{3}

4" well = 0.66 Gal./Foot

2" well = 0.163 Gal./Foot

MONITOIRNG WELL DEVELOPMENT LOG

PROJECT NAME:	Lakeland Development (Former CENCO Refinery)	WELL NO.	MW-708
PROJECT NO.:	1003-001-200	DEVELOPED BY:	WDC
DATE:	2/2/2011		

WELL INFORMATION				
TOP OF CASING ELEV.	126.26			(ft.)
WELL DIAMETER	4			(inches)
DEPTH OF WELL	130			(ft.)
DEPTH TO WATER	102.85	Depth to Product	102.72	(ft.)
HEIGHT OF WATER COLUMN	25.13			(ft.)
CASING VOLUME*	Hgt. x 0.66 Gal./Ft. =		16.58	(gal)
PURGE VOLUME		x 10 =	165.8	(gal)
PRODUCT THICKNESS		0.13		(ft.)

WELL CONDITION:
New

WEATHER CONDITIONS:

DEVELOPMENT EQUIPMENT:
WDC Development Rig
Bail, Surge, Purge protocol

PURGE DATA

Time:	Purge Volume (Gal.)	Flow Rate (L./Min.)	pH	Sp.Cond. (ms/cm)	Turbidity NTUs	DO mg/L	Temperature C	TDS g/L	ORP mV	Color	Odor
856		3									
905	27	3	6.00	1899	252		22.5			Cldy	Strong
920	72	3	6.00	1777	138		23.3			Cldy	Strong
935	117	3	5.99	1769	131		23.5			Cldy	Strong
936	120	3									

Notes

Bailed 50 gallons

Purged 120 gallons

Total volume removed = 170 gallons

ADDITIONAL INFORMATION:

TOC = Top of well casing

*Casing Volume = r^2h(ft) x 7.48 gal/ft.^{3}

4" well = 0.66 Gal./Foot

2" well = 0.163 Gal./Foot

MONITOIRNG WELL DEVELOPMENT LOG

PROJECT NAME:	Lakeland Development (Former CENCO Refinery)	WELL NO.	MW-709
PROJECT NO.:	1003-001-200	DEVELOPED BY:	WDC
DATE:	1/28/2011		

WELL INFORMATION			
TOP OF CASING ELEV.	139.78		(ft.)
WELL DIAMETER	4		(inches)
DEPTH OF WELL	130		(ft.)
DEPTH TO WATER	112.56		(ft.)
HEIGHT OF WATER COLUMN	17.44		(ft.)
CASING VOLUME*	Hgt. x 0.66 Gal./Ft. =	11.51	(gal)
PURGE VOLUME	x 10 =	115.1	(gal)
PRODUCT THICKNESS	NA		(ft.)

WELL CONDITION:
New

WEATHER CONDITIONS:

DEVELOPMENT EQUIPMENT:
WDC Development Rig
Bail, Surge, Purge protocol

PURGE DATA

Time:	Purge Volume (Gal.)	Flow Rate (L./Min.)	pH	Sp.Cond. (ms/cm)	Turbidity NTUs	DO mg/L	Temperature C	TDS g/L	ORP mV	Color	Odor
800		1.25								Brown	Slight
805	6.25	0.5								Cldy Gray	Slight
815	11.25	0.5								Cldy Gray	Slight
820	11.25	0.5								Cldy Gray	Slight
830	16.25	0.5	6.25	1430	481		23.4			Gray/Green	Slight
840	21.25	0.5	6.56	1485	612		23.3			Gray/Green	Slight
850	26.25	0.5	6.30	1560	532		24			Gray/Green	Slight
910	36.25	0.5	6.27	1689	138		23.80			Gray/Green	Slight
930	46.25	0.5	6.28	1788	83		24.2			Cldy Clear	Slight
950	56.25	0.5	6.27	1840	33		24.4			Clear	Slight
1010	66.25	0.5	6.27	1885	15		24.4			Clear	Slight

Notes

Bailed 55 gallons

Purged 66 25 gallons

Total volume removed = 121.25

ADDITIONAL INFORMATION:

TOC = Top of well casing

*Casing Volume = r^2h(ft) x 7.48 gal/ft.^{3}

4" well = 0.66 Gal./Foot

2" well = 0.163 Gal./Foot

MONITOIRNG WELL DEVELOPMENT LOG

PROJECT NAME:	Lakeland Development (Former CENCO Refinery)	WELL NO.	MW-710
PROJECT NO.:	1003-001-200	DEVELOPED BY:	WDC
DATE:	2/2/2011		

WELL INFORMATION			
TOP OF CASING ELEV.	121.99		(ft.)
WELL DIAMETER	4		(inches)
DEPTH OF WELL	130		(ft.)
DEPTH TO WATER	100.79		(ft.)
HEIGHT OF WATER COLUMN	29.21		(ft.)
CASING VOLUME*	Hgt. x 0.66 Gal./Ft. =	19.28	(gal)
PURGE VOLUME	x 10 =	192.8	(gal)
PRODUCT THICKNESS	NA		(ft.)

WELL CONDITION:
New

WEATHER CONDITIONS:

DEVELOPMENT EQUIPMENT:
WDC Development Rig
Bail, Surge, Purge protocol

PURGE DATA

Time:	Purge Volume (Gal.)	Flow Rate (L./Min.)	pH	Sp.Cond. (ms/cm)	Turbidity NTUs	DO mg/L	Temperature C	TDS g/L	ORP mV	Color	Odor
1157		2.5									
1205	20	2.5	6.32	1579	239		21.7			Cldy Yellow	No
1220	57.5	2.5	6.18	1586	122		21.9			Cldy Yellow	No
1250	132.5	2.5	6.18	1592	14		22			Clear	No
1310	182.5	2.5	6.18	1590	10		22				

Notes
Bailed 30 gallons
Purged 182.5 gallons
Total volume removed = 212.5

ADDITIONAL INFORMATION:

TOC = Top of well casing

*Casing Volume = r^2h(ft) x 7.48 gal/ft.^{3}

4" well = 0.66 Gal./Foot

2" well = 0.163 Gal./Foot

MONITOIRNG WELL DEVELOPMENT LOG

PROJECT NAME:	Lakeland Development (Former CENCO Refinery)	WELL NO.	MW-711
PROJECT NO.:	1003-001-200	DEVELOPED BY:	WDC
DATE:	2/2/2011		

WELL INFORMATION			
TOP OF CASING ELEV.	127.84		(ft.)
WELL DIAMETER	4		(inches)
DEPTH OF WELL	130		(ft.)
DEPTH TO WATER	107.85		(ft.)
HEIGHT OF WATER COLUMN	22.15		(ft.)
CASING VOLUME*	Hgt. x 0.66 Gal./Ft. =	14.62	(gal)
PURGE VOLUME	x 10 =	146.2	(gal)
PRODUCT THICKNESS	NA		(ft.)

WELL CONDITION:
New

WEATHER CONDITIONS:

DEVELOPMENT EQUIPMENT:
WDC Development Rig
Bail, Surge, Purge protocol

PURGE DATA

Time:	Purge Volume (Gal.)	Flow Rate (L./Min.)	pH	Sp.Cond. (ms/cm)	Turbidity NTUs	DO mg/L	Temperature C	TDS g/L	ORP mV	Color	Odor
1350		2.5									Yes
1355	13	2.5									Yes
1358	20	1									Yes
1405	27	1	6.18	1806	1000+		23.1			Vcldy Brn	Yes
1430	52	1	6.07	1668	495		22.8			Vcldy Brn	Yes
1500	82	1	6.00	1642	199		23			Cldy Brn	Yes
1530	112	1	5.99	1603	231		22.8			Cloudy	Yes

Notes
Bailed 35 gallons
Purged 112 gallons
Total volume removed = 147 gallons

ADDITIONAL INFORMATION:

TOC = Top of well casing

*Casing Volume = r^2h(ft) x 7.48 gal/ft.^{3} 4" well = 0.66 Gal./Foot 2" well = 0.163 Gal./Foot

MONITOIRNG WELL DEVELOPMENT LOG

PROJECT NAME:	Lakeland Development (Former CENCO Refinery)	WELL NO.	MW-712
PROJECT NO.:	1003-001-200	DEVELOPED BY:	WDC
DATE:	2/4-6/2011		

WELL INFORMATION			
TOP OF CASING ELEV.	123.31		(ft.)
WELL DIAMETER	4		(inches)
DEPTH OF WELL	133		(ft.)
DEPTH TO WATER	105.14		(ft.)
HEIGHT OF WATER COLUMN	28.85		(ft.)
CASING VOLUME*	Hgt. x 0.66 Gal./Ft. =	19.04	(gal)
PURGE VOLUME	x 10 =	190.4	(gal)
PRODUCT THICKNESS	NA		(ft.)

WELL CONDITION:
New

WEATHER CONDITIONS:

DEVELOPMENT EQUIPMENT:
WDC Development Rig
Bail, Surge, Purge protocol

PURGE DATA

Time:	Purge Volume (Gal.)	Flow Rate (L./Min.)	pH	Sp.Cond. (ms/cm)	Turbidity NTUs	DO mg/L	Temperature C	TDS g/L	ORP mV	Color	Odor
Parameters taken by WDC - not recorded											

Notes

Bailed 55 gallons

Purged 150 gallons

Total volume removed = 205 gallons

ADDITIONAL INFORMATION:

TOC = Top of well casing

*Casing Volume = r^2h(ft) x 7.48 gal/ft.^{3}

4" well = 0.66 Gal./Foot

2" well = 0.163 Gal./Foot

MONITOIRNG WELL DEVELOPMENT LOG

PROJECT NAME:	Lakeland Development (Former CENCO Refinery)	WELL NO.	MW-713
PROJECT NO.:	1003-001-200	DEVELOPED BY:	WDC
DATE:	2/6-7/2011		

WELL INFORMATION			
TOP OF CASING ELEV.			(ft.)
WELL DIAMETER	4		(inches)
DEPTH OF WELL	130		(ft.)
DEPTH TO WATER	110.60		(ft.)
HEIGHT OF WATER COLUMN	19.4		(ft.)
CASING VOLUME*	Hgt. x 0.66 Gal./Ft. =	12.8	(gal)
PURGE VOLUME	x 10 =	128	(gal)
PRODUCT THICKNESS	NA		(ft.)

WELL CONDITION:
New

WEATHER CONDITIONS:

DEVELOPMENT EQUIPMENT:
WDC Development Rig
Bail, Surge, Purge protocol

PURGE DATA

Time:	Purge Volume (Gal.)	Flow Rate (L./Min.)	pH	Sp.Cond. (ms/cm)	Turbidity NTUs	DO mg/L	Temperature C	TDS g/L	ORP mV	Color	Odor
Parameters taken by WDC - not recorded											

Notes
Bailed x gallons
Purged x gallons
Total volume removed =

ADDITIONAL INFORMATION:

TOC = Top of well casing

*Casing Volume = r^2h(ft) x 7.48 gal/ft.^{3}

4" well = 0.66 Gal./Foot

2" well = 0.163 Gal./Foot

MONITOIRNG WELL DEVELOPMENT LOG

PROJECT NAME:	Lakeland Development (Former CENCO Refinery)	WELL NO.	MW-714
PROJECT NO.:	1003-001-200	DEVELOPED BY:	WDC
DATE:	2/7/2011		

WELL INFORMATION		
TOP OF CASING ELEV.		(ft.)
WELL DIAMETER	4	(inches)
DEPTH OF WELL	Measured by WDC- not recorded	(ft.)
DEPTH TO WATER		(ft.)
HEIGHT OF WATER COLUMN		(ft.)
CASING VOLUME*	Hgt. x 0.66 Gal./Ft. =	(gal)
PURGE VOLUME	x 10 =	(gal)
PRODUCT THICKNESS	NA	(ft.)

WELL CONDITION:
New

WEATHER CONDITIONS:

DEVELOPMENT EQUIPMENT:
WDC Development Rig
Bail, Surge, Purge protocol

PURGE DATA

Time:	Purge Volume (Gal.)	Flow Rate (L./Min.)	pH	Sp.Cond. (ms/cm)	Turbidity NTUs	DO mg/L	Temperature C	TDS g/L	ORP mV	Color	Odor
Parameters taken by WDC - not recorded											

Notes
Bailed x gallons
Purged x gallons
Total volume removed =

ADDITIONAL INFORMATION:

TOC = Top of well casing

*Casing Volume = r^2h(ft) x 7.48 gal/ft.^{3}

4" well = 0.66 Gal./Foot

2" well = 0.163 Gal./Foot

MONITOIRNG WELL DEVELOPMENT LOG

PROJECT NAME:	Lakeland Development (Former CENCO Refinery)	WELL NO.	MW-715
PROJECT NO.:	1003-001-200	DEVELOPED BY:	WDC
DATE:	2/11/2011		

WELL INFORMATION			
TOP OF CASING ELEV.	116.22		(ft.)
WELL DIAMETER	4		(inches)
DEPTH OF WELL	134		(ft.)
DEPTH TO WATER	102.58		(ft.)
HEIGHT OF WATER COLUMN	31.42		(ft.)
CASING VOLUME*	Hgt. x 0.66 Gal./Ft. =	20.74	(gal)
PURGE VOLUME	x 10 =	207.4	(gal)
PRODUCT THICKNESS	NA		(ft.)

WELL CONDITION:
New

WEATHER CONDITIONS:

DEVELOPMENT EQUIPMENT:
WDC Development Rig
Bail, Surge, Purge protocol

PURGE DATA

Time:	Purge Volume (Gal.)	Flow Rate (L./Min.)	pH	Sp.Cond. (ms/cm)	Turbidity NTUs	DO mg/L	Temperature C	TDS g/L	ORP mV	Color	Odor
955		1.5								Brown	Strong
1000	15	2	8.64	1800	1000+		22.2			Brown	Strong
1012	35	2.5	7.67	1647	176		24.5			Lt Brown	Strong
1025	60	2.5	8.17	1622	121		24.9			Lt Brown	Strong
1035	85	2.5	7.30	1644	87		25			Cloudy	Strong
1045	110	2.5	7.42	1649	23.8		25			Clear	Strong
1055	135	2.5	7.86	1660	7.11		25.5			Clear	Strong
1105	160	2.5	7.72	1652	4.74		25.00			Clear	Strong
1115	185	2.5	7.51	1651	1.34		24.9			Clear	Strong
1125	210	2.5	7.5	1657	0		25.1			Clear	Strong

Notes

Bailed 40 gallons

Purged 210 gallons

Total volume removed = 250

ADDITIONAL INFORMATION:

TOC = Top of well casing

*Casing Volume = r^2h(ft) x 7.48 gal/ft.^{3} 4" well = 0.66 Gal./Foot 2" well = 0.163 Gal./Foot

Appendix F

Manifest

SOIL SAFE OF CA – TPST
Non-Hazardous Soils

↓ Manifest # ↓

Generator and/or Consultant

Date of Shipment:	Responsible for Payment:	Transport Truck #:	Facility #:	Approval Number:	Load #
12/17/10		394/732	A07	36520	001

Generator's Name and Billing Address: LAKELAND DEVELOPMENT COMPANY 12345 LAKELAND RD SANTA FE SPRINGS, CA 90670	Generator's Phone #: 562-944-6111 Person to Contact: FAX#:	Customer Account Number
Consultant's Name and Billing Address:	Consultant's Phone #: Person to Contact: FAX#:	Customer Account Number
Generation Site (Transport from): *(name & address)* CENCO OIL REFINERY 12345 LAKELAND RD. SANTA FE SPRINGS, CA 90670	Site Phone #: Person to Contact: FAX#:	
Designated Facility (Transport to): *(name & address)* SOIL SAFE 12328 HIBISCUS AVENUE ADELANTO, CA 92301	Facility Phone #: (800) 862-8001 Person to Contact: DELLENA JEFFREY FAX#: (760) 246-8004	
Transporter Name and Mailing Address: BELSHIRE 25971 TOWNE CENTRE DRIVE FOOTHILL RANCH, CA 92610 BESI: 186807	Transporter's Phone #: 949-460-5200 Person to Contact: LARRY MOOTHART FAX#: 949-460-5210	CAR000183913 450647 Customer Account Number

Description of Soil	Moisture Content	Contaminated by:	Approx. Qty:	Description of Delivery	Gross Weight	Tare Weight	Net Weight
Sand ☐ Organic ☐ Clay ☐ Other ☐	0 - 10% ☐ 10 - 20% ☐ 20% - over ☐	Gas ☐ Diesel ☐ Other ☐	14 y	soil	62180	37300	24880
Sand ☐ Organic ☐ Clay ☐ Other ☐	0 - 10% ☐ 10 - 20% ☐ 20% - over ☐	Gas ☐ Diesel ☐ Other ☐					12.44

List any exception to items listed above: Bin # 45cr

Scale Ticket # 87998

Generator's and/or consultant's certification: I/We certify that the soil referenced herein is taken entirely from those soils descried in the Soil Data Sheet completed and certified by me/us for the Generation Site shown above and nothing has been added or done to such soil that would alter it in any way.

Print or Type Name: Generator ☒ Consultant ☐ — X M.V. Barranco

Signature and date: X M.V. BARRANCO — Month 12 Day 17 Year 10

Transporter

Transporter's certification: I/We acknowledge receipt of the soil referenced above and certify that such soil is being delivered in exactly the same condition as when received. I/We further certify that the soil is being directly transported from the Generation Site to the Designated Facility without off-loading, adding to, subtracting from or in any way delaying delivery to such site.

Print or Type Name: KEVIN DUNLOP

Signature and date: Kevin Dunlop — Month 12 Day 17 Year 10

Recycling Facility

Discrepancies:
12345LAK
624962

Recycling Facility certifies the receipt of the soil covered by this manifest except as noted above:

Print or Type Name: D. JEFFREY/J. PROVANSAL

Signature and date: 12-17-10

Please print or type.

TRANSPORTER COPY

Manifest

SOIL SAFE OF CA – TPST
Non-Hazardous Soils

↓ Manifest # ↓

Date of Shipment:	Responsible for Payment:	Transport Truck #:	Facility #:	Approval Number:	Load #
12/20/10		393/476	A07	36520	002

Generator and/or Consultant

Generator's Name and Billing Address: LAKELAND DEVELOPMENT COMPANY 12345 LAKELAND RD SANTA FE SPRINGS, CA 90670	Generator's Phone #: 562-944-6111 Person to Contact: FAX#:	Customer Account Number
Consultant's Name and Billing Address:	Consultant's Phone #: Person to Contact: FAX#:	Customer Account Number
Generation Site (Transport from): *(name & address)* CENCO OIL REFINERY 12345 LAKELAND RD. SANTA FE SPRINGS, CA 90670	Site Phone #: Person to Contact: FAX#:	
Designated Facility (Transport to): *(name & address)* SOIL SAFE 12328 HIBISCUS AVENUE ADELANTO, CA 92301	Facility Phone #: (800) 862-8001 Person to Contact: DELLENA JEFFREY FAX#: (760) 246-8004	
Transporter Name and Mailing Address: BELSHIRE 25971 TOWNE CENTRE DRIVE FOOTHILL RANCH, CA 92610 BESI: 186807	Transporter's Phone #: 949-460-5200 Person to Contact: LARRY MOOTHART FAX#: 949-460-5210	CAR000183913 450647 Customer Account Number

Description of Soil	Moisture Content	Contaminated by:	Approx. Qty:	Description of Delivery	Gross Weight	Tare Weight	Net Weight
Sand ☐ Organic ☐ Clay ☐ Other ☐	0 - 10% ☐ 10 - 20% ☐ 20% - over ☐	Gas ☐ Diesel ☐ Other ☐	10 yd		60440	37180	23260
Sand ☐ Organic ☐ Clay ☐ Other ☐	0 - 10% ☐ 10 - 20% ☐ 20% - over ☐	Gas ☐ Diesel ☐ Other ☐					11.63

List any exception to items listed above: Bin # 37ct

Scale Ticket # 88017

Generator's and/or consultant's certification: I/We certify that the soil referenced herein is taken entirely from those soils descried in the Soil Data Sheet completed and certified by me/us for the Generation Site shown above and nothing has been added or done to such soil that would alter it in any way.

Print or Type Name: Generator ☑ Consultant ☐ — x M. V. BARRANCO

Signature and date: x M. V. [signature] — Month 12 Day 20 Year 10

Transporter

Transporter's certification: I/We acknowledge receipt of the soil referenced above and certify that such soil is being delivered in exactly the same condition as when received. I/We further certify that the soil is being directly transported from the Generation Site to the Designated Facility without off-loading, adding to, subtracting from or in any way delaying delivery to such site.

Print or Type Name: Frank Salazar

Signature and date: [signature] — Month 12 Day 20 Year 10

Recycling Facility

Discrepancies:
12345LAK
624965

Recycling Facility certifies the receipt of the soil covered by this manifest except as noted above:

Print or Type Name: D. JEFFREY/J. PROVANSAL

Signature and date: [signature] 12-20-10

Please print or type.

TRANSPORTER COPY

Manifest

SOIL SAFE OF CA – TPST
Non-Hazardous Soils

↓ Manifest # ↓

Date of Shipment:	Responsible for Payment:	Transport Truck #:	Facility #:	Approval Number:	Load #
/ /		3941732	A07	36520	1003

Generator and/or Consultant

Generator's Name and Billing Address: LAKELAND DEVELOPMENT COMPANY 12345 LAKELAND RD SANTA FE SPRINGS, CA 90670	Generator's Phone #: 562-944-6111 Person to Contact: FAX#:	Customer Account Number
Consultant's Name and Billing Address:	Consultant's Phone #: Person to Contact: FAX#:	Customer Account Number
Generation Site (Transport from): *(name & address)* CENCO OIL REFINERY 12345 LAKELAND RD. SANTA FE SPRINGS, CA 90670	Site Phone #: Person to Contact: FAX#:	
Designated Facility (Transport to): *(name & address)* SOIL SAFE 12328 HIBISCUS AVENUE ADELANTO, CA 92301	Facility Phone #: (800) 862-8001 Person to Contact: DELLENA JEFFREY FAX#: (760) 246-8004	
Transporter Name and Mailing Address: BELSHIRE 25971 TOWNE CENTRE DRIVE FOOTHILL RANCH, CA 92610 BESI: 186807	Transporter's Phone #: 949-460-5200 Person to Contact: LARRY MOOTHART FAX#: 949-460-5210	CAR000183913 450647 Customer Account Number

Description of Soil	Moisture Content	Contaminated by:	Approx. Qty:	Description of Delivery	Gross Weight	Tare Weight	Net Weight
Sand ☐ Organic ☐ Clay ☐ Other ☐	0 - 10% ☐ 10 - 20% ☐ 20% - over ☐	Gas ☐ Diesel ☐ Other ☐	15 Y	soil	62660	37620	25040
Sand ☐ Organic ☐ Clay ☐ Other ☐	0 - 10% ☐ 10 - 20% ☐ 20% - over ☐	Gas ☐ Diesel ☐ Other ☐					12.50

List any exception to items listed above: BIN# 5 SCF Scale Ticket # 88424

Generator's and/or consultant's certification: I/We certify that the soil referenced herein is taken entirely from those soils descried in the Soil Data Sheet completed and certified by me/us for the Generation Site shown above and nothing has been added or done to such soil that would alter it in any way.

Print or Type Name: Generator ☒ Consultant ☐	Signature and date:	Month	Day	Year
Y M.V. BARRANCO	X [signature]	01	11	11

Transporter

Transporter's certification: I/We acknowledge receipt of the soil referenced above and certify that such soil is being delivered in exactly the same condition as when received. I/We further certify that the soil is being directly transported from the Generation Site to the Designated Facility without off-loading, adding to, subtracting from or in any way delaying delivery to such site.

Print or Type Name:	Signature and date:	Month	Day	Year
Kevin Dunlop	Kevin Dunlop	01	11	11

Recycling Facility

Discrepancies:
12345LAK
632392

Recycling Facility certifies the receipt of the soil covered by this manifest except as noted above:

Print or Type Name:	Signature and date:
D. JEFFREY/J. PROVANSAL	[signature] 1.11.11

Please print or type.

TRANSPORTER COPY

Manifest

SOIL SAFE OF CA – TPST
Non-Hazardous Soils

↓ Manifest # ↓

Date of Shipment:	Responsible for Payment:	Transport Truck #:	Facility #:	Approval Number:	Load #
/ /		394/732	A07	36520	004

Generator and/or Consultant

Generator's Name and Billing Address: LAKELAND DEVELOPMENT COMPANY 12345 LAKELAND RD SANTA FE SPRINGS, CA 90670	Generator's Phone #: 562-944-6111 Person to Contact: FAX#:	Customer Account Number
Consultant's Name and Billing Address:	Consultant's Phone #: Person to Contact: FAX#:	Customer Account Number
Generation Site (Transport from): *(name & address)* CENCO OIL REFINERY 12345 LAKELAND RD. SANTA FE SPRINGS, CA 90670	Site Phone #: Person to Contact: FAX#:	
Designated Facility (Transport to): *(name & address)* SOIL SAFE 12328 HIBISCUS AVENUE ADELANTO, CA 92301	Facility Phone #: (800) 862-8001 Person to Contact: DELLENA JEFFREY FAX#: (760) 246-8004	
Transporter Name and Mailing Address: BELSHIRE 25971 TOWNE CENTRE DRIVE FOOTHILL RANCH, CA 92610 BESI: 186807	Transporter's Phone #: 949-460-5200 Person to Contact: LARRY MOOTHART FAX#: 949-460-5210	CAR000183913 450647 Customer Account Number

Description of Soil	Moisture Content	Contaminated by:	Approx. Qty:	Description of Delivery	Gross Weight	Tare Weight	Net Weight
Sand ☐ Organic ☐ Clay ☐ Other ☐	0 - 10% ☐ 10 - 20% ☐ 20% - over ☐	Gas ☐ Diesel ☐ Other ☐	17 Y	soil	68500	37820	30680
Sand ☐ Organic ☐ Clay ☐ Other ☐	0 - 10% ☐ 10 - 20% ☐ 20% - over ☐	Gas ☐ Diesel ☐ Other ☐					1534

List any exception to items listed above: Bin # 48CT Scale Ticket # 88861

Generator's and/or consultant's certification: I/We certify that the soil referenced herein is taken entirely from those soils descried in the Soil Data Sheet completed and certified by me/us for the Generation Site shown above and nothing has been added or done to such soil that would alter it in any way.

Print or Type Name: Generator ☐ Consultant ☐ — X Edwin Sato Signature and date: X Edwin Sato Month 01 Day 20 Year 11

Transporter

Transporter's certification: I/We acknowledge receipt of the soil referenced above and certify that such soil is being delivered in exactly the same condition as when received. I/We further certify that the soil is being directly transported from the Generation Site to the Designated Facility without off-loading, adding to, subtracting from or in any way delaying delivery to such site.

Print or Type Name: Kevin Dunlop Signature and date: Kevin Dunlop Month 01 Day 20 Year 11

Recycling Facility

Discrepancies: 12345LAK 632402 Transport full Bin to Disposal

Recycling Facility certifies the receipt of the soil covered by this manifest except as noted above:

Print or Type Name: D. JEFFREY/J. PROVANSAL Signature and date: 1/24/11

Please print or type.

TRANSPORTER COPY

Manifest

SOIL SAFE OF CA – TPST
Non-Hazardous Soils

↓ Manifest # ↓

Date of Shipment:	Responsible for Payment:	Transport Truck #:	Facility #:	Approval Number:	Load #
/ /		3941732	A07	36520	005

Generator and/or Consultant

Generator's Name and Billing Address: LAKELAND DEVELOPMENT COMPANY 12345 LAKELAND RD SANTA FE SPRINGS, CA 90670	Generator's Phone #: 562-944-6111 Person to Contact: FAX#:	Customer Account Number
Consultant's Name and Billing Address:	Consultant's Phone #: Person to Contact: FAX#:	Customer Account Number
Generation Site (Transport from): *(name & address)* CENCO OIL REFINERY 12345 LAKELAND RD. SANTA FE SPRINGS, CA 90670	Site Phone #: Person to Contact: FAX#:	
Designated Facility (Transport to): *(name & address)* SOIL SAFE 12328 HIBISCUS AVENUE ADELANTO, CA 92301	Facility Phone #: (800) 862-8001 Person to Contact: DELLENA JEFFREY FAX#: (760) 246-8004	
Transporter Name and Mailing Address: BELSHIRE 25971 TOWNE CENTRE DRIVE FOOTHILL RANCH, CA 92610 BESI: 186807	Transporter's Phone #: 949-460-5200 Person to Contact: LARRY MOOTHART FAX#: 949-460-5210	CAR000183913 460847 Customer Account Number

Description of Soil	Moisture Content	Contaminated by:	Approx. Qty:	Description of Delivery	Gross Weight	Tare Weight	Net Weight
Sand ☐ Organic ☐ Clay ☐ Other ☐	0 - 10% ☐ 10 - 20% ☐ 20% - over ☐	Gas ☐ Diesel ☐ Other ☐	15Y	soil	61540	37240	24300
Sand ☐ Organic ☐ Clay ☐ Other ☐	0 - 10% ☐ 10 - 20% ☐ 20% - over ☐	Gas ☐ Diesel ☐ Other ☐					12.15

List any exception to items listed above: Bin # 38 CF — Scale Ticket # 89139

Generator's and/or consultant's certification: I/We certify that the soil referenced herein is taken entirely from those soils descried in the Soil Data Sheet completed and certified by me/us for the Generation Site shown above and nothing has been added or done to such soil that would alter it in any way.

Print or Type Name: Generator ☐ Consultant ☐ — (X) Denice Guenther

Signature and date: (X) Denice Guenther — Month 01 Day 31 Year 11

Transporter

Transporter's certification: I/We acknowledge receipt of the soil referenced above and certify that such soil is being delivered in exactly the same condition as when received. I/We further certify that the soil is being directly transported from the Generation Site to the Designated Facility without off-loading, adding to, subtracting from or in any way delaying delivery to such site.

Print or Type Name: Kevin Dunlap

Signature and date: Month 01 Day 31 Year 11

Recycling Facility

Discrepancies: 12345LAK 635666D

Recycling Facility certifies the receipt of the soil covered by this manifest except as noted above:

Print or Type Name: D. JEFFREY/J. PROVANSAL

Signature and date: 1-31-11

Please print or type.

TRANSPORTER COPY

Manifest

SOIL SAFE OF CA – TPST
Non-Hazardous Soils

↓ Manifest # ↓

Date of Shipment:	Responsible for Payment:	Transport Truck #:	Facility #:	Approval Number:	Load #
/ /		111/733	A07	36520	006

Generator and/or Consultant

Generator's Name and Billing Address:
LAKELAND DEVELOPMENT COMPANY
12345 LAKELAND RD
SANTA FE SPRINGS, CA 90670

Generator's Phone #: 562-944-6111
Person to Contact:
FAX#:
Customer Account Number

Consultant's Name and Billing Address:

Consultant's Phone #:
Person to Contact:
FAX#:
Customer Account Number

Generation Site (Transport from): *(name & address)*
CENCO OIL REFINERY
12345 LAKELAND RD.
SANTA FE SPRINGS, CA 90670

Site Phone #:
Person to Contact:
FAX#:

Designated Facility (Transport to): *(name & address)*
SOIL SAFE
12328 HIBISCUS AVENUE
ADELANTO, CA 92301

Facility Phone #: (800) 862-8001
Person to Contact: DELLENA JEFFREY
FAX#: (760) 246-6004

Transporter Name and Mailing Address:
BELSHIRE
25971 TOWNE CENTRE DRIVE
FOOTHILL RANCH, CA 92610
BESI: 186807

Transporter's Phone #: 949-460-5200
CAR000183913
Person to Contact: LARRY MOOTHART
460647
FAX#: 949-460-5210
Customer Account Number

Description of Soil	Moisture Content	Contaminated by:	Approx. Qty:	Description of Delivery	Gross Weight	Tare Weight	Net Weight
Sand ☐ Organic ☐ Clay ☐ Other ☐	0-10% ☐ 10-20% ☐ 20%-over ☐	Gas ☐ Diesel ☐ Other ☐	10 y	Soil	53440	37180	16260
Sand ☐ Organic ☐ Clay ☐ Other ☐	0-10% ☐ 10-20% ☐ 20%-over ☐	Gas ☐ Diesel ☐ Other ☐					8.13

List any exception to items listed above: Bin # 7207
Scale Ticket # 89168

Generator's and/or consultant's certification: I/We certify that the soil referenced herein is taken entirely from those soils descried in the Soil Data Sheet completed and certified by me/us for the Generation Site shown above and nothing has been added or done to such soil that would alter it in any way.

Print or Type Name: Generator ☐ Consultant ☐
Denise Guenther
Signature and date: Denise Guenther
Month 1 Day 31 Year 11

Transporter

Transporter's certification: I/We acknowledge receipt of the soil referenced above and certify that such soil is being delivered in exactly the same condition as when received. I/We further certify that the soil is being directly transported from the Generation Site to the Designated Facility without off-loading, adding to, subtracting from or in any way delaying delivery to such site.

Print or Type Name: Lukasz Piatek
Signature and date: Lukasz Piatek
Month 1 Day 31 Year 11

Recycling Facility

Discrepancies:
12345LAK
0356666

Recycling Facility certifies the receipt of the soil covered by this manifest except as noted above:

Print or Type Name: D. JEFFREY/J. PROVANSAL
Signature and date: 2-1-11

Please print or type.

TRANSPORTER COPY

Appendix G

GROUNDWATER SAMPLING LOG

PROJECT NAME:	CENCO
PROJECT NO.:	1003-001-300
DATE:	2-3-2011

WELL NO. EW-1 Walker

SAMPLED BY: Frane Sosic

WELL NOTES: May have product Yes, it does

WELL CONDITION: OK

WEATHER CONDITIONS: Clear/sunny/cool/breezey

PURGING AND SAMPLING EQUIPMENT:
YSI 556
Interface probe (200')

WELL INFORMATION		
TOP OF CASING ELEV.		(ft.)
WELL DIAMETER	4"	(inches)
DEPTH OF WELL	113.00	(ft.)
DEPTH TO WATER	105.98	(ft.)
HEIGHT OF WATER COLUMN	7.02	(ft.)
CASING VOLUME*	Hgt. ~~x 0.163~~ 0.66 Gal./Ft. = 4.6332	(gal)
PURGE VOLUME	x 3 = 13.8996	(gal)
PRODUCT THICKNESS		(ft.)

PURGE DATA

Time:	Purge Volume (Gal.)	Flow Rate (Gal./Min.)	pH	Sp.Cond. mS/cm	Turbidity NTUs	DO mg/L	Temperature (F / C)	TDS	ORP mV	Color	Odor
											Strong
1148	5		8.52	1.761	/	3.84	16.88	/	-270	Cloudy	HC-diesel/Sulphur odor
1155	10		8.34	1.770	/	3.41	16.12	/	-277	Clear	-"-
1205	15		8.13	1.805	/	3.69	18.29	/	-282	-"-	-"-

NOTES: Air-assist NOT used. Stinger raised ~8' ags then gently lowered so as to skim FP off the top of GW

Sample No.	Sample Time Time	Packing	Analyses	Container	Quantity	Preserv-ative		FP		DTW
1	1330	ice	8260B - VOCs + Oxys	VOAs	3	HCL	FPPH	105.65	Before purging	106.04
1	1330	ice	8015M - TPH-g	VOAs	3	HCL (1415)	1 hour	/		105.64
2	1345					(1530)	2 hrs	/		105.65
2	1345					(1730)	4 hrs	/		105.66
						2-4-11 (1430)	24 hrs	/		105.59
							72+hrs (H 2/4 11:00)	105.68		105.70

ADDITIONAL INFORMATION:

① LL_EW1_020311_01 @ 13:30

DUP ② LL_EW1_020311_02 @ 13:45

TOC = Top of well casing

*Casing Volume = r^2h(ft) x 7.48 gal/ft.^{3} 4" well = 0.66 Gal./Foot 2" well = 0.163 Gal./Foot

Additional Groundwater Quality Parameters

Page 2 of 2

PROJECT NAME: CENCO

PROJECT NO.: 1003-001-300

DATE: 2-3-2011

WELL NO. EW-1

SAMPLED BY: Frane Sosic

Time:	Purge Volume (Gal.)	Flow Rate (Gal./Min.)	pH	Sp.Cond. (s/cm)	Turbidity NTUs	DO mg/L	Temperature (F/C)	TDS	ORP mV	Color	Odor
1212	20		8.09	1.838		3.10	17.07		-297	Brown(FP)	Same as above
* 1223	25		8.31	1.786		9.61	18.14		-324	Lt. gray	-//-
1229	30		8.28	1.830		3.58	19.47		-341	-//-	-//-
1247	35		7.75	1.940		9.07	19.28		-299	Cloudy	-//-
1256	40		7.92	1.868		7.94	19.10		-269	-//-	-//-
1305	45		7.97	1.863		5.40	18.16		-254	Clear	-//-
1310	50		7.90	1.866		6.61	18.77		-258	Clear	-//-

* Stinger lowered to bottom + air-assist line connected -> will try to purge EW-1 dry
↳ raised again ~ 7' ags @ approx. 30-35 gal into the purge.

GROUNDWATER SAMPLING LOG

PROJECT NAME:	CENCO	WELL NO.	MW-101 Site
PROJECT NO.:	1003-001-300	SAMPLED BY:	Frane Sosic
DATE:	1-28-2011		

WELL NOTES: May Be Dry

WELL CONDITION:

WEATHER CONDITIONS:

PURGING AND SAMPLING EQUIPMENT:
YSI 556
Interface probe (200')

WELL INFORMATION		
TOP OF CASING ELEV.		(ft.)
WELL DIAMETER		(inches)
DEPTH OF WELL		(ft.)
DEPTH TO WATER	DRY	(ft.)
HEIGHT OF WATER COLUMN		(ft.)
CASING VOLUME*	Hgt. x 0.163 Gal./Ft. =	(gal)
PURGE VOLUME	x 3 =	(gal)
PRODUCT THICKNESS		(ft.)

PURGE DATA

Time:	Purge Volume (Gal.)	Flow Rate (Gal./Min.)	pH	Sp.Cond. (s/cm)	Turbidity NTUs	DO mg/L	Temperature (F / C)	TDS	ORP	Color	Odor

Sample No.	Sample Time Time	Packing	Analyses	Container	Quantity	Preserv-ative	NOTES:
		ice	8260B - VOCs + Oxys	VOAs	3	HCL	DRY - NOT SAMPLED
		ice	8015M - TPH-g	VOAs	3	HCL	

ADDITIONAL INFORMATION:

TOC = Top of well casing

*Casing Volume = r^2h(ft) x 7.48 gal/ft.^{3} 4" well = 0.66 Gal./Foot 2" well = 0.163 Gal./Foot

GROUNDWATER SAMPLING LOG

PROJECT NAME:	CENCO	WELL NO.	MW-103 Site
PROJECT NO.:	1003-001-300	SAMPLED BY:	Frane Sosic
DATE:	1-28-2011		

WELL NOTES: May Be Dry

WELL CONDITION:

WEATHER CONDITIONS:

PURGING AND SAMPLING EQUIPMENT:
YSI 556
Interface probe (200')

WELL INFORMATION		
TOP OF CASING ELEV.		(ft.)
WELL DIAMETER		(inches)
DEPTH OF WELL		(ft.)
DEPTH TO WATER	DRY	(ft.)
HEIGHT OF WATER COLUMN		(ft.)
CASING VOLUME*	Hgt. x 0.163 Gal./Ft. =	(gal)
PURGE VOLUME	x 3 =	(gal)
PRODUCT THICKNESS		(ft.)

PURGE DATA

Time:	Purge Volume (Gal.)	Flow Rate (Gal./Min.)	pH	Sp.Cond. (s/cm)	Turbidity NTUs	DO mg/L	Temperature (F / C)	TDS	ORP	Color	Odor

Sample No.	Sample Time Time	Packing	Analyses	Container	Quantity	Preserv-ative	NOTES:
		ice	8260B - VOCs + Oxys	VOAs	3	HCL	DRY – NOT SAMPLED
		ice	8015M - TPH-g	VOAs	3	HCL	

ADDITIONAL INFORMATION:

TOC = Top of well casing

*Casing Volume = r^2h(ft) x 7.48 gal/ft.^{3} 4" well = 0.66 Gal./Foot 2" well = 0.163 Gal./Foot

GROUNDWATER SAMPLING LOG

PROJECT NAME: CENCO
PROJECT NO.: 1003-001-300
DATE: 2·1·2011 (purged) / 2·2·2011 (sampled)

WELL NO. MW-104A Site
SAMPLED BY: Frane Sosic

WELL INFORMATION		
TOP OF CASING ELEV.		(ft.)
WELL DIAMETER	4"	(inches)
DEPTH OF WELL	100.08	(ft.)
DEPTH TO WATER	93.70	(ft.)
HEIGHT OF WATER COLUMN	6.38	(ft.)
CASING VOLUME*	Hgt. x ~~0.163~~ 0.66 Gal./Ft. = 4.2108	(gal)
PURGE VOLUME	x 3 = 12.6324	(gal)
PRODUCT THICKNESS		(ft.)

WELL CONDITION:
OK

WEATHER CONDITIONS:
Clear/sunny (~67°F)/breezey

PURGING AND SAMPLING EQUIPMENT:
YSI 556
Interface probe (200')

PURGE DATA

Time:	Purge Volume (Gal.)	Flow Rate (Gal./Min.)	pH	Sp.Cond. mS/cm	Turbidity NTUs	DO mg/L	Temperature (F/C)	TDS	ORP mV	Color	Odor
1500	4		8.46	2.644	/	3.05	22.07	/	136.4	Clear	Slight
—	* 8		—	—		—	—		—	—	—
—	12		—	—		—	—		—	—	—

↳ MW-104A purged dry ~6 gallons (similar to 4Q2010) Will allow to re-charge over night before sampling

Sample No.	Sample Time Time	Packing	Analyses	Container	Quantity	Preserv-ative	NOTES: FEB. 2, 2011
1	800	ice	8260B - VOCs + Oxys	VOAs	3	HCL	LL_MW104A_020211_01 @ 800
1	-"-	ice	8015M - TPH-g	VOAs	3	HCL	
2	820	-"-	8260B	VOAs	3	HCl	DUPLICATE LL_MW104A_020211_02 @ 820
2	-"-	-"-	8015M	-"-	3	HCl	

ADDITIONAL INFORMATION:

TOC = Top of well casing

*Casing Volume = r^2h(ft) x 7.48 gal/ft.^{3}

4" well = 0.66 Gal./Foot

2" well = 0.163 Gal./Foot

GROUNDWATER SAMPLING LOG

PROJECT NAME:	CENCO	WELL NO.	MW-105 Site
PROJECT NO.:	1003-001-300	SAMPLED BY:	Frane Sosic
DATE:	1-28-2011		

WELL INFORMATION		
TOP OF CASING ELEV.		(ft.)
WELL DIAMETER		(inches)
DEPTH OF WELL		(ft.)
DEPTH TO WATER	DRY	(ft.)
HEIGHT OF WATER COLUMN		(ft.)
CASING VOLUME*	Hgt. x 0.163 Gal./Ft. =	(gal)
PURGE VOLUME	x 3 =	(gal)
PRODUCT THICKNESS		(ft.)

WELL CONDITION:

WEATHER CONDITIONS:

PURGING AND SAMPLING EQUIPMENT:
YSI 556
Interface probe (200')

PURGE DATA

Time:	Purge Volume (Gal.)	Flow Rate (Gal./Min.)	pH	Sp.Cond. (s/cm)	Turbidity NTUs	DO mg/L	Temperature (F / C)	TDS	ORP	Color	Odor

Sample No.	Sample Time Time	Packing	Analyses	Container	Quantity	Preserv-ative	NOTES:
1		ice	8260B - VOCs + Oxys	VOAs	3	HCL	DRY- NOT SAMPLED
1		ice	8015M - TPH-g	VOAs	3	HCL	
2		ice	8260B - VOCs & Oxys	VOAs	3	HCL	Duplicate
2		ice	8015M - TPH-g	VOAs	3	HCL	Duplicate

ADDITIONAL INFORMATION:

TOC = Top of well casing

*Casing Volume = r^2h(ft) x 7.48 gal/ft.^{3} 4" well = 0.66 Gal./Foot 2" well = 0.163 Gal./Foot

GROUNDWATER SAMPLING LOG

PROJECT NAME:	CENCO	WELL NO.	MW-106A Bloomfield
PROJECT NO.:	1003-001-300	SAMPLED BY:	Frane Sosic
DATE:	2-3-2011		

WELL NOTES:

WELL CONDITION:
OK- no problems

WEATHER CONDITIONS:
Clear/sunny (~65°F)/breezey

PURGING AND SAMPLING EQUIPMENT:
YSI 556
Interface probe (200')

WELL INFORMATION		
TOP OF CASING ELEV.		(ft.)
WELL DIAMETER	4"	(inches)
DEPTH OF WELL	110.00	(ft.)
DEPTH TO WATER	107.15	(ft.)
HEIGHT OF WATER COLUMN	2.85	(ft.)
CASING VOLUME*	Hgt. x ~~0.163~~ 0.66 Gal./Ft. = 1.881	(gal)
PURGE VOLUME	x 3 = 5.643	(gal)
PRODUCT THICKNESS		(ft.)

PURGE DATA

Time:	Purge Volume (Gal.)	Flow Rate (Gal./Min.)	pH	Sp.Cond. µ(S/cm)	Turbidity NTUs	DO mg/L	Temperature (F/C)	TDS	ORP mV	Color	Odor
~9:46	* 2		—	—	/	—	—	/	—	Murky yellowish	—
—	4		—	—		—	—		—	—	—
—	6		—	—		—	—		—	—	—

Well went dry ~ 1-1.5 gallons; will allow recharge until end of the day prior to sampling

Sample No.	Sample Time Time	Packing	Analyses	Container	Quantity	Preserv-ative
1	1500	ice	8260B - VOCs + Oxys	VOAs	3	HCL
1	1500	ice	8015M - TPH-g	VOAs	3	HCL

NOTES:
Air-assist line connected to aide in purging
106A going dry ≤1.5-gallons have been purged

ADDITIONAL INFORMATION:

TOC = Top of well casing

*Casing Volume = r^2h(ft) x 7.48 gal/ft.^{3}

4" well = 0.66 Gal./Foot 2" well = 0.163 Gal./Foot

GROUNDWATER SAMPLING LOG

PROJECT NAME:	CENCO	WELL NO.	MW-107A Bloomfield
PROJECT NO.:	1003-001-300	SAMPLED BY:	Frane Sosic
DATE:	2-3-2011		

WELL NOTES:

WELL CONDITION:
OK-good well condition

WEATHER CONDITIONS:
Clear/sunny (~66°F)/breezy

PURGING AND SAMPLING EQUIPMENT:
YSI 556
Interface probe (200')

WELL INFORMATION		
TOP OF CASING ELEV.		(ft.)
WELL DIAMETER	4"	(inches)
DEPTH OF WELL	109.49	(ft.)
DEPTH TO WATER	104.32	(ft.)
HEIGHT OF WATER COLUMN	5.17	(ft.)
CASING VOLUME*	Hgt. x ~~0.163~~ 0.66 Gal./Ft. = 3.4122	(gal)
PURGE VOLUME	x 3 = 10.2366	(gal)
PRODUCT THICKNESS		(ft.)

PURGE DATA

Time:	Purge Volume (Gal.)	Flow Rate (Gal./Min.)	pH	Sp.Cond. µ(S)/cm)	Turbidity NTUs	DO mg/L	Temperature (F/C)	TDS	ORP µV	Color	Odor Strong!
1032	3		8.47	2.190	/	1.53	20.40	/	-280	Black	HC-decay odor
1034	6		8.51	2.248		3.00	20.32		-296	Greenish black	-11-
1036	10		8.49	2.242		3.42	20.51		-338	Cloudy gray	-11-

Sample No.	Sample Time Time	Packing	Analyses	Container	Quantity	Preserv-ative	NOTES: Air-assist line connected
1	1100	ice	8260B - VOCs + Oxys	VOAs	3	HCL	LL_MW107A_020311
1	1100	ice	8015M - TPH-g	VOAs	3	HCL	
~~2~~		ice	~~8260B - VOCs + Oxys~~	~~VOAs~~	~~3~~	~~HCL~~	~~Duplicate~~
~~2~~		ice	~~8015M - TPH-g~~	~~VOAs~~	~~3~~	~~HCL~~	~~Duplicate~~ NO DUP

ADDITIONAL INFORMATION:

TOC = Top of well casing

*Casing Volume = r^2h(ft) x 7.48 gal/ft.^{3}

4" well = 0.66 Gal./Foot 2" well = 0.163 Gal./Foot

GROUNDWATER SAMPLING LOG

PROJECT NAME: CENCD
PROJECT NO.: 1003-001-300
DATE: 1-28-2011

WELL NO. MW-201 Site 2
SAMPLED BY: Frane Sosic

WELL NOTES:
WELL CONDITION:

WEATHER CONDITIONS:

PURGING AND SAMPLING EQUIPMENT:
YSI 556
Interface probe (200')

WELL INFORMATION		
TOP OF CASING ELEV.		(ft.)
WELL DIAMETER		(inches)
DEPTH OF WELL		(ft.)
DEPTH TO WATER	DRY	(ft.)
HEIGHT OF WATER COLUMN		(ft.)
CASING VOLUME*	Hgt. x 0.163 Gal./Ft. =	(gal)
PURGE VOLUME	x 3 =	(gal)
PRODUCT THICKNESS		(ft.)

PURGE DATA

Time:	Purge Volume (Gal.)	Flow Rate (Gal./Min.)	pH	Sp.Cond. (s/cm)	Turbidity NTUs	DO mg/L	Temperature (F / C)	TDS	ORP	Color	Odor

Sample No.	Sample Time Time	Packing	Analyses	Container	Quantity	Preserv-ative	NOTES:
		ice	8260B - VOCs + Oxys	VOAs	3	HCL	DRY- NOT SAMPLED
		ice	8015M - TPH-g	VOAs	3	HCL	

ADDITIONAL INFORMATION:

TOC = Top of well casing

*Casing Volume = r^2h(ft) x 7.48 gal/ft.^{3} 4" well = 0.66 Gal./Foot 2" well = 0.163 Gal./Foot

GROUNDWATER SAMPLING LOG

PROJECT NAME:	CENCO	WELL NO.	MW-202 Site
PROJECT NO.:	1003-001-300	SAMPLED BY:	Frane Sosic
DATE:	1-28-2011		

WELL NOTES: May Be Dry

WELL CONDITION:

WEATHER CONDITIONS:

PURGING AND SAMPLING EQUIPMENT:
YSI 556
Interface probe (200')

WELL INFORMATION		
TOP OF CASING ELEV.		(ft.)
WELL DIAMETER		(inches)
DEPTH OF WELL		(ft.)
DEPTH TO WATER	DRY	(ft.)
HEIGHT OF WATER COLUMN		(ft.)
CASING VOLUME*	Hgt. x 0.163 Gal./Ft. =	(gal)
PURGE VOLUME	x 3 =	(gal)
PRODUCT THICKNESS		(ft.)

PURGE DATA

Time:	Purge Volume (Gal.)	Flow Rate (Gal./Min.)	pH	Sp.Cond. (s/cm)	Turbidity NTUs	DO mg/L	Temperature (F / C)	TDS	ORP	Color	Odor

Sample No.	Sample Time Time	Packing	Analyses	Container	Quantity	Preserv-ative	NOTES:
		ice	8260B - VOCs + Oxys	VOAs	3	HCL	DRY - NOT SAMPLED
		ice	8015M - TPH-g	VOAs	3	HCL	

ADDITIONAL INFORMATION:

TOC = Top of well casing

*Casing Volume = $r^2h(ft) \times 7.48$ gal/ft.^{3}

4" well = 0.66 Gal./Foot

2" well = 0.163 Gal./Foot

GROUNDWATER SAMPLING LOG

PROJECT NAME: CENCO
PROJECT NO.: 1003-001-300
DATE: 1-28-2011

WELL NO. MW-203 Bloomfield
SAMPLED BY: Frane Sosic

WELL NOTES:
WELL CONDITION:

WEATHER CONDITIONS:

PURGING AND SAMPLING EQUIPMENT:
YSI 556
Interface probe (200')

WELL INFORMATION		
TOP OF CASING ELEV.		(ft.)
WELL DIAMETER		(inches)
DEPTH OF WELL		(ft.)
DEPTH TO WATER	DRY	(ft.)
HEIGHT OF WATER COLUMN		(ft.)
CASING VOLUME*	Hgt. x 0.163 Gal./Ft. =	(gal)
PURGE VOLUME	x 3 =	(gal)
PRODUCT THICKNESS		(ft.)

PURGE DATA

Time:	Purge Volume (Gal.)	Flow Rate (Gal./Min.)	pH	Sp.Cond. (s/cm)	Turbidity NTUs	DO mg/L	Temperature (F / C)	TDS	ORP	Color	Odor

Sample No.	Sample Time Time	Packing	Analyses	Container	Quantity	Preserv-ative	NOTES:
		ice	8260B - VOCs + Oxys	VOAs	3	HCL	DRY - NOT SAMPLED
		ice	8015M - TPH-g	VOAs	3	HCL	

ADDITIONAL INFORMATION:

TOC = Top of well casing

*Casing Volume = r^2h(ft) x 7.48 gal/ft.^{3} 4" well = 0.66 Gal./Foot 2" well = 0.163 Gal./Foot

GROUNDWATER SAMPLING LOG

PROJECT NAME:	CENCO	WELL NO.	MW-204 Site
PROJECT NO.:	1003-001-300	SAMPLED BY:	Frane Sosic
DATE:	1-28-2011		

WELL INFORMATION		
TOP OF CASING ELEV.		(ft.)
WELL DIAMETER		(inches)
DEPTH OF WELL		(ft.)
DEPTH TO WATER	DRY	(ft.)
HEIGHT OF WATER COLUMN		(ft.)
CASING VOLUME*	Hgt. x 0.163 Gal./Ft. =	(gal)
PURGE VOLUME	x 3 =	(gal)
PRODUCT THICKNESS		(ft.)

WELL CONDITION:

WEATHER CONDITIONS:

PURGING AND SAMPLING EQUIPMENT:
YSI 556
Interface probe (200')

PURGE DATA

Time:	Purge Volume (Gal.)	Flow Rate (Gal./Min.)	pH	Sp.Cond. (s/cm)	Turbidity NTUs	DO mg/L	Temperature (F / C)	TDS	ORP	Color	Odor

Sample No.	Sample Time Time	Packing	Analyses	Container	Quantity	Preserv-ative	NOTES:
		ice	8260B - VOCs + Oxys	VOAs	3	HCL	DRY- NOT SAMPLED
		ice	8015M - TPH-g	VOAs	3	HCL	

ADDITIONAL INFORMATION:

TOC = Top of well casing

*Casing Volume = r^2h(ft) x 7.48 gal/ft.^{3} 4" well = 0.66 Gal./Foot 2" well = 0.163 Gal./Foot

GROUNDWATER SAMPLING LOG

PROJECT NAME:	CENCO	WELL NO.	MW-205 Site
PROJECT NO.:	1003-001-300	SAMPLED BY:	Frane Sosic
DATE:	1-28-2011		

WELL NOTES: May Be Dry

WELL CONDITION:

WEATHER CONDITIONS:

PURGING AND SAMPLING EQUIPMENT:
YSI 556
Interface probe (200')

WELL INFORMATION		
TOP OF CASING ELEV.		(ft.)
WELL DIAMETER		(inches)
DEPTH OF WELL		(ft.)
DEPTH TO WATER	DRY	(ft.)
HEIGHT OF WATER COLUMN		(ft.)
CASING VOLUME*	Hgt. x 0.163 Gal./Ft. =	(gal)
PURGE VOLUME	x 3 =	(gal)
PRODUCT THICKNESS		(ft.)

PURGE DATA

Time:	Purge Volume (Gal.)	Flow Rate (Gal./Min.)	pH	Sp.Cond. (s/cm)	Turbidity NTUs	DO mg/L	Temperature (F / C)	TDS	ORP	Color	Odor

Sample No.	Sample Time Time	Packing	Analyses	Container	Quantity	Preserv-ative	NOTES:
		ice	8260B - VOCs + Oxys	VOAs	3	HCL	DRY - NOT SAMPLED
		ice	8015M - TPH-g	VOAs	3	HCL	

ADDITIONAL INFORMATION:

TOC = Top of well casing

*Casing Volume = r^2h(ft) x 7.48 gal/ft.^{3}

4" well = 0.66 Gal./Foot

2" well = 0.163 Gal./Foot

GROUNDWATER SAMPLING LOG

PROJECT NAME: CENCO
PROJECT NO.: 1003-001-300
DATE: 1-28-2011

WELL NO. MW-501A Lakeland
SAMPLED BY: Frane Sosic

WELL NOTES: May be Dry
WELL CONDITION:

WEATHER CONDITIONS:

PURGING AND SAMPLING EQUIPMENT:
YSI 556
Interface probe (200')

WELL INFORMATION		
TOP OF CASING ELEV.		(ft.)
WELL DIAMETER		(inches)
DEPTH OF WELL		(ft.)
DEPTH TO WATER	DRY	(ft.)
HEIGHT OF WATER COLUMN		(ft.)
CASING VOLUME*	Hgt. x 0.163 Gal./Ft. =	(gal)
PURGE VOLUME	x 3 =	(gal)
PRODUCT THICKNESS		(ft.)

PURGE DATA

Time:	Purge Volume (Gal.)	Flow Rate (Gal./Min.)	pH	Sp.Cond. (s/cm)	Turbidity NTUs	DO mg/L	Temperature (F / C)	TDS	ORP	Color	Odor

Sample No.	Sample Time Time	Packing	Analyses	Container	Quantity	Preserv-ative	NOTES:
		ice	8260B - VOCs + Oxys	VOAs	3	HCL	DRY - NOT SAMPLED
		ice	8015M - TPH-g	VOAs	3	HCL	

ADDITIONAL INFORMATION:

TOC = Top of well casing

*Casing Volume = r^2h(ft) x 7.48 gal/ft.^{3}

4" well = 0.66 Gal./Foot

2" well = 0.163 Gal./Foot

GROUNDWATER SAMPLING LOG

PROJECT NAME: CENCO
PROJECT NO.: 1003-001-300
DATE: 1-28-2011

WELL NO. MW-502 Lakeland
SAMPLED BY: Frane Sosic

WELL NOTES: May have sheen/product
WELL CONDITION:

WEATHER CONDITIONS:

PURGING AND SAMPLING EQUIPMENT:
YSI 556
Interface probe (200')

WELL INFORMATION		
TOP OF CASING ELEV.		(ft.)
WELL DIAMETER		(inches)
DEPTH OF WELL		(ft.)
DEPTH TO WATER	DRY	(ft.)
HEIGHT OF WATER COLUMN		(ft.)
CASING VOLUME*	Hgt. x 0.163 Gal./Ft. =	(gal)
PURGE VOLUME	x 3 =	(gal)
PRODUCT THICKNESS		(ft.)

PURGE DATA

Time:	Purge Volume (Gal.)	Flow Rate (Gal./Min.)	pH	Sp.Cond. (s/cm)	Turbidity NTUs	DO mg/L	Temperature (F / C)	TDS	ORP	Color	Odor

Sample No.	Sample Time Time	Packing	Analyses	Container	Quantity	Preserv-ative	NOTES:
		ice	8260B - VOCs + Oxys	VOAs	3	HCL	DRY - NOT SAMPLED
		ice	8015M - TPH-g	VOAs	3	HCL	

ADDITIONAL INFORMATION:

TOC = Top of well casing

*Casing Volume = r^2h(ft) x 7.48 gal/ft.^{3} 4" well = 0.66 Gal./Foot 2" well = 0.163 Gal./Foot

GROUNDWATER SAMPLING LOG

PROJECT NAME: CENCO
PROJECT NO.: 1003-001-300
DATE: 2-4-2011

WELL NO. MW-503B Lakeland
SAMPLED BY: Frane Sosic

WELL NOTES: Product in purge water!
WELL CONDITION: Not good

WEATHER CONDITIONS: Scattered clouds (~50°F)

PURGING AND SAMPLING EQUIPMENT:
YSI 556
Interface probe (200')

WELL INFORMATION		
TOP OF CASING ELEV.		(ft.)
WELL DIAMETER	4"	(inches)
DEPTH OF WELL	108.57	(ft.)
DEPTH TO WATER	107.63	(ft.)
HEIGHT OF WATER COLUMN	1.04	(ft.)
CASING VOLUME*	Hgt. x ~~0.163~~ 0.66 Gal./Ft. = 0.6864	(gal)
PURGE VOLUME	x 3 = 2.0592	(gal)
PRODUCT THICKNESS	0.63' (FPPH) SHEEN	(ft.)

PURGE DATA

Time:	Purge Volume (Gal.)	Flow Rate (Gal./Min.)	pH	Sp.Cond. mS/cm	Turbidity NTUs	DO mg/L	Temperature (F/C)	TDS	ORP mV	Color	Odor
1103	1		8.12	1.623	/	20.17	16.78	/	-22	Dark murky gray	HC/HC-decay/Sulphur
1106	2		8.09	1.818	/	25.85	17.10	/	-36	Product!	Very strong odor!
1108	3		7.97	1.896	/	36.22	17.13	/	-42	Product!	-"-
1132	6		7.96	1.942		21.60	18.56		-46	Dark brown on top of greenish gray GW	

Sample No.	Sample Time Time	Packing	Analyses	Container	Quantity	Preservative
1	1230	ice	8260B - VOCs + Oxys	VOAs	3	HCL
TIME	1230	ice	8015M - TPH-g	VOAs	3	HCL

NOTES: Air-assist line connected
LL_MW503B_020411 @ 12:30

12:00	* 10 gal.		7.95	1.911	/	26.39	18.46	/	-48.3	Cloudy gray	Strong odor!

FPPH	DTW	Hrs. post purge
108.02	108.12	1
107.87	108.00	2
107.69	107.86	4
106.78	107.10	24
106.91	107.41	72+ hrs (H 2/9 12:00)

ADDITIONAL INFORMATION:
TOC = Top of well casing
*Casing Volume = r^2h(ft) x 7.48 gal/ft.^{3}

* Went dry @ 10 gal

4" well = 0.66 Gal./Foot
2" well = 0.163 Gal./Foot

GROUNDWATER SAMPLING LOG

PROJECT NAME: CENCO
PROJECT NO.: 1003-001-300
DATE: 1-28-2011

WELL NO. MW-504 Site 2
SAMPLED BY: Frane Sosic

WELL NOTES: May be dry/may have product
WELL CONDITION:

WEATHER CONDITIONS:

PURGING AND SAMPLING EQUIPMENT:
YSI 556
Interface probe (200')

WELL INFORMATION		
TOP OF CASING ELEV.		(ft.)
WELL DIAMETER		(inches)
DEPTH OF WELL		(ft.)
DEPTH TO WATER	DRY	(ft.)
HEIGHT OF WATER COLUMN		(ft.)
CASING VOLUME*	Hgt. x 0.163 Gal./Ft. =	(gal)
PURGE VOLUME	x 3 =	(gal)
PRODUCT THICKNESS		(ft.)

PURGE DATA

Time:	Purge Volume (Gal.)	Flow Rate (Gal./Min.)	pH	Sp.Cond. (s/cm)	Turbidity NTUs	DO mg/L	Temperature (F / C)	TDS	ORP	Color	Odor

Sample No.	Sample Time Time	Packing	Analyses	Container	Quantity	Preserv-ative	NOTES:
		ice	8260B - VOCs + Oxys	VOAs	3	HCL	DRY - NOT SAMPLED
		ice	8015M - TPH-g	VOAs	3	HCL	

ADDITIONAL INFORMATION:

TOC = Top of well casing

*Casing Volume = r^2h(ft) x 7.48 gal/ft.^{3} 4" well = 0.66 Gal./Foot 2" well = 0.163 Gal./Foot

GROUNDWATER SAMPLING LOG

PROJECT NAME: CENCO
PROJECT NO.: 1003-001-300
DATE: 1-28-2011

WELL NO. MW-600A Hospital
SAMPLED BY: Frane Sosic

Well Notes: May be dry, may have product
WELL CONDITION:

WEATHER CONDITIONS:

PURGING AND SAMPLING EQUIPMENT:
YSI 556
Interface probe (200')

WELL INFORMATION		
TOP OF CASING ELEV.		(ft.)
WELL DIAMETER		(inches)
DEPTH OF WELL		(ft.)
DEPTH TO WATER	DRY	(ft.)
HEIGHT OF WATER COLUMN		(ft.)
CASING VOLUME*	Hgt. x 0.163 Gal./Ft. =	(gal)
PURGE VOLUME	x 3 =	(gal)
PRODUCT THICKNESS		(ft.)

PURGE DATA

Time:	Purge Volume (Gal.)	Flow Rate (Gal./Min.)	pH	Sp.Cond. (s/cm)	Turbidity NTUs	DO mg/L	Temperature (F / C)	TDS	ORP	Color	Odor

Sample No.	Sample Time Time	Packing	Analyses	Container	Quantity	Preserv-ative	NOTES:
		ice	8260B - VOCs + Oxys	VOAs	3	HCL	DRY – NOT SAMPLED
		ice	8015M - TPH-g	VOAs	3	HCL	

ADDITIONAL INFORMATION:

TOC = Top of well casing

*Casing Volume = $r^2h(ft) \times 7.48$ gal/ft.^{3} 4" well = 0.66 Gal./Foot 2" well = 0.163 Gal./Foot

GROUNDWATER SAMPLING LOG

PROJECT NAME: CENCO
PROJECT NO.: 1003-001-300
DATE: 1-28-2011

WELL NO. MW-601A Hospital
SAMPLED BY: Frane Sosic

WELL NOTES: May Be Dry
WELL CONDITION:

WEATHER CONDITIONS:

PURGING AND SAMPLING EQUIPMENT:
YSI 556
Interface probe (200')

WELL INFORMATION		
TOP OF CASING ELEV.		(ft.)
WELL DIAMETER		(inches)
DEPTH OF WELL		(ft.)
DEPTH TO WATER	Inaccessible	(ft.)
HEIGHT OF WATER COLUMN		(ft.)
CASING VOLUME*	Hgt. x 0.163 Gal./Ft. =	(gal)
PURGE VOLUME	x 3 =	(gal)
PRODUCT THICKNESS		(ft.)

PURGE DATA

Time:	Purge Volume (Gal.)	Flow Rate (Gal./Min.)	pH	Sp.Cond. (s/cm)	Turbidity NTUs	DO mg/L	Temperature (F / C)	TDS	ORP	Color	Odor

Sample No.	Sample Time Time	Packing	Analyses	Container	Quantity	Preserv-ative	NOTES:
		ice	8260B - VOCs + Oxys	VOAs	3	HCL	Inaccessible - landscaped over (NOT SAMPLED)
		ice	8015M - TPH-g	VOAs	3	HCL	

ADDITIONAL INFORMATION:

TOC = Top of well casing

*Casing Volume = r^2h(ft) x 7.48 gal/ft.^{3} 4" well = 0.66 Gal./Foot 2" well = 0.163 Gal./Foot

GROUNDWATER SAMPLING LOG

PROJECT NAME:	CENCO	WELL NO.	MW-603 Hospital
PROJECT NO.:	1003-001-300	SAMPLED BY:	Frane Sosic
DATE:	1-28-2011		

WELL INFORMATION		
TOP OF CASING ELEV.		(ft.)
WELL DIAMETER		(inches)
DEPTH OF WELL		(ft.)
DEPTH TO WATER	DRY	(ft.)
HEIGHT OF WATER COLUMN		(ft.)
CASING VOLUME*	Hgt. x 0.163 Gal./Ft. =	(gal)
PURGE VOLUME	x 3 =	(gal)
PRODUCT THICKNESS		(ft.)

WELL CONDITION:

WEATHER CONDITIONS:

PURGING AND SAMPLING EQUIPMENT:
YSI 556
Interface probe (200')

PURGE DATA

Time:	Purge Volume (Gal.)	Flow Rate (Gal./Min.)	pH	Sp.Cond. (s/cm)	Turbidity NTUs	DO mg/L	Temperature (F / C)	TDS	ORP	Color	Odor

Sample No.	Sample Time Time	Packing	Analyses	Container	Quantity	Preserv-ative	NOTES:
		ice	8260B - VOCs + Oxys	VOAs	3	HCL	DRY - NOT SAMPLED
		ice	8015M - TPH-g	VOAs	3	HCL	

ADDITIONAL INFORMATION:

TOC = Top of well casing

*Casing Volume = r^2h(ft) x 7.48 gal/ft.^{3}

4" well = 0.66 Gal./Foot

2" well = 0.163 Gal./Foot

GROUNDWATER SAMPLING LOG

PROJECT NAME: CENCO
PROJECT NO.: 1003-001-300
DATE: 1-28-2011

WELL NO. MW-604 Hospital
SAMPLED BY: Frane Sosic

WELL NOTES: May Be Dry
WELL CONDITION:

WEATHER CONDITIONS:

PURGING AND SAMPLING EQUIPMENT:
YSI 556
Interface probe (200')

WELL INFORMATION		
TOP OF CASING ELEV.		(ft.)
WELL DIAMETER		(inches)
DEPTH OF WELL		(ft.)
DEPTH TO WATER	DRY	(ft.)
HEIGHT OF WATER COLUMN		(ft.)
CASING VOLUME*	Hgt. x 0.163 Gal./Ft. =	(gal)
PURGE VOLUME	x 3 =	(gal)
PRODUCT THICKNESS		(ft.)

PURGE DATA

Time:	Purge Volume (Gal.)	Flow Rate (Gal./Min.)	pH	Sp.Cond. (s/cm)	Turbidity NTUs	DO mg/L	Temperature (F / C)	TDS	ORP	Color	Odor

Sample No.	Sample Time Time	Packing	Analyses	Container	Quantity	Preserv-ative	NOTES:
		ice	8260B - VOCs + Oxys	VOAs	3	HCL	DRY- NOT SAMPLED
		ice	8015M - TPH-g	VOAs	3	HCL	

ADDITIONAL INFORMATION:

TOC = Top of well casing

*Casing Volume = r^2h(ft) x 7.48 gal/ft.^{3}

4" well = 0.66 Gal./Foot

2" well = 0.163 Gal./Foot

GROUNDWATER SAMPLING LOG

PROJECT NAME: CENCO
PROJECT NO.: 1003-001-300
DATE: 1-28-2011

WELL NO. MW-605 Hospital
SAMPLED BY: Frane Sosic

WELL NOTES: May Be Dry
WELL CONDITION:

WEATHER CONDITIONS:

PURGING AND SAMPLING EQUIPMENT:
YSI 556
Interface probe (200')

WELL INFORMATION		
TOP OF CASING ELEV.		(ft.)
WELL DIAMETER		(inches)
DEPTH OF WELL		(ft.)
DEPTH TO WATER	DRY	(ft.)
HEIGHT OF WATER COLUMN		(ft.)
CASING VOLUME*	Hgt. x 0.163 Gal./Ft. =	(gal)
PURGE VOLUME	x 3 =	(gal)
PRODUCT THICKNESS		(ft.)

PURGE DATA

Time:	Purge Volume (Gal.)	Flow Rate (Gal./Min.)	pH	Sp.Cond. (s/cm)	Turbidity NTUs	DO mg/L	Temperature (F / C)	TDS	ORP	Color	Odor

Sample No.	Sample Time Time	Packing	Analyses	Container	Quantity	Preserv-ative	NOTES:
		ice	8260B - VOCs & Oxys	VOAs	3	HCL	DRY- NOT SAMPLED
		ice	8015M - TPH-g	VOAs	3	HCL	

ADDITIONAL INFORMATION:

TOC = Top of well casing

*Casing Volume = r^2h(ft) x 7.48 gal/ft.^{3}

4" well = 0.66 Gal./Foot

2" well = 0.163 Gal./Foot

GROUNDWATER SAMPLING LOG

PROJECT NAME: CENCO
PROJECT NO.: 1003-001-300
DATE: 1-28-2011

WELL NO. MW-606 Hospital
SAMPLED BY: Frane Sosic

WELL NOTES: May Be Dry
WELL CONDITION:

WEATHER CONDITIONS:

PURGING AND SAMPLING EQUIPMENT:
YSI 556
Interface probe (200')

WELL INFORMATION		
TOP OF CASING ELEV.		(ft.)
WELL DIAMETER		(inches)
DEPTH OF WELL		(ft.)
DEPTH TO WATER	DRY	(ft.)
HEIGHT OF WATER COLUMN		(ft.)
CASING VOLUME*	Hgt. x 0.163 Gal./Ft. =	(gal)
PURGE VOLUME	x 3 =	(gal)
PRODUCT THICKNESS		(ft.)

PURGE DATA

Time:	Purge Volume (Gal.)	Flow Rate (Gal./Min.)	pH	Sp.Cond. (s/cm)	Turbidity NTUs	DO mg/L	Temperature (F / C)	TDS	ORP	Color	Odor

Sample No.	Sample Time Time	Packing	Analyses	Container	Quantity	Preserv-ative	NOTES:
		ice	8260B - VOCs + Oxys	VOAs	3	HCL	DRY - NOT SAMPLED
		ice	8015M - TPH-g	VOAs	3	HCL	

ADDITIONAL INFORMATION:

TOC = Top of well casing

*Casing Volume = r^2h(ft) x 7.48 gal/ft.^{3} 4" well = 0.66 Gal./Foot 2" well = 0.163 Gal./Foot

GROUNDWATER SAMPLING LOG

PROJECT NAME: CENCO
PROJECT NO.: 1003-001-300
DATE: 1-28-2011

WELL NO. MW-607 Hospital
SAMPLED BY: Frane Sosic

WELL NOTES: May Be Dry
WELL CONDITION:

WEATHER CONDITIONS:

PURGING AND SAMPLING EQUIPMENT:
YSI 556
Interface probe (200')

WELL INFORMATION		
TOP OF CASING ELEV.		(ft.)
WELL DIAMETER		(inches)
DEPTH OF WELL		(ft.)
DEPTH TO WATER DRY		(ft.)
HEIGHT OF WATER COLUMN		(ft.)
CASING VOLUME*	Hgt. x 0.163 Gal./Ft. =	(gal)
PURGE VOLUME	x 3 =	(gal)
PRODUCT THICKNESS		(ft.)

PURGE DATA

Time:	Purge Volume (Gal.)	Flow Rate (Gal./Min.)	pH	Sp.Cond. (s/cm)	Turbidity NTUs	DO mg/L	Temperature (F / C)	TDS	ORP	Color	Odor

Sample No.	Sample Time Time	Packing	Analyses	Container	Quantity	Preserv-ative	NOTES:
		ice	8260B - VOCs + Oxys	VOAs	3	HCL	DRY- NOT SAMPLED
		ice	8015M - TPH-g	VOAs	3	HCL	

ADDITIONAL INFORMATION:

TOC = Top of well casing

*Casing Volume = $r^2h(ft) \times 7.48$ gal/ft.^{3}

4" well = 0.66 Gal./Foot

2" well = 0.163 Gal./Foot

GROUNDWATER SAMPLING LOG

PROJECT NAME:	CENCO
PROJECT NO.:	1003-001-300
DATE:	2.4.2011

WELL NO. W-1 Walker

SAMPLED BY: Frane Sosic

WELL NOTES:

WELL CONDITION:

OK

WEATHER CONDITIONS:

Scattered clouds (~60°F) / Light breeze

PURGING AND SAMPLING EQUIPMENT:

YSI 556

Interface probe (200')

WELL INFORMATION		
TOP OF CASING ELEV.		(ft.)
WELL DIAMETER	4"	(inches)
DEPTH OF WELL	129.61	(ft.)
DEPTH TO WATER	111.71	(ft.)
HEIGHT OF WATER COLUMN	17.9	(ft.)
CASING VOLUME*	Hgt. x ~~0.163~~ 0.66 Gal./Ft. = 11.814	(gal)
PURGE VOLUME	x 3 = 35.442	(gal)
PRODUCT THICKNESS		(ft.)

PURGE DATA

Time:	Purge Volume (Gal.)	Flow Rate (Gal./Min.)	pH	Sp.Cond. mS/cm	Turbidity NTUs	DO mg/L	Temperature (F/C)	TDS	ORP mV	Color	Odor
932	5		8.36	2.687	/	12.73	20.28	/	-12	Clear	None
934	10		8.33	2.691	/	6.08	21.00	/	-17	-"-	-"-
939	15		8.30	2.703	/	4.69	21.13	/	-35	-"-	-"-

Sample No.	Sample Time Time	Packing	Analyses	Container	Quantity	Preserv-ative	NOTES: Air-assist line connected
1	1000	ice	8260B - VOCs + Oxys	VOAs	3	HCL	CC_W1_020411 @ 1000
1	1000	ice	8015M - TPH-g	VOAs	3	HCL	

ADDITIONAL INFORMATION:

TOC = Top of well casing

*Casing Volume = r^2h(ft) x 7.48 gal/ft.^{3}

4" well = 0.66 Gal./Foot 2" well = 0.163 Gal./Foot

Additional Groundwater Quality Parameters

Page 2 of 2

PROJECT NAME: CENCO

PROJECT NO.: 1003-001-300

DATE: 2-4-2011

WELL NO. W-1

SAMPLED BY: Frane Sosic

Time:	Purge Volume (Gal.)	Flow Rate (Gal./Min.)	pH	Sp.Cond. µ(S/cm)	Turbidity NTUs	DO mg/L	Temperature (F/C)	TDS	ORP mV	Color	Odor
942	20		8.27	2.700		6.32	21.85		-52	Clear	None
946	25		8.21	2.693		3.37	21.86		-46.3	-"-	-"-
948	30		8.21	2.695		4.16	21.87		-52.0	-"-	-"-
954	35		8.18	2.693		4.84	21.85		-63.7	-"-	-"-

GROUNDWATER SAMPLING LOG

PROJECT NAME: CENCO
PROJECT NO.: 1003-001-300
DATE: 1-28-2011

WELL NO. W-3A Walker
SAMPLED BY: Frane Sosic

WELL NOTES: May have product
WELL CONDITION:

WEATHER CONDITIONS:

PURGING AND SAMPLING EQUIPMENT:
YSI 556
Interface probe (200')

WELL INFORMATION		
TOP OF CASING ELEV.		(ft.)
WELL DIAMETER		(inches)
DEPTH OF WELL		(ft.)
DEPTH TO WATER	DRY	(ft.)
HEIGHT OF WATER COLUMN		(ft.)
CASING VOLUME*	Hgt. x 0.163 Gal./Ft. =	(gal)
PURGE VOLUME	x 3 =	(gal)
PRODUCT THICKNESS		(ft.)

PURGE DATA

Time:	Purge Volume (Gal.)	Flow Rate (Gal./Min.)	pH	Sp.Cond. (s/cm)	Turbidity NTUs	DO mg/L	Temperature (F / C)	TDS	ORP	Color	Odor

Sample No.	Sample Time Time	Packing	Analyses	Container	Quantity	Preserv-ative	NOTES:
		ice	8260B - VOCs + Oxys	VOAs	3	HCL	DRY- NOT SAMPLED
		ice	8015M - TPH-g	VOAs	3	HCL	

ADDITIONAL INFORMATION:

TOC = Top of well casing

*Casing Volume = $r^2h(ft) \times 7.48$ gal/ft.^{3}

4" well = 0.66 Gal./Foot

2" well = 0.163 Gal./Foot

SAL - Beltshire
(714) 981-2212

GROUNDWATER SAMPLING LOG

PROJECT NAME: CENCO
PROJECT NO.: 1003-001-300
DATE: 2·4·2011 (Purged) / 2·8·2011 (sampled)

WELL NO. W-4 Walker
SAMPLED BY: Frane Sosic

WELL NOTES:
WELL CONDITION: Not good

WEATHER CONDITIONS: Scattered clouds (~ 50°F) AM

PURGING AND SAMPLING EQUIPMENT:
YSI 556
Interface probe (200')

WELL INFORMATION		
TOP OF CASING ELEV.		(ft.)
WELL DIAMETER 4"		(inches)
DEPTH OF WELL 129.71		(ft.)
DEPTH TO WATER 114.24		(ft.)
HEIGHT OF WATER COLUMN 15.47		(ft.)
CASING VOLUME*	Hgt. x ~~0.163~~ 0.66 Gal./Ft. = 10.2102	(gal)
PURGE VOLUME	x 3 = 30.6306	(gal)
PRODUCT THICKNESS		(ft.)

PURGE DATA

Time:	Purge Volume (Gal.)	Flow Rate (Gal./Min.)	pH	Sp.Cond. µ(S/cm)	Turbidity NTUs	DO mg/L	Temperature (F (C)	TDS	ORP mV	Color	Odor
816	5		8.35	2.500	/	10.84	17.33	/	268	Cloudy	Mild odor
821	10		8.38	2.558		6.97	17.55		278	-"-	-"-
833	15		8.33	2.518		5.40	12.30		261	-"-	-"-

Sample No.	Sample Time Time	Packing	Analyses	Container	Quantity	Preserv-ative	NOTES: Air-assist line connected
/	2·8·2011	ice	8260B - VOCs + Oxys	VOAs	3	HCL	Purge significantly slows down ~15 gal.
/	0900	ice	8015M - TPH-g	VOAs	3	HCL	Going dry ~ 17-18 gal.
							W-4 went dry at approx. 20 gallons
							LL_W4_020811 0900

ADDITIONAL INFORMATION:

TOC = Top of well casing

*Casing Volume = r^2h(ft) x 7.48 gal/ft.^{3}

4" well = 0.66 Gal./Foot 2" well = 0.163 Gal./Foot

Additional Groundwater Quality Parameters

Page 2 of 2

PROJECT NAME: CENCO

PROJECT NO.: 1003-001-300

DATE: 2-4-2011

WELL NO. W-4

SAMPLED BY: Frane Sosic

Time:	Purge Volume (Gal.)	Flow Rate (Gal./Min.)	pH	Sp.Cond. µS/cm	Turbidity NTUs	DO mg/L	Temperature (F/C)	TDS	ORP mV	Color	Odor
915	* 20 *		7.62	2.618		5.53	12.23		-3.5	Clear	Mild
—	25		—	—		—	—		—	—	—
—	30		—	—		—	—		—	—	—

* Well went dry after ~ 20 gallons were purged *

GROUNDWATER SAMPLING LOG

PROJECT NAME:	CENCO	WELL NO.	W-7 Site
PROJECT NO.:	1003-001-300	SAMPLED BY:	Frane Sosic
DATE:	2-2-2011		

WELL NOTES: Deep production well-no purge (sample in any order)

WELL CONDITION: OK

WEATHER CONDITIONS: Clear/sunny (~70°F)

PURGING AND SAMPLING EQUIPMENT:

~~YSI 556~~ NO PURGE

~~Interface probe (200')~~

WELL INFORMATION		
TOP OF CASING ELEV.		(ft.)
WELL DIAMETER		(inches)
DEPTH OF WELL	NO PURGE	(ft.)
DEPTH TO WATER		(ft.)
HEIGHT OF WATER COLUMN		(ft.)
CASING VOLUME*	Hgt. x 0.163 Gal./Ft. =	(gal)
PURGE VOLUME	x 3 =	(gal)
PRODUCT THICKNESS		(ft.)

PURGE DATA

Time:	Purge Volume (Gal.)	Flow Rate (Gal./Min.)	pH	Sp.Cond. (s/cm)	Turbidity NTUs	DO mg/L	Temperature (F / C)	TDS	ORP	Color	Odor

Sample No.	Sample Time Time	Packing	Analyses	Container	Quantity	Preserv-ative	NOTES:
1	0945	ice	8260B - VOCs + Oxys	VOAs	3	HCL	LL_W7_020211 @ 9:45
1	0945	ice	8015M - TPH-g	VOAs	3	HCL	

ADDITIONAL INFORMATION:

TOC = Top of well casing

*Casing Volume = r^2h(ft) x 7.48 gal/ft.^{3}

4" well = 0.66 Gal./Foot

2" well = 0.163 Gal./Foot

GROUNDWATER SAMPLING LOG

PROJECT NAME:	CENCO	WELL NO.	W-8 Site
PROJECT NO.:	1003-001-300	SAMPLED BY:	Frane Sosic
DATE:	2.7.2011		

WELL NOTES: Deep production well-no purge (sample in any order)

WELL CONDITION: OK

WEATHER CONDITIONS: Clear/Sunny

PURGING AND SAMPLING EQUIPMENT:
YSI 556
Interface probe (200')

WELL INFORMATION		
TOP OF CASING ELEV.		(ft.)
WELL DIAMETER		(inches)
DEPTH OF WELL	NO PURGE WELL	(ft.)
DEPTH TO WATER		(ft.)
HEIGHT OF WATER COLUMN		(ft.)
CASING VOLUME*	Hgt. x 0.163 Gal./Ft. =	(gal)
PURGE VOLUME	x 3 =	(gal)
PRODUCT THICKNESS		(ft.)

PURGE DATA

Time:	Purge Volume (Gal.)	Flow Rate (Gal./Min.)	pH	Sp.Cond. (s/cm)	Turbidity NTUs	DO mg/L	Temperature (F / C)	TDS	ORP	Color	Odor

Sample No.	Sample Time Time	Packing	Analyses	Container	Quantity	Preserv-ative	NOTES:
1	830	ice	8260B - VOCs + Oxys	VOAs	3	HCL	LL_W8_020711 @ 830
1	830	ice	8015M - TPH-g	VOAs	3	HCL	

ADDITIONAL INFORMATION:

TOC = Top of well casing

*Casing Volume = r^2h(ft) x 7.48 gal/ft.^{3} 4" well = 0.66 Gal./Foot 2" well = 0.163 Gal./Foot

GROUNDWATER SAMPLING LOG

PROJECT NAME:	CENCO	WELL NO.	W-9 Site
PROJECT NO.:	1003-001-300	SAMPLED BY:	Frane Sosic
DATE:	2·1·2011 (purged) / 2·2·11 (sampled)		

WELL INFORMATION		
TOP OF CASING ELEV.		(ft.)
WELL DIAMETER	2"	(inches)
DEPTH OF WELL	110.37	(ft.)
DEPTH TO WATER	94.47	(ft.)
HEIGHT OF WATER COLUMN	15.90	(ft.)
CASING VOLUME*	Hgt. x 0.163 Gal./Ft. = 2.5917	(gal)
PURGE VOLUME	x 3 = 7.7751	(gal)
PRODUCT THICKNESS		(ft.)

WELL CONDITION:
Not good

WEATHER CONDITIONS:
Clear / sunny (~67°F) / breezey

PURGING AND SAMPLING EQUIPMENT:
YSI 556
Interface probe (200')

PURGE DATA

Time:	Purge Volume (Gal.)	Flow Rate (Gal./Min.)	pH	Sp.Cond. mS/cm	Turbidity NTUs	DO mg/L	Temperature (F/C)	TDS	ORP mV	Color	Odor
1526	3		7.83	2.843	/	3.57	20.69	/	41.6	Rusty red	Mild odor
—	* 6		—	—		—	—		—	—	—
—	8		—	—		—	—		—	—	—

→ W-9 purged dry ≤4 gallons (similar to previous quarter); will allow to recharge over night prior to sampling

Sample No.	Sample Time Time	Packing	Analyses	Container	Quantity	Preserv-ative
/	2·2·2011	ice	8260B - VOCs + Oxys	VOAs	3	HCL
/	9:00	ice	8015M - TPH-g	VOAs	3	HCL

NOTES: Stinger raised ~5' ags for purge
Lots of plant debris came up; sediment too
W-9 going dry ~4 gallons...
LL_W9_020211 @ 900 (2·2·2011) Tuesday

ADDITIONAL INFORMATION:

TOC = Top of well casing

*Casing Volume = r^2h(ft) x 7.48 gal/ft.^{3}

4" well = 0.66 Gal./Foot

2" well = 0.163 Gal./Foot

GROUNDWATER SAMPLING LOG

PROJECT NAME:	CENCO	WELL NO.	W-10 Site 2
PROJECT NO.:	1003-001-300	SAMPLED BY:	Frane Sosic
DATE:	2-3-2011 (Purged) / 2-8-2011 (sampled)	WELL NOTES:	Slow recharge: purge ~~1~~ 2-3 days day prior to event conclusion
		WELL CONDITION:	NOT SO GOOD (no well bolts)
		WEATHER CONDITIONS:	Clear/sunny (~66°F)/breezy
		PURGING AND SAMPLING EQUIPMENT:	YSI 556; Interface probe (200'); SS Bailer

WELL INFORMATION

TOP OF CASING ELEV.		(ft.)
WELL DIAMETER	2"	(inches)
DEPTH OF WELL	110.21	(ft.)
DEPTH TO WATER	104.41	(ft.)
HEIGHT OF WATER COLUMN	5.8	(ft.)
CASING VOLUME*	Hgt. x 0.163 Gal./Ft. = 0.9454	(gal)
PURGE VOLUME	x 3 = 2.8362	(gal)
PRODUCT THICKNESS		(ft.)

PURGE DATA

Time:	Purge Volume (Gal.)	Flow Rate (Gal./Min.)	pH	Sp.Cond. (µS/cm)	Turbidity NTUs	DO mg/L	Temperature (F/C)	TDS	ORP µV	Color	Odor
16:12	1		7.28	1.650		5.51	16.15		-103	Clear	Strong
—	~~2~~		—	—		—	—		—	—	—
—	~~3~~		—	—		—	—		—	—	—

Sample No.	Sample Time Time	Packing	Analyses	Container	Quantity	Preservative	NOTES: W-10 is nearly fully dry/went dry ~ 0.75 gallons
1	2-8-2011	ice	8260B - VOCs + Oxys	VOAs	3	HCL	LL_W10_020811 @ 10:00
1	1000	ice	8015M - TPH-g	VOAs	3	HCL	
~~2~~		~~ice~~	~~8260B - VOCs + Oxys~~	~~VOAs~~	~~3~~	~~HCL~~	~~Duplicate~~ NO DUP
~~2~~		~~ice~~	~~8015M - TPH-g~~	~~VOAs~~	~~3~~	~~HCL~~	~~Duplicate~~

ADDITIONAL INFORMATION:

TOC = Top of well casing

*Casing Volume = $r^2h(ft) \times 7.48$ gal/ft.^{3}

4" well = 0.66 Gal./Foot

2" well = 0.163 Gal./Foot

GROUNDWATER SAMPLING LOG

PROJECT NAME: CENCO
PROJECT NO.: 1003-001-300
DATE: 2.4.2011

WELL NO. W-11 Site 2
SAMPLED BY: Frane Sosic

WELL NOTES: May have product has product SHEEN
WELL CONDITION: OK

WEATHER CONDITIONS: Partly cloudy/windy (~64°F)

PURGING AND SAMPLING EQUIPMENT:
YSI 556
Interface probe (200')

WELL INFORMATION		
TOP OF CASING ELEV.		(ft.)
WELL DIAMETER	2"	(inches)
DEPTH OF WELL	112.61	(ft.)
DEPTH TO WATER	108.37	(ft.)
HEIGHT OF WATER COLUMN	4.24	(ft.)
CASING VOLUME*	Hgt. x 0.163 Gal./Ft. = 0.69112	(gal)
PURGE VOLUME	x 3 = 2.07336	(gal)
PRODUCT THICKNESS		(ft.)

PURGE DATA

Time:	Purge Volume (Gal.)	Flow Rate (Gal./Min.)	pH	Sp.Cond. mS/cm	Turbidity NTUs	DO mg/L	Temperature (F/C)	TDS	ORP mV	Color	Odor
1534	1		8.12	2.058	/	9.04	17.03	/	-47.8	Strong Odor!	Dark grey w/sheen
1538	2		7.69	2.386	/	6.25	17.14	/	-97	-"-	Murky grey
1541	3		7.67	2.390	/	5.62	17.22	/	-119	-"-	-"-

Sample No.	Sample Time Time	Packing	Analyses	Container	Quantity	Preserv-ative	NOTES:
/	1600	ice	8260B - VOCs + Oxys	VOAs	3	HCL	LL_W11_020411 @ 16:00
/	1600	ice	8015M - TPH-g	VOAs	3	HCL	

ADDITIONAL INFORMATION:

TOC = Top of well casing

*Casing Volume = r^2h(ft) x 7.48 gal/ft.^{3} 4" well = 0.66 Gal./Foot 2" well = 0.163 Gal./Foot

GROUNDWATER SAMPLING LOG

PROJECT NAME:	CENCO	WELL NO.	W-12 Site
PROJECT NO.:	1003-001-300	SAMPLED BY:	Frane Sosic
DATE:	2-3-2011		

WELL NOTES: May Be Dry

WELL CONDITION: Good

WEATHER CONDITIONS: Clear/sunny

PURGING AND SAMPLING EQUIPMENT:
YSI 556
Interface probe (200')
SS Bailer

WELL INFORMATION		
TOP OF CASING ELEV.		(ft.)
WELL DIAMETER	2"	(inches)
DEPTH OF WELL	116.10	(ft.)
DEPTH TO WATER	109.55	(ft.)
HEIGHT OF WATER COLUMN	6.55	(ft.)
CASING VOLUME*	Hgt. x 0.163 Gal./Ft. = 1.0675	(gal)
PURGE VOLUME	x 3 = 3.2025	(gal)
PRODUCT THICKNESS		(ft.)

PURGE DATA

Time:	Purge Volume (Gal.)	Flow Rate (Gal./Min.)	pH	Sp.Cond. mS/cm	Turbidity NTUs	DO mg/L	Temperature (F/C)	TDS	ORP mV	Color	Odor
834	1		8.31	2.121	/	2.46	16.29	/	-113	Dark grey	Slight
841	2		8.30	2.130		2.91	16.73		-98	-"-	-"-
845	3		8.28	2.134		2.85	16.65		-99	-"-	-"-

Sample No.	Sample Time Time	Packing	Analyses	Container	Quantity	Preserv-ative	NOTES:
1	0900	ice	8260B - VOCs + Oxys	VOAs	3	HCL	LL_W12_020311 @ 9:00
1	0900	ice	8015M - TPH-g	VOAs	3	HCL	

ADDITIONAL INFORMATION:

TOC = Top of well casing

*Casing Volume = r^2h(ft) x 7.48 gal/ft.^{3}

4" well = 0.66 Gal./Foot

2" well = 0.163 Gal./Foot

GROUNDWATER SAMPLING LOG

PROJECT NAME:	CENCO	WELL NO.	MW-14A Hospital
PROJECT NO.:	1003-001-300	SAMPLED BY:	Frane Sosic
DATE:	1.31.2011		

WELL INFORMATION		
TOP OF CASING ELEV.		(ft.)
WELL DIAMETER	2"	(inches)
DEPTH OF WELL	111.85	(ft.)
DEPTH TO WATER	99.27	(ft.)
HEIGHT OF WATER COLUMN	12.58	(ft.)
CASING VOLUME*	Hgt. x 0.163 Gal./Ft. = 2.05054	(gal)
PURGE VOLUME	x 3 = 6.15162	(gal)
PRODUCT THICKNESS		(ft.)

WELL CONDITION:
OK

WEATHER CONDITIONS:
Clear/sunny/~ 60°F AM & ~ 70°F PM

PURGING AND SAMPLING EQUIPMENT:
YSI 556
Interface probe (200')

PURGE DATA

Time:	Purge Volume (Gal.)	Flow Rate (Gal./Min.)	pH	Sp.Cond. µS/cm	Turbidity NTUs	DO mg/L	Temperature (F/C)	TDS	ORP µV	Color	Odor
0820	2		8.56	1.961	/	3.84	17.25	/	199	Cloudy	None
0826	4		8.32	1.959	/	6.47	18.36	/	188	-"-	-"-
0831	6		8.30	1.948	/	13.16	18.32	/	185.4	Clear	-"-

Sample No.	Sample Time Time	Packing	Analyses	Container	Quantity	Preserv-ative	NOTES:
1	0845	ice	8260B - VOCs + Oxys	VOAs	3	HCL	LL_W14A_013111 @ 8:45
1	0845	ice	8015M - TPH-g	VOAs	3	HCL	

ADDITIONAL INFORMATION:

TOC = Top of well casing

*Casing Volume = r^2h(ft) x 7.48 gal/ft.^{3}

4" well = 0.66 Gal./Foot

2" well = 0.163 Gal./Foot

GROUNDWATER SAMPLING LOG

PROJECT NAME:	CENCO	WELL NO.	MW-14B Hospital
PROJECT NO.:	1003-001-300	SAMPLED BY:	Frane Sosic
DATE:	1·31·2011		

WELL INFORMATION		
TOP OF CASING ELEV.		(ft.)
WELL DIAMETER	2"	(inches)
DEPTH OF WELL	112.09	(ft.)
DEPTH TO WATER	96.94	(ft.)
HEIGHT OF WATER COLUMN	15.15	(ft.)
CASING VOLUME*	Hgt. x 0.163 Gal./Ft. = 2.46945	(gal)
PURGE VOLUME	x 3 = 7.40835	(gal)
PRODUCT THICKNESS		(ft.)

WELL CONDITION:
OK

WEATHER CONDITIONS:
Clear/sunny (~70°F) scattered clouds slight breeze

PURGING AND SAMPLING EQUIPMENT:
YSI 556
Interface probe (200')

PURGE DATA

Time:	Purge Volume (Gal.)	Flow Rate (Gal./Min.)	pH	Sp.Cond. µ(S/cm)	Turbidity NTUs	DO mg/L	Temperature C	TDS	ORP mV	Color	Odor
1040	2		8.41	1.656	/	15.16	18.83	/	210	Clear	Slight
1047	4		8.22	1.778	/	19.28	18.55	/	203	-"-	-"-
1100	7		8.17	1.791	/	19.82	18.48	/	194	-"-	-"-

Sample No.	Sample Time Time	Packing	Analyses	Container	Quantity	Preserv-ative
1	1130	ice	8260B - VOCs + Oxys	VOAs	3	HCL
1	1130	ice	8015M - TPH-g	VOAs	3	HCL

NOTES:
Pulled up entire 166' stinger to get stuck bailer (twice)

LL_W14B_013111 @ 1130

ADDITIONAL INFORMATION:

TOC = Top of well casing

*Casing Volume = r^2h(ft) x 7.48 gal/ft.^{3}

4" well = 0.66 Gal./Foot

2" well = 0.163 Gal./Foot

GROUNDWATER SAMPLING LOG

PROJECT NAME:	CENCO	WELL NO.	MW-14C Hospital
PROJECT NO.:	1003-001-300	SAMPLED BY:	Frane Sosic
DATE:	1.31.2011		

WELL INFORMATION		
TOP OF CASING ELEV.		(ft.)
WELL DIAMETER		(inches)
DEPTH OF WELL	166.57	(ft.)
DEPTH TO WATER	97.15	(ft.)
HEIGHT OF WATER COLUMN	69.42	(ft.)
CASING VOLUME*	Hgt. x 0.163 Gal./Ft. = 11.31546	(gal)
PURGE VOLUME	x 3 = 33.94638	(gal)
PRODUCT THICKNESS		(ft.)

WELL CONDITION:
OK

WEATHER CONDITIONS:
Clear/Sunny (~70°F)

PURGING AND SAMPLING EQUIPMENT:
YSI 556
Interface probe (200')

PURGE DATA

Time:	Purge Volume (Gal.)	Flow Rate (Gal./Min.)	pH	Sp.Cond. mS/cm	Turbidity NTUs	DO mg/L	Temperature (F/C)	TDS	ORP mV	Color	Odor
1232	5		8.29	1.711	/	11.31	20.12	/	225	Clear	Slight
1255	10		8.13	1.720	/	10.78	20.44	/	213	-"-	-"-
1323	15		7.97	1.708	/	10.10	20.79	/	199	-"-	-"-

Sample No.	Sample Time Time	Packing	Analyses	Container	Quantity	Preserv-ative	NOTES:
1	1600	ice	8260B - VOCs + Oxys	VOAs	3	HCL	
1	1600	ice	8015M - TPH-g	VOAs	3	HCL	

ADDITIONAL INFORMATION:

TOC = Top of well casing

*Casing Volume = r^2h(ft) x 7.48 gal/ft.^{3}

4" well = 0.66 Gal./Foot

2" well = 0.163 Gal./Foot

Additional Groundwater Quality Parameters

Page 2 of 2

PROJECT NAME: CENCO

PROJECT NO.: 1003-001-300

DATE: 1.31.2011

WELL NO. W-14C

SAMPLED BY: Frane Sosic

Time:	Purge Volume (Gal.)	Flow Rate (Gal./Min.)	pH	Sp.Cond. mS/cm)	Turbidity NTUs	DO mg/L	Temperature (F/C)	TDS	ORP mV	Color	Odor
1352	20		8.00	1.669		8.25	20.60		188	Clear	Slight
1425	25		7.86	1.654		13.71	20.69		187	-"-	-"-
1458	30		7.98	1.644		10.69	20.30		187	-"-	-"-
1531	34		7.88	1.640		10.65	19.84		188	-"-	-"-

GROUNDWATER SAMPLING LOG

PROJECT NAME:	CENCO	WELL NO.	MW-15A Hospital
PROJECT NO.:	1003-001-300	SAMPLED BY:	Frane Sosic
DATE:	2·1·2011		

WELL INFORMATION		
TOP OF CASING ELEV.		(ft.)
WELL DIAMETER	2"	(inches)
DEPTH OF WELL	125.70	(ft.)
DEPTH TO WATER	116.27	(ft.)
HEIGHT OF WATER COLUMN	9.43	(ft.)
CASING VOLUME*	Hgt. x 0.163 Gal./Ft. = 1.53709	(gal)
PURGE VOLUME	x 3 = 4.61127	(gal)
PRODUCT THICKNESS		(ft.)

WELL CONDITION:
OK (locked!)

WEATHER CONDITIONS:
Clear/sunny/cool (~50°F)

PURGING AND SAMPLING EQUIPMENT:
YSI 556
Interface probe (200')

PURGE DATA

Time:	Purge Volume (Gal.)	Flow Rate (Gal./Min.)	pH	Sp.Cond. µ (s/cm)	Turbidity NTUs	DO mg/L	Temperature (F/C)	TDS	ORP µV	Color	Odor
0810	2		7.89	2.325		4.94	15.96		67.5	Silty gray	Strong odor
0820	4		7.89	2.296		2.05	16.12		-33	-//-	-//-

Sample No.	Sample Time Time	Packing	Analyses	Container	Quantity	Preserv-ative	NOTES:
1	0845	ice	8260B - VOCs + Oxys	VOAs	3	HCL	LL_W15A_020111 @ 8:45
1	0845	ice	8015M - TPH-g	VOAs	3	HCL	

ADDITIONAL INFORMATION:

TOC = Top of well casing

*Casing Volume = r^2h(ft) x 7.48 gal/ft.^{3} 4" well = 0.66 Gal./Foot 2" well = 0.163 Gal./Foot

GROUNDWATER SAMPLING LOG

PROJECT NAME:	CENCO	WELL NO.	MW-15B Hospital
PROJECT NO.:	1003-001-300	SAMPLED BY:	Frane Sosic
DATE:	2·1·2011		

WELL INFORMATION		
TOP OF CASING ELEV.		(ft.)
WELL DIAMETER	2"	(inches)
DEPTH OF WELL	155.60	(ft.)
DEPTH TO WATER	116.11	(ft.)
HEIGHT OF WATER COLUMN	39.49	(ft.)
CASING VOLUME*	Hgt. x 0.163 Gal./Ft. = 6.43687	(gal)
PURGE VOLUME	x 3 = 19.31061	(gal)
PRODUCT THICKNESS		(ft.)

WELL CONDITION:
OK

WEATHER CONDITIONS:
Partly cloudy (~50°F) / slight breeze

PURGING AND SAMPLING EQUIPMENT:
YSI 556
Interface probe (200')

PURGE DATA

Time:	Purge Volume (Gal.)	Flow Rate (Gal./Min.)	pH	Sp.Cond. (S/cm)	Turbidity NTUs	DO mg/L	Temperature (F/C)	TDS	ORP mV	Color	Odor
1007	5		8.44	2.144	/	9.80	17.86	/	307	Cloudy gray	Mild odor
1016	10		8.27	2.149	/	4.55	18.50	/	301	Cloudy	Slight odor
1027	15		8.16	2.161	/	3.89	18.54	/	294	Clear	None
1035	20		8.15	2.156	/	4.58	18.42	/	286	Clear	None

Sample No.	Sample Time Time	Packing	Analyses	Container	Quantity	Preserv-ative
/	1050	ice	8260B - VOCs + Oxys	VOAs	3	HCL
/	1050	ice	8015M - TPH-g	VOAs	3	HCL

NOTES: Stinger raised ~ 5' up to avoid too much silt @ bottom. Pieces of PVC and bailer chunk come up from well during purge

LL_W15B_020111 @ 10:50

1013 /
58
46 18.2

ADDITIONAL INFORMATION:

TOC = Top of well casing

*Casing Volume = $r^2h(ft) \times 7.48$ gal/ft.^{3}

4" well = 0.66 Gal./Foot

2" well = 0.163 Gal./Foot

GROUNDWATER SAMPLING LOG

PROJECT NAME:	CENCO
PROJECT NO.:	1003-001-300
DATE:	2·1·2011

WELL NO.	MW-15C	Hospital
SAMPLED BY:	Frane Sosic	

WELL INFORMATION		
TOP OF CASING ELEV.		(ft.)
WELL DIAMETER	2"	(inches)
DEPTH OF WELL	197.34	(ft.)
DEPTH TO WATER	115.71	(ft.)
HEIGHT OF WATER COLUMN	81.63	(ft.)
CASING VOLUME*	Hgt. x 0.163 Gal./Ft. = 13.30569	(gal)
PURGE VOLUME	x 3 = 39.91707	(gal)
PRODUCT THICKNESS		(ft.)

WELL CONDITION:
OK

WEATHER CONDITIONS:
Scattered clouds (~65°F) / light breeze

PURGING AND SAMPLING EQUIPMENT:
YSI 5S6
Interface probe (200')

PURGE DATA

Time:	Purge Volume (Gal.)	Flow Rate (Gal./Min.)	pH	Sp.Cond. µ(S)/cm)	Turbidity NTUs	DO mg/L	Temperature (F/C)	TDS	ORP µV	Color	Odor
1205	5		8.32	2.101	/	4.20	18.37	/	180.3	Cloudy	Strong
1218	10		8.04	2.104		4.59	18.42		164.5	Clear	Slight
1231	15		7.91	2.102	/	3.62	18.59	/	163.1	-"-	-"-

Sample No.	Sample Time Time	Packing	Analyses	Container	Quantity	Preserv-ative
1	1420	ice	8260B - VOCs + Oxys	VOAs	3	HCL
1	1420	ice	8015M - TPH-g	VOAs	3	HCL

NOTES: Well allowed to vent for ~ 30 min prior to purging due to fumes w/i well casing.

LL_W15C_020111 @ 1420

ADDITIONAL INFORMATION:

TOC = Top of well casing

*Casing Volume = r^2h(ft) x 7.48 gal/ft.^{3}

4" well = 0.66 Gal./Foot

2" well = 0.163 Gal./Foot

Additional Groundwater Quality Parameters

Page 2 of 2

PROJECT NAME: CENCO

PROJECT NO.: 1003-001-300

DATE: 2-1-2011

WELL NO. 15C

SAMPLED BY: Frane Sosic

Time:	Purge Volume (Gal.)	Flow Rate (Gal./Min.)	pH	Sp.Cond. µS/cm)	Turbidity NTUs	DO mg/L	Temperature (F (C)	TDS	ORP µV	Color	Odor
1237	20		7.89	2.112		8.53	18.24		155	Clear	Slight
1302	25		7.83	2.102		7.07	18.65		145	-11-	-11-
1320	30		7.81	2.102		11.03	18.63		134	-11-	-11-
1332	35		7.79	2.107		5.06	18.65		129.4	-11-	-11-
1350	40		7.81	2.086		4.58	18.64		123.7	-11-	-11-

GROUNDWATER SAMPLING LOG

PROJECT NAME: CENCO
PROJECT NO.: 1003-001-300
DATE: 2.7.2011

WELL NO. MW-16A Walker
SAMPLED BY: Frane Sosic

WELL NOTES:
WELL CONDITION:
OK

WEATHER CONDITIONS:
Clear/sunny (~75°F)

PURGING AND SAMPLING EQUIPMENT:
YSI 556
Interface probe (200')

WELL INFORMATION			
TOP OF CASING ELEV.			(ft.)
WELL DIAMETER	2"		(inches)
DEPTH OF WELL	123.12		(ft.)
DEPTH TO WATER	114.43		(ft.)
HEIGHT OF WATER COLUMN	8.69		(ft.)
CASING VOLUME*	Hgt. x 0.163 Gal./Ft. =	1.416417	(gal)
PURGE VOLUME	x 3 =	4.24941	(gal)
PRODUCT THICKNESS			(ft.)

PURGE DATA

Time:	Purge Volume (Gal.)	Flow Rate (Gal./Min.)	pH	Sp.Cond. mS/cm	Turbidity NTUs	DO mg/L	Temperature (F/C)	TDS	ORP mV	Color	Odor
954	3		8.20	2.316	/	3.72	19.69	/	250	Gray	HC odor
1015	6		7.82	2.357	/	4.09	17.95	/	249	Light gray	-"-

Sample No.	Sample Time Time	Packing	Analyses	Container	Quantity	Preservative
/	1300	ice	8260B - VOCs + Oxys	VOAs	3	HCL
/	1300	ice	8015M - TPH-g	VOAs	3	HCL

NOTES:
Slow recharge well...
Casing capped - vacuum hose connected to top of cap instead of stinger in order to draw aquifer recharge water in to the well. Process will go for 45 mins - 1 hour.
LL_W16A_020711 @ 13:00

ADDITIONAL INFORMATION:

TOC = Top of well casing

*Casing Volume = r^2h(ft) x 7.48 gal/ft.^{3}

4" well = 0.66 Gal./Foot

2" well = 0.163 Gal./Foot

GROUNDWATER SAMPLING LOG

PROJECT NAME:	CENCO	WELL NO.	MW-16B Walker
PROJECT NO.:	1003-001-300	SAMPLED BY:	Frane Sosic
DATE:	2.7.2011		

WELL NOTES:

WELL CONDITION:

OK

WEATHER CONDITIONS:

Clear & sunny (~80°F)

Weak breeze

PURGING AND SAMPLING EQUIPMENT:

YSI 556

Interface probe (200')

WELL INFORMATION		
TOP OF CASING ELEV.		(ft.)
WELL DIAMETER	2"	(inches)
DEPTH OF WELL	160.25	(ft.)
DEPTH TO WATER	118.59	(ft.)
HEIGHT OF WATER COLUMN	41.66	(ft.)
CASING VOLUME*	Hgt. x 0.163 Gal./Ft. = 6.7905	(gal)
PURGE VOLUME	x 3 = 20.37174	(gal)
PRODUCT THICKNESS		(ft.)

PURGE DATA

Time:	Purge Volume (Gal.)	Flow Rate (Gal./Min.)	pH	Sp.Cond. (µS/cm)	Turbidity NTUs	DO mg/L	Temperature (F/C)	TDS	ORP mV	Color Cloudy	Odor Mild
1319	5		8.08	2.968	/	5.86	22.59	/	-200	Gray	HC odor
1328	10		8.05	2.696	/	3.85	22.25	/	-231	-"-	-"-
1332	15		8.04	2.595	/	8.03	22.60	/	-254	Cloudy	-"-
1344	20		8.12	2.426	/	3.54	22.62	/	-297	Clear	-"-

Sample No.	Sample Time Time	Packing	Analyses	Container	Quantity	Preservative
/	1500	ice	8260B - VOCs + Oxys	VOAs	3	HCL
/	1500	ice	8015M - TPH-g	VOAs	3	HCL

NOTES: Stinger raised ~7-8' ags to allow water to purge bottom

LL_W16B_020711 @ 1500

ADDITIONAL INFORMATION:

TOC = Top of well casing

*Casing Volume = r^2h(ft) x 7.48 gal/ft.^{3}

4" well = 0.66 Gal./Foot

2" well = 0.163 Gal./Foot

GROUNDWATER SAMPLING LOG

PROJECT NAME:	CENCO
PROJECT NO.:	1003-001-300
DATE:	2-7-2011

WELL NO.	MW-16C	Walker
SAMPLED BY:	Frane Sosic	

WELL NOTES:

WELL CONDITION:
OK

WEATHER CONDITIONS:
Clear/sunny (~80°F)
Slight breeze

PURGING AND SAMPLING EQUIPMENT:
YSI 556
Interface probe (200')

WELL INFORMATION		
TOP OF CASING ELEV.		(ft.)
WELL DIAMETER	2"	(inches)
DEPTH OF WELL	196.30	(ft.)
DEPTH TO WATER	118.73	(ft.)
HEIGHT OF WATER COLUMN	77.57	(ft.)
CASING VOLUME*	Hgt. x 0.163 Gal./Ft. = 12.64391	(gal)
PURGE VOLUME	x 3 = 37.93173	(gal)
PRODUCT THICKNESS		(ft.)

PURGE DATA

Time:	Purge Volume (Gal.)	Flow Rate (Gal./Min.)	pH	Sp.Cond. mS/cm	Turbidity NTUs	DO mg/L	Temperature (F/C)	TDS	ORP mV	Color	Odor Strong
1350	5		8.27	1.447	/	4.41	22.91	/	-308	Clear	H2S/sulphur odor
1358	10		8.24	1.465	/	3.94	22.81	/	-307	-//-	-//- H2S/sulphur
1405	15		8.16	1.536	/	3.83	22.64	/	-310	-//-	-//-

Sample No.	Sample Time Time	Packing	Analyses	Container	Quantity	Preserv-ative	NOTES:
1	1600	ice	8260B - VOCs + Oxys	VOAs	3	HCL	LL_W16C_020711 @ 1600
1	1600	ice	8015M - TPH-g	VOAs	3	HCL	

ADDITIONAL INFORMATION:

TOC = Top of well casing

*Casing Volume = r^2h(ft) x 7.48 gal/ft.^{3}

4" well = 0.66 Gal./Foot

2" well = 0.163 Gal./Foot

Additional Groundwater Quality Parameters

Page 2 of 2

PROJECT NAME: CENCO

PROJECT NO.: 1003-001-300

DATE: 2·7·2011

WELL NO. 16C

SAMPLED BY: Frane Sosic

Time:	Purge Volume (Gal.)	Flow Rate (Gal./Min.)	pH	Sp.Cond. mS/cm	Turbidity NTUs	DO mg/L	Temperature (F/C)	TDS	ORP mV	Color	Odor
1412	20		8.17	1.557		4.64	22.68		-307	Clear	Same as before: HC + sulphur
1420	25		8.19	1.576		4.05	22.71		-310	-"-	-"-
1426	30		8.22	1.584		5.24	22.64		-313	-"-	-"-
1439	35		8.10	1.596		4.70	22.53		-300	-"-	-"-
1451	40		8.03	1.607		4.34	22.37		-285	Clear	-"-

GROUNDWATER SAMPLING LOG

PROJECT NAME:	CENCO	WELL NO.	W-17A Site
PROJECT NO.:	1003-001-300	SAMPLED BY:	Frane Sosic
DATE:	2-2-2011		

WELL INFORMATION		
TOP OF CASING ELEV.		(ft.)
WELL DIAMETER	2"	(inches)
DEPTH OF WELL	108.30	(ft.)
DEPTH TO WATER	103.26	(ft.)
HEIGHT OF WATER COLUMN	5.04	(ft.)
CASING VOLUME*	Hgt. x 0.163 Gal./Ft. = 0.82152	(gal)
PURGE VOLUME	x 3 = 2.46456	(gal)
PRODUCT THICKNESS		(ft.)

WELL CONDITION:
OK

WEATHER CONDITIONS:
Clear/sunny (~70°F)
Winds pick up ~ 12:00

PURGING AND SAMPLING EQUIPMENT:
YSI 556
Interface probe (200')

PURGE DATA

Time:	Purge Volume (Gal.)	Flow Rate (Gal./Min.)	pH	Sp.Cond. µ(S/cm)	Turbidity NTUs	DO mg/L	Temperature (F/C)	TDS	ORP mV	Color	Odor
1214	1		8.43	2.145	/	5.62	17.65	/	369	Olive gray	Mild HC odor
1226	2		8.37	2.140	/	6.46	17.76	/	352	-//-	-//-
1238	3		8.36	2.152	/	5.96	17.67	/	349	-//-	-//-

Sample No.	Sample Time Time	Packing	Analyses	Container	Quantity	Preserv-ative
/	1330	ice	8260B - VOCs + Oxys	VOAs	3	HCL
/	1330	ice	8015M - TPH-g	VOAs	3	HCL

NOTES:
Very slow purge -> took a while for water to come up (fine spray/mist in pump-truck view side glass tube)

ADDITIONAL INFORMATION:

TOC = Top of well casing

*Casing Volume = r^2h(ft) x 7.48 gal/ft.^{3}

4" well = 0.66 Gal./Foot

2" well = 0.163 Gal./Foot

GROUNDWATER SAMPLING LOG

PROJECT NAME:	CENCO	WELL NO.	W-17B Site
PROJECT NO.:	1003-001-300	SAMPLED BY:	Frane Sosic
DATE:	2·2·2011		

WELL INFORMATION		
TOP OF CASING ELEV.		(ft.)
WELL DIAMETER	2"	(inches)
DEPTH OF WELL	169.60	(ft.)
DEPTH TO WATER	106.96	(ft.)
HEIGHT OF WATER COLUMN	62.64	(ft.)
CASING VOLUME*	Hgt. x 0.163 Gal./Ft. = 10.21032	(gal)
PURGE VOLUME	x 3 = 30.63096	(gal)
PRODUCT THICKNESS		(ft.)

WELL CONDITION:
OK

WEATHER CONDITIONS:
Clear/sunny (~70°F)
Winds picked up ~ 12:00

PURGING AND SAMPLING EQUIPMENT:
YSI 556
Interface probe (200')

PURGE DATA

Time:	Purge Volume (Gal.)	Flow Rate (Gal./Min.)	pH	Sp.Cond. mS/cm)	Turbidity NTUs	DO mg/L	Temperature (F/C)	TDS	ORP mV	Color	Odor
1300	5		8.45	1.771		3.75	23.16		-118	Light gray	Strong HC decay odor
1308	10		8.47	1.744		5.55	24.01		-175	Clear	-"-
1313	15		8.46	1.742		9.89	24.11		-213	-"-	-"-

Sample No.	Sample Time Time	Packing	Analyses	Container	Quantity	Preserv-ative
1	1500	ice	8260B - VOCs + Oxys	VOAs	3	HCL
1	1500	ice	8015M - TPH-g	VOAs	3	HCL

NOTES: Very slow: no H_2O came up for first 30 mins or so. Stinger raised + lowered several times... still no luck. Stinger racked 10-11 feet and finally purge began.

LL_W17B_020211

ADDITIONAL INFORMATION:

TOC = Top of well casing

*Casing Volume = r^2h(ft) x 7.48 gal/ft.^{3}

4" well = 0.66 Gal./Foot

2" well = 0.163 Gal./Foot

Additional Groundwater Quality Parameters

Page 2 of 2

PROJECT NAME: CENCO

PROJECT NO.: 1003-001-300

DATE: 2-2-2011

WELL NO. 17B

SAMPLED BY: Frane Sosic

Time:	Purge Volume (Gal.)	Flow Rate (Gal./Min.)	pH	Sp.Cond. mS/cm)	Turbidity NTUs	DO mg/L	Temperature (F/C)	TDS	ORP mV	Color	Odor
1319	20		8.45	1.736		7.38	24.31		-251	Clear	Strong HC odor
1326	25		8.45	1.732		10.64	23.33		-260	-11-	-11-
1335	30		8.43	1.724		3.45	24.08		-269	-11-	-11-

GROUNDWATER SAMPLING LOG

PROJECT NAME:	CENCO	WELL NO.	W-17C Site
PROJECT NO.:	1003-001-300	SAMPLED BY:	Frane Sosic
DATE:	2-2-2011		

WELL INFORMATION		
TOP OF CASING ELEV.		(ft.)
WELL DIAMETER	2"	(inches)
DEPTH OF WELL	200.00	(ft.)
DEPTH TO WATER	106.97	(ft.)
HEIGHT OF WATER COLUMN	93.03	(ft.)
CASING VOLUME*	Hgt. x 0.163 Gal./Ft. = 15.16389	(gal)
PURGE VOLUME	x 3 = 45.49167	(gal)
PRODUCT THICKNESS		(ft.)

WELL CONDITION:
OK

WEATHER CONDITIONS:
Clear/Sunny (~75°F)
Breeze picked up in the p.m.

PURGING AND SAMPLING EQUIPMENT:
YSI 556
Interface probe (200')

PURGE DATA

Time:	Purge Volume (Gal.)	Flow Rate (Gal./Min.)	pH	Sp.Cond. µ(S/cm)	Turbidity NTUs	DO mg/L	Temperature (F/C)	TDS	ORP µV	Color	Odor
1406	5		8.61	1.540	/	4.34	23.42	/	-286	Clear	Strong bio-stink
1423	10		8.54	1.562	/	4.59	23.46	/	-292	-"-	-"- (NATURAL
1431	15		8.50	1.555	/	5.94	23.85	/	-295	-"-	-"- GAS)

ODORS

Sample No.	Sample Time Time	Packing	Analyses	Container	Quantity	Preserv-ative	NOTES:
1	1600	ice	8260B - VOCs + Oxys	VOAs	3	HCL	
1	1600	ice	8015M - TPH-g	VOAs	3	HCL	

ADDITIONAL INFORMATION:

TOC = Top of well casing

*Casing Volume = r^2h(ft) x 7.48 gal/ft.^{3}

4" well = 0.66 Gal./Foot

2" well = 0.163 Gal./Foot

Additional Groundwater Quality Parameters

Page 2 of 2

PROJECT NAME: CENCO

PROJECT NO.: 1003-001-300

DATE: 2-2-2011

WELL NO. 17C

SAMPLED BY: Frane Sosic

Time:	Purge Volume (Gal.)	Flow Rate (Gal./Min.)	pH	Sp.Cond. µS/cm	Turbidity NTUs	DO mg/L	Temperature (F/C)	TDS	ORP mV	Color	Odor
1440	20	Vac truck	8.55	1.544		10.61	22.93		-298	Clear	(same as above)
1450	25		8.48	1.528		5.45	22.64		-299	-"-	-"-
1459	30		8.46	1.539		4.72	22.50		-305	-"-	-"-
1505	35		8.47	1.532		3.96	22.48		-306	-"-	-"-
1513	40		8.46	1.528		3.97	23.00		-303	-"-	-"-
1521	45		8.47	1.523		3.96	23.10		-301	-"-	-"-

1451 -> 25 gal. transferred from k-o tank into main tank

Appendix H

SunStar Laboratories, Inc.
PROVIDING QUALITY ANALYTICAL SERVICES NATIONWIDE

25712 Commercentre Drive
Lake Forest, California 92630
949.297.5020 Phone
949.297.5027 Fax

08 February 2011

Jeremy Squire
Murex
2640 Walnut Ave. Unit F
Tustin, CA 92780

RE: Cenco

Enclosed are the results of analyses for samples received by the laboratory on 01/31/11 16:31. If you have any questions concerning this report, please feel free to contact me.

Sincerely,

Daniel Chavez
Project Manager

SunStar Laboratories, Inc.
PROVIDING QUALITY ANALYTICAL SERVICES NATIONWIDE

25712 Commercentre Drive
Lake Forest, California 92630
949.297.5020 Phone
949.297.5027 Fax

Murex	Project: Cenco	
2640 Walnut Ave. Unit F	Project Number: 1003-001-300	**Reported:**
Tustin CA, 92780	Project Manager: Jeremy Squire	02/08/11 16:45

ANALYTICAL REPORT FOR SAMPLES

Sample ID	Laboratory ID	Matrix	Date Sampled	Date Received
LL_W14A_013111	T110093-01	Water	01/31/11 08:45	01/31/11 16:31
LL_W14B_013111	T110093-02	Water	01/31/11 11:30	01/31/11 16:31
LL_W14C_013111	T110093-03	Water	01/31/11 16:00	01/31/11 16:31
TB_013111	T110093-04	Water	01/31/11 00:00	01/31/11 16:31

SunStar Laboratories, Inc.

The results in this report apply to the samples analyzed in accordance with the chain of custody document. This analytical report must be reproduced in its entirety.

Daniel Chavez, Project Manager

SunStar Laboratories, Inc.
Providing Quality Analytical Services Nationwide

25712 Commercentre Drive
Lake Forest, California 92630
949.297.5020 Phone
949.297.5027 Fax

Murex	Project: Cenco	
2640 Walnut Ave. Unit F	Project Number: 1003-001-300	**Reported:**
Tustin CA, 92780	Project Manager: Jeremy Squire	02/08/11 16:45

LL_W14A_013111

T110093-01 (Water)

Analyte	Result	Reporting Limit	Units	Dilution	Batch	Prepared	Analyzed	Method	Notes
SunStar Laboratories, Inc.									
Purgeable Petroleum Hydrocarbons by EPA 8015C									
C6-C12 (GRO)	ND	50	ug/l	1	1020105	02/01/11	02/02/11	EPA 8015C	
Surrogate 4-Bromofluorobenzene		*86.6 %*	*72.6-146*		"	"	"	"	
Volatile Organic Compounds by EPA Method 8260B									
Bromobenzene	ND	1.0	ug/l	1	1020104	02/01/11	02/04/11	EPA 8260B	
Bromochloromethane	ND	1.0	"	"	"	"	"	"	
Bromodichloromethane	ND	1.0	"	"	"	"	"	"	
Bromoform	ND	1.0	"	"	"	"	"	"	
Bromomethane	ND	1.0	"	"	"	"	"	"	
n-Butylbenzene	ND	1.0	"	"	"	"	"	"	
sec-Butylbenzene	ND	1.0	"	"	"	"	"	"	
tert-Butylbenzene	ND	1.0	"	"	"	"	"	"	
Carbon tetrachloride	ND	0.50	"	"	"	"	"	"	
Chlorobenzene	ND	1.0	"	"	"	"	"	"	
Chloroethane	ND	1.0	"	"	"	"	"	"	
Chloroform	ND	1.0	"	"	"	"	"	"	
Chloromethane	ND	1.0	"	"	"	"	"	"	
2-Chlorotoluene	ND	1.0	"	"	"	"	"	"	
4-Chlorotoluene	ND	1.0	"	"	"	"	"	"	
Dibromochloromethane	ND	1.0	"	"	"	"	"	"	
1,2-Dibromo-3-chloropropane	ND	1.0	"	"	"	"	"	"	
1,2-Dibromoethane (EDB)	ND	1.0	"	"	"	"	"	"	
Dibromomethane	ND	1.0	"	"	"	"	"	"	
1,2-Dichlorobenzene	ND	1.0	"	"	"	"	"	"	
1,3-Dichlorobenzene	ND	1.0	"	"	"	"	"	"	
1,4-Dichlorobenzene	ND	1.0	"	"	"	"	"	"	
Dichlorodifluoromethane	ND	0.50	"	"	"	"	"	"	
1,1-Dichloroethane	ND	1.0	"	"	"	"	"	"	
1,2-Dichloroethane	ND	0.50	"	"	"	"	"	"	
1,1-Dichloroethene	ND	1.0	"	"	"	"	"	"	
cis-1,2-Dichloroethene	ND	1.0	"	"	"	"	"	"	
trans-1,2-Dichloroethene	ND	1.0	"	"	"	"	"	"	

SunStar Laboratories, Inc.

The results in this report apply to the samples analyzed in accordance with the chain of custody document. This analytical report must be reproduced in its entirety.

Daniel Chavez, Project Manager

SunStar Laboratories, Inc.
Providing Quality Analytical Services Nationwide

25712 Commercentre Drive
Lake Forest, California 92630
949.297.5020 Phone
949.297.5027 Fax

Murex	Project: Cenco	
2640 Walnut Ave. Unit F	Project Number: 1003-001-300	**Reported:**
Tustin CA, 92780	Project Manager: Jeremy Squire	02/08/11 16:45

LL_W14A_013111

T110093-01 (Water)

SunStar Laboratories, Inc.

Volatile Organic Compounds by EPA Method 8260B

Analyte	Result	Reporting Limit	Units	Dilution	Batch	Prepared	Analyzed	Method	Notes
1,2-Dichloropropane	ND	1.0	ug/l	1	1020104	02/01/11	02/04/11	EPA 8260B	
1,3-Dichloropropane	ND	1.0	"	"	"	"	"	"	
2,2-Dichloropropane	ND	1.0	"	"	"	"	"	"	
1,1-Dichloropropene	ND	1.0	"	"	"	"	"	"	
cis-1,3-Dichloropropene	ND	0.50	"	"	"	"	"	"	
trans-1,3-Dichloropropene	ND	0.50	"	"	"	"	"	"	
Hexachlorobutadiene	ND	1.0	"	"	"	"	"	"	
Isopropylbenzene	ND	1.0	"	"	"	"	"	"	
p-Isopropyltoluene	ND	1.0	"	"	"	"	"	"	
Methylene chloride	ND	1.0	"	"	"	"	"	"	
Naphthalene	ND	1.0	"	"	"	"	"	"	
n-Propylbenzene	ND	1.0	"	"	"	"	"	"	
Styrene	ND	1.0	"	"	"	"	"	"	
1,1,2,2-Tetrachloroethane	ND	1.0	"	"	"	"	"	"	
1,1,1,2-Tetrachloroethane	ND	1.0	"	"	"	"	"	"	
Tetrachloroethene	ND	1.0	"	"	"	"	"	"	
1,2,3-Trichlorobenzene	ND	1.0	"	"	"	"	"	"	
1,2,4-Trichlorobenzene	ND	1.0	"	"	"	"	"	"	
1,1,2-Trichloroethane	ND	1.0	"	"	"	"	"	"	
1,1,1-Trichloroethane	ND	1.0	"	"	"	"	"	"	
Trichloroethene	ND	1.0	"	"	"	"	"	"	
Trichlorofluoromethane	ND	1.0	"	"	"	"	"	"	
1,2,3-Trichloropropane	ND	1.0	"	"	"	"	"	"	
1,3,5-Trimethylbenzene	ND	1.0	"	"	"	"	"	"	
1,2,4-Trimethylbenzene	ND	1.0	"	"	"	"	"	"	
Vinyl chloride	ND	1.0	"	"	"	"	"	"	
Benzene	ND	0.50	"	"	"	"	"	"	
Toluene	ND	0.50	"	"	"	"	"	"	
Ethylbenzene	ND	0.50	"	"	"	"	"	"	
m,p-Xylene	ND	1.0	"	"	"	"	"	"	
o-Xylene	ND	0.50	"	"	"	"	"	"	
Tert-amyl methyl ether	ND	2.0	"	"	"	"	"	"	

SunStar Laboratories, Inc.

Daniel J Chavez

Daniel Chavez, Project Manager

The results in this report apply to the samples analyzed in accordance with the chain of custody document. This analytical report must be reproduced in its entirety.

SunStar Laboratories, Inc.
Providing Quality Analytical Services Nationwide

25712 Commercentre Drive
Lake Forest, California 92630
949.297.5020 Phone
949.297.5027 Fax

Murex	Project: Cenco	
2640 Walnut Ave. Unit F	Project Number: 1003-001-300	**Reported:**
Tustin CA, 92780	Project Manager: Jeremy Squire	02/08/11 16:45

LL_W14A_013111

T110093-01 (Water)

Analyte	Result	Reporting Limit	Units	Dilution	Batch	Prepared	Analyzed	Method	Notes
SunStar Laboratories, Inc.									
Volatile Organic Compounds by EPA Method 8260B									
Tert-butyl alcohol	ND	10	ug/l	1	1020104	02/01/11	02/04/11	EPA 8260B	
Di-isopropyl ether	ND	2.0	"	"	"	"	"	"	
Ethyl tert-butyl ether	ND	2.0	"	"	"	"	"	"	
Methyl tert-butyl ether	ND	1.0	"	"	"	"	"	"	
1,1,2-trichloro-1,2,2-trifluoroethane (CFC 113)	ND	5.0	"	"	"	"	"	"	
Surrogate 4-Bromofluorobenzene		*89.0 %*	*77.1-110*		"	"	"	"	
Surrogate Dibromofluoromethane		*98.9 %*	*66.3-111*		"	"	"	"	
Surrogate Toluene-d8		*114 %*	*84.7-109*		"	"	"	"	*S-GC*

SunStar Laboratories, Inc.

The results in this report apply to the samples analyzed in accordance with the chain of custody document. This analytical report must be reproduced in its entirety.

Daniel Chavez, Project Manager

SunStar Laboratories, Inc.
Providing Quality Analytical Services Nationwide

25712 Commercentre Drive
Lake Forest, California 92630
949.297.5020 Phone
949.297.5027 Fax

Murex	Project: Cenco	
2640 Walnut Ave. Unit F	Project Number: 1003-001-300	**Reported:**
Tustin CA, 92780	Project Manager: Jeremy Squire	02/08/11 16:45

LL_W14B_013111

T110093-02 (Water)

Analyte	Result	Reporting Limit	Units	Dilution	Batch	Prepared	Analyzed	Method	Notes
SunStar Laboratories, Inc.									
Purgeable Petroleum Hydrocarbons by EPA 8015C									
C6-C12 (GRO)	**65**	50	ug/l	1	1020105	02/01/11	02/02/11	EPA 8015C	
Surrogate 4-Bromofluorobenzene		*73.2 %*	*72.6-146*		"	"	"	"	
Volatile Organic Compounds by EPA Method 8260B									
Bromobenzene	ND	1.0	ug/l	1	1020104	02/01/11	02/04/11	EPA 8260B	
Bromochloromethane	ND	1.0	"	"	"	"	"	"	
Bromodichloromethane	ND	1.0	"	"	"	"	"	"	
Bromoform	ND	1.0	"	"	"	"	"	"	
Bromomethane	ND	1.0	"	"	"	"	"	"	
n-Butylbenzene	ND	1.0	"	"	"	"	"	"	
sec-Butylbenzene	ND	1.0	"	"	"	"	"	"	
tert-Butylbenzene	ND	1.0	"	"	"	"	"	"	
Carbon tetrachloride	ND	0.50	"	"	"	"	"	"	
Chlorobenzene	ND	1.0	"	"	"	"	"	"	
Chloroethane	ND	1.0	"	"	"	"	"	"	
Chloroform	ND	1.0	"	"	"	"	"	"	
Chloromethane	ND	1.0	"	"	"	"	"	"	
2-Chlorotoluene	ND	1.0	"	"	"	"	"	"	
4-Chlorotoluene	ND	1.0	"	"	"	"	"	"	
Dibromochloromethane	ND	1.0	"	"	"	"	"	"	
1,2-Dibromo-3-chloropropane	ND	1.0	"	"	"	"	"	"	
1,2-Dibromoethane (EDB)	ND	1.0	"	"	"	"	"	"	
Dibromomethane	ND	1.0	"	"	"	"	"	"	
1,2-Dichlorobenzene	ND	1.0	"	"	"	"	"	"	
1,3-Dichlorobenzene	ND	1.0	"	"	"	"	"	"	
1,4-Dichlorobenzene	ND	1.0	"	"	"	"	"	"	
Dichlorodifluoromethane	ND	0.50	"	"	"	"	"	"	
1,1-Dichloroethane	ND	1.0	"	"	"	"	"	"	
1,2-Dichloroethane	ND	0.50	"	"	"	"	"	"	
1,1-Dichloroethene	**3.1**	1.0	"	"	"	"	"	"	
cis-1,2-Dichloroethene	**2.0**	1.0	"	"	"	"	"	"	
trans-1,2-Dichloroethene	ND	1.0	"	"	"	"	"	"	
1,2-Dichloropropane	ND	1.0	"	"	"	"	"	"	

SunStar Laboratories, Inc.

Daniel J Chavez

Daniel Chavez, Project Manager

The results in this report apply to the samples analyzed in accordance with the chain of custody document. This analytical report must be reproduced in its entirety.

SunStar Laboratories, Inc.
Providing Quality Analytical Services Nationwide

25712 Commercentre Drive
Lake Forest, California 92630
949.297.5020 Phone
949.297.5027 Fax

Murex	Project: Cenco	
2640 Walnut Ave. Unit F	Project Number: 1003-001-300	**Reported:**
Tustin CA, 92780	Project Manager: Jeremy Squire	02/08/11 16:45

LL_W14B_013111

T110093-02 (Water)

SunStar Laboratories, Inc.

Volatile Organic Compounds by EPA Method 8260B

Analyte	Result	Reporting Limit	Units	Dilution	Batch	Prepared	Analyzed	Method	Notes
1,3-Dichloropropane	ND	1.0	ug/l	1	1020104	02/01/11	02/04/11	EPA 8260B	
2,2-Dichloropropane	ND	1.0	"	"	"	"	"	"	
1,1-Dichloropropene	ND	1.0	"	"	"	"	"	"	
cis-1,3-Dichloropropene	ND	0.50	"	"	"	"	"	"	
trans-1,3-Dichloropropene	ND	0.50	"	"	"	"	"	"	
Hexachlorobutadiene	ND	1.0	"	"	"	"	"	"	
Isopropylbenzene	ND	1.0	"	"	"	"	"	"	
p-Isopropyltoluene	ND	1.0	"	"	"	"	"	"	
Methylene chloride	ND	1.0	"	"	"	"	"	"	
Naphthalene	ND	1.0	"	"	"	"	"	"	
n-Propylbenzene	ND	1.0	"	"	"	"	"	"	
Styrene	ND	1.0	"	"	"	"	"	"	
1,1,2,2-Tetrachloroethane	ND	1.0	"	"	"	"	"	"	
1,1,1,2-Tetrachloroethane	ND	1.0	"	"	"	"	"	"	
Tetrachloroethene	ND	1.0	"	"	"	"	"	"	
1,2,3-Trichlorobenzene	ND	1.0	"	"	"	"	"	"	
1,2,4-Trichlorobenzene	ND	1.0	"	"	"	"	"	"	
1,1,2-Trichloroethane	ND	1.0	"	"	"	"	"	"	
1,1,1-Trichloroethane	ND	1.0	"	"	"	"	"	"	
Trichloroethene	**9.7**	1.0	"	"	"	"	"	"	
Trichlorofluoromethane	ND	1.0	"	"	"	"	"	"	
1,2,3-Trichloropropane	ND	1.0	"	"	"	"	"	"	
1,3,5-Trimethylbenzene	ND	1.0	"	"	"	"	"	"	
1,2,4-Trimethylbenzene	ND	1.0	"	"	"	"	"	"	
Vinyl chloride	ND	1.0	"	"	"	"	"	"	
Benzene	ND	0.50	"	"	"	"	"	"	
Toluene	ND	0.50	"	"	"	"	"	"	
Ethylbenzene	ND	0.50	"	"	"	"	"	"	
m,p-Xylene	ND	1.0	"	"	"	"	"	"	
o-Xylene	ND	0.50	"	"	"	"	"	"	
Tert-amyl methyl ether	ND	2.0	"	"	"	"	"	"	
Tert-butyl alcohol	ND	10	"	"	"	"	"	"	

SunStar Laboratories, Inc.

The results in this report apply to the samples analyzed in accordance with the chain of custody document. This analytical report must be reproduced in its entirety.

Daniel Chavez, Project Manager

SunStar Laboratories, Inc.
PROVIDING QUALITY ANALYTICAL SERVICES NATIONWIDE

25712 Commercentre Drive
Lake Forest, California 92630
949.297.5020 Phone
949.297.5027 Fax

Murex	Project: Cenco	
2640 Walnut Ave. Unit F	Project Number: 1003-001-300	**Reported:**
Tustin CA, 92780	Project Manager: Jeremy Squire	02/08/11 16:45

LL_W14B_013111

T110093-02 (Water)

Analyte	Result	Reporting Limit	Units	Dilution	Batch	Prepared	Analyzed	Method	Notes
SunStar Laboratories, Inc.									
Volatile Organic Compounds by EPA Method 8260B									
Di-isopropyl ether	ND	2.0	ug/l	1	1020104	02/01/11	02/04/11	EPA 8260B	
Ethyl tert-butyl ether	ND	2.0	"	"	"	"	"	"	
Methyl tert-butyl ether	ND	1.0	"	"	"	"	"	"	
1,1,2-trichloro-1,2,2-trifluoroethane (CFC 113)	ND	5.0	"	"	"	"	"	"	
Surrogate 4-Bromofluorobenzene		*92.4 %*	*77.1-110*		"	"	"	"	
Surrogate Dibromofluoromethane		*95.5 %*	*66.3-111*		"	"	"	"	
Surrogate Toluene-d8		*106 %*	*84.7-109*		"	"	"	"	

SunStar Laboratories, Inc.

The results in this report apply to the samples analyzed in accordance with the chain of custody document. This analytical report must be reproduced in its entirety.

Daniel Chavez, Project Manager

SunStar Laboratories, Inc.
Providing Quality Analytical Services Nationwide

25712 Commercentre Drive
Lake Forest, California 92630
949.297.5020 Phone
949.297.5027 Fax

Murex	Project: Cenco	
2640 Walnut Ave. Unit F	Project Number: 1003-001-300	**Reported:**
Tustin CA, 92780	Project Manager: Jeremy Squire	02/08/11 16:45

LL_W14C_013111

T110093-03 (Water)

Analyte	Result	Reporting Limit	Units	Dilution	Batch	Prepared	Analyzed	Method	Notes
SunStar Laboratories, Inc.									
Purgeable Petroleum Hydrocarbons by EPA 8015C									
C6-C12 (GRO)	**60**	50	ug/l	1	1020105	02/01/11	02/02/11	EPA 8015C	
Surrogate 4-Bromofluorobenzene		*75.9 %*	*72.6-146*		"	"	"	"	
Volatile Organic Compounds by EPA Method 8260B									
Bromobenzene	ND	1.0	ug/l	1	1020104	02/01/11	02/04/11	EPA 8260B	
Bromochloromethane	ND	1.0	"	"	"	"	"	"	
Bromodichloromethane	ND	1.0	"	"	"	"	"	"	
Bromoform	ND	1.0	"	"	"	"	"	"	
Bromomethane	ND	1.0	"	"	"	"	"	"	
n-Butylbenzene	ND	1.0	"	"	"	"	"	"	
sec-Butylbenzene	ND	1.0	"	"	"	"	"	"	
tert-Butylbenzene	ND	1.0	"	"	"	"	"	"	
Carbon tetrachloride	ND	0.50	"	"	"	"	"	"	
Chlorobenzene	ND	1.0	"	"	"	"	"	"	
Chloroethane	ND	1.0	"	"	"	"	"	"	
Chloroform	ND	1.0	"	"	"	"	"	"	
Chloromethane	ND	1.0	"	"	"	"	"	"	
2-Chlorotoluene	ND	1.0	"	"	"	"	"	"	
4-Chlorotoluene	ND	1.0	"	"	"	"	"	"	
Dibromochloromethane	ND	1.0	"	"	"	"	"	"	
1,2-Dibromo-3-chloropropane	ND	1.0	"	"	"	"	"	"	
1,2-Dibromoethane (EDB)	ND	1.0	"	"	"	"	"	"	
Dibromomethane	ND	1.0	"	"	"	"	"	"	
1,2-Dichlorobenzene	ND	1.0	"	"	"	"	"	"	
1,3-Dichlorobenzene	ND	1.0	"	"	"	"	"	"	
1,4-Dichlorobenzene	ND	1.0	"	"	"	"	"	"	
Dichlorodifluoromethane	ND	0.50	"	"	"	"	"	"	
1,1-Dichloroethane	ND	1.0	"	"	"	"	"	"	
1,2-Dichloroethane	ND	0.50	"	"	"	"	"	"	
1,1-Dichloroethene	**3.0**	1.0	"	"	"	"	"	"	
cis-1,2-Dichloroethene	**9.9**	1.0	"	"	"	"	"	"	
trans-1,2-Dichloroethene	**1.1**	1.0	"	"	"	"	"	"	
1,2-Dichloropropane	ND	1.0	"	"	"	"	"	"	

SunStar Laboratories, Inc.

Daniel J Chavez

Daniel Chavez, Project Manager

The results in this report apply to the samples analyzed in accordance with the chain of custody document. This analytical report must be reproduced in its entirety.

SunStar Laboratories, Inc.
Providing Quality Analytical Services Nationwide

25712 Commercentre Drive
Lake Forest, California 92630
949.297.5020 Phone
949.297.5027 Fax

Murex	Project: Cenco	
2640 Walnut Ave. Unit F	Project Number: 1003-001-300	**Reported:**
Tustin CA, 92780	Project Manager: Jeremy Squire	02/08/11 16:45

LL_W14C_013111

T110093-03 (Water)

SunStar Laboratories, Inc.

Volatile Organic Compounds by EPA Method 8260B

Analyte	Result	Reporting Limit	Units	Dilution	Batch	Prepared	Analyzed	Method	Notes
1,3-Dichloropropane	ND	1.0	ug/l	1	1020104	02/01/11	02/04/11	EPA 8260B	
2,2-Dichloropropane	ND	1.0	"	"	"	"	"	"	
1,1-Dichloropropene	ND	1.0	"	"	"	"	"	"	
cis-1,3-Dichloropropene	ND	0.50	"	"	"	"	"	"	
trans-1,3-Dichloropropene	ND	0.50	"	"	"	"	"	"	
Hexachlorobutadiene	ND	1.0	"	"	"	"	"	"	
Isopropylbenzene	ND	1.0	"	"	"	"	"	"	
p-Isopropyltoluene	ND	1.0	"	"	"	"	"	"	
Methylene chloride	ND	1.0	"	"	"	"	"	"	
Naphthalene	ND	1.0	"	"	"	"	"	"	
n-Propylbenzene	ND	1.0	"	"	"	"	"	"	
Styrene	ND	1.0	"	"	"	"	"	"	
1,1,2,2-Tetrachloroethane	ND	1.0	"	"	"	"	"	"	
1,1,1,2-Tetrachloroethane	ND	1.0	"	"	"	"	"	"	
Tetrachloroethene	ND	1.0	"	"	"	"	"	"	
1,2,3-Trichlorobenzene	ND	1.0	"	"	"	"	"	"	
1,2,4-Trichlorobenzene	ND	1.0	"	"	"	"	"	"	
1,1,2-Trichloroethane	ND	1.0	"	"	"	"	"	"	
1,1,1-Trichloroethane	ND	1.0	"	"	"	"	"	"	
Trichloroethene	**3.8**	1.0	"	"	"	"	"	"	
Trichlorofluoromethane	ND	1.0	"	"	"	"	"	"	
1,2,3-Trichloropropane	ND	1.0	"	"	"	"	"	"	
1,3,5-Trimethylbenzene	ND	1.0	"	"	"	"	"	"	
1,2,4-Trimethylbenzene	ND	1.0	"	"	"	"	"	"	
Vinyl chloride	ND	1.0	"	"	"	"	"	"	
Benzene	ND	0.50	"	"	"	"	"	"	
Toluene	ND	0.50	"	"	"	"	"	"	
Ethylbenzene	ND	0.50	"	"	"	"	"	"	
m,p-Xylene	ND	1.0	"	"	"	"	"	"	
o-Xylene	ND	0.50	"	"	"	"	"	"	
Tert-amyl methyl ether	ND	2.0	"	"	"	"	"	"	
Tert-butyl alcohol	ND	10	"	"	"	"	"	"	

SunStar Laboratories, Inc.

The results in this report apply to the samples analyzed in accordance with the chain of custody document. This analytical report must be reproduced in its entirety.

Daniel Chavez, Project Manager

SunStar Laboratories, Inc.
PROVIDING QUALITY ANALYTICAL SERVICES NATIONWIDE

25712 Commercentre Drive
Lake Forest, California 92630
949.297.5020 Phone
949.297.5027 Fax

Murex	Project: Cenco	
2640 Walnut Ave. Unit F	Project Number: 1003-001-300	**Reported:**
Tustin CA, 92780	Project Manager: Jeremy Squire	02/08/11 16:45

LL_W14C_013111

T110093-03 (Water)

Analyte	Result	Reporting Limit	Units	Dilution	Batch	Prepared	Analyzed	Method	Notes
SunStar Laboratories, Inc.									
Volatile Organic Compounds by EPA Method 8260B									
Di-isopropyl ether	ND	2.0	ug/l	1	1020104	02/01/11	02/04/11	EPA 8260B	
Ethyl tert-butyl ether	ND	2.0	"	"	"	"	"	"	
Methyl tert-butyl ether	ND	1.0	"	"	"	"	"	"	
1,1,2-trichloro-1,2,2-trifluoroethane (CFC 113)	ND	5.0	"	"	"	"	"	"	
Surrogate 4-Bromofluorobenzene		*93.1 %*		*77.1-110*	"	"	"	"	
Surrogate Dibromofluoromethane		*105 %*		*66.3-111*	"	"	"	"	
Surrogate Toluene-d8		*109 %*		*84.7-109*	"	"	"	"	

SunStar Laboratories, Inc.

The results in this report apply to the samples analyzed in accordance with the chain of custody document. This analytical report must be reproduced in its entirety.

Daniel Chavez, Project Manager

SunStar Laboratories, Inc.
Providing Quality Analytical Services Nationwide

25712 Commercentre Drive
Lake Forest, California 92630
949.297.5020 Phone
949.297.5027 Fax

Murex	Project: Cenco	
2640 Walnut Ave. Unit F	Project Number: 1003-001-300	**Reported:**
Tustin CA, 92780	Project Manager: Jeremy Squire	02/08/11 16:45

TB_013111

T110093-04 (Water)

Analyte	Result	Reporting Limit	Units	Dilution	Batch	Prepared	Analyzed	Method	Notes
SunStar Laboratories, Inc.									
Volatile Organic Compounds by EPA Method 8260B									
Bromobenzene	ND	1.0	ug/l	1	1020104	02/01/11	02/04/11	EPA 8260B	
Bromochloromethane	ND	1.0	"	"	"	"	"	"	
Bromodichloromethane	ND	1.0	"	"	"	"	"	"	
Bromoform	ND	1.0	"	"	"	"	"	"	
Bromomethane	ND	1.0	"	"	"	"	"	"	
n-Butylbenzene	ND	1.0	"	"	"	"	"	"	
sec-Butylbenzene	ND	1.0	"	"	"	"	"	"	
tert-Butylbenzene	ND	1.0	"	"	"	"	"	"	
Carbon tetrachloride	ND	0.50	"	"	"	"	"	"	
Chlorobenzene	ND	1.0	"	"	"	"	"	"	
Chloroethane	ND	1.0	"	"	"	"	"	"	
Chloroform	ND	1.0	"	"	"	"	"	"	
Chloromethane	ND	1.0	"	"	"	"	"	"	
2-Chlorotoluene	ND	1.0	"	"	"	"	"	"	
4-Chlorotoluene	ND	1.0	"	"	"	"	"	"	
Dibromochloromethane	ND	1.0	"	"	"	"	"	"	
1,2-Dibromo-3-chloropropane	ND	1.0	"	"	"	"	"	"	
1,2-Dibromoethane (EDB)	ND	1.0	"	"	"	"	"	"	
Dibromomethane	ND	1.0	"	"	"	"	"	"	
1,2-Dichlorobenzene	ND	1.0	"	"	"	"	"	"	
1,3-Dichlorobenzene	ND	1.0	"	"	"	"	"	"	
1,4-Dichlorobenzene	ND	1.0	"	"	"	"	"	"	
Dichlorodifluoromethane	ND	0.50	"	"	"	"	"	"	
1,1-Dichloroethane	ND	1.0	"	"	"	"	"	"	
1,2-Dichloroethane	ND	0.50	"	"	"	"	"	"	
1,1-Dichloroethene	ND	1.0	"	"	"	"	"	"	
cis-1,2-Dichloroethene	ND	1.0	"	"	"	"	"	"	
trans-1,2-Dichloroethene	ND	1.0	"	"	"	"	"	"	
1,2-Dichloropropane	ND	1.0	"	"	"	"	"	"	
1,3-Dichloropropane	ND	1.0	"	"	"	"	"	"	
2,2-Dichloropropane	ND	1.0	"	"	"	"	"	"	
1,1-Dichloropropene	ND	1.0	"	"	"	"	"	"	

SunStar Laboratories, Inc.

The results in this report apply to the samples analyzed in accordance with the chain of custody document. This analytical report must be reproduced in its entirety.

Daniel Chavez, Project Manager

SunStar Laboratories, Inc.
Providing Quality Analytical Services Nationwide

25712 Commercentre Drive
Lake Forest, California 92630
949.297.5020 Phone
949.297.5027 Fax

Murex	Project: Cenco	
2640 Walnut Ave. Unit F	Project Number: 1003-001-300	**Reported:**
Tustin CA, 92780	Project Manager: Jeremy Squire	02/08/11 16:45

TB_013111

T110093-04 (Water)

Analyte	Result	Reporting Limit	Units	Dilution	Batch	Prepared	Analyzed	Method	Notes
SunStar Laboratories, Inc.									
Volatile Organic Compounds by EPA Method 8260B									
cis-1,3-Dichloropropene	ND	0.50	ug/l	1	1020104	02/01/11	02/04/11	EPA 8260B	
trans-1,3-Dichloropropene	ND	0.50	"	"	"	"	"	"	
Hexachlorobutadiene	ND	1.0	"	"	"	"	"	"	
Isopropylbenzene	ND	1.0	"	"	"	"	"	"	
p-Isopropyltoluene	ND	1.0	"	"	"	"	"	"	
Methylene chloride	ND	1.0	"	"	"	"	"	"	
Naphthalene	ND	1.0	"	"	"	"	"	"	
n-Propylbenzene	ND	1.0	"	"	"	"	"	"	
Styrene	ND	1.0	"	"	"	"	"	"	
1,1,2,2-Tetrachloroethane	ND	1.0	"	"	"	"	"	"	
1,1,1,2-Tetrachloroethane	ND	1.0	"	"	"	"	"	"	
Tetrachloroethene	ND	1.0	"	"	"	"	"	"	
1,2,3-Trichlorobenzene	ND	1.0	"	"	"	"	"	"	
1,2,4-Trichlorobenzene	ND	1.0	"	"	"	"	"	"	
1,1,2-Trichloroethane	ND	1.0	"	"	"	"	"	"	
1,1,1-Trichloroethane	ND	1.0	"	"	"	"	"	"	
Trichloroethene	ND	1.0	"	"	"	"	"	"	
Trichlorofluoromethane	ND	1.0	"	"	"	"	"	"	
1,2,3-Trichloropropane	ND	1.0	"	"	"	"	"	"	
1,3,5-Trimethylbenzene	ND	1.0	"	"	"	"	"	"	
1,2,4-Trimethylbenzene	ND	1.0	"	"	"	"	"	"	
Vinyl chloride	ND	1.0	"	"	"	"	"	"	
Benzene	ND	0.50	"	"	"	"	"	"	
Toluene	ND	0.50	"	"	"	"	"	"	
Ethylbenzene	ND	0.50	"	"	"	"	"	"	
m,p-Xylene	ND	1.0	"	"	"	"	"	"	
o-Xylene	ND	0.50	"	"	"	"	"	"	
Tert-amyl methyl ether	ND	2.0	"	"	"	"	"	"	
Tert-butyl alcohol	ND	10	"	"	"	"	"	"	
Di-isopropyl ether	ND	2.0	"	"	"	"	"	"	
Ethyl tert-butyl ether	ND	2.0	"	"	"	"	"	"	
Methyl tert-butyl ether	ND	1.0	"	"	"	"	"	"	

SunStar Laboratories, Inc.

The results in this report apply to the samples analyzed in accordance with the chain of custody document. This analytical report must be reproduced in its entirety.

Daniel Chavez, Project Manager

SunStar Laboratories, Inc.
PROVIDING QUALITY ANALYTICAL SERVICES NATIONWIDE

25712 Commercentre Drive
Lake Forest, California 92630
949.297.5020 Phone
949.297.5027 Fax

Murex	Project: Cenco	
2640 Walnut Ave. Unit F	Project Number: 1003-001-300	**Reported:**
Tustin CA, 92780	Project Manager: Jeremy Squire	02/08/11 16:45

TB_013111

T110093-04 (Water)

Analyte	Result	Reporting Limit	Units	Dilution	Batch	Prepared	Analyzed	Method	Notes
SunStar Laboratories, Inc.									
Volatile Organic Compounds by EPA Method 8260B									
1,1,2-trichloro-1,2,2-trifluoroethane (CFC 113)	ND	5.0	ug/l	1	1020104	02/01/11	02/04/11	EPA 8260B	
Surrogate 4-Bromofluorobenzene		*81.6 %*	*77.1-110*		"	"	"	"	
Surrogate Dibromofluoromethane		*98.6 %*	*66.3-111*		"	"	"	"	
Surrogate Toluene-d8		*105 %*	*84.7-109*		"	"	"	"	

SunStar Laboratories, Inc.

The results in this report apply to the samples analyzed in accordance with the chain of custody document. This analytical report must be reproduced in its entirety.

Daniel Chavez, Project Manager

SunStar Laboratories, Inc.
Providing Quality Analytical Services Nationwide

25712 Commercentre Drive
Lake Forest, California 92630
949.297.5020 Phone
949.297.5027 Fax

Murex	Project: Cenco	
2640 Walnut Ave. Unit F	Project Number: 1003-001-300	**Reported:**
Tustin CA, 92780	Project Manager: Jeremy Squire	02/08/11 16:45

Purgeable Petroleum Hydrocarbons by EPA 8015C - Quality Control

SunStar Laboratories, Inc.

Analyte	Result	Reporting Limit	Units	Spike Level	Source Result	%REC	%REC Limits	RPD	RPD Limit	Notes
Batch 1020105 - EPA 5030 GC										
Blank (1020105-BLK1)				Prepared: 02/01/11		Analyzed: 02/02/11				
C6-C12 (GRO)	ND	50	ug/l							
Surrogate 4-Bromofluorobenzene	*189*		*"*	*200*		*94.5*	*72.6-146*			
LCS (1020105-BS1)				Prepared: 02/01/11		Analyzed: 02/02/11				
C6-C12 (GRO)	4510	50	ug/l	5500		82.0	75-125			
Surrogate 4-Bromofluorobenzene	*184*		*"*	*200*		*91.8*	*72.6-146*			
Matrix Spike (1020105-MS1)		**Source: T110093-01**		Prepared: 02/01/11		Analyzed: 02/02/11				
C6-C12 (GRO)	5010	50	ug/l	5500	35.0	90.5	65-135			
Surrogate 4-Bromofluorobenzene	*146*		*"*	*200*		*73.2*	*72.6-146*			
Matrix Spike Dup (1020105-MSD1)		**Source: T110093-01**		Prepared: 02/01/11		Analyzed: 02/02/11				
C6-C12 (GRO)	4850	50	ug/l	5500	35.0	87.5	65-135	3.39	20	
Surrogate 4-Bromofluorobenzene	*169*		*"*	*200*		*84.7*	*72.6-146*			

SunStar Laboratories, Inc.

The results in this report apply to the samples analyzed in accordance with the chain of custody document. This analytical report must be reproduced in its entirety.

Daniel Chavez, Project Manager

SunStar Laboratories, Inc.
Providing Quality Analytical Services Nationwide

25712 Commercentre Drive
Lake Forest, California 92630
949.297.5020 Phone
949.297.5027 Fax

Murex	Project: Cenco	
2640 Walnut Ave. Unit F	Project Number: 1003-001-300	**Reported:**
Tustin CA, 92780	Project Manager: Jeremy Squire	02/08/11 16:45

Volatile Organic Compounds by EPA Method 8260B - Quality Control

SunStar Laboratories, Inc.

Analyte	Result	Reporting Limit	Units	Spike Level	Source Result	%REC	%REC Limits	RPD	RPD Limit	Notes
Batch 1020104 - EPA 5030 GCMS										
Blank (1020104-BLK1)				Prepared: 02/01/11 Analyzed: 02/04/11						
Bromobenzene	ND	1.0	ug/l							
Bromochloromethane	ND	1.0	"							
Bromodichloromethane	ND	1.0	"							
Bromoform	ND	1.0	"							
Bromomethane	ND	1.0	"							
n-Butylbenzene	ND	1.0	"							
sec-Butylbenzene	ND	1.0	"							
tert-Butylbenzene	ND	1.0	"							
Carbon tetrachloride	ND	0.50	"							
Chlorobenzene	ND	1.0	"							
Chloroethane	ND	1.0	"							
Chloroform	ND	1.0	"							
Chloromethane	ND	1.0	"							
2-Chlorotoluene	ND	1.0	"							
4-Chlorotoluene	ND	1.0	"							
Dibromochloromethane	ND	1.0	"							
1,2-Dibromo-3-chloropropane	ND	1.0	"							
1,2-Dibromoethane (EDB)	ND	1.0	"							
Dibromomethane	ND	1.0	"							
1,2-Dichlorobenzene	ND	1.0	"							
1,3-Dichlorobenzene	ND	1.0	"							
1,4-Dichlorobenzene	ND	1.0	"							
Dichlorodifluoromethane	ND	0.50	"							
1,1-Dichloroethane	ND	1.0	"							
1,2-Dichloroethane	ND	0.50	"							
1,1-Dichloroethene	ND	1.0	"							
cis-1,2-Dichloroethene	ND	1.0	"							
trans-1,2-Dichloroethene	ND	1.0	"							
1,2-Dichloropropane	ND	1.0	"							
1,3-Dichloropropane	ND	1.0	"							
2,2-Dichloropropane	ND	1.0	"							
1,1-Dichloropropene	ND	1.0	"							
cis-1,3-Dichloropropene	ND	0.50	"							
trans-1,3-Dichloropropene	ND	0.50	"							
Hexachlorobutadiene	ND	1.0	"							
Isopropylbenzene	ND	1.0	"							

SunStar Laboratories, Inc.

The results in this report apply to the samples analyzed in accordance with the chain of custody document. This analytical report must be reproduced in its entirety.

Daniel Chavez, Project Manager

SunStar Laboratories, Inc.
Providing Quality Analytical Services Nationwide

25712 Commercentre Drive
Lake Forest, California 92630
949.297.5020 Phone
949.297.5027 Fax

Murex	Project: Cenco	
2640 Walnut Ave. Unit F	Project Number: 1003-001-300	**Reported:**
Tustin CA, 92780	Project Manager: Jeremy Squire	02/08/11 16:45

Volatile Organic Compounds by EPA Method 8260B - Quality Control

SunStar Laboratories, Inc.

Analyte	Result	Reporting Limit	Units	Spike Level	Source Result	%REC	%REC Limits	RPD	RPD Limit	Notes
Batch 1020104 - EPA 5030 GCMS										
Blank (1020104-BLK1)				Prepared: 02/01/11 Analyzed: 02/04/11						
p-Isopropyltoluene	ND	1.0	ug/l							
Methylene chloride	ND	1.0	"							
Naphthalene	ND	1.0	"							
n-Propylbenzene	ND	1.0	"							
Styrene	ND	1.0	"							
1,1,2,2-Tetrachloroethane	ND	1.0	"							
1,1,1,2-Tetrachloroethane	ND	1.0	"							
Tetrachloroethene	ND	1.0	"							
1,2,3-Trichlorobenzene	ND	1.0	"							
1,2,4-Trichlorobenzene	ND	1.0	"							
1,1,2-Trichloroethane	ND	1.0	"							
1,1,1-Trichloroethane	ND	1.0	"							
Trichloroethene	ND	1.0	"							
Trichlorofluoromethane	ND	1.0	"							
1,2,3-Trichloropropane	ND	1.0	"							
1,3,5-Trimethylbenzene	ND	1.0	"							
1,2,4-Trimethylbenzene	ND	1.0	"							
Vinyl chloride	ND	1.0	"							
Benzene	ND	0.50	"							
Toluene	ND	0.50	"							
Ethylbenzene	ND	0.50	"							
m,p-Xylene	ND	1.0	"							
o-Xylene	ND	0.50	"							
Tert-amyl methyl ether	ND	2.0	"							
Tert-butyl alcohol	ND	10	"							
Di-isopropyl ether	ND	2.0	"							
Ethyl tert-butyl ether	ND	2.0	"							
Methyl tert-butyl ether	ND	1.0	"							
1,1,2-trichloro-1,2,2-trifluoroethane (CFC 113)	ND	5.0	"							
Surrogate 4-Bromofluorobenzene	*6.53*		*"*	*8.00*		*81.6*	*77.1-110*			
Surrogate Dibromofluoromethane	*7.75*		*"*	*8.00*		*96.9*	*66.3-111*			
Surrogate Toluene-d8	*8.20*		*"*	*8.00*		*102*	*84.7-109*			

SunStar Laboratories, Inc.

The results in this report apply to the samples analyzed in accordance with the chain of custody document. This analytical report must be reproduced in its entirety.

Daniel Chavez, Project Manager

SunStar Laboratories, Inc.
Providing Quality Analytical Services Nationwide

25712 Commercentre Drive
Lake Forest, California 92630
949.297.5020 Phone
949.297.5027 Fax

Murex	Project: Cenco	
2640 Walnut Ave. Unit F	Project Number: 1003-001-300	**Reported:**
Tustin CA, 92780	Project Manager: Jeremy Squire	02/08/11 16:45

Volatile Organic Compounds by EPA Method 8260B - Quality Control

SunStar Laboratories, Inc.

Analyte	Result	Reporting Limit	Units	Spike Level	Source Result	%REC	%REC Limits	RPD	RPD Limit	Notes
Batch 1020104 - EPA 5030 GCMS										
LCS (1020104-BS1)				Prepared: 02/01/11	Analyzed: 02/04/11					
Chlorobenzene	18 1	1.0	ug/l	20.0		90.6	75-125			
1,1-Dichloroethene	22.4	1.0	"	20.0		112	75-125			
Trichloroethene	17 3	1.0	"	20.0		86.6	75-125			
Benzene	17.0	0.50	"	20.0		85.0	75-125			
Toluene	18 5	0.50	"	20.0		92.6	75-125			
Surrogate 4-Bromofluorobenzene	*7.74*		*"*	*8.00*		*96.8*	*77.1-110*			
Surrogate Dibromofluoromethane	*5.88*		*"*	*8.00*		*73.5*	*66.3-111*			
Surrogate Toluene-d8	*8.47*		*"*	*8.00*		*106*	*84.7-109*			
LCS Dup (1020104-BSD1)				Prepared: 02/01/11	Analyzed: 02/04/11					
Chlorobenzene	17.0	1.0	ug/l	20.0		85.0	75-125	6.37	20	
1,1-Dichloroethene	21 3	1.0	"	20.0		106	75-125	5.04	20	
Trichloroethene	16.4	1.0	"	20.0		82.2	75-125	5.16	20	
Benzene	15 2	0.50	"	20.0		76.0	75-125	11.2	20	
Toluene	16 2	0.50	"	20.0		81.1	75-125	13.2	20	
Surrogate 4-Bromofluorobenzene	*7.56*		*"*	*8.00*		*94.5*	*77.1-110*			
Surrogate Dibromofluoromethane	*5.27*		*"*	*8.00*		*65.9*	*66.3-111*			*S-GC*
Surrogate Toluene-d8	*8.13*		*"*	*8.00*		*102*	*84.7-109*			

SunStar Laboratories, Inc.

The results in this report apply to the samples analyzed in accordance with the chain of custody document. This analytical report must be reproduced in its entirety.

Daniel Chavez, Project Manager

SunStar Laboratories, Inc.
PROVIDING QUALITY ANALYTICAL SERVICES NATIONWIDE

25712 Commercentre Drive
Lake Forest, California 92630
949.297.5020 Phone
949.297.5027 Fax

Murex	Project: Cenco	
2640 Walnut Ave. Unit F	Project Number: 1003-001-300	**Reported:**
Tustin CA, 92780	Project Manager: Jeremy Squire	02/08/11 16:45

Notes and Definitions

S-GC	Surrogate recovery outside of established control limits. The data was accepted based on valid recovery of the remaining surrogate(s).
DET	Analyte DETECTED
ND	Analyte NOT DETECTED at or above the reporting limit
NR	Not Reported
dry	Sample results reported on a dry weight basis
RPD	Relative Percent Difference

SunStar Laboratories, Inc.

Daniel J Chávez

Daniel Chavez, Project Manager

The results in this report apply to the samples analyzed in accordance with the chain of custody document. This analytical report must be reproduced in its entirety.

SunStar Laboratories, Inc.
25712 Commercentre Dr
Lake Forest, CA 92630
949-297-5020

Chain of Custody Record

Client: Murex Environmental, Inc.
Address: 2640 Walnut Ave, Unit F
Phone: (714) 508-0800 Fax: (714) 508-0880
Project Manager: Jeremy Squire (714) 604-5836

Date: 1.31.2011 Page: 1 Of 1
Project Name: CENCO
Collector: F. Sosic Client Project #: 1003-001-300
Batch #: T110093 EDF #:

Sample ID	Date Sampled	Time	Sample Type	8260 (VOCs NO OXY)	8260 + OXY	1,4-Dioxane	8270 Semi-Volatiles (PAHs, etc)	8021 BTEX	8015M (TPH gasoline)	8015M (TPH diesel)	Hexavalent Chromium (7199)	6010/7000 Title 22 Metals	PCBs				Total # of containers	Comments/Preservative	Laboratory ID #
LC_W14A_013111	1.31.2011	0845	GW		X				X								6		01
LC_W14B_013111	↓	1130	GW		X				X								6		02
LC_W14C_013111	↓	1600	GW		X				X								6		03
TB_013111			Water		X												2		04

Relinquished by: (signature)	Date / Time	Received by: (signat	Date / Time
[signature]	1.31.2011 16:31	[signature]	1/31/11 1631
Relinquished by: (signature)	Date / Time	Received by: (signat	Date / Time
Relinquished by: (signature)	Date / Time	Received by: (signat	Date / Time

Total # of containers	20
Chain of Custody seals	N
Seals intact? Y/N/NA	N/A
Received good condition/cold	Y 5.4°
Turn around time:	

Notes

Sample disposal Instructions: Disposal @ $2.00 each ____ Return to client ____ Pickup ____

SunStar Laboratories, Inc.
PROVIDING QUALITY ANALYTICAL SERVICES NATIONWIDE

SAMPLE RECEIVING REVIEW SHEET

BATCH # T110093

Client Name: MUREX

Project: CENCO

Received by: DAN

Date/Time Received: 2/31/11 1631

Delivered by : ☐ Client ☒ SunStar Courier ☐ GSO ☐ FedEx ☐ Other

Total number of coolers received 0

Temp criteria = 6°C > 0°C (no frozen containers)

Temperature: cooler #1 5.6 °C +/- the CF (- 0.2°C) = 5.4 °C corrected temperature

cooler #2 _____ °C +/- the CF (- 0.2°C) = _____ °C corrected temperature

cooler #3 _____ °C +/- the CF (- 0.2°C) = _____ °C corrected temperature

Samples outside temp. but received on ice, w/in 6 hours of final sampling.	☒ Yes	☐ No*	☐ N/A
Custody Seals Intact on Cooler/Sample	☐ Yes	☐ No*	☒ N/A
Sample Containers Intact	☒ Yes	☐ No*	
Sample labels match COC ID's	☒ Yes	☐ No*	
Total number of containers received match COC	☒ Yes	☐ No*	
Proper containers received for analyses requested on COC	☒ Yes	☐ No*	
Proper preservative indicated on COC/containers for analyses requested	☒ Yes	☐ No*	☐ N/A

Complete shipment received in good condition with correct temperatures, containers, labels, volumes preservatives and within method specified holding times. ☒ **Yes** ☐ **No***

* Complete Non-Conformance Receiving Sheet if checked

Cooler/Sample Review - Initials and date BC 2/1/11

Comments:

SunStar Laboratories, Inc.
PROVIDING QUALITY ANALYTICAL SERVICES NATIONWIDE

25712 Commercentre Drive
Lake Forest, California 92630
949.297.5020 Phone
949.297.5027 Fax

08 February 2011

Jeremy Squire
Murex
2640 Walnut Ave. Unit F
Tustin, CA 92780

RE: Cenco

Enclosed are the results of analyses for samples received by the laboratory on 02/01/11 16:20. If you have any questions concerning this report, please feel free to contact me.

Sincerely,

Daniel Chavez
Project Manager

SunStar Laboratories, Inc.
PROVIDING QUALITY ANALYTICAL SERVICES NATIONWIDE

25712 Commercentre Drive
Lake Forest, California 92630
949.297.5020 Phone
949.297.5027 Fax

Murex	Project: Cenco	
2640 Walnut Ave. Unit F	Project Number: 1003-001-300	**Reported:**
Tustin CA, 92780	Project Manager: Jeremy Squire	02/08/11 16:47

ANALYTICAL REPORT FOR SAMPLES

Sample ID	Laboratory ID	Matrix	Date Sampled	Date Received
LL_W15A_02011	T110097-01	Water	02/01/11 08:45	02/01/11 16:20
LL_W15B_02011	T110097-02	Water	02/01/11 10:50	02/01/11 16:20
LL_W15C_02011	T110097-03	Water	02/01/11 14:20	02/01/11 16:20
TB_020111	T110097-04	Water	02/01/11 00:00	02/01/11 16:20

SunStar Laboratories, Inc.

The results in this report apply to the samples analyzed in accordance with the chain of custody document. This analytical report must be reproduced in its entirety.

Daniel Chavez, Project Manager

SunStar Laboratories, Inc.
Providing Quality Analytical Services Nationwide

25712 Commercentre Drive
Lake Forest, California 92630
949.297.5020 Phone
949.297.5027 Fax

Murex	Project: Cenco	
2640 Walnut Ave. Unit F	Project Number: 1003-001-300	**Reported:**
Tustin CA, 92780	Project Manager: Jeremy Squire	02/08/11 16:47

LL_W15A_02011

T110097-01 (Water)

Analyte	Result	Reporting Limit	Units	Dilution	Batch	Prepared	Analyzed	Method	Notes
SunStar Laboratories, Inc.									
Purgeable Petroleum Hydrocarbons by EPA 8015C									
C6-C12 (GRO)	**14000**	50	ug/l	1	1020217	02/02/11	02/07/11	EPA 8015C	
Surrogate 4-Bromofluorobenzene		*88.0 %*	*72.6-146*		"	"	"	"	
Volatile Organic Compounds by EPA Method 8260B									
Bromobenzene	ND	1.0	ug/l	1	1020104	02/01/11	02/04/11	EPA 8260B	
Bromochloromethane	ND	1.0	"	"	"	"	"	"	
Bromodichloromethane	ND	1.0	"	"	"	"	"	"	
Bromoform	ND	1.0	"	"	"	"	"	"	
Bromomethane	ND	1.0	"	"	"	"	"	"	
n-Butylbenzene	ND	1.0	"	"	"	"	"	"	
sec-Butylbenzene	ND	1.0	"	"	"	"	"	"	
tert-Butylbenzene	**46**	1.0	"	"	"	"	"	"	
Carbon tetrachloride	ND	0.50	"	"	"	"	"	"	
Chlorobenzene	ND	1.0	"	"	"	"	"	"	
Chloroethane	ND	1.0	"	"	"	"	"	"	
Chloroform	**1.1**	1.0	"	"	"	"	"	"	
Chloromethane	ND	1.0	"	"	"	"	"	"	
2-Chlorotoluene	ND	1.0	"	"	"	"	"	"	
4-Chlorotoluene	ND	1.0	"	"	"	"	"	"	
Dibromochloromethane	ND	1.0	"	"	"	"	"	"	
1,2-Dibromo-3-chloropropane	ND	1.0	"	"	"	"	"	"	
1,2-Dibromoethane (EDB)	ND	1.0	"	"	"	"	"	"	
Dibromomethane	ND	1.0	"	"	"	"	"	"	
1,2-Dichlorobenzene	ND	1.0	"	"	"	"	"	"	
1,3-Dichlorobenzene	ND	1.0	"	"	"	"	"	"	
1,4-Dichlorobenzene	ND	1.0	"	"	"	"	"	"	
Dichlorodifluoromethane	ND	0.50	"	"	"	"	"	"	
1,1-Dichloroethane	ND	1.0	"	"	"	"	"	"	
1,2-Dichloroethane	**1.6**	0.50	"	"	"	"	"	"	
1,1-Dichloroethene	ND	1.0	"	"	"	"	"	"	
cis-1,2-Dichloroethene	ND	1.0	"	"	"	"	"	"	
trans-1,2-Dichloroethene	ND	1.0	"	"	"	"	"	"	

SunStar Laboratories, Inc.

The results in this report apply to the samples analyzed in accordance with the chain of custody document. This analytical report must be reproduced in its entirety.

Daniel Chavez, Project Manager

SunStar Laboratories, Inc.
Providing Quality Analytical Services Nationwide

25712 Commercentre Drive
Lake Forest, California 92630
949.297.5020 Phone
949.297.5027 Fax

Murex	Project: Cenco	
2640 Walnut Ave. Unit F	Project Number: 1003-001-300	**Reported:**
Tustin CA, 92780	Project Manager: Jeremy Squire	02/08/11 16:47

LL_W15A_02011

T110097-01 (Water)

SunStar Laboratories, Inc.

Volatile Organic Compounds by EPA Method 8260B

Analyte	Result	Reporting Limit	Units	Dilution	Batch	Prepared	Analyzed	Method	Notes
1,2-Dichloropropane	ND	1.0	ug/l	1	1020104	02/01/11	02/04/11	EPA 8260B	
1,3-Dichloropropane	ND	1.0	"	"	"	"	"	"	
2,2-Dichloropropane	ND	1.0	"	"	"	"	"	"	
1,1-Dichloropropene	ND	1.0	"	"	"	"	"	"	
cis-1,3-Dichloropropene	ND	0.50	"	"	"	"	"	"	
trans-1,3-Dichloropropene	ND	0.50	"	"	"	"	"	"	
Hexachlorobutadiene	ND	1.0	"	"	"	"	"	"	
Isopropylbenzene	**32**	1.0	"	"	"	"	"	"	
p-Isopropyltoluene	**8.7**	1.0	"	"	"	"	"	"	
Methylene chloride	ND	1.0	"	"	"	"	"	"	
Naphthalene	**64**	50	"	50	"	"	02/04/11	"	
n-Propylbenzene	**62**	1.0	"	1	"	"	02/04/11	"	
Styrene	ND	1.0	"	"	"	"	"	"	
1,1,2,2-Tetrachloroethane	ND	1.0	"	"	"	"	"	"	
1,1,1,2-Tetrachloroethane	ND	1.0	"	"	"	"	"	"	
Tetrachloroethene	ND	1.0	"	"	"	"	"	"	
1,2,3-Trichlorobenzene	ND	1.0	"	"	"	"	"	"	
1,2,4-Trichlorobenzene	ND	1.0	"	"	"	"	"	"	
1,1,2-Trichloroethane	ND	1.0	"	"	"	"	"	"	
1,1,1-Trichloroethane	ND	1.0	"	"	"	"	"	"	
Trichloroethene	ND	1.0	"	"	"	"	"	"	
Trichlorofluoromethane	ND	1.0	"	"	"	"	"	"	
1,2,3-Trichloropropane	ND	1.0	"	"	"	"	"	"	
1,3,5-Trimethylbenzene	**200**	50	"	50	"	"	02/04/11	"	
1,2,4-Trimethylbenzene	**490**	50	"	"	"	"	"	"	
Vinyl chloride	ND	1.0	"	1	"	"	02/04/11	"	
Benzene	**1400**	25	"	50	"	"	02/04/11	"	
Toluene	**610**	25	"	"	"	"	"	"	
Ethylbenzene	**400**	25	"	"	"	"	"	"	
m,p-Xylene	**1800**	50	"	"	"	"	"	"	
o-Xylene	**400**	25	"	"	"	"	"	"	
Tert-amyl methyl ether	ND	100	"	"	"	"	"	"	
Tert-butyl alcohol	**390**	10	"	1	"	"	02/04/11	"	

SunStar Laboratories, Inc.

Daniel Chavez, Project Manager

The results in this report apply to the samples analyzed in accordance with the chain of custody document. This analytical report must be reproduced in its entirety.

SunStar Laboratories, Inc.
PROVIDING QUALITY ANALYTICAL SERVICES NATIONWIDE

25712 Commercentre Drive
Lake Forest, California 92630
949.297.5020 Phone
949.297.5027 Fax

Murex	Project: Cenco	
2640 Walnut Ave. Unit F	Project Number: 1003-001-300	**Reported:**
Tustin CA, 92780	Project Manager: Jeremy Squire	02/08/11 16:47

LL_W15A_02011

T110097-01 (Water)

Analyte	Result	Reporting Limit	Units	Dilution	Batch	Prepared	Analyzed	Method	Notes
SunStar Laboratories, Inc.									
Volatile Organic Compounds by EPA Method 8260B									
Di-isopropyl ether	ND	2.0	ug/l	1	1020104	02/01/11	02/04/11	EPA 8260B	
Ethyl tert-butyl ether	ND	2.0	"	"	"	"	"	"	
Methyl tert-butyl ether	**260**	50	"	50	"	"	02/04/11	"	
1,1,2-trichloro-1,2,2-trifluoroethane (CFC 113)	ND	5.0	"	1	"	"	02/04/11	"	
Surrogate 4-Bromofluorobenzene		*253 %*	*77.1-110*		"	"	"	"	*S-GC*
Surrogate Dibromofluoromethane		*89.1 %*	*66.3-111*		"	"	"	"	
Surrogate Toluene-d8		*110 %*	*84.7-109*		"	"	"	"	*S-GC*

SunStar Laboratories, Inc.

The results in this report apply to the samples analyzed in accordance with the chain of custody document. This analytical report must be reproduced in its entirety.

Daniel Chavez, Project Manager

SunStar Laboratories, Inc.
Providing Quality Analytical Services Nationwide

25712 Commercentre Drive
Lake Forest, California 92630
949.297.5020 Phone
949.297.5027 Fax

Murex	Project: Cenco	
2640 Walnut Ave. Unit F	Project Number: 1003-001-300	**Reported:**
Tustin CA, 92780	Project Manager: Jeremy Squire	02/08/11 16:47

LL_W15B_02011

T110097-02 (Water)

Analyte	Result	Reporting Limit	Units	Dilution	Batch	Prepared	Analyzed	Method	Notes
SunStar Laboratories, Inc.									
Purgeable Petroleum Hydrocarbons by EPA 8015C									
C6-C12 (GRO)	**120**	50	ug/l	1	1020217	02/02/11	02/07/11	EPA 8015C	
Surrogate 4-Bromofluorobenzene		*73.8 %*	*72.6-146*		"	"	"	"	
Volatile Organic Compounds by EPA Method 8260B									
Bromobenzene	ND	1.0	ug/l	1	1020104	02/01/11	02/04/11	EPA 8260B	
Bromochloromethane	ND	1.0	"	"	"	"	"	"	
Bromodichloromethane	ND	1.0	"	"	"	"	"	"	
Bromoform	ND	1.0	"	"	"	"	"	"	
Bromomethane	ND	1.0	"	"	"	"	"	"	
n-Butylbenzene	ND	1.0	"	"	"	"	"	"	
sec-Butylbenzene	ND	1.0	"	"	"	"	"	"	
tert-Butylbenzene	ND	1.0	"	"	"	"	"	"	
Carbon tetrachloride	ND	0.50	"	"	"	"	"	"	
Chlorobenzene	ND	1.0	"	"	"	"	"	"	
Chloroethane	ND	1.0	"	"	"	"	"	"	
Chloroform	ND	1.0	"	"	"	"	"	"	
Chloromethane	ND	1.0	"	"	"	"	"	"	
2-Chlorotoluene	ND	1.0	"	"	"	"	"	"	
4-Chlorotoluene	ND	1.0	"	"	"	"	"	"	
Dibromochloromethane	ND	1.0	"	"	"	"	"	"	
1,2-Dibromo-3-chloropropane	ND	1.0	"	"	"	"	"	"	
1,2-Dibromoethane (EDB)	ND	1.0	"	"	"	"	"	"	
Dibromomethane	ND	1.0	"	"	"	"	"	"	
1,2-Dichlorobenzene	ND	1.0	"	"	"	"	"	"	
1,3-Dichlorobenzene	ND	1.0	"	"	"	"	"	"	
1,4-Dichlorobenzene	ND	1.0	"	"	"	"	"	"	
Dichlorodifluoromethane	ND	0.50	"	"	"	"	"	"	
1,1-Dichloroethane	ND	1.0	"	"	"	"	"	"	
1,2-Dichloroethane	ND	0.50	"	"	"	"	"	"	
1,1-Dichloroethene	ND	1.0	"	"	"	"	"	"	
cis-1,2-Dichloroethene	ND	1.0	"	"	"	"	"	"	
trans-1,2-Dichloroethene	ND	1.0	"	"	"	"	"	"	

SunStar Laboratories, Inc.

The results in this report apply to the samples analyzed in accordance with the chain of custody document. This analytical report must be reproduced in its entirety.

Daniel Chavez, Project Manager

SunStar Laboratories, Inc.
Providing Quality Analytical Services Nationwide

25712 Commercentre Drive
Lake Forest, California 92630
949.297.5020 Phone
949.297.5027 Fax

Murex	Project: Cenco	
2640 Walnut Ave. Unit F	Project Number: 1003-001-300	**Reported:**
Tustin CA, 92780	Project Manager: Jeremy Squire	02/08/11 16:47

LL_W15B_02011

T110097-02 (Water)

SunStar Laboratories, Inc.

Volatile Organic Compounds by EPA Method 8260B

Analyte	Result	Reporting Limit	Units	Dilution	Batch	Prepared	Analyzed	Method	Notes
1,2-Dichloropropane	ND	1.0	ug/l	1	1020104	02/01/11	02/04/11	EPA 8260B	
1,3-Dichloropropane	ND	1.0	"	"	"	"	"	"	
2,2-Dichloropropane	ND	1.0	"	"	"	"	"	"	
1,1-Dichloropropene	ND	1.0	"	"	"	"	"	"	
cis-1,3-Dichloropropene	ND	0.50	"	"	"	"	"	"	
trans-1,3-Dichloropropene	ND	0.50	"	"	"	"	"	"	
Hexachlorobutadiene	ND	1.0	"	"	"	"	"	"	
Isopropylbenzene	**2.1**	1.0	"	"	"	"	"	"	
p-Isopropyltoluene	ND	1.0	"	"	"	"	"	"	
Methylene chloride	ND	1.0	"	"	"	"	"	"	
Naphthalene	ND	1.0	"	"	"	"	"	"	
n-Propylbenzene	**2.8**	1.0	"	"	"	"	"	"	
Styrene	ND	1.0	"	"	"	"	"	"	
1,1,2,2-Tetrachloroethane	ND	1.0	"	"	"	"	"	"	
1,1,1,2-Tetrachloroethane	ND	1.0	"	"	"	"	"	"	
Tetrachloroethene	ND	1.0	"	"	"	"	"	"	
1,2,3-Trichlorobenzene	**2.0**	1.0	"	"	"	"	"	"	
1,2,4-Trichlorobenzene	**1.4**	1.0	"	"	"	"	"	"	
1,1,2-Trichloroethane	ND	1.0	"	"	"	"	"	"	
1,1,1-Trichloroethane	ND	1.0	"	"	"	"	"	"	
Trichloroethene	ND	1.0	"	"	"	"	"	"	
Trichlorofluoromethane	ND	1.0	"	"	"	"	"	"	
1,2,3-Trichloropropane	ND	1.0	"	"	"	"	"	"	
1,3,5-Trimethylbenzene	ND	1.0	"	"	"	"	"	"	
1,2,4-Trimethylbenzene	ND	1.0	"	"	"	"	"	"	
Vinyl chloride	ND	1.0	"	"	"	"	"	"	
Benzene	**7.0**	0.50	"	"	"	"	"	"	
Toluene	**1.7**	0.50	"	"	"	"	"	"	
Ethylbenzene	**0.55**	0.50	"	"	"	"	"	"	
m,p-Xylene	**4.0**	1.0	"	"	"	"	"	"	
o-Xylene	**1.4**	0.50	"	"	"	"	"	"	
Tert-amyl methyl ether	ND	2.0	"	"	"	"	"	"	
Tert-butyl alcohol	**21**	10	"	"	"	"	"	"	

SunStar Laboratories, Inc.

The results in this report apply to the samples analyzed in accordance with the chain of custody document. This analytical report must be reproduced in its entirety.

Daniel Chavez, Project Manager

SunStar Laboratories, Inc.
Providing Quality Analytical Services Nationwide

25712 Commercentre Drive
Lake Forest, California 92630
949.297.5020 Phone
949.297.5027 Fax

Murex	Project: Cenco	
2640 Walnut Ave. Unit F	Project Number: 1003-001-300	**Reported:**
Tustin CA, 92780	Project Manager: Jeremy Squire	02/08/11 16:47

LL_W15B_02011

T110097-02 (Water)

Analyte	Result	Reporting Limit	Units	Dilution	Batch	Prepared	Analyzed	Method	Notes
SunStar Laboratories, Inc.									
Volatile Organic Compounds by EPA Method 8260B									
Di-isopropyl ether	ND	2.0	ug/l	1	1020104	02/01/11	02/04/11	EPA 8260B	
Ethyl tert-butyl ether	ND	2.0	"	"	"	"	"	"	
Methyl tert-butyl ether	**22**	1.0	"	"	"	"	"	"	
1,1,2-trichloro-1,2,2-trifluoroethane (CFC 113)	ND	5.0	"	"	"	"	"	"	
Surrogate 4-Bromofluorobenzene		*111 %*		*77.1-110*	"	"	"	"	*S-DUP*
Surrogate Dibromofluoromethane		*75.9 %*		*66.3-111*	"	"	"	"	
Surrogate Toluene-d8		*120 %*		*84.7-109*	"	"	"	"	*S-GC*

SunStar Laboratories, Inc.

The results in this report apply to the samples analyzed in accordance with the chain of custody document. This analytical report must be reproduced in its entirety.

Daniel Chavez, Project Manager

SunStar Laboratories, Inc.
Providing Quality Analytical Services Nationwide

25712 Commercentre Drive
Lake Forest, California 92630
949.297.5020 Phone
949.297.5027 Fax

Murex	Project: Cenco	
2640 Walnut Ave. Unit F	Project Number: 1003-001-300	**Reported:**
Tustin CA, 92780	Project Manager: Jeremy Squire	02/08/11 16:47

LL_W15C_02011

T110097-03 (Water)

Analyte	Result	Reporting Limit	Units	Dilution	Batch	Prepared	Analyzed	Method	Notes
SunStar Laboratories, Inc.									
Purgeable Petroleum Hydrocarbons by EPA 8015C									
C6-C12 (GRO)	**94**	50	ug/l	1	1020217	02/02/11	02/07/11	EPA 8015C	
Surrogate 4-Bromofluorobenzene		*74.2 %*	*72.6-146*		"	"	"	"	
Volatile Organic Compounds by EPA Method 8260B									
Bromobenzene	ND	1.0	ug/l	1	1020104	02/01/11	02/04/11	EPA 8260B	
Bromochloromethane	ND	1.0	"	"	"	"	"	"	
Bromodichloromethane	ND	1.0	"	"	"	"	"	"	
Bromoform	ND	1.0	"	"	"	"	"	"	
Bromomethane	ND	1.0	"	"	"	"	"	"	
n-Butylbenzene	ND	1.0	"	"	"	"	"	"	
sec-Butylbenzene	ND	1.0	"	"	"	"	"	"	
tert-Butylbenzene	ND	1.0	"	"	"	"	"	"	
Carbon tetrachloride	ND	0.50	"	"	"	"	"	"	
Chlorobenzene	ND	1.0	"	"	"	"	"	"	
Chloroethane	ND	1.0	"	"	"	"	"	"	
Chloroform	ND	1.0	"	"	"	"	"	"	
Chloromethane	ND	1.0	"	"	"	"	"	"	
2-Chlorotoluene	ND	1.0	"	"	"	"	"	"	
4-Chlorotoluene	ND	1.0	"	"	"	"	"	"	
Dibromochloromethane	ND	1.0	"	"	"	"	"	"	
1,2-Dibromo-3-chloropropane	ND	1.0	"	"	"	"	"	"	
1,2-Dibromoethane (EDB)	ND	1.0	"	"	"	"	"	"	
Dibromomethane	ND	1.0	"	"	"	"	"	"	
1,2-Dichlorobenzene	ND	1.0	"	"	"	"	"	"	
1,3-Dichlorobenzene	ND	1.0	"	"	"	"	"	"	
1,4-Dichlorobenzene	ND	1.0	"	"	"	"	"	"	
Dichlorodifluoromethane	ND	0.50	"	"	"	"	"	"	
1,1-Dichloroethane	ND	1.0	"	"	"	"	"	"	
1,2-Dichloroethane	ND	0.50	"	"	"	"	"	"	
1,1-Dichloroethene	ND	1.0	"	"	"	"	"	"	
cis-1,2-Dichloroethene	**2.6**	1.0	"	"	"	"	"	"	
trans-1,2-Dichloroethene	ND	1.0	"	"	"	"	"	"	
1,2-Dichloropropane	ND	1.0	"	"	"	"	"	"	

SunStar Laboratories, Inc.

The results in this report apply to the samples analyzed in accordance with the chain of custody document. This analytical report must be reproduced in its entirety.

Daniel Chavez, Project Manager

SunStar Laboratories, Inc.
Providing Quality Analytical Services Nationwide

25712 Commercentre Drive
Lake Forest, California 92630
949.297.5020 Phone
949.297.5027 Fax

Murex	Project: Cenco	
2640 Walnut Ave. Unit F	Project Number: 1003-001-300	**Reported:**
Tustin CA, 92780	Project Manager: Jeremy Squire	02/08/11 16:47

LL_W15C_02011

T110097-03 (Water)

SunStar Laboratories, Inc.

Volatile Organic Compounds by EPA Method 8260B

Analyte	Result	Reporting Limit	Units	Dilution	Batch	Prepared	Analyzed	Method	Notes
1,3-Dichloropropane	ND	1.0	ug/l	1	1020104	02/01/11	02/04/11	EPA 8260B	
2,2-Dichloropropane	ND	1.0	"	"	"	"	"	"	
1,1-Dichloropropene	ND	1.0	"	"	"	"	"	"	
cis-1,3-Dichloropropene	ND	0.50	"	"	"	"	"	"	
trans-1,3-Dichloropropene	ND	0.50	"	"	"	"	"	"	
Hexachlorobutadiene	ND	1.0	"	"	"	"	"	"	
Isopropylbenzene	ND	1.0	"	"	"	"	"	"	
p-Isopropyltoluene	ND	1.0	"	"	"	"	"	"	
Methylene chloride	ND	1.0	"	"	"	"	"	"	
Naphthalene	ND	1.0	"	"	"	"	"	"	
n-Propylbenzene	ND	1.0	"	"	"	"	"	"	
Styrene	ND	1.0	"	"	"	"	"	"	
1,1,2,2-Tetrachloroethane	ND	1.0	"	"	"	"	"	"	
1,1,1,2-Tetrachloroethane	ND	1.0	"	"	"	"	"	"	
Tetrachloroethene	ND	1.0	"	"	"	"	"	"	
1,2,3-Trichlorobenzene	ND	1.0	"	"	"	"	"	"	
1,2,4-Trichlorobenzene	ND	1.0	"	"	"	"	"	"	
1,1,2-Trichloroethane	ND	1.0	"	"	"	"	"	"	
1,1,1-Trichloroethane	ND	1.0	"	"	"	"	"	"	
Trichloroethene	**1.8**	1.0	"	"	"	"	"	"	
Trichlorofluoromethane	ND	1.0	"	"	"	"	"	"	
1,2,3-Trichloropropane	ND	1.0	"	"	"	"	"	"	
1,3,5-Trimethylbenzene	ND	1.0	"	"	"	"	"	"	
1,2,4-Trimethylbenzene	ND	1.0	"	"	"	"	"	"	
Vinyl chloride	ND	1.0	"	"	"	"	"	"	
Benzene	**1.6**	0.50	"	"	"	"	"	"	
Toluene	**0.85**	0.50	"	"	"	"	"	"	
Ethylbenzene	ND	0.50	"	"	"	"	"	"	
m,p-Xylene	**2.0**	1.0	"	"	"	"	"	"	
o-Xylene	ND	0.50	"	"	"	"	"	"	
Tert-amyl methyl ether	ND	2.0	"	"	"	"	"	"	
Tert-butyl alcohol	ND	10	"	"	"	"	"	"	

SunStar Laboratories, Inc.

The results in this report apply to the samples analyzed in accordance with the chain of custody document. This analytical report must be reproduced in its entirety.

Daniel Chavez, Project Manager

SunStar Laboratories, Inc.
PROVIDING QUALITY ANALYTICAL SERVICES NATIONWIDE

25712 Commercentre Drive
Lake Forest, California 92630
949.297.5020 Phone
949.297.5027 Fax

Murex	Project: Cenco	
2640 Walnut Ave. Unit F	Project Number: 1003-001-300	**Reported:**
Tustin CA, 92780	Project Manager: Jeremy Squire	02/08/11 16:47

LL_W15C_02011

T110097-03 (Water)

Analyte	Result	Reporting Limit	Units	Dilution	Batch	Prepared	Analyzed	Method	Notes
SunStar Laboratories, Inc.									
Volatile Organic Compounds by EPA Method 8260B									
Di-isopropyl ether	ND	2.0	ug/l	1	1020104	02/01/11	02/04/11	EPA 8260B	
Ethyl tert-butyl ether	ND	2.0	"	"	"	"	"	"	
Methyl tert-butyl ether	ND	1.0	"	"	"	"	"	"	
1,1,2-trichloro-1,2,2-trifluoroethane (CFC 113)	ND	5.0	"	"	"	"	"	"	
Surrogate 4-Bromofluorobenzene		*90.4 %*	*77.1-110*		"	"	"	"	
Surrogate Dibromofluoromethane		*78.2 %*	*66.3-111*		"	"	"	"	
Surrogate Toluene-d8		*109 %*	*84.7-109*		"	"	"	"	

SunStar Laboratories, Inc.

The results in this report apply to the samples analyzed in accordance with the chain of custody document. This analytical report must be reproduced in its entirety.

Daniel Chavez, Project Manager

SunStar Laboratories, Inc.
Providing Quality Analytical Services Nationwide

25712 Commercentre Drive
Lake Forest, California 92630
949.297.5020 Phone
949.297.5027 Fax

Murex	Project: Cenco	
2640 Walnut Ave. Unit F	Project Number: 1003-001-300	**Reported:**
Tustin CA, 92780	Project Manager: Jeremy Squire	02/08/11 16:47

TB_020111

T110097-04 (Water)

Analyte	Result	Reporting Limit	Units	Dilution	Batch	Prepared	Analyzed	Method	Notes
SunStar Laboratories, Inc.									
Volatile Organic Compounds by EPA Method 8260B									
Bromobenzene	ND	1.0	ug/l	1	1020104	02/01/11	02/04/11	EPA 8260B	
Bromochloromethane	ND	1.0	"	"	"	"	"	"	
Bromodichloromethane	ND	1.0	"	"	"	"	"	"	
Bromoform	ND	1.0	"	"	"	"	"	"	
Bromomethane	ND	1.0	"	"	"	"	"	"	
n-Butylbenzene	ND	1.0	"	"	"	"	"	"	
sec-Butylbenzene	ND	1.0	"	"	"	"	"	"	
tert-Butylbenzene	ND	1.0	"	"	"	"	"	"	
Carbon tetrachloride	ND	0.50	"	"	"	"	"	"	
Chlorobenzene	ND	1.0	"	"	"	"	"	"	
Chloroethane	ND	1.0	"	"	"	"	"	"	
Chloroform	ND	1.0	"	"	"	"	"	"	
Chloromethane	ND	1.0	"	"	"	"	"	"	
2-Chlorotoluene	ND	1.0	"	"	"	"	"	"	
4-Chlorotoluene	ND	1.0	"	"	"	"	"	"	
Dibromochloromethane	ND	1.0	"	"	"	"	"	"	
1,2-Dibromo-3-chloropropane	ND	1.0	"	"	"	"	"	"	
1,2-Dibromoethane (EDB)	ND	1.0	"	"	"	"	"	"	
Dibromomethane	ND	1.0	"	"	"	"	"	"	
1,2-Dichlorobenzene	ND	1.0	"	"	"	"	"	"	
1,3-Dichlorobenzene	ND	1.0	"	"	"	"	"	"	
1,4-Dichlorobenzene	ND	1.0	"	"	"	"	"	"	
Dichlorodifluoromethane	ND	0.50	"	"	"	"	"	"	
1,1-Dichloroethane	ND	1.0	"	"	"	"	"	"	
1,2-Dichloroethane	ND	0.50	"	"	"	"	"	"	
1,1-Dichloroethene	ND	1.0	"	"	"	"	"	"	
cis-1,2-Dichloroethene	ND	1.0	"	"	"	"	"	"	
trans-1,2-Dichloroethene	ND	1.0	"	"	"	"	"	"	
1,2-Dichloropropane	ND	1.0	"	"	"	"	"	"	
1,3-Dichloropropane	ND	1.0	"	"	"	"	"	"	
2,2-Dichloropropane	ND	1.0	"	"	"	"	"	"	
1,1-Dichloropropene	ND	1.0	"	"	"	"	"	"	

SunStar Laboratories, Inc.

The results in this report apply to the samples analyzed in accordance with the chain of custody document. This analytical report must be reproduced in its entirety.

Daniel Chavez, Project Manager

SunStar Laboratories, Inc.
Providing Quality Analytical Services Nationwide

25712 Commercentre Drive
Lake Forest, California 92630
949.297.5020 Phone
949.297.5027 Fax

Murex	Project: Cenco	
2640 Walnut Ave. Unit F	Project Number: 1003-001-300	**Reported:**
Tustin CA, 92780	Project Manager: Jeremy Squire	02/08/11 16:47

TB_020111

T110097-04 (Water)

Analyte	Result	Reporting Limit	Units	Dilution	Batch	Prepared	Analyzed	Method	Notes
SunStar Laboratories, Inc.									
Volatile Organic Compounds by EPA Method 8260B									
cis-1,3-Dichloropropene	ND	0.50	ug/l	1	1020104	02/01/11	02/04/11	EPA 8260B	
trans-1,3-Dichloropropene	ND	0.50	"	"	"	"	"	"	
Hexachlorobutadiene	ND	1.0	"	"	"	"	"	"	
Isopropylbenzene	ND	1.0	"	"	"	"	"	"	
p-Isopropyltoluene	ND	1.0	"	"	"	"	"	"	
Methylene chloride	ND	1.0	"	"	"	"	"	"	
Naphthalene	ND	1.0	"	"	"	"	"	"	
n-Propylbenzene	ND	1.0	"	"	"	"	"	"	
Styrene	ND	1.0	"	"	"	"	"	"	
1,1,2,2-Tetrachloroethane	ND	1.0	"	"	"	"	"	"	
1,1,1,2-Tetrachloroethane	ND	1.0	"	"	"	"	"	"	
Tetrachloroethene	ND	1.0	"	"	"	"	"	"	
1,2,3-Trichlorobenzene	ND	1.0	"	"	"	"	"	"	
1,2,4-Trichlorobenzene	ND	1.0	"	"	"	"	"	"	
1,1,2-Trichloroethane	ND	1.0	"	"	"	"	"	"	
1,1,1-Trichloroethane	ND	1.0	"	"	"	"	"	"	
Trichloroethene	ND	1.0	"	"	"	"	"	"	
Trichlorofluoromethane	ND	1.0	"	"	"	"	"	"	
1,2,3-Trichloropropane	ND	1.0	"	"	"	"	"	"	
1,3,5-Trimethylbenzene	ND	1.0	"	"	"	"	"	"	
1,2,4-Trimethylbenzene	ND	1.0	"	"	"	"	"	"	
Vinyl chloride	ND	1.0	"	"	"	"	"	"	
Benzene	ND	0.50	"	"	"	"	"	"	
Toluene	ND	0.50	"	"	"	"	"	"	
Ethylbenzene	ND	0.50	"	"	"	"	"	"	
m,p-Xylene	ND	1.0	"	"	"	"	"	"	
o-Xylene	ND	0.50	"	"	"	"	"	"	
Tert-amyl methyl ether	ND	2.0	"	"	"	"	"	"	
Tert-butyl alcohol	ND	10	"	"	"	"	"	"	
Di-isopropyl ether	ND	2.0	"	"	"	"	"	"	
Ethyl tert-butyl ether	ND	2.0	"	"	"	"	"	"	
Methyl tert-butyl ether	ND	1.0	"	"	"	"	"	"	

SunStar Laboratories, Inc.

The results in this report apply to the samples analyzed in accordance with the chain of custody document. This analytical report must be reproduced in its entirety.

Daniel Chavez, Project Manager

SunStar Laboratories, Inc.
PROVIDING QUALITY ANALYTICAL SERVICES NATIONWIDE

25712 Commercentre Drive
Lake Forest, California 92630
949.297.5020 Phone
949.297.5027 Fax

Murex	Project: Cenco	
2640 Walnut Ave. Unit F	Project Number: 1003-001-300	**Reported:**
Tustin CA, 92780	Project Manager: Jeremy Squire	02/08/11 16:47

TB_020111

T110097-04 (Water)

Analyte	Result	Reporting Limit	Units	Dilution	Batch	Prepared	Analyzed	Method	Notes
SunStar Laboratories, Inc.									
Volatile Organic Compounds by EPA Method 8260B									
1,1,2-trichloro-1,2,2-trifluoroethane (CFC 113)	ND	5.0	ug/l	1	1020104	02/01/11	02/04/11	EPA 8260B	
Surrogate 4-Bromofluorobenzene		*87.5 %*	*77.1-110*		"	"	"	"	
Surrogate Dibromofluoromethane		*75.5 %*	*66.3-111*		"	"	"	"	
Surrogate Toluene-d8		*101 %*	*84.7-109*		"	"	"	"	

SunStar Laboratories, Inc.

The results in this report apply to the samples analyzed in accordance with the chain of custody document. This analytical report must be reproduced in its entirety.

Daniel Chavez, Project Manager

SunStar Laboratories, Inc.
Providing Quality Analytical Services Nationwide

25712 Commercentre Drive
Lake Forest, California 92630
949.297.5020 Phone
949.297.5027 Fax

Murex	Project: Cenco	
2640 Walnut Ave. Unit F	Project Number: 1003-001-300	**Reported:**
Tustin CA, 92780	Project Manager: Jeremy Squire	02/08/11 16:47

Purgeable Petroleum Hydrocarbons by EPA 8015C - Quality Control

SunStar Laboratories, Inc.

Analyte	Result	Reporting Limit	Units	Spike Level	Source Result	%REC	%REC Limits	RPD	RPD Limit	Notes
Batch 1020217 - EPA 5030 GC										
Blank (1020217-BLK1)				Prepared: 02/02/11		Analyzed: 02/07/11				
C6-C12 (GRO)	ND	50	ug/l							
Surrogate 4-Bromofluorobenzene	*75.9*		*"*	*100*		*75.9*	*72.6-146*			
LCS (1020217-BS1)				Prepared: 02/02/11		Analyzed: 02/07/11				
C6-C12 (GRO)	4850	50	ug/l	5500		88.3	75-125			
Surrogate 4-Bromofluorobenzene	*81.4*		*"*	*100*		*81.4*	*72.6-146*			
Matrix Spike (1020217-MS1)		**Source: T110097-01**		Prepared: 02/02/11		Analyzed: 02/07/11				
C6-C12 (GRO)	16600	50	ug/l	5500	13600	53.6	65-135			QM-05
Surrogate 4-Bromofluorobenzene	*98.7*		*"*	*100*		*98.7*	*72.6-146*			
Matrix Spike Dup (1020217-MSD1)		**Source: T110097-01**		Prepared: 02/02/11		Analyzed: 02/07/11				
C6-C12 (GRO)	20400	50	ug/l	5500	13600	123	65-135	20.8	20	QM-05
Surrogate 4-Bromofluorobenzene	*123*		*"*	*100*		*123*	*72.6-146*			

SunStar Laboratories, Inc.

The results in this report apply to the samples analyzed in accordance with the chain of custody document. This analytical report must be reproduced in its entirety.

Daniel Chavez, Project Manager

SunStar Laboratories, Inc.
Providing Quality Analytical Services Nationwide

25712 Commercentre Drive
Lake Forest, California 92630
949.297.5020 Phone
949.297.5027 Fax

Murex	Project: Cenco	
2640 Walnut Ave. Unit F	Project Number: 1003-001-300	**Reported:**
Tustin CA, 92780	Project Manager: Jeremy Squire	02/08/11 16:47

Volatile Organic Compounds by EPA Method 8260B - Quality Control

SunStar Laboratories, Inc.

Analyte	Result	Reporting Limit	Units	Spike Level	Source Result	%REC	%REC Limits	RPD	RPD Limit	Notes
Batch 1020104 - EPA 5030 GCMS										
Blank (1020104-BLK1)				Prepared: 02/01/11 Analyzed: 02/04/11						
Bromobenzene	ND	1.0	ug/l							
Bromochloromethane	ND	1.0	"							
Bromodichloromethane	ND	1.0	"							
Bromoform	ND	1.0	"							
Bromomethane	ND	1.0	"							
n-Butylbenzene	ND	1.0	"							
sec-Butylbenzene	ND	1.0	"							
tert-Butylbenzene	ND	1.0	"							
Carbon tetrachloride	ND	0.50	"							
Chlorobenzene	ND	1.0	"							
Chloroethane	ND	1.0	"							
Chloroform	ND	1.0	"							
Chloromethane	ND	1.0	"							
2-Chlorotoluene	ND	1.0	"							
4-Chlorotoluene	ND	1.0	"							
Dibromochloromethane	ND	1.0	"							
1,2-Dibromo-3-chloropropane	ND	1.0	"							
1,2-Dibromoethane (EDB)	ND	1.0	"							
Dibromomethane	ND	1.0	"							
1,2-Dichlorobenzene	ND	1.0	"							
1,3-Dichlorobenzene	ND	1.0	"							
1,4-Dichlorobenzene	ND	1.0	"							
Dichlorodifluoromethane	ND	0.50	"							
1,1-Dichloroethane	ND	1.0	"							
1,2-Dichloroethane	ND	0.50	"							
1,1-Dichloroethene	ND	1.0	"							
cis-1,2-Dichloroethene	ND	1.0	"							
trans-1,2-Dichloroethene	ND	1.0	"							
1,2-Dichloropropane	ND	1.0	"							
1,3-Dichloropropane	ND	1.0	"							
2,2-Dichloropropane	ND	1.0	"							
1,1-Dichloropropene	ND	1.0	"							
cis-1,3-Dichloropropene	ND	0.50	"							
trans-1,3-Dichloropropene	ND	0.50	"							
Hexachlorobutadiene	ND	1.0	"							
Isopropylbenzene	ND	1.0	"							

SunStar Laboratories, Inc.

The results in this report apply to the samples analyzed in accordance with the chain of custody document. This analytical report must be reproduced in its entirety.

Daniel Chavez, Project Manager

SunStar Laboratories, Inc.
Providing Quality Analytical Services Nationwide

25712 Commercentre Drive
Lake Forest, California 92630
949.297.5020 Phone
949.297.5027 Fax

Murex	Project: Cenco	
2640 Walnut Ave. Unit F	Project Number: 1003-001-300	**Reported:**
Tustin CA, 92780	Project Manager: Jeremy Squire	02/08/11 16:47

Volatile Organic Compounds by EPA Method 8260B - Quality Control

SunStar Laboratories, Inc.

Analyte	Result	Reporting Limit	Units	Spike Level	Source Result	%REC	%REC Limits	RPD	RPD Limit	Notes
Batch 1020104 - EPA 5030 GCMS										
Blank (1020104-BLK1)				Prepared: 02/01/11 Analyzed: 02/04/11						
p-Isopropyltoluene	ND	1.0	ug/l							
Methylene chloride	ND	1.0	"							
Naphthalene	ND	1.0	"							
n-Propylbenzene	ND	1.0	"							
Styrene	ND	1.0	"							
1,1,2,2-Tetrachloroethane	ND	1.0	"							
1,1,1,2-Tetrachloroethane	ND	1.0	"							
Tetrachloroethene	ND	1.0	"							
1,2,3-Trichlorobenzene	ND	1.0	"							
1,2,4-Trichlorobenzene	ND	1.0	"							
1,1,2-Trichloroethane	ND	1.0	"							
1,1,1-Trichloroethane	ND	1.0	"							
Trichloroethene	ND	1.0	"							
Trichlorofluoromethane	ND	1.0	"							
1,2,3-Trichloropropane	ND	1.0	"							
1,3,5-Trimethylbenzene	ND	1.0	"							
1,2,4-Trimethylbenzene	ND	1.0	"							
Vinyl chloride	ND	1.0	"							
Benzene	ND	0.50	"							
Toluene	ND	0.50	"							
Ethylbenzene	ND	0.50	"							
m,p-Xylene	ND	1.0	"							
o-Xylene	ND	0.50	"							
Tert-amyl methyl ether	ND	2.0	"							
Tert-butyl alcohol	ND	10	"							
Di-isopropyl ether	ND	2.0	"							
Ethyl tert-butyl ether	ND	2.0	"							
Methyl tert-butyl ether	ND	1.0	"							
1,1,2-trichloro-1,2,2-trifluoroethane (CFC 113)	ND	5.0	"							
Surrogate 4-Bromofluorobenzene	*6.53*		*"*	*8.00*		*81.6*	*77.1-110*			
Surrogate Dibromofluoromethane	*7.75*		*"*	*8.00*		*96.9*	*66.3-111*			
Surrogate Toluene-d8	*8.20*		*"*	*8.00*		*102*	*84.7-109*			

SunStar Laboratories, Inc.

The results in this report apply to the samples analyzed in accordance with the chain of custody document. This analytical report must be reproduced in its entirety.

Daniel Chavez, Project Manager

SunStar Laboratories, Inc.
Providing Quality Analytical Services Nationwide

25712 Commercentre Drive
Lake Forest, California 92630
949.297.5020 Phone
949.297.5027 Fax

Murex	Project: Cenco	
2640 Walnut Ave. Unit F	Project Number: 1003-001-300	**Reported:**
Tustin CA, 92780	Project Manager: Jeremy Squire	02/08/11 16:47

Volatile Organic Compounds by EPA Method 8260B - Quality Control

SunStar Laboratories, Inc.

Analyte	Result	Reporting Limit	Units	Spike Level	Source Result	%REC	%REC Limits	RPD	RPD Limit	Notes
Batch 1020104 - EPA 5030 GCMS										
LCS (1020104-BS1)				Prepared: 02/01/11	Analyzed: 02/04/11					
Chlorobenzene	18 1	1.0	ug/l	20.0		90.6	75-125			
1,1-Dichloroethene	22.4	1.0	"	20.0		112	75-125			
Trichloroethene	17 3	1.0	"	20.0		86.6	75-125			
Benzene	17.0	0.50	"	20.0		85.0	75-125			
Toluene	18 5	0.50	"	20.0		92.6	75-125			
Surrogate 4-Bromofluorobenzene	*7.74*		*"*	*8.00*		*96.8*	*77.1-110*			
Surrogate Dibromofluoromethane	*5.88*		*"*	*8.00*		*73.5*	*66.3-111*			
Surrogate Toluene-d8	*8.47*		*"*	*8.00*		*106*	*84.7-109*			
LCS Dup (1020104-BSD1)				Prepared: 02/01/11	Analyzed: 02/04/11					
Chlorobenzene	17.0	1.0	ug/l	20.0		85.0	75-125	6.37	20	
1,1-Dichloroethene	21 3	1.0	"	20.0		106	75-125	5.04	20	
Trichloroethene	16.4	1.0	"	20.0		82.2	75-125	5.16	20	
Benzene	15 2	0.50	"	20.0		76.0	75-125	11.2	20	
Toluene	16 2	0.50	"	20.0		81.1	75-125	13.2	20	
Surrogate 4-Bromofluorobenzene	*7.56*		*"*	*8.00*		*94.5*	*77.1-110*			
Surrogate Dibromofluoromethane	*5.27*		*"*	*8.00*		*65.9*	*66.3-111*			*S-GC*
Surrogate Toluene-d8	*8.13*		*"*	*8.00*		*102*	*84.7-109*			

SunStar Laboratories, Inc.

The results in this report apply to the samples analyzed in accordance with the chain of custody document. This analytical report must be reproduced in its entirety.

Daniel Chavez, Project Manager

SunStar Laboratories, Inc.
PROVIDING QUALITY ANALYTICAL SERVICES NATIONWIDE

25712 Commercentre Drive
Lake Forest, California 92630
949.297.5020 Phone
949.297.5027 Fax

Murex	Project: Cenco	
2640 Walnut Ave. Unit F	Project Number: 1003-001-300	**Reported:**
Tustin CA, 92780	Project Manager: Jeremy Squire	02/08/11 16:47

Notes and Definitions

S-GC	Surrogate recovery outside of established control limits. The data was accepted based on valid recovery of the remaining surrogate(s).
S-DUP	Duplicate extraction and analysis confirmed surrogate failure due to matrix effects.
QM-05	The spike recovery was outside acceptance limits for the MS and/or MSD due to possible matrix interference. The LCS was within acceptance criteria. The data is acceptable as no negative impact on data is expected.
DET	Analyte DETECTED
ND	Analyte NOT DETECTED at or above the reporting limit
NR	Not Reported
dry	Sample results reported on a dry weight basis
RPD	Relative Percent Difference

SunStar Laboratories, Inc.

The results in this report apply to the samples analyzed in accordance with the chain of custody document. This analytical report must be reproduced in its entirety.

Daniel Chavez, Project Manager

SunStar Laboratories, Inc.
25712 Commercentre Dr
Lake Forest, CA 92630
949-297-5020

Chain of Custody Record

Client: Murex Environmental, Inc.
Address: 2640 Walnut Ave, Unit F
Phone: (714) 508-0800 Fax: (714) 508-0880
Project Manager: Jeremy Squire (714) 604-5836

Date: 2·1·2011 Page: 1 Of 1
Project Name: CENCO
Collector: F. Sosic Client Project #: 1003-001-300
Batch #: T110097 EDF #:

Sample ID	Date Sampled	Time	Sample Type	8260 (VOCs NO OXY)	8260 + OXY	1,4-Dioxane	8270 Semi-Volatiles (PAHs, etc)	8021 BTEX	8015M (TPH gasoline)	8015M (TPH diesel)	Hexavalent Chromium (7199)	6010/7000 Title 22 Metals	PCBs				Total # of containers	Comments/Preservative	Laboratory ID #
LL_WISA_020111	2·1·2011	0845	GW		X				X								6		01
LL_WISB_020111	2·1·2011	1050	GW		X				X								6		02
LL_WISC_020111	2·1·2011	1420	GW		X				X								6		03
TB_020111			Water		X												2		04

Relinquished by: (signature)	Date / Time	Received by: (signat	Date / Time
[signature]	2·1·2011 1620	[signature]	2/1/11 1620
Relinquished by: (signature)	Date / Time	Received by: (signat	Date / Time
Relinquished by: (signature)	Date / Time	Received by: (signat	Date / Time

Total # of containers	20
Chain of Custody seals	✓
Seals intact? Y/N/NA	N/A
Received good condition/cold	Y 1.0°
Turn around time:	

Notes

Sample disposal Instructions: Disposal @ $2.00 each ____ Return to client ____ Pickup ____

SunStar Laboratories, Inc.
PROVIDING QUALITY ANALYTICAL SERVICES NATIONWIDE

SAMPLE RECEIVING REVIEW SHEET

BATCH # T110097

Client Name: MUREX Project: CENCO

Received by: DAN Date/Time Received: 2/1/11 1620

Delivered by : ☐ Client ☒ SunStar Courier ☐ GSO ☐ FedEx ☐ Other _____

Total number of coolers received 0 **Temp criteria = 6°C > 0°C (no frozen containers)**

Temperature: cooler #1 1.2 °C +/- the CF (- 0.2°C) = 1.0 °C corrected temperature

cooler #2 _____ °C +/- the CF (- 0.2°C) = _____ °C corrected temperature

cooler #3 _____ °C +/- the CF (- 0.2°C) = _____ °C corrected temperature

Samples outside temp. but received on ice, w/in 6 hours of final sampling.	☒ Yes	☐ No*	☐ N/A
Custody Seals Intact on Cooler/Sample	☐ Yes	☐ No*	☒ N/A
Sample Containers Intact	☒ Yes	☐ No*	
Sample labels match COC ID's	☒ Yes	☐ No*	
Total number of containers received match COC	☒ Yes	☐ No*	
Proper containers received for analyses requested on COC	☒ Yes	☐ No*	
Proper preservative indicated on COC/containers for analyses requested	☒ Yes	☐ No*	☐ N/A

Complete shipment received in good condition with correct temperatures, containers, labels, volumes preservatives and within method specified holding times. ☒ **Yes** ☐ **No***

* Complete Non-Conformance Receiving Sheet if checked Cooler/Sample Review - Initials and date BC 2/1/11

Comments:

SunStar Laboratories, Inc.
PROVIDING QUALITY ANALYTICAL SERVICES NATIONWIDE

25712 Commercentre Drive
Lake Forest, California 92630
949.297.5020 Phone
949.297.5027 Fax

09 February 2011

Jeremy Squire
Murex
2640 Walnut Ave. Unit F
Tustin, CA 92780

RE: Cenco

Enclosed are the results of analyses for samples received by the laboratory on 02/03/11 16:45. If you have any questions concerning this report, please feel free to contact me.

Sincerely,

Daniel Chavez
Project Manager

SunStar Laboratories, Inc.
PROVIDING QUALITY ANALYTICAL SERVICES NATIONWIDE

25712 Commercentre Drive
Lake Forest, California 92630
949.297.5020 Phone
949.297.5027 Fax

Murex	Project: Cenco	
2640 Walnut Ave. Unit F	Project Number: 1003-001-300	**Reported:**
Tustin CA, 92780	Project Manager: Jeremy Squire	02/09/11 14:52

ANALYTICAL REPORT FOR SAMPLES

Sample ID	Laboratory ID	Matrix	Date Sampled	Date Received
LL_W12_020311	T110112-01	Water	02/03/11 09:00	02/03/11 16:45
LL_MW107A_020311	T110112-02	Water	02/03/11 11:00	02/03/11 16:45
LL_EW1_020311_01	T110112-03	Water	02/03/11 13:30	02/03/11 16:45
LL_EW1_020311_02	T110112-04	Water	02/03/11 13:45	02/03/11 16:45
LL_MW106A_020311	T110112-05	Water	02/03/11 15:00	02/03/11 16:45
TB_020311	T110112-06	Water	02/03/11 15:00	02/03/11 16:45

SunStar Laboratories, Inc.

The results in this report apply to the samples analyzed in accordance with the chain of custody document. This analytical report must be reproduced in its entirety.

Daniel Chavez, Project Manager

SunStar Laboratories, Inc.
Providing Quality Analytical Services Nationwide

25712 Commercentre Drive
Lake Forest, California 92630
949.297.5020 Phone
949.297.5027 Fax

Murex	Project: Cenco	
2640 Walnut Ave. Unit F	Project Number: 1003-001-300	**Reported:**
Tustin CA, 92780	Project Manager: Jeremy Squire	02/09/11 14:52

LL_W12_020311

T110112-01 (Water)

Analyte	Result	Reporting Limit	Units	Dilution	Batch	Prepared	Analyzed	Method	Notes
SunStar Laboratories, Inc.									
Purgeable Petroleum Hydrocarbons by EPA 8015C									
C6-C12 (GRO)	**310**	50	ug/l	1	1020408	02/04/11	02/07/11	EPA 8015C	
Surrogate 4-Bromofluorobenzene		*107 %*	*72.6-146*		"	"	"	"	
Volatile Organic Compounds by EPA Method 8260B									
Bromobenzene	ND	1.0	ug/l	1	1020407	02/04/11	02/04/11	EPA 8260B	
Bromochloromethane	ND	1.0	"	"	"	"	"	"	
Bromodichloromethane	ND	1.0	"	"	"	"	"	"	
Bromoform	ND	1.0	"	"	"	"	"	"	
Bromomethane	ND	1.0	"	"	"	"	"	"	
n-Butylbenzene	ND	1.0	"	"	"	"	"	"	
sec-Butylbenzene	ND	1.0	"	"	"	"	"	"	
tert-Butylbenzene	ND	1.0	"	"	"	"	"	"	
Carbon tetrachloride	ND	0.50	"	"	"	"	"	"	
Chlorobenzene	ND	1.0	"	"	"	"	"	"	
Chloroethane	ND	1.0	"	"	"	"	"	"	
Chloroform	ND	1.0	"	"	"	"	"	"	
Chloromethane	ND	1.0	"	"	"	"	"	"	
2-Chlorotoluene	ND	1.0	"	"	"	"	"	"	
4-Chlorotoluene	ND	1.0	"	"	"	"	"	"	
Dibromochloromethane	ND	1.0	"	"	"	"	"	"	
1,2-Dibromo-3-chloropropane	ND	1.0	"	"	"	"	"	"	
1,2-Dibromoethane (EDB)	ND	1.0	"	"	"	"	"	"	
Dibromomethane	ND	1.0	"	"	"	"	"	"	
1,2-Dichlorobenzene	ND	1.0	"	"	"	"	"	"	
1,3-Dichlorobenzene	ND	1.0	"	"	"	"	"	"	
1,4-Dichlorobenzene	ND	1.0	"	"	"	"	"	"	
Dichlorodifluoromethane	ND	0.50	"	"	"	"	"	"	
1,1-Dichloroethane	ND	1.0	"	"	"	"	"	"	
1,2-Dichloroethane	ND	0.50	"	"	"	"	"	"	
1,1-Dichloroethene	ND	1.0	"	"	"	"	"	"	
cis-1,2-Dichloroethene	ND	1.0	"	"	"	"	"	"	
trans-1,2-Dichloroethene	ND	1.0	"	"	"	"	"	"	

SunStar Laboratories, Inc.

The results in this report apply to the samples analyzed in accordance with the chain of custody document. This analytical report must be reproduced in its entirety.

Daniel Chavez, Project Manager

SunStar Laboratories, Inc.
Providing Quality Analytical Services Nationwide

25712 Commercentre Drive
Lake Forest, California 92630
949.297.5020 Phone
949.297.5027 Fax

Murex	Project: Cenco	
2640 Walnut Ave. Unit F	Project Number: 1003-001-300	**Reported:**
Tustin CA, 92780	Project Manager: Jeremy Squire	02/09/11 14:52

LL_W12_020311

T110112-01 (Water)

SunStar Laboratories, Inc.

Volatile Organic Compounds by EPA Method 8260B

Analyte	Result	Reporting Limit	Units	Dilution	Batch	Prepared	Analyzed	Method	Notes
1,2-Dichloropropane	ND	1.0	ug/l	1	1020407	02/04/11	02/04/11	EPA 8260B	
1,3-Dichloropropane	ND	1.0	"	"	"	"	"	"	
2,2-Dichloropropane	ND	1.0	"	"	"	"	"	"	
1,1-Dichloropropene	ND	1.0	"	"	"	"	"	"	
cis-1,3-Dichloropropene	ND	0.50	"	"	"	"	"	"	
trans-1,3-Dichloropropene	ND	0.50	"	"	"	"	"	"	
Hexachlorobutadiene	ND	1.0	"	"	"	"	"	"	
Isopropylbenzene	ND	1.0	"	"	"	"	"	"	
p-Isopropyltoluene	ND	1.0	"	"	"	"	"	"	
Methylene chloride	ND	1.0	"	"	"	"	"	"	
Naphthalene	**1.0**	1.0	"	"	"	"	"	"	
n-Propylbenzene	**1.1**	1.0	"	"	"	"	"	"	
Styrene	ND	1.0	"	"	"	"	"	"	
1,1,2,2-Tetrachloroethane	ND	1.0	"	"	"	"	"	"	
1,1,1,2-Tetrachloroethane	ND	1.0	"	"	"	"	"	"	
Tetrachloroethene	ND	1.0	"	"	"	"	"	"	
1,2,3-Trichlorobenzene	ND	1.0	"	"	"	"	"	"	
1,2,4-Trichlorobenzene	ND	1.0	"	"	"	"	"	"	
1,1,2-Trichloroethane	ND	1.0	"	"	"	"	"	"	
1,1,1-Trichloroethane	ND	1.0	"	"	"	"	"	"	
Trichloroethene	ND	1.0	"	"	"	"	"	"	
Trichlorofluoromethane	ND	1.0	"	"	"	"	"	"	
1,2,3-Trichloropropane	ND	1.0	"	"	"	"	"	"	
1,3,5-Trimethylbenzene	ND	1.0	"	"	"	"	"	"	
1,2,4-Trimethylbenzene	ND	1.0	"	"	"	"	"	"	
Vinyl chloride	ND	1.0	"	"	"	"	"	"	
Benzene	ND	0.50	"	"	"	"	"	"	
Toluene	ND	0.50	"	"	"	"	"	"	
Ethylbenzene	ND	0.50	"	"	"	"	"	"	
m,p-Xylene	ND	1.0	"	"	"	"	"	"	
o-Xylene	ND	0.50	"	"	"	"	"	"	
Tert-amyl methyl ether	ND	2.0	"	"	"	"	"	"	

SunStar Laboratories, Inc.

The results in this report apply to the samples analyzed in accordance with the chain of custody document. This analytical report must be reproduced in its entirety.

Daniel Chavez, Project Manager

SunStar Laboratories, Inc.
PROVIDING QUALITY ANALYTICAL SERVICES NATIONWIDE

25712 Commercentre Drive
Lake Forest, California 92630
949.297.5020 Phone
949.297.5027 Fax

Murex	Project: Cenco	
2640 Walnut Ave. Unit F	Project Number: 1003-001-300	**Reported:**
Tustin CA, 92780	Project Manager: Jeremy Squire	02/09/11 14:52

LL_W12_020311

T110112-01 (Water)

Analyte	Result	Reporting Limit	Units	Dilution	Batch	Prepared	Analyzed	Method	Notes
SunStar Laboratories, Inc.									
Volatile Organic Compounds by EPA Method 8260B									
Tert-butyl alcohol	ND	10	ug/l	1	1020407	02/04/11	02/04/11	EPA 8260B	
Di-isopropyl ether	ND	2.0	"	"	"	"	"	"	
Ethyl tert-butyl ether	ND	2.0	"	"	"	"	"	"	
Methyl tert-butyl ether	ND	1.0	"	"	"	"	"	"	
1,1,2-trichloro-1,2,2-trifluoroethane (CFC 113)	ND	5.0	"	"	"	"	"	"	
Surrogate 4-Bromofluorobenzene		*101 %*	*77.1-110*		"	"	"	"	
Surrogate Dibromofluoromethane		*85.9 %*	*66.3-111*		"	"	"	"	
Surrogate Toluene-d8		*111 %*	*84.7-109*		"	"	"	"	*S-GC*

SunStar Laboratories, Inc.

Daniel J Chávez

Daniel Chavez, Project Manager

The results in this report apply to the samples analyzed in accordance with the chain of custody document. This analytical report must be reproduced in its entirety.

SunStar Laboratories, Inc.
Providing Quality Analytical Services Nationwide

25712 Commercentre Drive
Lake Forest, California 92630
949.297.5020 Phone
949.297.5027 Fax

Murex	Project: Cenco	
2640 Walnut Ave. Unit F	Project Number: 1003-001-300	**Reported:**
Tustin CA, 92780	Project Manager: Jeremy Squire	02/09/11 14:52

LL_MW107A_020311

T110112-02 (Water)

Analyte	Result	Reporting Limit	Units	Dilution	Batch	Prepared	Analyzed	Method	Notes
SunStar Laboratories, Inc.									
Purgeable Petroleum Hydrocarbons by EPA 8015C									
C6-C12 (GRO)	**740**	50	ug/l	1	1020408	02/04/11	02/07/11	EPA 8015C	
Surrogate 4-Bromofluorobenzene		*97.8 %*	*72.6-146*		"	"	"	"	
Volatile Organic Compounds by EPA Method 8260B									
Bromobenzene	ND	1.0	ug/l	1	1020407	02/04/11	02/05/11	EPA 8260B	
Bromochloromethane	ND	1.0	"	"	"	"	"	"	
Bromodichloromethane	ND	1.0	"	"	"	"	"	"	
Bromoform	ND	1.0	"	"	"	"	"	"	
Bromomethane	ND	1.0	"	"	"	"	"	"	
n-Butylbenzene	ND	1.0	"	"	"	"	"	"	
sec-Butylbenzene	**2.0**	1.0	"	"	"	"	"	"	
tert-Butylbenzene	ND	1.0	"	"	"	"	"	"	
Carbon tetrachloride	ND	0.50	"	"	"	"	"	"	
Chlorobenzene	ND	1.0	"	"	"	"	"	"	
Chloroethane	ND	1.0	"	"	"	"	"	"	
Chloroform	ND	1.0	"	"	"	"	"	"	
Chloromethane	ND	1.0	"	"	"	"	"	"	
2-Chlorotoluene	ND	1.0	"	"	"	"	"	"	
4-Chlorotoluene	ND	1.0	"	"	"	"	"	"	
Dibromochloromethane	ND	1.0	"	"	"	"	"	"	
1,2-Dibromo-3-chloropropane	ND	1.0	"	"	"	"	"	"	
1,2-Dibromoethane (EDB)	ND	1.0	"	"	"	"	"	"	
Dibromomethane	ND	1.0	"	"	"	"	"	"	
1,2-Dichlorobenzene	ND	1.0	"	"	"	"	"	"	
1,3-Dichlorobenzene	ND	1.0	"	"	"	"	"	"	
1,4-Dichlorobenzene	ND	1.0	"	"	"	"	"	"	
Dichlorodifluoromethane	ND	0.50	"	"	"	"	"	"	
1,1-Dichloroethane	ND	1.0	"	"	"	"	"	"	
1,2-Dichloroethane	ND	0.50	"	"	"	"	"	"	
1,1-Dichloroethene	ND	1.0	"	"	"	"	"	"	
cis-1,2-Dichloroethene	**3.2**	1.0	"	"	"	"	"	"	
trans-1,2-Dichloroethene	**2.4**	1.0	"	"	"	"	"	"	
1,2-Dichloropropane	ND	1.0	"	"	"	"	"	"	

SunStar Laboratories, Inc.

The results in this report apply to the samples analyzed in accordance with the chain of custody document. This analytical report must be reproduced in its entirety.

Daniel Chavez, Project Manager

SunStar Laboratories, Inc.
Providing Quality Analytical Services Nationwide

25712 Commercentre Drive
Lake Forest, California 92630
949.297.5020 Phone
949.297.5027 Fax

Murex	Project: Cenco	
2640 Walnut Ave. Unit F	Project Number: 1003-001-300	**Reported:**
Tustin CA, 92780	Project Manager: Jeremy Squire	02/09/11 14:52

LL_MW107A_020311

T110112-02 (Water)

SunStar Laboratories, Inc.

Volatile Organic Compounds by EPA Method 8260B

Analyte	Result	Reporting Limit	Units	Dilution	Batch	Prepared	Analyzed	Method	Notes
1,3-Dichloropropane	ND	1.0	ug/l	1	1020407	02/04/11	02/05/11	EPA 8260B	
2,2-Dichloropropane	ND	1.0	"	"	"	"	"	"	
1,1-Dichloropropene	ND	1.0	"	"	"	"	"	"	
cis-1,3-Dichloropropene	ND	0.50	"	"	"	"	"	"	
trans-1,3-Dichloropropene	ND	0.50	"	"	"	"	"	"	
Hexachlorobutadiene	ND	1.0	"	"	"	"	"	"	
Isopropylbenzene	**15**	1.0	"	"	"	"	"	"	
p-Isopropyltoluene	ND	1.0	"	"	"	"	"	"	
Methylene chloride	ND	1.0	"	"	"	"	"	"	
Naphthalene	**1.2**	1.0	"	"	"	"	"	"	
n-Propylbenzene	**14**	1.0	"	"	"	"	"	"	
Styrene	ND	1.0	"	"	"	"	"	"	
1,1,2,2-Tetrachloroethane	ND	1.0	"	"	"	"	"	"	
1,1,1,2-Tetrachloroethane	ND	1.0	"	"	"	"	"	"	
Tetrachloroethene	ND	1.0	"	"	"	"	"	"	
1,2,3-Trichlorobenzene	ND	1.0	"	"	"	"	"	"	
1,2,4-Trichlorobenzene	ND	1.0	"	"	"	"	"	"	
1,1,2-Trichloroethane	ND	1.0	"	"	"	"	"	"	
1,1,1-Trichloroethane	ND	1.0	"	"	"	"	"	"	
Trichloroethene	**3.3**	1.0	"	"	"	"	"	"	
Trichlorofluoromethane	ND	1.0	"	"	"	"	"	"	
1,2,3-Trichloropropane	ND	1.0	"	"	"	"	"	"	
1,3,5-Trimethylbenzene	ND	1.0	"	"	"	"	"	"	
1,2,4-Trimethylbenzene	ND	1.0	"	"	"	"	"	"	
Vinyl chloride	ND	1.0	"	"	"	"	"	"	
Benzene	**4.1**	0.50	"	"	"	"	"	"	
Toluene	**2.2**	0.50	"	"	"	"	"	"	
Ethylbenzene	**3.2**	0.50	"	"	"	"	"	"	
m,p-Xylene	**14**	1.0	"	"	"	"	"	"	
o-Xylene	ND	0.50	"	"	"	"	"	"	
Tert-amyl methyl ether	ND	2.0	"	"	"	"	"	"	
Tert-butyl alcohol	ND	10	"	"	"	"	"	"	

SunStar Laboratories, Inc.

The results in this report apply to the samples analyzed in accordance with the chain of custody document. This analytical report must be reproduced in its entirety.

Daniel Chavez, Project Manager

SunStar Laboratories, Inc.
PROVIDING QUALITY ANALYTICAL SERVICES NATIONWIDE

25712 Commercentre Drive
Lake Forest, California 92630
949.297.5020 Phone
949.297.5027 Fax

Murex	Project: Cenco	
2640 Walnut Ave. Unit F	Project Number: 1003-001-300	**Reported:**
Tustin CA, 92780	Project Manager: Jeremy Squire	02/09/11 14:52

LL_MW107A_020311

T110112-02 (Water)

Analyte	Result	Reporting Limit	Units	Dilution	Batch	Prepared	Analyzed	Method	Notes
SunStar Laboratories, Inc.									
Volatile Organic Compounds by EPA Method 8260B									
Di-isopropyl ether	ND	2.0	ug/l	1	1020407	02/04/11	02/05/11	EPA 8260B	
Ethyl tert-butyl ether	ND	2.0	"	"	"	"	"	"	
Methyl tert-butyl ether	ND	1.0	"	"	"	"	"	"	
1,1,2-trichloro-1,2,2-trifluoroethane (CFC 113)	ND	5.0	"	"	"	"	"	"	
Surrogate 4-Bromofluorobenzene		*126 %*	*77.1-110*		"	"	"	"	*S-GC*
Surrogate Dibromofluoromethane		*81.0 %*	*66.3-111*		"	"	"	"	
Surrogate Toluene-d8		*107 %*	*84.7-109*		"	"	"	"	

SunStar Laboratories, Inc.

The results in this report apply to the samples analyzed in accordance with the chain of custody document. This analytical report must be reproduced in its entirety.

Daniel Chavez, Project Manager

SunStar Laboratories, Inc.
Providing Quality Analytical Services Nationwide

25712 Commercentre Drive
Lake Forest, California 92630
949.297.5020 Phone
949.297.5027 Fax

Murex	Project: Cenco	
2640 Walnut Ave. Unit F	Project Number: 1003-001-300	**Reported:**
Tustin CA, 92780	Project Manager: Jeremy Squire	02/09/11 14:52

LL_EW1_020311_01

T110112-03 (Water)

Analyte	Result	Reporting Limit	Units	Dilution	Batch	Prepared	Analyzed	Method	Notes
SunStar Laboratories, Inc.									
Purgeable Petroleum Hydrocarbons by EPA 8015C									
C6-C12 (GRO)	**4500**	50	ug/l	1	1020408	02/04/11	02/07/11	EPA 8015C	
Surrogate 4-Bromofluorobenzene		*87.5 %*	*72.6-146*		"	"	"	"	
Volatile Organic Compounds by EPA Method 8260B									
Bromobenzene	ND	1.0	ug/l	1	1020407	02/04/11	02/05/11	EPA 8260B	
Bromochloromethane	ND	1.0	"	"	"	"	"	"	
Bromodichloromethane	ND	1.0	"	"	"	"	"	"	
Bromoform	ND	1.0	"	"	"	"	"	"	
Bromomethane	ND	1.0	"	"	"	"	"	"	
n-Butylbenzene	**27**	1.0	"	"	"	"	"	"	
sec-Butylbenzene	**30**	1.0	"	"	"	"	"	"	
tert-Butylbenzene	**4.0**	1.0	"	"	"	"	"	"	
Carbon tetrachloride	ND	0.50	"	"	"	"	"	"	
Chlorobenzene	ND	1.0	"	"	"	"	"	"	
Chloroethane	ND	1.0	"	"	"	"	"	"	
Chloroform	ND	1.0	"	"	"	"	"	"	
Chloromethane	ND	1.0	"	"	"	"	"	"	
2-Chlorotoluene	ND	1.0	"	"	"	"	"	"	
4-Chlorotoluene	ND	1.0	"	"	"	"	"	"	
Dibromochloromethane	ND	1.0	"	"	"	"	"	"	
1,2-Dibromo-3-chloropropane	ND	1.0	"	"	"	"	"	"	
1,2-Dibromoethane (EDB)	ND	1.0	"	"	"	"	"	"	
Dibromomethane	ND	1.0	"	"	"	"	"	"	
1,2-Dichlorobenzene	ND	1.0	"	"	"	"	"	"	
1,3-Dichlorobenzene	ND	1.0	"	"	"	"	"	"	
1,4-Dichlorobenzene	ND	1.0	"	"	"	"	"	"	
Dichlorodifluoromethane	ND	0.50	"	"	"	"	"	"	
1,1-Dichloroethane	ND	1.0	"	"	"	"	"	"	
1,2-Dichloroethane	ND	0.50	"	"	"	"	"	"	
1,1-Dichloroethene	ND	1.0	"	"	"	"	"	"	
cis-1,2-Dichloroethene	**4.0**	1.0	"	"	"	"	"	"	
trans-1,2-Dichloroethene	**5.9**	1.0	"	"	"	"	"	"	
1,2-Dichloropropane	ND	1.0	"	"	"	"	"	"	

SunStar Laboratories, Inc.

The results in this report apply to the samples analyzed in accordance with the chain of custody document. This analytical report must be reproduced in its entirety.

Daniel Chavez, Project Manager

SunStar Laboratories, Inc.
Providing Quality Analytical Services Nationwide

25712 Commercentre Drive
Lake Forest, California 92630
949.297.5020 Phone
949.297.5027 Fax

Murex	Project: Cenco	
2640 Walnut Ave. Unit F	Project Number: 1003-001-300	**Reported:**
Tustin CA, 92780	Project Manager: Jeremy Squire	02/09/11 14:52

LL_EW1_020311_01

T110112-03 (Water)

Analyte	Result	Reporting Limit	Units	Dilution	Batch	Prepared	Analyzed	Method	Notes
SunStar Laboratories, Inc.									
Volatile Organic Compounds by EPA Method 8260B									
1,3-Dichloropropane	ND	1.0	ug/l	1	1020407	02/04/11	02/05/11	EPA 8260B	
2,2-Dichloropropane	ND	1.0	"	"	"	"	"	"	
1,1-Dichloropropene	ND	1.0	"	"	"	"	"	"	
cis-1,3-Dichloropropene	ND	0.50	"	"	"	"	"	"	
trans-1,3-Dichloropropene	ND	0.50	"	"	"	"	"	"	
Hexachlorobutadiene	ND	1.0	"	"	"	"	"	"	
Isopropylbenzene	**100**	1.0	"	"	"	"	"	"	
p-Isopropyltoluene	**3.5**	1.0	"	"	"	"	"	"	
Methylene chloride	ND	1.0	"	"	"	"	"	"	
Naphthalene	**42**	1.0	"	"	"	"	"	"	
n-Propylbenzene	**95**	1.0	"	"	"	"	"	"	
Styrene	ND	1.0	"	"	"	"	"	"	
1,1,2,2-Tetrachloroethane	**8.0**	1.0	"	"	"	"	"	"	
1,1,1,2-Tetrachloroethane	ND	1.0	"	"	"	"	"	"	
Tetrachloroethene	ND	1.0	"	"	"	"	"	"	
1,2,3-Trichlorobenzene	ND	1.0	"	"	"	"	"	"	
1,2,4-Trichlorobenzene	ND	1.0	"	"	"	"	"	"	
1,1,2-Trichloroethane	ND	1.0	"	"	"	"	"	"	
1,1,1-Trichloroethane	ND	1.0	"	"	"	"	"	"	
Trichloroethene	**1.3**	1.0	"	"	"	"	"	"	
Trichlorofluoromethane	ND	1.0	"	"	"	"	"	"	
1,2,3-Trichloropropane	ND	1.0	"	"	"	"	"	"	
1,3,5-Trimethylbenzene	ND	1.0	"	"	"	"	"	"	
1,2,4-Trimethylbenzene	ND	1.0	"	"	"	"	"	"	
Vinyl chloride	ND	1.0	"	"	"	"	"	"	
Benzene	**20**	0.50	"	"	"	"	"	"	
Toluene	**1.5**	0.50	"	"	"	"	"	"	
Ethylbenzene	**27**	0.50	"	"	"	"	"	"	
m,p-Xylene	**13**	1.0	"	"	"	"	"	"	
o-Xylene	ND	0.50	"	"	"	"	"	"	
Tert-amyl methyl ether	ND	2.0	"	"	"	"	"	"	
Tert-butyl alcohol	ND	10	"	"	"	"	"	"	
Di-isopropyl ether	ND	2.0	"	"	"	"	"	"	

SunStar Laboratories, Inc.

Daniel Chavez, Project Manager

The results in this report apply to the samples analyzed in accordance with the chain of custody document. This analytical report must be reproduced in its entirety.

SunStar Laboratories, Inc.
PROVIDING QUALITY ANALYTICAL SERVICES NATIONWIDE

25712 Commercentre Drive
Lake Forest, California 92630
949.297.5020 Phone
949.297.5027 Fax

Murex	Project: Cenco	
2640 Walnut Ave. Unit F	Project Number: 1003-001-300	**Reported:**
Tustin CA, 92780	Project Manager: Jeremy Squire	02/09/11 14:52

LL_EW1_020311_01

T110112-03 (Water)

Analyte	Result	Reporting Limit	Units	Dilution	Batch	Prepared	Analyzed	Method	Notes
SunStar Laboratories, Inc.									
Volatile Organic Compounds by EPA Method 8260B									
Ethyl tert-butyl ether	ND	2.0	ug/l	1	1020407	02/04/11	02/05/11	EPA 8260B	
Methyl tert-butyl ether	ND	1.0	"	"	"	"	"	"	
1,1,2-trichloro-1,2,2-trifluoroethane (CFC 113)	ND	5.0	"	"	"	"	"	"	
Surrogate 4-Bromofluorobenzene		*336 %*	*77.1-110*		"	"	"	"	*S-GC*
Surrogate Dibromofluoromethane		*78.4 %*	*66.3-111*		"	"	"	"	
Surrogate Toluene-d8		*109 %*	*84.7-109*		"	"	"	"	

SunStar Laboratories, Inc.

The results in this report apply to the samples analyzed in accordance with the chain of custody document. This analytical report must be reproduced in its entirety.

Daniel Chavez, Project Manager

SunStar Laboratories, Inc.
Providing Quality Analytical Services Nationwide

25712 Commercentre Drive
Lake Forest, California 92630
949.297.5020 Phone
949.297.5027 Fax

Murex	Project: Cenco	
2640 Walnut Ave. Unit F	Project Number: 1003-001-300	**Reported:**
Tustin CA, 92780	Project Manager: Jeremy Squire	02/09/11 14:52

LL_EW1_020311_02

T110112-04 (Water)

Analyte	Result	Reporting Limit	Units	Dilution	Batch	Prepared	Analyzed	Method	Notes
SunStar Laboratories, Inc.									
Purgeable Petroleum Hydrocarbons by EPA 8015C									
C6-C12 (GRO)	**4200**	50	ug/l	1	1020408	02/04/11	02/07/11	EPA 8015C	
Surrogate 4-Bromofluorobenzene		*138 %*	*72.6-146*		"	"	"	"	
Volatile Organic Compounds by EPA Method 8260B									
Bromobenzene	ND	1.0	ug/l	1	1020407	02/04/11	02/05/11	EPA 8260B	
Bromochloromethane	ND	1.0	"	"	"	"	"	"	
Bromodichloromethane	ND	1.0	"	"	"	"	"	"	
Bromoform	ND	1.0	"	"	"	"	"	"	
Bromomethane	ND	1.0	"	"	"	"	"	"	
n-Butylbenzene	**10**	1.0	"	"	"	"	"	"	
sec-Butylbenzene	**31**	1.0	"	"	"	"	"	"	
tert-Butylbenzene	**4.1**	1.0	"	"	"	"	"	"	
Carbon tetrachloride	ND	0.50	"	"	"	"	"	"	
Chlorobenzene	ND	1.0	"	"	"	"	"	"	
Chloroethane	ND	1.0	"	"	"	"	"	"	
Chloroform	ND	1.0	"	"	"	"	"	"	
Chloromethane	ND	1.0	"	"	"	"	"	"	
2-Chlorotoluene	ND	1.0	"	"	"	"	"	"	
4-Chlorotoluene	ND	1.0	"	"	"	"	"	"	
Dibromochloromethane	ND	1.0	"	"	"	"	"	"	
1,2-Dibromo-3-chloropropane	ND	1.0	"	"	"	"	"	"	
1,2-Dibromoethane (EDB)	ND	1.0	"	"	"	"	"	"	
Dibromomethane	ND	1.0	"	"	"	"	"	"	
1,2-Dichlorobenzene	ND	1.0	"	"	"	"	"	"	
1,3-Dichlorobenzene	ND	1.0	"	"	"	"	"	"	
1,4-Dichlorobenzene	ND	1.0	"	"	"	"	"	"	
Dichlorodifluoromethane	ND	0.50	"	"	"	"	"	"	
1,1-Dichloroethane	ND	1.0	"	"	"	"	"	"	
1,2-Dichloroethane	ND	0.50	"	"	"	"	"	"	
1,1-Dichloroethene	ND	1.0	"	"	"	"	"	"	
cis-1,2-Dichloroethene	**3.5**	1.0	"	"	"	"	"	"	
trans-1,2-Dichloroethene	**5.1**	1.0	"	"	"	"	"	"	
1,2-Dichloropropane	ND	1.0	"	"	"	"	"	"	

SunStar Laboratories, Inc.

The results in this report apply to the samples analyzed in accordance with the chain of custody document. This analytical report must be reproduced in its entirety.

Daniel Chavez, Project Manager

SunStar Laboratories, Inc.
Providing Quality Analytical Services Nationwide

25712 Commercentre Drive
Lake Forest, California 92630
949.297.5020 Phone
949.297.5027 Fax

Murex	Project: Cenco	
2640 Walnut Ave. Unit F	Project Number: 1003-001-300	**Reported:**
Tustin CA, 92780	Project Manager: Jeremy Squire	02/09/11 14:52

LL_EW1_020311_02

T110112-04 (Water)

SunStar Laboratories, Inc.

Volatile Organic Compounds by EPA Method 8260B

Analyte	Result	Reporting Limit	Units	Dilution	Batch	Prepared	Analyzed	Method	Notes
1,3-Dichloropropane	ND	1.0	ug/l	1	1020407	02/04/11	02/05/11	EPA 8260B	
2,2-Dichloropropane	ND	1.0	"	"	"	"	"	"	
1,1-Dichloropropene	ND	1.0	"	"	"	"	"	"	
cis-1,3-Dichloropropene	ND	0.50	"	"	"	"	"	"	
trans-1,3-Dichloropropene	ND	0.50	"	"	"	"	"	"	
Hexachlorobutadiene	ND	1.0	"	"	"	"	"	"	
Isopropylbenzene	**100**	1.0	"	"	"	"	"	"	
p-Isopropyltoluene	**1.4**	1.0	"	"	"	"	"	"	
Methylene chloride	ND	1.0	"	"	"	"	"	"	
Naphthalene	**22**	1.0	"	"	"	"	"	"	
n-Propylbenzene	**100**	1.0	"	"	"	"	"	"	
Styrene	ND	1.0	"	"	"	"	"	"	
1,1,2,2-Tetrachloroethane	**9.5**	1.0	"	"	"	"	"	"	
1,1,1,2-Tetrachloroethane	ND	1.0	"	"	"	"	"	"	
Tetrachloroethene	ND	1.0	"	"	"	"	"	"	
1,2,3-Trichlorobenzene	ND	1.0	"	"	"	"	"	"	
1,2,4-Trichlorobenzene	ND	1.0	"	"	"	"	"	"	
1,1,2-Trichloroethane	ND	1.0	"	"	"	"	"	"	
1,1,1-Trichloroethane	ND	1.0	"	"	"	"	"	"	
Trichloroethene	**1.1**	1.0	"	"	"	"	"	"	
Trichlorofluoromethane	ND	1.0	"	"	"	"	"	"	
1,2,3-Trichloropropane	ND	1.0	"	"	"	"	"	"	
1,3,5-Trimethylbenzene	ND	1.0	"	"	"	"	"	"	
1,2,4-Trimethylbenzene	ND	1.0	"	"	"	"	"	"	
Vinyl chloride	ND	1.0	"	"	"	"	"	"	
Benzene	**20**	0.50	"	"	"	"	"	"	
Toluene	**1.4**	0.50	"	"	"	"	"	"	
Ethylbenzene	**27**	0.50	"	"	"	"	"	"	
m,p-Xylene	**13**	1.0	"	"	"	"	"	"	
o-Xylene	ND	0.50	"	"	"	"	"	"	
Tert-amyl methyl ether	ND	2.0	"	"	"	"	"	"	
Tert-butyl alcohol	ND	10	"	"	"	"	"	"	
Di-isopropyl ether	ND	2.0	"	"	"	"	"	"	

SunStar Laboratories, Inc.

The results in this report apply to the samples analyzed in accordance with the chain of custody document. This analytical report must be reproduced in its entirety.

Daniel Chavez, Project Manager

SunStar Laboratories, Inc.
PROVIDING QUALITY ANALYTICAL SERVICES NATIONWIDE

25712 Commercentre Drive
Lake Forest, California 92630
949.297.5020 Phone
949.297.5027 Fax

Murex	Project: Cenco	
2640 Walnut Ave. Unit F	Project Number: 1003-001-300	**Reported:**
Tustin CA, 92780	Project Manager: Jeremy Squire	02/09/11 14:52

LL_EW1_020311_02

T110112-04 (Water)

Analyte	Result	Reporting Limit	Units	Dilution	Batch	Prepared	Analyzed	Method	Notes
SunStar Laboratories, Inc.									
Volatile Organic Compounds by EPA Method 8260B									
Ethyl tert-butyl ether	ND	2.0	ug/l	1	1020407	02/04/11	02/05/11	EPA 8260B	
Methyl tert-butyl ether	ND	1.0	"	"	"	"	"	"	
1,1,2-trichloro-1,2,2-trifluoroethane (CFC 113)	ND	5.0	"	"	"	"	"	"	
Surrogate 4-Bromofluorobenzene		*406 %*	*77.1-110*		"	"	"	"	*S-GC*
Surrogate Dibromofluoromethane		*80.1 %*	*66.3-111*		"	"	"	"	
Surrogate Toluene-d8		*115 %*	*84.7-109*		"	"	"	"	*S-GC*

SunStar Laboratories, Inc.

The results in this report apply to the samples analyzed in accordance with the chain of custody document. This analytical report must be reproduced in its entirety.

Daniel Chavez, Project Manager

SunStar Laboratories, Inc.
Providing Quality Analytical Services Nationwide

25712 Commercentre Drive
Lake Forest, California 92630
949.297.5020 Phone
949.297.5027 Fax

Murex	Project: Cenco	
2640 Walnut Ave. Unit F	Project Number: 1003-001-300	**Reported:**
Tustin CA, 92780	Project Manager: Jeremy Squire	02/09/11 14:52

LL_MW106A_020311

T110112-05 (Water)

Analyte	Result	Reporting Limit	Units	Dilution	Batch	Prepared	Analyzed	Method	Notes
SunStar Laboratories, Inc.									
Purgeable Petroleum Hydrocarbons by EPA 8015C									
C6-C12 (GRO)	**570**	50	ug/l	1	1020408	02/04/11	02/07/11	EPA 8015C	
Surrogate 4-Bromofluorobenzene		*105 %*	*72.6-146*		"	"	"	"	
Volatile Organic Compounds by EPA Method 8260B									
Bromobenzene	ND	1.0	ug/l	1	1020407	02/04/11	02/05/11	EPA 8260B	
Bromochloromethane	ND	1.0	"	"	"	"	"	"	
Bromodichloromethane	ND	1.0	"	"	"	"	"	"	
Bromoform	ND	1.0	"	"	"	"	"	"	
Bromomethane	ND	1.0	"	"	"	"	"	"	
n-Butylbenzene	ND	1.0	"	"	"	"	"	"	
sec-Butylbenzene	**1.6**	1.0	"	"	"	"	"	"	
tert-Butylbenzene	ND	1.0	"	"	"	"	"	"	
Carbon tetrachloride	ND	0.50	"	"	"	"	"	"	
Chlorobenzene	ND	1.0	"	"	"	"	"	"	
Chloroethane	ND	1.0	"	"	"	"	"	"	
Chloroform	ND	1.0	"	"	"	"	"	"	
Chloromethane	ND	1.0	"	"	"	"	"	"	
2-Chlorotoluene	ND	1.0	"	"	"	"	"	"	
4-Chlorotoluene	ND	1.0	"	"	"	"	"	"	
Dibromochloromethane	ND	1.0	"	"	"	"	"	"	
1,2-Dibromo-3-chloropropane	ND	1.0	"	"	"	"	"	"	
1,2-Dibromoethane (EDB)	ND	1.0	"	"	"	"	"	"	
Dibromomethane	ND	1.0	"	"	"	"	"	"	
1,2-Dichlorobenzene	ND	1.0	"	"	"	"	"	"	
1,3-Dichlorobenzene	ND	1.0	"	"	"	"	"	"	
1,4-Dichlorobenzene	ND	1.0	"	"	"	"	"	"	
Dichlorodifluoromethane	ND	0.50	"	"	"	"	"	"	
1,1-Dichloroethane	ND	1.0	"	"	"	"	"	"	
1,2-Dichloroethane	ND	0.50	"	"	"	"	"	"	
1,1-Dichloroethene	ND	1.0	"	"	"	"	"	"	
cis-1,2-Dichloroethene	ND	1.0	"	"	"	"	"	"	
trans-1,2-Dichloroethene	ND	1.0	"	"	"	"	"	"	
1,2-Dichloropropane	ND	1.0	"	"	"	"	"	"	

SunStar Laboratories, Inc.

The results in this report apply to the samples analyzed in accordance with the chain of custody document. This analytical report must be reproduced in its entirety.

Daniel Chavez, Project Manager

SunStar Laboratories, Inc.
Providing Quality Analytical Services Nationwide

25712 Commercentre Drive
Lake Forest, California 92630
949.297.5020 Phone
949.297.5027 Fax

Murex	Project: Cenco	
2640 Walnut Ave. Unit F	Project Number: 1003-001-300	**Reported:**
Tustin CA, 92780	Project Manager: Jeremy Squire	02/09/11 14:52

LL_MW106A_020311

T110112-05 (Water)

SunStar Laboratories, Inc.

Volatile Organic Compounds by EPA Method 8260B

Analyte	Result	Reporting Limit	Units	Dilution	Batch	Prepared	Analyzed	Method	Notes
1,3-Dichloropropane	ND	1.0	ug/l	1	1020407	02/04/11	02/05/11	EPA 8260B	
2,2-Dichloropropane	ND	1.0	"	"	"	"	"	"	
1,1-Dichloropropene	ND	1.0	"	"	"	"	"	"	
cis-1,3-Dichloropropene	ND	0.50	"	"	"	"	"	"	
trans-1,3-Dichloropropene	ND	0.50	"	"	"	"	"	"	
Hexachlorobutadiene	ND	1.0	"	"	"	"	"	"	
Isopropylbenzene	**7.7**	1.0	"	"	"	"	"	"	
p-Isopropyltoluene	ND	1.0	"	"	"	"	"	"	
Methylene chloride	ND	1.0	"	"	"	"	"	"	
Naphthalene	ND	1.0	"	"	"	"	"	"	
n-Propylbenzene	**1.1**	1.0	"	"	"	"	"	"	
Styrene	ND	1.0	"	"	"	"	"	"	
1,1,2,2-Tetrachloroethane	ND	1.0	"	"	"	"	"	"	
1,1,1,2-Tetrachloroethane	ND	1.0	"	"	"	"	"	"	
Tetrachloroethene	ND	1.0	"	"	"	"	"	"	
1,2,3-Trichlorobenzene	ND	1.0	"	"	"	"	"	"	
1,2,4-Trichlorobenzene	ND	1.0	"	"	"	"	"	"	
1,1,2-Trichloroethane	ND	1.0	"	"	"	"	"	"	
1,1,1-Trichloroethane	ND	1.0	"	"	"	"	"	"	
Trichloroethene	ND	1.0	"	"	"	"	"	"	
Trichlorofluoromethane	ND	1.0	"	"	"	"	"	"	
1,2,3-Trichloropropane	ND	1.0	"	"	"	"	"	"	
1,3,5-Trimethylbenzene	ND	1.0	"	"	"	"	"	"	
1,2,4-Trimethylbenzene	ND	1.0	"	"	"	"	"	"	
Vinyl chloride	ND	1.0	"	"	"	"	"	"	
Benzene	ND	0.50	"	"	"	"	"	"	
Toluene	ND	0.50	"	"	"	"	"	"	
Ethylbenzene	ND	0.50	"	"	"	"	"	"	
m,p-Xylene	ND	1.0	"	"	"	"	"	"	
o-Xylene	ND	0.50	"	"	"	"	"	"	
Tert-amyl methyl ether	ND	2.0	"	"	"	"	"	"	
Tert-butyl alcohol	ND	10	"	"	"	"	"	"	

SunStar Laboratories, Inc.

The results in this report apply to the samples analyzed in accordance with the chain of custody document. This analytical report must be reproduced in its entirety.

Daniel Chavez, Project Manager

SunStar Laboratories, Inc.
Providing Quality Analytical Services Nationwide

25712 Commercentre Drive
Lake Forest, California 92630
949.297.5020 Phone
949.297.5027 Fax

Murex	Project: Cenco	
2640 Walnut Ave. Unit F	Project Number: 1003-001-300	**Reported:**
Tustin CA, 92780	Project Manager: Jeremy Squire	02/09/11 14:52

LL_MW106A_020311

T110112-05 (Water)

Analyte	Result	Reporting Limit	Units	Dilution	Batch	Prepared	Analyzed	Method	Notes
SunStar Laboratories, Inc.									
Volatile Organic Compounds by EPA Method 8260B									
Di-isopropyl ether	ND	2.0	ug/l	1	1020407	02/04/11	02/05/11	EPA 8260B	
Ethyl tert-butyl ether	ND	2.0	"	"	"	"	"	"	
Methyl tert-butyl ether	ND	1.0	"	"	"	"	"	"	
1,1,2-trichloro-1,2,2-trifluoroethane (CFC 113)	ND	5.0	"	"	"	"	"	"	
Surrogate 4-Bromofluorobenzene		*201 %*		*77.1-110*	"	"	"	"	*S-GC*
Surrogate Dibromofluoromethane		*79.4 %*		*66.3-111*	"	"	"	"	
Surrogate Toluene-d8		*110 %*		*84.7-109*	"	"	"	"	*S-GC*

SunStar Laboratories, Inc.

The results in this report apply to the samples analyzed in accordance with the chain of custody document. This analytical report must be reproduced in its entirety.

Daniel Chavez, Project Manager

SunStar Laboratories, Inc.
Providing Quality Analytical Services Nationwide

25712 Commercentre Drive
Lake Forest, California 92630
949.297.5020 Phone
949.297.5027 Fax

Murex	Project: Cenco	
2640 Walnut Ave. Unit F	Project Number: 1003-001-300	**Reported:**
Tustin CA, 92780	Project Manager: Jeremy Squire	02/09/11 14:52

TB_020311

T110112-06 (Water)

Analyte	Result	Reporting Limit	Units	Dilution	Batch	Prepared	Analyzed	Method	Notes
SunStar Laboratories, Inc.									
Volatile Organic Compounds by EPA Method 8260B									
Bromobenzene	ND	1.0	ug/l	1	1020407	02/04/11	02/05/11	EPA 8260B	
Bromochloromethane	ND	1.0	"	"	"	"	"	"	
Bromodichloromethane	ND	1.0	"	"	"	"	"	"	
Bromoform	ND	1.0	"	"	"	"	"	"	
Bromomethane	ND	1.0	"	"	"	"	"	"	
n-Butylbenzene	ND	1.0	"	"	"	"	"	"	
sec-Butylbenzene	ND	1.0	"	"	"	"	"	"	
tert-Butylbenzene	ND	1.0	"	"	"	"	"	"	
Carbon tetrachloride	ND	0.50	"	"	"	"	"	"	
Chlorobenzene	ND	1.0	"	"	"	"	"	"	
Chloroethane	ND	1.0	"	"	"	"	"	"	
Chloroform	ND	1.0	"	"	"	"	"	"	
Chloromethane	ND	1.0	"	"	"	"	"	"	
2-Chlorotoluene	ND	1.0	"	"	"	"	"	"	
4-Chlorotoluene	ND	1.0	"	"	"	"	"	"	
Dibromochloromethane	ND	1.0	"	"	"	"	"	"	
1,2-Dibromo-3-chloropropane	ND	1.0	"	"	"	"	"	"	
1,2-Dibromoethane (EDB)	ND	1.0	"	"	"	"	"	"	
Dibromomethane	ND	1.0	"	"	"	"	"	"	
1,2-Dichlorobenzene	ND	1.0	"	"	"	"	"	"	
1,3-Dichlorobenzene	ND	1.0	"	"	"	"	"	"	
1,4-Dichlorobenzene	ND	1.0	"	"	"	"	"	"	
Dichlorodifluoromethane	ND	0.50	"	"	"	"	"	"	
1,1-Dichloroethane	ND	1.0	"	"	"	"	"	"	
1,2-Dichloroethane	ND	0.50	"	"	"	"	"	"	
1,1-Dichloroethene	ND	1.0	"	"	"	"	"	"	
cis-1,2-Dichloroethene	ND	1.0	"	"	"	"	"	"	
trans-1,2-Dichloroethene	ND	1.0	"	"	"	"	"	"	
1,2-Dichloropropane	ND	1.0	"	"	"	"	"	"	
1,3-Dichloropropane	ND	1.0	"	"	"	"	"	"	
2,2-Dichloropropane	ND	1.0	"	"	"	"	"	"	
1,1-Dichloropropene	ND	1.0	"	"	"	"	"	"	

SunStar Laboratories, Inc.

The results in this report apply to the samples analyzed in accordance with the chain of custody document. This analytical report must be reproduced in its entirety.

Daniel Chavez, Project Manager

SunStar Laboratories, Inc.
Providing Quality Analytical Services Nationwide

25712 Commercentre Drive
Lake Forest, California 92630
949.297.5020 Phone
949.297.5027 Fax

Murex	Project: Cenco	
2640 Walnut Ave. Unit F	Project Number: 1003-001-300	**Reported:**
Tustin CA, 92780	Project Manager: Jeremy Squire	02/09/11 14:52

TB_020311

T110112-06 (Water)

Analyte	Result	Reporting Limit	Units	Dilution	Batch	Prepared	Analyzed	Method	Notes
SunStar Laboratories, Inc.									
Volatile Organic Compounds by EPA Method 8260B									
cis-1,3-Dichloropropene	ND	0.50	ug/l	1	1020407	02/04/11	02/05/11	EPA 8260B	
trans-1,3-Dichloropropene	ND	0.50	"	"	"	"	"	"	
Hexachlorobutadiene	ND	1.0	"	"	"	"	"	"	
Isopropylbenzene	ND	1.0	"	"	"	"	"	"	
p-Isopropyltoluene	ND	1.0	"	"	"	"	"	"	
Methylene chloride	ND	1.0	"	"	"	"	"	"	
Naphthalene	ND	1.0	"	"	"	"	"	"	
n-Propylbenzene	ND	1.0	"	"	"	"	"	"	
Styrene	ND	1.0	"	"	"	"	"	"	
1,1,2,2-Tetrachloroethane	ND	1.0	"	"	"	"	"	"	
1,1,1,2-Tetrachloroethane	ND	1.0	"	"	"	"	"	"	
Tetrachloroethene	ND	1.0	"	"	"	"	"	"	
1,2,3-Trichlorobenzene	ND	1.0	"	"	"	"	"	"	
1,2,4-Trichlorobenzene	ND	1.0	"	"	"	"	"	"	
1,1,2-Trichloroethane	ND	1.0	"	"	"	"	"	"	
1,1,1-Trichloroethane	ND	1.0	"	"	"	"	"	"	
Trichloroethene	ND	1.0	"	"	"	"	"	"	
Trichlorofluoromethane	ND	1.0	"	"	"	"	"	"	
1,2,3-Trichloropropane	ND	1.0	"	"	"	"	"	"	
1,3,5-Trimethylbenzene	ND	1.0	"	"	"	"	"	"	
1,2,4-Trimethylbenzene	ND	1.0	"	"	"	"	"	"	
Vinyl chloride	ND	1.0	"	"	"	"	"	"	
Benzene	ND	0.50	"	"	"	"	"	"	
Toluene	ND	0.50	"	"	"	"	"	"	
Ethylbenzene	ND	0.50	"	"	"	"	"	"	
m,p-Xylene	ND	1.0	"	"	"	"	"	"	
o-Xylene	ND	0.50	"	"	"	"	"	"	
Tert-amyl methyl ether	ND	2.0	"	"	"	"	"	"	
Tert-butyl alcohol	ND	10	"	"	"	"	"	"	
Di-isopropyl ether	ND	2.0	"	"	"	"	"	"	
Ethyl tert-butyl ether	ND	2.0	"	"	"	"	"	"	
Methyl tert-butyl ether	ND	1.0	"	"	"	"	"	"	

SunStar Laboratories, Inc.

The results in this report apply to the samples analyzed in accordance with the chain of custody document. This analytical report must be reproduced in its entirety.

Daniel Chavez, Project Manager

SunStar Laboratories, Inc.
PROVIDING QUALITY ANALYTICAL SERVICES NATIONWIDE

25712 Commercentre Drive
Lake Forest, California 92630
949.297.5020 Phone
949.297.5027 Fax

Murex	Project: Cenco	
2640 Walnut Ave. Unit F	Project Number: 1003-001-300	**Reported:**
Tustin CA, 92780	Project Manager: Jeremy Squire	02/09/11 14:52

TB_020311

T110112-06 (Water)

Analyte	Result	Reporting Limit	Units	Dilution	Batch	Prepared	Analyzed	Method	Notes
SunStar Laboratories, Inc.									
Volatile Organic Compounds by EPA Method 8260B									
1,1,2-trichloro-1,2,2-trifluoroethane (CFC 113)	ND	5.0	ug/l	1	1020407	02/04/11	02/05/11	EPA 8260B	
Surrogate 4-Bromofluorobenzene		*85.2 %*	*77.1-110*		"	"	"	"	
Surrogate Dibromofluoromethane		*81.4 %*	*66.3-111*		"	"	"	"	
Surrogate Toluene-d8		*103 %*	*84.7-109*		"	"	"	"	

SunStar Laboratories, Inc.

The results in this report apply to the samples analyzed in accordance with the chain of custody document. This analytical report must be reproduced in its entirety.

Daniel Chavez, Project Manager

SunStar Laboratories, Inc.
Providing Quality Analytical Services Nationwide

25712 Commercentre Drive
Lake Forest, California 92630
949.297.5020 Phone
949.297.5027 Fax

Murex	Project: Cenco	
2640 Walnut Ave. Unit F	Project Number: 1003-001-300	**Reported:**
Tustin CA, 92780	Project Manager: Jeremy Squire	02/09/11 14:52

Purgeable Petroleum Hydrocarbons by EPA 8015C - Quality Control

SunStar Laboratories, Inc.

Analyte	Result	Reporting Limit	Units	Spike Level	Source Result	%REC	%REC Limits	RPD	RPD Limit	Notes
Batch 1020408 - EPA 5030 GC										
Blank (1020408-BLK1)				Prepared: 02/04/11	Analyzed: 02/07/11					
C6-C12 (GRO)	ND	50	ug/l							
Surrogate 4-Bromofluorobenzene	*169*		*"*	*200*		*84.5*	*72.6-146*			
LCS (1020408-BS1)				Prepared: 02/04/11	Analyzed: 02/07/11					
C6-C12 (GRO)	5140	50	ug/l	5500		93.4	75-125			
Surrogate 4-Bromofluorobenzene	*176*		*"*	*200*		*88.0*	*72.6-146*			
Matrix Spike (1020408-MS1)		**Source: T110112-01**		Prepared: 02/04/11	Analyzed: 02/07/11					
C6-C12 (GRO)	4910	50	ug/l	5500	309	83.7	65-135			
Surrogate 4-Bromofluorobenzene	*285*		*"*	*200*		*142*	*72.6-146*			
Matrix Spike Dup (1020408-MSD1)		**Source: T110112-01**		Prepared: 02/04/11	Analyzed: 02/07/11					
C6-C12 (GRO)	4720	50	ug/l	5500	309	80.1	65-135	4.05	20	
Surrogate 4-Bromofluorobenzene	*221*		*"*	*200*		*110*	*72.6-146*			

SunStar Laboratories, Inc.

The results in this report apply to the samples analyzed in accordance with the chain of custody document. This analytical report must be reproduced in its entirety.

Daniel Chavez, Project Manager

SunStar Laboratories, Inc.
Providing Quality Analytical Services Nationwide

25712 Commercentre Drive
Lake Forest, California 92630
949.297.5020 Phone
949.297.5027 Fax

Murex	Project: Cenco	
2640 Walnut Ave. Unit F	Project Number: 1003-001-300	**Reported:**
Tustin CA, 92780	Project Manager: Jeremy Squire	02/09/11 14:52

Volatile Organic Compounds by EPA Method 8260B - Quality Control

SunStar Laboratories, Inc.

Analyte	Result	Reporting Limit	Units	Spike Level	Source Result	%REC	%REC Limits	RPD	RPD Limit	Notes
Batch 1020407 - EPA 5030 GCMS										
Blank (1020407-BLK1)				Prepared & Analyzed: 02/04/11						
Bromobenzene	ND	1.0	ug/l							
Bromochloromethane	ND	1.0	"							
Bromodichloromethane	ND	1.0	"							
Bromoform	ND	1.0	"							
Bromomethane	ND	1.0	"							
n-Butylbenzene	ND	1.0	"							
sec-Butylbenzene	ND	1.0	"							
tert-Butylbenzene	ND	1.0	"							
Carbon tetrachloride	ND	0.50	"							
Chlorobenzene	ND	1.0	"							
Chloroethane	ND	1.0	"							
Chloroform	ND	1.0	"							
Chloromethane	ND	1.0	"							
2-Chlorotoluene	ND	1.0	"							
4-Chlorotoluene	ND	1.0	"							
Dibromochloromethane	ND	1.0	"							
1,2-Dibromo-3-chloropropane	ND	1.0	"							
1,2-Dibromoethane (EDB)	ND	1.0	"							
Dibromomethane	ND	1.0	"							
1,2-Dichlorobenzene	ND	1.0	"							
1,3-Dichlorobenzene	ND	1.0	"							
1,4-Dichlorobenzene	ND	1.0	"							
Dichlorodifluoromethane	ND	0.50	"							
1,1-Dichloroethane	ND	1.0	"							
1,2-Dichloroethane	ND	0.50	"							
1,1-Dichloroethene	ND	1.0	"							
cis-1,2-Dichloroethene	ND	1.0	"							
trans-1,2-Dichloroethene	ND	1.0	"							
1,2-Dichloropropane	ND	1.0	"							
1,3-Dichloropropane	ND	1.0	"							
2,2-Dichloropropane	ND	1.0	"							
1,1-Dichloropropene	ND	1.0	"							
cis-1,3-Dichloropropene	ND	0.50	"							
trans-1,3-Dichloropropene	ND	0.50	"							
Hexachlorobutadiene	ND	1.0	"							
Isopropylbenzene	ND	1.0	"							

SunStar Laboratories, Inc.

The results in this report apply to the samples analyzed in accordance with the chain of custody document. This analytical report must be reproduced in its entirety.

Daniel Chavez, Project Manager

SunStar Laboratories, Inc.
Providing Quality Analytical Services Nationwide

25712 Commercentre Drive
Lake Forest, California 92630
949.297.5020 Phone
949.297.5027 Fax

Murex	Project: Cenco	
2640 Walnut Ave. Unit F	Project Number: 1003-001-300	**Reported:**
Tustin CA, 92780	Project Manager: Jeremy Squire	02/09/11 14:52

Volatile Organic Compounds by EPA Method 8260B - Quality Control

SunStar Laboratories, Inc.

Analyte	Result	Reporting Limit	Units	Spike Level	Source Result	%REC	%REC Limits	RPD	RPD Limit	Notes
Batch 1020407 - EPA 5030 GCMS										
Blank (1020407-BLK1)				Prepared & Analyzed: 02/04/11						
p-Isopropyltoluene	ND	1.0	ug/l							
Methylene chloride	ND	1.0	"							
Naphthalene	ND	1.0	"							
n-Propylbenzene	ND	1.0	"							
Styrene	ND	1.0	"							
1,1,2,2-Tetrachloroethane	ND	1.0	"							
1,1,1,2-Tetrachloroethane	ND	1.0	"							
Tetrachloroethene	ND	1.0	"							
1,2,3-Trichlorobenzene	ND	1.0	"							
1,2,4-Trichlorobenzene	ND	1.0	"							
1,1,2-Trichloroethane	ND	1.0	"							
1,1,1-Trichloroethane	ND	1.0	"							
Trichloroethene	ND	1.0	"							
Trichlorofluoromethane	ND	1.0	"							
1,2,3-Trichloropropane	ND	1.0	"							
1,3,5-Trimethylbenzene	ND	1.0	"							
1,2,4-Trimethylbenzene	ND	1.0	"							
Vinyl chloride	ND	1.0	"							
Benzene	ND	0.50	"							
Toluene	ND	0.50	"							
Ethylbenzene	ND	0.50	"							
m,p-Xylene	ND	1.0	"							
o-Xylene	ND	0.50	"							
Tert-amyl methyl ether	ND	2.0	"							
Tert-butyl alcohol	ND	10	"							
Di-isopropyl ether	ND	2.0	"							
Ethyl tert-butyl ether	ND	2.0	"							
Methyl tert-butyl ether	ND	1.0	"							
1,1,2-trichloro-1,2,2-trifluoroethane (CFC 113)	ND	5.0	"							
Surrogate 4-Bromofluorobenzene	*5.85*		*"*	*8.00*		*73.1*	*77.1-110*			*S-GC*
Surrogate Dibromofluoromethane	*6.29*		*"*	*8.00*		*78.6*	*66.3-111*			
Surrogate Toluene-d8	*8.46*		*"*	*8.00*		*106*	*84.7-109*			

SunStar Laboratories, Inc.

The results in this report apply to the samples analyzed in accordance with the chain of custody document. This analytical report must be reproduced in its entirety.

Daniel Chavez, Project Manager

SunStar Laboratories, Inc.
Providing Quality Analytical Services Nationwide

25712 Commercentre Drive
Lake Forest, California 92630
949.297.5020 Phone
949.297.5027 Fax

Murex	Project: Cenco	
2640 Walnut Ave. Unit F	Project Number: 1003-001-300	**Reported:**
Tustin CA, 92780	Project Manager: Jeremy Squire	02/09/11 14:52

Volatile Organic Compounds by EPA Method 8260B - Quality Control

SunStar Laboratories, Inc.

Analyte	Result	Reporting Limit	Units	Spike Level	Source Result	%REC	%REC Limits	RPD	RPD Limit	Notes
Batch 1020407 - EPA 5030 GCMS										
LCS (1020407-BS1)				Prepared: 02/04/11		Analyzed: 02/08/11				
Chlorobenzene	23.4	1.0	ug/l	20.0		117	75-125			
1,1-Dichloroethene	17.8	1.0	"	20.0		89.2	75-125			
Trichloroethene	19 1	1.0	"	20.0		95.6	75-125			
Benzene	24.0	0.50	"	20.0		120	75-125			
Toluene	24 9	0.50	"	20.0		124	75-125			
Surrogate 4-Bromofluorobenzene	*8.82*		"	*8.00*		*110*	*77.1-110*			
Surrogate Dibromofluoromethane	*8.73*		"	*8.00*		*109*	*66.3-111*			
Surrogate Toluene-d8	*8.74*		"	*8.00*		*109*	*84.7-109*			
Matrix Spike (1020407-MS1)		**Source: T110112-01**		Prepared: 02/04/11		Analyzed: 02/08/11				
Chlorobenzene	18 2	1.0	ug/l	20.0	ND	91.0	75-125			
1,1-Dichloroethene	13.1	1.0	"	20.0	ND	65.6	75-125			QR-03
Trichloroethene	13.6	1.0	"	20.0	ND	67.8	75-125			QR-03
Benzene	17 2	0.50	"	20.0	ND	86.0	75-125			
Toluene	17.8	0.50	"	20.0	ND	88.9	75-125			
Surrogate 4-Bromofluorobenzene	*8.59*		"	*8.00*		*107*	*77.1-110*			
Surrogate Dibromofluoromethane	*6.99*		"	*8.00*		*87.4*	*66.3-111*			
Surrogate Toluene-d8	*8.52*		"	*8.00*		*106*	*84.7-109*			
Matrix Spike Dup (1020407-MSD1)		**Source: T110112-01**		Prepared: 02/04/11		Analyzed: 02/08/11				
Chlorobenzene	22.9	1.0	ug/l	20.0	ND	115	75-125	23.1	20	QR-03
1,1-Dichloroethene	18.3	1.0	"	20.0	ND	91.4	75-125	32.9	20	QR-03
Trichloroethene	17.6	1.0	"	20.0	ND	88.2	75-125	26.1	20	QR-03
Benzene	22.6	0.50	"	20.0	ND	113	75-125	27.2	20	QR-03
Toluene	23.3	0.50	"	20.0	ND	117	75-125	27.0	20	QR-03
Surrogate 4-Bromofluorobenzene	*8.81*		"	*8.00*		*110*	*77.1-110*			
Surrogate Dibromofluoromethane	*7.72*		"	*8.00*		*96.5*	*66.3-111*			
Surrogate Toluene-d8	*8.73*		"	*8.00*		*109*	*84.7-109*			

SunStar Laboratories, Inc.

The results in this report apply to the samples analyzed in accordance with the chain of custody document. This analytical report must be reproduced in its entirety.

Daniel Chavez, Project Manager

SunStar Laboratories, Inc.
PROVIDING QUALITY ANALYTICAL SERVICES NATIONWIDE

25712 Commercentre Drive
Lake Forest, California 92630
949.297.5020 Phone
949.297.5027 Fax

Murex	Project: Cenco	
2640 Walnut Ave. Unit F	Project Number: 1003-001-300	**Reported:**
Tustin CA, 92780	Project Manager: Jeremy Squire	02/09/11 14:52

Notes and Definitions

S-GC	Surrogate recovery outside of established control limits. The data was accepted based on valid recovery of the remaining surrogate(s).
QR-03	The RPD value for the sample duplicate or MS/MSD was outside of QC acceptance limits due to matrix interference. QC batch accepted based on LCS and/or LCSD recovery and/or RPD values.
DET	Analyte DETECTED
ND	Analyte NOT DETECTED at or above the reporting limit
NR	Not Reported
dry	Sample results reported on a dry weight basis
RPD	Relative Percent Difference

SunStar Laboratories, Inc.

The results in this report apply to the samples analyzed in accordance with the chain of custody document. This analytical report must be reproduced in its entirety.

Daniel Chavez, Project Manager

SunStar Laboratories, Inc.
25712 Commercentre Dr
Lake Forest, CA 92630
949-297-5020

Chain of Custody Record

Client: Murex Environmental, Inc.
Address: 2640 Walnut Ave, Unit F
Phone: (714) 508-0800 Fax: (714) 508-0880
Project Manager: Jeremy Squire (714) 604-5836

Date: 2·3·2011 Page: 1 Of 1
Project Name: CENCO
Collector: F. Sosic Client Project #: 1003-001-300
Batch #: T110112 EDF #:

Sample ID	Date Sampled	Time	Sample Type	8260 (VOCs NO OXY)	8260 + OXY	1,4-Dioxane	8270 Semi-Volatiles (PAHs, etc)	8021 BTEX	8015M (TPH gasoline)	8015M (TPH diesel)	Hexavalent Chromium (7199)	6010/7000 Title 22 Metals	PCBs				Total # of containers	Comments/Preservative	Laboratory ID #
LL_WI2_020311	2·3·2011	9:00	GW		X				X								6		01
LL_MW107A_020311		1100			X				X								6		02
LL_EWI_020311_01		1330			X				X								6		03
LL_EWI_020311_02		1345			X				X								6		04
LL_MW106A_020311		1500			X				X								6		05
TB_020311			Water		X												2		06

Relinquished by: (signature)	Date / Time	Received by: (signat	Date / Time
[signature]	2·3·2011 1645	[signature]	2/3/11 1645
Relinquished by: (signature)	Date / Time	Received by: (signat	Date / Time
Relinquished by: (signature)	Date / Time	Received by: (signat	Date / Time

Total # of containers	32
Chain of Custody seals	✓
Seals intact? Y/N/NA	N/A
Received good condition/cold	Y
Turn around time:	

Notes
2.2°

Sample disposal Instructions: Disposal @ $2.00 each ____ Return to client ____ Pickup ____

SunStar Laboratories, Inc.
PROVIDING QUALITY ANALYTICAL SERVICES NATIONWIDE

SAMPLE RECEIVING REVIEW SHEET

BATCH # T110112

Client Name: MUREX

Project: CENCO

Received by: DAN

Date/Time Received: 2/3/11 1645

Delivered by : ☐ Client ☒ SunStar Courier ☐ GSO ☐ FedEx ☐ Other _____

Total number of coolers received 0

Temp criteria = 6°C > 0°C (no frozen containers)

Temperature: cooler #1 2.4 °C +/- the CF (- 0.2°C) = 2.2 °C corrected temperature

cooler #2 _____ °C +/- the CF (- 0.2°C) = _____ °C corrected temperature

cooler #3 _____ °C +/- the CF (- 0.2°C) = _____ °C corrected temperature

Samples outside temp. but received on ice, w/in 6 hours of final sampling.	☒ Yes	☐ No*	☐ N/A
Custody Seals Intact on Cooler/Sample	☐ Yes	☐ No*	☒ N/A
Sample Containers Intact	☒ Yes	☐ No*	
Sample labels match COC ID's	☒ Yes	☐ No*	
Total number of containers received match COC	☒ Yes	☐ No*	
Proper containers received for analyses requested on COC	☒ Yes	☐ No*	
Proper preservative indicated on COC/containers for analyses requested	☒ Yes	☐ No*	☐ N/A

Complete shipment received in good condition with correct temperatures, containers, labels, volumes preservatives and within method specified holding times. ☒ **Yes** ☐ **No***

* Complete Non-Conformance Receiving Sheet if checked

Cooler/Sample Review - Initials and date BC 2/4/11

Comments:

SunStar Laboratories, Inc.
PROVIDING QUALITY ANALYTICAL SERVICES NATIONWIDE

25712 Commercentre Drive
Lake Forest, California 92630
949.297.5020 Phone
949.297.5027 Fax

10 February 2011

Jeremy Squire
Murex
2640 Walnut Ave. Unit F
Tustin, CA 92780

RE: Cenco

Enclosed are the results of analyses for samples received by the laboratory on 02/04/11 16:40. If you have any questions concerning this report, please feel free to contact me.

Sincerely,

Daniel Chavez
Project Manager

SunStar Laboratories, Inc.
PROVIDING QUALITY ANALYTICAL SERVICES NATIONWIDE

25712 Commercentre Drive
Lake Forest, California 92630
949.297.5020 Phone
949.297.5027 Fax

Murex	Project: Cenco	
2640 Walnut Ave. Unit F	Project Number: 1003-001-300	**Reported:**
Tustin CA, 92780	Project Manager: Jeremy Squire	02/10/11 16:41

ANALYTICAL REPORT FOR SAMPLES

Sample ID	Laboratory ID	Matrix	Date Sampled	Date Received
LL_MW701_020411	T110121-01	Water	02/04/11 11:20	02/04/11 16:40
LL_MW702_020411	T110121-02	Water	02/04/11 09:00	02/04/11 16:40
LL_MW703_020411	T110121-03	Water	02/04/11 11:00	02/04/11 16:40
LL_MW705_020411	T110121-04	Water	02/04/11 10:20	02/04/11 16:40
LL_MW706_020411	T110121-05	Water	02/04/11 10:00	02/04/11 16:40
LL_MW707_020411	T110121-06	Water	02/04/11 12:20	02/04/11 16:40
LL_MW708_020411	T110121-07	Water	02/04/11 14:00	02/04/11 16:40
LL_MW709_020411	T110121-08	Water	02/04/11 14:55	02/04/11 16:40

SunStar Laboratories, Inc.

The results in this report apply to the samples analyzed in accordance with the chain of custody document. This analytical report must be reproduced in its entirety.

Daniel Chavez, Project Manager

SunStar Laboratories, Inc.
Providing Quality Analytical Services Nationwide

25712 Commercentre Drive
Lake Forest, California 92630
949.297.5020 Phone
949.297.5027 Fax

Murex	Project: Cenco	
2640 Walnut Ave. Unit F	Project Number: 1003-001-300	**Reported:**
Tustin CA, 92780	Project Manager: Jeremy Squire	02/10/11 16:41

LL_MW701_020411
T110121-01 (Water)

Analyte	Result	Reporting Limit	Units	Dilution	Batch	Prepared	Analyzed	Method	Notes
SunStar Laboratories, Inc.									
Purgeable Petroleum Hydrocarbons by EPA 8015C									
C6-C12 (GRO)	**190**	50	ug/l	1	1020701	02/07/11	02/09/11	EPA 8015C	
Surrogate 4-Bromofluorobenzene		*99.0 %*	*72.6-146*		"	"	"	"	
Volatile Organic Compounds by EPA Method 8260B									
Bromobenzene	ND	1.0	ug/l	1	1020702	02/07/11	02/07/11	EPA 8260B	
Bromochloromethane	ND	1.0	"	"	"	"	"	"	
Bromodichloromethane	ND	1.0	"	"	"	"	"	"	
Bromoform	ND	1.0	"	"	"	"	"	"	
Bromomethane	ND	1.0	"	"	"	"	"	"	
n-Butylbenzene	ND	1.0	"	"	"	"	"	"	
sec-Butylbenzene	ND	1.0	"	"	"	"	"	"	
tert-Butylbenzene	ND	1.0	"	"	"	"	"	"	
Carbon tetrachloride	ND	0.50	"	"	"	"	"	"	
Chlorobenzene	ND	1.0	"	"	"	"	"	"	
Chloroethane	ND	1.0	"	"	"	"	"	"	
Chloroform	ND	1.0	"	"	"	"	"	"	
Chloromethane	ND	1.0	"	"	"	"	"	"	
2-Chlorotoluene	ND	1.0	"	"	"	"	"	"	
4-Chlorotoluene	ND	1.0	"	"	"	"	"	"	
Dibromochloromethane	ND	1.0	"	"	"	"	"	"	
1,2-Dibromo-3-chloropropane	ND	1.0	"	"	"	"	"	"	
1,2-Dibromoethane (EDB)	ND	1.0	"	"	"	"	"	"	
Dibromomethane	ND	1.0	"	"	"	"	"	"	
1,2-Dichlorobenzene	ND	1.0	"	"	"	"	"	"	
1,3-Dichlorobenzene	ND	1.0	"	"	"	"	"	"	
1,4-Dichlorobenzene	ND	1.0	"	"	"	"	"	"	
Dichlorodifluoromethane	ND	0.50	"	"	"	"	"	"	
1,1-Dichloroethane	ND	1.0	"	"	"	"	"	"	
1,2-Dichloroethane	ND	0.50	"	"	"	"	"	"	
1,1-Dichloroethene	**1.7**	1.0	"	"	"	"	"	"	
cis-1,2-Dichloroethene	**9.5**	1.0	"	"	"	"	"	"	
trans-1,2-Dichloroethene	**1.6**	1.0	"	"	"	"	"	"	

SunStar Laboratories, Inc.

The results in this report apply to the samples analyzed in accordance with the chain of custody document. This analytical report must be reproduced in its entirety.

Daniel Chavez, Project Manager

SunStar Laboratories, Inc.
PROVIDING QUALITY ANALYTICAL SERVICES NATIONWIDE

25712 Commercentre Drive
Lake Forest, California 92630
949.297.5020 Phone
949.297.5027 Fax

Murex	Project: Cenco	
2640 Walnut Ave. Unit F	Project Number: 1003-001-300	**Reported:**
Tustin CA, 92780	Project Manager: Jeremy Squire	02/10/11 16:41

LL_MW701_020411

T110121-01 (Water)

SunStar Laboratories, Inc.

Volatile Organic Compounds by EPA Method 8260B

Analyte	Result	Reporting Limit	Units	Dilution	Batch	Prepared	Analyzed	Method	Notes
1,2-Dichloropropane	ND	1.0	ug/l	1	1020702	02/07/11	02/07/11	EPA 8260B	
1,3-Dichloropropane	ND	1.0	"	"	"	"	"	"	
2,2-Dichloropropane	ND	1.0	"	"	"	"	"	"	
1,1-Dichloropropene	ND	1.0	"	"	"	"	"	"	
cis-1,3-Dichloropropene	ND	0.50	"	"	"	"	"	"	
trans-1,3-Dichloropropene	ND	0.50	"	"	"	"	"	"	
Hexachlorobutadiene	ND	1.0	"	"	"	"	"	"	
Isopropylbenzene	ND	1.0	"	"	"	"	"	"	
p-Isopropyltoluene	ND	1.0	"	"	"	"	"	"	
Methylene chloride	ND	1.0	"	"	"	"	"	"	
Naphthalene	ND	1.0	"	"	"	"	"	"	
n-Propylbenzene	ND	1.0	"	"	"	"	"	"	
Styrene	ND	1.0	"	"	"	"	"	"	
1,1,2,2-Tetrachloroethane	ND	1.0	"	"	"	"	"	"	
1,1,1,2-Tetrachloroethane	ND	1.0	"	"	"	"	"	"	
Tetrachloroethene	ND	1.0	"	"	"	"	"	"	
1,2,3-Trichlorobenzene	ND	1.0	"	"	"	"	"	"	
1,2,4-Trichlorobenzene	ND	1.0	"	"	"	"	"	"	
1,1,2-Trichloroethane	ND	1.0	"	"	"	"	"	"	
1,1,1-Trichloroethane	ND	1.0	"	"	"	"	"	"	
Trichloroethene	**4.3**	1.0	"	"	"	"	"	"	
Trichlorofluoromethane	ND	1.0	"	"	"	"	"	"	
1,2,3-Trichloropropane	ND	1.0	"	"	"	"	"	"	
1,3,5-Trimethylbenzene	ND	1.0	"	"	"	"	"	"	
1,2,4-Trimethylbenzene	ND	1.0	"	"	"	"	"	"	
Vinyl chloride	ND	1.0	"	"	"	"	"	"	
Benzene	ND	0.50	"	"	"	"	"	"	
Toluene	ND	0.50	"	"	"	"	"	"	
Ethylbenzene	ND	0.50	"	"	"	"	"	"	
m,p-Xylene	ND	1.0	"	"	"	"	"	"	
o-Xylene	ND	0.50	"	"	"	"	"	"	
Tert-amyl methyl ether	ND	2.0	"	"	"	"	"	"	

SunStar Laboratories, Inc.

The results in this report apply to the samples analyzed in accordance with the chain of custody document. This analytical report must be reproduced in its entirety.

Daniel Chavez, Project Manager

SunStar Laboratories, Inc.
PROVIDING QUALITY ANALYTICAL SERVICES NATIONWIDE

25712 Commercentre Drive
Lake Forest, California 92630
949.297.5020 Phone
949.297.5027 Fax

Murex	Project: Cenco	
2640 Walnut Ave. Unit F	Project Number: 1003-001-300	**Reported:**
Tustin CA, 92780	Project Manager: Jeremy Squire	02/10/11 16:41

LL_MW701_020411

T110121-01 (Water)

Analyte	Result	Reporting Limit	Units	Dilution	Batch	Prepared	Analyzed	Method	Notes
SunStar Laboratories, Inc.									
Volatile Organic Compounds by EPA Method 8260B									
Tert-butyl alcohol	ND	10	ug/l	1	1020702	02/07/11	02/07/11	EPA 8260B	
Di-isopropyl ether	ND	2.0	"	"	"	"	"	"	
Ethyl tert-butyl ether	ND	2.0	"	"	"	"	"	"	
Methyl tert-butyl ether	ND	1.0	"	"	"	"	"	"	
1,1,2-trichloro-1,2,2-trifluoroethane (CFC 113)	ND	5.0	"	"	"	"	"	"	
Surrogate 4-Bromofluorobenzene		*129 %*	*77.1-110*		"	"	"	"	*S-GC*
Surrogate Dibromofluoromethane		*87.8 %*	*66.3-111*		"	"	"	"	
Surrogate Toluene-d8		*109 %*	*84.7-109*		"	"	"	"	

SunStar Laboratories, Inc.

Daniel J Chávez

Daniel Chavez, Project Manager

The results in this report apply to the samples analyzed in accordance with the chain of custody document. This analytical report must be reproduced in its entirety.

SunStar Laboratories, Inc.
Providing Quality Analytical Services Nationwide

25712 Commercentre Drive
Lake Forest, California 92630
949.297.5020 Phone
949.297.5027 Fax

Murex	Project: Cenco	
2640 Walnut Ave. Unit F	Project Number: 1003-001-300	**Reported:**
Tustin CA, 92780	Project Manager: Jeremy Squire	02/10/11 16:41

LL_MW702_020411

T110121-02 (Water)

Analyte	Result	Reporting Limit	Units	Dilution	Batch	Prepared	Analyzed	Method	Notes
SunStar Laboratories, Inc.									
Purgeable Petroleum Hydrocarbons by EPA 8015C									
C6-C12 (GRO)	**2300**	50	ug/l	1	1020701	02/07/11	02/09/11	EPA 8015C	
Surrogate 4-Bromofluorobenzene		*131 %*	*72.6-146*		"	"	"	"	
Volatile Organic Compounds by EPA Method 8260B									
Bromobenzene	ND	1.0	ug/l	1	1020702	02/07/11	02/08/11	EPA 8260B	
Bromochloromethane	ND	1.0	"	"	"	"	"	"	
Bromodichloromethane	ND	1.0	"	"	"	"	"	"	
Bromoform	ND	1.0	"	"	"	"	"	"	
Bromomethane	ND	1.0	"	"	"	"	"	"	
n-Butylbenzene	**6.7**	1.0	"	"	"	"	"	"	
sec-Butylbenzene	**10**	1.0	"	"	"	"	"	"	
tert-Butylbenzene	**1.5**	1.0	"	"	"	"	"	"	
Carbon tetrachloride	ND	0.50	"	"	"	"	"	"	
Chlorobenzene	ND	1.0	"	"	"	"	"	"	
Chloroethane	ND	1.0	"	"	"	"	"	"	
Chloroform	ND	1.0	"	"	"	"	"	"	
Chloromethane	ND	1.0	"	"	"	"	"	"	
2-Chlorotoluene	ND	1.0	"	"	"	"	"	"	
4-Chlorotoluene	ND	1.0	"	"	"	"	"	"	
Dibromochloromethane	ND	1.0	"	"	"	"	"	"	
1,2-Dibromo-3-chloropropane	ND	1.0	"	"	"	"	"	"	
1,2-Dibromoethane (EDB)	ND	1.0	"	"	"	"	"	"	
Dibromomethane	ND	1.0	"	"	"	"	"	"	
1,2-Dichlorobenzene	ND	1.0	"	"	"	"	"	"	
1,3-Dichlorobenzene	ND	1.0	"	"	"	"	"	"	
1,4-Dichlorobenzene	ND	1.0	"	"	"	"	"	"	
Dichlorodifluoromethane	ND	0.50	"	"	"	"	"	"	
1,1-Dichloroethane	ND	1.0	"	"	"	"	"	"	
1,2-Dichloroethane	ND	0.50	"	"	"	"	"	"	
1,1-Dichloroethene	ND	1.0	"	"	"	"	"	"	
cis-1,2-Dichloroethene	ND	1.0	"	"	"	"	"	"	
trans-1,2-Dichloroethene	ND	1.0	"	"	"	"	"	"	
1,2-Dichloropropane	ND	1.0	"	"	"	"	"	"	

SunStar Laboratories, Inc.

The results in this report apply to the samples analyzed in accordance with the chain of custody document. This analytical report must be reproduced in its entirety.

Daniel Chavez, Project Manager

SunStar Laboratories, Inc.
Providing Quality Analytical Services Nationwide

25712 Commercentre Drive
Lake Forest, California 92630
949.297.5020 Phone
949.297.5027 Fax

Murex	Project: Cenco	
2640 Walnut Ave. Unit F	Project Number: 1003-001-300	**Reported:**
Tustin CA, 92780	Project Manager: Jeremy Squire	02/10/11 16:41

LL_MW702_020411

T110121-02 (Water)

SunStar Laboratories, Inc.

Volatile Organic Compounds by EPA Method 8260B

Analyte	Result	Reporting Limit	Units	Dilution	Batch	Prepared	Analyzed	Method	Notes
1,3-Dichloropropane	ND	1.0	ug/l	1	1020702	02/07/11	02/08/11	EPA 8260B	
2,2-Dichloropropane	ND	1.0	"	"	"	"	"	"	
1,1-Dichloropropene	ND	1.0	"	"	"	"	"	"	
cis-1,3-Dichloropropene	ND	0.50	"	"	"	"	"	"	
trans-1,3-Dichloropropene	ND	0.50	"	"	"	"	"	"	
Hexachlorobutadiene	ND	1.0	"	"	"	"	"	"	
Isopropylbenzene	**42**	1.0	"	"	"	"	"	"	
p-Isopropyltoluene	ND	1.0	"	"	"	"	"	"	
Methylene chloride	ND	1.0	"	"	"	"	"	"	
Naphthalene	**5.2**	1.0	"	"	"	"	"	"	
n-Propylbenzene	**66**	1.0	"	"	"	"	"	"	
Styrene	ND	1.0	"	"	"	"	"	"	
1,1,2,2-Tetrachloroethane	ND	1.0	"	"	"	"	"	"	
1,1,1,2-Tetrachloroethane	ND	1.0	"	"	"	"	"	"	
Tetrachloroethene	ND	1.0	"	"	"	"	"	"	
1,2,3-Trichlorobenzene	ND	1.0	"	"	"	"	"	"	
1,2,4-Trichlorobenzene	ND	1.0	"	"	"	"	"	"	
1,1,2-Trichloroethane	ND	1.0	"	"	"	"	"	"	
1,1,1-Trichloroethane	ND	1.0	"	"	"	"	"	"	
Trichloroethene	ND	1.0	"	"	"	"	"	"	
Trichlorofluoromethane	ND	1.0	"	"	"	"	"	"	
1,2,3-Trichloropropane	ND	1.0	"	"	"	"	"	"	
1,3,5-Trimethylbenzene	**1.5**	1.0	"	"	"	"	"	"	
1,2,4-Trimethylbenzene	ND	1.0	"	"	"	"	"	"	
Vinyl chloride	ND	1.0	"	"	"	"	"	"	
Benzene	**91**	0.50	"	"	"	"	"	"	
Toluene	**0.74**	0.50	"	"	"	"	"	"	
Ethylbenzene	**0.92**	0.50	"	"	"	"	"	"	
m,p-Xylene	ND	1.0	"	"	"	"	"	"	
o-Xylene	ND	0.50	"	"	"	"	"	"	
Tert-amyl methyl ether	ND	2.0	"	"	"	"	"	"	
Tert-butyl alcohol	ND	10	"	"	"	"	"	"	

SunStar Laboratories, Inc.

The results in this report apply to the samples analyzed in accordance with the chain of custody document. This analytical report must be reproduced in its entirety.

Daniel Chavez, Project Manager

SunStar Laboratories, Inc.
PROVIDING QUALITY ANALYTICAL SERVICES NATIONWIDE

25712 Commercentre Drive
Lake Forest, California 92630
949.297.5020 Phone
949.297.5027 Fax

Murex	Project: Cenco	
2640 Walnut Ave. Unit F	Project Number: 1003-001-300	**Reported:**
Tustin CA, 92780	Project Manager: Jeremy Squire	02/10/11 16:41

LL_MW702_020411

T110121-02 (Water)

Analyte	Result	Reporting Limit	Units	Dilution	Batch	Prepared	Analyzed	Method	Notes
SunStar Laboratories, Inc.									
Volatile Organic Compounds by EPA Method 8260B									
Di-isopropyl ether	ND	2.0	ug/l	1	1020702	02/07/11	02/08/11	EPA 8260B	
Ethyl tert-butyl ether	ND	2.0	"	"	"	"	"	"	
Methyl tert-butyl ether	ND	1.0	"	"	"	"	"	"	
1,1,2-trichloro-1,2,2-trifluoroethane (CFC 113)	ND	5.0	"	"	"	"	"	"	
Surrogate 4-Bromofluorobenzene		*398 %*	*77.1-110*		"	"	"	"	*S-GC*
Surrogate Dibromofluoromethane		*81.6 %*	*66.3-111*		"	"	"	"	
Surrogate Toluene-d8		*109 %*	*84.7-109*		"	"	"	"	

SunStar Laboratories, Inc.

The results in this report apply to the samples analyzed in accordance with the chain of custody document. This analytical report must be reproduced in its entirety.

Daniel Chavez, Project Manager

SunStar Laboratories, Inc.
Providing Quality Analytical Services Nationwide

25712 Commercentre Drive
Lake Forest, California 92630
949.297.5020 Phone
949.297.5027 Fax

Murex	Project: Cenco	
2640 Walnut Ave. Unit F	Project Number: 1003-001-300	**Reported:**
Tustin CA, 92780	Project Manager: Jeremy Squire	02/10/11 16:41

LL_MW703_020411

T110121-03 (Water)

Analyte	Result	Reporting Limit	Units	Dilution	Batch	Prepared	Analyzed	Method	Notes
SunStar Laboratories, Inc.									
Purgeable Petroleum Hydrocarbons by EPA 8015C									
C6-C12 (GRO)	**1300**	50	ug/l	1	1020701	02/07/11	02/09/11	EPA 8015C	
Surrogate 4-Bromofluorobenzene		*86.2 %*	*72.6-146*		"	"	"	"	
Volatile Organic Compounds by EPA Method 8260B									
Bromobenzene	ND	1.0	ug/l	1	1020702	02/07/11	02/08/11	EPA 8260B	
Bromochloromethane	ND	1.0	"	"	"	"	"	"	
Bromodichloromethane	ND	1.0	"	"	"	"	"	"	
Bromoform	ND	1.0	"	"	"	"	"	"	
Bromomethane	ND	1.0	"	"	"	"	"	"	
n-Butylbenzene	ND	1.0	"	"	"	"	"	"	
sec-Butylbenzene	**1.6**	1.0	"	"	"	"	"	"	
tert-Butylbenzene	ND	1.0	"	"	"	"	"	"	
Carbon tetrachloride	ND	0.50	"	"	"	"	"	"	
Chlorobenzene	ND	1.0	"	"	"	"	"	"	
Chloroethane	ND	1.0	"	"	"	"	"	"	
Chloroform	ND	1.0	"	"	"	"	"	"	
Chloromethane	ND	1.0	"	"	"	"	"	"	
2-Chlorotoluene	ND	1.0	"	"	"	"	"	"	
4-Chlorotoluene	ND	1.0	"	"	"	"	"	"	
Dibromochloromethane	ND	1.0	"	"	"	"	"	"	
1,2-Dibromo-3-chloropropane	ND	1.0	"	"	"	"	"	"	
1,2-Dibromoethane (EDB)	ND	1.0	"	"	"	"	"	"	
Dibromomethane	ND	1.0	"	"	"	"	"	"	
1,2-Dichlorobenzene	ND	1.0	"	"	"	"	"	"	
1,3-Dichlorobenzene	ND	1.0	"	"	"	"	"	"	
1,4-Dichlorobenzene	ND	1.0	"	"	"	"	"	"	
Dichlorodifluoromethane	ND	0.50	"	"	"	"	"	"	
1,1-Dichloroethane	ND	1.0	"	"	"	"	"	"	
1,2-Dichloroethane	ND	0.50	"	"	"	"	"	"	
1,1-Dichloroethene	**3.6**	1.0	"	"	"	"	"	"	
cis-1,2-Dichloroethene	**18**	1.0	"	"	"	"	"	"	
trans-1,2-Dichloroethene	ND	1.0	"	"	"	"	"	"	
1,2-Dichloropropane	ND	1.0	"	"	"	"	"	"	

SunStar Laboratories, Inc.

The results in this report apply to the samples analyzed in accordance with the chain of custody document. This analytical report must be reproduced in its entirety.

Daniel Chavez, Project Manager

SunStar Laboratories, Inc.
PROVIDING QUALITY ANALYTICAL SERVICES NATIONWIDE

25712 Commercentre Drive
Lake Forest, California 92630
949.297.5020 Phone
949.297.5027 Fax

Murex	Project: Cenco	
2640 Walnut Ave. Unit F	Project Number: 1003-001-300	**Reported:**
Tustin CA, 92780	Project Manager: Jeremy Squire	02/10/11 16:41

LL_MW703_020411

T110121-03 (Water)

SunStar Laboratories, Inc.

Volatile Organic Compounds by EPA Method 8260B

Analyte	Result	Reporting Limit	Units	Dilution	Batch	Prepared	Analyzed	Method	Notes
1,3-Dichloropropane	ND	1.0	ug/l	1	1020702	02/07/11	02/08/11	EPA 8260B	
2,2-Dichloropropane	ND	1.0	"	"	"	"	"	"	
1,1-Dichloropropene	ND	1.0	"	"	"	"	"	"	
cis-1,3-Dichloropropene	ND	0.50	"	"	"	"	"	"	
trans-1,3-Dichloropropene	ND	0.50	"	"	"	"	"	"	
Hexachlorobutadiene	ND	1.0	"	"	"	"	"	"	
Isopropylbenzene	**3.7**	1.0	"	"	"	"	"	"	
p-Isopropyltoluene	ND	1.0	"	"	"	"	"	"	
Methylene chloride	ND	1.0	"	"	"	"	"	"	
Naphthalene	**1.6**	1.0	"	"	"	"	"	"	
n-Propylbenzene	**1.7**	1.0	"	"	"	"	"	"	
Styrene	ND	1.0	"	"	"	"	"	"	
1,1,2,2-Tetrachloroethane	ND	1.0	"	"	"	"	"	"	
1,1,1,2-Tetrachloroethane	ND	1.0	"	"	"	"	"	"	
Tetrachloroethene	ND	1.0	"	"	"	"	"	"	
1,2,3-Trichlorobenzene	ND	1.0	"	"	"	"	"	"	
1,2,4-Trichlorobenzene	ND	1.0	"	"	"	"	"	"	
1,1,2-Trichloroethane	ND	1.0	"	"	"	"	"	"	
1,1,1-Trichloroethane	ND	1.0	"	"	"	"	"	"	
Trichloroethene	**2.0**	1.0	"	"	"	"	"	"	
Trichlorofluoromethane	ND	1.0	"	"	"	"	"	"	
1,2,3-Trichloropropane	ND	1.0	"	"	"	"	"	"	
1,3,5-Trimethylbenzene	ND	1.0	"	"	"	"	"	"	
1,2,4-Trimethylbenzene	**1.8**	1.0	"	"	"	"	"	"	
Vinyl chloride	ND	1.0	"	"	"	"	"	"	
Benzene	**33**	0.50	"	"	"	"	"	"	
Toluene	**1.3**	0.50	"	"	"	"	"	"	
Ethylbenzene	**5.2**	0.50	"	"	"	"	"	"	
m,p-Xylene	**2.8**	1.0	"	"	"	"	"	"	
o-Xylene	ND	0.50	"	"	"	"	"	"	
Tert-amyl methyl ether	ND	2.0	"	"	"	"	"	"	
Tert-butyl alcohol	ND	10	"	"	"	"	"	"	
Di-isopropyl ether	ND	2.0	"	"	"	"	"	"	

SunStar Laboratories, Inc.

Daniel J Chavez

Daniel Chavez, Project Manager

The results in this report apply to the samples analyzed in accordance with the chain of custody document. This analytical report must be reproduced in its entirety.

SunStar Laboratories, Inc.
PROVIDING QUALITY ANALYTICAL SERVICES NATIONWIDE

25712 Commercentre Drive
Lake Forest, California 92630
949.297.5020 Phone
949.297.5027 Fax

Murex	Project: Cenco	
2640 Walnut Ave. Unit F	Project Number: 1003-001-300	**Reported:**
Tustin CA, 92780	Project Manager: Jeremy Squire	02/10/11 16:41

LL_MW703_020411

T110121-03 (Water)

Analyte	Result	Reporting Limit	Units	Dilution	Batch	Prepared	Analyzed	Method	Notes
SunStar Laboratories, Inc.									
Volatile Organic Compounds by EPA Method 8260B									
Ethyl tert-butyl ether	ND	2.0	ug/l	1	1020702	02/07/11	02/08/11	EPA 8260B	
Methyl tert-butyl ether	ND	1.0	"	"	"	"	"	"	
1,1,2-trichloro-1,2,2-trifluoroethane (CFC 113)	ND	5.0	"	"	"	"	"	"	
Surrogate 4-Bromofluorobenzene		*140 %*	*77.1-110*		"	"	"	"	*S-GC*
Surrogate Dibromofluoromethane		*86.2 %*	*66.3-111*		"	"	"	"	
Surrogate Toluene-d8		*107 %*	*84.7-109*		"	"	"	"	

SunStar Laboratories, Inc.

The results in this report apply to the samples analyzed in accordance with the chain of custody document. This analytical report must be reproduced in its entirety.

Daniel Chavez, Project Manager

SunStar Laboratories, Inc.
Providing Quality Analytical Services Nationwide

25712 Commercentre Drive
Lake Forest, California 92630
949.297.5020 Phone
949.297.5027 Fax

Murex	Project: Cenco	
2640 Walnut Ave. Unit F	Project Number: 1003-001-300	**Reported:**
Tustin CA, 92780	Project Manager: Jeremy Squire	02/10/11 16:41

LL_MW705_020411

T110121-04 (Water)

Analyte	Result	Reporting Limit	Units	Dilution	Batch	Prepared	Analyzed	Method	Notes
SunStar Laboratories, Inc.									
Purgeable Petroleum Hydrocarbons by EPA 8015C									
C6-C12 (GRO)	**3100**	50	ug/l	1	1020701	02/07/11	02/09/11	EPA 8015C	
Surrogate 4-Bromofluorobenzene		*94.7 %*	*72.6-146*		"	"	"	"	
Volatile Organic Compounds by EPA Method 8260B									
Bromobenzene	ND	1.0	ug/l	1	1020702	02/07/11	02/08/11	EPA 8260B	
Bromochloromethane	ND	1.0	"	"	"	"	"	"	
Bromodichloromethane	ND	1.0	"	"	"	"	"	"	
Bromoform	ND	1.0	"	"	"	"	"	"	
Bromomethane	ND	1.0	"	"	"	"	"	"	
n-Butylbenzene	**8.5**	1.0	"	"	"	"	"	"	
sec-Butylbenzene	**8.9**	1.0	"	"	"	"	"	"	
tert-Butylbenzene	**1.3**	1.0	"	"	"	"	"	"	
Carbon tetrachloride	ND	0.50	"	"	"	"	"	"	
Chlorobenzene	ND	1.0	"	"	"	"	"	"	
Chloroethane	ND	1.0	"	"	"	"	"	"	
Chloroform	ND	1.0	"	"	"	"	"	"	
Chloromethane	ND	1.0	"	"	"	"	"	"	
2-Chlorotoluene	ND	1.0	"	"	"	"	"	"	
4-Chlorotoluene	ND	1.0	"	"	"	"	"	"	
Dibromochloromethane	ND	1.0	"	"	"	"	"	"	
1,2-Dibromo-3-chloropropane	ND	1.0	"	"	"	"	"	"	
1,2-Dibromoethane (EDB)	ND	1.0	"	"	"	"	"	"	
Dibromomethane	ND	1.0	"	"	"	"	"	"	
1,2-Dichlorobenzene	ND	1.0	"	"	"	"	"	"	
1,3-Dichlorobenzene	ND	1.0	"	"	"	"	"	"	
1,4-Dichlorobenzene	ND	1.0	"	"	"	"	"	"	
Dichlorodifluoromethane	ND	0.50	"	"	"	"	"	"	
1,1-Dichloroethane	ND	1.0	"	"	"	"	"	"	
1,2-Dichloroethane	ND	0.50	"	"	"	"	"	"	
1,1-Dichloroethene	ND	1.0	"	"	"	"	"	"	
cis-1,2-Dichloroethene	**2.0**	1.0	"	"	"	"	"	"	
trans-1,2-Dichloroethene	ND	1.0	"	"	"	"	"	"	
1,2-Dichloropropane	ND	1.0	"	"	"	"	"	"	

SunStar Laboratories, Inc.

The results in this report apply to the samples analyzed in accordance with the chain of custody document. This analytical report must be reproduced in its entirety.

Daniel Chavez, Project Manager

SunStar Laboratories, Inc.
Providing Quality Analytical Services Nationwide

25712 Commercentre Drive
Lake Forest, California 92630
949.297.5020 Phone
949.297.5027 Fax

Murex	Project: Cenco	
2640 Walnut Ave. Unit F	Project Number: 1003-001-300	**Reported:**
Tustin CA, 92780	Project Manager: Jeremy Squire	02/10/11 16:41

LL_MW705_020411

T110121-04 (Water)

SunStar Laboratories, Inc.

Volatile Organic Compounds by EPA Method 8260B

Analyte	Result	Reporting Limit	Units	Dilution	Batch	Prepared	Analyzed	Method	Notes
1,3-Dichloropropane	ND	1.0	ug/l	1	1020702	02/07/11	02/08/11	EPA 8260B	
2,2-Dichloropropane	ND	1.0	"	"	"	"	"	"	
1,1-Dichloropropene	ND	1.0	"	"	"	"	"	"	
cis-1,3-Dichloropropene	ND	0.50	"	"	"	"	"	"	
trans-1,3-Dichloropropene	ND	0.50	"	"	"	"	"	"	
Hexachlorobutadiene	ND	1.0	"	"	"	"	"	"	
Isopropylbenzene	**18**	1.0	"	"	"	"	"	"	
p-Isopropyltoluene	ND	1.0	"	"	"	"	"	"	
Methylene chloride	ND	1.0	"	"	"	"	"	"	
Naphthalene	**6.7**	1.0	"	"	"	"	"	"	
n-Propylbenzene	**40**	1.0	"	"	"	"	"	"	
Styrene	ND	1.0	"	"	"	"	"	"	
1,1,2,2-Tetrachloroethane	ND	1.0	"	"	"	"	"	"	
1,1,1,2-Tetrachloroethane	ND	1.0	"	"	"	"	"	"	
Tetrachloroethene	ND	1.0	"	"	"	"	"	"	
1,2,3-Trichlorobenzene	ND	1.0	"	"	"	"	"	"	
1,2,4-Trichlorobenzene	ND	1.0	"	"	"	"	"	"	
1,1,2-Trichloroethane	ND	1.0	"	"	"	"	"	"	
1,1,1-Trichloroethane	ND	1.0	"	"	"	"	"	"	
Trichloroethene	ND	1.0	"	"	"	"	"	"	
Trichlorofluoromethane	ND	1.0	"	"	"	"	"	"	
1,2,3-Trichloropropane	ND	1.0	"	"	"	"	"	"	
1,3,5-Trimethylbenzene	**1.3**	1.0	"	"	"	"	"	"	
1,2,4-Trimethylbenzene	ND	1.0	"	"	"	"	"	"	
Vinyl chloride	ND	1.0	"	"	"	"	"	"	
Benzene	**450**	12	"	25	"	"	02/09/11	"	
Toluene	**3.5**	0.50	"	1	"	"	02/08/11	"	
Ethylbenzene	**5.1**	0.50	"	"	"	"	"	"	
m,p-Xylene	**6.4**	1.0	"	"	"	"	"	"	
o-Xylene	**0.54**	0.50	"	"	"	"	"	"	
Tert-amyl methyl ether	ND	2.0	"	"	"	"	02/09/11	"	
Tert-butyl alcohol	**94**	10	"	"	"	"	02/08/11	"	
Di-isopropyl ether	ND	2.0	"	"	"	"	"	"	

SunStar Laboratories, Inc.

The results in this report apply to the samples analyzed in accordance with the chain of custody document. This analytical report must be reproduced in its entirety.

Daniel Chavez, Project Manager

SunStar Laboratories, Inc.
PROVIDING QUALITY ANALYTICAL SERVICES NATIONWIDE

25712 Commercentre Drive
Lake Forest, California 92630
949.297.5020 Phone
949.297.5027 Fax

Murex	Project: Cenco	
2640 Walnut Ave. Unit F	Project Number: 1003-001-300	**Reported:**
Tustin CA, 92780	Project Manager: Jeremy Squire	02/10/11 16:41

LL_MW705_020411

T110121-04 (Water)

Analyte	Result	Reporting Limit	Units	Dilution	Batch	Prepared	Analyzed	Method	Notes
SunStar Laboratories, Inc.									
Volatile Organic Compounds by EPA Method 8260B									
Ethyl tert-butyl ether	ND	2.0	ug/l	1	1020702	02/07/11	02/08/11	EPA 8260B	
Methyl tert-butyl ether	**90**	25	"	25	"	"	02/09/11	"	
1,1,2-trichloro-1,2,2-trifluoroethane (CFC 113)	ND	5.0	"	1	"	"	02/08/11	"	
Surrogate 4-Bromofluorobenzene		*120 %*	*77.1-110*		"	"	"	"	*S-GC*
Surrogate Dibromofluoromethane		*80.5 %*	*66.3-111*		"	"	"	"	
Surrogate Toluene-d8		*107 %*	*84.7-109*		"	"	"	"	

SunStar Laboratories, Inc.

The results in this report apply to the samples analyzed in accordance with the chain of custody document. This analytical report must be reproduced in its entirety.

Daniel Chavez, Project Manager

SunStar Laboratories, Inc.
Providing Quality Analytical Services Nationwide

25712 Commercentre Drive
Lake Forest, California 92630
949.297.5020 Phone
949.297.5027 Fax

Murex	Project: Cenco	
2640 Walnut Ave. Unit F	Project Number: 1003-001-300	**Reported:**
Tustin CA, 92780	Project Manager: Jeremy Squire	02/10/11 16:41

LL_MW706_020411

T110121-05 (Water)

Analyte	Result	Reporting Limit	Units	Dilution	Batch	Prepared	Analyzed	Method	Notes
SunStar Laboratories, Inc.									
Purgeable Petroleum Hydrocarbons by EPA 8015C									
C6-C12 (GRO)	**390**	50	ug/l	1	1020701	02/07/11	02/09/11	EPA 8015C	
Surrogate 4-Bromofluorobenzene		*93.2 %*	*72.6-146*		"	"	"	"	
Volatile Organic Compounds by EPA Method 8260B									
Bromobenzene	ND	1.0	ug/l	1	1020702	02/07/11	02/07/11	EPA 8260B	
Bromochloromethane	ND	1.0	"	"	"	"	"	"	
Bromodichloromethane	ND	1.0	"	"	"	"	"	"	
Bromoform	ND	1.0	"	"	"	"	"	"	
Bromomethane	ND	1.0	"	"	"	"	"	"	
n-Butylbenzene	ND	1.0	"	"	"	"	"	"	
sec-Butylbenzene	ND	1.0	"	"	"	"	"	"	
tert-Butylbenzene	ND	1.0	"	"	"	"	"	"	
Carbon tetrachloride	ND	0.50	"	"	"	"	"	"	
Chlorobenzene	ND	1.0	"	"	"	"	"	"	
Chloroethane	ND	1.0	"	"	"	"	"	"	
Chloroform	ND	1.0	"	"	"	"	"	"	
Chloromethane	ND	1.0	"	"	"	"	"	"	
2-Chlorotoluene	ND	1.0	"	"	"	"	"	"	
4-Chlorotoluene	ND	1.0	"	"	"	"	"	"	
Dibromochloromethane	ND	1.0	"	"	"	"	"	"	
1,2-Dibromo-3-chloropropane	ND	1.0	"	"	"	"	"	"	
1,2-Dibromoethane (EDB)	ND	1.0	"	"	"	"	"	"	
Dibromomethane	ND	1.0	"	"	"	"	"	"	
1,2-Dichlorobenzene	ND	1.0	"	"	"	"	"	"	
1,3-Dichlorobenzene	ND	1.0	"	"	"	"	"	"	
1,4-Dichlorobenzene	ND	1.0	"	"	"	"	"	"	
Dichlorodifluoromethane	ND	0.50	"	"	"	"	"	"	
1,1-Dichloroethane	ND	1.0	"	"	"	"	"	"	
1,2-Dichloroethane	ND	0.50	"	"	"	"	"	"	
1,1-Dichloroethene	ND	1.0	"	"	"	"	"	"	
cis-1,2-Dichloroethene	**3.6**	1.0	"	"	"	"	"	"	
trans-1,2-Dichloroethene	ND	1.0	"	"	"	"	"	"	
1,2-Dichloropropane	ND	1.0	"	"	"	"	"	"	

SunStar Laboratories, Inc.

The results in this report apply to the samples analyzed in accordance with the chain of custody document. This analytical report must be reproduced in its entirety.

Daniel Chavez, Project Manager

SunStar Laboratories, Inc.
Providing Quality Analytical Services Nationwide

25712 Commercentre Drive
Lake Forest, California 92630
949.297.5020 Phone
949.297.5027 Fax

Murex	Project: Cenco	
2640 Walnut Ave. Unit F	Project Number: 1003-001-300	**Reported:**
Tustin CA, 92780	Project Manager: Jeremy Squire	02/10/11 16:41

LL_MW706_020411

T110121-05 (Water)

SunStar Laboratories, Inc.

Volatile Organic Compounds by EPA Method 8260B

Analyte	Result	Reporting Limit	Units	Dilution	Batch	Prepared	Analyzed	Method	Notes
1,3-Dichloropropane	ND	1.0	ug/l	1	1020702	02/07/11	02/07/11	EPA 8260B	
2,2-Dichloropropane	ND	1.0	"	"	"	"	"	"	
1,1-Dichloropropene	ND	1.0	"	"	"	"	"	"	
cis-1,3-Dichloropropene	ND	0.50	"	"	"	"	"	"	
trans-1,3-Dichloropropene	ND	0.50	"	"	"	"	"	"	
Hexachlorobutadiene	ND	1.0	"	"	"	"	"	"	
Isopropylbenzene	ND	1.0	"	"	"	"	"	"	
p-Isopropyltoluene	ND	1.0	"	"	"	"	"	"	
Methylene chloride	ND	1.0	"	"	"	"	"	"	
Naphthalene	ND	1.0	"	"	"	"	"	"	
n-Propylbenzene	ND	1.0	"	"	"	"	"	"	
Styrene	ND	1.0	"	"	"	"	"	"	
1,1,2,2-Tetrachloroethane	ND	1.0	"	"	"	"	"	"	
1,1,1,2-Tetrachloroethane	ND	1.0	"	"	"	"	"	"	
Tetrachloroethene	ND	1.0	"	"	"	"	"	"	
1,2,3-Trichlorobenzene	ND	1.0	"	"	"	"	"	"	
1,2,4-Trichlorobenzene	ND	1.0	"	"	"	"	"	"	
1,1,2-Trichloroethane	ND	1.0	"	"	"	"	"	"	
1,1,1-Trichloroethane	ND	1.0	"	"	"	"	"	"	
Trichloroethene	ND	1.0	"	"	"	"	"	"	
Trichlorofluoromethane	ND	1.0	"	"	"	"	"	"	
1,2,3-Trichloropropane	ND	1.0	"	"	"	"	"	"	
1,3,5-Trimethylbenzene	ND	1.0	"	"	"	"	"	"	
1,2,4-Trimethylbenzene	ND	1.0	"	"	"	"	"	"	
Vinyl chloride	ND	1.0	"	"	"	"	"	"	
Benzene	**4.9**	0.50	"	"	"	"	"	"	
Toluene	**0.57**	0.50	"	"	"	"	"	"	
Ethylbenzene	ND	0.50	"	"	"	"	"	"	
m,p-Xylene	ND	1.0	"	"	"	"	"	"	
o-Xylene	ND	0.50	"	"	"	"	"	"	
Tert-amyl methyl ether	ND	2.0	"	"	"	"	"	"	
Tert-butyl alcohol	ND	10	"	"	"	"	"	"	

SunStar Laboratories, Inc.

The results in this report apply to the samples analyzed in accordance with the chain of custody document. This analytical report must be reproduced in its entirety.

Daniel Chavez, Project Manager

SunStar Laboratories, Inc.
PROVIDING QUALITY ANALYTICAL SERVICES NATIONWIDE

25712 Commercentre Drive
Lake Forest, California 92630
949.297.5020 Phone
949.297.5027 Fax

Murex	Project: Cenco	
2640 Walnut Ave. Unit F	Project Number: 1003-001-300	**Reported:**
Tustin CA, 92780	Project Manager: Jeremy Squire	02/10/11 16:41

LL_MW706_020411

T110121-05 (Water)

Analyte	Result	Reporting Limit	Units	Dilution	Batch	Prepared	Analyzed	Method	Notes
SunStar Laboratories, Inc.									
Volatile Organic Compounds by EPA Method 8260B									
Di-isopropyl ether	ND	2.0	ug/l	1	1020702	02/07/11	02/07/11	EPA 8260B	
Ethyl tert-butyl ether	ND	2.0	"	"	"	"	"	"	
Methyl tert-butyl ether	**4.0**	1.0	"	"	"	"	"	"	
1,1,2-trichloro-1,2,2-trifluoroethane (CFC 113)	ND	5.0	"	"	"	"	"	"	
Surrogate 4-Bromofluorobenzene		*131 %*	*77.1-110*		"	"	"	"	*S-GC*
Surrogate Dibromofluoromethane		*89.4 %*	*66.3-111*		"	"	"	"	
Surrogate Toluene-d8		*110 %*	*84.7-109*		"	"	"	"	*S-GC*

SunStar Laboratories, Inc.

The results in this report apply to the samples analyzed in accordance with the chain of custody document. This analytical report must be reproduced in its entirety.

Daniel Chavez, Project Manager

SunStar Laboratories, Inc.
Providing Quality Analytical Services Nationwide

25712 Commercentre Drive
Lake Forest, California 92630
949.297.5020 Phone
949.297.5027 Fax

Murex	Project: Cenco	
2640 Walnut Ave. Unit F	Project Number: 1003-001-300	**Reported:**
Tustin CA, 92780	Project Manager: Jeremy Squire	02/10/11 16:41

LL_MW707_020411

T110121-06 (Water)

Analyte	Result	Reporting Limit	Units	Dilution	Batch	Prepared	Analyzed	Method	Notes
SunStar Laboratories, Inc.									
Purgeable Petroleum Hydrocarbons by EPA 8015C									
C6-C12 (GRO)	**2000**	50	ug/l	1	1020701	02/07/11	02/09/11	EPA 8015C	
Surrogate 4-Bromofluorobenzene		*105 %*	*72.6-146*		"	"	"	"	
Volatile Organic Compounds by EPA Method 8260B									
Bromobenzene	ND	1.0	ug/l	1	1020702	02/07/11	02/08/11	EPA 8260B	
Bromochloromethane	ND	1.0	"	"	"	"	"	"	
Bromodichloromethane	ND	1.0	"	"	"	"	"	"	
Bromoform	ND	1.0	"	"	"	"	"	"	
Bromomethane	ND	1.0	"	"	"	"	"	"	
n-Butylbenzene	ND	1.0	"	"	"	"	"	"	
sec-Butylbenzene	**6.0**	1.0	"	"	"	"	"	"	
tert-Butylbenzene	ND	1.0	"	"	"	"	"	"	
Carbon tetrachloride	ND	0.50	"	"	"	"	"	"	
Chlorobenzene	ND	1.0	"	"	"	"	"	"	
Chloroethane	ND	1.0	"	"	"	"	"	"	
Chloroform	ND	1.0	"	"	"	"	"	"	
Chloromethane	ND	1.0	"	"	"	"	"	"	
2-Chlorotoluene	ND	1.0	"	"	"	"	"	"	
4-Chlorotoluene	ND	1.0	"	"	"	"	"	"	
Dibromochloromethane	ND	1.0	"	"	"	"	"	"	
1,2-Dibromo-3-chloropropane	ND	1.0	"	"	"	"	"	"	
1,2-Dibromoethane (EDB)	ND	1.0	"	"	"	"	"	"	
Dibromomethane	ND	1.0	"	"	"	"	"	"	
1,2-Dichlorobenzene	ND	1.0	"	"	"	"	"	"	
1,3-Dichlorobenzene	ND	1.0	"	"	"	"	"	"	
1,4-Dichlorobenzene	ND	1.0	"	"	"	"	"	"	
Dichlorodifluoromethane	ND	0.50	"	"	"	"	"	"	
1,1-Dichloroethane	ND	1.0	"	"	"	"	"	"	
1,2-Dichloroethane	**2.7**	0.50	"	"	"	"	"	"	
1,1-Dichloroethene	**6.9**	1.0	"	"	"	"	"	"	
cis-1,2-Dichloroethene	**7.0**	1.0	"	"	"	"	"	"	
trans-1,2-Dichloroethene	ND	1.0	"	"	"	"	"	"	
1,2-Dichloropropane	ND	1.0	"	"	"	"	"	"	

SunStar Laboratories, Inc.

Daniel J Chavez

Daniel Chavez, Project Manager

The results in this report apply to the samples analyzed in accordance with the chain of custody document. This analytical report must be reproduced in its entirety.

SunStar Laboratories, Inc.
Providing Quality Analytical Services Nationwide

25712 Commercentre Drive
Lake Forest, California 92630
949.297.5020 Phone
949.297.5027 Fax

Murex	Project: Cenco	
2640 Walnut Ave. Unit F	Project Number: 1003-001-300	**Reported:**
Tustin CA, 92780	Project Manager: Jeremy Squire	02/10/11 16:41

LL_MW707_020411

T110121-06 (Water)

SunStar Laboratories, Inc.

Volatile Organic Compounds by EPA Method 8260B

Analyte	Result	Reporting Limit	Units	Dilution	Batch	Prepared	Analyzed	Method	Notes
1,3-Dichloropropane	ND	1.0	ug/l	1	1020702	02/07/11	02/08/11	EPA 8260B	
2,2-Dichloropropane	ND	1.0	"	"	"	"	"	"	
1,1-Dichloropropene	ND	1.0	"	"	"	"	"	"	
cis-1,3-Dichloropropene	ND	0.50	"	"	"	"	"	"	
trans-1,3-Dichloropropene	ND	0.50	"	"	"	"	"	"	
Hexachlorobutadiene	ND	1.0	"	"	"	"	"	"	
Isopropylbenzene	**2.2**	1.0	"	"	"	"	"	"	
p-Isopropyltoluene	ND	1.0	"	"	"	"	"	"	
Methylene chloride	ND	1.0	"	"	"	"	"	"	
Naphthalene	ND	1.0	"	"	"	"	"	"	
n-Propylbenzene	**3.1**	1.0	"	"	"	"	"	"	
Styrene	ND	1.0	"	"	"	"	"	"	
1,1,2,2-Tetrachloroethane	ND	1.0	"	"	"	"	"	"	
1,1,1,2-Tetrachloroethane	ND	1.0	"	"	"	"	"	"	
Tetrachloroethene	**4.1**	1.0	"	"	"	"	"	"	
1,2,3-Trichlorobenzene	ND	1.0	"	"	"	"	"	"	
1,2,4-Trichlorobenzene	ND	1.0	"	"	"	"	"	"	
1,1,2-Trichloroethane	ND	1.0	"	"	"	"	"	"	
1,1,1-Trichloroethane	ND	1.0	"	"	"	"	"	"	
Trichloroethene	**8.7**	1.0	"	"	"	"	"	"	
Trichlorofluoromethane	ND	1.0	"	"	"	"	"	"	
1,2,3-Trichloropropane	ND	1.0	"	"	"	"	"	"	
1,3,5-Trimethylbenzene	**7.8**	1.0	"	"	"	"	"	"	
1,2,4-Trimethylbenzene	**10**	1.0	"	"	"	"	"	"	
Vinyl chloride	ND	1.0	"	"	"	"	"	"	
Benzene	**520**	25	"	50	"	"	02/08/11	"	
Toluene	**120**	25	"	"	"	"	"	"	
Ethylbenzene	**7.6**	0.50	"	1	"	"	02/08/11	"	
m,p-Xylene	**120**	50	"	50	"	"	02/08/11	"	
o-Xylene	**150**	25	"	"	"	"	"	"	
Tert-amyl methyl ether	ND	2.0	"	1	"	"	"	"	
Tert-butyl alcohol	ND	10	"	"	"	"	02/08/11	"	
Di-isopropyl ether	ND	2.0	"	"	"	"	"	"	

SunStar Laboratories, Inc.

The results in this report apply to the samples analyzed in accordance with the chain of custody document. This analytical report must be reproduced in its entirety.

Daniel Chavez, Project Manager

SunStar Laboratories, Inc.
PROVIDING QUALITY ANALYTICAL SERVICES NATIONWIDE

25712 Commercentre Drive
Lake Forest, California 92630
949.297.5020 Phone
949.297.5027 Fax

Murex	Project: Cenco	
2640 Walnut Ave. Unit F	Project Number: 1003-001-300	**Reported:**
Tustin CA, 92780	Project Manager: Jeremy Squire	02/10/11 16:41

LL_MW707_020411

T110121-06 (Water)

Analyte	Result	Reporting Limit	Units	Dilution	Batch	Prepared	Analyzed	Method	Notes
SunStar Laboratories, Inc.									
Volatile Organic Compounds by EPA Method 8260B									
Ethyl tert-butyl ether	ND	2.0	ug/l	1	1020702	02/07/11	02/08/11	EPA 8260B	
Methyl tert-butyl ether	**15**	1.0	"	"	"	"	"	"	
1,1,2-trichloro-1,2,2-trifluoroethane (CFC 113)	ND	5.0	"	"	"	"	"	"	
Surrogate 4-Bromofluorobenzene		*196 %*	*77.1-110*		"	"	"	"	*S-GC*
Surrogate Dibromofluoromethane		*92.6 %*	*66.3-111*		"	"	"	"	
Surrogate Toluene-d8		*105 %*	*84.7-109*		"	"	"	"	

SunStar Laboratories, Inc.

The results in this report apply to the samples analyzed in accordance with the chain of custody document. This analytical report must be reproduced in its entirety.

Daniel Chavez, Project Manager

SunStar Laboratories, Inc.
Providing Quality Analytical Services Nationwide

25712 Commercentre Drive
Lake Forest, California 92630
949.297.5020 Phone
949.297.5027 Fax

Murex	Project: Cenco	
2640 Walnut Ave. Unit F	Project Number: 1003-001-300	**Reported:**
Tustin CA, 92780	Project Manager: Jeremy Squire	02/10/11 16:41

LL_MW708_020411

T110121-07 (Water)

Analyte	Result	Reporting Limit	Units	Dilution	Batch	Prepared	Analyzed	Method	Notes
SunStar Laboratories, Inc.									
Purgeable Petroleum Hydrocarbons by EPA 8015C									
C6-C12 (GRO)	**530000**	1200	ug/l	25	1020701	02/07/11	02/09/11	EPA 8015C	
Surrogate 4-Bromofluorobenzene		*261 %*	*72.6-146*		"	"	"	"	*S-GRO*
Volatile Organic Compounds by EPA Method 8260B									
Bromobenzene	ND	1.0	ug/l	1	1020702	02/07/11	02/08/11	EPA 8260B	
Bromochloromethane	ND	1.0	"	"	"	"	"	"	
Bromodichloromethane	ND	1.0	"	"	"	"	"	"	
Bromoform	ND	1.0	"	"	"	"	"	"	
Bromomethane	ND	1.0	"	"	"	"	"	"	
n-Butylbenzene	ND	1.0	"	"	"	"	"	"	
sec-Butylbenzene	**5.8**	1.0	"	"	"	"	"	"	
tert-Butylbenzene	ND	1.0	"	"	"	"	"	"	
Carbon tetrachloride	ND	0.50	"	"	"	"	"	"	
Chlorobenzene	ND	1.0	"	"	"	"	"	"	
Chloroethane	ND	1.0	"	"	"	"	"	"	
Chloroform	ND	1.0	"	"	"	"	"	"	
Chloromethane	ND	1.0	"	"	"	"	"	"	
2-Chlorotoluene	ND	1.0	"	"	"	"	"	"	
4-Chlorotoluene	ND	1.0	"	"	"	"	"	"	
Dibromochloromethane	ND	1.0	"	"	"	"	"	"	
1,2-Dibromo-3-chloropropane	ND	1.0	"	"	"	"	"	"	
1,2-Dibromoethane (EDB)	ND	1.0	"	"	"	"	"	"	
Dibromomethane	ND	1.0	"	"	"	"	"	"	
1,2-Dichlorobenzene	ND	1.0	"	"	"	"	"	"	
1,3-Dichlorobenzene	ND	1.0	"	"	"	"	"	"	
1,4-Dichlorobenzene	ND	1.0	"	"	"	"	"	"	
Dichlorodifluoromethane	ND	0.50	"	"	"	"	"	"	
1,1-Dichloroethane	ND	1.0	"	"	"	"	"	"	
1,2-Dichloroethane	ND	0.50	"	"	"	"	"	"	
1,1-Dichloroethene	ND	1.0	"	"	"	"	"	"	
cis-1,2-Dichloroethene	ND	1.0	"	"	"	"	"	"	
trans-1,2-Dichloroethene	ND	1.0	"	"	"	"	"	"	
1,2-Dichloropropane	ND	1.0	"	"	"	"	"	"	

SunStar Laboratories, Inc.

The results in this report apply to the samples analyzed in accordance with the chain of custody document. This analytical report must be reproduced in its entirety.

Daniel Chavez, Project Manager

SunStar Laboratories, Inc.
Providing Quality Analytical Services Nationwide

25712 Commercentre Drive
Lake Forest, California 92630
949.297.5020 Phone
949.297.5027 Fax

Murex	Project: Cenco	
2640 Walnut Ave. Unit F	Project Number: 1003-001-300	**Reported:**
Tustin CA, 92780	Project Manager: Jeremy Squire	02/10/11 16:41

LL_MW708_020411

T110121-07 (Water)

SunStar Laboratories, Inc.

Volatile Organic Compounds by EPA Method 8260B

Analyte	Result	Reporting Limit	Units	Dilution	Batch	Prepared	Analyzed	Method	Notes
1,3-Dichloropropane	ND	1.0	ug/l	1	1020702	02/07/11	02/08/11	EPA 8260B	
2,2-Dichloropropane	ND	1.0	"	"	"	"	"	"	
1,1-Dichloropropene	ND	1.0	"	"	"	"	"	"	
cis-1,3-Dichloropropene	ND	0.50	"	"	"	"	"	"	
trans-1,3-Dichloropropene	ND	0.50	"	"	"	"	"	"	
Hexachlorobutadiene	ND	1.0	"	"	"	"	"	"	
Isopropylbenzene	**20**	1.0	"	"	"	"	"	"	
p-Isopropyltoluene	**74**	1.0	"	"	"	"	"	"	
Methylene chloride	ND	1.0	"	"	"	"	"	"	
Naphthalene	**370**	50	"	50	"	"	02/09/11	"	
n-Propylbenzene	**38**	1.0	"	1	"	"	02/08/11	"	
Styrene	ND	1.0	"	"	"	"	"	"	
1,1,2,2-Tetrachloroethane	**28**	1.0	"	"	"	"	"	"	
1,1,1,2-Tetrachloroethane	ND	1.0	"	"	"	"	"	"	
Tetrachloroethene	ND	1.0	"	"	"	"	"	"	
1,2,3-Trichlorobenzene	ND	1.0	"	"	"	"	"	"	
1,2,4-Trichlorobenzene	ND	1.0	"	"	"	"	"	"	
1,1,2-Trichloroethane	ND	1.0	"	"	"	"	"	"	
1,1,1-Trichloroethane	ND	1.0	"	"	"	"	"	"	
Trichloroethene	ND	1.0	"	"	"	"	"	"	
Trichlorofluoromethane	ND	1.0	"	"	"	"	"	"	
1,2,3-Trichloropropane	ND	1.0	"	"	"	"	"	"	
1,3,5-Trimethylbenzene	**92**	1.0	"	"	"	"	"	"	
1,2,4-Trimethylbenzene	**2200**	50	"	50	"	"	02/09/11	"	
Vinyl chloride	ND	1.0	"	1	"	"	02/08/11	"	
Benzene	**1400**	25	"	50	"	"	02/09/11	"	
Toluene	**420**	25	"	"	"	"	"	"	
Ethylbenzene	**3000**	25	"	"	"	"	"	"	
m,p-Xylene	**8100**	50	"	"	"	"	"	"	
o-Xylene	**13**	0.50	"	1	"	"	02/08/11	"	
Tert-amyl methyl ether	ND	2.0	"	"	"	"	02/09/11	"	
Tert-butyl alcohol	ND	10	"	"	"	"	02/08/11	"	
Di-isopropyl ether	ND	2.0	"	"	"	"	"	"	

SunStar Laboratories, Inc.

The results in this report apply to the samples analyzed in accordance with the chain of custody document. This analytical report must be reproduced in its entirety.

Daniel Chavez, Project Manager

SunStar Laboratories, Inc.
PROVIDING QUALITY ANALYTICAL SERVICES NATIONWIDE

25712 Commercentre Drive
Lake Forest, California 92630
949.297.5020 Phone
949.297.5027 Fax

Murex	Project: Cenco	
2640 Walnut Ave. Unit F	Project Number: 1003-001-300	**Reported:**
Tustin CA, 92780	Project Manager: Jeremy Squire	02/10/11 16:41

LL_MW708_020411

T110121-07 (Water)

Analyte	Result	Reporting Limit	Units	Dilution	Batch	Prepared	Analyzed	Method	Notes
SunStar Laboratories, Inc.									
Volatile Organic Compounds by EPA Method 8260B									
Ethyl tert-butyl ether	ND	2.0	ug/l	1	1020702	02/07/11	02/08/11	EPA 8260B	
Methyl tert-butyl ether	**330**	50	"	50	"	"	02/09/11	"	
1,1,2-trichloro-1,2,2-trifluoroethane (CFC 113)	ND	5.0	"	1	"	"	02/08/11	"	
Surrogate 4-Bromofluorobenzene		*285 %*	*77.1-110*		"	"	"	"	*S-GC*
Surrogate Dibromofluoromethane		*76.6 %*	*66.3-111*		"	"	"	"	
Surrogate Toluene-d8		*99.8 %*	*84.7-109*		"	"	"	"	

SunStar Laboratories, Inc.

Daniel Chavez, Project Manager

The results in this report apply to the samples analyzed in accordance with the chain of custody document. This analytical report must be reproduced in its entirety.

SunStar Laboratories, Inc.
Providing Quality Analytical Services Nationwide

25712 Commercentre Drive
Lake Forest, California 92630
949.297.5020 Phone
949.297.5027 Fax

Murex	Project: Cenco	
2640 Walnut Ave. Unit F	Project Number: 1003-001-300	**Reported:**
Tustin CA, 92780	Project Manager: Jeremy Squire	02/10/11 16:41

LL_MW709_020411

T110121-08 (Water)

Analyte	Result	Reporting Limit	Units	Dilution	Batch	Prepared	Analyzed	Method	Notes
SunStar Laboratories, Inc.									
Purgeable Petroleum Hydrocarbons by EPA 8015C									
C6-C12 (GRO)	**500**	50	ug/l	1	1020701	02/07/11	02/09/11	EPA 8015C	
Surrogate 4-Bromofluorobenzene		*119 %*	*72.6-146*		"	"	"	"	
Volatile Organic Compounds by EPA Method 8260B									
Bromobenzene	ND	1.0	ug/l	1	1020702	02/07/11	02/08/11	EPA 8260B	
Bromochloromethane	ND	1.0	"	"	"	"	"	"	
Bromodichloromethane	ND	1.0	"	"	"	"	"	"	
Bromoform	ND	1.0	"	"	"	"	"	"	
Bromomethane	ND	1.0	"	"	"	"	"	"	
n-Butylbenzene	ND	1.0	"	"	"	"	"	"	
sec-Butylbenzene	ND	1.0	"	"	"	"	"	"	
tert-Butylbenzene	ND	1.0	"	"	"	"	"	"	
Carbon tetrachloride	ND	0.50	"	"	"	"	"	"	
Chlorobenzene	ND	1.0	"	"	"	"	"	"	
Chloroethane	ND	1.0	"	"	"	"	"	"	
Chloroform	ND	1.0	"	"	"	"	"	"	
Chloromethane	ND	1.0	"	"	"	"	"	"	
2-Chlorotoluene	ND	1.0	"	"	"	"	"	"	
4-Chlorotoluene	ND	1.0	"	"	"	"	"	"	
Dibromochloromethane	ND	1.0	"	"	"	"	"	"	
1,2-Dibromo-3-chloropropane	ND	1.0	"	"	"	"	"	"	
1,2-Dibromoethane (EDB)	ND	1.0	"	"	"	"	"	"	
Dibromomethane	ND	1.0	"	"	"	"	"	"	
1,2-Dichlorobenzene	ND	1.0	"	"	"	"	"	"	
1,3-Dichlorobenzene	ND	1.0	"	"	"	"	"	"	
1,4-Dichlorobenzene	ND	1.0	"	"	"	"	"	"	
Dichlorodifluoromethane	ND	0.50	"	"	"	"	"	"	
1,1-Dichloroethane	ND	1.0	"	"	"	"	"	"	
1,2-Dichloroethane	ND	0.50	"	"	"	"	"	"	
1,1-Dichloroethene	ND	1.0	"	"	"	"	"	"	
cis-1,2-Dichloroethene	ND	1.0	"	"	"	"	"	"	
trans-1,2-Dichloroethene	ND	1.0	"	"	"	"	"	"	

SunStar Laboratories, Inc.

The results in this report apply to the samples analyzed in accordance with the chain of custody document. This analytical report must be reproduced in its entirety.

Daniel Chavez, Project Manager

SunStar Laboratories, Inc.
Providing Quality Analytical Services Nationwide

25712 Commercentre Drive
Lake Forest, California 92630
949.297.5020 Phone
949.297.5027 Fax

Murex	Project: Cenco	
2640 Walnut Ave. Unit F	Project Number: 1003-001-300	**Reported:**
Tustin CA, 92780	Project Manager: Jeremy Squire	02/10/11 16:41

LL_MW709_020411

T110121-08 (Water)

SunStar Laboratories, Inc.

Volatile Organic Compounds by EPA Method 8260B

Analyte	Result	Reporting Limit	Units	Dilution	Batch	Prepared	Analyzed	Method	Notes
1,2-Dichloropropane	ND	1.0	ug/l	1	1020702	02/07/11	02/08/11	EPA 8260B	
1,3-Dichloropropane	ND	1.0	"	"	"	"	"	"	
2,2-Dichloropropane	ND	1.0	"	"	"	"	"	"	
1,1-Dichloropropene	ND	1.0	"	"	"	"	"	"	
cis-1,3-Dichloropropene	ND	0.50	"	"	"	"	"	"	
trans-1,3-Dichloropropene	ND	0.50	"	"	"	"	"	"	
Hexachlorobutadiene	ND	1.0	"	"	"	"	"	"	
Isopropylbenzene	ND	1.0	"	"	"	"	"	"	
p-Isopropyltoluene	ND	1.0	"	"	"	"	"	"	
Methylene chloride	ND	1.0	"	"	"	"	"	"	
Naphthalene	ND	1.0	"	"	"	"	"	"	
n-Propylbenzene	ND	1.0	"	"	"	"	"	"	
Styrene	ND	1.0	"	"	"	"	"	"	
1,1,2,2-Tetrachloroethane	ND	1.0	"	"	"	"	"	"	
1,1,1,2-Tetrachloroethane	ND	1.0	"	"	"	"	"	"	
Tetrachloroethene	ND	1.0	"	"	"	"	"	"	
1,2,3-Trichlorobenzene	ND	1.0	"	"	"	"	"	"	
1,2,4-Trichlorobenzene	ND	1.0	"	"	"	"	"	"	
1,1,2-Trichloroethane	ND	1.0	"	"	"	"	"	"	
1,1,1-Trichloroethane	ND	1.0	"	"	"	"	"	"	
Trichloroethene	ND	1.0	"	"	"	"	"	"	
Trichlorofluoromethane	ND	1.0	"	"	"	"	"	"	
1,2,3-Trichloropropane	ND	1.0	"	"	"	"	"	"	
1,3,5-Trimethylbenzene	ND	1.0	"	"	"	"	"	"	
1,2,4-Trimethylbenzene	ND	1.0	"	"	"	"	"	"	
Vinyl chloride	ND	1.0	"	"	"	"	"	"	
Benzene	**16**	0.50	"	"	"	"	"	"	
Toluene	**1.0**	0.50	"	"	"	"	"	"	
Ethylbenzene	ND	0.50	"	"	"	"	"	"	
m,p-Xylene	**4.8**	1.0	"	"	"	"	"	"	
o-Xylene	**1.1**	0.50	"	"	"	"	"	"	
Tert-amyl methyl ether	ND	2.0	"	"	"	"	"	"	

SunStar Laboratories, Inc.

Daniel J Chávez

Daniel Chavez, Project Manager

The results in this report apply to the samples analyzed in accordance with the chain of custody document. This analytical report must be reproduced in its entirety.

SunStar Laboratories, Inc.
Providing Quality Analytical Services Nationwide

25712 Commercentre Drive
Lake Forest, California 92630
949.297.5020 Phone
949.297.5027 Fax

Murex	Project: Cenco	
2640 Walnut Ave. Unit F	Project Number: 1003-001-300	**Reported:**
Tustin CA, 92780	Project Manager: Jeremy Squire	02/10/11 16:41

LL_MW709_020411

T110121-08 (Water)

Analyte	Result	Reporting Limit	Units	Dilution	Batch	Prepared	Analyzed	Method	Notes
SunStar Laboratories, Inc.									
Volatile Organic Compounds by EPA Method 8260B									
Tert-butyl alcohol	ND	10	ug/l	1	1020702	02/07/11	02/08/11	EPA 8260B	
Di-isopropyl ether	ND	2.0	"	"	"	"	"	"	
Ethyl tert-butyl ether	ND	2.0	"	"	"	"	"	"	
Methyl tert-butyl ether	**2.8**	1.0	"	"	"	"	"	"	
1,1,2-trichloro-1,2,2-trifluoroethane (CFC 113)	ND	5.0	"	"	"	"	"	"	
Surrogate 4-Bromofluorobenzene		*120 %*	*77.1-110*		"	"	"	"	*S-GC*
Surrogate Dibromofluoromethane		*87.4 %*	*66.3-111*		"	"	"	"	
Surrogate Toluene-d8		*109 %*	*84.7-109*		"	"	"	"	

SunStar Laboratories, Inc.

The results in this report apply to the samples analyzed in accordance with the chain of custody document. This analytical report must be reproduced in its entirety.

Daniel Chavez, Project Manager

SunStar Laboratories, Inc.
Providing Quality Analytical Services Nationwide

25712 Commercentre Drive
Lake Forest, California 92630
949.297.5020 Phone
949.297.5027 Fax

Murex	Project: Cenco	
2640 Walnut Ave. Unit F	Project Number: 1003-001-300	**Reported:**
Tustin CA, 92780	Project Manager: Jeremy Squire	02/10/11 16:41

Purgeable Petroleum Hydrocarbons by EPA 8015C - Quality Control

SunStar Laboratories, Inc.

Analyte	Result	Reporting Limit	Units	Spike Level	Source Result	%REC	%REC Limits	RPD	RPD Limit	Notes
Batch 1020701 - EPA 5030 GC										
Blank (1020701-BLK1)				Prepared: 02/07/11	Analyzed: 02/09/11					
C6-C12 (GRO)	ND	50	ug/l							
Surrogate 4-Bromofluorobenzene	*197*		*"*	*200*		*98.3*	*72.6-146*			
LCS (1020701-BS1)				Prepared: 02/07/11	Analyzed: 02/09/11					
C6-C12 (GRO)	5140	50	ug/l	5500		93.5	75-125			
Surrogate 4-Bromofluorobenzene	*209*		*"*	*200*		*104*	*72.6-146*			
LCS Dup (1020701-BSD1)				Prepared: 02/07/11	Analyzed: 02/09/11					
C6-C12 (GRO)	5110	50	ug/l	5500		93.0	75-125	0.523	20	
Surrogate 4-Bromofluorobenzene	*197*		*"*	*200*		*98.3*	*72.6-146*			

SunStar Laboratories, Inc.

The results in this report apply to the samples analyzed in accordance with the chain of custody document. This analytical report must be reproduced in its entirety.

Daniel Chavez, Project Manager

SunStar Laboratories, Inc.
Providing Quality Analytical Services Nationwide

25712 Commercentre Drive
Lake Forest, California 92630
949.297.5020 Phone
949.297.5027 Fax

Murex	Project: Cenco	
2640 Walnut Ave. Unit F	Project Number: 1003-001-300	**Reported:**
Tustin CA, 92780	Project Manager: Jeremy Squire	02/10/11 16:41

Volatile Organic Compounds by EPA Method 8260B - Quality Control

SunStar Laboratories, Inc.

Analyte	Result	Reporting Limit	Units	Spike Level	Source Result	%REC	%REC Limits	RPD	RPD Limit	Notes
Batch 1020702 - EPA 5030 GCMS										
Blank (1020702-BLK1)				Prepared & Analyzed: 02/07/11						
Bromobenzene	ND	1.0	ug/l							
Bromochloromethane	ND	1.0	"							
Bromodichloromethane	ND	1.0	"							
Bromoform	ND	1.0	"							
Bromomethane	ND	1.0	"							
n-Butylbenzene	ND	1.0	"							
sec-Butylbenzene	ND	1.0	"							
tert-Butylbenzene	ND	1.0	"							
Carbon tetrachloride	ND	0.50	"							
Chlorobenzene	ND	1.0	"							
Chloroethane	ND	1.0	"							
Chloroform	ND	1.0	"							
Chloromethane	ND	1.0	"							
2-Chlorotoluene	ND	1.0	"							
4-Chlorotoluene	ND	1.0	"							
Dibromochloromethane	ND	1.0	"							
1,2-Dibromo-3-chloropropane	ND	1.0	"							
1,2-Dibromoethane (EDB)	ND	1.0	"							
Dibromomethane	ND	1.0	"							
1,2-Dichlorobenzene	ND	1.0	"							
1,3-Dichlorobenzene	ND	1.0	"							
1,4-Dichlorobenzene	ND	1.0	"							
Dichlorodifluoromethane	ND	0.50	"							
1,1-Dichloroethane	ND	1.0	"							
1,2-Dichloroethane	ND	0.50	"							
1,1-Dichloroethene	ND	1.0	"							
cis-1,2-Dichloroethene	ND	1.0	"							
trans-1,2-Dichloroethene	ND	1.0	"							
1,2-Dichloropropane	ND	1.0	"							
1,3-Dichloropropane	ND	1.0	"							
2,2-Dichloropropane	ND	1.0	"							
1,1-Dichloropropene	ND	1.0	"							
cis-1,3-Dichloropropene	ND	0.50	"							
trans-1,3-Dichloropropene	ND	0.50	"							
Hexachlorobutadiene	ND	1.0	"							
Isopropylbenzene	ND	1.0	"							

SunStar Laboratories, Inc.

The results in this report apply to the samples analyzed in accordance with the chain of custody document. This analytical report must be reproduced in its entirety.

Daniel Chavez, Project Manager

SunStar Laboratories, Inc.
Providing Quality Analytical Services Nationwide

25712 Commercentre Drive
Lake Forest, California 92630
949.297.5020 Phone
949.297.5027 Fax

Murex	Project: Cenco	
2640 Walnut Ave. Unit F	Project Number: 1003-001-300	**Reported:**
Tustin CA, 92780	Project Manager: Jeremy Squire	02/10/11 16:41

Volatile Organic Compounds by EPA Method 8260B - Quality Control

SunStar Laboratories, Inc.

Analyte	Result	Reporting Limit	Units	Spike Level	Source Result	%REC	%REC Limits	RPD	RPD Limit	Notes
Batch 1020702 - EPA 5030 GCMS										
Blank (1020702-BLK1)				Prepared & Analyzed: 02/07/11						
p-Isopropyltoluene	ND	1.0	ug/l							
Methylene chloride	ND	1.0	"							
Naphthalene	ND	1.0	"							
n-Propylbenzene	ND	1.0	"							
Styrene	ND	1.0	"							
1,1,2,2-Tetrachloroethane	ND	1.0	"							
1,1,1,2-Tetrachloroethane	ND	1.0	"							
Tetrachloroethene	ND	1.0	"							
1,2,3-Trichlorobenzene	ND	1.0	"							
1,2,4-Trichlorobenzene	ND	1.0	"							
1,1,2-Trichloroethane	ND	1.0	"							
1,1,1-Trichloroethane	ND	1.0	"							
Trichloroethene	ND	1.0	"							
Trichlorofluoromethane	ND	1.0	"							
1,2,3-Trichloropropane	ND	1.0	"							
1,3,5-Trimethylbenzene	ND	1.0	"							
1,2,4-Trimethylbenzene	ND	1.0	"							
Vinyl chloride	ND	1.0	"							
Benzene	ND	0.50	"							
Toluene	ND	0.50	"							
Ethylbenzene	ND	0.50	"							
m,p-Xylene	ND	1.0	"							
o-Xylene	ND	0.50	"							
Tert-amyl methyl ether	ND	2.0	"							
Tert-butyl alcohol	ND	10	"							
Di-isopropyl ether	ND	2.0	"							
Ethyl tert-butyl ether	ND	2.0	"							
Methyl tert-butyl ether	ND	1.0	"							
1,1,2-trichloro-1,2,2-trifluoroethane (CFC 113)	ND	5.0	"							
Surrogate 4-Bromofluorobenzene	*7.65*		*"*	*8.00*		*95.6*	*77.1-110*			
Surrogate Dibromofluoromethane	*6.55*		*"*	*8.00*		*81.9*	*66.3-111*			
Surrogate Toluene-d8	*8.03*		*"*	*8.00*		*100*	*84.7-109*			

SunStar Laboratories, Inc.

The results in this report apply to the samples analyzed in accordance with the chain of custody document. This analytical report must be reproduced in its entirety.

Daniel Chavez, Project Manager

SunStar Laboratories, Inc.
Providing Quality Analytical Services Nationwide

25712 Commercentre Drive
Lake Forest, California 92630
949.297.5020 Phone
949.297.5027 Fax

Murex	Project: Cenco	
2640 Walnut Ave. Unit F	Project Number: 1003-001-300	**Reported:**
Tustin CA, 92780	Project Manager: Jeremy Squire	02/10/11 16:41

Volatile Organic Compounds by EPA Method 8260B - Quality Control

SunStar Laboratories, Inc.

Analyte	Result	Reporting Limit	Units	Spike Level	Source Result	%REC	%REC Limits	RPD	RPD Limit	Notes
Batch 1020702 - EPA 5030 GCMS										
LCS (1020702-BS1)				Prepared & Analyzed: 02/07/11						
Chlorobenzene	22.0	1.0	ug/l	20.0		110	75-125			
1,1-Dichloroethene	20.0	1.0	"	20.0		99.8	75-125			
Trichloroethene	20 9	1.0	"	20.0		104	75-125			
Benzene	19 5	0.50	"	20.0		97.6	75-125			
Toluene	19.4	0.50	"	20.0		97.2	75-125			
Surrogate 4-Bromofluorobenzene	*8.64*		*"*	*8.00*		*108*	*77.1-110*			
Surrogate Dibromofluoromethane	*6.41*		*"*	*8.00*		*80.1*	*66.3-111*			
Surrogate Toluene-d8	*7.59*		*"*	*8.00*		*94.9*	*84.7-109*			
LCS Dup (1020702-BSD1)				Prepared & Analyzed: 02/07/11						
Chlorobenzene	21 3	1.0	ug/l	20.0		107	75-125	3.00	20	
1,1-Dichloroethene	22 2	1.0	"	20.0		111	75-125	10.6	20	
Trichloroethene	20.8	1.0	"	20.0		104	75-125	0.384	20	
Benzene	19 3	0.50	"	20.0		96.6	75-125	0.979	20	
Toluene	20 1	0.50	"	20.0		101	75-125	3.44	20	
Surrogate 4-Bromofluorobenzene	*8.65*		*"*	*8.00*		*108*	*77.1-110*			
Surrogate Dibromofluoromethane	*6.84*		*"*	*8.00*		*85.5*	*66.3-111*			
Surrogate Toluene-d8	*7.99*		*"*	*8.00*		*99.9*	*84.7-109*			

SunStar Laboratories, Inc.

The results in this report apply to the samples analyzed in accordance with the chain of custody document. This analytical report must be reproduced in its entirety.

Daniel Chavez, Project Manager

SunStar Laboratories, Inc.
PROVIDING QUALITY ANALYTICAL SERVICES NATIONWIDE

25712 Commercentre Drive
Lake Forest, California 92630
949.297.5020 Phone
949.297.5027 Fax

Murex	Project: Cenco	
2640 Walnut Ave. Unit F	Project Number: 1003-001-300	**Reported:**
Tustin CA, 92780	Project Manager: Jeremy Squire	02/10/11 16:41

Notes and Definitions

S-GRO	Surrogate recovery high due to co-elution with gasoline range organics. Surrogate recovery for associated blank is within acceptance limits.
S-GC	Surrogate recovery outside of established control limits. The data was accepted based on valid recovery of the remaining surrogate(s).
DET	Analyte DETECTED
ND	Analyte NOT DETECTED at or above the reporting limit
NR	Not Reported
dry	Sample results reported on a dry weight basis
RPD	Relative Percent Difference

SunStar Laboratories, Inc.

Daniel J Chávez

Daniel Chavez, Project Manager

The results in this report apply to the samples analyzed in accordance with the chain of custody document. This analytical report must be reproduced in its entirety.

SunStar Laboratories, Inc.
25712 Commercentre Dr
Lake Forest, CA 92630
949-297-5020

Chain of Custody Record

Client: Murex Environmental, Inc.
Address: 2640 Walnut Ave, Unit F
Phone: (714) 508-0800 Fax: (714) 508-0880
Project Manager: Jeremy Squire (714) 604-5836

Date: 2·4·2011 Page: 1 Of 1
Project Name: CENCO
Collector: ROBERT HESS Client Project #: 1003-001-300
Batch #: T110121 EDF #:

Sample ID	Date Sampled	Time	Sample Type	8260 (VOCs NO OXY)	8260 + OXY	1,4-Dioxane	8270 Semi-Volatiles (PAHs, etc)	8021 BTEX	8015M (TPH gasoline)	8015M (TPH diesel)	Hexavalent Chromium (7199)	6010/7000 Title 22 Metals	PCBs				Total # of containers	Comments/Preservative	Laboratory ID #
LL_MW701_020411	2·4·11	1120	H_2O		X				X								6		01
LL_MW702_020411		0900			X				X								6		02
LL_MW703_020411		1100			X				X								6		03
LL_MW705_020411		1020			X				X								6		04
LL_MW706_020411		1000			X				X								6		05
LL_MW707_020411		1220			X				X								6		06
LL_MW708_020411		1400			X				X								6		07
LL_MW709_020411		1455			X				X								6		08

Relinquished by: (signature)	Date / Time	Received by: (signat	Date / Time
[signature]	2/4/11 1640	[signature]	2/4/11 1640
Relinquished by: (signature)	Date / Time	Received by: (signat	Date / Time
Relinquished by: (signature)	Date / Time	Received by: (signat	Date / Time

Total # of containers	48
Chain of Custody seals	N
Seals intact? Y/N/NA	N/A
Received good condition/cold	Y
Turn around time:	

Notes: 5.0°

Sample disposal Instructions: Disposal @ $2.00 each ____ Return to client ____ Pickup ____

SunStar Laboratories, Inc.
PROVIDING QUALITY ANALYTICAL SERVICES NATIONWIDE

SAMPLE RECEIVING REVIEW SHEET

BATCH # T110121

Client Name: MUREX Project: CENCO

Received by: DAN Date/Time Received: 2/4/11 1640

Delivered by : ☐ Client ☒ SunStar Courier ☐ GSO ☐ FedEx ☐ Other _____

Total number of coolers received 0 **Temp criteria = 6°C > 0°C (no frozen containers)**

Temperature: cooler #1 5.2 °C +/- the CF (- 0.2°C) = 5.0 °C corrected temperature

cooler #2 _____ °C +/- the CF (- 0.2°C) = _____ °C corrected temperature

cooler #3 _____ °C +/- the CF (- 0.2°C) = _____ °C corrected temperature

Samples outside temp. but received on ice, w/in 6 hours of final sampling.	☒ Yes	☐ No*	☐ N/A
Custody Seals Intact on Cooler/Sample	☐ Yes	☐ No*	☒ N/A
Sample Containers Intact	☒ Yes	☐ No*	
Sample labels match COC ID's	☒ Yes	☐ No*	
Total number of containers received match COC	☒ Yes	☐ No*	
Proper containers received for analyses requested on COC	☒ Yes	☐ No*	
Proper preservative indicated on COC/containers for analyses requested	☒ Yes	☐ No*	☐ N/A

Complete shipment received in good condition with correct temperatures, containers, labels, volumes preservatives and within method specified holding times. ☒ **Yes** ☐ **No***

* Complete Non-Conformance Receiving Sheet if checked Cooler/Sample Review - Initials and date BC 2/5/11

Comments:

SunStar Laboratories, Inc.
PROVIDING QUALITY ANALYTICAL SERVICES NATIONWIDE

25712 Commercentre Drive
Lake Forest, California 92630
949.297.5020 Phone
949.297.5027 Fax

10 February 2011

Jeremy Squire
Murex
2640 Walnut Ave. Unit F
Tustin, CA 92780

RE: Cenco

Enclosed are the results of analyses for samples received by the laboratory on 02/04/11 16:55. If you have any questions concerning this report, please feel free to contact me.

Sincerely,

Daniel Chavez
Project Manager

SunStar Laboratories, Inc.
PROVIDING QUALITY ANALYTICAL SERVICES NATIONWIDE

25712 Commercentre Drive
Lake Forest, California 92630
949.297.5020 Phone
949.297.5027 Fax

Murex	Project: Cenco	
2640 Walnut Ave. Unit F	Project Number: 1003-001-300	**Reported:**
Tustin CA, 92780	Project Manager: Jeremy Squire	02/10/11 16:43

ANALYTICAL REPORT FOR SAMPLES

Sample ID	Laboratory ID	Matrix	Date Sampled	Date Received
LL_W1_020411	T110122-01	Water	02/04/11 10:00	02/04/11 16:55
LL_MW503B_020411	T110122-02	Water	02/04/11 12:30	02/04/11 16:55
LL_W11_020411	T110122-03	Water	02/04/11 16:00	02/04/11 16:55
TB_020411	T110122-04	Water	02/04/11 00:00	02/04/11 16:55

SunStar Laboratories, Inc.

The results in this report apply to the samples analyzed in accordance with the chain of custody document. This analytical report must be reproduced in its entirety.

Daniel Chavez, Project Manager

SunStar Laboratories, Inc.
Providing Quality Analytical Services Nationwide

25712 Commercentre Drive
Lake Forest, California 92630
949.297.5020 Phone
949.297.5027 Fax

Murex	Project: Cenco	
2640 Walnut Ave. Unit F	Project Number: 1003-001-300	**Reported:**
Tustin CA, 92780	Project Manager: Jeremy Squire	02/10/11 16:43

LL_W1_020411

T110122-01 (Water)

Analyte	Result	Reporting Limit	Units	Dilution	Batch	Prepared	Analyzed	Method	Notes
SunStar Laboratories, Inc.									
Purgeable Petroleum Hydrocarbons by EPA 8015C									
C6-C12 (GRO)	**200**	50	ug/l	1	1020701	02/07/11	02/09/11	EPA 8015C	
Surrogate 4-Bromofluorobenzene		*95.9 %*	*72.6-146*		"	"	"	"	
Volatile Organic Compounds by EPA Method 8260B									
Bromobenzene	ND	1.0	ug/l	1	1020702	02/07/11	02/08/11	EPA 8260B	
Bromochloromethane	ND	1.0	"	"	"	"	"	"	
Bromodichloromethane	ND	1.0	"	"	"	"	"	"	
Bromoform	ND	1.0	"	"	"	"	"	"	
Bromomethane	ND	1.0	"	"	"	"	"	"	
n-Butylbenzene	ND	1.0	"	"	"	"	"	"	
sec-Butylbenzene	ND	1.0	"	"	"	"	"	"	
tert-Butylbenzene	ND	1.0	"	"	"	"	"	"	
Carbon tetrachloride	ND	0.50	"	"	"	"	"	"	
Chlorobenzene	ND	1.0	"	"	"	"	"	"	
Chloroethane	ND	1.0	"	"	"	"	"	"	
Chloroform	ND	1.0	"	"	"	"	"	"	
Chloromethane	ND	1.0	"	"	"	"	"	"	
2-Chlorotoluene	ND	1.0	"	"	"	"	"	"	
4-Chlorotoluene	ND	1.0	"	"	"	"	"	"	
Dibromochloromethane	ND	1.0	"	"	"	"	"	"	
1,2-Dibromo-3-chloropropane	ND	1.0	"	"	"	"	"	"	
1,2-Dibromoethane (EDB)	ND	1.0	"	"	"	"	"	"	
Dibromomethane	ND	1.0	"	"	"	"	"	"	
1,2-Dichlorobenzene	ND	1.0	"	"	"	"	"	"	
1,3-Dichlorobenzene	ND	1.0	"	"	"	"	"	"	
1,4-Dichlorobenzene	ND	1.0	"	"	"	"	"	"	
Dichlorodifluoromethane	ND	0.50	"	"	"	"	"	"	
1,1-Dichloroethane	ND	1.0	"	"	"	"	"	"	
1,2-Dichloroethane	ND	0.50	"	"	"	"	"	"	
1,1-Dichloroethene	ND	1.0	"	"	"	"	"	"	
cis-1,2-Dichloroethene	ND	1.0	"	"	"	"	"	"	
trans-1,2-Dichloroethene	ND	1.0	"	"	"	"	"	"	

SunStar Laboratories, Inc.

The results in this report apply to the samples analyzed in accordance with the chain of custody document. This analytical report must be reproduced in its entirety.

Daniel Chavez, Project Manager

SunStar Laboratories, Inc.
Providing Quality Analytical Services Nationwide

25712 Commercentre Drive
Lake Forest, California 92630
949.297.5020 Phone
949.297.5027 Fax

Murex	Project: Cenco	
2640 Walnut Ave. Unit F	Project Number: 1003-001-300	**Reported:**
Tustin CA, 92780	Project Manager: Jeremy Squire	02/10/11 16:43

LL_W1_020411

T110122-01 (Water)

SunStar Laboratories, Inc.

Volatile Organic Compounds by EPA Method 8260B

Analyte	Result	Reporting Limit	Units	Dilution	Batch	Prepared	Analyzed	Method	Notes
1,2-Dichloropropane	ND	1.0	ug/l	1	1020702	02/07/11	02/08/11	EPA 8260B	
1,3-Dichloropropane	ND	1.0	"	"	"	"	"	"	
2,2-Dichloropropane	ND	1.0	"	"	"	"	"	"	
1,1-Dichloropropene	ND	1.0	"	"	"	"	"	"	
cis-1,3-Dichloropropene	ND	0.50	"	"	"	"	"	"	
trans-1,3-Dichloropropene	ND	0.50	"	"	"	"	"	"	
Hexachlorobutadiene	ND	1.0	"	"	"	"	"	"	
Isopropylbenzene	**1.9**	1.0	"	"	"	"	"	"	
p-Isopropyltoluene	ND	1.0	"	"	"	"	"	"	
Methylene chloride	ND	1.0	"	"	"	"	"	"	
Naphthalene	ND	1.0	"	"	"	"	"	"	
n-Propylbenzene	ND	1.0	"	"	"	"	"	"	
Styrene	ND	1.0	"	"	"	"	"	"	
1,1,2,2-Tetrachloroethane	ND	1.0	"	"	"	"	"	"	
1,1,1,2-Tetrachloroethane	ND	1.0	"	"	"	"	"	"	
Tetrachloroethene	ND	1.0	"	"	"	"	"	"	
1,2,3-Trichlorobenzene	ND	1.0	"	"	"	"	"	"	
1,2,4-Trichlorobenzene	ND	1.0	"	"	"	"	"	"	
1,1,2-Trichloroethane	ND	1.0	"	"	"	"	"	"	
1,1,1-Trichloroethane	ND	1.0	"	"	"	"	"	"	
Trichloroethene	ND	1.0	"	"	"	"	"	"	
Trichlorofluoromethane	ND	1.0	"	"	"	"	"	"	
1,2,3-Trichloropropane	ND	1.0	"	"	"	"	"	"	
1,3,5-Trimethylbenzene	ND	1.0	"	"	"	"	"	"	
1,2,4-Trimethylbenzene	ND	1.0	"	"	"	"	"	"	
Vinyl chloride	ND	1.0	"	"	"	"	"	"	
Benzene	**2.7**	0.50	"	"	"	"	"	"	
Toluene	ND	0.50	"	"	"	"	"	"	
Ethylbenzene	ND	0.50	"	"	"	"	"	"	
m,p-Xylene	ND	1.0	"	"	"	"	"	"	
o-Xylene	ND	0.50	"	"	"	"	"	"	
Tert-amyl methyl ether	ND	2.0	"	"	"	"	"	"	

SunStar Laboratories, Inc.

The results in this report apply to the samples analyzed in accordance with the chain of custody document. This analytical report must be reproduced in its entirety.

Daniel Chavez, Project Manager

SunStar Laboratories, Inc.
PROVIDING QUALITY ANALYTICAL SERVICES NATIONWIDE

25712 Commercentre Drive
Lake Forest, California 92630
949.297.5020 Phone
949.297.5027 Fax

Murex	Project: Cenco	
2640 Walnut Ave. Unit F	Project Number: 1003-001-300	**Reported:**
Tustin CA, 92780	Project Manager: Jeremy Squire	02/10/11 16:43

LL_W1_020411

T110122-01 (Water)

Analyte	Result	Reporting Limit	Units	Dilution	Batch	Prepared	Analyzed	Method	Notes
SunStar Laboratories, Inc.									
Volatile Organic Compounds by EPA Method 8260B									
Tert-butyl alcohol	ND	10	ug/l	1	1020702	02/07/11	02/08/11	EPA 8260B	
Di-isopropyl ether	ND	2.0	"	"	"	"	"	"	
Ethyl tert-butyl ether	ND	2.0	"	"	"	"	"	"	
Methyl tert-butyl ether	ND	1.0	"	"	"	"	"	"	
1,1,2-trichloro-1,2,2-trifluoroethane (CFC 113)	ND	5.0	"	"	"	"	"	"	
Surrogate 4-Bromofluorobenzene		*117 %*	*77.1-110*		"	"	"	"	*S-GC*
Surrogate Dibromofluoromethane		*88.8 %*	*66.3-111*		"	"	"	"	
Surrogate Toluene-d8		*111 %*	*84.7-109*		"	"	"	"	*S-GC*

SunStar Laboratories, Inc.

The results in this report apply to the samples analyzed in accordance with the chain of custody document. This analytical report must be reproduced in its entirety.

Daniel Chavez, Project Manager

SunStar Laboratories, Inc.
Providing Quality Analytical Services Nationwide

25712 Commercentre Drive
Lake Forest, California 92630
949.297.5020 Phone
949.297.5027 Fax

Murex	Project: Cenco	
2640 Walnut Ave. Unit F	Project Number: 1003-001-300	**Reported:**
Tustin CA, 92780	Project Manager: Jeremy Squire	02/10/11 16:43

LL_MW503B_020411

T110122-02 (Water)

Analyte	Result	Reporting Limit	Units	Dilution	Batch	Prepared	Analyzed	Method	Notes
SunStar Laboratories, Inc.									
Purgeable Petroleum Hydrocarbons by EPA 8015C									
C6-C12 (GRO)	**57000**	1200	ug/l	25	1020701	02/07/11	02/09/11	EPA 8015C	
Surrogate 4-Bromofluorobenzene		*106 %*	*72.6-146*		"	"	"	"	
Volatile Organic Compounds by EPA Method 8260B									
Bromobenzene	ND	1.0	ug/l	1	1020702	02/07/11	02/08/11	EPA 8260B	
Bromochloromethane	ND	1.0	"	"	"	"	"	"	
Bromodichloromethane	ND	1.0	"	"	"	"	"	"	
Bromoform	ND	1.0	"	"	"	"	"	"	
Bromomethane	ND	1.0	"	"	"	"	"	"	
n-Butylbenzene	**1900**	500	"	500	"	"	02/08/11	"	
sec-Butylbenzene	**8.0**	1.0	"	1	"	"	02/08/11	"	
tert-Butylbenzene	ND	1.0	"	"	"	"	"	"	
Carbon tetrachloride	ND	0.50	"	"	"	"	"	"	
Chlorobenzene	ND	1.0	"	"	"	"	"	"	
Chloroethane	ND	1.0	"	"	"	"	"	"	
Chloroform	ND	1.0	"	"	"	"	"	"	
Chloromethane	ND	1.0	"	"	"	"	"	"	
2-Chlorotoluene	ND	1.0	"	"	"	"	"	"	
4-Chlorotoluene	ND	1.0	"	"	"	"	"	"	
Dibromochloromethane	ND	1.0	"	"	"	"	"	"	
1,2-Dibromo-3-chloropropane	ND	1.0	"	"	"	"	02/08/11	"	
1,2-Dibromoethane (EDB)	ND	1.0	"	"	"	"	02/08/11	"	
Dibromomethane	ND	1.0	"	"	"	"	"	"	
1,2-Dichlorobenzene	ND	1.0	"	"	"	"	"	"	
1,3-Dichlorobenzene	ND	1.0	"	"	"	"	"	"	
1,4-Dichlorobenzene	ND	1.0	"	"	"	"	"	"	
Dichlorodifluoromethane	ND	0.50	"	"	"	"	"	"	
1,1-Dichloroethane	ND	1.0	"	"	"	"	"	"	
1,2-Dichloroethane	**4.8**	0.50	"	"	"	"	"	"	
1,1-Dichloroethene	ND	1.0	"	"	"	"	"	"	
cis-1,2-Dichloroethene	**2.7**	1.0	"	"	"	"	"	"	
trans-1,2-Dichloroethene	ND	1.0	"	"	"	"	"	"	
1,2-Dichloropropane	ND	1.0	"	"	"	"	"	"	

SunStar Laboratories, Inc.

The results in this report apply to the samples analyzed in accordance with the chain of custody document. This analytical report must be reproduced in its entirety.

Daniel Chavez, Project Manager

SunStar Laboratories, Inc.
Providing Quality Analytical Services Nationwide

25712 Commercentre Drive
Lake Forest, California 92630
949.297.5020 Phone
949.297.5027 Fax

Murex	Project: Cenco	
2640 Walnut Ave. Unit F	Project Number: 1003-001-300	**Reported:**
Tustin CA, 92780	Project Manager: Jeremy Squire	02/10/11 16:43

LL_MW503B_020411

T110122-02 (Water)

Analyte	Result	Reporting Limit	Units	Dilution	Batch	Prepared	Analyzed	Method	Notes
SunStar Laboratories, Inc.									
Volatile Organic Compounds by EPA Method 8260B									
1,3-Dichloropropane	ND	1.0	ug/l	1	1020702	02/07/11	02/08/11	EPA 8260B	
2,2-Dichloropropane	ND	1.0	"	"	"	"	"	"	
1,1-Dichloropropene	ND	1.0	"	"	"	"	"	"	
cis-1,3-Dichloropropene	ND	0.50	"	"	"	"	"	"	
trans-1,3-Dichloropropene	ND	0.50	"	"	"	"	"	"	
Hexachlorobutadiene	ND	1.0	"	"	"	"	"	"	
Isopropylbenzene	**22**	1.0	"	"	"	"	"	"	
p-Isopropyltoluene	**28**	1.0	"	"	"	"	"	"	
Methylene chloride	ND	1.0	"	"	"	"	"	"	
Naphthalene	**5200**	500	"	500	"	"	02/08/11	"	
n-Propylbenzene	**78**	1.0	"	1	"	"	02/08/11	"	
Styrene	ND	1.0	"	"	"	"	"	"	
1,1,2,2-Tetrachloroethane	ND	1.0	"	"	"	"	"	"	
1,1,1,2-Tetrachloroethane	ND	1.0	"	"	"	"	"	"	
Tetrachloroethene	ND	1.0	"	"	"	"	"	"	
1,2,3-Trichlorobenzene	ND	1.0	"	"	"	"	"	"	
1,2,4-Trichlorobenzene	ND	1.0	"	"	"	"	"	"	
1,1,2-Trichloroethane	ND	1.0	"	"	"	"	"	"	
1,1,1-Trichloroethane	ND	1.0	"	"	"	"	"	"	
Trichloroethene	ND	1.0	"	"	"	"	"	"	
Trichlorofluoromethane	ND	1.0	"	"	"	"	"	"	
1,2,3-Trichloropropane	ND	1.0	"	"	"	"	"	"	
1,3,5-Trimethylbenzene	**4400**	500	"	500	"	"	02/08/11	"	
1,2,4-Trimethylbenzene	**15000**	500	"	"	"	"	"	"	
Vinyl chloride	ND	1.0	"	1	"	"	02/08/11	"	
Benzene	**1400**	250	"	500	"	"	02/08/11	"	
Toluene	**7700**	250	"	"	"	"	"	"	
Ethylbenzene	**2900**	250	"	"	"	"	"	"	
m,p-Xylene	**15000**	500	"	"	"	"	"	"	
o-Xylene	**5900**	250	"	"	"	"	"	"	
Tert-amyl methyl ether	ND	2.0	"	1	"	"	"	"	
Tert-butyl alcohol	ND	10	"	"	"	"	02/08/11	"	
Di-isopropyl ether	ND	2.0	"	"	"	"	"	"	

SunStar Laboratories, Inc.

The results in this report apply to the samples analyzed in accordance with the chain of custody document. This analytical report must be reproduced in its entirety.

Daniel Chavez, Project Manager

SunStar Laboratories, Inc.
Providing Quality Analytical Services Nationwide

25712 Commercentre Drive
Lake Forest, California 92630
949.297.5020 Phone
949.297.5027 Fax

Murex	Project: Cenco	
2640 Walnut Ave. Unit F	Project Number: 1003-001-300	**Reported:**
Tustin CA, 92780	Project Manager: Jeremy Squire	02/10/11 16:43

LL_MW503B_020411

T110122-02 (Water)

Analyte	Result	Reporting Limit	Units	Dilution	Batch	Prepared	Analyzed	Method	Notes
SunStar Laboratories, Inc.									
Volatile Organic Compounds by EPA Method 8260B									
Ethyl tert-butyl ether	ND	2.0	ug/l	1	1020702	02/07/11	02/08/11	EPA 8260B	
Methyl tert-butyl ether	ND	1.0	"	"	"	"	"	"	
1,1,2-trichloro-1,2,2-trifluoroethane (CFC 113)	ND	5.0	"	"	"	"	"	"	
Surrogate 4-Bromofluorobenzene		*175 %*	*77.1-110*		"	"	"	"	*S-GC*
Surrogate Dibromofluoromethane		*84.1 %*	*66.3-111*		"	"	"	"	
Surrogate Toluene-d8		*102 %*	*84.7-109*		"	"	"	"	

SunStar Laboratories, Inc.

The results in this report apply to the samples analyzed in accordance with the chain of custody document. This analytical report must be reproduced in its entirety.

Daniel Chavez, Project Manager

SunStar Laboratories, Inc.
Providing Quality Analytical Services Nationwide

25712 Commercentre Drive
Lake Forest, California 92630
949.297.5020 Phone
949.297.5027 Fax

Murex	Project: Cenco	
2640 Walnut Ave. Unit F	Project Number: 1003-001-300	**Reported:**
Tustin CA, 92780	Project Manager: Jeremy Squire	02/10/11 16:43

LL_W11_020411

T110122-03 (Water)

Analyte	Result	Reporting Limit	Units	Dilution	Batch	Prepared	Analyzed	Method	Notes
SunStar Laboratories, Inc.									
Purgeable Petroleum Hydrocarbons by EPA 8015C									
C6-C12 (GRO)	**10000**	50	ug/l	1	1020701	02/07/11	02/09/11	EPA 8015C	
Surrogate 4-Bromofluorobenzene		*178 %*	*72.6-146*		"	"	"	"	*S-GRO*
Volatile Organic Compounds by EPA Method 8260B									
Bromobenzene	ND	1.0	ug/l	1	1020702	02/07/11	02/08/11	EPA 8260B	
Bromochloromethane	ND	1.0	"	"	"	"	"	"	
Bromodichloromethane	ND	1.0	"	"	"	"	"	"	
Bromoform	ND	1.0	"	"	"	"	"	"	
Bromomethane	ND	1.0	"	"	"	"	"	"	
n-Butylbenzene	ND	1.0	"	"	"	"	"	"	
sec-Butylbenzene	**3.8**	1.0	"	"	"	"	"	"	
tert-Butylbenzene	**1.3**	1.0	"	"	"	"	"	"	
Carbon tetrachloride	ND	0.50	"	"	"	"	"	"	
Chlorobenzene	ND	1.0	"	"	"	"	"	"	
Chloroethane	ND	1.0	"	"	"	"	"	"	
Chloroform	ND	1.0	"	"	"	"	"	"	
Chloromethane	ND	1.0	"	"	"	"	"	"	
2-Chlorotoluene	ND	1.0	"	"	"	"	"	"	
4-Chlorotoluene	ND	1.0	"	"	"	"	"	"	
Dibromochloromethane	ND	1.0	"	"	"	"	"	"	
1,2-Dibromo-3-chloropropane	ND	1.0	"	"	"	"	"	"	
1,2-Dibromoethane (EDB)	ND	1.0	"	"	"	"	"	"	
Dibromomethane	ND	1.0	"	"	"	"	"	"	
1,2-Dichlorobenzene	ND	1.0	"	"	"	"	"	"	
1,3-Dichlorobenzene	ND	1.0	"	"	"	"	"	"	
1,4-Dichlorobenzene	ND	1.0	"	"	"	"	"	"	
Dichlorodifluoromethane	ND	0.50	"	"	"	"	"	"	
1,1-Dichloroethane	ND	1.0	"	"	"	"	"	"	
1,2-Dichloroethane	ND	0.50	"	"	"	"	"	"	
1,1-Dichloroethene	ND	1.0	"	"	"	"	"	"	
cis-1,2-Dichloroethene	ND	1.0	"	"	"	"	"	"	
trans-1,2-Dichloroethene	ND	1.0	"	"	"	"	"	"	
1,2-Dichloropropane	ND	1.0	"	"	"	"	"	"	

SunStar Laboratories, Inc.

The results in this report apply to the samples analyzed in accordance with the chain of custody document. This analytical report must be reproduced in its entirety.

Daniel Chavez, Project Manager

SunStar Laboratories, Inc.
Providing Quality Analytical Services Nationwide

25712 Commercentre Drive
Lake Forest, California 92630
949.297.5020 Phone
949.297.5027 Fax

Murex	Project: Cenco	
2640 Walnut Ave. Unit F	Project Number: 1003-001-300	**Reported:**
Tustin CA, 92780	Project Manager: Jeremy Squire	02/10/11 16:43

LL_W11_020411

T110122-03 (Water)

SunStar Laboratories, Inc.

Volatile Organic Compounds by EPA Method 8260B

Analyte	Result	Reporting Limit	Units	Dilution	Batch	Prepared	Analyzed	Method	Notes
1,3-Dichloropropane	ND	1.0	ug/l	1	1020702	02/07/11	02/08/11	EPA 8260B	
2,2-Dichloropropane	ND	1.0	"	"	"	"	"	"	
1,1-Dichloropropene	ND	1.0	"	"	"	"	"	"	
cis-1,3-Dichloropropene	ND	0.50	"	"	"	"	"	"	
trans-1,3-Dichloropropene	ND	0.50	"	"	"	"	"	"	
Hexachlorobutadiene	ND	1.0	"	"	"	"	"	"	
Isopropylbenzene	**10**	1.0	"	"	"	"	"	"	
p-Isopropyltoluene	**8.1**	1.0	"	"	"	"	"	"	
Methylene chloride	ND	1.0	"	"	"	"	"	"	
Naphthalene	**7.6**	1.0	"	"	"	"	"	"	
n-Propylbenzene	**9.5**	1.0	"	"	"	"	"	"	
Styrene	ND	1.0	"	"	"	"	"	"	
1,1,2,2-Tetrachloroethane	ND	1.0	"	"	"	"	"	"	
1,1,1,2-Tetrachloroethane	ND	1.0	"	"	"	"	"	"	
Tetrachloroethene	ND	1.0	"	"	"	"	"	"	
1,2,3-Trichlorobenzene	ND	1.0	"	"	"	"	"	"	
1,2,4-Trichlorobenzene	ND	1.0	"	"	"	"	"	"	
1,1,2-Trichloroethane	ND	1.0	"	"	"	"	"	"	
1,1,1-Trichloroethane	ND	1.0	"	"	"	"	"	"	
Trichloroethene	ND	1.0	"	"	"	"	"	"	
Trichlorofluoromethane	ND	1.0	"	"	"	"	"	"	
1,2,3-Trichloropropane	ND	1.0	"	"	"	"	"	"	
1,3,5-Trimethylbenzene	**180**	25	"	25	"	"	02/09/11	"	
1,2,4-Trimethylbenzene	**100**	1.0	"	1	"	"	02/08/11	"	
Vinyl chloride	ND	1.0	"	"	"	"	"	"	
Benzene	**100**	0.50	"	"	"	"	"	"	
Toluene	**1.2**	0.50	"	"	"	"	"	"	
Ethylbenzene	**23**	0.50	"	"	"	"	"	"	
m,p-Xylene	**100**	1.0	"	"	"	"	"	"	
o-Xylene	**16**	0.50	"	"	"	"	"	"	
Tert-amyl methyl ether	ND	2.0	"	"	"	"	"	"	
Tert-butyl alcohol	ND	10	"	"	"	"	"	"	
Di-isopropyl ether	ND	2.0	"	"	"	"	"	"	

SunStar Laboratories, Inc.

The results in this report apply to the samples analyzed in accordance with the chain of custody document. This analytical report must be reproduced in its entirety.

Daniel Chavez, Project Manager

SunStar Laboratories, Inc.
PROVIDING QUALITY ANALYTICAL SERVICES NATIONWIDE

25712 Commercentre Drive
Lake Forest, California 92630
949.297.5020 Phone
949.297.5027 Fax

Murex	Project: Cenco	
2640 Walnut Ave. Unit F	Project Number: 1003-001-300	**Reported:**
Tustin CA, 92780	Project Manager: Jeremy Squire	02/10/11 16:43

LL_W11_020411

T110122-03 (Water)

Analyte	Result	Reporting Limit	Units	Dilution	Batch	Prepared	Analyzed	Method	Notes
SunStar Laboratories, Inc.									
Volatile Organic Compounds by EPA Method 8260B									
Ethyl tert-butyl ether	ND	2.0	ug/l	1	1020702	02/07/11	02/08/11	EPA 8260B	
Methyl tert-butyl ether	ND	1.0	"	"	"	"	"	"	
1,1,2-trichloro-1,2,2-trifluoroethane (CFC 113)	ND	5.0	"	"	"	"	"	"	
Surrogate 4-Bromofluorobenzene		*389 %*	*77.1-110*		"	"	"	"	*S-GC*
Surrogate Dibromofluoromethane		*79.5 %*	*66.3-111*		"	"	"	"	
Surrogate Toluene-d8		*122 %*	*84.7-109*		"	"	"	"	*S-GC*

SunStar Laboratories, Inc.

The results in this report apply to the samples analyzed in accordance with the chain of custody document. This analytical report must be reproduced in its entirety.

Daniel Chavez, Project Manager

SunStar Laboratories, Inc.
Providing Quality Analytical Services Nationwide

25712 Commercentre Drive
Lake Forest, California 92630
949.297.5020 Phone
949.297.5027 Fax

Murex	Project: Cenco	
2640 Walnut Ave. Unit F	Project Number: 1003-001-300	**Reported:**
Tustin CA, 92780	Project Manager: Jeremy Squire	02/10/11 16:43

TB_020411

T110122-04 (Water)

Analyte	Result	Reporting Limit	Units	Dilution	Batch	Prepared	Analyzed	Method	Notes
SunStar Laboratories, Inc.									
Volatile Organic Compounds by EPA Method 8260B									
Bromobenzene	ND	1.0	ug/l	1	1020702	02/07/11	02/08/11	EPA 8260B	
Bromochloromethane	ND	1.0	"	"	"	"	"	"	
Bromodichloromethane	ND	1.0	"	"	"	"	"	"	
Bromoform	ND	1.0	"	"	"	"	"	"	
Bromomethane	ND	1.0	"	"	"	"	"	"	
n-Butylbenzene	ND	1.0	"	"	"	"	"	"	
sec-Butylbenzene	ND	1.0	"	"	"	"	"	"	
tert-Butylbenzene	ND	1.0	"	"	"	"	"	"	
Carbon tetrachloride	ND	0.50	"	"	"	"	"	"	
Chlorobenzene	ND	1.0	"	"	"	"	"	"	
Chloroethane	ND	1.0	"	"	"	"	"	"	
Chloroform	ND	1.0	"	"	"	"	"	"	
Chloromethane	ND	1.0	"	"	"	"	"	"	
2-Chlorotoluene	ND	1.0	"	"	"	"	"	"	
4-Chlorotoluene	ND	1.0	"	"	"	"	"	"	
Dibromochloromethane	ND	1.0	"	"	"	"	"	"	
1,2-Dibromo-3-chloropropane	ND	1.0	"	"	"	"	"	"	
1,2-Dibromoethane (EDB)	ND	1.0	"	"	"	"	"	"	
Dibromomethane	ND	1.0	"	"	"	"	"	"	
1,2-Dichlorobenzene	ND	1.0	"	"	"	"	"	"	
1,3-Dichlorobenzene	ND	1.0	"	"	"	"	"	"	
1,4-Dichlorobenzene	ND	1.0	"	"	"	"	"	"	
Dichlorodifluoromethane	ND	0.50	"	"	"	"	"	"	
1,1-Dichloroethane	ND	1.0	"	"	"	"	"	"	
1,2-Dichloroethane	ND	0.50	"	"	"	"	"	"	
1,1-Dichloroethene	ND	1.0	"	"	"	"	"	"	
cis-1,2-Dichloroethene	ND	1.0	"	"	"	"	"	"	
trans-1,2-Dichloroethene	ND	1.0	"	"	"	"	"	"	
1,2-Dichloropropane	ND	1.0	"	"	"	"	"	"	
1,3-Dichloropropane	ND	1.0	"	"	"	"	"	"	
2,2-Dichloropropane	ND	1.0	"	"	"	"	"	"	
1,1-Dichloropropene	ND	1.0	"	"	"	"	"	"	

SunStar Laboratories, Inc.

The results in this report apply to the samples analyzed in accordance with the chain of custody document. This analytical report must be reproduced in its entirety.

Daniel Chavez, Project Manager

SunStar Laboratories, Inc.
Providing Quality Analytical Services Nationwide

25712 Commercentre Drive
Lake Forest, California 92630
949.297.5020 Phone
949.297.5027 Fax

Murex	Project: Cenco	
2640 Walnut Ave. Unit F	Project Number: 1003-001-300	**Reported:**
Tustin CA, 92780	Project Manager: Jeremy Squire	02/10/11 16:43

TB_020411

T110122-04 (Water)

Analyte	Result	Reporting Limit	Units	Dilution	Batch	Prepared	Analyzed	Method	Notes
SunStar Laboratories, Inc.									
Volatile Organic Compounds by EPA Method 8260B									
cis-1,3-Dichloropropene	ND	0.50	ug/l	1	1020702	02/07/11	02/08/11	EPA 8260B	
trans-1,3-Dichloropropene	ND	0.50	"	"	"	"	"	"	
Hexachlorobutadiene	ND	1.0	"	"	"	"	"	"	
Isopropylbenzene	ND	1.0	"	"	"	"	"	"	
p-Isopropyltoluene	ND	1.0	"	"	"	"	"	"	
Methylene chloride	ND	1.0	"	"	"	"	"	"	
Naphthalene	ND	1.0	"	"	"	"	"	"	
n-Propylbenzene	ND	1.0	"	"	"	"	"	"	
Styrene	ND	1.0	"	"	"	"	"	"	
1,1,2,2-Tetrachloroethane	ND	1.0	"	"	"	"	"	"	
1,1,1,2-Tetrachloroethane	ND	1.0	"	"	"	"	"	"	
Tetrachloroethene	ND	1.0	"	"	"	"	"	"	
1,2,3-Trichlorobenzene	ND	1.0	"	"	"	"	"	"	
1,2,4-Trichlorobenzene	ND	1.0	"	"	"	"	"	"	
1,1,2-Trichloroethane	ND	1.0	"	"	"	"	"	"	
1,1,1-Trichloroethane	ND	1.0	"	"	"	"	"	"	
Trichloroethene	ND	1.0	"	"	"	"	"	"	
Trichlorofluoromethane	ND	1.0	"	"	"	"	"	"	
1,2,3-Trichloropropane	ND	1.0	"	"	"	"	"	"	
1,3,5-Trimethylbenzene	ND	1.0	"	"	"	"	"	"	
1,2,4-Trimethylbenzene	ND	1.0	"	"	"	"	"	"	
Vinyl chloride	ND	1.0	"	"	"	"	"	"	
Benzene	ND	0.50	"	"	"	"	"	"	
Toluene	ND	0.50	"	"	"	"	"	"	
Ethylbenzene	ND	0.50	"	"	"	"	"	"	
m,p-Xylene	ND	1.0	"	"	"	"	"	"	
o-Xylene	ND	0.50	"	"	"	"	"	"	
Tert-amyl methyl ether	ND	2.0	"	"	"	"	"	"	
Tert-butyl alcohol	ND	10	"	"	"	"	"	"	
Di-isopropyl ether	ND	2.0	"	"	"	"	"	"	
Ethyl tert-butyl ether	ND	2.0	"	"	"	"	"	"	
Methyl tert-butyl ether	ND	1.0	"	"	"	"	"	"	

SunStar Laboratories, Inc.

The results in this report apply to the samples analyzed in accordance with the chain of custody document. This analytical report must be reproduced in its entirety.

Daniel Chavez, Project Manager

SunStar Laboratories, Inc.
PROVIDING QUALITY ANALYTICAL SERVICES NATIONWIDE

25712 Commercentre Drive
Lake Forest, California 92630
949.297.5020 Phone
949.297.5027 Fax

Murex	Project: Cenco	
2640 Walnut Ave. Unit F	Project Number: 1003-001-300	**Reported:**
Tustin CA, 92780	Project Manager: Jeremy Squire	02/10/11 16:43

TB_020411

T110122-04 (Water)

Analyte	Result	Reporting Limit	Units	Dilution	Batch	Prepared	Analyzed	Method	Notes
SunStar Laboratories, Inc.									
Volatile Organic Compounds by EPA Method 8260B									
1,1,2-trichloro-1,2,2-trifluoroethane (CFC 113)	ND	5.0	ug/l	1	1020702	02/07/11	02/08/11	EPA 8260B	
Surrogate 4-Bromofluorobenzene		*94.6 %*	*77.1-110*		"	"	"	"	
Surrogate Dibromofluoromethane		*78.5 %*	*66.3-111*		"	"	"	"	
Surrogate Toluene-d8		*98.9 %*	*84.7-109*		"	"	"	"	

SunStar Laboratories, Inc.

The results in this report apply to the samples analyzed in accordance with the chain of custody document. This analytical report must be reproduced in its entirety.

Daniel Chavez, Project Manager

SunStar Laboratories, Inc.
PROVIDING QUALITY ANALYTICAL SERVICES NATIONWIDE

25712 Commercentre Drive
Lake Forest, California 92630
949.297.5020 Phone
949.297.5027 Fax

Murex	Project: Cenco	
2640 Walnut Ave. Unit F	Project Number: 1003-001-300	**Reported:**
Tustin CA, 92780	Project Manager: Jeremy Squire	02/10/11 16:43

Purgeable Petroleum Hydrocarbons by EPA 8015C - Quality Control

SunStar Laboratories, Inc.

Analyte	Result	Reporting Limit	Units	Spike Level	Source Result	%REC	%REC Limits	RPD	RPD Limit	Notes
Batch 1020701 - EPA 5030 GC										
Blank (1020701-BLK1)				Prepared: 02/07/11	Analyzed: 02/09/11					
C6-C12 (GRO)	ND	50	ug/l							
Surrogate 4-Bromofluorobenzene	*197*		*"*	*200*		*98.3*	*72.6-146*			
LCS (1020701-BS1)				Prepared: 02/07/11	Analyzed: 02/09/11					
C6-C12 (GRO)	5140	50	ug/l	5500		93.5	75-125			
Surrogate 4-Bromofluorobenzene	*209*		*"*	*200*		*104*	*72.6-146*			
LCS Dup (1020701-BSD1)				Prepared: 02/07/11	Analyzed: 02/09/11					
C6-C12 (GRO)	5110	50	ug/l	5500		93.0	75-125	0.523	20	
Surrogate 4-Bromofluorobenzene	*197*		*"*	*200*		*98.3*	*72.6-146*			

SunStar Laboratories, Inc.

The results in this report apply to the samples analyzed in accordance with the chain of custody document. This analytical report must be reproduced in its entirety.

Daniel Chavez, Project Manager

SunStar Laboratories, Inc.
Providing Quality Analytical Services Nationwide

25712 Commercentre Drive
Lake Forest, California 92630
949.297.5020 Phone
949.297.5027 Fax

Murex	Project: Cenco	
2640 Walnut Ave. Unit F	Project Number: 1003-001-300	**Reported:**
Tustin CA, 92780	Project Manager: Jeremy Squire	02/10/11 16:43

Volatile Organic Compounds by EPA Method 8260B - Quality Control

SunStar Laboratories, Inc.

Analyte	Result	Reporting Limit	Units	Spike Level	Source Result	%REC	%REC Limits	RPD	RPD Limit	Notes
Batch 1020702 - EPA 5030 GCMS										
Blank (1020702-BLK1)				Prepared & Analyzed: 02/07/11						
Bromobenzene	ND	1.0	ug/l							
Bromochloromethane	ND	1.0	"							
Bromodichloromethane	ND	1.0	"							
Bromoform	ND	1.0	"							
Bromomethane	ND	1.0	"							
n-Butylbenzene	ND	1.0	"							
sec-Butylbenzene	ND	1.0	"							
tert-Butylbenzene	ND	1.0	"							
Carbon tetrachloride	ND	0.50	"							
Chlorobenzene	ND	1.0	"							
Chloroethane	ND	1.0	"							
Chloroform	ND	1.0	"							
Chloromethane	ND	1.0	"							
2-Chlorotoluene	ND	1.0	"							
4-Chlorotoluene	ND	1.0	"							
Dibromochloromethane	ND	1.0	"							
1,2-Dibromo-3-chloropropane	ND	1.0	"							
1,2-Dibromoethane (EDB)	ND	1.0	"							
Dibromomethane	ND	1.0	"							
1,2-Dichlorobenzene	ND	1.0	"							
1,3-Dichlorobenzene	ND	1.0	"							
1,4-Dichlorobenzene	ND	1.0	"							
Dichlorodifluoromethane	ND	0.50	"							
1,1-Dichloroethane	ND	1.0	"							
1,2-Dichloroethane	ND	0.50	"							
1,1-Dichloroethene	ND	1.0	"							
cis-1,2-Dichloroethene	ND	1.0	"							
trans-1,2-Dichloroethene	ND	1.0	"							
1,2-Dichloropropane	ND	1.0	"							
1,3-Dichloropropane	ND	1.0	"							
2,2-Dichloropropane	ND	1.0	"							
1,1-Dichloropropene	ND	1.0	"							
cis-1,3-Dichloropropene	ND	0.50	"							
trans-1,3-Dichloropropene	ND	0.50	"							
Hexachlorobutadiene	ND	1.0	"							
Isopropylbenzene	ND	1.0	"							

SunStar Laboratories, Inc.

The results in this report apply to the samples analyzed in accordance with the chain of custody document. This analytical report must be reproduced in its entirety.

Daniel Chavez, Project Manager

SunStar Laboratories, Inc.
Providing Quality Analytical Services Nationwide

25712 Commercentre Drive
Lake Forest, California 92630
949.297.5020 Phone
949.297.5027 Fax

Murex	Project: Cenco	
2640 Walnut Ave. Unit F	Project Number: 1003-001-300	**Reported:**
Tustin CA, 92780	Project Manager: Jeremy Squire	02/10/11 16:43

Volatile Organic Compounds by EPA Method 8260B - Quality Control

SunStar Laboratories, Inc.

Analyte	Result	Reporting Limit	Units	Spike Level	Source Result	%REC	%REC Limits	RPD	RPD Limit	Notes
Batch 1020702 - EPA 5030 GCMS										
Blank (1020702-BLK1)				Prepared & Analyzed: 02/07/11						
p-Isopropyltoluene	ND	1.0	ug/l							
Methylene chloride	ND	1.0	"							
Naphthalene	ND	1.0	"							
n-Propylbenzene	ND	1.0	"							
Styrene	ND	1.0	"							
1,1,2,2-Tetrachloroethane	ND	1.0	"							
1,1,1,2-Tetrachloroethane	ND	1.0	"							
Tetrachloroethene	ND	1.0	"							
1,2,3-Trichlorobenzene	ND	1.0	"							
1,2,4-Trichlorobenzene	ND	1.0	"							
1,1,2-Trichloroethane	ND	1.0	"							
1,1,1-Trichloroethane	ND	1.0	"							
Trichloroethene	ND	1.0	"							
Trichlorofluoromethane	ND	1.0	"							
1,2,3-Trichloropropane	ND	1.0	"							
1,3,5-Trimethylbenzene	ND	1.0	"							
1,2,4-Trimethylbenzene	ND	1.0	"							
Vinyl chloride	ND	1.0	"							
Benzene	ND	0.50	"							
Toluene	ND	0.50	"							
Ethylbenzene	ND	0.50	"							
m,p-Xylene	ND	1.0	"							
o-Xylene	ND	0.50	"							
Tert-amyl methyl ether	ND	2.0	"							
Tert-butyl alcohol	ND	10	"							
Di-isopropyl ether	ND	2.0	"							
Ethyl tert-butyl ether	ND	2.0	"							
Methyl tert-butyl ether	ND	1.0	"							
1,1,2-trichloro-1,2,2-trifluoroethane (CFC 113)	ND	5.0	"							
Surrogate 4-Bromofluorobenzene	*7.65*		*"*	*8.00*		*95.6*	*77.1-110*			
Surrogate Dibromofluoromethane	*6.55*		*"*	*8.00*		*81.9*	*66.3-111*			
Surrogate Toluene-d8	*8.03*		*"*	*8.00*		*100*	*84.7-109*			

SunStar Laboratories, Inc.

The results in this report apply to the samples analyzed in accordance with the chain of custody document. This analytical report must be reproduced in its entirety.

Daniel Chavez, Project Manager

SunStar Laboratories, Inc.
Providing Quality Analytical Services Nationwide

25712 Commercentre Drive
Lake Forest, California 92630
949.297.5020 Phone
949.297.5027 Fax

Murex	Project: Cenco	
2640 Walnut Ave. Unit F	Project Number: 1003-001-300	**Reported:**
Tustin CA, 92780	Project Manager: Jeremy Squire	02/10/11 16:43

Volatile Organic Compounds by EPA Method 8260B - Quality Control

SunStar Laboratories, Inc.

Analyte	Result	Reporting Limit	Units	Spike Level	Source Result	%REC	%REC Limits	RPD	RPD Limit	Notes
Batch 1020702 - EPA 5030 GCMS										
LCS (1020702-BS1)				Prepared & Analyzed: 02/07/11						
Chlorobenzene	22.0	1.0	ug/l	20.0		110	75-125			
1,1-Dichloroethene	20.0	1.0	"	20.0		99.8	75-125			
Trichloroethene	20 9	1.0	"	20.0		104	75-125			
Benzene	19 5	0.50	"	20.0		97.6	75-125			
Toluene	19.4	0.50	"	20.0		97.2	75-125			
Surrogate 4-Bromofluorobenzene	*8.64*		*"*	*8.00*		*108*	*77.1-110*			
Surrogate Dibromofluoromethane	*6.41*		*"*	*8.00*		*80.1*	*66.3-111*			
Surrogate Toluene-d8	*7.59*		*"*	*8.00*		*94.9*	*84.7-109*			
LCS Dup (1020702-BSD1)				Prepared & Analyzed: 02/07/11						
Chlorobenzene	21 3	1.0	ug/l	20.0		107	75-125	3.00	20	
1,1-Dichloroethene	22 2	1.0	"	20.0		111	75-125	10.6	20	
Trichloroethene	20.8	1.0	"	20.0		104	75-125	0.384	20	
Benzene	19 3	0.50	"	20.0		96.6	75-125	0.979	20	
Toluene	20 1	0.50	"	20.0		101	75-125	3.44	20	
Surrogate 4-Bromofluorobenzene	*8.65*		*"*	*8.00*		*108*	*77.1-110*			
Surrogate Dibromofluoromethane	*6.84*		*"*	*8.00*		*85.5*	*66.3-111*			
Surrogate Toluene-d8	*7.99*		*"*	*8.00*		*99.9*	*84.7-109*			

SunStar Laboratories, Inc.

The results in this report apply to the samples analyzed in accordance with the chain of custody document. This analytical report must be reproduced in its entirety.

Daniel Chavez, Project Manager

SunStar Laboratories, Inc.
PROVIDING QUALITY ANALYTICAL SERVICES NATIONWIDE

25712 Commercentre Drive
Lake Forest, California 92630
949.297.5020 Phone
949.297.5027 Fax

Murex	Project: Cenco	
2640 Walnut Ave. Unit F	Project Number: 1003-001-300	**Reported:**
Tustin CA, 92780	Project Manager: Jeremy Squire	02/10/11 16:43

Notes and Definitions

S-GRO	Surrogate recovery high due to co-elution with gasoline range organics. Surrogate recovery for associated blank is within acceptance limits.
S-GC	Surrogate recovery outside of established control limits. The data was accepted based on valid recovery of the remaining surrogate(s).
DET	Analyte DETECTED
ND	Analyte NOT DETECTED at or above the reporting limit
NR	Not Reported
dry	Sample results reported on a dry weight basis
RPD	Relative Percent Difference

SunStar Laboratories, Inc.

Daniel J Chávez

Daniel Chavez, Project Manager

The results in this report apply to the samples analyzed in accordance with the chain of custody document. This analytical report must be reproduced in its entirety.

SunStar Laboratories, Inc.
25712 Commercentre Dr
Lake Forest, CA 92630
949-297-5020

Chain of Custody Record

Client: Murex Environmental, Inc.
Address: 2640 Walnut Ave, Unit F
Phone: (714) 508-0800 Fax: (714) 508-0880
Project Manager: Jeremy Squire (714) 604-5836

Date: 2·4·2011 Page: 1 Of 1
Project Name: CENCO
Collector: F. Sosic Client Project #: 1003-001-300
Batch #: T110122 EDF #:

Sample ID	Date Sampled	Time	Sample Type	8260 (VOCs NO OXY)	8260 + OXY	1,4-Dioxane	8270 Semi-Volatiles (PAHs, etc)	8021 BTEX	8015M (TPH gasoline)	8015M (TPH diesel)	Hexavalent Chromium (7199)	6010/7000 Title 22 Metals	PCBs				Total # of containers	Comments/Preservative	Laboratory ID #
LL_W1_020411	2.4.2011	1000	GW		X				X								6		01
LL_HWS03B_020411		1230			X				X								6		02
LL_W11_020411		1600			X				X								6		03
TB_020411			Water		X												2		04

Relinquished by: (signature)	Date / Time	Received by: (signat	Date / Time
2·4·2011	1655		2/4/11 1655
Relinquished by: (signature)	Date / Time	Received by: (signat	Date / Time
Relinquished by: (signature)	Date / Time	Received by: (signat	Date / Time

Total # of containers	20
Chain of Custody seals	N
Seals intact? Y/N/NA	N/A
Received good condition/cold	Y
Turn around time:	

Notes
5.0°

Sample disposal Instructions: Disposal @ $2.00 each ____ Return to client ____ Pickup ____

SunStar Laboratories, Inc.
PROVIDING QUALITY ANALYTICAL SERVICES NATIONWIDE

SAMPLE RECEIVING REVIEW SHEET

BATCH # 110122

Client Name: MUREX

Project: GENCO

Received by: DAN

Date/Time Received: 2/4/11 1655

Delivered by : ☐ Client ☒ SunStar Courier ☐ GSO ☐ FedEx ☐ Other _____

Total number of coolers received 0

Temp criteria = 6°C > 0°C (no frozen containers)

Temperature: cooler #1 5.2 °C +/- the CF (- 0.2°C) = 5.0 °C corrected temperature

cooler #2 _____ °C +/- the CF (- 0.2°C) = _____ °C corrected temperature

cooler #3 _____ °C +/- the CF (- 0.2°C) = _____ °C corrected temperature

Samples outside temp. but received on ice, w/in 6 hours of final sampling.	☒ Yes	☐ No*	☐ N/A
Custody Seals Intact on Cooler/Sample	☐ Yes	☐ No*	☒ N/A
Sample Containers Intact	☒ Yes	☐ No*	
Sample labels match COC ID's	☒ Yes	☐ No*	
Total number of containers received match COC	☒ Yes	☐ No*	
Proper containers received for analyses requested on COC	☒ Yes	☐ No*	
Proper preservative indicated on COC/containers for analyses requested	☒ Yes	☐ No*	☐ N/A

Complete shipment received in good condition with correct temperatures, containers, labels, volumes preservatives and within method specified holding times. ☒ **Yes** ☐ **No***

* Complete Non-Conformance Receiving Sheet if checked

Cooler/Sample Review - Initials and date BC 2/5/11

Comments:

SunStar Laboratories, Inc.
PROVIDING QUALITY ANALYTICAL SERVICES NATIONWIDE

25712 Commercentre Drive
Lake Forest, California 92630
949.297.5020 Phone
949.297.5027 Fax

11 February 2011

Jeremy Squire
Murex
2640 Walnut Ave. Unit F
Tustin, CA 92780

RE: Cenco

Enclosed are the results of analyses for samples received by the laboratory on 02/07/11 17:00. If you have any questions concerning this report, please feel free to contact me.

Sincerely,

Daniel Chavez
Project Manager

SunStar Laboratories, Inc.
PROVIDING QUALITY ANALYTICAL SERVICES NATIONWIDE

25712 Commercentre Drive
Lake Forest, California 92630
949.297.5020 Phone
949.297.5027 Fax

Murex	Project: Cenco	
2640 Walnut Ave. Unit F	Project Number: 1003-001-300	**Reported:**
Tustin CA, 92780	Project Manager: Jeremy Squire	02/11/11 16:19

ANALYTICAL REPORT FOR SAMPLES

Sample ID	Laboratory ID	Matrix	Date Sampled	Date Received
LL_W8_020711	T110129-01	Water	02/07/11 08:30	02/07/11 17:00
LL_W16A_020711	T110129-02	Water	02/07/11 13:00	02/07/11 17:00
LL_W16B_020711	T110129-03	Water	02/07/11 15:00	02/07/11 17:00
LL_W16C_020711	T110129-04	Water	02/07/11 16:00	02/07/11 17:00
TB_020711	T110129-05	Water	02/07/11 00:00	02/07/11 17:00

SunStar Laboratories, Inc.

Daniel J Chávez

Daniel Chavez, Project Manager

The results in this report apply to the samples analyzed in accordance with the chain of custody document. This analytical report must be reproduced in its entirety.

SunStar Laboratories, Inc.
Providing Quality Analytical Services Nationwide

25712 Commercentre Drive
Lake Forest, California 92630
949.297.5020 Phone
949.297.5027 Fax

Murex	Project: Cenco	
2640 Walnut Ave. Unit F	Project Number: 1003-001-300	**Reported:**
Tustin CA, 92780	Project Manager: Jeremy Squire	02/11/11 16:19

LL_W8_020711

T110129-01 (Water)

Analyte	Result	Reporting Limit	Units	Dilution	Batch	Prepared	Analyzed	Method	Notes
SunStar Laboratories, Inc.									
Purgeable Petroleum Hydrocarbons by EPA 8015C									
C6-C12 (GRO)	**130**	50	ug/l	1	1020812	02/08/11	02/09/11	EPA 8015C	
Surrogate 4-Bromofluorobenzene		*110 %*	*72.6-146*		"	"	"	"	
Volatile Organic Compounds by EPA Method 8260B									
Bromobenzene	ND	1.0	ug/l	1	1020811	02/08/11	02/10/11	EPA 8260B	
Bromochloromethane	ND	1.0	"	"	"	"	"	"	
Bromodichloromethane	ND	1.0	"	"	"	"	"	"	
Bromoform	ND	1.0	"	"	"	"	"	"	
Bromomethane	ND	1.0	"	"	"	"	"	"	
n-Butylbenzene	ND	1.0	"	"	"	"	"	"	
sec-Butylbenzene	ND	1.0	"	"	"	"	"	"	
tert-Butylbenzene	ND	1.0	"	"	"	"	"	"	
Carbon tetrachloride	ND	0.50	"	"	"	"	"	"	
Chlorobenzene	ND	1.0	"	"	"	"	"	"	
Chloroethane	ND	1.0	"	"	"	"	"	"	
Chloroform	ND	1.0	"	"	"	"	"	"	
Chloromethane	ND	1.0	"	"	"	"	"	"	
2-Chlorotoluene	ND	1.0	"	"	"	"	"	"	
4-Chlorotoluene	ND	1.0	"	"	"	"	"	"	
Dibromochloromethane	ND	1.0	"	"	"	"	"	"	
1,2-Dibromo-3-chloropropane	ND	1.0	"	"	"	"	"	"	
1,2-Dibromoethane (EDB)	ND	1.0	"	"	"	"	"	"	
Dibromomethane	ND	1.0	"	"	"	"	"	"	
1,2-Dichlorobenzene	ND	1.0	"	"	"	"	"	"	
1,3-Dichlorobenzene	ND	1.0	"	"	"	"	"	"	
1,4-Dichlorobenzene	ND	1.0	"	"	"	"	"	"	
Dichlorodifluoromethane	ND	0.50	"	"	"	"	"	"	
1,1-Dichloroethane	ND	1.0	"	"	"	"	"	"	
1,2-Dichloroethane	ND	0.50	"	"	"	"	"	"	
1,1-Dichloroethene	ND	1.0	"	"	"	"	"	"	
cis-1,2-Dichloroethene	ND	1.0	"	"	"	"	"	"	
trans-1,2-Dichloroethene	ND	1.0	"	"	"	"	"	"	

SunStar Laboratories, Inc.

The results in this report apply to the samples analyzed in accordance with the chain of custody document. This analytical report must be reproduced in its entirety.

Daniel Chavez, Project Manager

SunStar Laboratories, Inc.
Providing Quality Analytical Services Nationwide

25712 Commercentre Drive
Lake Forest, California 92630
949.297.5020 Phone
949.297.5027 Fax

Murex	Project: Cenco	
2640 Walnut Ave. Unit F	Project Number: 1003-001-300	**Reported:**
Tustin CA, 92780	Project Manager: Jeremy Squire	02/11/11 16:19

LL_W8_020711

T110129-01 (Water)

SunStar Laboratories, Inc.

Volatile Organic Compounds by EPA Method 8260B

Analyte	Result	Reporting Limit	Units	Dilution	Batch	Prepared	Analyzed	Method	Notes
1,2-Dichloropropane	ND	1.0	ug/l	1	1020811	02/08/11	02/10/11	EPA 8260B	
1,3-Dichloropropane	ND	1.0	"	"	"	"	"	"	
2,2-Dichloropropane	ND	1.0	"	"	"	"	"	"	
1,1-Dichloropropene	ND	1.0	"	"	"	"	"	"	
cis-1,3-Dichloropropene	ND	0.50	"	"	"	"	"	"	
trans-1,3-Dichloropropene	ND	0.50	"	"	"	"	"	"	
Hexachlorobutadiene	ND	1.0	"	"	"	"	"	"	
Isopropylbenzene	ND	1.0	"	"	"	"	"	"	
p-Isopropyltoluene	ND	1.0	"	"	"	"	"	"	
Methylene chloride	ND	1.0	"	"	"	"	"	"	
Naphthalene	ND	1.0	"	"	"	"	"	"	
n-Propylbenzene	ND	1.0	"	"	"	"	"	"	
Styrene	ND	1.0	"	"	"	"	"	"	
1,1,2,2-Tetrachloroethane	ND	1.0	"	"	"	"	"	"	
1,1,1,2-Tetrachloroethane	ND	1.0	"	"	"	"	"	"	
Tetrachloroethene	ND	1.0	"	"	"	"	"	"	
1,2,3-Trichlorobenzene	ND	1.0	"	"	"	"	"	"	
1,2,4-Trichlorobenzene	ND	1.0	"	"	"	"	"	"	
1,1,2-Trichloroethane	ND	1.0	"	"	"	"	"	"	
1,1,1-Trichloroethane	ND	1.0	"	"	"	"	"	"	
Trichloroethene	ND	1.0	"	"	"	"	"	"	
Trichlorofluoromethane	ND	1.0	"	"	"	"	"	"	
1,2,3-Trichloropropane	ND	1.0	"	"	"	"	"	"	
1,3,5-Trimethylbenzene	ND	1.0	"	"	"	"	"	"	
1,2,4-Trimethylbenzene	ND	1.0	"	"	"	"	"	"	
Vinyl chloride	ND	1.0	"	"	"	"	"	"	
Benzene	ND	0.50	"	"	"	"	"	"	
Toluene	**0.85**	0.50	"	"	"	"	"	"	
Ethylbenzene	ND	0.50	"	"	"	"	"	"	
m,p-Xylene	ND	1.0	"	"	"	"	"	"	
o-Xylene	ND	0.50	"	"	"	"	"	"	
Tert-amyl methyl ether	ND	2.0	"	"	"	"	"	"	

SunStar Laboratories, Inc.

Daniel Chavez, Project Manager

The results in this report apply to the samples analyzed in accordance with the chain of custody document. This analytical report must be reproduced in its entirety.

SunStar Laboratories, Inc.
PROVIDING QUALITY ANALYTICAL SERVICES NATIONWIDE

25712 Commercentre Drive
Lake Forest, California 92630
949.297.5020 Phone
949.297.5027 Fax

Murex	Project: Cenco	
2640 Walnut Ave. Unit F	Project Number: 1003-001-300	**Reported:**
Tustin CA, 92780	Project Manager: Jeremy Squire	02/11/11 16:19

LL_W8_020711

T110129-01 (Water)

Analyte	Result	Reporting Limit	Units	Dilution	Batch	Prepared	Analyzed	Method	Notes
SunStar Laboratories, Inc.									
Volatile Organic Compounds by EPA Method 8260B									
Tert-butyl alcohol	ND	10	ug/l	1	1020811	02/08/11	02/10/11	EPA 8260B	
Di-isopropyl ether	ND	2.0	"	"	"	"	"	"	
Ethyl tert-butyl ether	ND	2.0	"	"	"	"	"	"	
Methyl tert-butyl ether	ND	1.0	"	"	"	"	"	"	
1,1,2-trichloro-1,2,2-trifluoroethane (CFC 113)	ND	5.0	"	"	"	"	"	"	
Surrogate 4-Bromofluorobenzene		*98.0 %*	*77.1-110*		"	"	"	"	
Surrogate Dibromofluoromethane		*80.4 %*	*66.3-111*		"	"	"	"	
Surrogate Toluene-d8		*99.1 %*	*84.7-109*		"	"	"	"	

SunStar Laboratories, Inc.

The results in this report apply to the samples analyzed in accordance with the chain of custody document. This analytical report must be reproduced in its entirety.

Daniel Chavez, Project Manager

SunStar Laboratories, Inc.
Providing Quality Analytical Services Nationwide

25712 Commercentre Drive
Lake Forest, California 92630
949.297.5020 Phone
949.297.5027 Fax

Murex	Project: Cenco	
2640 Walnut Ave. Unit F	Project Number: 1003-001-300	**Reported:**
Tustin CA, 92780	Project Manager: Jeremy Squire	02/11/11 16:19

LL_W16A_020711

T110129-02 (Water)

Analyte	Result	Reporting Limit	Units	Dilution	Batch	Prepared	Analyzed	Method	Notes
SunStar Laboratories, Inc.									
Purgeable Petroleum Hydrocarbons by EPA 8015C									
C6-C12 (GRO)	**320**	50	ug/l	1	1020812	02/08/11	02/09/11	EPA 8015C	
Surrogate 4-Bromofluorobenzene		*110 %*	*72.6-146*		"	"	"	"	
Volatile Organic Compounds by EPA Method 8260B									
Bromobenzene	ND	1.0	ug/l	1	1020811	02/08/11	02/10/11	EPA 8260B	
Bromochloromethane	ND	1.0	"	"	"	"	"	"	
Bromodichloromethane	ND	1.0	"	"	"	"	"	"	
Bromoform	ND	1.0	"	"	"	"	"	"	
Bromomethane	ND	1.0	"	"	"	"	"	"	
n-Butylbenzene	ND	1.0	"	"	"	"	"	"	
sec-Butylbenzene	**1.5**	1.0	"	"	"	"	"	"	
tert-Butylbenzene	ND	1.0	"	"	"	"	"	"	
Carbon tetrachloride	ND	0.50	"	"	"	"	"	"	
Chlorobenzene	ND	1.0	"	"	"	"	"	"	
Chloroethane	**4.8**	1.0	"	"	"	"	"	"	
Chloroform	ND	1.0	"	"	"	"	"	"	
Chloromethane	ND	1.0	"	"	"	"	"	"	
2-Chlorotoluene	ND	1.0	"	"	"	"	"	"	
4-Chlorotoluene	ND	1.0	"	"	"	"	"	"	
Dibromochloromethane	ND	1.0	"	"	"	"	"	"	
1,2-Dibromo-3-chloropropane	ND	1.0	"	"	"	"	"	"	
1,2-Dibromoethane (EDB)	ND	1.0	"	"	"	"	"	"	
Dibromomethane	ND	1.0	"	"	"	"	"	"	
1,2-Dichlorobenzene	ND	1.0	"	"	"	"	"	"	
1,3-Dichlorobenzene	ND	1.0	"	"	"	"	"	"	
1,4-Dichlorobenzene	ND	1.0	"	"	"	"	"	"	
Dichlorodifluoromethane	ND	0.50	"	"	"	"	"	"	
1,1-Dichloroethane	**1.7**	1.0	"	"	"	"	"	"	
1,2-Dichloroethane	ND	0.50	"	"	"	"	"	"	
1,1-Dichloroethene	ND	1.0	"	"	"	"	"	"	
cis-1,2-Dichloroethene	ND	1.0	"	"	"	"	"	"	
trans-1,2-Dichloroethene	ND	1.0	"	"	"	"	"	"	
1,2-Dichloropropane	ND	1.0	"	"	"	"	"	"	

SunStar Laboratories, Inc.

The results in this report apply to the samples analyzed in accordance with the chain of custody document. This analytical report must be reproduced in its entirety.

Daniel Chavez, Project Manager

SunStar Laboratories, Inc.
Providing Quality Analytical Services Nationwide

25712 Commercentre Drive
Lake Forest, California 92630
949.297.5020 Phone
949.297.5027 Fax

Murex	Project: Cenco	
2640 Walnut Ave. Unit F	Project Number: 1003-001-300	**Reported:**
Tustin CA, 92780	Project Manager: Jeremy Squire	02/11/11 16:19

LL_W16A_020711

T110129-02 (Water)

SunStar Laboratories, Inc.

Volatile Organic Compounds by EPA Method 8260B

Analyte	Result	Reporting Limit	Units	Dilution	Batch	Prepared	Analyzed	Method	Notes
1,3-Dichloropropane	ND	1.0	ug/l	1	1020811	02/08/11	02/10/11	EPA 8260B	
2,2-Dichloropropane	ND	1.0	"	"	"	"	"	"	
1,1-Dichloropropene	ND	1.0	"	"	"	"	"	"	
cis-1,3-Dichloropropene	ND	0.50	"	"	"	"	"	"	
trans-1,3-Dichloropropene	ND	0.50	"	"	"	"	"	"	
Hexachlorobutadiene	ND	1.0	"	"	"	"	"	"	
Isopropylbenzene	**5.2**	1.0	"	"	"	"	"	"	
p-Isopropyltoluene	ND	1.0	"	"	"	"	"	"	
Methylene chloride	ND	1.0	"	"	"	"	"	"	
Naphthalene	ND	1.0	"	"	"	"	"	"	
n-Propylbenzene	**1.6**	1.0	"	"	"	"	"	"	
Styrene	ND	1.0	"	"	"	"	"	"	
1,1,2,2-Tetrachloroethane	ND	1.0	"	"	"	"	"	"	
1,1,1,2-Tetrachloroethane	ND	1.0	"	"	"	"	"	"	
Tetrachloroethene	ND	1.0	"	"	"	"	"	"	
1,2,3-Trichlorobenzene	ND	1.0	"	"	"	"	"	"	
1,2,4-Trichlorobenzene	ND	1.0	"	"	"	"	"	"	
1,1,2-Trichloroethane	ND	1.0	"	"	"	"	"	"	
1,1,1-Trichloroethane	ND	1.0	"	"	"	"	"	"	
Trichloroethene	ND	1.0	"	"	"	"	"	"	
Trichlorofluoromethane	ND	1.0	"	"	"	"	"	"	
1,2,3-Trichloropropane	ND	1.0	"	"	"	"	"	"	
1,3,5-Trimethylbenzene	ND	1.0	"	"	"	"	"	"	
1,2,4-Trimethylbenzene	ND	1.0	"	"	"	"	"	"	
Vinyl chloride	**1.1**	1.0	"	"	"	"	"	"	
Benzene	**12**	0.50	"	"	"	"	"	"	
Toluene	ND	0.50	"	"	"	"	"	"	
Ethylbenzene	ND	0.50	"	"	"	"	"	"	
m,p-Xylene	ND	1.0	"	"	"	"	"	"	
o-Xylene	ND	0.50	"	"	"	"	"	"	
Tert-amyl methyl ether	ND	2.0	"	"	"	"	"	"	
Tert-butyl alcohol	ND	10	"	"	"	"	"	"	

SunStar Laboratories, Inc.

The results in this report apply to the samples analyzed in accordance with the chain of custody document. This analytical report must be reproduced in its entirety.

Daniel Chavez, Project Manager

SunStar Laboratories, Inc.
PROVIDING QUALITY ANALYTICAL SERVICES NATIONWIDE

25712 Commercentre Drive
Lake Forest, California 92630
949.297.5020 Phone
949.297.5027 Fax

Murex	Project: Cenco	
2640 Walnut Ave. Unit F	Project Number: 1003-001-300	**Reported:**
Tustin CA, 92780	Project Manager: Jeremy Squire	02/11/11 16:19

LL_W16A_020711

T110129-02 (Water)

Analyte	Result	Reporting Limit	Units	Dilution	Batch	Prepared	Analyzed	Method	Notes
SunStar Laboratories, Inc.									
Volatile Organic Compounds by EPA Method 8260B									
Di-isopropyl ether	ND	2.0	ug/l	1	1020811	02/08/11	02/10/11	EPA 8260B	
Ethyl tert-butyl ether	ND	2.0	"	"	"	"	"	"	
Methyl tert-butyl ether	ND	1.0	"	"	"	"	"	"	
1,1,2-trichloro-1,2,2-trifluoroethane (CFC 113)	ND	5.0	"	"	"	"	"	"	
Surrogate 4-Bromofluorobenzene		*97.6 %*	*77.1-110*		"	"	"	"	
Surrogate Dibromofluoromethane		*108 %*	*66.3-111*		"	"	"	"	
Surrogate Toluene-d8		*95.2 %*	*84.7-109*		"	"	"	"	

SunStar Laboratories, Inc.

The results in this report apply to the samples analyzed in accordance with the chain of custody document. This analytical report must be reproduced in its entirety.

Daniel Chavez, Project Manager

SunStar Laboratories, Inc.
Providing Quality Analytical Services Nationwide

25712 Commercentre Drive
Lake Forest, California 92630
949.297.5020 Phone
949.297.5027 Fax

Murex	Project: Cenco	
2640 Walnut Ave. Unit F	Project Number: 1003-001-300	**Reported:**
Tustin CA, 92780	Project Manager: Jeremy Squire	02/11/11 16:19

LL_W16B_020711

T110129-03 (Water)

Analyte	Result	Reporting Limit	Units	Dilution	Batch	Prepared	Analyzed	Method	Notes
SunStar Laboratories, Inc.									
Purgeable Petroleum Hydrocarbons by EPA 8015C									
C6-C12 (GRO)	**290**	50	ug/l	1	1020812	02/08/11	02/09/11	EPA 8015C	
Surrogate 4-Bromofluorobenzene		*122 %*	*72.6-146*		"	"	"	"	
Volatile Organic Compounds by EPA Method 8260B									
Bromobenzene	ND	1.0	ug/l	1	1020811	02/08/11	02/10/11	EPA 8260B	
Bromochloromethane	ND	1.0	"	"	"	"	"	"	
Bromodichloromethane	ND	1.0	"	"	"	"	"	"	
Bromoform	ND	1.0	"	"	"	"	"	"	
Bromomethane	ND	1.0	"	"	"	"	"	"	
n-Butylbenzene	ND	1.0	"	"	"	"	"	"	
sec-Butylbenzene	ND	1.0	"	"	"	"	"	"	
tert-Butylbenzene	ND	1.0	"	"	"	"	"	"	
Carbon tetrachloride	ND	0.50	"	"	"	"	"	"	
Chlorobenzene	**5.4**	1.0	"	"	"	"	"	"	
Chloroethane	ND	1.0	"	"	"	"	"	"	
Chloroform	ND	1.0	"	"	"	"	"	"	
Chloromethane	**2.4**	1.0	"	"	"	"	"	"	
2-Chlorotoluene	ND	1.0	"	"	"	"	"	"	
4-Chlorotoluene	ND	1.0	"	"	"	"	"	"	
Dibromochloromethane	ND	1.0	"	"	"	"	"	"	
1,2-Dibromo-3-chloropropane	ND	1.0	"	"	"	"	"	"	
1,2-Dibromoethane (EDB)	ND	1.0	"	"	"	"	"	"	
Dibromomethane	ND	1.0	"	"	"	"	"	"	
1,2-Dichlorobenzene	ND	1.0	"	"	"	"	"	"	
1,3-Dichlorobenzene	ND	1.0	"	"	"	"	"	"	
1,4-Dichlorobenzene	ND	1.0	"	"	"	"	"	"	
Dichlorodifluoromethane	ND	0.50	"	"	"	"	"	"	
1,1-Dichloroethane	**8.5**	1.0	"	"	"	"	"	"	
1,2-Dichloroethane	ND	0.50	"	"	"	"	"	"	
1,1-Dichloroethene	**2.0**	1.0	"	"	"	"	"	"	
cis-1,2-Dichloroethene	**70**	1.0	"	"	"	"	"	"	
trans-1,2-Dichloroethene	**50**	1.0	"	"	"	"	"	"	
1,2-Dichloropropane	ND	1.0	"	"	"	"	"	"	

SunStar Laboratories, Inc.

The results in this report apply to the samples analyzed in accordance with the chain of custody document. This analytical report must be reproduced in its entirety.

Daniel Chavez, Project Manager

SunStar Laboratories, Inc.
Providing Quality Analytical Services Nationwide

25712 Commercentre Drive
Lake Forest, California 92630
949.297.5020 Phone
949.297.5027 Fax

Murex	Project: Cenco	
2640 Walnut Ave. Unit F	Project Number: 1003-001-300	**Reported:**
Tustin CA, 92780	Project Manager: Jeremy Squire	02/11/11 16:19

LL_W16B_020711

T110129-03 (Water)

SunStar Laboratories, Inc.

Volatile Organic Compounds by EPA Method 8260B

Analyte	Result	Reporting Limit	Units	Dilution	Batch	Prepared	Analyzed	Method	Notes
1,3-Dichloropropane	ND	1.0	ug/l	1	1020811	02/08/11	02/10/11	EPA 8260B	
2,2-Dichloropropane	ND	1.0	"	"	"	"	"	"	
1,1-Dichloropropene	ND	1.0	"	"	"	"	"	"	
cis-1,3-Dichloropropene	ND	0.50	"	"	"	"	"	"	
trans-1,3-Dichloropropene	ND	0.50	"	"	"	"	"	"	
Hexachlorobutadiene	ND	1.0	"	"	"	"	"	"	
Isopropylbenzene	ND	1.0	"	"	"	"	"	"	
p-Isopropyltoluene	ND	1.0	"	"	"	"	"	"	
Methylene chloride	ND	1.0	"	"	"	"	"	"	
Naphthalene	**18**	1.0	"	"	"	"	"	"	
n-Propylbenzene	ND	1.0	"	"	"	"	"	"	
Styrene	ND	1.0	"	"	"	"	"	"	
1,1,2,2-Tetrachloroethane	ND	1.0	"	"	"	"	"	"	
1,1,1,2-Tetrachloroethane	ND	1.0	"	"	"	"	"	"	
Tetrachloroethene	ND	1.0	"	"	"	"	"	"	
1,2,3-Trichlorobenzene	ND	1.0	"	"	"	"	"	"	
1,2,4-Trichlorobenzene	ND	1.0	"	"	"	"	"	"	
1,1,2-Trichloroethane	ND	1.0	"	"	"	"	"	"	
1,1,1-Trichloroethane	ND	1.0	"	"	"	"	"	"	
Trichloroethene	**3.5**	1.0	"	"	"	"	"	"	
Trichlorofluoromethane	ND	1.0	"	"	"	"	"	"	
1,2,3-Trichloropropane	ND	1.0	"	"	"	"	"	"	
1,3,5-Trimethylbenzene	ND	1.0	"	"	"	"	"	"	
1,2,4-Trimethylbenzene	ND	1.0	"	"	"	"	"	"	
Vinyl chloride	**2.9**	1.0	"	"	"	"	"	"	
Benzene	**80**	0.50	"	"	"	"	"	"	
Toluene	ND	0.50	"	"	"	"	"	"	
Ethylbenzene	ND	0.50	"	"	"	"	"	"	
m,p-Xylene	ND	1.0	"	"	"	"	"	"	
o-Xylene	ND	0.50	"	"	"	"	"	"	
Tert-amyl methyl ether	ND	2.0	"	"	"	"	"	"	
Tert-butyl alcohol	ND	10	"	"	"	"	"	"	

SunStar Laboratories, Inc.

The results in this report apply to the samples analyzed in accordance with the chain of custody document. This analytical report must be reproduced in its entirety.

Daniel Chavez, Project Manager

SunStar Laboratories, Inc.
PROVIDING QUALITY ANALYTICAL SERVICES NATIONWIDE

25712 Commercentre Drive
Lake Forest, California 92630
949.297.5020 Phone
949.297.5027 Fax

Murex	Project: Cenco	
2640 Walnut Ave. Unit F	Project Number: 1003-001-300	**Reported:**
Tustin CA, 92780	Project Manager: Jeremy Squire	02/11/11 16:19

LL_W16B_020711

T110129-03 (Water)

Analyte	Result	Reporting Limit	Units	Dilution	Batch	Prepared	Analyzed	Method	Notes
SunStar Laboratories, Inc.									
Volatile Organic Compounds by EPA Method 8260B									
Di-isopropyl ether	ND	2.0	ug/l	1	1020811	02/08/11	02/10/11	EPA 8260B	
Ethyl tert-butyl ether	ND	2.0	"	"	"	"	"	"	
Methyl tert-butyl ether	ND	1.0	"	"	"	"	"	"	
1,1,2-trichloro-1,2,2-trifluoroethane (CFC 113)	ND	5.0	"	"	"	"	"	"	
Surrogate 4-Bromofluorobenzene		*99.2 %*	*77.1-110*		"	"	"	"	
Surrogate Dibromofluoromethane		*97.2 %*	*66.3-111*		"	"	"	"	
Surrogate Toluene-d8		*95.2 %*	*84.7-109*		"	"	"	"	

SunStar Laboratories, Inc.

The results in this report apply to the samples analyzed in accordance with the chain of custody document. This analytical report must be reproduced in its entirety.

Daniel Chavez, Project Manager

SunStar Laboratories, Inc.
Providing Quality Analytical Services Nationwide

25712 Commercentre Drive
Lake Forest, California 92630
949.297.5020 Phone
949.297.5027 Fax

Murex	Project: Cenco	
2640 Walnut Ave. Unit F	Project Number: 1003-001-300	**Reported:**
Tustin CA, 92780	Project Manager: Jeremy Squire	02/11/11 16:19

LL_W16C_020711

T110129-04 (Water)

Analyte	Result	Reporting Limit	Units	Dilution	Batch	Prepared	Analyzed	Method	Notes
SunStar Laboratories, Inc.									
Purgeable Petroleum Hydrocarbons by EPA 8015C									
C6-C12 (GRO)	**440**	50	ug/l	1	1020812	02/08/11	02/09/11	EPA 8015C	
Surrogate 4-Bromofluorobenzene		*93.3 %*	*72.6-146*		"	"	"	"	
Volatile Organic Compounds by EPA Method 8260B									
Bromobenzene	ND	1.0	ug/l	1	1020811	02/08/11	02/10/11	EPA 8260B	
Bromochloromethane	ND	1.0	"	"	"	"	"	"	
Bromodichloromethane	ND	1.0	"	"	"	"	"	"	
Bromoform	ND	1.0	"	"	"	"	"	"	
Bromomethane	ND	1.0	"	"	"	"	"	"	
n-Butylbenzene	ND	1.0	"	"	"	"	"	"	
sec-Butylbenzene	ND	1.0	"	"	"	"	"	"	
tert-Butylbenzene	ND	1.0	"	"	"	"	"	"	
Carbon tetrachloride	ND	0.50	"	"	"	"	"	"	
Chlorobenzene	**14**	1.0	"	"	"	"	"	"	
Chloroethane	ND	1.0	"	"	"	"	"	"	
Chloroform	ND	1.0	"	"	"	"	"	"	
Chloromethane	ND	1.0	"	"	"	"	"	"	
2-Chlorotoluene	ND	1.0	"	"	"	"	"	"	
4-Chlorotoluene	ND	1.0	"	"	"	"	"	"	
Dibromochloromethane	ND	1.0	"	"	"	"	"	"	
1,2-Dibromo-3-chloropropane	ND	1.0	"	"	"	"	"	"	
1,2-Dibromoethane (EDB)	ND	1.0	"	"	"	"	"	"	
Dibromomethane	ND	1.0	"	"	"	"	"	"	
1,2-Dichlorobenzene	**2.1**	1.0	"	"	"	"	"	"	
1,3-Dichlorobenzene	ND	1.0	"	"	"	"	"	"	
1,4-Dichlorobenzene	ND	1.0	"	"	"	"	"	"	
Dichlorodifluoromethane	ND	0.50	"	"	"	"	"	"	
1,1-Dichloroethane	**22**	1.0	"	"	"	"	"	"	
1,2-Dichloroethane	ND	0.50	"	"	"	"	"	"	
1,1-Dichloroethene	**3.3**	1.0	"	"	"	"	"	"	
cis-1,2-Dichloroethene	**68**	1.0	"	"	"	"	"	"	
trans-1,2-Dichloroethene	**15**	1.0	"	"	"	"	"	"	
1,2-Dichloropropane	**3.2**	1.0	"	"	"	"	"	"	

SunStar Laboratories, Inc.

The results in this report apply to the samples analyzed in accordance with the chain of custody document. This analytical report must be reproduced in its entirety.

Daniel Chavez, Project Manager

SunStar Laboratories, Inc.
Providing Quality Analytical Services Nationwide

25712 Commercentre Drive
Lake Forest, California 92630
949.297.5020 Phone
949.297.5027 Fax

Murex	Project: Cenco	
2640 Walnut Ave. Unit F	Project Number: 1003-001-300	**Reported:**
Tustin CA, 92780	Project Manager: Jeremy Squire	02/11/11 16:19

LL_W16C_020711

T110129-04 (Water)

SunStar Laboratories, Inc.

Volatile Organic Compounds by EPA Method 8260B

Analyte	Result	Reporting Limit	Units	Dilution	Batch	Prepared	Analyzed	Method	Notes
1,3-Dichloropropane	ND	1.0	ug/l	1	1020811	02/08/11	02/10/11	EPA 8260B	
2,2-Dichloropropane	ND	1.0	"	"	"	"	"	"	
1,1-Dichloropropene	ND	1.0	"	"	"	"	"	"	
cis-1,3-Dichloropropene	ND	0.50	"	"	"	"	"	"	
trans-1,3-Dichloropropene	ND	0.50	"	"	"	"	"	"	
Hexachlorobutadiene	ND	1.0	"	"	"	"	"	"	
Isopropylbenzene	ND	1.0	"	"	"	"	"	"	
p-Isopropyltoluene	ND	1.0	"	"	"	"	"	"	
Methylene chloride	ND	1.0	"	"	"	"	"	"	
Naphthalene	**6.9**	1.0	"	"	"	"	"	"	
n-Propylbenzene	ND	1.0	"	"	"	"	"	"	
Styrene	ND	1.0	"	"	"	"	"	"	
1,1,2,2-Tetrachloroethane	ND	1.0	"	"	"	"	"	"	
1,1,1,2-Tetrachloroethane	ND	1.0	"	"	"	"	"	"	
Tetrachloroethene	ND	1.0	"	"	"	"	"	"	
1,2,3-Trichlorobenzene	ND	1.0	"	"	"	"	"	"	
1,2,4-Trichlorobenzene	ND	1.0	"	"	"	"	"	"	
1,1,2-Trichloroethane	ND	1.0	"	"	"	"	"	"	
1,1,1-Trichloroethane	ND	1.0	"	"	"	"	"	"	
Trichloroethene	ND	1.0	"	"	"	"	"	"	
Trichlorofluoromethane	ND	1.0	"	"	"	"	"	"	
1,2,3-Trichloropropane	ND	1.0	"	"	"	"	"	"	
1,3,5-Trimethylbenzene	ND	1.0	"	"	"	"	"	"	
1,2,4-Trimethylbenzene	ND	1.0	"	"	"	"	"	"	
Vinyl chloride	**14**	1.0	"	"	"	"	"	"	
Benzene	**33**	0.50	"	"	"	"	"	"	
Toluene	**0.54**	0.50	"	"	"	"	"	"	
Ethylbenzene	ND	0.50	"	"	"	"	"	"	
m,p-Xylene	ND	1.0	"	"	"	"	"	"	
o-Xylene	ND	0.50	"	"	"	"	"	"	
Tert-amyl methyl ether	ND	2.0	"	"	"	"	"	"	
Tert-butyl alcohol	ND	10	"	"	"	"	"	"	

SunStar Laboratories, Inc.

The results in this report apply to the samples analyzed in accordance with the chain of custody document. This analytical report must be reproduced in its entirety.

Daniel Chavez, Project Manager

SunStar Laboratories, Inc.
Providing Quality Analytical Services Nationwide

25712 Commercentre Drive
Lake Forest, California 92630
949.297.5020 Phone
949.297.5027 Fax

Murex	Project: Cenco	
2640 Walnut Ave. Unit F	Project Number: 1003-001-300	**Reported:**
Tustin CA, 92780	Project Manager: Jeremy Squire	02/11/11 16:19

LL_W16C_020711

T110129-04 (Water)

Analyte	Result	Reporting Limit	Units	Dilution	Batch	Prepared	Analyzed	Method	Notes
SunStar Laboratories, Inc.									
Volatile Organic Compounds by EPA Method 8260B									
Di-isopropyl ether	ND	2.0	ug/l	1	1020811	02/08/11	02/10/11	EPA 8260B	
Ethyl tert-butyl ether	ND	2.0	"	"	"	"	"	"	
Methyl tert-butyl ether	ND	1.0	"	"	"	"	"	"	
1,1,2-trichloro-1,2,2-trifluoroethane (CFC 113)	ND	5.0	"	"	"	"	"	"	
Surrogate 4-Bromofluorobenzene		*96.4 %*	*77.1-110*		"	"	"	"	
Surrogate Dibromofluoromethane		*87.5 %*	*66.3-111*		"	"	"	"	
Surrogate Toluene-d8		*96.4 %*	*84.7-109*		"	"	"	"	

SunStar Laboratories, Inc.

The results in this report apply to the samples analyzed in accordance with the chain of custody document. This analytical report must be reproduced in its entirety.

Daniel Chavez, Project Manager

SunStar Laboratories, Inc.
Providing Quality Analytical Services Nationwide

25712 Commercentre Drive
Lake Forest, California 92630
949.297.5020 Phone
949.297.5027 Fax

Murex	Project: Cenco	
2640 Walnut Ave. Unit F	Project Number: 1003-001-300	**Reported:**
Tustin CA, 92780	Project Manager: Jeremy Squire	02/11/11 16:19

TB_020711

T110129-05 (Water)

SunStar Laboratories, Inc.

Volatile Organic Compounds by EPA Method 8260B

Analyte	Result	Reporting Limit	Units	Dilution	Batch	Prepared	Analyzed	Method	Notes
Bromobenzene	ND	1.0	ug/l	1	1020811	02/08/11	02/10/11	EPA 8260B	
Bromochloromethane	ND	1.0	"	"	"	"	"	"	
Bromodichloromethane	ND	1.0	"	"	"	"	"	"	
Bromoform	ND	1.0	"	"	"	"	"	"	
Bromomethane	ND	1.0	"	"	"	"	"	"	
n-Butylbenzene	ND	1.0	"	"	"	"	"	"	
sec-Butylbenzene	ND	1.0	"	"	"	"	"	"	
tert-Butylbenzene	ND	1.0	"	"	"	"	"	"	
Carbon tetrachloride	ND	0.50	"	"	"	"	"	"	
Chlorobenzene	ND	1.0	"	"	"	"	"	"	
Chloroethane	ND	1.0	"	"	"	"	"	"	
Chloroform	ND	1.0	"	"	"	"	"	"	
Chloromethane	ND	1.0	"	"	"	"	"	"	
2-Chlorotoluene	ND	1.0	"	"	"	"	"	"	
4-Chlorotoluene	ND	1.0	"	"	"	"	"	"	
Dibromochloromethane	ND	1.0	"	"	"	"	"	"	
1,2-Dibromo-3-chloropropane	ND	1.0	"	"	"	"	"	"	
1,2-Dibromoethane (EDB)	ND	1.0	"	"	"	"	"	"	
Dibromomethane	ND	1.0	"	"	"	"	"	"	
1,2-Dichlorobenzene	ND	1.0	"	"	"	"	"	"	
1,3-Dichlorobenzene	ND	1.0	"	"	"	"	"	"	
1,4-Dichlorobenzene	ND	1.0	"	"	"	"	"	"	
Dichlorodifluoromethane	ND	0.50	"	"	"	"	"	"	
1,1-Dichloroethane	ND	1.0	"	"	"	"	"	"	
1,2-Dichloroethane	ND	0.50	"	"	"	"	"	"	
1,1-Dichloroethene	ND	1.0	"	"	"	"	"	"	
cis-1,2-Dichloroethene	ND	1.0	"	"	"	"	"	"	
trans-1,2-Dichloroethene	ND	1.0	"	"	"	"	"	"	
1,2-Dichloropropane	ND	1.0	"	"	"	"	"	"	
1,3-Dichloropropane	ND	1.0	"	"	"	"	"	"	
2,2-Dichloropropane	ND	1.0	"	"	"	"	"	"	
1,1-Dichloropropene	ND	1.0	"	"	"	"	"	"	

SunStar Laboratories, Inc.

The results in this report apply to the samples analyzed in accordance with the chain of custody document. This analytical report must be reproduced in its entirety.

Daniel Chavez, Project Manager

SunStar Laboratories, Inc.
Providing Quality Analytical Services Nationwide

25712 Commercentre Drive
Lake Forest, California 92630
949.297.5020 Phone
949.297.5027 Fax

Murex	Project: Cenco	
2640 Walnut Ave. Unit F	Project Number: 1003-001-300	**Reported:**
Tustin CA, 92780	Project Manager: Jeremy Squire	02/11/11 16:19

TB_020711

T110129-05 (Water)

SunStar Laboratories, Inc.

Volatile Organic Compounds by EPA Method 8260B

Analyte	Result	Reporting Limit	Units	Dilution	Batch	Prepared	Analyzed	Method	Notes
cis-1,3-Dichloropropene	ND	0.50	ug/l	1	1020811	02/08/11	02/10/11	EPA 8260B	
trans-1,3-Dichloropropene	ND	0.50	"	"	"	"	"	"	
Hexachlorobutadiene	ND	1.0	"	"	"	"	"	"	
Isopropylbenzene	ND	1.0	"	"	"	"	"	"	
p-Isopropyltoluene	ND	1.0	"	"	"	"	"	"	
Methylene chloride	ND	1.0	"	"	"	"	"	"	
Naphthalene	ND	1.0	"	"	"	"	"	"	
n-Propylbenzene	ND	1.0	"	"	"	"	"	"	
Styrene	ND	1.0	"	"	"	"	"	"	
1,1,2,2-Tetrachloroethane	ND	1.0	"	"	"	"	"	"	
1,1,1,2-Tetrachloroethane	ND	1.0	"	"	"	"	"	"	
Tetrachloroethene	ND	1.0	"	"	"	"	"	"	
1,2,3-Trichlorobenzene	ND	1.0	"	"	"	"	"	"	
1,2,4-Trichlorobenzene	ND	1.0	"	"	"	"	"	"	
1,1,2-Trichloroethane	ND	1.0	"	"	"	"	"	"	
1,1,1-Trichloroethane	ND	1.0	"	"	"	"	"	"	
Trichloroethene	ND	1.0	"	"	"	"	"	"	
Trichlorofluoromethane	ND	1.0	"	"	"	"	"	"	
1,2,3-Trichloropropane	ND	1.0	"	"	"	"	"	"	
1,3,5-Trimethylbenzene	ND	1.0	"	"	"	"	"	"	
1,2,4-Trimethylbenzene	ND	1.0	"	"	"	"	"	"	
Vinyl chloride	ND	1.0	"	"	"	"	"	"	
Benzene	ND	0.50	"	"	"	"	"	"	
Toluene	ND	0.50	"	"	"	"	"	"	
Ethylbenzene	ND	0.50	"	"	"	"	"	"	
m,p-Xylene	ND	1.0	"	"	"	"	"	"	
o-Xylene	ND	0.50	"	"	"	"	"	"	
Tert-amyl methyl ether	ND	2.0	"	"	"	"	"	"	
Tert-butyl alcohol	ND	10	"	"	"	"	"	"	
Di-isopropyl ether	ND	2.0	"	"	"	"	"	"	
Ethyl tert-butyl ether	ND	2.0	"	"	"	"	"	"	
Methyl tert-butyl ether	ND	1.0	"	"	"	"	"	"	

SunStar Laboratories, Inc.

The results in this report apply to the samples analyzed in accordance with the chain of custody document. This analytical report must be reproduced in its entirety.

Daniel Chavez, Project Manager

SunStar Laboratories, Inc.
PROVIDING QUALITY ANALYTICAL SERVICES NATIONWIDE

25712 Commercentre Drive
Lake Forest, California 92630
949.297.5020 Phone
949.297.5027 Fax

Murex	Project: Cenco	
2640 Walnut Ave. Unit F	Project Number: 1003-001-300	**Reported:**
Tustin CA, 92780	Project Manager: Jeremy Squire	02/11/11 16:19

TB_020711

T110129-05 (Water)

Analyte	Result	Reporting Limit	Units	Dilution	Batch	Prepared	Analyzed	Method	Notes
SunStar Laboratories, Inc.									
Volatile Organic Compounds by EPA Method 8260B									
1,1,2-trichloro-1,2,2-trifluoroethane (CFC 113)	ND	5.0	ug/l	1	1020811	02/08/11	02/10/11	EPA 8260B	
Surrogate 4-Bromofluorobenzene		*97.6 %*	*77.1-110*		"	"	"	"	
Surrogate Dibromofluoromethane		*87.1 %*	*66.3-111*		"	"	"	"	
Surrogate Toluene-d8		*97.6 %*	*84.7-109*		"	"	"	"	

SunStar Laboratories, Inc.

The results in this report apply to the samples analyzed in accordance with the chain of custody document. This analytical report must be reproduced in its entirety.

Daniel Chavez, Project Manager

SunStar Laboratories, Inc.
Providing Quality Analytical Services Nationwide

25712 Commercentre Drive
Lake Forest, California 92630
949.297.5020 Phone
949.297.5027 Fax

Murex	Project: Cenco	
2640 Walnut Ave. Unit F	Project Number: 1003-001-300	**Reported:**
Tustin CA, 92780	Project Manager: Jeremy Squire	02/11/11 16:19

Purgeable Petroleum Hydrocarbons by EPA 8015C - Quality Control

SunStar Laboratories, Inc.

Analyte	Result	Reporting Limit	Units	Spike Level	Source Result	%REC	%REC Limits	RPD	RPD Limit	Notes
Batch 1020812 - EPA 5030 GC										
Blank (1020812-BLK1)				Prepared: 02/08/11	Analyzed: 02/09/11					
C6-C12 (GRO)	ND	50	ug/l							
Surrogate 4-Bromofluorobenzene	*222*		*"*	*200*		*111*	*72.6-146*			
LCS (1020812-BS1)				Prepared: 02/08/11	Analyzed: 02/09/11					
C6-C12 (GRO)	4550	50	ug/l	5500		82.8	75-125			
Surrogate 4-Bromofluorobenzene	*219*		*"*	*200*		*109*	*72.6-146*			
LCS Dup (1020812-BSD1)				Prepared: 02/08/11	Analyzed: 02/09/11					
C6-C12 (GRO)	4770	50	ug/l	5500		86.8	75-125	4.78	20	
Surrogate 4-Bromofluorobenzene	*208*		*"*	*200*		*104*	*72.6-146*			

SunStar Laboratories, Inc.

The results in this report apply to the samples analyzed in accordance with the chain of custody document. This analytical report must be reproduced in its entirety.

Daniel Chavez, Project Manager

SunStar Laboratories, Inc.
Providing Quality Analytical Services Nationwide

25712 Commercentre Drive
Lake Forest, California 92630
949.297.5020 Phone
949.297.5027 Fax

Murex	Project: Cenco	
2640 Walnut Ave. Unit F	Project Number: 1003-001-300	**Reported:**
Tustin CA, 92780	Project Manager: Jeremy Squire	02/11/11 16:19

Volatile Organic Compounds by EPA Method 8260B - Quality Control

SunStar Laboratories, Inc.

Analyte	Result	Reporting Limit	Units	Spike Level	Source Result	%REC	%REC Limits	RPD	RPD Limit	Notes
Batch 1020811 - EPA 5030 GCMS										
Blank (1020811-BLK1)				Prepared: 02/08/11 Analyzed: 02/10/11						
Bromobenzene	ND	1.0	ug/l							
Bromochloromethane	ND	1.0	"							
Bromodichloromethane	ND	1.0	"							
Bromoform	ND	1.0	"							
Bromomethane	ND	1.0	"							
n-Butylbenzene	ND	1.0	"							
sec-Butylbenzene	ND	1.0	"							
tert-Butylbenzene	ND	1.0	"							
Carbon tetrachloride	ND	0.50	"							
Chlorobenzene	ND	1.0	"							
Chloroethane	ND	1.0	"							
Chloroform	ND	1.0	"							
Chloromethane	ND	1.0	"							
2-Chlorotoluene	ND	1.0	"							
4-Chlorotoluene	ND	1.0	"							
Dibromochloromethane	ND	1.0	"							
1,2-Dibromo-3-chloropropane	ND	1.0	"							
1,2-Dibromoethane (EDB)	ND	1.0	"							
Dibromomethane	ND	1.0	"							
1,2-Dichlorobenzene	ND	1.0	"							
1,3-Dichlorobenzene	ND	1.0	"							
1,4-Dichlorobenzene	ND	1.0	"							
Dichlorodifluoromethane	ND	0.50	"							
1,1-Dichloroethane	ND	1.0	"							
1,2-Dichloroethane	ND	0.50	"							
1,1-Dichloroethene	ND	1.0	"							
cis-1,2-Dichloroethene	ND	1.0	"							
trans-1,2-Dichloroethene	ND	1.0	"							
1,2-Dichloropropane	ND	1.0	"							
1,3-Dichloropropane	ND	1.0	"							
2,2-Dichloropropane	ND	1.0	"							
1,1-Dichloropropene	ND	1.0	"							
cis-1,3-Dichloropropene	ND	0.50	"							
trans-1,3-Dichloropropene	ND	0.50	"							
Hexachlorobutadiene	ND	1.0	"							
Isopropylbenzene	ND	1.0	"							

SunStar Laboratories, Inc.

The results in this report apply to the samples analyzed in accordance with the chain of custody document. This analytical report must be reproduced in its entirety.

Daniel Chavez, Project Manager

SunStar Laboratories, Inc.
Providing Quality Analytical Services Nationwide

25712 Commercentre Drive
Lake Forest, California 92630
949.297.5020 Phone
949.297.5027 Fax

Murex	Project: Cenco	
2640 Walnut Ave. Unit F	Project Number: 1003-001-300	**Reported:**
Tustin CA, 92780	Project Manager: Jeremy Squire	02/11/11 16:19

Volatile Organic Compounds by EPA Method 8260B - Quality Control

SunStar Laboratories, Inc.

Analyte	Result	Reporting Limit	Units	Spike Level	Source Result	%REC	%REC Limits	RPD	RPD Limit	Notes
Batch 1020811 - EPA 5030 GCMS										
Blank (1020811-BLK1)				Prepared: 02/08/11 Analyzed: 02/10/11						
p-Isopropyltoluene	ND	1.0	ug/l							
Methylene chloride	ND	1.0	"							
Naphthalene	ND	1.0	"							
n-Propylbenzene	ND	1.0	"							
Styrene	ND	1.0	"							
1,1,2,2-Tetrachloroethane	ND	1.0	"							
1,1,1,2-Tetrachloroethane	ND	1.0	"							
Tetrachloroethene	ND	1.0	"							
1,2,3-Trichlorobenzene	ND	1.0	"							
1,2,4-Trichlorobenzene	ND	1.0	"							
1,1,2-Trichloroethane	ND	1.0	"							
1,1,1-Trichloroethane	ND	1.0	"							
Trichloroethene	ND	1.0	"							
Trichlorofluoromethane	ND	1.0	"							
1,2,3-Trichloropropane	ND	1.0	"							
1,3,5-Trimethylbenzene	ND	1.0	"							
1,2,4-Trimethylbenzene	ND	1.0	"							
Vinyl chloride	ND	1.0	"							
Benzene	ND	0.50	"							
Toluene	ND	0.50	"							
Ethylbenzene	ND	0.50	"							
m,p-Xylene	ND	1.0	"							
o-Xylene	ND	0.50	"							
Tert-amyl methyl ether	ND	2.0	"							
Tert-butyl alcohol	ND	10	"							
Di-isopropyl ether	ND	2.0	"							
Ethyl tert-butyl ether	ND	2.0	"							
Methyl tert-butyl ether	ND	1.0	"							
1,1,2-trichloro-1,2,2-trifluoroethane (CFC 113)	ND	5.0	"							
Surrogate 4-Bromofluorobenzene	*7.85*		*"*	*8.00*		*98.1*	*77.1-110*			
Surrogate Dibromofluoromethane	*6.85*		*"*	*8.00*		*85.6*	*66.3-111*			
Surrogate Toluene-d8	*7.54*		*"*	*8.00*		*94.2*	*84.7-109*			

SunStar Laboratories, Inc.

The results in this report apply to the samples analyzed in accordance with the chain of custody document. This analytical report must be reproduced in its entirety.

Daniel Chavez, Project Manager

SunStar Laboratories, Inc.
Providing Quality Analytical Services Nationwide

25712 Commercentre Drive
Lake Forest, California 92630
949.297.5020 Phone
949.297.5027 Fax

Murex	Project: Cenco	
2640 Walnut Ave. Unit F	Project Number: 1003-001-300	**Reported:**
Tustin CA, 92780	Project Manager: Jeremy Squire	02/11/11 16:19

Volatile Organic Compounds by EPA Method 8260B - Quality Control

SunStar Laboratories, Inc.

Analyte	Result	Reporting Limit	Units	Spike Level	Source Result	%REC	%REC Limits	RPD	RPD Limit	Notes
Batch 1020811 - EPA 5030 GCMS										
LCS (1020811-BS1)				Prepared: 02/08/11	Analyzed: 02/10/11					
Chlorobenzene	22.4	1.0	ug/l	20.0		112	75-125			
1,1-Dichloroethene	20 3	1.0	"	20.0		101	75-125			
Trichloroethene	16 9	1.0	"	20.0		84.4	75-125			
Benzene	21.7	0.50	"	20.0		108	75-125			
Toluene	24 3	0.50	"	20.0		122	75-125			
Surrogate 4-Bromofluorobenzene	*8.40*		*"*	*8.00*		*105*	*77.1-110*			
Surrogate Dibromofluoromethane	*6.61*		*"*	*8.00*		*82.6*	*66.3-111*			
Surrogate Toluene-d8	*8.61*		*"*	*8.00*		*108*	*84.7-109*			
LCS Dup (1020811-BSD1)				Prepared: 02/08/11	Analyzed: 02/10/11					
Chlorobenzene	24 2	1.0	ug/l	20.0		121	75-125	7.75	20	
1,1-Dichloroethene	24 3	1.0	"	20.0		122	75-125	18.0	20	
Trichloroethene	18.4	1.0	"	20.0		92.0	75-125	8.62	20	
Benzene	22.6	0.50	"	20.0		113	75-125	4.29	20	
Toluene	22.4	0.50	"	20.0		112	75-125	8.22	20	
Surrogate 4-Bromofluorobenzene	*7.95*		*"*	*8.00*		*99.4*	*77.1-110*			
Surrogate Dibromofluoromethane	*7.20*		*"*	*8.00*		*90.0*	*66.3-111*			
Surrogate Toluene-d8	*8.03*		*"*	*8.00*		*100*	*84.7-109*			

SunStar Laboratories, Inc.

The results in this report apply to the samples analyzed in accordance with the chain of custody document. This analytical report must be reproduced in its entirety.

Daniel Chavez, Project Manager

SunStar Laboratories, Inc.
PROVIDING QUALITY ANALYTICAL SERVICES NATIONWIDE

25712 Commercentre Drive
Lake Forest, California 92630
949.297.5020 Phone
949.297.5027 Fax

Murex	Project: Cenco	
2640 Walnut Ave. Unit F	Project Number: 1003-001-300	**Reported:**
Tustin CA, 92780	Project Manager: Jeremy Squire	02/11/11 16:19

Notes and Definitions

DET	Analyte DETECTED
ND	Analyte NOT DETECTED at or above the reporting limit
NR	Not Reported
dry	Sample results reported on a dry weight basis
RPD	Relative Percent Difference

SunStar Laboratories, Inc.

The results in this report apply to the samples analyzed in accordance with the chain of custody document. This analytical report must be reproduced in its entirety.

Daniel Chavez, Project Manager

SunStar Laboratories, Inc.
25712 Commercentre Dr
Lake Forest, CA 92630
949-297-5020

Chain of Custody Record

Client: Murex Environmental, Inc.
Address: 2640 Walnut Ave, Unit F
Phone: (714) 508-0800 Fax: (714) 508-0880
Project Manager: Jeremy Squire (714) 604-5836

Date: 2·7·2011 Page: 1 Of 1
Project Name: CENCO
Collector: F. Sosic Client Project #: 1003-001-300
Batch #: T110129 EDF #:

Sample ID	Date Sampled	Time	Sample Type	8260 (VOCs NO OXY)	8260 + OXY	1,4-Dioxane	8270 Semi-Volatiles (PAHs, etc)	8021 BTEX	8015M (TPH gasoline)	8015M (TPH diesel)	Hexavalent Chromium (7199)	6010/7000 Title 22 Metals	PCBs				Total # of containers	Comments/Preservative	Laboratory ID #
LL_W8_020711	2·7·2011	0830	GW		X				X								6		01
LL_W16A_020711		1300	GW		X				X								6		02
LL_W16B_020711		1500	GW		X				X								6		03
LL_W16C_020711		1600	GW		X				X								6		04
TB_020711			Water		X												2		05

Relinquished by: (signature)	Date / Time	Received by: (signat	Date / Time
[signature]	2·7·2011 1700	[signature]	2/7/11 1700
Relinquished by: (signature)	Date / Time	Received by: (signat	Date / Time
Relinquished by: (signature)	Date / Time	Received by: (signat	Date / Time

Total # of containers	26
Chain of Custody seals	N
Seals intact? Y/N/NA	N/A
Received good condition/cold	Y
Turn around time:	

Notes
22°

Sample disposal Instructions: Disposal @ $2.00 each ____ Return to client ____ Pickup ____

SunStar Laboratories, Inc.
PROVIDING QUALITY ANALYTICAL SERVICES NATIONWIDE

SAMPLE RECEIVING REVIEW SHEET

BATCH # T110129

Client Name: MUREX Project: CENCO

Received by: DAN Date/Time Received: 2/7/11 1700

Delivered by : ☐ Client ☒ SunStar Courier ☐ GSO ☐ FedEx ☐ Other _____

Total number of coolers received 0 **Temp criteria = 6°C > 0°C (no frozen containers)**

Temperature: cooler #1 2.4 °C +/- the CF (- 0.2°C) = 2.2 °C corrected temperature

cooler #2 _____ °C +/- the CF (- 0.2°C) = _____ °C corrected temperature

cooler #3 _____ °C +/- the CF (- 0.2°C) = _____ °C corrected temperature

Samples outside temp. but received on ice, w/in 6 hours of final sampling.	☒Yes	☐No*	☐N/A
Custody Seals Intact on Cooler/Sample	☐Yes	☐No*	☒N/A
Sample Containers Intact	☒Yes	☐No*	
Sample labels match COC ID's	☒Yes	☐No*	
Total number of containers received match COC	☒Yes	☐No*	
Proper containers received for analyses requested on COC	☒Yes	☐No*	
Proper preservative indicated on COC/containers for analyses requested	☒Yes	☐No*	☐N/A

Complete shipment received in good condition with correct temperatures, containers, labels, volumes preservatives and within method specified holding times. ☒ **Yes** ☐**No***

* Complete Non-Conformance Receiving Sheet if checked Cooler/Sample Review - Initials and date BC 2/8/11

Comments:

SunStar Laboratories, Inc.
PROVIDING QUALITY ANALYTICAL SERVICES NATIONWIDE

25712 Commercentre Drive
Lake Forest, California 92630
949.297.5020 Phone
949.297.5027 Fax

14 February 2011

Jeremy Squire
Murex
2640 Walnut Ave. Unit F
Tustin, CA 92780

RE: Cenco

Enclosed are the results of analyses for samples received by the laboratory on 02/08/11 13:28. If you have any questions concerning this report, please feel free to contact me.

Sincerely,

Daniel Chavez
Project Manager

SunStar Laboratories, Inc.
PROVIDING QUALITY ANALYTICAL SERVICES NATIONWIDE

25712 Commercentre Drive
Lake Forest, California 92630
949.297.5020 Phone
949.297.5027 Fax

Murex	Project: Cenco	
2640 Walnut Ave. Unit F	Project Number: 1003-001-300	**Reported:**
Tustin CA, 92780	Project Manager: Jeremy Squire	02/14/11 16:05

ANALYTICAL REPORT FOR SAMPLES

Sample ID	Laboratory ID	Matrix	Date Sampled	Date Received
LL_W4_020811	T110134-01	Water	02/08/11 09:00	02/08/11 13:28
LL_W10_020811	T110134-02	Water	02/08/11 10:00	02/08/11 13:28
LL_MW710_020811_01	T110134-03	Water	02/08/11 11:45	02/08/11 13:28
LL_MW710_020811_02	T110134-04	Water	02/08/11 12:15	02/08/11 13:28
LL_MW711_020811	T110134-05	Water	02/08/11 12:30	02/08/11 13:28
TB_020811	T110134-06	Water	02/08/11 00:00	02/08/11 13:28

SunStar Laboratories, Inc.

The results in this report apply to the samples analyzed in accordance with the chain of custody document. This analytical report must be reproduced in its entirety.

Daniel Chavez, Project Manager

SunStar Laboratories, Inc.
Providing Quality Analytical Services Nationwide

25712 Commercentre Drive
Lake Forest, California 92630
949.297.5020 Phone
949.297.5027 Fax

Murex	Project: Cenco	
2640 Walnut Ave. Unit F	Project Number: 1003-001-300	**Reported:**
Tustin CA, 92780	Project Manager: Jeremy Squire	02/14/11 16:05

LL_W4_020811

T110134-01 (Water)

Analyte	Result	Reporting Limit	Units	Dilution	Batch	Prepared	Analyzed	Method	Notes
SunStar Laboratories, Inc.									
Purgeable Petroleum Hydrocarbons by EPA 8015C									
C6-C12 (GRO)	**1800**	50	ug/l	1	1020812	02/08/11	02/09/11	EPA 8015C	
Surrogate 4-Bromofluorobenzene		*80.2 %*	*72.6-146*		"	"	"	"	
Volatile Organic Compounds by EPA Method 8260B									
Bromobenzene	ND	1.0	ug/l	1	1020811	02/08/11	02/10/11	EPA 8260B	
Bromochloromethane	ND	1.0	"	"	"	"	"	"	
Bromodichloromethane	ND	1.0	"	"	"	"	"	"	
Bromoform	ND	1.0	"	"	"	"	"	"	
Bromomethane	ND	1.0	"	"	"	"	"	"	
n-Butylbenzene	ND	1.0	"	"	"	"	"	"	
sec-Butylbenzene	**2.3**	1.0	"	"	"	"	"	"	
tert-Butylbenzene	ND	1.0	"	"	"	"	"	"	
Carbon tetrachloride	ND	0.50	"	"	"	"	"	"	
Chlorobenzene	ND	1.0	"	"	"	"	"	"	
Chloroethane	ND	1.0	"	"	"	"	"	"	
Chloroform	ND	1.0	"	"	"	"	"	"	
Chloromethane	ND	1.0	"	"	"	"	"	"	
2-Chlorotoluene	ND	1.0	"	"	"	"	"	"	
4-Chlorotoluene	ND	1.0	"	"	"	"	"	"	
Dibromochloromethane	ND	1.0	"	"	"	"	"	"	
1,2-Dibromo-3-chloropropane	ND	1.0	"	"	"	"	"	"	
1,2-Dibromoethane (EDB)	ND	1.0	"	"	"	"	"	"	
Dibromomethane	ND	1.0	"	"	"	"	"	"	
1,2-Dichlorobenzene	ND	1.0	"	"	"	"	"	"	
1,3-Dichlorobenzene	ND	1.0	"	"	"	"	"	"	
1,4-Dichlorobenzene	ND	1.0	"	"	"	"	"	"	
Dichlorodifluoromethane	ND	0.50	"	"	"	"	"	"	
1,1-Dichloroethane	ND	1.0	"	"	"	"	"	"	
1,2-Dichloroethane	ND	0.50	"	"	"	"	"	"	
1,1-Dichloroethene	ND	1.0	"	"	"	"	"	"	
cis-1,2-Dichloroethene	**1.0**	1.0	"	"	"	"	"	"	
trans-1,2-Dichloroethene	ND	1.0	"	"	"	"	"	"	

SunStar Laboratories, Inc.

The results in this report apply to the samples analyzed in accordance with the chain of custody document. This analytical report must be reproduced in its entirety.

Daniel Chavez, Project Manager

SunStar Laboratories, Inc.
Providing Quality Analytical Services Nationwide

25712 Commercentre Drive
Lake Forest, California 92630
949.297.5020 Phone
949.297.5027 Fax

Murex	Project: Cenco	
2640 Walnut Ave. Unit F	Project Number: 1003-001-300	**Reported:**
Tustin CA, 92780	Project Manager: Jeremy Squire	02/14/11 16:05

LL_W4_020811

T110134-01 (Water)

SunStar Laboratories, Inc.

Volatile Organic Compounds by EPA Method 8260B

Analyte	Result	Reporting Limit	Units	Dilution	Batch	Prepared	Analyzed	Method	Notes
1,2-Dichloropropane	ND	1.0	ug/l	1	1020811	02/08/11	02/10/11	EPA 8260B	
1,3-Dichloropropane	ND	1.0	"	"	"	"	"	"	
2,2-Dichloropropane	ND	1.0	"	"	"	"	"	"	
1,1-Dichloropropene	ND	1.0	"	"	"	"	"	"	
cis-1,3-Dichloropropene	ND	0.50	"	"	"	"	"	"	
trans-1,3-Dichloropropene	ND	0.50	"	"	"	"	"	"	
Hexachlorobutadiene	ND	1.0	"	"	"	"	"	"	
Isopropylbenzene	**21**	1.0	"	"	"	"	"	"	
p-Isopropyltoluene	ND	1.0	"	"	"	"	"	"	
Methylene chloride	ND	1.0	"	"	"	"	"	"	
Naphthalene	ND	1.0	"	"	"	"	"	"	
n-Propylbenzene	**10**	1.0	"	"	"	"	"	"	
Styrene	ND	1.0	"	"	"	"	"	"	
1,1,2,2-Tetrachloroethane	ND	1.0	"	"	"	"	"	"	
1,1,1,2-Tetrachloroethane	ND	1.0	"	"	"	"	"	"	
Tetrachloroethene	ND	1.0	"	"	"	"	"	"	
1,2,3-Trichlorobenzene	ND	1.0	"	"	"	"	"	"	
1,2,4-Trichlorobenzene	ND	1.0	"	"	"	"	"	"	
1,1,2-Trichloroethane	ND	1.0	"	"	"	"	"	"	
1,1,1-Trichloroethane	ND	1.0	"	"	"	"	"	"	
Trichloroethene	ND	1.0	"	"	"	"	"	"	
Trichlorofluoromethane	ND	1.0	"	"	"	"	"	"	
1,2,3-Trichloropropane	ND	1.0	"	"	"	"	"	"	
1,3,5-Trimethylbenzene	ND	1.0	"	"	"	"	"	"	
1,2,4-Trimethylbenzene	ND	1.0	"	"	"	"	"	"	
Vinyl chloride	**8.6**	1.0	"	"	"	"	"	"	
Benzene	**480**	12	"	25	"	"	02/11/11	"	
Toluene	ND	0.50	"	1	"	"	02/10/11	"	
Ethylbenzene	**1.2**	0.50	"	"	"	"	"	"	
m,p-Xylene	ND	1.0	"	"	"	"	"	"	
o-Xylene	ND	0.50	"	"	"	"	"	"	
Tert-amyl methyl ether	ND	2.0	"	"	"	"	"	"	

SunStar Laboratories, Inc.

The results in this report apply to the samples analyzed in accordance with the chain of custody document. This analytical report must be reproduced in its entirety.

Daniel Chavez, Project Manager

SunStar Laboratories, Inc.
PROVIDING QUALITY ANALYTICAL SERVICES NATIONWIDE

25712 Commercentre Drive
Lake Forest, California 92630
949.297.5020 Phone
949.297.5027 Fax

Murex	Project: Cenco	
2640 Walnut Ave. Unit F	Project Number: 1003-001-300	**Reported:**
Tustin CA, 92780	Project Manager: Jeremy Squire	02/14/11 16:05

LL_W4_020811

T110134-01 (Water)

Analyte	Result	Reporting Limit	Units	Dilution	Batch	Prepared	Analyzed	Method	Notes
SunStar Laboratories, Inc.									
Volatile Organic Compounds by EPA Method 8260B									
Tert-butyl alcohol	ND	10	ug/l	1	1020811	02/08/11	02/10/11	EPA 8260B	
Di-isopropyl ether	ND	2.0	"	"	"	"	"	"	
Ethyl tert-butyl ether	ND	2.0	"	"	"	"	"	"	
Methyl tert-butyl ether	ND	1.0	"	"	"	"	"	"	
1,1,2-trichloro-1,2,2-trifluoroethane (CFC 113)	ND	5.0	"	"	"	"	"	"	
Surrogate 4-Bromofluorobenzene		*96.0 %*	*77.1-110*		"	"	"	"	
Surrogate Dibromofluoromethane		*89.2 %*	*66.3-111*		"	"	"	"	
Surrogate Toluene-d8		*99.4 %*	*84.7-109*		"	"	"	"	

SunStar Laboratories, Inc.

The results in this report apply to the samples analyzed in accordance with the chain of custody document. This analytical report must be reproduced in its entirety.

Daniel Chavez, Project Manager

SunStar Laboratories, Inc.
Providing Quality Analytical Services Nationwide

25712 Commercentre Drive
Lake Forest, California 92630
949.297.5020 Phone
949.297.5027 Fax

Murex	Project: Cenco	
2640 Walnut Ave. Unit F	Project Number: 1003-001-300	**Reported:**
Tustin CA, 92780	Project Manager: Jeremy Squire	02/14/11 16:05

LL_W10_020811

T110134-02 (Water)

Analyte	Result	Reporting Limit	Units	Dilution	Batch	Prepared	Analyzed	Method	Notes
SunStar Laboratories, Inc.									
Purgeable Petroleum Hydrocarbons by EPA 8015C									
C6-C12 (GRO)	**11000**	50	ug/l	1	1020812	02/08/11	02/09/11	EPA 8015C	
Surrogate 4-Bromofluorobenzene		*104 %*	*72.6-146*		"	"	"	"	
Volatile Organic Compounds by EPA Method 8260B									
Bromobenzene	ND	1.0	ug/l	1	1020811	02/08/11	02/10/11	EPA 8260B	
Bromochloromethane	ND	1.0	"	"	"	"	"	"	
Bromodichloromethane	ND	1.0	"	"	"	"	"	"	
Bromoform	ND	1.0	"	"	"	"	"	"	
Bromomethane	ND	1.0	"	"	"	"	"	"	
n-Butylbenzene	**4.2**	1.0	"	"	"	"	"	"	
sec-Butylbenzene	**6.1**	1.0	"	"	"	"	"	"	
tert-Butylbenzene	ND	1.0	"	"	"	"	"	"	
Carbon tetrachloride	ND	0.50	"	"	"	"	"	"	
Chlorobenzene	ND	1.0	"	"	"	"	"	"	
Chloroethane	ND	1.0	"	"	"	"	"	"	
Chloroform	ND	1.0	"	"	"	"	"	"	
Chloromethane	ND	1.0	"	"	"	"	"	"	
2-Chlorotoluene	ND	1.0	"	"	"	"	"	"	
4-Chlorotoluene	ND	1.0	"	"	"	"	"	"	
Dibromochloromethane	ND	1.0	"	"	"	"	"	"	
1,2-Dibromo-3-chloropropane	ND	1.0	"	"	"	"	"	"	
1,2-Dibromoethane (EDB)	ND	1.0	"	"	"	"	"	"	
Dibromomethane	ND	1.0	"	"	"	"	"	"	
1,2-Dichlorobenzene	ND	1.0	"	"	"	"	"	"	
1,3-Dichlorobenzene	ND	1.0	"	"	"	"	"	"	
1,4-Dichlorobenzene	ND	1.0	"	"	"	"	"	"	
Dichlorodifluoromethane	ND	0.50	"	"	"	"	"	"	
1,1-Dichloroethane	ND	1.0	"	"	"	"	"	"	
1,2-Dichloroethane	**4.0**	0.50	"	"	"	"	"	"	
1,1-Dichloroethene	ND	1.0	"	"	"	"	"	"	
cis-1,2-Dichloroethene	ND	1.0	"	"	"	"	"	"	
trans-1,2-Dichloroethene	ND	1.0	"	"	"	"	"	"	
1,2-Dichloropropane	ND	1.0	"	"	"	"	"	"	

SunStar Laboratories, Inc.

The results in this report apply to the samples analyzed in accordance with the chain of custody document. This analytical report must be reproduced in its entirety.

Daniel Chavez, Project Manager

SunStar Laboratories, Inc.
Providing Quality Analytical Services Nationwide

25712 Commercentre Drive
Lake Forest, California 92630
949.297.5020 Phone
949.297.5027 Fax

Murex	Project: Cenco	
2640 Walnut Ave. Unit F	Project Number: 1003-001-300	**Reported:**
Tustin CA, 92780	Project Manager: Jeremy Squire	02/14/11 16:05

LL_W10_020811

T110134-02 (Water)

SunStar Laboratories, Inc.

Volatile Organic Compounds by EPA Method 8260B

Analyte	Result	Reporting Limit	Units	Dilution	Batch	Prepared	Analyzed	Method	Notes
1,3-Dichloropropane	ND	1.0	ug/l	1	1020811	02/08/11	02/10/11	EPA 8260B	
2,2-Dichloropropane	ND	1.0	"	"	"	"	"	"	
1,1-Dichloropropene	ND	1.0	"	"	"	"	"	"	
cis-1,3-Dichloropropene	ND	0.50	"	"	"	"	"	"	
trans-1,3-Dichloropropene	ND	0.50	"	"	"	"	"	"	
Hexachlorobutadiene	ND	1.0	"	"	"	"	"	"	
Isopropylbenzene	**31**	1.0	"	"	"	"	"	"	
p-Isopropyltoluene	**1.7**	1.0	"	"	"	"	"	"	
Methylene chloride	ND	1.0	"	"	"	"	"	"	
Naphthalene	**150**	1.0	"	"	"	"	"	"	
n-Propylbenzene	**43**	1.0	"	"	"	"	"	"	
Styrene	ND	1.0	"	"	"	"	"	"	
1,1,2,2-Tetrachloroethane	ND	1.0	"	"	"	"	"	"	
1,1,1,2-Tetrachloroethane	ND	1.0	"	"	"	"	"	"	
Tetrachloroethene	ND	1.0	"	"	"	"	"	"	
1,2,3-Trichlorobenzene	ND	1.0	"	"	"	"	"	"	
1,2,4-Trichlorobenzene	ND	1.0	"	"	"	"	"	"	
1,1,2-Trichloroethane	ND	1.0	"	"	"	"	"	"	
1,1,1-Trichloroethane	ND	1.0	"	"	"	"	"	"	
Trichloroethene	ND	1.0	"	"	"	"	"	"	
Trichlorofluoromethane	ND	1.0	"	"	"	"	"	"	
1,2,3-Trichloropropane	ND	1.0	"	"	"	"	"	"	
1,3,5-Trimethylbenzene	**13**	1.0	"	"	"	"	"	"	
1,2,4-Trimethylbenzene	**61**	1.0	"	"	"	"	"	"	
Vinyl chloride	ND	1.0	"	"	"	"	"	"	
Benzene	**2600**	12	"	25	"	"	02/11/11	"	
Toluene	**100**	0.50	"	1	"	"	02/10/11	"	
Ethylbenzene	**160**	0.50	"	"	"	"	"	"	
m,p-Xylene	**140**	1.0	"	"	"	"	"	"	
o-Xylene	**28**	0.50	"	"	"	"	"	"	
Tert-amyl methyl ether	ND	2.0	"	"	"	"	"	"	
Tert-butyl alcohol	ND	10	"	"	"	"	"	"	
Di-isopropyl ether	ND	2.0	"	"	"	"	"	"	

SunStar Laboratories, Inc.

The results in this report apply to the samples analyzed in accordance with the chain of custody document. This analytical report must be reproduced in its entirety.

Daniel Chavez, Project Manager

SunStar Laboratories, Inc.
PROVIDING QUALITY ANALYTICAL SERVICES NATIONWIDE

25712 Commercentre Drive
Lake Forest, California 92630
949.297.5020 Phone
949.297.5027 Fax

Murex	Project: Cenco	
2640 Walnut Ave. Unit F	Project Number: 1003-001-300	**Reported:**
Tustin CA, 92780	Project Manager: Jeremy Squire	02/14/11 16:05

LL_W10_020811

T110134-02 (Water)

Analyte	Result	Reporting Limit	Units	Dilution	Batch	Prepared	Analyzed	Method	Notes
SunStar Laboratories, Inc.									
Volatile Organic Compounds by EPA Method 8260B									
Ethyl tert-butyl ether	ND	2.0	ug/l	1	1020811	02/08/11	02/10/11	EPA 8260B	
Methyl tert-butyl ether	ND	1.0	"	"	"	"	"	"	
1,1,2-trichloro-1,2,2-trifluoroethane (CFC 113)	ND	5.0	"	"	"	"	"	"	
Surrogate 4-Bromofluorobenzene		*106 %*	*77.1-110*		"	"	"	"	
Surrogate Dibromofluoromethane		*93.5 %*	*66.3-111*		"	"	"	"	
Surrogate Toluene-d8		*101 %*	*84.7-109*		"	"	"	"	

SunStar Laboratories, Inc.

The results in this report apply to the samples analyzed in accordance with the chain of custody document. This analytical report must be reproduced in its entirety.

Daniel Chavez, Project Manager

SunStar Laboratories, Inc.
Providing Quality Analytical Services Nationwide

25712 Commercentre Drive
Lake Forest, California 92630
949.297.5020 Phone
949.297.5027 Fax

Murex	Project: Cenco	
2640 Walnut Ave. Unit F	Project Number: 1003-001-300	**Reported:**
Tustin CA, 92780	Project Manager: Jeremy Squire	02/14/11 16:05

LL_MW710_020811_01

T110134-03 (Water)

Analyte	Result	Reporting Limit	Units	Dilution	Batch	Prepared	Analyzed	Method	Notes
SunStar Laboratories, Inc.									
Purgeable Petroleum Hydrocarbons by EPA 8015C									
C6-C12 (GRO)	**93**	50	ug/l	1	1020812	02/08/11	02/09/11	EPA 8015C	
Surrogate 4-Bromofluorobenzene		*104 %*	*72.6-146*		"	"	"	"	
Volatile Organic Compounds by EPA Method 8260B									
Bromobenzene	ND	1.0	ug/l	1	1020811	02/08/11	02/10/11	EPA 8260B	
Bromochloromethane	ND	1.0	"	"	"	"	"	"	
Bromodichloromethane	ND	1.0	"	"	"	"	"	"	
Bromoform	ND	1.0	"	"	"	"	"	"	
Bromomethane	ND	1.0	"	"	"	"	"	"	
n-Butylbenzene	ND	1.0	"	"	"	"	"	"	
sec-Butylbenzene	ND	1.0	"	"	"	"	"	"	
tert-Butylbenzene	ND	1.0	"	"	"	"	"	"	
Carbon tetrachloride	ND	0.50	"	"	"	"	"	"	
Chlorobenzene	ND	1.0	"	"	"	"	"	"	
Chloroethane	ND	1.0	"	"	"	"	"	"	
Chloroform	ND	1.0	"	"	"	"	"	"	
Chloromethane	ND	1.0	"	"	"	"	"	"	
2-Chlorotoluene	ND	1.0	"	"	"	"	"	"	
4-Chlorotoluene	ND	1.0	"	"	"	"	"	"	
Dibromochloromethane	ND	1.0	"	"	"	"	"	"	
1,2-Dibromo-3-chloropropane	ND	1.0	"	"	"	"	"	"	
1,2-Dibromoethane (EDB)	ND	1.0	"	"	"	"	"	"	
Dibromomethane	ND	1.0	"	"	"	"	"	"	
1,2-Dichlorobenzene	ND	1.0	"	"	"	"	"	"	
1,3-Dichlorobenzene	ND	1.0	"	"	"	"	"	"	
1,4-Dichlorobenzene	ND	1.0	"	"	"	"	"	"	
Dichlorodifluoromethane	ND	0.50	"	"	"	"	"	"	
1,1-Dichloroethane	**3.1**	1.0	"	"	"	"	"	"	
1,2-Dichloroethane	**0.81**	0.50	"	"	"	"	"	"	
1,1-Dichloroethene	**41**	1.0	"	"	"	"	"	"	
cis-1,2-Dichloroethene	**14**	1.0	"	"	"	"	"	"	
trans-1,2-Dichloroethene	**2.9**	1.0	"	"	"	"	"	"	
1,2-Dichloropropane	ND	1.0	"	"	"	"	"	"	

SunStar Laboratories, Inc.

The results in this report apply to the samples analyzed in accordance with the chain of custody document. This analytical report must be reproduced in its entirety.

Daniel Chavez, Project Manager

SunStar Laboratories, Inc.
Providing Quality Analytical Services Nationwide

25712 Commercentre Drive
Lake Forest, California 92630
949.297.5020 Phone
949.297.5027 Fax

Murex	Project: Cenco	
2640 Walnut Ave. Unit F	Project Number: 1003-001-300	**Reported:**
Tustin CA, 92780	Project Manager: Jeremy Squire	02/14/11 16:05

LL_MW710_020811_01

T110134-03 (Water)

Analyte	Result	Reporting Limit	Units	Dilution	Batch	Prepared	Analyzed	Method	Notes
SunStar Laboratories, Inc.									
Volatile Organic Compounds by EPA Method 8260B									
1,3-Dichloropropane	ND	1.0	ug/l	1	1020811	02/08/11	02/10/11	EPA 8260B	
2,2-Dichloropropane	ND	1.0	"	"	"	"	"	"	
1,1-Dichloropropene	ND	1.0	"	"	"	"	"	"	
cis-1,3-Dichloropropene	ND	0.50	"	"	"	"	"	"	
trans-1,3-Dichloropropene	ND	0.50	"	"	"	"	"	"	
Hexachlorobutadiene	ND	1.0	"	"	"	"	"	"	
Isopropylbenzene	ND	1.0	"	"	"	"	"	"	
p-Isopropyltoluene	ND	1.0	"	"	"	"	"	"	
Methylene chloride	ND	1.0	"	"	"	"	"	"	
Naphthalene	ND	1.0	"	"	"	"	"	"	
n-Propylbenzene	ND	1.0	"	"	"	"	"	"	
Styrene	ND	1.0	"	"	"	"	"	"	
1,1,2,2-Tetrachloroethane	ND	1.0	"	"	"	"	"	"	
1,1,1,2-Tetrachloroethane	ND	1.0	"	"	"	"	"	"	
Tetrachloroethene	**55**	1.0	"	"	"	"	"	"	
1,2,3-Trichlorobenzene	ND	1.0	"	"	"	"	"	"	
1,2,4-Trichlorobenzene	ND	1.0	"	"	"	"	"	"	
1,1,2-Trichloroethane	ND	1.0	"	"	"	"	"	"	
1,1,1-Trichloroethane	ND	1.0	"	"	"	"	"	"	
Trichloroethene	**93**	1.0	"	"	"	"	"	"	
Trichlorofluoromethane	**1.1**	1.0	"	"	"	"	"	"	
1,2,3-Trichloropropane	ND	1.0	"	"	"	"	"	"	
1,3,5-Trimethylbenzene	ND	1.0	"	"	"	"	"	"	
1,2,4-Trimethylbenzene	ND	1.0	"	"	"	"	"	"	
Vinyl chloride	**1.3**	1.0	"	"	"	"	"	"	
Benzene	**0.84**	0.50	"	"	"	"	"	"	
Toluene	ND	0.50	"	"	"	"	"	"	
Ethylbenzene	ND	0.50	"	"	"	"	"	"	
m,p-Xylene	ND	1.0	"	"	"	"	"	"	
o-Xylene	ND	0.50	"	"	"	"	"	"	
Tert-amyl methyl ether	ND	2.0	"	"	"	"	"	"	
Tert-butyl alcohol	ND	10	"	"	"	"	"	"	

SunStar Laboratories, Inc.

The results in this report apply to the samples analyzed in accordance with the chain of custody document. This analytical report must be reproduced in its entirety.

Daniel Chavez, Project Manager

SunStar Laboratories, Inc.
PROVIDING QUALITY ANALYTICAL SERVICES NATIONWIDE

25712 Commercentre Drive
Lake Forest, California 92630
949.297.5020 Phone
949.297.5027 Fax

Murex	Project: Cenco	
2640 Walnut Ave. Unit F	Project Number: 1003-001-300	**Reported:**
Tustin CA, 92780	Project Manager: Jeremy Squire	02/14/11 16:05

LL_MW710_020811_01

T110134-03 (Water)

Analyte	Result	Reporting Limit	Units	Dilution	Batch	Prepared	Analyzed	Method	Notes
SunStar Laboratories, Inc.									
Volatile Organic Compounds by EPA Method 8260B									
Di-isopropyl ether	ND	2.0	ug/l	1	1020811	02/08/11	02/10/11	EPA 8260B	
Ethyl tert-butyl ether	ND	2.0	"	"	"	"	"	"	
Methyl tert-butyl ether	ND	1.0	"	"	"	"	"	"	
1,1,2-trichloro-1,2,2-trifluoroethane (CFC 113)	**14**	5.0	"	"	"	"	"	"	
Surrogate 4-Bromofluorobenzene		*99.8 %*	*77.1-110*		"	"	"	"	
Surrogate Dibromofluoromethane		*92.4 %*	*66.3-111*		"	"	"	"	
Surrogate Toluene-d8		*98.0 %*	*84.7-109*		"	"	"	"	

SunStar Laboratories, Inc.

The results in this report apply to the samples analyzed in accordance with the chain of custody document. This analytical report must be reproduced in its entirety.

Daniel Chavez, Project Manager

SunStar Laboratories, Inc.
Providing Quality Analytical Services Nationwide

25712 Commercentre Drive
Lake Forest, California 92630
949.297.5020 Phone
949.297.5027 Fax

Murex	Project: Cenco	
2640 Walnut Ave. Unit F	Project Number: 1003-001-300	**Reported:**
Tustin CA, 92780	Project Manager: Jeremy Squire	02/14/11 16:05

LL_MW710_020811_02

T110134-04 (Water)

Analyte	Result	Reporting Limit	Units	Dilution	Batch	Prepared	Analyzed	Method	Notes
SunStar Laboratories, Inc.									
Purgeable Petroleum Hydrocarbons by EPA 8015C									
C6-C12 (GRO)	**110**	50	ug/l	1	1020812	02/08/11	02/09/11	EPA 8015C	
Surrogate 4-Bromofluorobenzene		*108 %*	*72.6-146*		"	"	"	"	
Volatile Organic Compounds by EPA Method 8260B									
Bromobenzene	ND	1.0	ug/l	1	1020811	02/08/11	02/10/11	EPA 8260B	
Bromochloromethane	ND	1.0	"	"	"	"	"	"	
Bromodichloromethane	ND	1.0	"	"	"	"	"	"	
Bromoform	ND	1.0	"	"	"	"	"	"	
Bromomethane	ND	1.0	"	"	"	"	"	"	
n-Butylbenzene	ND	1.0	"	"	"	"	"	"	
sec-Butylbenzene	ND	1.0	"	"	"	"	"	"	
tert-Butylbenzene	ND	1.0	"	"	"	"	"	"	
Carbon tetrachloride	ND	0.50	"	"	"	"	"	"	
Chlorobenzene	ND	1.0	"	"	"	"	"	"	
Chloroethane	ND	1.0	"	"	"	"	"	"	
Chloroform	ND	1.0	"	"	"	"	"	"	
Chloromethane	ND	1.0	"	"	"	"	"	"	
2-Chlorotoluene	ND	1.0	"	"	"	"	"	"	
4-Chlorotoluene	ND	1.0	"	"	"	"	"	"	
Dibromochloromethane	ND	1.0	"	"	"	"	"	"	
1,2-Dibromo-3-chloropropane	ND	1.0	"	"	"	"	"	"	
1,2-Dibromoethane (EDB)	ND	1.0	"	"	"	"	"	"	
Dibromomethane	ND	1.0	"	"	"	"	"	"	
1,2-Dichlorobenzene	ND	1.0	"	"	"	"	"	"	
1,3-Dichlorobenzene	ND	1.0	"	"	"	"	"	"	
1,4-Dichlorobenzene	ND	1.0	"	"	"	"	"	"	
Dichlorodifluoromethane	ND	0.50	"	"	"	"	"	"	
1,1-Dichloroethane	**3.1**	1.0	"	"	"	"	"	"	
1,2-Dichloroethane	ND	0.50	"	"	"	"	"	"	
1,1-Dichloroethene	**41**	1.0	"	"	"	"	"	"	
cis-1,2-Dichloroethene	**14**	1.0	"	"	"	"	"	"	
trans-1,2-Dichloroethene	**2.9**	1.0	"	"	"	"	"	"	
1,2-Dichloropropane	ND	1.0	"	"	"	"	"	"	

SunStar Laboratories, Inc.

The results in this report apply to the samples analyzed in accordance with the chain of custody document. This analytical report must be reproduced in its entirety.

Daniel Chavez, Project Manager

SunStar Laboratories, Inc.
Providing Quality Analytical Services Nationwide

25712 Commercentre Drive
Lake Forest, California 92630
949.297.5020 Phone
949.297.5027 Fax

Murex	Project: Cenco	
2640 Walnut Ave. Unit F	Project Number: 1003-001-300	**Reported:**
Tustin CA, 92780	Project Manager: Jeremy Squire	02/14/11 16:05

LL_MW710_020811_02

T110134-04 (Water)

SunStar Laboratories, Inc.

Volatile Organic Compounds by EPA Method 8260B

Analyte	Result	Reporting Limit	Units	Dilution	Batch	Prepared	Analyzed	Method	Notes
1,3-Dichloropropane	ND	1.0	ug/l	1	1020811	02/08/11	02/10/11	EPA 8260B	
2,2-Dichloropropane	ND	1.0	"	"	"	"	"	"	
1,1-Dichloropropene	ND	1.0	"	"	"	"	"	"	
cis-1,3-Dichloropropene	ND	0.50	"	"	"	"	"	"	
trans-1,3-Dichloropropene	ND	0.50	"	"	"	"	"	"	
Hexachlorobutadiene	ND	1.0	"	"	"	"	"	"	
Isopropylbenzene	ND	1.0	"	"	"	"	"	"	
p-Isopropyltoluene	ND	1.0	"	"	"	"	"	"	
Methylene chloride	ND	1.0	"	"	"	"	"	"	
Naphthalene	ND	1.0	"	"	"	"	"	"	
n-Propylbenzene	ND	1.0	"	"	"	"	"	"	
Styrene	ND	1.0	"	"	"	"	"	"	
1,1,2,2-Tetrachloroethane	ND	1.0	"	"	"	"	"	"	
1,1,1,2-Tetrachloroethane	ND	1.0	"	"	"	"	"	"	
Tetrachloroethene	**54**	1.0	"	"	"	"	"	"	
1,2,3-Trichlorobenzene	ND	1.0	"	"	"	"	"	"	
1,2,4-Trichlorobenzene	ND	1.0	"	"	"	"	"	"	
1,1,2-Trichloroethane	ND	1.0	"	"	"	"	"	"	
1,1,1-Trichloroethane	ND	1.0	"	"	"	"	"	"	
Trichloroethene	**89**	1.0	"	"	"	"	"	"	
Trichlorofluoromethane	**1.1**	1.0	"	"	"	"	"	"	
1,2,3-Trichloropropane	ND	1.0	"	"	"	"	"	"	
1,3,5-Trimethylbenzene	ND	1.0	"	"	"	"	"	"	
1,2,4-Trimethylbenzene	ND	1.0	"	"	"	"	"	"	
Vinyl chloride	**1.2**	1.0	"	"	"	"	"	"	
Benzene	**0.75**	0.50	"	"	"	"	"	"	
Toluene	ND	0.50	"	"	"	"	"	"	
Ethylbenzene	ND	0.50	"	"	"	"	"	"	
m,p-Xylene	ND	1.0	"	"	"	"	"	"	
o-Xylene	ND	0.50	"	"	"	"	"	"	
Tert-amyl methyl ether	ND	2.0	"	"	"	"	"	"	
Tert-butyl alcohol	ND	10	"	"	"	"	"	"	

SunStar Laboratories, Inc.

The results in this report apply to the samples analyzed in accordance with the chain of custody document. This analytical report must be reproduced in its entirety.

Daniel Chavez, Project Manager

SunStar Laboratories, Inc.
PROVIDING QUALITY ANALYTICAL SERVICES NATIONWIDE

25712 Commercentre Drive
Lake Forest, California 92630
949.297.5020 Phone
949.297.5027 Fax

Murex	Project: Cenco	
2640 Walnut Ave. Unit F	Project Number: 1003-001-300	**Reported:**
Tustin CA, 92780	Project Manager: Jeremy Squire	02/14/11 16:05

LL_MW710_020811_02

T110134-04 (Water)

Analyte	Result	Reporting Limit	Units	Dilution	Batch	Prepared	Analyzed	Method	Notes
SunStar Laboratories, Inc.									
Volatile Organic Compounds by EPA Method 8260B									
Di-isopropyl ether	ND	2.0	ug/l	1	1020811	02/08/11	02/10/11	EPA 8260B	
Ethyl tert-butyl ether	ND	2.0	"	"	"	"	"	"	
Methyl tert-butyl ether	ND	1.0	"	"	"	"	"	"	
1,1,2-trichloro-1,2,2-trifluoroethane (CFC 113)	**14**	5.0	"	"	"	"	"	"	
Surrogate 4-Bromofluorobenzene		*98.4 %*	*77.1-110*		"	"	"	"	
Surrogate Dibromofluoromethane		*89.0 %*	*66.3-111*		"	"	"	"	
Surrogate Toluene-d8		*98.2 %*	*84.7-109*		"	"	"	"	

SunStar Laboratories, Inc.

The results in this report apply to the samples analyzed in accordance with the chain of custody document. This analytical report must be reproduced in its entirety.

Daniel Chavez, Project Manager

SunStar Laboratories, Inc.
Providing Quality Analytical Services Nationwide

25712 Commercentre Drive
Lake Forest, California 92630
949.297.5020 Phone
949.297.5027 Fax

Murex	Project: Cenco	
2640 Walnut Ave. Unit F	Project Number: 1003-001-300	**Reported:**
Tustin CA, 92780	Project Manager: Jeremy Squire	02/14/11 16:05

LL_MW711_020811

T110134-05 (Water)

Analyte	Result	Reporting Limit	Units	Dilution	Batch	Prepared	Analyzed	Method	Notes
SunStar Laboratories, Inc.									
Purgeable Petroleum Hydrocarbons by EPA 8015C									
C6-C12 (GRO)	**11000**	50	ug/l	1	1020812	02/08/11	02/09/11	EPA 8015C	
Surrogate 4-Bromofluorobenzene		*97.6 %*	*72.6-146*		"	"	"	"	
Volatile Organic Compounds by EPA Method 8260B									
Bromobenzene	ND	1.0	ug/l	1	1020811	02/08/11	02/10/11	EPA 8260B	
Bromochloromethane	ND	1.0	"	"	"	"	"	"	
Bromodichloromethane	ND	1.0	"	"	"	"	"	"	
Bromoform	ND	1.0	"	"	"	"	"	"	
Bromomethane	ND	1.0	"	"	"	"	"	"	
n-Butylbenzene	**19**	1.0	"	"	"	"	"	"	
sec-Butylbenzene	**18**	1.0	"	"	"	"	"	"	
tert-Butylbenzene	**2.8**	1.0	"	"	"	"	"	"	
Carbon tetrachloride	ND	0.50	"	"	"	"	"	"	
Chlorobenzene	ND	1.0	"	"	"	"	"	"	
Chloroethane	ND	1.0	"	"	"	"	"	"	
Chloroform	ND	1.0	"	"	"	"	"	"	
Chloromethane	ND	1.0	"	"	"	"	"	"	
2-Chlorotoluene	ND	1.0	"	"	"	"	"	"	
4-Chlorotoluene	ND	1.0	"	"	"	"	"	"	
Dibromochloromethane	ND	1.0	"	"	"	"	"	"	
1,2-Dibromo-3-chloropropane	ND	1.0	"	"	"	"	"	"	
1,2-Dibromoethane (EDB)	ND	1.0	"	"	"	"	"	"	
Dibromomethane	ND	1.0	"	"	"	"	"	"	
1,2-Dichlorobenzene	ND	1.0	"	"	"	"	"	"	
1,3-Dichlorobenzene	ND	1.0	"	"	"	"	"	"	
1,4-Dichlorobenzene	ND	1.0	"	"	"	"	"	"	
Dichlorodifluoromethane	ND	0.50	"	"	"	"	"	"	
1,1-Dichloroethane	ND	1.0	"	"	"	"	"	"	
1,2-Dichloroethane	ND	0.50	"	"	"	"	"	"	
1,1-Dichloroethene	ND	1.0	"	"	"	"	"	"	
cis-1,2-Dichloroethene	**4.5**	1.0	"	"	"	"	"	"	
trans-1,2-Dichloroethene	ND	1.0	"	"	"	"	"	"	
1,2-Dichloropropane	ND	1.0	"	"	"	"	"	"	

SunStar Laboratories, Inc.

The results in this report apply to the samples analyzed in accordance with the chain of custody document. This analytical report must be reproduced in its entirety.

Daniel Chavez, Project Manager

SunStar Laboratories, Inc.
Providing Quality Analytical Services Nationwide

25712 Commercentre Drive
Lake Forest, California 92630
949.297.5020 Phone
949.297.5027 Fax

Murex	Project: Cenco	
2640 Walnut Ave. Unit F	Project Number: 1003-001-300	**Reported:**
Tustin CA, 92780	Project Manager: Jeremy Squire	02/14/11 16:05

LL_MW711_020811

T110134-05 (Water)

SunStar Laboratories, Inc.

Volatile Organic Compounds by EPA Method 8260B

Analyte	Result	Reporting Limit	Units	Dilution	Batch	Prepared	Analyzed	Method	Notes
1,3-Dichloropropane	ND	1.0	ug/l	1	1020811	02/08/11	02/10/11	EPA 8260B	
2,2-Dichloropropane	ND	1.0	"	"	"	"	"	"	
1,1-Dichloropropene	ND	1.0	"	"	"	"	"	"	
cis-1,3-Dichloropropene	ND	0.50	"	"	"	"	"	"	
trans-1,3-Dichloropropene	ND	0.50	"	"	"	"	"	"	
Hexachlorobutadiene	ND	1.0	"	"	"	"	"	"	
Isopropylbenzene	**94**	1.0	"	"	"	"	"	"	
p-Isopropyltoluene	**2.9**	1.0	"	"	"	"	"	"	
Methylene chloride	ND	1.0	"	"	"	"	"	"	
Naphthalene	**260**	1.0	"	"	"	"	"	"	
n-Propylbenzene	**130**	1.0	"	"	"	"	"	"	
Styrene	ND	1.0	"	"	"	"	"	"	
1,1,2,2-Tetrachloroethane	ND	1.0	"	"	"	"	"	"	
1,1,1,2-Tetrachloroethane	ND	1.0	"	"	"	"	"	"	
Tetrachloroethene	ND	1.0	"	"	"	"	"	"	
1,2,3-Trichlorobenzene	ND	1.0	"	"	"	"	"	"	
1,2,4-Trichlorobenzene	ND	1.0	"	"	"	"	"	"	
1,1,2-Trichloroethane	ND	1.0	"	"	"	"	"	"	
1,1,1-Trichloroethane	ND	1.0	"	"	"	"	"	"	
Trichloroethene	**8.4**	1.0	"	"	"	"	"	"	
Trichlorofluoromethane	ND	1.0	"	"	"	"	"	"	
1,2,3-Trichloropropane	ND	1.0	"	"	"	"	"	"	
1,3,5-Trimethylbenzene	**110**	1.0	"	"	"	"	"	"	
1,2,4-Trimethylbenzene	**180**	1.0	"	"	"	"	"	"	
Vinyl chloride	**7.5**	1.0	"	"	"	"	"	"	
Benzene	**520**	0.50	"	"	"	"	"	"	
Toluene	**440**	0.50	"	"	"	"	"	"	
Ethylbenzene	**120**	0.50	"	"	"	"	"	"	
m,p-Xylene	**380**	1.0	"	"	"	"	"	"	
o-Xylene	**250**	0.50	"	"	"	"	"	"	
Tert-amyl methyl ether	ND	2.0	"	"	"	"	"	"	
Tert-butyl alcohol	ND	10	"	"	"	"	"	"	
Di-isopropyl ether	ND	2.0	"	"	"	"	"	"	

SunStar Laboratories, Inc.

The results in this report apply to the samples analyzed in accordance with the chain of custody document. This analytical report must be reproduced in its entirety.

Daniel Chavez, Project Manager

SunStar Laboratories, Inc.
PROVIDING QUALITY ANALYTICAL SERVICES NATIONWIDE

25712 Commercentre Drive
Lake Forest, California 92630
949.297.5020 Phone
949.297.5027 Fax

Murex	Project: Cenco	
2640 Walnut Ave. Unit F	Project Number: 1003-001-300	**Reported:**
Tustin CA, 92780	Project Manager: Jeremy Squire	02/14/11 16:05

LL_MW711_020811

T110134-05 (Water)

Analyte	Result	Reporting Limit	Units	Dilution	Batch	Prepared	Analyzed	Method	Notes
SunStar Laboratories, Inc.									
Volatile Organic Compounds by EPA Method 8260B									
Ethyl tert-butyl ether	ND	2.0	ug/l	1	1020811	02/08/11	02/10/11	EPA 8260B	
Methyl tert-butyl ether	**11**	1.0	"	"	"	"	"	"	
1,1,2-trichloro-1,2,2-trifluoroethane (CFC 113)	ND	5.0	"	"	"	"	"	"	
Surrogate 4-Bromofluorobenzene		*105 %*	*77.1-110*		"	"	"	"	
Surrogate Dibromofluoromethane		*88.8 %*	*66.3-111*		"	"	"	"	
Surrogate Toluene-d8		*96.2 %*	*84.7-109*		"	"	"	"	

SunStar Laboratories, Inc.

The results in this report apply to the samples analyzed in accordance with the chain of custody document. This analytical report must be reproduced in its entirety.

Daniel Chavez, Project Manager

SunStar Laboratories, Inc.
Providing Quality Analytical Services Nationwide

25712 Commercentre Drive
Lake Forest, California 92630
949.297.5020 Phone
949.297.5027 Fax

Murex	Project: Cenco	
2640 Walnut Ave. Unit F	Project Number: 1003-001-300	**Reported:**
Tustin CA, 92780	Project Manager: Jeremy Squire	02/14/11 16:05

TB_020811

T110134-06 (Water)

Analyte	Result	Reporting Limit	Units	Dilution	Batch	Prepared	Analyzed	Method	Notes
SunStar Laboratories, Inc.									
Volatile Organic Compounds by EPA Method 8260B									
Bromobenzene	ND	1.0	ug/l	1	1020811	02/08/11	02/10/11	EPA 8260B	
Bromochloromethane	ND	1.0	"	"	"	"	"	"	
Bromodichloromethane	ND	1.0	"	"	"	"	"	"	
Bromoform	ND	1.0	"	"	"	"	"	"	
Bromomethane	ND	1.0	"	"	"	"	"	"	
n-Butylbenzene	ND	1.0	"	"	"	"	"	"	
sec-Butylbenzene	ND	1.0	"	"	"	"	"	"	
tert-Butylbenzene	ND	1.0	"	"	"	"	"	"	
Carbon tetrachloride	ND	0.50	"	"	"	"	"	"	
Chlorobenzene	ND	1.0	"	"	"	"	"	"	
Chloroethane	ND	1.0	"	"	"	"	"	"	
Chloroform	ND	1.0	"	"	"	"	"	"	
Chloromethane	ND	1.0	"	"	"	"	"	"	
2-Chlorotoluene	ND	1.0	"	"	"	"	"	"	
4-Chlorotoluene	ND	1.0	"	"	"	"	"	"	
Dibromochloromethane	ND	1.0	"	"	"	"	"	"	
1,2-Dibromo-3-chloropropane	ND	1.0	"	"	"	"	"	"	
1,2-Dibromoethane (EDB)	ND	1.0	"	"	"	"	"	"	
Dibromomethane	ND	1.0	"	"	"	"	"	"	
1,2-Dichlorobenzene	ND	1.0	"	"	"	"	"	"	
1,3-Dichlorobenzene	ND	1.0	"	"	"	"	"	"	
1,4-Dichlorobenzene	ND	1.0	"	"	"	"	"	"	
Dichlorodifluoromethane	ND	0.50	"	"	"	"	"	"	
1,1-Dichloroethane	ND	1.0	"	"	"	"	"	"	
1,2-Dichloroethane	ND	0.50	"	"	"	"	"	"	
1,1-Dichloroethene	ND	1.0	"	"	"	"	"	"	
cis-1,2-Dichloroethene	ND	1.0	"	"	"	"	"	"	
trans-1,2-Dichloroethene	ND	1.0	"	"	"	"	"	"	
1,2-Dichloropropane	ND	1.0	"	"	"	"	"	"	
1,3-Dichloropropane	ND	1.0	"	"	"	"	"	"	
2,2-Dichloropropane	ND	1.0	"	"	"	"	"	"	
1,1-Dichloropropene	ND	1.0	"	"	"	"	"	"	

SunStar Laboratories, Inc.

The results in this report apply to the samples analyzed in accordance with the chain of custody document. This analytical report must be reproduced in its entirety.

Daniel Chavez, Project Manager

SunStar Laboratories, Inc.
Providing Quality Analytical Services Nationwide

25712 Commercentre Drive
Lake Forest, California 92630
949.297.5020 Phone
949.297.5027 Fax

Murex	Project: Cenco	
2640 Walnut Ave. Unit F	Project Number: 1003-001-300	**Reported:**
Tustin CA, 92780	Project Manager: Jeremy Squire	02/14/11 16:05

TB_020811

T110134-06 (Water)

Analyte	Result	Reporting Limit	Units	Dilution	Batch	Prepared	Analyzed	Method	Notes
SunStar Laboratories, Inc.									
Volatile Organic Compounds by EPA Method 8260B									
cis-1,3-Dichloropropene	ND	0.50	ug/l	1	1020811	02/08/11	02/10/11	EPA 8260B	
trans-1,3-Dichloropropene	ND	0.50	"	"	"	"	"	"	
Hexachlorobutadiene	ND	1.0	"	"	"	"	"	"	
Isopropylbenzene	ND	1.0	"	"	"	"	"	"	
p-Isopropyltoluene	ND	1.0	"	"	"	"	"	"	
Methylene chloride	ND	1.0	"	"	"	"	"	"	
Naphthalene	ND	1.0	"	"	"	"	"	"	
n-Propylbenzene	ND	1.0	"	"	"	"	"	"	
Styrene	ND	1.0	"	"	"	"	"	"	
1,1,2,2-Tetrachloroethane	ND	1.0	"	"	"	"	"	"	
1,1,1,2-Tetrachloroethane	ND	1.0	"	"	"	"	"	"	
Tetrachloroethene	ND	1.0	"	"	"	"	"	"	
1,2,3-Trichlorobenzene	ND	1.0	"	"	"	"	"	"	
1,2,4-Trichlorobenzene	ND	1.0	"	"	"	"	"	"	
1,1,2-Trichloroethane	ND	1.0	"	"	"	"	"	"	
1,1,1-Trichloroethane	ND	1.0	"	"	"	"	"	"	
Trichloroethene	ND	1.0	"	"	"	"	"	"	
Trichlorofluoromethane	ND	1.0	"	"	"	"	"	"	
1,2,3-Trichloropropane	ND	1.0	"	"	"	"	"	"	
1,3,5-Trimethylbenzene	ND	1.0	"	"	"	"	"	"	
1,2,4-Trimethylbenzene	ND	1.0	"	"	"	"	"	"	
Vinyl chloride	ND	1.0	"	"	"	"	"	"	
Benzene	ND	0.50	"	"	"	"	"	"	
Toluene	ND	0.50	"	"	"	"	"	"	
Ethylbenzene	ND	0.50	"	"	"	"	"	"	
m,p-Xylene	ND	1.0	"	"	"	"	"	"	
o-Xylene	ND	0.50	"	"	"	"	"	"	
Tert-amyl methyl ether	ND	2.0	"	"	"	"	"	"	
Tert-butyl alcohol	ND	10	"	"	"	"	"	"	
Di-isopropyl ether	ND	2.0	"	"	"	"	"	"	
Ethyl tert-butyl ether	ND	2.0	"	"	"	"	"	"	
Methyl tert-butyl ether	ND	1.0	"	"	"	"	"	"	

SunStar Laboratories, Inc.

The results in this report apply to the samples analyzed in accordance with the chain of custody document. This analytical report must be reproduced in its entirety.

Daniel Chavez, Project Manager

SunStar Laboratories, Inc.
PROVIDING QUALITY ANALYTICAL SERVICES NATIONWIDE

25712 Commercentre Drive
Lake Forest, California 92630
949.297.5020 Phone
949.297.5027 Fax

Murex	Project: Cenco	
2640 Walnut Ave. Unit F	Project Number: 1003-001-300	**Reported:**
Tustin CA, 92780	Project Manager: Jeremy Squire	02/14/11 16:05

TB_020811

T110134-06 (Water)

Analyte	Result	Reporting Limit	Units	Dilution	Batch	Prepared	Analyzed	Method	Notes
SunStar Laboratories, Inc.									
Volatile Organic Compounds by EPA Method 8260B									
1,1,2-trichloro-1,2,2-trifluoroethane (CFC 113)	ND	5.0	ug/l	1	1020811	02/08/11	02/10/11	EPA 8260B	
Surrogate 4-Bromofluorobenzene		*97.1 %*	*77.1-110*		"	"	"	"	
Surrogate Dibromofluoromethane		*90.6 %*	*66.3-111*		"	"	"	"	
Surrogate Toluene-d8		*96.1 %*	*84.7-109*		"	"	"	"	

SunStar Laboratories, Inc.

The results in this report apply to the samples analyzed in accordance with the chain of custody document. This analytical report must be reproduced in its entirety.

Daniel Chavez, Project Manager

SunStar Laboratories, Inc.
PROVIDING QUALITY ANALYTICAL SERVICES NATIONWIDE

25712 Commercentre Drive
Lake Forest, California 92630
949.297.5020 Phone
949.297.5027 Fax

Murex	Project: Cenco	
2640 Walnut Ave. Unit F	Project Number: 1003-001-300	**Reported:**
Tustin CA, 92780	Project Manager: Jeremy Squire	02/14/11 16:05

Purgeable Petroleum Hydrocarbons by EPA 8015C - Quality Control

SunStar Laboratories, Inc.

Analyte	Result	Reporting Limit	Units	Spike Level	Source Result	%REC	%REC Limits	RPD	RPD Limit	Notes
Batch 1020812 - EPA 5030 GC										
Blank (1020812-BLK1)				Prepared: 02/08/11	Analyzed: 02/09/11					
C6-C12 (GRO)	ND	50	ug/l							
Surrogate 4-Bromofluorobenzene	*222*		*"*	*200*		*111*	*72.6-146*			
LCS (1020812-BS1)				Prepared: 02/08/11	Analyzed: 02/09/11					
C6-C12 (GRO)	4550	50	ug/l	5500		82.8	75-125			
Surrogate 4-Bromofluorobenzene	*219*		*"*	*200*		*109*	*72.6-146*			
LCS Dup (1020812-BSD1)				Prepared: 02/08/11	Analyzed: 02/09/11					
C6-C12 (GRO)	4770	50	ug/l	5500		86.8	75-125	4.78	20	
Surrogate 4-Bromofluorobenzene	*208*		*"*	*200*		*104*	*72.6-146*			

SunStar Laboratories, Inc.

The results in this report apply to the samples analyzed in accordance with the chain of custody document. This analytical report must be reproduced in its entirety.

Daniel Chavez, Project Manager

SunStar Laboratories, Inc.
Providing Quality Analytical Services Nationwide

25712 Commercentre Drive
Lake Forest, California 92630
949.297.5020 Phone
949.297.5027 Fax

Murex	Project: Cenco	
2640 Walnut Ave. Unit F	Project Number: 1003-001-300	**Reported:**
Tustin CA, 92780	Project Manager: Jeremy Squire	02/14/11 16:05

Volatile Organic Compounds by EPA Method 8260B - Quality Control

SunStar Laboratories, Inc.

Analyte	Result	Reporting Limit	Units	Spike Level	Source Result	%REC	%REC Limits	RPD	RPD Limit	Notes
Batch 1020811 - EPA 5030 GCMS										
Blank (1020811-BLK1)				Prepared: 02/08/11 Analyzed: 02/10/11						
Bromobenzene	ND	1.0	ug/l							
Bromochloromethane	ND	1.0	"							
Bromodichloromethane	ND	1.0	"							
Bromoform	ND	1.0	"							
Bromomethane	ND	1.0	"							
n-Butylbenzene	ND	1.0	"							
sec-Butylbenzene	ND	1.0	"							
tert-Butylbenzene	ND	1.0	"							
Carbon tetrachloride	ND	0.50	"							
Chlorobenzene	ND	1.0	"							
Chloroethane	ND	1.0	"							
Chloroform	ND	1.0	"							
Chloromethane	ND	1.0	"							
2-Chlorotoluene	ND	1.0	"							
4-Chlorotoluene	ND	1.0	"							
Dibromochloromethane	ND	1.0	"							
1,2-Dibromo-3-chloropropane	ND	1.0	"							
1,2-Dibromoethane (EDB)	ND	1.0	"							
Dibromomethane	ND	1.0	"							
1,2-Dichlorobenzene	ND	1.0	"							
1,3-Dichlorobenzene	ND	1.0	"							
1,4-Dichlorobenzene	ND	1.0	"							
Dichlorodifluoromethane	ND	0.50	"							
1,1-Dichloroethane	ND	1.0	"							
1,2-Dichloroethane	ND	0.50	"							
1,1-Dichloroethene	ND	1.0	"							
cis-1,2-Dichloroethene	ND	1.0	"							
trans-1,2-Dichloroethene	ND	1.0	"							
1,2-Dichloropropane	ND	1.0	"							
1,3-Dichloropropane	ND	1.0	"							
2,2-Dichloropropane	ND	1.0	"							
1,1-Dichloropropene	ND	1.0	"							
cis-1,3-Dichloropropene	ND	0.50	"							
trans-1,3-Dichloropropene	ND	0.50	"							
Hexachlorobutadiene	ND	1.0	"							
Isopropylbenzene	ND	1.0	"							

SunStar Laboratories, Inc.

The results in this report apply to the samples analyzed in accordance with the chain of custody document. This analytical report must be reproduced in its entirety.

Daniel Chavez, Project Manager

SunStar Laboratories, Inc.
Providing Quality Analytical Services Nationwide

25712 Commercentre Drive
Lake Forest, California 92630
949.297.5020 Phone
949.297.5027 Fax

Murex	Project: Cenco	
2640 Walnut Ave. Unit F	Project Number: 1003-001-300	**Reported:**
Tustin CA, 92780	Project Manager: Jeremy Squire	02/14/11 16:05

Volatile Organic Compounds by EPA Method 8260B - Quality Control

SunStar Laboratories, Inc.

Analyte	Result	Reporting Limit	Units	Spike Level	Source Result	%REC	%REC Limits	RPD	RPD Limit	Notes
Batch 1020811 - EPA 5030 GCMS										
Blank (1020811-BLK1)				Prepared: 02/08/11 Analyzed: 02/10/11						
p-Isopropyltoluene	ND	1.0	ug/l							
Methylene chloride	ND	1.0	"							
Naphthalene	ND	1.0	"							
n-Propylbenzene	ND	1.0	"							
Styrene	ND	1.0	"							
1,1,2,2-Tetrachloroethane	ND	1.0	"							
1,1,1,2-Tetrachloroethane	ND	1.0	"							
Tetrachloroethene	ND	1.0	"							
1,2,3-Trichlorobenzene	ND	1.0	"							
1,2,4-Trichlorobenzene	ND	1.0	"							
1,1,2-Trichloroethane	ND	1.0	"							
1,1,1-Trichloroethane	ND	1.0	"							
Trichloroethene	ND	1.0	"							
Trichlorofluoromethane	ND	1.0	"							
1,2,3-Trichloropropane	ND	1.0	"							
1,3,5-Trimethylbenzene	ND	1.0	"							
1,2,4-Trimethylbenzene	ND	1.0	"							
Vinyl chloride	ND	1.0	"							
Benzene	ND	0.50	"							
Toluene	ND	0.50	"							
Ethylbenzene	ND	0.50	"							
m,p-Xylene	ND	1.0	"							
o-Xylene	ND	0.50	"							
Tert-amyl methyl ether	ND	2.0	"							
Tert-butyl alcohol	ND	10	"							
Di-isopropyl ether	ND	2.0	"							
Ethyl tert-butyl ether	ND	2.0	"							
Methyl tert-butyl ether	ND	1.0	"							
1,1,2-trichloro-1,2,2-trifluoroethane (CFC 113)	ND	5.0	"							
Surrogate 4-Bromofluorobenzene	*7.85*		*"*	*8.00*		*98.1*	*77.1-110*			
Surrogate Dibromofluoromethane	*6.85*		*"*	*8.00*		*85.6*	*66.3-111*			
Surrogate Toluene-d8	*7.54*		*"*	*8.00*		*94.2*	*84.7-109*			

SunStar Laboratories, Inc.

The results in this report apply to the samples analyzed in accordance with the chain of custody document. This analytical report must be reproduced in its entirety.

Daniel Chavez, Project Manager

SunStar Laboratories, Inc.
Providing Quality Analytical Services Nationwide

25712 Commercentre Drive
Lake Forest, California 92630
949.297.5020 Phone
949.297.5027 Fax

Murex	Project: Cenco	
2640 Walnut Ave. Unit F	Project Number: 1003-001-300	**Reported:**
Tustin CA, 92780	Project Manager: Jeremy Squire	02/14/11 16:05

Volatile Organic Compounds by EPA Method 8260B - Quality Control

SunStar Laboratories, Inc.

Analyte	Result	Reporting Limit	Units	Spike Level	Source Result	%REC	%REC Limits	RPD	RPD Limit	Notes
Batch 1020811 - EPA 5030 GCMS										
LCS (1020811-BS1)				Prepared: 02/08/11	Analyzed: 02/10/11					
Chlorobenzene	22.4	1.0	ug/l	20.0		112	75-125			
1,1-Dichloroethene	20 3	1.0	"	20.0		101	75-125			
Trichloroethene	16 9	1.0	"	20.0		84.4	75-125			
Benzene	21.7	0.50	"	20.0		108	75-125			
Toluene	24 3	0.50	"	20.0		122	75-125			
Surrogate 4-Bromofluorobenzene	*8.40*		*"*	*8.00*		*105*	*77.1-110*			
Surrogate Dibromofluoromethane	*6.61*		*"*	*8.00*		*82.6*	*66.3-111*			
Surrogate Toluene-d8	*8.61*		*"*	*8.00*		*108*	*84.7-109*			
LCS Dup (1020811-BSD1)				Prepared: 02/08/11	Analyzed: 02/10/11					
Chlorobenzene	24 2	1.0	ug/l	20.0		121	75-125	7.75	20	
1,1-Dichloroethene	24 3	1.0	"	20.0		122	75-125	18.0	20	
Trichloroethene	18.4	1.0	"	20.0		92.0	75-125	8.62	20	
Benzene	22.6	0.50	"	20.0		113	75-125	4.29	20	
Toluene	22.4	0.50	"	20.0		112	75-125	8.22	20	
Surrogate 4-Bromofluorobenzene	*7.95*		*"*	*8.00*		*99.4*	*77.1-110*			
Surrogate Dibromofluoromethane	*7.20*		*"*	*8.00*		*90.0*	*66.3-111*			
Surrogate Toluene-d8	*8.03*		*"*	*8.00*		*100*	*84.7-109*			

SunStar Laboratories, Inc.

The results in this report apply to the samples analyzed in accordance with the chain of custody document. This analytical report must be reproduced in its entirety.

Daniel Chavez, Project Manager

SunStar Laboratories, Inc.
PROVIDING QUALITY ANALYTICAL SERVICES NATIONWIDE

25712 Commercentre Drive
Lake Forest, California 92630
949.297.5020 Phone
949.297.5027 Fax

Murex	Project: Cenco	
2640 Walnut Ave. Unit F	Project Number: 1003-001-300	**Reported:**
Tustin CA, 92780	Project Manager: Jeremy Squire	02/14/11 16:05

Notes and Definitions

DET	Analyte DETECTED
ND	Analyte NOT DETECTED at or above the reporting limit
NR	Not Reported
dry	Sample results reported on a dry weight basis
RPD	Relative Percent Difference

SunStar Laboratories, Inc.

The results in this report apply to the samples analyzed in accordance with the chain of custody document. This analytical report must be reproduced in its entirety.

Daniel Chavez, Project Manager

SunStar Laboratories, Inc.
25712 Commercentre Dr
Lake Forest, CA 92630
949-297-5020

Chain of Custody Record

Client: Murex Environmental, Inc.
Address: 2640 Walnut Ave, Unit F
Phone: (714) 508-0800 Fax: (714) 508-0880
Project Manager: Jeremy Squire (714) 604-5836

Date: 2·8·2011 Page: 1 Of 1
Project Name: CENCO
Collector: F. Sosic Client Project #: 1003-001-300
Batch #: T110134 EDF #:

Sample ID	Date Sampled	Time	Sample Type	8260 (VOCs NO OXY)	8260 + OXY	1,4-Dioxane	8270 Semi-Volatiles (PAHs, etc)	8021 BTEX	8015M (TPH gasoline)	8015M (TPH diesel)	Hexavalent Chromium (7199)	6010/7000 Title 22 Metals	PCBs				Total # of containers	Comments/Preservative	Laboratory ID #
LL_W4_020811	2·8·2011	0900	GW		X				X								6		01
LL_W10_020811		1000	GW		X				X								6		02
LL_MW710_020811_01		1145	GW		X				X								6		03
LL_MW710_020811_02		1215	GW		X				X								6		04
LL_MW711_020811		1230	GW		X				X								6		05
TB_020811			Water		X												2		06

Relinquished by: (signature)	Date / Time	Received by: (signat	Date / Time
[signature]	2/8/11 13:28	[signature]	2/8/11 1328
Relinquished by: (signature)	Date / Time	Received by: (signat	Date / Time
Relinquished by: (signature)	Date / Time	Received by: (signat	Date / Time

Total # of containers	32
Chain of Custody seals	N
Seals intact? Y/N/NA	N/A
Received good condition/cold	Y
Turn around time:	

Notes
8.2°

Sample disposal Instructions: Disposal @ $2.00 each ____ Return to client ____ Pickup ____

SunStar Laboratories, Inc.
PROVIDING QUALITY ANALYTICAL SERVICES NATIONWIDE

SAMPLE RECEIVING REVIEW SHEET

BATCH # T110134

Client Name: MUREX

Project: CENCO

Received by: DAN

Date/Time Received: 2/8/11 1328

Delivered by : ☐ Client ☒ SunStar Courier ☐ GSO ☐ FedEx ☐ Other _____

Total number of coolers received 0

Temp criteria = 6°C > 0°C (no frozen containers)

Temperature: cooler #1 8.4 °C +/- the CF (- 0.2°C) = 8.2 °C corrected temperature

cooler #2 _____ °C +/- the CF (- 0.2°C) = _____ °C corrected temperature

cooler #3 _____ °C +/- the CF (- 0.2°C) = _____ °C corrected temperature

Samples outside temp. but received on ice, w/in 6 hours of final sampling.	☒ Yes	☐ No*	☐ N/A
Custody Seals Intact on Cooler/Sample	☐ Yes	☐ No*	☒ N/A
Sample Containers Intact	☒ Yes	☐ No*	
Sample labels match COC ID's	☒ Yes	☐ No*	
Total number of containers received match COC	☒ Yes	☐ No*	
Proper containers received for analyses requested on COC	☒ Yes	☐ No*	
Proper preservative indicated on COC/containers for analyses requested	☒ Yes	☐ No*	☐ N/A

Complete shipment received in good condition with correct temperatures, containers, labels, volumes preservatives and within method specified holding times. ☒ **Yes** ☐ **No***

* Complete Non-Conformance Receiving Sheet if checked

Cooler/Sample Review - Initials and date BC 2/8/11

Comments:

SunStar Laboratories, Inc.
PROVIDING QUALITY ANALYTICAL SERVICES NATIONWIDE

25712 Commercentre Drive
Lake Forest, California 92630
949.297.5020 Phone
949.297.5027 Fax

14 February 2011

Jeremy Squire
Murex
2640 Walnut Ave. Unit F
Tustin, CA 92780

RE: Cenco

Enclosed are the results of analyses for samples received by the laboratory on 02/09/11 14:37. If you have any questions concerning this report, please feel free to contact me.

Sincerely,

Daniel Chavez
Project Manager

SunStar Laboratories, Inc.
PROVIDING QUALITY ANALYTICAL SERVICES NATIONWIDE

25712 Commercentre Drive
Lake Forest, California 92630
949.297.5020 Phone
949.297.5027 Fax

Murex	Project: Cenco	
2640 Walnut Ave. Unit F	Project Number: 1003-001-300	**Reported:**
Tustin CA, 92780	Project Manager: Jeremy Squire	02/14/11 16:08

ANALYTICAL REPORT FOR SAMPLES

Sample ID	Laboratory ID	Matrix	Date Sampled	Date Received
LL_MW704_020911_01	T110143-01	Water	02/09/11 09:30	02/09/11 14:37
LL_MW704_020911_02	T110143-02	Water	02/09/11 10:00	02/09/11 14:37
LL_MW712_020911	T110143-03	Water	02/09/11 12:45	02/09/11 14:37
LL_MW713_020911	T110143-04	Water	02/09/11 13:30	02/09/11 14:37
TB_020911	T110143-05	Water	02/09/11 00:00	02/09/11 14:37

SunStar Laboratories, Inc.

Daniel J Chávez

Daniel Chavez, Project Manager

The results in this report apply to the samples analyzed in accordance with the chain of custody document. This analytical report must be reproduced in its entirety.

SunStar Laboratories, Inc.
Providing Quality Analytical Services Nationwide

25712 Commercentre Drive
Lake Forest, California 92630
949.297.5020 Phone
949.297.5027 Fax

Murex	Project: Cenco	
2640 Walnut Ave. Unit F	Project Number: 1003-001-300	**Reported:**
Tustin CA, 92780	Project Manager: Jeremy Squire	02/14/11 16:08

LL_MW704_020911_01
T110143-01 (Water)

Analyte	Result	Reporting Limit	Units	Dilution	Batch	Prepared	Analyzed	Method	Notes
SunStar Laboratories, Inc.									
Purgeable Petroleum Hydrocarbons by EPA 8015C									
C6-C12 (GRO)	**27000**	50	ug/l	1	1021008	02/10/11	02/11/11	EPA 8015C	
Surrogate 4-Bromofluorobenzene		*106 %*	*72.6-146*		"	"	"	"	
Volatile Organic Compounds by EPA Method 8260B									
Bromobenzene	ND	1.0	ug/l	1	1021009	02/10/11	02/10/11	EPA 8260B	
Bromochloromethane	ND	1.0	"	"	"	"	"	"	
Bromodichloromethane	ND	1.0	"	"	"	"	"	"	
Bromoform	ND	1.0	"	"	"	"	"	"	
Bromomethane	ND	1.0	"	"	"	"	"	"	
n-Butylbenzene	ND	1.0	"	"	"	"	"	"	
sec-Butylbenzene	**26**	1.0	"	"	"	"	"	"	
tert-Butylbenzene	**2.9**	1.0	"	"	"	"	"	"	
Carbon tetrachloride	ND	0.50	"	"	"	"	"	"	
Chlorobenzene	ND	1.0	"	"	"	"	"	"	
Chloroethane	ND	1.0	"	"	"	"	"	"	
Chloroform	ND	1.0	"	"	"	"	"	"	
Chloromethane	ND	1.0	"	"	"	"	"	"	
2-Chlorotoluene	ND	1.0	"	"	"	"	"	"	
4-Chlorotoluene	ND	1.0	"	"	"	"	"	"	
Dibromochloromethane	ND	1.0	"	"	"	"	"	"	
1,2-Dibromo-3-chloropropane	ND	1.0	"	"	"	"	"	"	
1,2-Dibromoethane (EDB)	**1.4**	1.0	"	"	"	"	"	"	
Dibromomethane	ND	1.0	"	"	"	"	"	"	
1,2-Dichlorobenzene	ND	1.0	"	"	"	"	"	"	
1,3-Dichlorobenzene	ND	1.0	"	"	"	"	"	"	
1,4-Dichlorobenzene	ND	1.0	"	"	"	"	"	"	
Dichlorodifluoromethane	ND	0.50	"	"	"	"	"	"	
1,1-Dichloroethane	**1.2**	1.0	"	"	"	"	"	"	
1,2-Dichloroethane	**38**	0.50	"	"	"	"	"	"	
1,1-Dichloroethene	ND	1.0	"	"	"	"	"	"	
cis-1,2-Dichloroethene	**2.5**	1.0	"	"	"	"	"	"	
trans-1,2-Dichloroethene	ND	1.0	"	"	"	"	"	"	

SunStar Laboratories, Inc.

The results in this report apply to the samples analyzed in accordance with the chain of custody document. This analytical report must be reproduced in its entirety.

Daniel Chavez, Project Manager

SunStar Laboratories, Inc.
Providing Quality Analytical Services Nationwide

25712 Commercentre Drive
Lake Forest, California 92630
949.297.5020 Phone
949.297.5027 Fax

Murex	Project: Cenco	
2640 Walnut Ave. Unit F	Project Number: 1003-001-300	**Reported:**
Tustin CA, 92780	Project Manager: Jeremy Squire	02/14/11 16:08

LL_MW704_020911_01

T110143-01 (Water)

SunStar Laboratories, Inc.

Volatile Organic Compounds by EPA Method 8260B

Analyte	Result	Reporting Limit	Units	Dilution	Batch	Prepared	Analyzed	Method	Notes
1,2-Dichloropropane	ND	1.0	ug/l	1	1021009	02/10/11	02/10/11	EPA 8260B	
1,3-Dichloropropane	ND	1.0	"	"	"	"	"	"	
2,2-Dichloropropane	ND	1.0	"	"	"	"	"	"	
1,1-Dichloropropene	ND	1.0	"	"	"	"	"	"	
cis-1,3-Dichloropropene	ND	0.50	"	"	"	"	"	"	
trans-1,3-Dichloropropene	ND	0.50	"	"	"	"	"	"	
Hexachlorobutadiene	ND	1.0	"	"	"	"	"	"	
Isopropylbenzene	**95**	1.0	"	"	"	"	"	"	
p-Isopropyltoluene	**27**	1.0	"	"	"	"	"	"	
Methylene chloride	ND	1.0	"	"	"	"	"	"	
Naphthalene	**120**	25	"	25	"	"	02/14/11	"	
n-Propylbenzene	**76**	1.0	"	1	"	"	02/10/11	"	
Styrene	ND	1.0	"	"	"	"	"	"	
1,1,2,2-Tetrachloroethane	ND	1.0	"	"	"	"	"	"	
1,1,1,2-Tetrachloroethane	ND	1.0	"	"	"	"	"	"	
Tetrachloroethene	ND	1.0	"	"	"	"	"	"	
1,2,3-Trichlorobenzene	ND	1.0	"	"	"	"	"	"	
1,2,4-Trichlorobenzene	ND	1.0	"	"	"	"	"	"	
1,1,2-Trichloroethane	ND	1.0	"	"	"	"	"	"	
1,1,1-Trichloroethane	ND	1.0	"	"	"	"	"	"	
Trichloroethene	**2.3**	1.0	"	"	"	"	"	"	
Trichlorofluoromethane	ND	1.0	"	"	"	"	"	"	
1,2,3-Trichloropropane	ND	1.0	"	"	"	"	"	"	
1,3,5-Trimethylbenzene	**520**	25	"	25	"	"	02/14/11	"	
1,2,4-Trimethylbenzene	**1200**	25	"	"	"	"	"	"	
Vinyl chloride	ND	1.0	"	1	"	"	02/10/11	"	
Benzene	**1800**	12	"	25	"	"	02/14/11	"	
Toluene	**2000**	12	"	"	"	"	"	"	
Ethylbenzene	**610**	12	"	"	"	"	"	"	
m,p-Xylene	**3600**	25	"	"	"	"	"	"	
o-Xylene	**680**	12	"	"	"	"	"	"	
Tert-amyl methyl ether	ND	2.0	"	1	"	"	02/10/11	"	
Tert-butyl alcohol	ND	10	"	"	"	"	"	"	

SunStar Laboratories, Inc.

The results in this report apply to the samples analyzed in accordance with the chain of custody document. This analytical report must be reproduced in its entirety.

Daniel Chavez, Project Manager

SunStar Laboratories, Inc.
PROVIDING QUALITY ANALYTICAL SERVICES NATIONWIDE

25712 Commercentre Drive
Lake Forest, California 92630
949.297.5020 Phone
949.297.5027 Fax

Murex	Project: Cenco	
2640 Walnut Ave. Unit F	Project Number: 1003-001-300	**Reported:**
Tustin CA, 92780	Project Manager: Jeremy Squire	02/14/11 16:08

LL_MW704_020911_01

T110143-01 (Water)

Analyte	Result	Reporting Limit	Units	Dilution	Batch	Prepared	Analyzed	Method	Notes
SunStar Laboratories, Inc.									
Volatile Organic Compounds by EPA Method 8260B									
Di-isopropyl ether	ND	2.0	ug/l	1	1021009	02/10/11	02/10/11	EPA 8260B	
Ethyl tert-butyl ether	ND	2.0	"	"	"	"	"	"	
Methyl tert-butyl ether	**210**	25	"	25	"	"	02/14/11	"	
1,1,2-trichloro-1,2,2-trifluoroethane (CFC 113)	ND	5.0	"	1	"	"	02/10/11	"	
Surrogate 4-Bromofluorobenzene		*93.2 %*	*77.1-110*		"	"	"	"	
Surrogate Dibromofluoromethane		*64.4 %*	*66.3-111*		"	"	"	"	*S-GC*
Surrogate Toluene-d8		*97.5 %*	*84.7-109*		"	"	"	"	

SunStar Laboratories, Inc.

The results in this report apply to the samples analyzed in accordance with the chain of custody document. This analytical report must be reproduced in its entirety.

Daniel Chavez, Project Manager

SunStar Laboratories, Inc.
Providing Quality Analytical Services Nationwide

25712 Commercentre Drive
Lake Forest, California 92630
949.297.5020 Phone
949.297.5027 Fax

Murex	Project: Cenco	
2640 Walnut Ave. Unit F	Project Number: 1003-001-300	**Reported:**
Tustin CA, 92780	Project Manager: Jeremy Squire	02/14/11 16:08

LL_MW704_020911_02

T110143-02 (Water)

Analyte	Result	Reporting Limit	Units	Dilution	Batch	Prepared	Analyzed	Method	Notes
SunStar Laboratories, Inc.									
Purgeable Petroleum Hydrocarbons by EPA 8015C									
C6-C12 (GRO)	**26000**	50	ug/l	1	1021008	02/10/11	02/11/11	EPA 8015C	
Surrogate 4-Bromofluorobenzene		*116 %*	*72.6-146*		"	"	"	"	
Volatile Organic Compounds by EPA Method 8260B									
Bromobenzene	ND	1.0	ug/l	1	1021009	02/10/11	02/10/11	EPA 8260B	
Bromochloromethane	ND	1.0	"	"	"	"	"	"	
Bromodichloromethane	ND	1.0	"	"	"	"	"	"	
Bromoform	ND	1.0	"	"	"	"	"	"	
Bromomethane	ND	1.0	"	"	"	"	"	"	
n-Butylbenzene	ND	1.0	"	"	"	"	"	"	
sec-Butylbenzene	**25**	1.0	"	"	"	"	"	"	
tert-Butylbenzene	**2.9**	1.0	"	"	"	"	"	"	
Carbon tetrachloride	ND	0.50	"	"	"	"	"	"	
Chlorobenzene	ND	1.0	"	"	"	"	"	"	
Chloroethane	ND	1.0	"	"	"	"	"	"	
Chloroform	ND	1.0	"	"	"	"	"	"	
Chloromethane	ND	1.0	"	"	"	"	"	"	
2-Chlorotoluene	ND	1.0	"	"	"	"	"	"	
4-Chlorotoluene	ND	1.0	"	"	"	"	"	"	
Dibromochloromethane	ND	1.0	"	"	"	"	"	"	
1,2-Dibromo-3-chloropropane	ND	1.0	"	"	"	"	"	"	
1,2-Dibromoethane (EDB)	ND	1.0	"	"	"	"	"	"	
Dibromomethane	ND	1.0	"	"	"	"	"	"	
1,2-Dichlorobenzene	ND	1.0	"	"	"	"	"	"	
1,3-Dichlorobenzene	ND	1.0	"	"	"	"	"	"	
1,4-Dichlorobenzene	ND	1.0	"	"	"	"	"	"	
Dichlorodifluoromethane	ND	0.50	"	"	"	"	"	"	
1,1-Dichloroethane	**1.3**	1.0	"	"	"	"	"	"	
1,2-Dichloroethane	**40**	0.50	"	"	"	"	"	"	
1,1-Dichloroethene	ND	1.0	"	"	"	"	"	"	
cis-1,2-Dichloroethene	**2.5**	1.0	"	"	"	"	"	"	
trans-1,2-Dichloroethene	ND	1.0	"	"	"	"	"	"	
1,2-Dichloropropane	ND	1.0	"	"	"	"	"	"	

SunStar Laboratories, Inc.

The results in this report apply to the samples analyzed in accordance with the chain of custody document. This analytical report must be reproduced in its entirety.

Daniel Chavez, Project Manager

SunStar Laboratories, Inc.
Providing Quality Analytical Services Nationwide

25712 Commercentre Drive
Lake Forest, California 92630
949.297.5020 Phone
949.297.5027 Fax

Murex	Project: Cenco	
2640 Walnut Ave. Unit F	Project Number: 1003-001-300	**Reported:**
Tustin CA, 92780	Project Manager: Jeremy Squire	02/14/11 16:08

LL_MW704_020911_02

T110143-02 (Water)

SunStar Laboratories, Inc.

Volatile Organic Compounds by EPA Method 8260B

Analyte	Result	Reporting Limit	Units	Dilution	Batch	Prepared	Analyzed	Method	Notes
1,3-Dichloropropane	ND	1.0	ug/l	1	1021009	02/10/11	02/10/11	EPA 8260B	
2,2-Dichloropropane	ND	1.0	"	"	"	"	"	"	
1,1-Dichloropropene	ND	1.0	"	"	"	"	"	"	
cis-1,3-Dichloropropene	ND	0.50	"	"	"	"	"	"	
trans-1,3-Dichloropropene	ND	0.50	"	"	"	"	"	"	
Hexachlorobutadiene	ND	1.0	"	"	"	"	"	"	
Isopropylbenzene	**86**	1.0	"	"	"	"	"	"	
p-Isopropyltoluene	**26**	1.0	"	"	"	"	"	"	
Methylene chloride	ND	1.0	"	"	"	"	"	"	
Naphthalene	**96**	25	"	25	"	"	02/14/11	"	
n-Propylbenzene	**71**	1.0	"	1	"	"	02/10/11	"	
Styrene	ND	1.0	"	"	"	"	"	"	
1,1,2,2-Tetrachloroethane	ND	1.0	"	"	"	"	"	"	
1,1,1,2-Tetrachloroethane	ND	1.0	"	"	"	"	"	"	
Tetrachloroethene	ND	1.0	"	"	"	"	"	"	
1,2,3-Trichlorobenzene	ND	1.0	"	"	"	"	"	"	
1,2,4-Trichlorobenzene	ND	1.0	"	"	"	"	"	"	
1,1,2-Trichloroethane	ND	1.0	"	"	"	"	"	"	
1,1,1-Trichloroethane	ND	1.0	"	"	"	"	"	"	
Trichloroethene	ND	1.0	"	"	"	"	"	"	
Trichlorofluoromethane	ND	1.0	"	"	"	"	"	"	
1,2,3-Trichloropropane	ND	1.0	"	"	"	"	"	"	
1,3,5-Trimethylbenzene	**550**	25	"	25	"	"	02/14/11	"	
1,2,4-Trimethylbenzene	**1300**	25	"	"	"	"	"	"	
Vinyl chloride	ND	1.0	"	1	"	"	02/10/11	"	
Benzene	**1900**	12	"	25	"	"	02/14/11	"	
Toluene	**2400**	12	"	"	"	"	"	"	
Ethylbenzene	**620**	12	"	"	"	"	"	"	
m,p-Xylene	**3700**	25	"	"	"	"	"	"	
o-Xylene	**720**	12	"	"	"	"	"	"	
Tert-amyl methyl ether	ND	2.0	"	1	"	"	02/10/11	"	
Tert-butyl alcohol	ND	10	"	"	"	"	"	"	
Di-isopropyl ether	ND	2.0	"	"	"	"	"	"	

SunStar Laboratories, Inc.

The results in this report apply to the samples analyzed in accordance with the chain of custody document. This analytical report must be reproduced in its entirety.

Daniel Chavez, Project Manager

SunStar Laboratories, Inc.
PROVIDING QUALITY ANALYTICAL SERVICES NATIONWIDE

25712 Commercentre Drive
Lake Forest, California 92630
949.297.5020 Phone
949.297.5027 Fax

Murex	Project: Cenco	
2640 Walnut Ave. Unit F	Project Number: 1003-001-300	**Reported:**
Tustin CA, 92780	Project Manager: Jeremy Squire	02/14/11 16:08

LL_MW704_020911_02

T110143-02 (Water)

Analyte	Result	Reporting Limit	Units	Dilution	Batch	Prepared	Analyzed	Method	Notes
SunStar Laboratories, Inc.									
Volatile Organic Compounds by EPA Method 8260B									
Ethyl tert-butyl ether	ND	2.0	ug/l	1	1021009	02/10/11	02/10/11	EPA 8260B	
Methyl tert-butyl ether	**430**	25	"	25	"	"	02/14/11	"	
1,1,2-trichloro-1,2,2-trifluoroethane (CFC 113)	ND	5.0	"	1	"	"	02/10/11	"	
Surrogate 4-Bromofluorobenzene		*97.5 %*	*77.1-110*		"	"	"	"	
Surrogate Dibromofluoromethane		*65.4 %*	*66.3-111*		"	"	"	"	*S-GC*
Surrogate Toluene-d8		*98.4 %*	*84.7-109*		"	"	"	"	

SunStar Laboratories, Inc.

The results in this report apply to the samples analyzed in accordance with the chain of custody document. This analytical report must be reproduced in its entirety.

Daniel Chavez, Project Manager

SunStar Laboratories, Inc.
Providing Quality Analytical Services Nationwide

25712 Commercentre Drive
Lake Forest, California 92630
949.297.5020 Phone
949.297.5027 Fax

Murex	Project: Cenco	
2640 Walnut Ave. Unit F	Project Number: 1003-001-300	**Reported:**
Tustin CA, 92780	Project Manager: Jeremy Squire	02/14/11 16:08

LL_MW712_020911

T110143-03 (Water)

Analyte	Result	Reporting Limit	Units	Dilution	Batch	Prepared	Analyzed	Method	Notes
SunStar Laboratories, Inc.									
Purgeable Petroleum Hydrocarbons by EPA 8015C									
C6-C12 (GRO)	**14000**	50	ug/l	1	1021008	02/10/11	02/11/11	EPA 8015C	
Surrogate 4-Bromofluorobenzene		*122 %*	*72.6-146*		"	"	"	"	
Volatile Organic Compounds by EPA Method 8260B									
Bromobenzene	ND	1.0	ug/l	1	1021009	02/10/11	02/10/11	EPA 8260B	
Bromochloromethane	ND	1.0	"	"	"	"	"	"	
Bromodichloromethane	ND	1.0	"	"	"	"	"	"	
Bromoform	ND	1.0	"	"	"	"	"	"	
Bromomethane	ND	1.0	"	"	"	"	"	"	
n-Butylbenzene	ND	1.0	"	"	"	"	"	"	
sec-Butylbenzene	**19**	1.0	"	"	"	"	"	"	
tert-Butylbenzene	**2.2**	1.0	"	"	"	"	"	"	
Carbon tetrachloride	ND	0.50	"	"	"	"	"	"	
Chlorobenzene	ND	1.0	"	"	"	"	"	"	
Chloroethane	ND	1.0	"	"	"	"	"	"	
Chloroform	ND	1.0	"	"	"	"	"	"	
Chloromethane	**4.0**	1.0	"	"	"	"	"	"	
2-Chlorotoluene	ND	1.0	"	"	"	"	"	"	
4-Chlorotoluene	ND	1.0	"	"	"	"	"	"	
Dibromochloromethane	ND	1.0	"	"	"	"	"	"	
1,2-Dibromo-3-chloropropane	ND	1.0	"	"	"	"	"	"	
1,2-Dibromoethane (EDB)	ND	1.0	"	"	"	"	"	"	
Dibromomethane	ND	1.0	"	"	"	"	"	"	
1,2-Dichlorobenzene	ND	1.0	"	"	"	"	"	"	
1,3-Dichlorobenzene	ND	1.0	"	"	"	"	"	"	
1,4-Dichlorobenzene	ND	1.0	"	"	"	"	"	"	
Dichlorodifluoromethane	ND	0.50	"	"	"	"	"	"	
1,1-Dichloroethane	ND	1.0	"	"	"	"	"	"	
1,2-Dichloroethane	ND	0.50	"	"	"	"	"	"	
1,1-Dichloroethene	ND	1.0	"	"	"	"	"	"	
cis-1,2-Dichloroethene	**2.6**	1.0	"	"	"	"	"	"	
trans-1,2-Dichloroethene	ND	1.0	"	"	"	"	"	"	
1,2-Dichloropropane	ND	1.0	"	"	"	"	"	"	

SunStar Laboratories, Inc.

The results in this report apply to the samples analyzed in accordance with the chain of custody document. This analytical report must be reproduced in its entirety.

Daniel Chavez, Project Manager

SunStar Laboratories, Inc.
Providing Quality Analytical Services Nationwide

25712 Commercentre Drive
Lake Forest, California 92630
949.297.5020 Phone
949.297.5027 Fax

Murex	Project: Cenco	
2640 Walnut Ave. Unit F	Project Number: 1003-001-300	**Reported:**
Tustin CA, 92780	Project Manager: Jeremy Squire	02/14/11 16:08

LL_MW712_020911

T110143-03 (Water)

SunStar Laboratories, Inc.

Volatile Organic Compounds by EPA Method 8260B

Analyte	Result	Reporting Limit	Units	Dilution	Batch	Prepared	Analyzed	Method	Notes
1,3-Dichloropropane	ND	1.0	ug/l	1	1021009	02/10/11	02/10/11	EPA 8260B	
2,2-Dichloropropane	ND	1.0	"	"	"	"	"	"	
1,1-Dichloropropene	ND	1.0	"	"	"	"	"	"	
cis-1,3-Dichloropropene	ND	0.50	"	"	"	"	"	"	
trans-1,3-Dichloropropene	ND	0.50	"	"	"	"	"	"	
Hexachlorobutadiene	ND	1.0	"	"	"	"	"	"	
Isopropylbenzene	**100**	1.0	"	"	"	"	"	"	
p-Isopropyltoluene	**6.6**	1.0	"	"	"	"	"	"	
Methylene chloride	ND	1.0	"	"	"	"	"	"	
Naphthalene	**98**	25	"	25	"	"	02/14/11	"	
n-Propylbenzene	**120**	25	"	"	"	"	"	"	
Styrene	ND	1.0	"	1	"	"	02/10/11	"	
1,1,2,2-Tetrachloroethane	ND	1.0	"	"	"	"	"	"	
1,1,1,2-Tetrachloroethane	ND	1.0	"	"	"	"	"	"	
Tetrachloroethene	ND	1.0	"	"	"	"	"	"	
1,2,3-Trichlorobenzene	ND	1.0	"	"	"	"	"	"	
1,2,4-Trichlorobenzene	ND	1.0	"	"	"	"	"	"	
1,1,2-Trichloroethane	ND	1.0	"	"	"	"	"	"	
1,1,1-Trichloroethane	ND	1.0	"	"	"	"	"	"	
Trichloroethene	ND	1.0	"	"	"	"	"	"	
Trichlorofluoromethane	ND	1.0	"	"	"	"	"	"	
1,2,3-Trichloropropane	ND	1.0	"	"	"	"	"	"	
1,3,5-Trimethylbenzene	**170**	25	"	25	"	"	02/14/11	"	
1,2,4-Trimethylbenzene	**460**	25	"	"	"	"	"	"	
Vinyl chloride	ND	1.0	"	1	"	"	02/10/11	"	
Benzene	**1200**	12	"	25	"	"	02/14/11	"	
Toluene	**520**	12	"	"	"	"	"	"	
Ethylbenzene	**380**	12	"	"	"	"	"	"	
m,p-Xylene	**1800**	25	"	"	"	"	"	"	
o-Xylene	**390**	12	"	"	"	"	"	"	
Tert-amyl methyl ether	ND	2.0	"	1	"	"	02/10/11	"	
Tert-butyl alcohol	ND	10	"	"	"	"	"	"	
Di-isopropyl ether	ND	2.0	"	"	"	"	"	"	

SunStar Laboratories, Inc.

The results in this report apply to the samples analyzed in accordance with the chain of custody document. This analytical report must be reproduced in its entirety.

Daniel Chavez, Project Manager

SunStar Laboratories, Inc.
PROVIDING QUALITY ANALYTICAL SERVICES NATIONWIDE

25712 Commercentre Drive
Lake Forest, California 92630
949.297.5020 Phone
949.297.5027 Fax

Murex	Project: Cenco	
2640 Walnut Ave. Unit F	Project Number: 1003-001-300	**Reported:**
Tustin CA, 92780	Project Manager: Jeremy Squire	02/14/11 16:08

LL_MW712_020911

T110143-03 (Water)

Analyte	Result	Reporting Limit	Units	Dilution	Batch	Prepared	Analyzed	Method	Notes
SunStar Laboratories, Inc.									
Volatile Organic Compounds by EPA Method 8260B									
Ethyl tert-butyl ether	ND	2.0	ug/l	1	1021009	02/10/11	02/10/11	EPA 8260B	
Methyl tert-butyl ether	**23**	1.0	"	"	"	"	"	"	
1,1,2-trichloro-1,2,2-trifluoroethane (CFC 113)	ND	5.0	"	"	"	"	"	"	
Surrogate 4-Bromofluorobenzene		*97.8 %*	*77.1-110*		"	"	"	"	
Surrogate Dibromofluoromethane		*67.5 %*	*66.3-111*		"	"	"	"	
Surrogate Toluene-d8		*103 %*	*84.7-109*		"	"	"	"	

SunStar Laboratories, Inc.

The results in this report apply to the samples analyzed in accordance with the chain of custody document. This analytical report must be reproduced in its entirety.

Daniel Chavez, Project Manager

SunStar Laboratories, Inc.
Providing Quality Analytical Services Nationwide

25712 Commercentre Drive
Lake Forest, California 92630
949.297.5020 Phone
949.297.5027 Fax

Murex	Project: Cenco	
2640 Walnut Ave. Unit F	Project Number: 1003-001-300	**Reported:**
Tustin CA, 92780	Project Manager: Jeremy Squire	02/14/11 16:08

LL_MW713_020911

T110143-04 (Water)

Analyte	Result	Reporting Limit	Units	Dilution	Batch	Prepared	Analyzed	Method	Notes
SunStar Laboratories, Inc.									
Purgeable Petroleum Hydrocarbons by EPA 8015C									
C6-C12 (GRO)	**280**	50	ug/l	1	1021008	02/10/11	02/11/11	EPA 8015C	
Surrogate 4-Bromofluorobenzene		*127 %*	*72.6-146*		"	"	"	"	
Volatile Organic Compounds by EPA Method 8260B									
Bromobenzene	ND	1.0	ug/l	1	1021009	02/10/11	02/14/11	EPA 8260B	
Bromochloromethane	ND	1.0	"	"	"	"	"	"	
Bromodichloromethane	ND	1.0	"	"	"	"	"	"	
Bromoform	ND	1.0	"	"	"	"	"	"	
Bromomethane	ND	1.0	"	"	"	"	"	"	
n-Butylbenzene	ND	1.0	"	"	"	"	"	"	
sec-Butylbenzene	ND	1.0	"	"	"	"	"	"	
tert-Butylbenzene	ND	1.0	"	"	"	"	"	"	
Carbon tetrachloride	ND	0.50	"	"	"	"	"	"	
Chlorobenzene	ND	1.0	"	"	"	"	"	"	
Chloroethane	ND	1.0	"	"	"	"	"	"	
Chloroform	ND	1.0	"	"	"	"	"	"	
Chloromethane	ND	1.0	"	"	"	"	"	"	
2-Chlorotoluene	ND	1.0	"	"	"	"	"	"	
4-Chlorotoluene	ND	1.0	"	"	"	"	"	"	
Dibromochloromethane	ND	1.0	"	"	"	"	"	"	
1,2-Dibromo-3-chloropropane	ND	1.0	"	"	"	"	"	"	
1,2-Dibromoethane (EDB)	ND	1.0	"	"	"	"	"	"	
Dibromomethane	ND	1.0	"	"	"	"	"	"	
1,2-Dichlorobenzene	ND	1.0	"	"	"	"	"	"	
1,3-Dichlorobenzene	ND	1.0	"	"	"	"	"	"	
1,4-Dichlorobenzene	ND	1.0	"	"	"	"	"	"	
Dichlorodifluoromethane	ND	0.50	"	"	"	"	"	"	
1,1-Dichloroethane	ND	1.0	"	"	"	"	"	"	
1,2-Dichloroethane	ND	0.50	"	"	"	"	"	"	
1,1-Dichloroethene	ND	1.0	"	"	"	"	"	"	
cis-1,2-Dichloroethene	**2.2**	1.0	"	"	"	"	"	"	
trans-1,2-Dichloroethene	ND	1.0	"	"	"	"	"	"	
1,2-Dichloropropane	ND	1.0	"	"	"	"	"	"	

SunStar Laboratories, Inc.

Daniel J Chavez

Daniel Chavez, Project Manager

The results in this report apply to the samples analyzed in accordance with the chain of custody document. This analytical report must be reproduced in its entirety.

SunStar Laboratories, Inc.
Providing Quality Analytical Services Nationwide

25712 Commercentre Drive
Lake Forest, California 92630
949.297.5020 Phone
949.297.5027 Fax

Murex	Project: Cenco	
2640 Walnut Ave. Unit F	Project Number: 1003-001-300	**Reported:**
Tustin CA, 92780	Project Manager: Jeremy Squire	02/14/11 16:08

LL_MW713_020911

T110143-04 (Water)

SunStar Laboratories, Inc.

Volatile Organic Compounds by EPA Method 8260B

Analyte	Result	Reporting Limit	Units	Dilution	Batch	Prepared	Analyzed	Method	Notes
1,3-Dichloropropane	ND	1.0	ug/l	1	1021009	02/10/11	02/14/11	EPA 8260B	
2,2-Dichloropropane	ND	1.0	"	"	"	"	"	"	
1,1-Dichloropropene	ND	1.0	"	"	"	"	"	"	
cis-1,3-Dichloropropene	ND	0.50	"	"	"	"	"	"	
trans-1,3-Dichloropropene	ND	0.50	"	"	"	"	"	"	
Hexachlorobutadiene	ND	1.0	"	"	"	"	"	"	
Isopropylbenzene	**3.5**	1.0	"	"	"	"	"	"	
p-Isopropyltoluene	ND	1.0	"	"	"	"	"	"	
Methylene chloride	ND	1.0	"	"	"	"	"	"	
Naphthalene	ND	1.0	"	"	"	"	"	"	
n-Propylbenzene	**7.2**	1.0	"	"	"	"	"	"	
Styrene	ND	1.0	"	"	"	"	"	"	
1,1,2,2-Tetrachloroethane	ND	1.0	"	"	"	"	"	"	
1,1,1,2-Tetrachloroethane	ND	1.0	"	"	"	"	"	"	
Tetrachloroethene	ND	1.0	"	"	"	"	"	"	
1,2,3-Trichlorobenzene	ND	1.0	"	"	"	"	"	"	
1,2,4-Trichlorobenzene	ND	1.0	"	"	"	"	"	"	
1,1,2-Trichloroethane	ND	1.0	"	"	"	"	"	"	
1,1,1-Trichloroethane	ND	1.0	"	"	"	"	"	"	
Trichloroethene	ND	1.0	"	"	"	"	"	"	
Trichlorofluoromethane	ND	1.0	"	"	"	"	"	"	
1,2,3-Trichloropropane	ND	1.0	"	"	"	"	"	"	
1,3,5-Trimethylbenzene	ND	1.0	"	"	"	"	"	"	
1,2,4-Trimethylbenzene	ND	1.0	"	"	"	"	"	"	
Vinyl chloride	ND	1.0	"	"	"	"	"	"	
Benzene	**29**	0.50	"	"	"	"	"	"	
Toluene	ND	0.50	"	"	"	"	"	"	
Ethylbenzene	ND	0.50	"	"	"	"	"	"	
m,p-Xylene	**1.7**	1.0	"	"	"	"	"	"	
o-Xylene	ND	0.50	"	"	"	"	"	"	
Tert-amyl methyl ether	ND	2.0	"	"	"	"	"	"	
Tert-butyl alcohol	ND	10	"	"	"	"	"	"	

SunStar Laboratories, Inc.

The results in this report apply to the samples analyzed in accordance with the chain of custody document. This analytical report must be reproduced in its entirety.

Daniel Chavez, Project Manager

SunStar Laboratories, Inc.
PROVIDING QUALITY ANALYTICAL SERVICES NATIONWIDE

25712 Commercentre Drive
Lake Forest, California 92630
949.297.5020 Phone
949.297.5027 Fax

Murex	Project: Cenco	
2640 Walnut Ave. Unit F	Project Number: 1003-001-300	**Reported:**
Tustin CA, 92780	Project Manager: Jeremy Squire	02/14/11 16:08

LL_MW713_020911

T110143-04 (Water)

Analyte	Result	Reporting Limit	Units	Dilution	Batch	Prepared	Analyzed	Method	Notes
SunStar Laboratories, Inc.									
Volatile Organic Compounds by EPA Method 8260B									
Di-isopropyl ether	ND	2.0	ug/l	1	1021009	02/10/11	02/14/11	EPA 8260B	
Ethyl tert-butyl ether	ND	2.0	"	"	"	"	"	"	
Methyl tert-butyl ether	**3.5**	1.0	"	"	"	"	"	"	
1,1,2-trichloro-1,2,2-trifluoroethane (CFC 113)	ND	5.0	"	"	"	"	"	"	
Surrogate 4-Bromofluorobenzene		*115 %*	*77.1-110*		"	"	"	"	*S-GC*
Surrogate Dibromofluoromethane		*80.8 %*	*66.3-111*		"	"	"	"	
Surrogate Toluene-d8		*137 %*	*84.7-109*		"	"	"	"	*S-GC*

SunStar Laboratories, Inc.

The results in this report apply to the samples analyzed in accordance with the chain of custody document. This analytical report must be reproduced in its entirety.

Daniel Chavez, Project Manager

SunStar Laboratories, Inc.
Providing Quality Analytical Services Nationwide

25712 Commercentre Drive
Lake Forest, California 92630
949.297.5020 Phone
949.297.5027 Fax

Murex	Project: Cenco	
2640 Walnut Ave. Unit F	Project Number: 1003-001-300	**Reported:**
Tustin CA, 92780	Project Manager: Jeremy Squire	02/14/11 16:08

TB_020911

T110143-05 (Water)

Analyte	Result	Reporting Limit	Units	Dilution	Batch	Prepared	Analyzed	Method	Notes
SunStar Laboratories, Inc.									
Volatile Organic Compounds by EPA Method 8260B									
Bromobenzene	ND	1.0	ug/l	1	1021009	02/10/11	02/10/11	EPA 8260B	
Bromochloromethane	ND	1.0	"	"	"	"	"	"	
Bromodichloromethane	ND	1.0	"	"	"	"	"	"	
Bromoform	ND	1.0	"	"	"	"	"	"	
Bromomethane	ND	1.0	"	"	"	"	"	"	
n-Butylbenzene	ND	1.0	"	"	"	"	"	"	
sec-Butylbenzene	ND	1.0	"	"	"	"	"	"	
tert-Butylbenzene	ND	1.0	"	"	"	"	"	"	
Carbon tetrachloride	ND	0.50	"	"	"	"	"	"	
Chlorobenzene	ND	1.0	"	"	"	"	"	"	
Chloroethane	ND	1.0	"	"	"	"	"	"	
Chloroform	ND	1.0	"	"	"	"	"	"	
Chloromethane	ND	1.0	"	"	"	"	"	"	
2-Chlorotoluene	ND	1.0	"	"	"	"	"	"	
4-Chlorotoluene	ND	1.0	"	"	"	"	"	"	
Dibromochloromethane	ND	1.0	"	"	"	"	"	"	
1,2-Dibromo-3-chloropropane	ND	1.0	"	"	"	"	"	"	
1,2-Dibromoethane (EDB)	ND	1.0	"	"	"	"	"	"	
Dibromomethane	ND	1.0	"	"	"	"	"	"	
1,2-Dichlorobenzene	ND	1.0	"	"	"	"	"	"	
1,3-Dichlorobenzene	ND	1.0	"	"	"	"	"	"	
1,4-Dichlorobenzene	ND	1.0	"	"	"	"	"	"	
Dichlorodifluoromethane	ND	0.50	"	"	"	"	"	"	
1,1-Dichloroethane	ND	1.0	"	"	"	"	"	"	
1,2-Dichloroethane	ND	0.50	"	"	"	"	"	"	
1,1-Dichloroethene	ND	1.0	"	"	"	"	"	"	
cis-1,2-Dichloroethene	ND	1.0	"	"	"	"	"	"	
trans-1,2-Dichloroethene	ND	1.0	"	"	"	"	"	"	
1,2-Dichloropropane	ND	1.0	"	"	"	"	"	"	
1,3-Dichloropropane	ND	1.0	"	"	"	"	"	"	
2,2-Dichloropropane	ND	1.0	"	"	"	"	"	"	
1,1-Dichloropropene	ND	1.0	"	"	"	"	"	"	

SunStar Laboratories, Inc.

The results in this report apply to the samples analyzed in accordance with the chain of custody document. This analytical report must be reproduced in its entirety.

Daniel Chavez, Project Manager

SunStar Laboratories, Inc.
Providing Quality Analytical Services Nationwide

25712 Commercentre Drive
Lake Forest, California 92630
949.297.5020 Phone
949.297.5027 Fax

Murex	Project: Cenco	
2640 Walnut Ave. Unit F	Project Number: 1003-001-300	**Reported:**
Tustin CA, 92780	Project Manager: Jeremy Squire	02/14/11 16:08

TB_020911

T110143-05 (Water)

Analyte	Result	Reporting Limit	Units	Dilution	Batch	Prepared	Analyzed	Method	Notes
SunStar Laboratories, Inc.									
Volatile Organic Compounds by EPA Method 8260B									
cis-1,3-Dichloropropene	ND	0.50	ug/l	1	1021009	02/10/11	02/10/11	EPA 8260B	
trans-1,3-Dichloropropene	ND	0.50	"	"	"	"	"	"	
Hexachlorobutadiene	ND	1.0	"	"	"	"	"	"	
Isopropylbenzene	ND	1.0	"	"	"	"	"	"	
p-Isopropyltoluene	ND	1.0	"	"	"	"	"	"	
Methylene chloride	ND	1.0	"	"	"	"	"	"	
Naphthalene	ND	1.0	"	"	"	"	"	"	
n-Propylbenzene	ND	1.0	"	"	"	"	"	"	
Styrene	ND	1.0	"	"	"	"	"	"	
1,1,2,2-Tetrachloroethane	ND	1.0	"	"	"	"	"	"	
1,1,1,2-Tetrachloroethane	ND	1.0	"	"	"	"	"	"	
Tetrachloroethene	ND	1.0	"	"	"	"	"	"	
1,2,3-Trichlorobenzene	ND	1.0	"	"	"	"	"	"	
1,2,4-Trichlorobenzene	ND	1.0	"	"	"	"	"	"	
1,1,2-Trichloroethane	ND	1.0	"	"	"	"	"	"	
1,1,1-Trichloroethane	ND	1.0	"	"	"	"	"	"	
Trichloroethene	ND	1.0	"	"	"	"	"	"	
Trichlorofluoromethane	ND	1.0	"	"	"	"	"	"	
1,2,3-Trichloropropane	ND	1.0	"	"	"	"	"	"	
1,3,5-Trimethylbenzene	ND	1.0	"	"	"	"	"	"	
1,2,4-Trimethylbenzene	ND	1.0	"	"	"	"	"	"	
Vinyl chloride	ND	1.0	"	"	"	"	"	"	
Benzene	ND	0.50	"	"	"	"	"	"	
Toluene	ND	0.50	"	"	"	"	"	"	
Ethylbenzene	ND	0.50	"	"	"	"	"	"	
m,p-Xylene	ND	1.0	"	"	"	"	"	"	
o-Xylene	ND	0.50	"	"	"	"	"	"	
Tert-amyl methyl ether	ND	2.0	"	"	"	"	"	"	
Tert-butyl alcohol	ND	10	"	"	"	"	"	"	
Di-isopropyl ether	ND	2.0	"	"	"	"	"	"	
Ethyl tert-butyl ether	ND	2.0	"	"	"	"	"	"	
Methyl tert-butyl ether	ND	1.0	"	"	"	"	"	"	

SunStar Laboratories, Inc.

The results in this report apply to the samples analyzed in accordance with the chain of custody document. This analytical report must be reproduced in its entirety.

Daniel Chavez, Project Manager

SunStar Laboratories, Inc.
PROVIDING QUALITY ANALYTICAL SERVICES NATIONWIDE

25712 Commercentre Drive
Lake Forest, California 92630
949.297.5020 Phone
949.297.5027 Fax

Murex	Project: Cenco	
2640 Walnut Ave. Unit F	Project Number: 1003-001-300	**Reported:**
Tustin CA, 92780	Project Manager: Jeremy Squire	02/14/11 16:08

TB_020911

T110143-05 (Water)

Analyte	Result	Reporting Limit	Units	Dilution	Batch	Prepared	Analyzed	Method	Notes
SunStar Laboratories, Inc.									
Volatile Organic Compounds by EPA Method 8260B									
1,1,2-trichloro-1,2,2-trifluoroethane (CFC 113)	ND	5.0	ug/l	1	1021009	02/10/11	02/10/11	EPA 8260B	
Surrogate 4-Bromofluorobenzene		*102 %*	*77.1-110*		"	"	"	"	
Surrogate Dibromofluoromethane		*76.5 %*	*66.3-111*		"	"	"	"	
Surrogate Toluene-d8		*101 %*	*84.7-109*		"	"	"	"	

SunStar Laboratories, Inc.

The results in this report apply to the samples analyzed in accordance with the chain of custody document. This analytical report must be reproduced in its entirety.

Daniel Chavez, Project Manager

SunStar Laboratories, Inc.
Providing Quality Analytical Services Nationwide

25712 Commercentre Drive
Lake Forest, California 92630
949.297.5020 Phone
949.297.5027 Fax

Murex	Project: Cenco	
2640 Walnut Ave. Unit F	Project Number: 1003-001-300	**Reported:**
Tustin CA, 92780	Project Manager: Jeremy Squire	02/14/11 16:08

Purgeable Petroleum Hydrocarbons by EPA 8015C - Quality Control

SunStar Laboratories, Inc.

Analyte	Result	Reporting Limit	Units	Spike Level	Source Result	%REC	%REC Limits	RPD	RPD Limit	Notes
Batch 1021008 - EPA 5030 GC										
Blank (1021008-BLK1)				Prepared: 02/10/11		Analyzed: 02/11/11				
C6-C12 (GRO)	ND	50	ug/l							
Surrogate 4-Bromofluorobenzene	*190*		*"*	*200*		*95.0*	*72.6-146*			
LCS (1021008-BS1)				Prepared: 02/10/11		Analyzed: 02/11/11				
C6-C12 (GRO)	4640	50	ug/l	5500		84.4	75-125			
Surrogate 4-Bromofluorobenzene	*157*		*"*	*200*		*78.6*	*72.6-146*			
LCS Dup (1021008-BSD1)				Prepared: 02/10/11		Analyzed: 02/11/11				
C6-C12 (GRO)	4520	50	ug/l	5500		82.1	75-125	2.69	20	
Surrogate 4-Bromofluorobenzene	*233*		*"*	*200*		*116*	*72.6-146*			

SunStar Laboratories, Inc.

The results in this report apply to the samples analyzed in accordance with the chain of custody document. This analytical report must be reproduced in its entirety.

Daniel Chavez, Project Manager

SunStar Laboratories, Inc.
Providing Quality Analytical Services Nationwide

25712 Commercentre Drive
Lake Forest, California 92630
949.297.5020 Phone
949.297.5027 Fax

Murex	Project: Cenco	
2640 Walnut Ave. Unit F	Project Number: 1003-001-300	**Reported:**
Tustin CA, 92780	Project Manager: Jeremy Squire	02/14/11 16:08

Volatile Organic Compounds by EPA Method 8260B - Quality Control

SunStar Laboratories, Inc.

Analyte	Result	Reporting Limit	Units	Spike Level	Source Result	%REC	%REC Limits	RPD	RPD Limit	Notes
Batch 1021009 - EPA 5030 GCMS										
Blank (1021009-BLK1)				Prepared & Analyzed: 02/10/11						
Bromobenzene	ND	1.0	ug/l							
Bromochloromethane	ND	1.0	"							
Bromodichloromethane	ND	1.0	"							
Bromoform	ND	1.0	"							
Bromomethane	ND	1.0	"							
n-Butylbenzene	ND	1.0	"							
sec-Butylbenzene	ND	1.0	"							
tert-Butylbenzene	ND	1.0	"							
Carbon tetrachloride	ND	0.50	"							
Chlorobenzene	ND	1.0	"							
Chloroethane	ND	1.0	"							
Chloroform	ND	1.0	"							
Chloromethane	ND	1.0	"							
2-Chlorotoluene	ND	1.0	"							
4-Chlorotoluene	ND	1.0	"							
Dibromochloromethane	ND	1.0	"							
1,2-Dibromo-3-chloropropane	ND	1.0	"							
1,2-Dibromoethane (EDB)	ND	1.0	"							
Dibromomethane	ND	1.0	"							
1,2-Dichlorobenzene	ND	1.0	"							
1,3-Dichlorobenzene	ND	1.0	"							
1,4-Dichlorobenzene	ND	1.0	"							
Dichlorodifluoromethane	ND	0.50	"							
1,1-Dichloroethane	ND	1.0	"							
1,2-Dichloroethane	ND	0.50	"							
1,1-Dichloroethene	ND	1.0	"							
cis-1,2-Dichloroethene	ND	1.0	"							
trans-1,2-Dichloroethene	ND	1.0	"							
1,2-Dichloropropane	ND	1.0	"							
1,3-Dichloropropane	ND	1.0	"							
2,2-Dichloropropane	ND	1.0	"							
1,1-Dichloropropene	ND	1.0	"							
cis-1,3-Dichloropropene	ND	0.50	"							
trans-1,3-Dichloropropene	ND	0.50	"							
Hexachlorobutadiene	ND	1.0	"							
Isopropylbenzene	ND	1.0	"							

SunStar Laboratories, Inc.

The results in this report apply to the samples analyzed in accordance with the chain of custody document. This analytical report must be reproduced in its entirety.

Daniel Chavez, Project Manager

SunStar Laboratories, Inc.
Providing Quality Analytical Services Nationwide

25712 Commercentre Drive
Lake Forest, California 92630
949.297.5020 Phone
949.297.5027 Fax

Murex	Project: Cenco	
2640 Walnut Ave. Unit F	Project Number: 1003-001-300	**Reported:**
Tustin CA, 92780	Project Manager: Jeremy Squire	02/14/11 16:08

Volatile Organic Compounds by EPA Method 8260B - Quality Control

SunStar Laboratories, Inc.

Analyte	Result	Reporting Limit	Units	Spike Level	Source Result	%REC	%REC Limits	RPD	RPD Limit	Notes
Batch 1021009 - EPA 5030 GCMS										
Blank (1021009-BLK1)				Prepared & Analyzed: 02/10/11						
p-Isopropyltoluene	ND	1.0	ug/l							
Methylene chloride	ND	1.0	"							
Naphthalene	ND	1.0	"							
n-Propylbenzene	ND	1.0	"							
Styrene	ND	1.0	"							
1,1,2,2-Tetrachloroethane	ND	1.0	"							
1,1,1,2-Tetrachloroethane	ND	1.0	"							
Tetrachloroethene	ND	1.0	"							
1,2,3-Trichlorobenzene	ND	1.0	"							
1,2,4-Trichlorobenzene	ND	1.0	"							
1,1,2-Trichloroethane	ND	1.0	"							
1,1,1-Trichloroethane	ND	1.0	"							
Trichloroethene	ND	1.0	"							
Trichlorofluoromethane	ND	1.0	"							
1,2,3-Trichloropropane	ND	1.0	"							
1,3,5-Trimethylbenzene	ND	1.0	"							
1,2,4-Trimethylbenzene	ND	1.0	"							
Vinyl chloride	ND	1.0	"							
Benzene	ND	0.50	"							
Toluene	ND	0.50	"							
Ethylbenzene	ND	0.50	"							
m,p-Xylene	ND	1.0	"							
o-Xylene	ND	0.50	"							
Tert-amyl methyl ether	ND	2.0	"							
Tert-butyl alcohol	ND	10	"							
Di-isopropyl ether	ND	2.0	"							
Ethyl tert-butyl ether	ND	2.0	"							
Methyl tert-butyl ether	ND	1.0	"							
1,1,2-trichloro-1,2,2-trifluoroethane (CFC 113)	ND	5.0	"							
Surrogate 4-Bromofluorobenzene	*7.92*		*"*	*8.00*		*99.0*	*77.1-110*			
Surrogate Dibromofluoromethane	*7.89*		*"*	*8.00*		*98.6*	*66.3-111*			
Surrogate Toluene-d8	*7.88*		*"*	*8.00*		*98.5*	*84.7-109*			

SunStar Laboratories, Inc.

The results in this report apply to the samples analyzed in accordance with the chain of custody document. This analytical report must be reproduced in its entirety.

Daniel Chavez, Project Manager

SunStar Laboratories, Inc.
Providing Quality Analytical Services Nationwide

25712 Commercentre Drive
Lake Forest, California 92630
949.297.5020 Phone
949.297.5027 Fax

Murex	Project: Cenco	
2640 Walnut Ave. Unit F	Project Number: 1003-001-300	**Reported:**
Tustin CA, 92780	Project Manager: Jeremy Squire	02/14/11 16:08

Volatile Organic Compounds by EPA Method 8260B - Quality Control

SunStar Laboratories, Inc.

Analyte	Result	Reporting Limit	Units	Spike Level	Source Result	%REC	%REC Limits	RPD	RPD Limit	Notes
Batch 1021009 - EPA 5030 GCMS										
LCS (1021009-BS1)				Prepared & Analyzed: 02/10/11						
Chlorobenzene	23.7	1.0	ug/l	20.0		118	75-125			
1,1-Dichloroethene	18.7	1.0	"	20.0		93.4	75-125			
Trichloroethene	17 5	1.0	"	20.0		87.6	75-125			
Benzene	21.7	0.50	"	20.0		109	75-125			
Toluene	21.6	0.50	"	20.0		108	75-125			
Surrogate 4-Bromofluorobenzene	*8.22*		*"*	*8.00*		*103*	*77.1-110*			
Surrogate Dibromofluoromethane	*6.22*		*"*	*8.00*		*77.8*	*66.3-111*			
Surrogate Toluene-d8	*7.91*		*"*	*8.00*		*98.9*	*84.7-109*			
LCS Dup (1021009-BSD1)				Prepared & Analyzed: 02/10/11						
Chlorobenzene	24 1	1.0	ug/l	20.0		120	75-125	1.68	20	
1,1-Dichloroethene	19.7	1.0	"	20.0		98.6	75-125	5.31	20	
Trichloroethene	18 3	1.0	"	20.0		91.6	75-125	4.52	20	
Benzene	21.7	0.50	"	20.0		109	75-125	0.0920	20	
Toluene	21.7	0.50	"	20.0		108	75-125	0.647	20	
Surrogate 4-Bromofluorobenzene	*8.41*		*"*	*8.00*		*105*	*77.1-110*			
Surrogate Dibromofluoromethane	*6.37*		*"*	*8.00*		*79.6*	*66.3-111*			
Surrogate Toluene-d8	*7.86*		*"*	*8.00*		*98.2*	*84.7-109*			

SunStar Laboratories, Inc.

The results in this report apply to the samples analyzed in accordance with the chain of custody document. This analytical report must be reproduced in its entirety.

Daniel Chavez, Project Manager

SunStar Laboratories, Inc.
PROVIDING QUALITY ANALYTICAL SERVICES NATIONWIDE

25712 Commercentre Drive
Lake Forest, California 92630
949.297.5020 Phone
949.297.5027 Fax

Murex	Project: Cenco	
2640 Walnut Ave. Unit F	Project Number: 1003-001-300	**Reported:**
Tustin CA, 92780	Project Manager: Jeremy Squire	02/14/11 16:08

Notes and Definitions

S-GC	Surrogate recovery outside of established control limits. The data was accepted based on valid recovery of the remaining surrogate(s).
DET	Analyte DETECTED
ND	Analyte NOT DETECTED at or above the reporting limit
NR	Not Reported
dry	Sample results reported on a dry weight basis
RPD	Relative Percent Difference

SunStar Laboratories, Inc.

Daniel J Chávez

Daniel Chavez, Project Manager

The results in this report apply to the samples analyzed in accordance with the chain of custody document. This analytical report must be reproduced in its entirety.

SunStar Laboratories, Inc.
25712 Commercentre Dr
Lake Forest, CA 92630
949-297-5020

Chain of Custody Record

Client: Murex Environmental, Inc.
Address: 2640 Walnut Ave, Unit F
Phone: (714) 508-0800 Fax: (714) 508-0880
Project Manager: Jeremy Squire (714) 604-5836

Date: 2·9·2011 Page: 1 Of 1
Project Name: CENCO
Collector: Frane Sosic Client Project #: 1003-001-300
Batch #: T110143 EDF #:

Sample ID	Date Sampled	Time	Sample Type	8260 (VOCs NO OXY)	8260 + OXY	1,4-Dioxane	8270 Semi-Volatiles (PAHs, etc)	8021 BTEX	8015M (TPH gasoline)	8015M (TPH diesel)	Hexavalent Chromium (7199)	6010/7000 Title 22 Metals	PCBs				Total # of containers	Comments/Preservative	Laboratory ID #
LL_MW704_020911_01	2·9·2011	0930	GW		X				X								6		01
LL_MW704_020911_02		1000	GW		X				X								6		02
LL_MW712_020911		1245	GW		X				X								6		03
LL_MW713_020911		1330	GW		X				X								6		04
TB_020911			Water		X												2		05

Relinquished by: (signature)	Date / Time	Received by: (signat	Date / Time
[signature]	2/9/2011 1437	[signature]	2/9/11 1437
Relinquished by: (signature)	Date / Time	Received by: (signat	Date / Time
Relinquished by: (signature)	Date / Time	Received by: (signat	Date / Time

Total # of containers	26
Chain of Custody seals	N
Seals intact? Y/N/NA	N/A
Received good condition/cold	Y
Turn around time:	

Notes
11.4

Sample disposal Instructions: Disposal @ $2.00 each ____ Return to client ____ Pickup ____

SunStar Laboratories, Inc.
PROVIDING QUALITY ANALYTICAL SERVICES NATIONWIDE

SAMPLE RECEIVING REVIEW SHEET

BATCH # T110143

Client Name: Merex

Project: CENCO

Received by: Dan

Date/Time Received: 2/9/11 1437

Delivered by : ☐ Client ☒ SunStar Courier ☐ GSO ☐ FedEx ☐ Other _____

Total number of coolers received 0

Temp criteria = 6°C > 0°C (no frozen containers)

Temperature: cooler #1 11.6 °C +/- the CF (- 0.2°C) = 11.4 °C corrected temperature

cooler #2 _____ °C +/- the CF (- 0.2°C) = _____ °C corrected temperature

cooler #3 _____ °C +/- the CF (- 0.2°C) = _____ °C corrected temperature

Samples outside temp. but received on ice, w/in 6 hours of final sampling.	☒ Yes	☐ No*	☐ N/A
Custody Seals Intact on Cooler/Sample	☐ Yes	☐ No*	☒ N/A
Sample Containers Intact	☒ Yes	☐ No*	
Sample labels match COC ID's	☒ Yes	☐ No*	
Total number of containers received match COC	☒ Yes	☐ No*	
Proper containers received for analyses requested on COC	☒ Yes	☐ No*	
Proper preservative indicated on COC/containers for analyses requested	☒ Yes	☐ No*	☐ N/A

Complete shipment received in good condition with correct temperatures, containers, labels, volumes preservatives and within method specified holding times. ☒ **Yes** ☐ **No***

* Complete Non-Conformance Receiving Sheet if checked

Cooler/Sample Review - Initials and date BC 2/9/11

Comments:

SunStar Laboratories, Inc.
PROVIDING QUALITY ANALYTICAL SERVICES NATIONWIDE

25712 Commercentre Drive
Lake Forest, California 92630
949.297.5020 Phone
949.297.5027 Fax

15 February 2011

Jeremy Squire
Murex
2640 Walnut Ave. Unit F
Tustin, CA 92780

RE: Cenco

Enclosed are the results of analyses for samples received by the laboratory on 02/14/11 14:47. If you have any questions concerning this report, please feel free to contact me.

Sincerely,

Daniel Chavez
Project Manager

SunStar Laboratories, Inc.
PROVIDING QUALITY ANALYTICAL SERVICES NATIONWIDE

25712 Commercentre Drive
Lake Forest, California 92630
949.297.5020 Phone
949.297.5027 Fax

Murex	Project: Cenco	
2640 Walnut Ave. Unit F	Project Number: 1003-001-300	**Reported:**
Tustin CA, 92780	Project Manager: Jeremy Squire	02/15/11 17:37

ANALYTICAL REPORT FOR SAMPLES

Sample ID	Laboratory ID	Matrix	Date Sampled	Date Received
LL_MW714_021411	T110161-01	Water	02/14/11 09:30	02/14/11 14:47
LL_MW715_021411	T110161-02	Water	02/14/11 11:45	02/14/11 14:47
TB_021411	T110161-03	Water	02/14/11 00:00	02/14/11 14:47

SunStar Laboratories, Inc.

The results in this report apply to the samples analyzed in accordance with the chain of custody document. This analytical report must be reproduced in its entirety.

Daniel Chavez, Project Manager

SunStar Laboratories, Inc.
Providing Quality Analytical Services Nationwide

25712 Commercentre Drive
Lake Forest, California 92630
949.297.5020 Phone
949.297.5027 Fax

Murex	Project: Cenco	
2640 Walnut Ave. Unit F	Project Number: 1003-001-300	**Reported:**
Tustin CA, 92780	Project Manager: Jeremy Squire	02/15/11 17:37

LL_MW714_021411

T110161-01 (Water)

Analyte	Result	Reporting Limit	Units	Dilution	Batch	Prepared	Analyzed	Method	Notes
SunStar Laboratories, Inc.									
Purgeable Petroleum Hydrocarbons by EPA 8015C									
C6-C12 (GRO)	**370**	50	ug/l	1	1021502	02/15/11	02/15/11	EPA 8015C	
Surrogate 4-Bromofluorobenzene		*82.5 %*	*72.6-146*		"	"	"	"	
Volatile Organic Compounds by EPA Method 8260B									
Bromobenzene	ND	1.0	ug/l	1	1021501	02/15/11	02/15/11	EPA 8260B	
Bromochloromethane	ND	1.0	"	"	"	"	"	"	
Bromodichloromethane	ND	1.0	"	"	"	"	"	"	
Bromoform	ND	1.0	"	"	"	"	"	"	
Bromomethane	ND	1.0	"	"	"	"	"	"	
n-Butylbenzene	ND	1.0	"	"	"	"	"	"	
sec-Butylbenzene	**4.4**	1.0	"	"	"	"	"	"	
tert-Butylbenzene	**1.2**	1.0	"	"	"	"	"	"	
Carbon tetrachloride	ND	0.50	"	"	"	"	"	"	
Chlorobenzene	ND	1.0	"	"	"	"	"	"	
Chloroethane	ND	1.0	"	"	"	"	"	"	
Chloroform	ND	1.0	"	"	"	"	"	"	
Chloromethane	ND	1.0	"	"	"	"	"	"	
2-Chlorotoluene	ND	1.0	"	"	"	"	"	"	
4-Chlorotoluene	ND	1.0	"	"	"	"	"	"	
Dibromochloromethane	ND	1.0	"	"	"	"	"	"	
1,2-Dibromo-3-chloropropane	ND	1.0	"	"	"	"	"	"	
1,2-Dibromoethane (EDB)	ND	1.0	"	"	"	"	"	"	
Dibromomethane	ND	1.0	"	"	"	"	"	"	
1,2-Dichlorobenzene	ND	1.0	"	"	"	"	"	"	
1,3-Dichlorobenzene	ND	1.0	"	"	"	"	"	"	
1,4-Dichlorobenzene	ND	1.0	"	"	"	"	"	"	
Dichlorodifluoromethane	ND	0.50	"	"	"	"	"	"	
1,1-Dichloroethane	ND	1.0	"	"	"	"	"	"	
1,2-Dichloroethane	ND	0.50	"	"	"	"	"	"	
1,1-Dichloroethene	ND	1.0	"	"	"	"	"	"	
cis-1,2-Dichloroethene	ND	1.0	"	"	"	"	"	"	
trans-1,2-Dichloroethene	ND	1.0	"	"	"	"	"	"	

SunStar Laboratories, Inc.

The results in this report apply to the samples analyzed in accordance with the chain of custody document. This analytical report must be reproduced in its entirety.

Daniel Chavez, Project Manager

SunStar Laboratories, Inc.
Providing Quality Analytical Services Nationwide

25712 Commercentre Drive
Lake Forest, California 92630
949.297.5020 Phone
949.297.5027 Fax

Murex	Project: Cenco	
2640 Walnut Ave. Unit F	Project Number: 1003-001-300	**Reported:**
Tustin CA, 92780	Project Manager: Jeremy Squire	02/15/11 17:37

LL_MW714_021411

T110161-01 (Water)

SunStar Laboratories, Inc.

Volatile Organic Compounds by EPA Method 8260B

Analyte	Result	Reporting Limit	Units	Dilution	Batch	Prepared	Analyzed	Method	Notes
1,2-Dichloropropane	ND	1.0	ug/l	1	1021501	02/15/11	02/15/11	EPA 8260B	
1,3-Dichloropropane	ND	1.0	"	"	"	"	"	"	
2,2-Dichloropropane	ND	1.0	"	"	"	"	"	"	
1,1-Dichloropropene	ND	1.0	"	"	"	"	"	"	
cis-1,3-Dichloropropene	ND	0.50	"	"	"	"	"	"	
trans-1,3-Dichloropropene	ND	0.50	"	"	"	"	"	"	
Hexachlorobutadiene	ND	1.0	"	"	"	"	"	"	
Isopropylbenzene	**14**	1.0	"	"	"	"	"	"	
p-Isopropyltoluene	ND	1.0	"	"	"	"	"	"	
Methylene chloride	ND	1.0	"	"	"	"	"	"	
Naphthalene	ND	1.0	"	"	"	"	"	"	
n-Propylbenzene	**5.4**	1.0	"	"	"	"	"	"	
Styrene	ND	1.0	"	"	"	"	"	"	
1,1,2,2-Tetrachloroethane	ND	1.0	"	"	"	"	"	"	
1,1,1,2-Tetrachloroethane	ND	1.0	"	"	"	"	"	"	
Tetrachloroethene	ND	1.0	"	"	"	"	"	"	
1,2,3-Trichlorobenzene	ND	1.0	"	"	"	"	"	"	
1,2,4-Trichlorobenzene	ND	1.0	"	"	"	"	"	"	
1,1,2-Trichloroethane	ND	1.0	"	"	"	"	"	"	
1,1,1-Trichloroethane	ND	1.0	"	"	"	"	"	"	
Trichloroethene	ND	1.0	"	"	"	"	"	"	
Trichlorofluoromethane	ND	1.0	"	"	"	"	"	"	
1,2,3-Trichloropropane	ND	1.0	"	"	"	"	"	"	
1,3,5-Trimethylbenzene	ND	1.0	"	"	"	"	"	"	
1,2,4-Trimethylbenzene	ND	1.0	"	"	"	"	"	"	
Vinyl chloride	ND	1.0	"	"	"	"	"	"	
Benzene	**1.3**	0.50	"	"	"	"	"	"	
Toluene	ND	0.50	"	"	"	"	"	"	
Ethylbenzene	ND	0.50	"	"	"	"	"	"	
m,p-Xylene	ND	1.0	"	"	"	"	"	"	
o-Xylene	ND	0.50	"	"	"	"	"	"	
Tert-amyl methyl ether	ND	2.0	"	"	"	"	"	"	

SunStar Laboratories, Inc.

The results in this report apply to the samples analyzed in accordance with the chain of custody document. This analytical report must be reproduced in its entirety.

Daniel Chavez, Project Manager

SunStar Laboratories, Inc.
PROVIDING QUALITY ANALYTICAL SERVICES NATIONWIDE

25712 Commercentre Drive
Lake Forest, California 92630
949.297.5020 Phone
949.297.5027 Fax

Murex	Project: Cenco	
2640 Walnut Ave. Unit F	Project Number: 1003-001-300	**Reported:**
Tustin CA, 92780	Project Manager: Jeremy Squire	02/15/11 17:37

LL_MW714_021411

T110161-01 (Water)

SunStar Laboratories, Inc.

Volatile Organic Compounds by EPA Method 8260B

Analyte	Result	Reporting Limit	Units	Dilution	Batch	Prepared	Analyzed	Method	Notes
Tert-butyl alcohol	ND	10	ug/l	1	1021501	02/15/11	02/15/11	EPA 8260B	
Di-isopropyl ether	ND	2.0	"	"	"	"	"	"	
Ethyl tert-butyl ether	ND	2.0	"	"	"	"	"	"	
Methyl tert-butyl ether	**10**	1.0	"	"	"	"	"	"	
1,1,2-trichloro-1,2,2-trifluoroethane (CFC 113)	ND	5.0	"	"	"	"	"	"	
Surrogate 4-Bromofluorobenzene		*97.9 %*	*77.1-110*		"	"	"	"	
Surrogate Dibromofluoromethane		*76.8 %*	*66.3-111*		"	"	"	"	
Surrogate Toluene-d8		*100 %*	*84.7-109*		"	"	"	"	

SunStar Laboratories, Inc.

The results in this report apply to the samples analyzed in accordance with the chain of custody document. This analytical report must be reproduced in its entirety.

Daniel Chavez, Project Manager

SunStar Laboratories, Inc.
Providing Quality Analytical Services Nationwide

25712 Commercentre Drive
Lake Forest, California 92630
949.297.5020 Phone
949.297.5027 Fax

Murex	Project: Cenco	
2640 Walnut Ave. Unit F	Project Number: 1003-001-300	**Reported:**
Tustin CA, 92780	Project Manager: Jeremy Squire	02/15/11 17:37

LL_MW715_021411

T110161-02 (Water)

Analyte	Result	Reporting Limit	Units	Dilution	Batch	Prepared	Analyzed	Method	Notes
SunStar Laboratories, Inc.									
Purgeable Petroleum Hydrocarbons by EPA 8015C									
C6-C12 (GRO)	**2000**	50	ug/l	1	1021502	02/15/11	02/15/11	EPA 8015C	
Surrogate 4-Bromofluorobenzene		*80.9 %*	*72.6-146*		"	"	"	"	
Volatile Organic Compounds by EPA Method 8260B									
Bromobenzene	ND	1.0	ug/l	1	1021501	02/15/11	02/15/11	EPA 8260B	
Bromochloromethane	ND	1.0	"	"	"	"	"	"	
Bromodichloromethane	ND	1.0	"	"	"	"	"	"	
Bromoform	ND	1.0	"	"	"	"	"	"	
Bromomethane	ND	1.0	"	"	"	"	"	"	
n-Butylbenzene	ND	1.0	"	"	"	"	"	"	
sec-Butylbenzene	**2.2**	1.0	"	"	"	"	"	"	
tert-Butylbenzene	**1.9**	1.0	"	"	"	"	"	"	
Carbon tetrachloride	ND	0.50	"	"	"	"	"	"	
Chlorobenzene	ND	1.0	"	"	"	"	"	"	
Chloroethane	ND	1.0	"	"	"	"	"	"	
Chloroform	ND	1.0	"	"	"	"	"	"	
Chloromethane	ND	1.0	"	"	"	"	"	"	
2-Chlorotoluene	ND	1.0	"	"	"	"	"	"	
4-Chlorotoluene	ND	1.0	"	"	"	"	"	"	
Dibromochloromethane	ND	1.0	"	"	"	"	"	"	
1,2-Dibromo-3-chloropropane	ND	1.0	"	"	"	"	"	"	
1,2-Dibromoethane (EDB)	ND	1.0	"	"	"	"	"	"	
Dibromomethane	ND	1.0	"	"	"	"	"	"	
1,2-Dichlorobenzene	ND	1.0	"	"	"	"	"	"	
1,3-Dichlorobenzene	ND	1.0	"	"	"	"	"	"	
1,4-Dichlorobenzene	ND	1.0	"	"	"	"	"	"	
Dichlorodifluoromethane	ND	0.50	"	"	"	"	"	"	
1,1-Dichloroethane	ND	1.0	"	"	"	"	"	"	
1,2-Dichloroethane	ND	0.50	"	"	"	"	"	"	
1,1-Dichloroethene	ND	1.0	"	"	"	"	"	"	
cis-1,2-Dichloroethene	**1.5**	1.0	"	"	"	"	"	"	
trans-1,2-Dichloroethene	ND	1.0	"	"	"	"	"	"	
1,2-Dichloropropane	ND	1.0	"	"	"	"	"	"	

SunStar Laboratories, Inc.

The results in this report apply to the samples analyzed in accordance with the chain of custody document. This analytical report must be reproduced in its entirety.

Daniel Chavez, Project Manager

SunStar Laboratories, Inc.
Providing Quality Analytical Services Nationwide

25712 Commercentre Drive
Lake Forest, California 92630
949.297.5020 Phone
949.297.5027 Fax

Murex	Project: Cenco	
2640 Walnut Ave. Unit F	Project Number: 1003-001-300	**Reported:**
Tustin CA, 92780	Project Manager: Jeremy Squire	02/15/11 17:37

LL_MW715_021411

T110161-02 (Water)

SunStar Laboratories, Inc.

Volatile Organic Compounds by EPA Method 8260B

Analyte	Result	Reporting Limit	Units	Dilution	Batch	Prepared	Analyzed	Method	Notes
1,3-Dichloropropane	ND	1.0	ug/l	1	1021501	02/15/11	02/15/11	EPA 8260B	
2,2-Dichloropropane	ND	1.0	"	"	"	"	"	"	
1,1-Dichloropropene	ND	1.0	"	"	"	"	"	"	
cis-1,3-Dichloropropene	ND	0.50	"	"	"	"	"	"	
trans-1,3-Dichloropropene	ND	0.50	"	"	"	"	"	"	
Hexachlorobutadiene	ND	1.0	"	"	"	"	"	"	
Isopropylbenzene	**4.9**	1.0	"	"	"	"	"	"	
p-Isopropyltoluene	ND	1.0	"	"	"	"	"	"	
Methylene chloride	ND	1.0	"	"	"	"	"	"	
Naphthalene	ND	1.0	"	"	"	"	"	"	
n-Propylbenzene	**1.0**	1.0	"	"	"	"	"	"	
Styrene	ND	1.0	"	"	"	"	"	"	
1,1,2,2-Tetrachloroethane	ND	1.0	"	"	"	"	"	"	
1,1,1,2-Tetrachloroethane	ND	1.0	"	"	"	"	"	"	
Tetrachloroethene	ND	1.0	"	"	"	"	"	"	
1,2,3-Trichlorobenzene	ND	1.0	"	"	"	"	"	"	
1,2,4-Trichlorobenzene	ND	1.0	"	"	"	"	"	"	
1,1,2-Trichloroethane	ND	1.0	"	"	"	"	"	"	
1,1,1-Trichloroethane	ND	1.0	"	"	"	"	"	"	
Trichloroethene	ND	1.0	"	"	"	"	"	"	
Trichlorofluoromethane	ND	1.0	"	"	"	"	"	"	
1,2,3-Trichloropropane	ND	1.0	"	"	"	"	"	"	
1,3,5-Trimethylbenzene	**4.2**	1.0	"	"	"	"	"	"	
1,2,4-Trimethylbenzene	**2.6**	1.0	"	"	"	"	"	"	
Vinyl chloride	ND	1.0	"	"	"	"	"	"	
Benzene	**480**	12	"	25	"	"	02/15/11	"	
Toluene	**12**	0.50	"	1	"	"	02/15/11	"	
Ethylbenzene	**1.7**	0.50	"	"	"	"	"	"	
m,p-Xylene	**24**	1.0	"	"	"	"	"	"	
o-Xylene	**7.4**	0.50	"	"	"	"	"	"	
Tert-amyl methyl ether	ND	2.0	"	"	"	"	"	"	
Tert-butyl alcohol	ND	10	"	"	"	"	"	"	
Di-isopropyl ether	ND	2.0	"	"	"	"	"	"	

SunStar Laboratories, Inc.

Daniel J Chavez

Daniel Chavez, Project Manager

The results in this report apply to the samples analyzed in accordance with the chain of custody document. This analytical report must be reproduced in its entirety.

SunStar Laboratories, Inc.
PROVIDING QUALITY ANALYTICAL SERVICES NATIONWIDE

25712 Commercentre Drive
Lake Forest, California 92630
949.297.5020 Phone
949.297.5027 Fax

Murex	Project: Cenco	
2640 Walnut Ave. Unit F	Project Number: 1003-001-300	**Reported:**
Tustin CA, 92780	Project Manager: Jeremy Squire	02/15/11 17:37

LL_MW715_021411

T110161-02 (Water)

Analyte	Result	Reporting Limit	Units	Dilution	Batch	Prepared	Analyzed	Method	Notes
SunStar Laboratories, Inc.									
Volatile Organic Compounds by EPA Method 8260B									
Ethyl tert-butyl ether	ND	2.0	ug/l	1	1021501	02/15/11	02/15/11	EPA 8260B	
Methyl tert-butyl ether	**2.8**	1.0	"	"	"	"	"	"	
1,1,2-trichloro-1,2,2-trifluoroethane (CFC 113)	ND	5.0	"	"	"	"	"	"	
Surrogate 4-Bromofluorobenzene		*96.8 %*	*77.1-110*		"	"	"	"	
Surrogate Dibromofluoromethane		*88.9 %*	*66.3-111*		"	"	"	"	
Surrogate Toluene-d8		*103 %*	*84.7-109*		"	"	"	"	

SunStar Laboratories, Inc.

The results in this report apply to the samples analyzed in accordance with the chain of custody document. This analytical report must be reproduced in its entirety.

Daniel Chavez, Project Manager

SunStar Laboratories, Inc.
Providing Quality Analytical Services Nationwide

25712 Commercentre Drive
Lake Forest, California 92630
949.297.5020 Phone
949.297.5027 Fax

Murex	Project: Cenco	
2640 Walnut Ave. Unit F	Project Number: 1003-001-300	**Reported:**
Tustin CA, 92780	Project Manager: Jeremy Squire	02/15/11 17:37

TB_021411

T110161-03 (Water)

SunStar Laboratories, Inc.

Volatile Organic Compounds by EPA Method 8260B

Analyte	Result	Reporting Limit	Units	Dilution	Batch	Prepared	Analyzed	Method	Notes
Bromobenzene	ND	1.0	ug/l	1	1021501	02/15/11	02/15/11	EPA 8260B	
Bromochloromethane	ND	1.0	"	"	"	"	"	"	
Bromodichloromethane	ND	1.0	"	"	"	"	"	"	
Bromoform	ND	1.0	"	"	"	"	"	"	
Bromomethane	ND	1.0	"	"	"	"	"	"	
n-Butylbenzene	ND	1.0	"	"	"	"	"	"	
sec-Butylbenzene	ND	1.0	"	"	"	"	"	"	
tert-Butylbenzene	ND	1.0	"	"	"	"	"	"	
Carbon tetrachloride	ND	0.50	"	"	"	"	"	"	
Chlorobenzene	ND	1.0	"	"	"	"	"	"	
Chloroethane	ND	1.0	"	"	"	"	"	"	
Chloroform	ND	1.0	"	"	"	"	"	"	
Chloromethane	ND	1.0	"	"	"	"	"	"	
2-Chlorotoluene	ND	1.0	"	"	"	"	"	"	
4-Chlorotoluene	ND	1.0	"	"	"	"	"	"	
Dibromochloromethane	ND	1.0	"	"	"	"	"	"	
1,2-Dibromo-3-chloropropane	ND	1.0	"	"	"	"	"	"	
1,2-Dibromoethane (EDB)	ND	1.0	"	"	"	"	"	"	
Dibromomethane	ND	1.0	"	"	"	"	"	"	
1,2-Dichlorobenzene	ND	1.0	"	"	"	"	"	"	
1,3-Dichlorobenzene	ND	1.0	"	"	"	"	"	"	
1,4-Dichlorobenzene	ND	1.0	"	"	"	"	"	"	
Dichlorodifluoromethane	ND	0.50	"	"	"	"	"	"	
1,1-Dichloroethane	ND	1.0	"	"	"	"	"	"	
1,2-Dichloroethane	ND	0.50	"	"	"	"	"	"	
1,1-Dichloroethene	ND	1.0	"	"	"	"	"	"	
cis-1,2-Dichloroethene	ND	1.0	"	"	"	"	"	"	
trans-1,2-Dichloroethene	ND	1.0	"	"	"	"	"	"	
1,2-Dichloropropane	ND	1.0	"	"	"	"	"	"	
1,3-Dichloropropane	ND	1.0	"	"	"	"	"	"	
2,2-Dichloropropane	ND	1.0	"	"	"	"	"	"	
1,1-Dichloropropene	ND	1.0	"	"	"	"	"	"	

SunStar Laboratories, Inc.

The results in this report apply to the samples analyzed in accordance with the chain of custody document. This analytical report must be reproduced in its entirety.

Daniel Chavez, Project Manager

SunStar Laboratories, Inc.
Providing Quality Analytical Services Nationwide

25712 Commercentre Drive
Lake Forest, California 92630
949.297.5020 Phone
949.297.5027 Fax

Murex	Project: Cenco	
2640 Walnut Ave. Unit F	Project Number: 1003-001-300	**Reported:**
Tustin CA, 92780	Project Manager: Jeremy Squire	02/15/11 17:37

TB_021411

T110161-03 (Water)

SunStar Laboratories, Inc.

Volatile Organic Compounds by EPA Method 8260B

Analyte	Result	Reporting Limit	Units	Dilution	Batch	Prepared	Analyzed	Method	Notes
cis-1,3-Dichloropropene	ND	0.50	ug/l	1	1021501	02/15/11	02/15/11	EPA 8260B	
trans-1,3-Dichloropropene	ND	0.50	"	"	"	"	"	"	
Hexachlorobutadiene	ND	1.0	"	"	"	"	"	"	
Isopropylbenzene	ND	1.0	"	"	"	"	"	"	
p-Isopropyltoluene	ND	1.0	"	"	"	"	"	"	
Methylene chloride	ND	1.0	"	"	"	"	"	"	
Naphthalene	ND	1.0	"	"	"	"	"	"	
n-Propylbenzene	ND	1.0	"	"	"	"	"	"	
Styrene	ND	1.0	"	"	"	"	"	"	
1,1,2,2-Tetrachloroethane	ND	1.0	"	"	"	"	"	"	
1,1,1,2-Tetrachloroethane	ND	1.0	"	"	"	"	"	"	
Tetrachloroethene	ND	1.0	"	"	"	"	"	"	
1,2,3-Trichlorobenzene	ND	1.0	"	"	"	"	"	"	
1,2,4-Trichlorobenzene	ND	1.0	"	"	"	"	"	"	
1,1,2-Trichloroethane	ND	1.0	"	"	"	"	"	"	
1,1,1-Trichloroethane	ND	1.0	"	"	"	"	"	"	
Trichloroethene	ND	1.0	"	"	"	"	"	"	
Trichlorofluoromethane	ND	1.0	"	"	"	"	"	"	
1,2,3-Trichloropropane	ND	1.0	"	"	"	"	"	"	
1,3,5-Trimethylbenzene	ND	1.0	"	"	"	"	"	"	
1,2,4-Trimethylbenzene	ND	1.0	"	"	"	"	"	"	
Vinyl chloride	ND	1.0	"	"	"	"	"	"	
Benzene	ND	0.50	"	"	"	"	"	"	
Toluene	ND	0.50	"	"	"	"	"	"	
Ethylbenzene	ND	0.50	"	"	"	"	"	"	
m,p-Xylene	ND	1.0	"	"	"	"	"	"	
o-Xylene	ND	0.50	"	"	"	"	"	"	
Tert-amyl methyl ether	ND	2.0	"	"	"	"	"	"	
Tert-butyl alcohol	ND	10	"	"	"	"	"	"	
Di-isopropyl ether	ND	2.0	"	"	"	"	"	"	
Ethyl tert-butyl ether	ND	2.0	"	"	"	"	"	"	
Methyl tert-butyl ether	ND	1.0	"	"	"	"	"	"	

SunStar Laboratories, Inc.

The results in this report apply to the samples analyzed in accordance with the chain of custody document. This analytical report must be reproduced in its entirety.

Daniel Chavez, Project Manager

SunStar Laboratories, Inc.
PROVIDING QUALITY ANALYTICAL SERVICES NATIONWIDE

25712 Commercentre Drive
Lake Forest, California 92630
949.297.5020 Phone
949.297.5027 Fax

Murex	Project: Cenco	
2640 Walnut Ave. Unit F	Project Number: 1003-001-300	**Reported:**
Tustin CA, 92780	Project Manager: Jeremy Squire	02/15/11 17:37

TB_021411

T110161-03 (Water)

Analyte	Result	Reporting Limit	Units	Dilution	Batch	Prepared	Analyzed	Method	Notes
SunStar Laboratories, Inc.									
Volatile Organic Compounds by EPA Method 8260B									
1,1,2-trichloro-1,2,2-trifluoroethane (CFC 113)	ND	5.0	ug/l	1	1021501	02/15/11	02/15/11	EPA 8260B	
Surrogate 4-Bromofluorobenzene		*98.6 %*	*77.1-110*		"	"	"	"	
Surrogate Dibromofluoromethane		*75.9 %*	*66.3-111*		"	"	"	"	
Surrogate Toluene-d8		*98.9 %*	*84.7-109*		"	"	"	"	

SunStar Laboratories, Inc.

Daniel J Chávez

Daniel Chavez, Project Manager

The results in this report apply to the samples analyzed in accordance with the chain of custody document. This analytical report must be reproduced in its entirety.

SunStar Laboratories, Inc.
PROVIDING QUALITY ANALYTICAL SERVICES NATIONWIDE

25712 Commercentre Drive
Lake Forest, California 92630
949.297.5020 Phone
949.297.5027 Fax

Murex	Project: Cenco	
2640 Walnut Ave. Unit F	Project Number: 1003-001-300	**Reported:**
Tustin CA, 92780	Project Manager: Jeremy Squire	02/15/11 17:37

Purgeable Petroleum Hydrocarbons by EPA 8015C - Quality Control

SunStar Laboratories, Inc.

Analyte	Result	Reporting Limit	Units	Spike Level	Source Result	%REC	%REC Limits	RPD	RPD Limit	Notes
Batch 1021502 - EPA 5030 GC										
Blank (1021502-BLK1)				Prepared & Analyzed: 02/15/11						
C6-C12 (GRO)	ND	50	ug/l							
Surrogate 4-Bromofluorobenzene	*153*		*"*	*200*		*76.7*	*72.6-146*			
LCS (1021502-BS1)				Prepared & Analyzed: 02/15/11						
C6-C12 (GRO)	5030	50	ug/l	5500		91.4	75-125			
Surrogate 4-Bromofluorobenzene	*174*		*"*	*200*		*87.2*	*72.6-146*			
LCS Dup (1021502-BSD1)				Prepared & Analyzed: 02/15/11						
C6-C12 (GRO)	5030	50	ug/l	5500		91.5	75-125	0.167	20	
Surrogate 4-Bromofluorobenzene	*172*		*"*	*200*		*86.2*	*72.6-146*			

SunStar Laboratories, Inc.

The results in this report apply to the samples analyzed in accordance with the chain of custody document. This analytical report must be reproduced in its entirety.

Daniel Chavez, Project Manager

SunStar Laboratories, Inc.
Providing Quality Analytical Services Nationwide

25712 Commercentre Drive
Lake Forest, California 92630
949.297.5020 Phone
949.297.5027 Fax

Murex	Project: Cenco	
2640 Walnut Ave. Unit F	Project Number: 1003-001-300	**Reported:**
Tustin CA, 92780	Project Manager: Jeremy Squire	02/15/11 17:37

Volatile Organic Compounds by EPA Method 8260B - Quality Control

SunStar Laboratories, Inc.

Analyte	Result	Reporting Limit	Units	Spike Level	Source Result	%REC	%REC Limits	RPD	RPD Limit	Notes
Batch 1021501 - EPA 5030 GCMS										
Blank (1021501-BLK1)				Prepared & Analyzed: 02/15/11						
Bromobenzene	ND	1.0	ug/l							
Bromochloromethane	ND	1.0	"							
Bromodichloromethane	ND	1.0	"							
Bromoform	ND	1.0	"							
Bromomethane	ND	1.0	"							
n-Butylbenzene	ND	1.0	"							
sec-Butylbenzene	ND	1.0	"							
tert-Butylbenzene	ND	1.0	"							
Carbon tetrachloride	ND	0.50	"							
Chlorobenzene	ND	1.0	"							
Chloroethane	ND	1.0	"							
Chloroform	ND	1.0	"							
Chloromethane	ND	1.0	"							
2-Chlorotoluene	ND	1.0	"							
4-Chlorotoluene	ND	1.0	"							
Dibromochloromethane	ND	1.0	"							
1,2-Dibromo-3-chloropropane	ND	1.0	"							
1,2-Dibromoethane (EDB)	ND	1.0	"							
Dibromomethane	ND	1.0	"							
1,2-Dichlorobenzene	ND	1.0	"							
1,3-Dichlorobenzene	ND	1.0	"							
1,4-Dichlorobenzene	ND	1.0	"							
Dichlorodifluoromethane	ND	0.50	"							
1,1-Dichloroethane	ND	1.0	"							
1,2-Dichloroethane	ND	0.50	"							
1,1-Dichloroethene	ND	1.0	"							
cis-1,2-Dichloroethene	ND	1.0	"							
trans-1,2-Dichloroethene	ND	1.0	"							
1,2-Dichloropropane	ND	1.0	"							
1,3-Dichloropropane	ND	1.0	"							
2,2-Dichloropropane	ND	1.0	"							
1,1-Dichloropropene	ND	1.0	"							
cis-1,3-Dichloropropene	ND	0.50	"							
trans-1,3-Dichloropropene	ND	0.50	"							
Hexachlorobutadiene	ND	1.0	"							
Isopropylbenzene	ND	1.0	"							

SunStar Laboratories, Inc.

The results in this report apply to the samples analyzed in accordance with the chain of custody document. This analytical report must be reproduced in its entirety.

Daniel Chavez, Project Manager

SunStar Laboratories, Inc.
Providing Quality Analytical Services Nationwide

25712 Commercentre Drive
Lake Forest, California 92630
949.297.5020 Phone
949.297.5027 Fax

Murex	Project: Cenco	
2640 Walnut Ave. Unit F	Project Number: 1003-001-300	**Reported:**
Tustin CA, 92780	Project Manager: Jeremy Squire	02/15/11 17:37

Volatile Organic Compounds by EPA Method 8260B - Quality Control

SunStar Laboratories, Inc.

Analyte	Result	Reporting Limit	Units	Spike Level	Source Result	%REC	%REC Limits	RPD	RPD Limit	Notes
Batch 1021501 - EPA 5030 GCMS										
Blank (1021501-BLK1)				Prepared & Analyzed: 02/15/11						
p-Isopropyltoluene	ND	1.0	ug/l							
Methylene chloride	ND	1.0	"							
Naphthalene	ND	1.0	"							
n-Propylbenzene	ND	1.0	"							
Styrene	ND	1.0	"							
1,1,2,2-Tetrachloroethane	ND	1.0	"							
1,1,1,2-Tetrachloroethane	ND	1.0	"							
Tetrachloroethene	ND	1.0	"							
1,2,3-Trichlorobenzene	ND	1.0	"							
1,2,4-Trichlorobenzene	ND	1.0	"							
1,1,2-Trichloroethane	ND	1.0	"							
1,1,1-Trichloroethane	ND	1.0	"							
Trichloroethene	ND	1.0	"							
Trichlorofluoromethane	ND	1.0	"							
1,2,3-Trichloropropane	ND	1.0	"							
1,3,5-Trimethylbenzene	ND	1.0	"							
1,2,4-Trimethylbenzene	ND	1.0	"							
Vinyl chloride	ND	1.0	"							
Benzene	ND	0.50	"							
Toluene	ND	0.50	"							
Ethylbenzene	ND	0.50	"							
m,p-Xylene	ND	1.0	"							
o-Xylene	ND	0.50	"							
Tert-amyl methyl ether	ND	2.0	"							
Tert-butyl alcohol	ND	10	"							
Di-isopropyl ether	ND	2.0	"							
Ethyl tert-butyl ether	ND	2.0	"							
Methyl tert-butyl ether	ND	1.0	"							
1,1,2-trichloro-1,2,2-trifluoroethane (CFC 113)	ND	5.0	"							
Surrogate 4-Bromofluorobenzene	*7.85*		*"*	*8.00*		*98.1*	*77.1-110*			
Surrogate Dibromofluoromethane	*6.22*		*"*	*8.00*		*77.8*	*66.3-111*			
Surrogate Toluene-d8	*7.87*		*"*	*8.00*		*98.4*	*84.7-109*			

SunStar Laboratories, Inc.

The results in this report apply to the samples analyzed in accordance with the chain of custody document. This analytical report must be reproduced in its entirety.

Daniel Chavez, Project Manager

SunStar Laboratories, Inc.
Providing Quality Analytical Services Nationwide

25712 Commercentre Drive
Lake Forest, California 92630
949.297.5020 Phone
949.297.5027 Fax

Murex	Project: Cenco	
2640 Walnut Ave. Unit F	Project Number: 1003-001-300	**Reported:**
Tustin CA, 92780	Project Manager: Jeremy Squire	02/15/11 17:37

Volatile Organic Compounds by EPA Method 8260B - Quality Control

SunStar Laboratories, Inc.

Analyte	Result	Reporting Limit	Units	Spike Level	Source Result	%REC	%REC Limits	RPD	RPD Limit	Notes
Batch 1021501 - EPA 5030 GCMS										
LCS (1021501-BS1)				Prepared & Analyzed: 02/15/11						
Chlorobenzene	23.4	1.0	ug/l	20.0		117	75-125			
1,1-Dichloroethene	18 9	1.0	"	20.0		94.6	75-125			
Trichloroethene	17 9	1.0	"	20.0		89.6	75-125			
Benzene	21.4	0.50	"	20.0		107	75-125			
Toluene	21 9	0.50	"	20.0		109	75-125			
Surrogate 4-Bromofluorobenzene	*7.88*		*"*	*8.00*		*98.5*	*77.1-110*			
Surrogate Dibromofluoromethane	*5.68*		*"*	*8.00*		*71.0*	*66.3-111*			
Surrogate Toluene-d8	*8.09*		*"*	*8.00*		*101*	*84.7-109*			
LCS Dup (1021501-BSD1)				Prepared & Analyzed: 02/15/11						
Chlorobenzene	24 2	1.0	ug/l	20.0		121	75-125	3.32	20	
1,1-Dichloroethene	19.8	1.0	"	20.0		99.1	75-125	4.59	20	
Trichloroethene	18.4	1.0	"	20.0		91.9	75-125	2.59	20	
Benzene	21.7	0.50	"	20.0		108	75-125	1.49	20	
Toluene	22 3	0.50	"	20.0		111	75-125	1.86	20	
Surrogate 4-Bromofluorobenzene	*8.24*		*"*	*8.00*		*103*	*77.1-110*			
Surrogate Dibromofluoromethane	*6.01*		*"*	*8.00*		*75.1*	*66.3-111*			
Surrogate Toluene-d8	*8.02*		*"*	*8.00*		*100*	*84.7-109*			

SunStar Laboratories, Inc.

The results in this report apply to the samples analyzed in accordance with the chain of custody document. This analytical report must be reproduced in its entirety.

Daniel Chavez, Project Manager

SunStar Laboratories, Inc.
PROVIDING QUALITY ANALYTICAL SERVICES NATIONWIDE

25712 Commercentre Drive
Lake Forest, California 92630
949.297.5020 Phone
949.297.5027 Fax

Murex	Project: Cenco	
2640 Walnut Ave. Unit F	Project Number: 1003-001-300	**Reported:**
Tustin CA, 92780	Project Manager: Jeremy Squire	02/15/11 17:37

Notes and Definitions

DET	Analyte DETECTED
ND	Analyte NOT DETECTED at or above the reporting limit
NR	Not Reported
dry	Sample results reported on a dry weight basis
RPD	Relative Percent Difference

SunStar Laboratories, Inc.

The results in this report apply to the samples analyzed in accordance with the chain of custody document. This analytical report must be reproduced in its entirety.

Daniel Chavez, Project Manager

SunStar Laboratories, Inc.
25712 Commercentre Dr
Lake Forest, CA 92630
949-297-5020

Chain of Custody Record

Client: Murex Environmental, Inc.
Address: 2640 Walnut Ave, Unit F
Phone: (714) 508-0800 Fax: (714) 508-0880
Project Manager: Jeremy Squire (714) 604-5836

Date: 2·14·2011 Page: 1 Of 1
Project Name: CENCO
Collector: F. Sosic Client Project #: 1003-001-300
Batch #: T110161 EDF #:

Sample ID	Date Sampled	Time	Sample Type	8260 (VOCs NO OXY)	8260 + OXY	1,4-Dioxane	8270 Semi-Volatiles (PAHs, etc)	8021 BTEX	8015M (TPH gasoline)	8015M (TPH diesel)	Hexavalent Chromium (7199)	6010/7000 Title 22 Metals	PCBs				Total # of containers	Comments/Preservative	Laboratory ID #
LL_MW714_021411	2.14.2011	0930	GW		X				X								6		01
LL_MW715_021411	2.14.2011	1145	GW		X				X								6		02
TB_021411			Water		X												2		03

Relinquished by: (signature)	Date / Time	Received by: (signat	Date / Time
[signature]	2.14.2011 1447	[signature]	2/14/11 1447
Relinquished by: (signature)	Date / Time	Received by: (signat	Date / Time
Relinquished by: (signature)	Date / Time	Received by: (signat	Date / Time

Total # of containers	14
Chain of Custody seals	N
Seals intact? Y/N/NA	N/A
Received good condition/cold	Y
Turn around time:	

Notes
2.0°

Sample disposal Instructions: Disposal @ $2.00 each ____ Return to client ____ Pickup ____

SunStar Laboratories, Inc.
PROVIDING QUALITY ANALYTICAL SERVICES NATIONWIDE

SAMPLE RECEIVING REVIEW SHEET

BATCH # T110161

Client Name: MUREX Project: CENCO

Received by: DAN Date/Time Received: 2/14/11 1447

Delivered by : ☐ Client ☒ SunStar Courier ☐ GSO ☐ FedEx ☐ Other _____

Total number of coolers received 0 **Temp criteria = 6°C > 0°C (no frozen containers)**

Temperature: cooler #1 2.2 °C +/- the CF (- 0.2°C) = 2.0 °C corrected temperature

cooler #2 _____ °C +/- the CF (- 0.2°C) = _____ °C corrected temperature

cooler #3 _____ °C +/- the CF (- 0.2°C) = _____ °C corrected temperature

Samples outside temp. but received on ice, w/in 6 hours of final sampling.	☒ Yes	☐ No*	☐ N/A
Custody Seals Intact on Cooler/Sample	☐ Yes	☐ No*	☒ N/A
Sample Containers Intact	☒ Yes	☐ No*	
Sample labels match COC ID's	☒ Yes	☐ No*	
Total number of containers received match COC	☒ Yes	☐ No*	
Proper containers received for analyses requested on COC	☒ Yes	☐ No*	
Proper preservative indicated on COC/containers for analyses requested	☒ Yes	☐ No*	☐ N/A

Complete shipment received in good condition with correct temperatures, containers, labels, volumes preservatives and within method specified holding times. ☒ **Yes** ☐ **No***

* Complete Non-Conformance Receiving Sheet if checked Cooler/Sample Review - Initials and date BC 2/14/11

Comments: