SDMS DOC ID# 1118372

Waste
950.27.11

CATELLUS.

January 17, 1991

Mr. Carl Sjoberg
Chief of Industrial Waste Planning Control
County of Los Angeles, Department of Public Works
Waste Management Division
P.O. Box 1460
Alhambra, CA 91802-1460

100570
MDE

RE: Former Chrysler New Car Preparation Plant
12140 Slauson Avenue
Santa Fe Springs, California

Dear Mr. Sjoberg:

This letter and the attached data from Converse Environmental Consultants ("Converse") are submitted on behalf of Catellus Development Corporation ("Catellus"), the owner of the real property at 12140 Slauson Avenue in Santa Fe Springs, California (the "Property"). The purpose of this letter is to inform you of the recent discovery of halogenated, aromatic and other petroleum hydrocarbons in soil and groundwater at the Property. We previously sent a similar letter (attached) to the Regional Water Quality Control Board and the Los Angeles County Department of Health Services. Tom Kinger of LA County suggested that we also notify your agency.

Catellus and its predecessors have owned the Property for more than 25 years. In the early 1960's, General Motors leased the Property for purposes of conducting car preparation operations. In 1967, Chrysler Corporation began leasing the Property for the same new car preparation purposes. Chrysler's lease was terminated in 1988.

While conducting an environmental due diligence investigation preliminary to construction on the Property, Catellus' environmental consultant, Converse, found stained soils directly beneath and extending outward from the site of a former underground concrete "clarifier" installed and operated by Chrysler. The clarifier was reportedly used by Chrysler in conjunction with Chrysler's auto body repair shop. The underground clarifier was removed by Chrysler in 1988.

CATELLUS DEVELOPMENT CORPORATION
201 MISSION STREET, 30TH FLOOR · SAN FRANCISCO, CALIFORNIA 94105 · TEL 415 974-4500 FAX 415 974-4613

As a result of the discovery of visibly stained soils with a chemical odor, Converse installed soil borings beneath and adjacent to the former clarifier site. The analytical results indicated the presence of halogenated and petroleum hydrocarbons in the soil. Converse subsequently installed three groundwater monitoring wells, two upgradient of the clarifier site and one downgradient. All three wells (including the upgradient wells) revealed the presence of 1, 1 - Dichloroethene, Tetrachloroethene, Trichloroethene, and other chemicals in the groundwater. After obtaining these groundwater data, Converse installed and obtained samples from four additional groundwater monitoring wells. The results of the soil and groundwater sampling conducted by Converse are contained in the attachment.

Based on the investigation performed by Converse, it appears that operations by Chrysler are the cause of the halogenated, aromatic and other petroleum hydrocarbons in soil directly beneath and extending outward from the location of the former clarifier. Converse has concluded that groundwater has been impacted by the chemicals found in the soil.

We have asked Converse to prepare a workplan which contains specific recommendations for further site characterization work. As soon as this workplan is prepared, we will send you a copy for review and comment. In the interim, we would be pleased to meet with you or your staff to discuss our findings.

If you have any questions or need further information, please do not hesitate to call me at (415) 974-4617.

Sincerely,

Ric Notini

Ric Notini
Director of Environmental Services

RLN/enm.sjobergi

Attachments - 2

cc: Mr. Tom Klinger
Supervisor, Site Mitigation Units
Hazardous Materials Control Program
Los Angeles County Department of Health Services
2615 S. Grnad Avenue, Room 607
Los Angeles, CA 90007

CATELLUS

1/14/91

JAN 1991 RECEIVED Hazardous Materials Control Program

January 4, 1991

Mr. Robert Ghirelli
Executive Officer
Regional Water Quality Control Board
for the Los Angeles Region
101 Centre Plaza Drive
Monterey Park, CA 91754

Mr. William Jones, Chief
Enforcement/Site Mitigation Units
Hazardous Materials Control Program
Los Angeles County Department
of Health Services
2615 S. Grand Avenue, Room 607
Los Angles, CA 90007

Tom -
Looks like a
Water Board site
Bill
1-10-91

RE: Former Chrysler New Car Preparation Plant
12140 Slauson Avenue
Santa Fe Springs, California

Gentlemen:

This letter and the attached data from Converse Environmental Consultants ("Converse") are submitted on behalf of Catellus Development Corporation ("Catellus"), the owner of the real property at 12140 Slauson Avenue in Santa Fe Springs, California (the "Property"). The purpose of this letter is to inform you of the recent discovery of halogenated, aromatic and other petroleum hydrocarbons in soil and groundwater at the Property.

Catellus and its predecessors have owned the Property for more than 25 years. In the early 1960's, General Motors leased the Property for purposes of conducting car preparation operations. In 1967, Chrysler Corporation began leasing the Property for the same new car preparation purposes. Chrysler's lease was terminated in 1988.

While conducting an environmental due diligence investigation preliminary to construction on the Property, Catellus' environmental consultant, Converse, found stained soils directly beneath and extending outward from the site of a former underground concrete "clarifier" installed and operated by Chrysler. The clarifier was reportedly used by Chrysler in conjunction with Chrysler's auto body repair shop. The underground clarifier was removed by Chrysler in 1988.

Pab Who?

CATELLUS DEVELOPMENT CORPORATION
201 MISSION STREET, 30TH FLOOR · SAN FRANCISCO, CALIFORNIA 94105 · TEL 415 974-4500 FAX 415 974-4613

As a result of the discovery of visibly stained soils with a chemical odor, Converse installed soil borings beneath and adjacent to the former clarifier site. The analytical results indicated the presence of halogenated and petroleum hydrocarbons in the soil. Converse subsequently installed three groundwater monitoring wells, two upgradient of the clarifier site and one downgradient. All three wells (including the upgradient wells) revealed the presence of 1, 1 - Dichloroethene, Tetrachloroethene, Trichloroethene, and other chemicals in the groundwater. After obtaining these groundwater data, Converse installed and obtained samples from four additional groundwater monitoring wells. The results of the soil and groundwater sampling conducted by Converse are contained in the attachment.

Based on the investigation performed by Converse, it appears that operations by Chrysler are the cause of the halogenated, aromatic and other petroleum hydrocarbons in soil directly beneath and extending outward from the location of the former clarifier. Converse has concluded that groundwater has been impacted by the chemicals found in the soil.

We have asked Converse to prepare a workplan which contains specific recommendations for further site characterization work. As soon as this workplan is prepared, we will send you a copy for review and comment. In the interim, we would be pleased to meet with you or your staff to discuss our findings.

If you have any questions or need further information, please do not hesitate to call me at (415) 974-4617.

Sincerely,

Ric Notini

Ric Notini
Director of Environmental Services

RLN/enm.ghirelli

Attachment

cc: Mr. Jerry Schimke, Chief
Hazardous Materials
Office of Emergency Services
2800 Meadowview Road
Sacramento, CA 95832

CONVERSE ENVIRONMENTAL WEST

3393 East Foothill Boulevard, Suite B
Pasadena, California 91107-3112

Telephone (818) 796-8200
FAX (818) 351-1060

1/14/91

December 28, 1990

RP.

David J. Dyke
Construction Manager
Catellus Development Corporation
3230 East Imperial Highway
Suite 100
Brea, California 92621

Subject: PRELIMINARY REPORT
SOIL AND GROUND WATER INVESTIGATION
Former Chrysler New Car Preparation Plant
12140 Slauson Avenue
Santa Fe Springs, California
CEW Project No. 89-41-130-03

Dear Mr. Dyke:

This letter presents the preliminary results of a soil and ground water investigation recently conducted at the former Chrysler New Car Preparation plant in Santa Fe Springs, California. The work was conducted as a result of the discovery of halogenated hydrocarbons in subsurface soil directly beneath and in the vicinity of a former clarifier used by Chrysler in conjunction with Chrysler's auto body repair shop (see Figure 1). The clarifier was removed by Chrysler in 1988.

Two phases of work were conducted to investigate the chemicals in soil and ground water beneath and in the vicinity of the removed clarifier. The two phases involved the following: 1) the drilling and sampling of twelve soil borings beneath and in the vicinity of the removed clarifier to investigate the nature, source and extent of chemicals in the soil; and 2) the installation and sampling of three ground water monitoring wells (MW-1 through MW-3). After discovering elevated levels of halogenated hydrocarbons in the ground water, a second phase of work was initiated which entailed the installation of four additional ground water monitoring wells (MW-4 through MW-7) to further define the nature, source and extent of the chemicals in the ground water.

SCOPE OF SOIL AND GROUND WATER INVESTIGATION

In the course of performing an environmental due diligence for the property, elevated levels of halogenated hydrocarbons were discovered in soil beneath and in the vicinity of the clarifier previously removed by Chrysler. The clarifier location was confirmed by a licensed land surveyor who surveyed the area where soil was affected by the hydrocarbon compounds

and superimposed the location on a scaled aerial photograph of the site (see Figure 5). The discovery of halogenated compounds prompted the drilling and sampling of twelve additional soil borings (BH-9A through 9L) to investigate the nature, source and extent of the chemicals in soils associated with the removed clarifier (see Figure 2). In the course of drilling these soil borings, dark green to black visibly-stained soil with a chemical odor was identified beneath and in the vicinity of the removed clarifier. This discovery resulted in the excavation of soil beneath the clarifier in an attempt to remove the visibly stained soil and define its nature, source and extent (see Figure 2 for the limits of the excavation and location of soil borings). The visual extent of the stained soil at this location appeared to be confined to an area approximately 25'x 25'. and to a depth of 33 feet at which point ground water was encountered. Soil samples were collected from within the excavation to characterize the stained soil. The results of these analysis are presented in Table 4 and the locations of the soil samples are shown in Figure 4.

Following the discovery of chemicals in soil directly beneath and extending outward from the location of the removed clarifier, three ground water monitoring wells (GW-1,-2,-3) were installed to evaluate ground water conditions. Results of this initial ground water sampling indicated the presence of halogenated hydrocarbon compounds in the ground water. This discovery led to the installation of 4 additional monitoring wells (GW-4 through GW-7) to further evaluate the nature, source and extent of the chemicals in ground water (see Figure 1 for monitoring well locations).

WELL CONSTRUCTION

Ground water monitoring wells were installed using a truck mounted hollow stem auger drill rig. Soil sampling was conducted at 5-foot intervals in wells GW-1,-2,-3, and -5 for geologic logging. Continuous cores were collected from monitoring wells GW-4, -6,and -7. The wells were installed to a depth of approximately 50 feet below grade and consisted of 4-inch PVC, slotted from approximately 30 feet to 50 feet below grade with a gravel pack extending from the bottom of the well to 25 feet below grade. A bentonite seal was placed from the top of the sand pack to ground surface. The well was completed with either a flush mounted or monument type locking well head (see Appendix A for a complete description of the drilling, sampling and well completion procedures).

SOIL AND GROUND WATER CONDITIONS

Soils encountered during drilling consisted of primarily silt and clay to a depth of 25 to 40 feet below grade. Below the silt and clay a clear change in lithology was observed, marking the top of a conductive water-bearing sand. The depth to the sand varied from 25 to 40 feet beneath the site (see Generalized Geologic Cross Section A-A', Figure 3).

During the exploratory drilling and excavation, a backfilled area was encountered directly beneath and extending outward from the location of the former clarifier. The backfill, consisting of pea gravel, extended laterally approximately 15'x 15' and vertically to a depth of approximately 25 feet below grade.

Ground water was encountered at a depth of approximately 33 feet below grade as measured in the ground water monitoring wells. Based upon ground water depth measurements and surveyed wellhead elevations, the ground water flow direction beneath the site is to the south/south west (see flow direction shown on Figure 1). The estimated hydraulic gradient is .0025 feet/foot.

ANALYTICAL RESULTS

Soil samples collected from beneath and in the vicinity of the removed clarifier were analyzed for halogenated and aromatic compounds via EPA test methods 8010 and 8020, respectively, and some of the samples were also analyzed for total petroleum hydrocarbons (TPH) by EPA method 418.1. Ground water samples were analyzed for aromatic and halogenated compounds via EPA test methods 602 and 601 respectively. The results of the soil and water sampling are tabulated in Tables 1, 2, 3 and 4.

Results of soil analyses detected the presence of halogenated hydrocarbons (primarily DCE, PCE and TCE), aromatic compounds (benzene, toluene, xylene and ethylbenzene) and TPH beneath and extending outward from the location of the removed clarifier to a depth where ground water was first encountered (see Table 1 and Figure 2). Results of ground water analyses detected the presence of halogenated compounds (primarily PCE, DCE, TCE and trichlorofluoromethane) as shown in Table 3.

Soil samples were also collected from the dark green to black soil layer beneath and in the vicinity of the removed clarifier and analyzed for TPH. TPH was detected at concentrations of up to 18,000 ppm at a depth of 22 feet below grade. In these samples PCE, DCE, ethylbenzene and xylene in the parts per million (ppm) range were also detected. The analytical results are presented in Table 4 and the soil sampling locations are shown in Figure 4.

CONCLUSIONS

The preliminary results of this investigation indicate the presence of halogenated, aromatic and other petroleum hydrocarbons in the soil directly beneath and extending outward from the location of the removed clarifier to a depth where ground water was first encountered (see Figure 3). Concentrations of the halogenated hydrocarbons PCE, DCE, and TCE,

detected in monitoring wells GW-3 and GW-7 down-gradient of the removed clarifier, were greater than concentrations of the same compounds detected in monitoring wells GW-1, GW-4 and GW-5 up-gradient from the removed clarifier. Based upon our review and interpretation of the soil and ground water data, it is CEW's opinion that ground water has been impacted by chemicals directly beneath and extending outward from the location of the removed clarifier.

RECOMMENDATIONS

To further define the nature, source and extent of the halogenated, aromatic and other petroleum hydrocarbon chemicals associated with the former clarifier location, CEW recommends the installation of four additional ground water monitoring wells on the site (see Figure 1 for proposed well locations). Additional soil borings will be drilled to facilitate collection of soil samples in the vicinity of the removed clarifier to further define the extent of chemicals in soil. This information should be used to design and implement appropriate remedial measures.

If you have any questions regarding the content of this preliminary report please call us at (818) 796-8200.

Sincerely,

CONVERSE ENVIRONMENTAL WEST

Hugh A. Rose, REA
Project Director

Richard Walls, PE
Principal Environmental Engineer

Attachments:

- Figure 1- Site Plan with Soil Boring and Well Locations
- Figure 2- Area A Detail
- Figure 3- Generalized Geologic Cross Section A-A'
- Figure 4- Area A Detail With Excavation Soil Sample Locations
- Figure 5- Aerial Photograph of Former Clarifier and Excavation
- Table 1- Analytical Results of Soil Samples
- Table 2- Analytical Results of Soil Samples
- Table 3- Analytical Results of Ground Water Samples
- Table 4- Analytical Results of Stockpile and Excavation Soil Samples
- Table 5- Analytical Results of QA/QC samples

Appendix A: Methods of Investigation
Appendix B: Laboratory Analytical Results
Appendix C: Ground Water Monitoring Well Diagrams

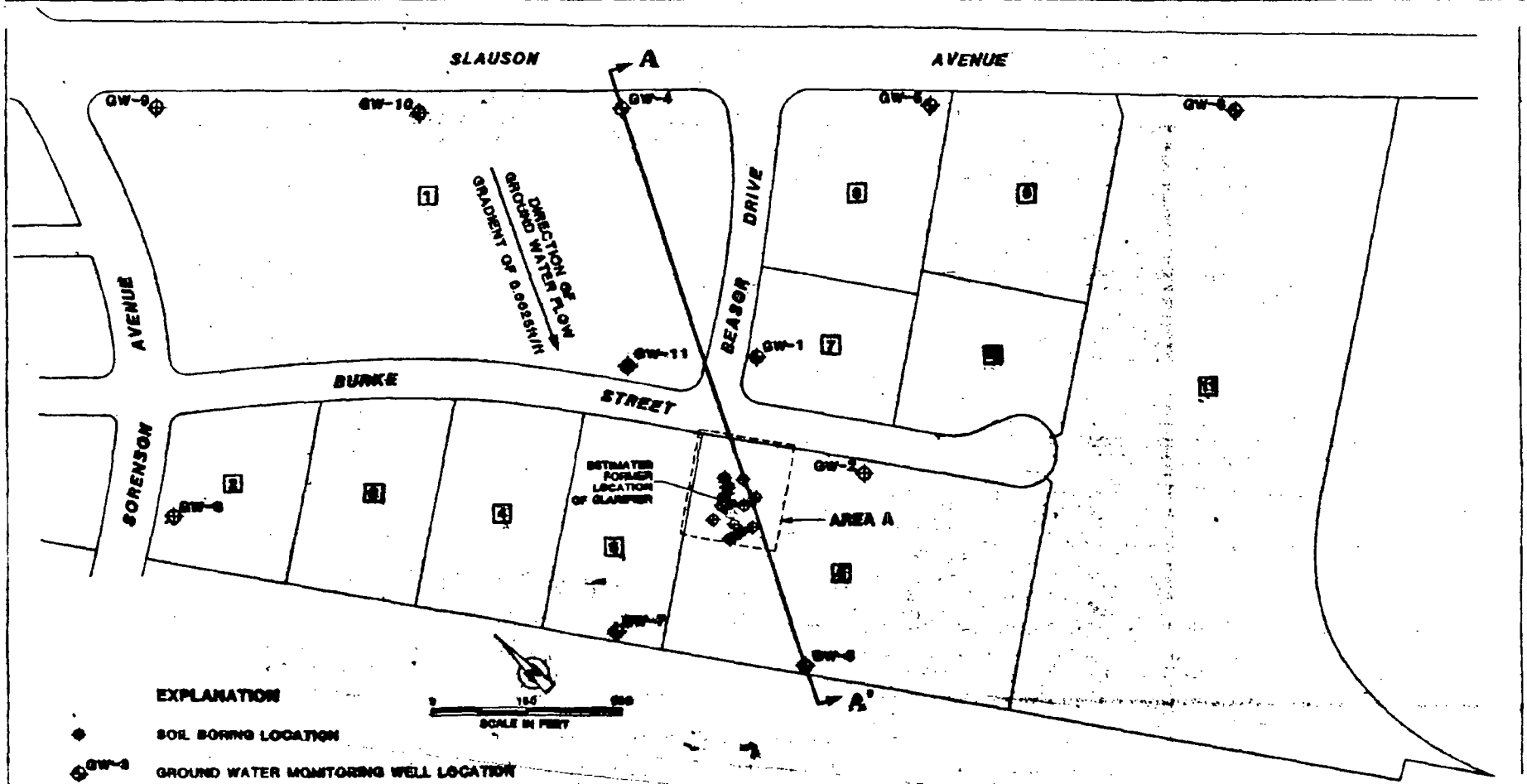

SITE PLAN WITH SOIL BORING and WELL LOCATIONS

FORMER CHRYSLER NEW CAR PREPARATION PLANT
12140 Slauson Avenue
Santa Fe Springs, California

Scale: 1" = 150'
Date: 12/28/90
Prepared By: MKT
Checked By: JCY
Approved By: RHW
Project No: 89-41-130-03
Figure No: 1

Converse Environmental West

APPENDIX A

METHODS OF INVESTIGATION

Monitoring Well Installation

Borings were completed with a truck-mounted hollow-stem auger drill rig utilizing 8-inch augers for the pilot bore. The boreholes were continuously cored to permit close, visual inspection of soil stratigraphy. Borings were extended a minimum of 25 feet below ground water and, subsequent to the completion of drilling and logging, the boreholes were reamed to 10-inches to permit installation of 4-inch diameter well casing.

Subsequent to the completion of drilling and logging, ground water monitoring wells were installed. Well casings consisted of 4-inch diameter PVC with 0.01-inch well screen. In general, the screened section of well casing extends from the bottom of each well to three feet above ground water (approximately 20 feet total length). The filter pack, installed around the screened interval, consists of lC silica sand. 4-inch diameter blank casing extends from approximately five feet above the water table to within one foot of grade. The well was sealed with bentonite grout and a protective well cover was set in cement to prevent unauthorized access to the well head.

Well Development

Well development consisted of surging and bailing with a 5-foot PVC bailer to remove accumulated sediment from the wells and to stabilize the filter pack. Subsequent to surging the well, a mechanical air lift pump was utilized to complete the development process. In general, five casing volumes of water were removed from each well and stored on-site in 55 gallon DOT approved drums awaiting laboratory analyzation and appropriate disposal. Well development equipment was cleaned with an Alconox wash and rinsed with water to minimize the possibility of cross-contamination between wells.

Purging and Sampling

Prior to purging, the initial depth to ground water was measured. Purging was conducted with a manually operated mechanical lift pump. To insure a representative ground water sample was obtained, key parameters such as turbidity, pH, temperature and electrical conductivity were monitored during the purging process.

Ground water samples were obtained upon stabilization of the aforementioned ground water parameters or after the removal of at least three casing volumes of water. Samples were collected in sterilized glass vials and capped with a teflon seal in such a manner that no air entrainment occurred. The vials were labeled, placed in plastic bags and refrigerated pending transport to Converse Envirolab, a State certified laboratory. All purging and sampling equipment was thoroughly cleaned with an Alconox wash, triple rinsed with tap water rinsed final with deionized water to minimize the possibility of cross-contamination between wells.

Sampling and transporting procedures, as well as chain of custody documents, were

completed in accordance with EPA protocol. Ground water generated during purging was contained on-site in 55 gallon DOT approved drums pending laboratory analyses and subsequent disposal.

Field and equipment blanks were collected during the water well sampling and a sample of the drill rig water, used to complete the ground water monitoring wells, was collected and analyzed for aromatic and halogenated compounds via EPA method 8010 and 8020. The results of those analysis are shown in Table 5.

APPENDIX B
LABORATORY ANALYTICAL RESULTS

Converse Envirolab
169 North Halstead Street, Pasadena, California 91107-3127

Telephone (818) 351-2330
FAX (818) 568-9165

Dec. 21, 1990

PROJECT/CLIENT : CATELLUS/CHRYSLER PROJECT NO. :89-41-130-03
PROJECT ENG./MGR.: Hugh Rose ENVIROLAB NO. :90-71-12-175

Subject : Analysis of Samples

On Dec. 18, 1990, 5 sample(s) was/were delivered to the laboratory for analysis. The sample(s) was/were analyzed using the following methods:

8010/8020
418.1

The report was approved on Dec. 21, 1990.
The results which were obtained are listed in the attached table(s).

George Colovos, Ph.D.
Laboratory Director

Converse Envirolab
169 North Halstead Street, Pasadena, California 91107-3127

Telephone (818) 351-2330
FAX (818) 568-9165

Project/Client : CATELLUS/CHRYSLER
Project No. : 89-41-130-03
Project Eng/Mgr: Hugh Rose
Envirolab No. : 90-71-12-175

Report Date : Dec 21, 1990
Date Approved : Dec 21, 1990
Date Received : Dec 18, 1990
Date Sampled : Dec 18, 1990

units: ppb?

Analysis by Method 8010/8020

Sample ID:	175-02	175-03	175-04	175-08	175-09	DL
Client Sample ID	EX.S2	EX.S3	EX.S5	EX.S10	SP.S1	
Batch Number	Q353G081	Q353G081	Q353G081	Q353G061	Q353G061	
Benzyl Chloride	N.D.	N.D.	N.D.	N.D.	N.D.	0.5
Bromobenzene	N.D.	N.D.	N.D.	N.D.	N.D.	0.5
Bromodichloromethane	N.D.	N.D.	N.D.	N.D.	N.D.	0.5
Bromoform	N.D.	N.D.	N.D.	N.D.	N.D.	0.5
Bromomethane	N.D.	N.D.	N.D.	N.D.	N.D.	0.5
Carbon Tetrachloride	N.D.	N.D.	N.D.	N.D.	N.D.	0.5
Chlorobenzene	N.D.	N.D.	N.D.	N.D.	N.D.	0.5
bis(2-Chloroethoxy)Methane	N.D.	N.D.	N.D.	N.D.	N.D.	0.5
Chloroethane	N.D.	N.D.	N.D.	N.D.	N.D.	0.5
2-Chloroethyl Vinyl Ether	N.D.	N.D.	N.D.	N.D.	N.D.	0.5
Chloroform	N.D.	89.0	N.D.	N.D.	N.D.	0.5
1-Chlorohexane	N.D.	N.D.	N.D.	N.D.	N.D.	0.5
Chloromethane	N.D.	N.D.	N.D.	N.D.	N.D.	0.5
Chloromethylmethyl Ether	N.D.	N.D.	N.D.	N.D.	N.D.	0.5
Chlorotoluene	N.D.	N.D.	N.D.	N.D.	N.D.	0.5
Dibromochloromethane	N.D.	N.D.	N.D.	N.D.	N.D.	0.5
Dibromomethane	N.D.	N.D.	N.D.	N.D.	N.D.	0.5
1,2-Dichlorobenzene	N.D.	N.D.	N.D.	N.D.	N.D.	0.5
1,3-Dichlorobenzene	N.D.	N.D.	N.D.	N.D.	N.D.	0.5
1,4-Dichlorobenzene	N.D.	N.D.	N.D.	N.D.	N.D.	0.5
Dichlorodifluoromethane	N.D.	N.D.	N.D.	N.D.	N.D.	0.5
1,1-Dichloroethane	N.D.	19.0	N.D.	N.D.	N.D.	0.5
1,2-Dichloroethane	N.D.	N.D.	N.D.	N.D.	N.D.	0.5
1,1-Dichloroethene	N.D.	N.D.	N.D.	N.D.	N.D.	0.5
1,2-Dichloroethene	460.0	1200.0	N.D.	N.D.	N.D.	0.5
Dichloromethane	N.D.	N.D.	N.D.	N.D.	N.D.	0.5
1,2-Dichloropropane	N.D.	N.D.	N.D.	N.D.	N.D.	0.5
trans-1,3-Dichloropropene	N.D.	N.D.	N.D.	N.D.	N.D.	0.5
1,1,1,2-Tetrachloroethane	N.D.	N.D.	N.D.	N.D.	N.D.	0.5
1,1,2,2-Tetrachloroethane	N.D.	N.D.	N.D.	N.D.	N.D.	0.5
Tetrachloroethene	2100.0	3800.0	4.8	180.0	20.0	0.5
1,1,1-Trichloroethane	N.D.	63.0	N.D.	N.D.	N.D.	0.5
1,1,2-Trichloroethane	N.D.	N.D.	N.D.	N.D.	N.D.	0.5
Trichloroethene	160.0	340.0	0.6	4.4	N.D.	0.5
Trichlorofluoromethane	N.D.	N.D.	N.D.	N.D.	N.D.	0.5
Trichloropropane	N.D.	N.D.	N.D.	N.D.	N.D.	0.5
Vinyl Chloride	N.D.	N.D.	N.D.	N.D.	N.D.	0.5
Benzene	N.D.	N.D.	N.D.	N.D.	N.D.	0.5
Chlorobenzene	N.D.	N.D.	N.D.	N.D.	N.D.	0.5
1,2-Dichlorobenzene	N.D.	N.D.	N.D.	N.D.	N.D.	0.5
1,3-Dichlorobenzene	N.D.	N.D.	N.D.	N.D.	N.D.	0.5
1,4-Dichlorobenzene	N.D.	N.D.	N.D.	N.D.	N.D.	0.5
Ethylbenzene	810.0	2700.0	N.D.	4.0	7.7	0.5

A Wholly Owned Subsidiary of
The Converse Professional Group

Converse Envirolab
169 North Halstead Street, Pasadena, California 91107-3127

Telephone (818) 351-2330
FAX (818) 558-9165

Project/Client : CATELLUS/CHRYSLER
Project No. : 89-41-130-03
Project Eng/Mgr: Hugh Rose
Envirolab No. : 90-71-12-175

Report Date : Dec 21, 1990
Date Approved : Dec 21, 1990
Date Received : Dec 18, 1990
Date Sampled : Dec 18, 1990

Sample ID:	175-02	175-03	175-04	175-08	175-09	DL
Toluene	N.D.	360.0	N.D.	4.2	N.D.	0.5
Xylenes	18000.0	11000.0	1.6	55.0	95.0	0.5

REMARKS:
175-02: DL X 50
175-03: DL X 5

Units: ug/kg
DL : Detection Limits
N.D. : Not Detected

Analysis by Method 418.1

Sample ID:	175-02	175-03	175-04	175-08	175-09	DL
Client Sample ID	EX.S2	EX.S5	EX.S6	EX.S10	SP.S1	
Batch Number	0354R401	0354R401	0354R401	0354R401	0354R401	
Petrol Hydrocarbons	6200.0	360.0	N.D.	440.0	180.0	10.0

REMARKS:
175-02: DLX40
175-03: DLX2
175-08: DLX2

Units: mg/kg
DL : Detection Limits
N.D. : Not Detected

Reviewed by:

Approved by:

George Colovos, Ph.D
Laboratory Director

A Wholly Owned Subsidiary of
The Converse Professional Group

Converse Envirolab
169 North Halstead Street, Pasadena, California 91107-3127
Telephone (818) 568-2807

CHAIN OF CUSTODY RECORD

Envirolab Log Number 90-71-12-5175

Project Name	CATELLUS/CHRYSLER
Project Number	89-41-130-03
Project Location	12140 SLAUSON AVE, SFS.
Phone Number	
Project Manager	BMS / HAR
Sample Collector	JCY

Analyses Required: 418.1 / 8010 / 8020 / HOLD

Turn Around: Normal 10 working days; 1 week RUSH; 24-48 hour RUSH; < 24 hour RUSH

Lab sample number	Date sampled	Time sampled	Matrix	Sample identification	Comp. Instr.	418.1	8010 / 8020			HOLD			Remarks
1	12/15/90	12:00	SOIL	Ex. S3		X	X						Samples PUT on 48
2		12:30		Ex. S4									Rush per John Young
3		1:00		Ex. S5									12/19/90 R. McK
4		1:30		Ex. S6									
5		2:00		Ex. S7						X			
6		2:20		Ex. S8						X			
7		2:45		Ex. S9									
8		3:03		Ex. S10									
9		3:43		Ex. S1									

	Signature	Print Name	Company	Date	Time
Relinquished by	[signature]	JOHN C. YOUNG	CEW	12/18/90	4:30
Received by	Andre Al-Ghani	Andre Al-Ghani	Envirolab	12/18	4:30 PM
Relinquished by					
Received by					
Relinquished by					
Received by					

Converse Envirolab
169 North Halstead Street, Pasadena, California 91107-3127

Telephone (818) 351-2330
FAX (818) 568-9165

Dec. 21, 1990

PROJECT/CLIENT : CATELLUS/CHRYSLER PROJECT NO. :89-41-130-03
PROJECT ENG./MGR.: Hugh Rose ENVIROLAB NO. :90-71-12-179

Subject : Analysis of Samples

On Dec. 19, 1990, 2 sample(s) was/were delivered to the laboratory for analysis. The sample(s) was/were analyzed using the following methods:

8010/8020
418.1

The report was approved on Dec. 21, 1990.
The results which were obtained are listed in the attached table(s).

George Colovos, Ph.D.
Laboratory Director

Converse Envirolab
169 North Halstead Street, Pasadena, California 91107-3127

Telephone (818) 351-2330
FAX (818) 568-9165

Project/Client : CATELLUS/CHRYSLER
Project No. : 89-41-130-03
Project Eng/Mgr: Hugh Rose
Envirolab No. : 90-71-12-179

Report Date : Dec 21, 1990
Date Approved : Dec 21, 1990
Date Received : Dec 19, 1990
Date Sampled : Dec 18, 1990

Analysis by Method 8010/8020

Sample ID:	179-01	179-02	DL
Client Sample ID	EX.S3	EX.S9	
Batch Number	Q3536061	Q3536061	
Benzyl Chloride	N.D.	N.D.	0.5
Bromobenzene	N.D.	N.D.	0.5
Bromodichloromethane	N.D.	N.D.	0.5
Bromoform	N.D.	N.D.	0.5
Bromomethane	N.D.	N.D.	0.5
Carbon Tetrachloride	N.D.	N.D.	0.5
Chlorobenzene	N.D.	N.D.	0.5
bis(2-Chloroethoxy)Methane	N.D.	N.D.	0.5
Chloroethane	N.D.	N.D.	0.5
2-Chloroethyl Vinyl Ether	N.D.	N.D.	0.5
Chloroform	N.D.	N.D.	0.5
1-Chlorohexane	N.D.	N.D.	0.5
Chloromethane	N.D.	N.D.	0.5
Chloromethylmethyl Ether	N.D.	N.D.	0.5
Chlorotoluene	N.D.	N.D.	0.5
Dibromochloromethane	N.D.	N.D.	0.5
Dibromomethane	N.D.	N.D.	0.5
1,2-Dichlorobenzene	N.D.	N.D.	0.5
1,3-Dichlorobenzene	N.D.	N.D.	0.5
1,4-Dichlorobenzene	N.D.	N.D.	0.5
Dichlorodifluoromethane	N.D.	N.D.	0.5
1,1-Dichloroethane	N.D.	N.D.	0.5
1,2-Dichloroethane	N.D.	N.D.	0.5
1,1-Dichloroethene	N.D.	N.D.	0.5
1,2-Dichloroethene	220.0	N.D.	0.5
Dichloromethane	N.D.	N.D.	0.5
1,2-Dichloropropane	N.D.	N.D.	0.5
trans-1,3-Dichloropropene	N.D.	N.D.	0.5
1,1,1,2-Tetrachloroethane	N.D.	N.D.	0.5
1,1,2,2-Tetrachloroethane	N.D.	N.D.	0.5
Tetrachloroethene	410.0	14.0	0.5
1,1,1-Trichloroethane	N.D.	N.D.	0.5
1,1,2-Trichloroethane	N.D.	N.D.	0.5
Trichloroethene	90.0	1.5	0.5
Trichlorofluoromethane	N.D.	N.D.	0.5
Trichloropropane	N.D.	N.D.	0.5
Vinyl Chloride	N.D.	N.D.	0.5
Benzene	N.D.	N.D.	0.5
Chlorobenzene	N.D.	N.D.	0.5
1,2-Dichlorobenzene	N.D.	N.D.	0.5
1,3-Dichlorobenzene	N.D.	N.D.	0.5
1,4-Dichlorobenzene	N.D.	N.D.	0.5
Ethylbenzene	200.0	N.D.	0.5

A Wholly Owned Subsidiary of
The Converse Professional Group

Converse Envirolab
169 North Halstead Street, Pasadena, California 91107-3127

Telephone (818) 351-2330
FAX (818) 568-9165

Project/Client : CATELLUS/CHRYSLER
Project No. : 89-41-130-03
Project Eng/Mgr: Hugh Rose
Envirolab No. : 90-71-12-179

Report Date : Dec 21, 1990
Date Approved : Dec 21, 1990
Date Received : Dec 19, 1990
Date Sampled : Dec 18, 1990

Sample ID:	179-01	179-02	DL
Toluene	N.D.	N.D.	0.5
Xylenes	1600.0	N.D.	0.5

REMARKS:
179-01: DL X 50

Units: ug/kg
DL : Detection Limits
N.D. : Not Detected

Analysis by Method 418.1

Sample ID:	179-01	179-02	DL
Client Sample ID	EX.S3	EX.S6	
Batch Number	03532401	03532401	
Petrol Hydrocarbons	13000.0	N.D.	10.0

REMARKS:
179-01: DL X 50

Units: mg/kg
DL : Detection Limits
N.D. : Not Detected

Reviewed by:

Approved by:

George Colovos, Ph.D
Laboratory Director

A Wholly Owned Subsidiary of
The Converse Professional Group

Converse Envirolab
169 North Halstead Street, Pasadena, California 91107-3127
Telephone (818) 568-2807

CHAIN OF CUSTODY RECORD

Envirolab Log Number 90-71-12-179

Project Name: CATELLUS / CHRYSLER
Project Number: 89-41-130-03
Project Location: 12140 SLAUSON AVE, S.F.S.
Phone Number:
Project Manager: BMS / HAR
Sample Collector: JCY

Analyses Required: 8010/8020 (ppb's); 418.1

Turn Around: Normal - 10 working days; 1 week RUSH; 24-48 hour RUSH; < 24 hour RUSH

Lab sample number	Date sampled	Time sampled	Matrix	Sample Identification	Comp. Instr.	8010/8020 (ppb's)	418.1						Remarks
1	12/18/90	12:[illegible] AM	Soil	EX. S3	Disc.	1	X						LLD LAB # 90-71-12-175-1
2	12/18/90	2:45 PM	↓	EX. S9	Disc.	X	X						" " " -7
													Put on Rush per
													John Young, 12/19/90
													R. McRae

	Signature	Print Name	Company	Date	Time
Relinquished by	[signature]	JOHN C. YOUNG	CELU	12/19/90	10:50
Received by	[signature]	ROHN MCRAE	ENVIROLAB	12/19/90	10:50 AM
Relinquished by					
Received by					
Relinquished by					
Received by					

Converse Envirolab
169 North Halstead Street, Pasadena, California 91107-3127

Telephone (818) 351-2330
FAX (818) 568-9165

Dec. 13, 1990

PROJECT/CLIENT : CATELLUS/CHRYSLER
PROJECT ENG./MGR.: Hugh Rose

PROJECT NO. :89-41-130-03
ENVIROLAB NO. :90-71-12-148

Subject : Analysis of Samples

On Dec. 12, 1990, 2 sample(s) was/were delivered to the laboratory for analysis. The sample(s) was/were analyzed using the following methods:

601/602

The report was approved on Dec. 13, 1990.
The results which were obtained are listed in the attached table(s).

gw ?

George Colovos

George Colovos, Ph.D.
Laboratory Director

Converse Envirolab
169 North Halstead Street, Pasadena, California 91107-3127

Telephone (818) 351-2330
FAX (818) 568-9165

Project/Client : CATELLUS/CHRYSLER
Project No. : 89-41-130-03
Project Eng/Mgr: Hugh Rose
Envirolab No. : 90-71-12-148

Report Date : Dec 13, 1990
Date Approved : Dec 13, 1990
Date Received : Dec 12, 1990
Date Sampled : Dec 12, 1990

Analysis by Method 601/602

Sample ID:	148-01	148-03	DL
Client Sample ID	GW5.S1	TP BLK	
Batch Number	0346G081	0346EC81	
Bromodichloromethane	N.D.	N.D.	0.5
Bromoform	N.D.	N.D.	0.5
Bromomethane	N.D.	N.D.	0.5
Carbon Tetrachloride	N.D.	N.D.	0.5
Chlorobenzene	N.D.	N.D.	0.5
Chloroethane	N.D.	N.D.	0.5
2-Chloroethyl Vinyl Ether	N.D.	N.D.	0.5
Chloroform	N.D.	N.D.	0.5
Chloromethane	N.D.	N.D.	0.5
Dibromochloromethane	N.D.	N.D.	0.5
1,2-Dichlorobenzene	N.D.	N.D.	0.5
1,3-Dichlorobenzene	N.D.	N.D.	0.5
1,4-Dichlorobenzene	N.D.	N.D.	0.5
Dichlorodifluoromethane	N.D.	N.D.	0.5
1,1-Dichloroethane	N.D.	N.D.	0.5
1,2-Dichloroethane	N.D.	N.D.	0.5
1,1-Dichloroethene	110.0	N.D.	0.5
1,2-Dichloroethene	N.D.	N.D.	0.5
Dichloromethane	N.D.	N.D.	0.5
1,2-Dichloropropane	N.D.	N.D.	0.5
cis-1,3-Dichloropropene	N.D.	N.D.	0.5
trans-1,3-Dichloropropene	N.D.	N.D.	0.5
1,1,2,2-Tetrachloroethane	N.D.	N.D.	0.5
Tetrachloroethene	29.0	N.D.	0.5
1,1,2-Trichloroethene	N.D.	N.D.	0.5
1,1,1-Trichloroethane	N.D.	N.D.	0.5
Trichloroethene	150.0	N.D.	0.5
Trichlorofluoromethane	27.0	N.D.	0.5
Vinyl Chloride	N.D.	N.D.	0.5
Benzene	N.D.	N.D.	0.5
Chlorobenzene	N.D.	N.D.	0.5
1,2-Dichlorobenzene	N.D.	N.D.	0.5
1,3-Dichlorobenzene	N.D.	N.D.	0.5
1,4-Dichlorobenzene	N.D.	N.D.	0.5
Ethylbenzene	N.D.	N.D.	0.5
Toluene	N.D.	N.D.	0.5

Units: ug/l
DL : Detection Limits
N.D. : Not Detected

A Wholly Owned Subsidiary of
The Converse Professional Group

Converse Envirolab
169 North Halstead Street, Pasadena, California 91107-3127

Telephone (818) 351-2330
FAX (818) 582-9165

Project/Client	: CATELLUS/CHRYSLER	Report Date	: Dec 13, 1990
Project No.	: 89-41-130-03	Date Approved	: Dec 13, 1990
Project Eng/Mgr	: Hugh Rose	Date Received	: Dec 12, 1990
Envirolab No.	: 90-71-12-148	Date Sampled	: Dec 12, 1990

Reviewed by:

Approved by:

George Colovos, Ph.D
Laboratory Director

A Wholly Owned Subsidiary of
The Converse Professional Group

Envirolab
169 North Halstead Street, Pasadena, California 91107-3127
Telephone (818) 568-2807

CHAIN OF CUSTODY RECORD

Envirolab Log Number 90-71-12-148

Project Name: Catellus / Chrysler	Project Number: 89-41-130-03
Project Location:	Phone Number:
Project Manager: HAR	Sample Collector: JPO

Analyses Required: 601, 602, HALO

Turn Around: Normal - 10 working days; 1 week RUSH; 24-48 hour RUSH; < 24 hour RUSH: X

Lab sample number	Date sampled	Time sampled	Matrix	Sample Identification	Comp. Instr.	601	602		HALO				Remarks
1	12-12-90	12:30	Ground Water	GW-5-S1		X	X						24 hr RUSH
2	12-12-90			FB-4 (before GW-5)					X				FB = Field blank
3	12-12-90			Trip Blank		X	X						

	Signature	Print Name	Company	Date	Time
Relinquished by	John De George	John De George	CEW	12-12-90	2:10
Received by	Ryan McRae	RYAN MCRAE	ENVIROLAB	12-12-90	2:10
Relinquished by					
Received by					
Relinquished by					
Received by					

Converse Envirolab
169 North Halstead Street, Pasadena, California 91107-3127

Telephone (818) 351-2330
FAX (818) 568-9165

Dec. 12, 1990

PROJECT/CLIENT : CATELLUS/CHRYSLER PROJECT NO. :90-41-130-03
PROJECT ENG./MGR.: Ben Swann ENVIROLAB NO. :90-71-12-136

Subject : Analysis of Samples

On Dec. 11, 1990, 1 sample(s) was/were delivered to the laboratory for analysis. The sample(s) was/were analyzed using the following methods:

601/602

The report was approved on Dec. 12, 1990.
The results which were obtained are listed in the attached table(s).

for G.C.
George Colovos, Ph.D.
Laboratory Director

Converse Envirolab
169 North Halstead Street, Pasadena, California 91107-3127

Telephone (818) 351-2330
FAX (818) 568-9165

Project/Client	: CATELLUS/CHRYSLER	Report Date	: Dec 12, 1990
Project No.	: 90-41-130-03	Date Approved	: Dec 12, 1990
Project Eng/Mgr	: Ben Swann	Date Received	: Dec 11, 1990
Envirolab No.	: 90-71-12-136	Date Sampled	: Dec 11, 1990

Analysis by Method 601/602

Sample ID:	136-01	DL
Client Sample ID	GW4.51	
Batch Number	Q34EG081	
Bromodichloromethane	N.D.	0.5
Bromoform	N.D.	0.5
Bromomethane	N.D.	0.5
Carbon Tetrachloride	N.D.	0.5
Chlorobenzene	N.D.	0.5
Chloroethane	N.D.	0.5
2-Chloroethyl Vinyl Ether	N.D.	0.5
Chloroform	N.D.	0.5
Chloromethane	N.D.	0.5
Dibromochloromethane	N.D.	0.5
1,2-Dichlorobenzene	N.D.	0.5
1,3-Dichlorobenzene	N.D.	0.5
1,4-Dichlorobenzene	N.D.	0.5
Dichlorodifluoromethane	N.D.	0.5
1,1-Dichloroethane	N.D.	0.5
1,2-Dichloroethane	N.D.	0.5
1,1-Dichloroethene	1400.0	0.5
1,2-Dichloroethene	N.D.	0.5
Dichloromethane	N.D.	0.5
1,2-Dichloropropane	N.D.	0.5
cis-1,3-Dichloropropene	N.D.	0.5
trans-1,3-Dichloropropene	N.D.	0.5
1,1,2,2-Tetrachloroethane	N.D.	0.5
Tetrachloroethene	400.0	0.5
1,1,2-Trichloroethane	N.D.	0.5
1,1,1-Trichloroethane	13.0	0.5
Trichloroethene	340.0	0.5
Trichlorofluoromethane	270.0	0.5
Vinyl Chloride	N.D.	0.5
Benzene	10.0	0.5
Chlorobenzene	N.D.	0.5
1,2-Dichlorobenzene	N.D.	0.5
1,3-Dichlorobenzene	N.D.	0.5
1,4-Dichlorobenzene	N.D.	0.5
Ethylbenzene	N.D.	0.5
Toluene	N.D.	0.5

REMARKS:
136-01: DL X 10

Units: ug/l
DL : Detection Limits
N.D. : Not Detected

A Wholly Owned Subsidiary of
The Converse Professional Group

Envirolab
169 North Halstead Street, Pasadena, California 91107-3127
Telephone (818) 568-2007

CHAIN OF CUSTODY RECORD

Envirolab Log Number 90-71-12-136

Project Name: CATELLUS / CHRYSLER
Project Number: 90-41-130-03
Project Location:
Phone Number:
Project Manager: BMS
Sample Collector: JPD

Analyses Required: 601/602

Turn Around: Normal - 10 working days; 1 week RUSH; 24-48 hour RUSH; < 24 hour RUSH (X)

Lab sample number	Date sampled	Time sampled	Matrix	Sample Identification	Comp. Instr.	601/602	Remarks
1	12/11/90	10:[illegible] am	water	GW-4 @ S-1		X	ASAP RUSH

	Signature	Print Name	Company	Date	Time
Relinquished by	[illegible]	John C. Young	CFW	12/11/90	11:[illegible] am
Received by	[illegible]	Robin McCabe	Envirolab	12/11/90	11:[illegible] am
Relinquished by					
Received by					
Relinquished by					
Received by					

Converse Envirolab
169 North Halstead Street, Pasadena, California 91107-3127

Telephone (818) 351-2330
FAX (818) 568-9165

Dec. 12, 1990

PROJECT/CLIENT : CATELLUS/CHRYSLER PROJECT NO. :90-41-130-03
PROJECT ENG./MGR.: Hugh Rose ENVIROLAB NO. :90-71-12-137

Subject : Analysis of Samples

On Dec. 11, 1990, 3 sample(s) was/were delivered to the laboratory for analysis. The sample(s) was/were analyzed using the following methods:

601/602

The report was approved on Dec. 12, 1990.
The results which were obtained are listed in the attached table(s).

for G.C.
George Colovos, Ph.D.
Laboratory Director

Converse Envirolab
169 North Halstead Street, Pasadena, California 91107-3127

Telephone (818) 351-2330
FAX (818) 568-9165

Dec. 17, 1990

PROJECT/CLIENT : CATELLUS/CHRYSLER PROJECT NO. :89-41-130-03
PROJECT ENG./MGR.: Ben Swann ENVIROLAB NO. :90-71-12-115

Subject : Analysis of Samples

On Dec. 05, 1990, 1 sample(s) was/were delivered to the laboratory for analysis. The sample(s) was/were analyzed using the following methods:

601/602

The report was approved on Dec. 17, 1990.
The results which were obtained are listed in the attached table(s).

George Colovos, Ph.D.
Laboratory Director

Converse Envirolab
169 North Halstead Street, Pasadena, California 91107-3127

Telephone (818) 351-2330
FAX (818) 568-9165

Project/Client : CATELLUS/CHRYSLER
Project No. : 90-41-130-03
Project Eng/Mgr: Hugh Rose
Envirolab No. : 90-71-12-137

Report Date : Dec 12, 1990
Date Approved : Dec 12, 1990
Date Received : Dec 11, 1990
Date Sampled : Dec 11, 1990

Analysis by Method 601/602

Sample ID:	137-01	137-02	137-04	DL
Client Sample ID	GW6,S1	GW7,S1	FB-2	
Batch Number	Q3463081	Q3463081	Q3463081	
Bromodichloromethane	N.D.	N.D.	N.D.	0.5
Bromoform	N.D.	N.D.	N.D.	0.5
Bromomethane	N.D.	N.D.	N.D.	0.5
Carbon Tetrachloride	N.D.	N.D.	N.D.	0.5
Chlorobenzene	N.D.	N.D.	N.D.	0.5
Chloroethane	N.D.	N.D.	N.D.	0.5
2-Chloroethyl Vinyl Ether	N.D.	N.D.	N.D.	0.5
Chloroform	1.4	N.D.	N.D.	0.5
Chloromethane	N.D.	N.D.	N.D.	0.5
Dibromochloromethane	N.D.	N.D.	N.D.	0.5
1,2-Dichlorobenzene	N.D.	N.D.	N.D.	0.5
1,3-Dichlorobenzene	N.D.	N.D.	N.D.	0.5
1,4-Dichlorobenzene	N.D.	N.D.	N.D.	0.5
Dichlorodifluoromethane	N.D.	N.D.	N.D.	0.5
1,1-Dichloroethane	N.D.	N.D.	N.D.	0.5
1,2-Dichloroethane	N.D.	N.D.	N.D.	0.5
1,1-Dichloroethene	4.2	130.0	N.D.	0.5
1,2-Dichloroethene	N.D.	N.D.	N.D.	0.5
Dichloromethane	N.D.	N.D.	N.D.	0.5
1,2-Dichloropropane	N.D.	N.D.	N.D.	0.5
cis-1,3-Dichloropropene	N.D.	N.D.	N.D.	0.5
trans-1,3-Dichloropropene	N.D.	N.D.	N.D.	0.5
1,1,2,2-Tetrachloroethane	N.D.	N.D.	N.D.	0.5
Tetrachloroethene	2.1	160.0	N.D.	0.5
1,1,2-Trichloroethane	N.D.	N.D.	N.D.	0.5
1,1,1-Trichloroethane	N.D.	N.D.	N.D.	0.5
Trichloroethene	63.2	500.0	N.D.	0.5
Trichlorofluoromethane	N.D.	28.0	N.D.	0.5
Vinyl Chloride	N.D.	N.D.	N.D.	0.5
Benzene	N.D.	N.D.	N.D.	0.5
Chlorobenzene	N.D.	N.D.	N.D.	0.5
1,2-Dichlorobenzene	N.D.	N.D.	N.D.	0.5
1,3-Dichlorobenzene	N.D.	N.D.	N.D.	0.5
1,4-Dichlorobenzene	N.D.	N.D.	N.D.	0.5
Ethylbenzene	N.D.	N.D.	N.D.	0.5
Toluene	N.D.	N.D.	N.D.	0.5

REMARKS:
137-02: DL X 10

Units: ug/l
DL : Detection Limits
N.D. : Not Detected

A Wholly Owned Subsidiary of
The Converse Professional Group

Converse Envirolab
169 North Halstead Street, Pasadena, California 91107-3127

Telephone (818) 351-2330
FAX (818) 563-9165

Project/Client	: CATELLUS/CHRYSLER	Report Date	: Dec 12, 1990
Project No.	: 90-41-130-03	Date Approved	: Dec 12, 1990
Project Eng/Mgr	: Hugh Rose	Date Received	: Dec 11, 1990
Envirolab No.	: 90-71-12-137	Date Sampled	: Dec 11, 1990

Reviewed by:

Approved by:

for G.C.

George Colovos, Ph.D
Laboratory Director

A Wholly Owned Subsidiary of
The Converse Professional Group

Envirolab
169 North Halstead Street, Pasadena, California 91107-3127
Telephone (818) 568-2807

CHAIN OF CUSTODY RECORD

Envirolab Log Number 90-11-12-137

Project Name: Catellus/Chrysler	Project Number: 90-41-130-03
Project Location	Phone Number
Project Manager: HAR	Sample Collector: JPD

Analyses Required: 601, 602

Turn Around: Normal - 10 working days; 1 week RUSH; 24-48 hour RUSH; < 24 hour RUSH: X

Lab sample number	Date sampled	Time sampled	Matrix	Sample Identification	Comp. Instr.	601	602						Remarks
1	12-11-90	11:00	Ground Water	GW-6-S1		X	X						RUSH
2	12-11-90	12:00	Ground Water	GW-7-S1		X	X						24 hr
3	↓		↓	FB-1 (before GW-4)									← hold
4				FB-2 (before GW-6)		X	X						
5				FB-3 (before GW-7)									← hold

	Signature	Print Name	Company	Date	Time
Relinquished by	[signature]	John DeGeorge	CEW	12-11-90	12:30
Received by	[signature]	Ron McRae	Envirolab	12-11-90	12:30
Relinquished by					
Received by					
Relinquished by					
Received by					

Converse Envirolab
169 North Halstead Street, Pasadena, California 91107-3127

Telephone (818) 351-2330
FAX (818) 568-9165

Project/Client	: CATELLUS/CHRYSLER	Report Date	: Dec 17, 1990
Project No.	: 89-41-130-03	Date Approved	: Dec 17, 1990
Project Eng/Mgr	: Ben Swann	Date Received	: Dec 05, 1990
Envirolab No.	: 90-71-12-115	Date Sampled	: Dec 05, 1990

Analysis by Method 601/602

Sample ID:	115-01	DL
Client Sample ID	R16 TK	
Batch Number	03426081	
Bromodichloromethane	4.6	0.5
Bromoform	N.D.	0.5
Bromomethane	N.D.	0.5
Carbon Tetrachloride	N.D.	0.5
Chlorobenzene	N.D.	0.5
Chloroethane	N.D.	0.5
2-Chloroethyl Vinyl Ether	N.D.	0.5
Chloroform	2.9	0.5
Chloromethane	N.D.	0.5
Dibromochloromethane	3.5	0.5
1,2-Dichlorobenzene	N.D.	0.5
1,3-Dichlorobenzene	N.D.	0.5
1,4-Dichlorobenzene	N.D.	0.5
Dichlorodifluoromethane	N.D.	0.5
1,1-Dichloroethane	N.D.	0.5
1,2-Dichloroethane	N.D.	0.5
1,1-Dichloroethene	N.D.	0.5
1,2-Dichloroethene	N.D.	0.5
Dichloromethane	N.D.	0.5
1,2-Dichloropropane	N.D.	0.5
cis-1,3-Dichloropropene	N.D.	0.5
trans-1,3-Dichloropropene	N.D.	0.5
1,1,2,2-Tetrachloroethane	N.D.	0.5
Tetrachloroethene	N.D.	0.5
1,1,2-Trichloroethane	N.D.	0.5
1,1,1-Trichloroethane	N.D.	0.5
Trichloroethene	N.D.	0.5
Trichlorofluoromethane	N.D.	0.5
Vinyl Chloride	N.D.	0.5
Benzene	N.D.	0.5
Chlorobenzene	N.D.	0.5
1,2-Dichlorobenzene	N.D.	0.5
1,3-Dichlorobenzene	N.D.	0.5
1,4-Dichlorobenzene	N.D.	0.5
Ethylbenzene	N.D.	0.5
Toluene	N.D.	0.5

Units: ug/l
DL : Detection Limits
N.D. : Not Detected

A Wholly Owned Subsidiary of
The Converse Professional Group

•169 North Halstead Street, Pasadena, California 91107-3127
Telephone (818) 568-2007

CHAIN OF CUSTODY RECORD

Enviralab Log Number 96-71-12-115

Project Name CATELLUS/Chrysler	Project Number 89-41-130-03		
Project Location 12,140 Slauson Ave, Santa Fe Springs	Phone Number —		
Project Manager Ben Swann	Sample Collector Todd F. Bailey		

Analyses Required: 601, 602

Turn Around: X Normal - 10 working days; 1 week RUSH; 24-48 hour RUSH; < 24 hour RUSH

Lab sample number	Date sampled	Time sampled	Matrix	Sample Identification	Comp. Instr.	601	602						Remarks
	12/05/90	3:00	Water	Rig Tank Water, S1 > 1 Sample	DTSCC	X	X						Confirm with PM. Done 12/6/90 R. McRae
	"	3:00	"	" " " S2	"								

	Signature	Print Name	Company	Date	Time
Relinquished by	Todd F. Bailey	Todd F. Bailey	CEW	12/05/90	6:30
Received by	Andre Al-Ghani	Andre Al-Ghani	Enviralab	12/5	6:30 pm
Relinquished by					
Received by					
Relinquished by					
Received by					

Converse Envirolab
165 North Halstead Street, Pasadena, California 91107-3127

Telephone (818) 351-2330
FAX (818) 568-9165

Dec. 06, 1990

PROJECT/CLIENT : CATELLUS/CHRYSLER PROJECT NO. :89-41-130-03
PROJECT ENG./MGR.: Hugh Rose ENVIROLAB NO. :90-71-12-104

Subject : Analysis of Samples

On Dec. 03, 1990, 4 sample(s) was/were delivered to the laboratory for analysis. The sample(s) was/were analyzed using the following methods:

601/602

The report was approved on Dec. 05, 1990.
The results which were obtained are listed in the attached table(s).

George Colovos, Ph.D.
Laboratory Director

Converse Envirolab
169 North Halstead Street, Pasadena, California 91107-3127

Telephone (818) 351-2330
FAX (818) 568-9165

Project/Client : CATELLUS/CHRYSLER
Project No. : 89-41-130-03
Project Eng/Mgr: Hugh Rose
Envirolab No. : 90-71-12-104

Report Date : Dec 06, 1990
Date Approved : Dec 05, 1990
Date Received : Dec 03, 1990
Date Sampled : Dec 03, 1990

Analysis by Method 601/602

Sample ID:	104-01	104-02	104-03	104-05	DL
Client Sample ID	GW1.S1	GW2.S1	GW3.S1	GW2.FB	
Batch Number	Q3386031	Q3386031	Q3386031	Q3386031	
Bromodichloromethane	N.D.	N.D.	N.D.	N.D.	0.5
Bromoform	N.D.	N.D.	N.D.	N.D.	0.5
Bromomethane	N.D.	N.D.	N.D.	N.D.	0.5
Carbon Tetrachloride	N.D.	N.D.	N.D.	N.D.	0.5
Chlorobenzene	N.D.	N.D.	N.D.	N.D.	0.5
Chloroethane	N.D.	N.D.	N.D.	N.D.	0.5
2-Chloroethyl Vinyl Ether	N.D.	N.D.	N.D.	N.D.	0.5
Chloroform	N.D.	N.D.	N.D.	N.D.	0.5
Chloromethane	N.D.	N.D.	N.D.	N.D.	0.5
Dibromochloromethane	N.D.	N.D.	N.D.	N.D.	0.5
1,2-Dichlorobenzene	N.D.	N.D.	N.D.	N.D.	0.5
1,3-Dichlorobenzene	N.D.	N.D.	N.D.	N.D.	0.5
1,4-Dichlorobenzene	N.D.	N.D.	N.D.	N.D.	0.5
Dichlorodifluoromethane	N.D.	N.D.	N.D.	N.D.	0.5
1,1-Dichloroethane	N.D.	N.D.	N.D.	N.D.	0.5
1,2-Dichloroethane	N.D.	N.D.	N.D.	N.D.	0.5
1,1-Dichloroethene	630.0	180.0	1200.0	N.D.	0.5
1,2-Dichloroethene	N.D.	N.D.	N.D.	N.D.	0.5
Dichloromethane	N.D.	N.D.	N.D.	N.D.	0.5
1,2-Dichloropropane	N.D.	N.D.	N.D.	N.D.	0.5
cis-1,3-Dichloropropene	N.D.	N.D.	N.D.	N.D.	0.5
trans-1,3-Dichloropropene	N.D.	N.D.	N.D.	N.D.	0.5
1,1,2,2-Tetrachloroethane	N.D.	N.D.	N.D.	N.D.	0.5
Tetrachloroethene	250.0	75.0	390.0	N.D.	0.5
1,1,2-Trichloroethane	N.D.	N.D.	N.D.	N.D.	0.5
1,1,1-Trichloroethane	N.D.	N.D.	N.D.	N.D.	0.5
Trichloroethene	430.0	490.0	380.0	N.D.	0.5
Trichlorofluoromethane	190.0	67.0	310.0	N.D.	0.5
Vinyl Chloride	N.D.	N.D.	N.D.	N.D.	0.5
Benzene	N.D.	N.D.	N.D.	N.D.	0.5
Chlorobenzene	N.D.	N.D.	N.D.	N.D.	0.5
1,2-Dichlorobenzene	N.D.	N.D.	N.D.	N.D.	0.5
1,3-Dichlorobenzene	N.D.	N.D.	N.D.	N.D.	0.5
1,4-Dichlorobenzene	N.D.	N.D.	N.D.	N.D.	0.5
Ethylbenzene	N.D.	N.D.	N.D.	N.D.	0.5
Toluene	N.D.	N.D.	N.D.	N.D.	0.5

REMARKS:
104-01: DL X 10
104-02: DL X 10
104-03: DL X 10

Units: ug/l

A Wholly Owned Subsidiary of
The Converse Professional Group

Converse Envirolab
169 North Halstead Street, Pasadena, California 91107-3127
Telephone (818) 568-2807

CHAIN OF CUSTODY RECORD

Envirolab Log Number 90-71-12-104

Project Name: Catellus/Chrysler
Project Number: 89-41-130-03
Project Location:
Phone Number:
Project Manager: HAR
Sample Collector: JPD

Analyses Required: 601/602

Turn Around: Normal - 10 working days; 1 week RUSH; 24-48 hour RUSH; < 24 hour RUSH: X

Lab sample number	Date sampled	Time sampled	Matrix	Sample Identification	Comp. Instr.	601/602							Remarks
1	12-3-90	3:08	Ground Water	GW-1 S1		X							Special 1/2 day RUSH
2	↓	3:25	↓	GW-2 S1		X							
3	↓	3:45	↓	GW-3 S1		X							
4	↓	3:00	Distilled Water	GW-1 FB									← Hold
5	↓	3:19	↓	GW-2 FB		X							
6	↓	3:35	↓	GW-3 FB									← Hold
													FB = field blank

	Signature	Print Name	Company	Date	Time
Relinquished by	John De George	John De George	CEW	12-3-90	4:40P
Received by	Andre Al-Ghani	Andre Al-Ghani	Envirolab	12/1/90	4:40PM
Relinquished by					
Received by					
Relinquished by					
Received by					

Converse Envirolab
169 North Halstead Street, Pasadena, California 91107-3127

Telephone (818) 351-2330
FAX (818) 568-9165

Dec. 04, 1990

PROJECT/CLIENT : CATELLUS/CHRYSLER PROJECT NO. :89-41-130-03
PROJECT ENG./MGR.: Hugh Rose ENVIROLAB NO. :90-71-11-242

Subject : Analysis of Samples

On Nov. 30, 1990, 7 sample(s) was/were delivered to the laboratory for analysis. The sample(s) was/were analyzed using the following methods:

8010

The report was approved on Dec. 04, 1990.
The results which were obtained are listed in the attached table(s).

George Colovos, Ph.D.
Laboratory Director

Converse Envirolab
169 North Halstead Street, Pasadena, California 91107-3127

Telephone (818) 351-2330
FAX (818) 568-9165

Project/Client : CATELLUS/CHRYSLER
Project No. : 89-41-130-03
Project Eng/Mgr: Hugh Rose
Envirolab No. : 90-71-11-242

Report Date : Dec 04, 1990
Date Approved : Dec 04, 1990
Date Received : Nov 30, 1990
Date Sampled : Nov 30, 1990

Analysis by Method 8010

Sample ID:	242-01	242-02	242-03	242-04	242-05	242-06	242-07	DL
Client Sample ID	GW2.S5	GW2.S7	GW2.S9	GW3.S6	GW3.S7	GW3.S9	GW3S10	
Batch Number	Q338G061	Q338G061	Q338G061	Q338G061	Q338G061	Q338G061	Q338G061	
Benzyl Chloride	N.D.	N.D.	N.D.	N.D.	N.D.	N.D.	N.D.	0.5
Bromobenzene	N.D.	N.D.	N.D.	N.D.	N.D.	N.D.	N.D.	0.5
Bromodichloromethane	N.D.	N.D.	N.D.	N.D.	N.D.	N.D.	N.D.	0.5
Bromoform	N.D.	N.D.	N.D.	N.D.	N.D.	N.D.	N.D.	0.5
Bromomethane	N.D.	N.D.	N.D.	N.D.	N.D.	N.D.	N.D.	0.5
Carbon Tetrachloride	N.D.	N.D.	N.D.	N.D.	N.D.	N.D.	N.D.	0.5
Chlorobenzene	N.D.	N.D.	N.D.	N.D.	N.D.	N.D.	N.D.	0.5
bis(2-Chloroethoxy)methane	N.D.	N.D.	N.D.	N.D.	N.D.	N.D.	N.D.	0.5
Chloroethane	N.D.	N.D.	N.D.	N.D.	N.D.	N.D.	N.D.	0.5
2-Chloroethyl Vinyl Ether	N.D.	N.D.	N.D.	N.D.	N.D.	N.D.	N.D.	0.5
Chloroform	N.D.	N.D.	0.7	N.D.	N.D.	N.D.	N.D.	0.5
1-Chlorohexane	N.D.	N.D.	N.D.	N.D.	N.D.	N.D.	N.D.	0.5
Chloromethane	N.D.	N.D.	N.D.	N.D.	N.D.	N.D.	N.D.	0.5
Chloromethylmethyl Ether	N.D.	N.D.	N.D.	N.D.	N.D.	N.D.	N.D.	0.5
Chlorotoluene	N.D.	N.D.	N.D.	N.D.	N.D.	N.D.	N.D.	0.5
Dibromochloromethane	N.D.	N.D.	N.D.	N.D.	N.D.	N.D.	N.D.	0.5
Dibromomethane	N.D.	N.D.	N.D.	N.D.	N.D.	N.D.	N.D.	0.5
1,2-Dichlorobenzene	N.D.	N.D.	N.D.	N.D.	N.D.	N.D.	N.D.	0.5
1,3-Dichlorobenzene	N.D.	N.D.	N.D.	N.D.	N.D.	N.D.	N.D.	0.5
1,4-Dichlorobenzene	N.D.	N.D.	N.D.	N.D.	N.D.	N.D.	N.D.	0.5
Dichlorodifluoromethane	N.D.	N.D.	N.D.	N.D.	N.D.	N.D.	N.D.	0.5
1,1-Dichloroethane	N.D.	N.D.	N.D.	N.D.	N.D.	N.D.	N.D.	0.5
1,2-Dichloroethane	N.D.	N.D.	N.D.	N.D.	N.D.	N.D.	N.D.	0.5
1,1-Dichloroethene	15.0	57.0	41.0	51.0	61.0	51.0	42.0	0.5
cis-1,2-Dichloroethene	N.D.	N.D.	N.D.	N.D.	N.D.	N.D.	N.D.	0.5
trans-1,2-Dichloroethene	N.D.	N.D.	N.D.	N.D.	N.D.	N.D.	N.D.	0.5
Dichloromethane	N.D.	N.D.	N.D.	N.D.	N.D.	N.D.	N.D.	0.5
1,2-Dichloropropane	N.D.	N.D.	N.D.	N.D.	N.D.	N.D.	N.D.	0.5
trans-1,3-Dichloropropene	N.D.	N.D.	N.D.	N.D.	N.D.	N.D.	N.D.	0.5
1,1,1,2-Tetrachloroethane	N.D.	N.D.	N.D.	N.D.	N.D.	N.D.	N.D.	0.5
1,1,2,2-Tetrachloroethane	N.D.	N.D.	N.D.	N.D.	N.D.	N.D.	N.D.	0.5
Tetrachloroethene	N.D.	18.0	1.6	N.D.	24.0	6.4	1.3	0.5
1,1,1-Trichloroethane	N.D.	N.D.	N.D.	N.D.	N.D.	N.D.	N.D.	0.5
1,1,2-Trichloroethane	N.D.	N.D.	N.D.	N.D.	N.D.	N.D.	N.D.	0.5
Trichloroethene	N.D.	85.0	16.0	N.D.	56.0	13.0	4.9	0.5
Trichlorofluoromethane	N.D.	12.0	0.6	N.D.	5.9	1.0	N.D.	0.5
Trichloropropane	N.D.	N.D.	N.D.	N.D.	N.D.	N.D.	N.D.	0.5
Vinyl Chloride	N.D.	N.D.	N.D.	N.D.	N.D.	N.D.	N.D.	0.5

Units: ug/kg
DL : Detection Limits
N.D. : Not Detected

A Wholly Owned Subsidiary of
The Converse Professional Group

Converse Envirolab
169 North Halstead Street, Pasadena, California 91107-3127

Telephone (818) 351-2330
FAX (818) 582-9165

Project/Client	: CATELLUS/CHRYSLER	Report Date	: Dec 04, 1990
Project No.	: 89-41-130-03	Date Approved	: Dec 04, 1990
Project Eng/Mgr	: Hugh Rose	Date Received	: Nov 30, 1990
Envirolab No.	: 90-71-11-242	Date Sampled	: Nov 30, 1990

Reviewed by:

Approved by:

George Colovos, Ph.D
Laboratory Director

A Wholly Owned Subsidiary of
The Converse Professional Group

Converse Envirolab
169 North Halstead Street, Pasadena, California 91107-3127
Telephone (818) 568-2807

CHAIN OF CUSTODY RECORD

Envirolab Log Number 90-71-11-242

Project Name: CATELLUS/CHRYSLER
Project Number: 89-41-130-03
Project Location: 12140 SLAUSON AVE, SANTA-FE SPRINGS
Phone Number:
Project Manager: HAR
Sample Collector: JCY

Analyses Required: 8010

Turn Around: Normal - 10 working days; 1 week RUSH; 24-48 hour RUSH (X); < 24 hour RUSH

Lab sample number	Date sampled	Time sampled	Matrix	Sample identification	Comp. Instr.	8010	Remarks
S-1	11/26/90	—	SOIL	GW-2, S6 @ 30'	DISC.	X	OLD LAB # 90-71-11-242
S-2	↓	—	↓	GW-2, S7 @ 35'	↓	↓	TAKEN OFF HOLD
S-3	↓	—	↓	GW-2, S9 @ 45'	↓	↓	by PER John Young
S-4	↓	—	↓	GW-3, S6 @ 30'	↓	↓	11/30/90
S-5	↓	—	↓	GW-3, S7 @ 35'	↓	↓	5:10 p.m.
S-6	↓	—	↓	GW-3, S9 @ 45'	↓	↓	R. McRae
S-7	↓	—	↓	GW-3, S10 @ 50'	↓	↓	

	Signature	Print Name	Company	Date	Time
Relinquished by		VERBAL PER John Young		11/30/90	5:10 p.m.
Received by	Ron McRae	RON MCRAE	ENVIROLAB	11/30/90	5:10 p.m.
Relinquished by					
Received by					
Relinquished by					
Received by					

Converse Envirolab
169 North Halstead Street, Pasadena, California 91107-3127

Telephone (818) 351-2330
FAX (818) 568-9165

Nov. 30, 1990

PROJECT/CLIENT : CATELLUS/CHRYSLER PROJECT NO. :89-41-130-03
PROJECT ENG./MGR.: Hugh Rose ENVIROLAB NO. :90-71-11-228

Subject : Analysis of Samples

On Nov. 29, 1990, 1 sample(s) was/were delivered to the laboratory for analysis. The sample(s) was/were analyzed using the following methods:

601

The report was approved on Nov. 30, 1990.
The results which were obtained are listed in the attached table(s).

George Colovos, Ph.D.
Laboratory Director

Converse Envirolab
169 North Halstead Street, Pasadena, California 91107-3127

Telephone (818) 351-2330
FAX (818) 568-9165

Project/Client : CATELLUS/CHRYSLER
Project No. : 89-41-130-03
Project Eng/Mgr: Hugh Rose
Envirolab No. : 90-71-11-228

Report Date : Nov 30, 1990
Date Approved : Nov 30, 1990
Date Received : Nov 29, 1990
Date Sampled : Nov 29, 1990

Analysis by Method 601

Sample ID:	228-01	DL
Client Sample ID	BLANK	
Batch Number	Q3336031	
Bromodichloromethane	N.D.	0.5
Bromoform	N.D.	0.5
Bromomethane	N.D.	0.5
Carbon Tetrachloride	N.D.	0.5
Chlorobenzene	N.D.	0.5
Chloroethane	N.D.	0.5
2-Chloroethyl Vinyl Ether	N.D.	0.5
Chloroform	N.D.	0.5
Chloromethane	N.D.	0.5
Dibromochloromethane	N.D.	0.5
1,2-Dichlorobenzene	N.D.	0.5
1,3-Dichlorobenzene	N.D.	0.5
1,4-Dichlorobenzene	N.D.	0.5
Dichlorodifluoromethane	N.D.	0.5
1,1-Dichloroethane	N.D.	0.5
1,2-Dichloroethane	N.D.	0.5
1,1-Dichloroethene	N.D.	0.5
1,2-Dichloroethene	N.D.	0.5
Dichloromethane	N.D.	0.5
1,2-Dichloropropane	N.D.	0.5
cis-1,3-Dichloropropene	N.D.	0.5
trans-1,3-Dichloropropene	N.D.	0.5
1,1,2,2-Tetrachloroethane	N.D.	0.5
Tetrachloroethene	N.D.	0.5
1,1,2-Trichloroethane	N.D.	0.5
1,1,1-Trichloroethane	N.D.	0.5
Trichloroethene	N.D.	0.5
Trichlorofluoromethane	N.D.	0.5
Vinyl Chloride	N.D.	0.5

Units: ug/l
DL : Detection Limits
N.D. : Not Detected

Reviewed by:

Approved by:

George Colovos, Ph.D
Laboratory Director

A Wholly Owned Subsidiary of
The Converse Professional Group

Envirolab
169 North Halstead Street, Pasadena, California 91107-3127
Telephone (818) 568-2807

CHAIN OF CUSTODY RECORD

Envirolab Log Number 90-71-11-228

Project Name: Catellus	Project Number: 89-41-130-03
Project Location: Santa Fe Springs Calif.	Phone Number: 818-796-8200
Project Manager: High Rose	Sample Collector: S. Anderson

Analyses Required: 601

Turn Around:
- Normal - 10 working days
- 1 week RUSH
- 24-48 hour RUSH
- ✓ < 24 hour RUSH

Lab sample number	Date sampled	Time sampled	Matrix	Sample Identification	Comp. Instr.	601	Remarks
5-1	11/29	10:40	WATER	Field Blank (Distilled Water)		X	Distilled water passed through Bailer

	Signature	Print Name	Company	Date	Time
Relinquished by	[signature]	Stephen Anderson		11/29/90	10:45
Received by	[signature]	ROBIN MCRAE	ENVIROLAB	11/29/90	10:45
Relinquished by					
Received by					
Relinquished by					
Received by					

Converse Envirolab
169 North Halstead Street, Pasadena, California 91107-3127

Telephone (818) 351-2330
FAX (818) 568-9165

Dec. 14, 1990

PROJECT/CLIENT : CATELLUS/CHRYSLER PROJECT NO. :89-41-130-03
PROJECT ENG./MGR.: Hugh Rose ENVIROLAB NO. :90-71-11-225

Subject : Analysis of Samples

On Nov. 28, 1990, 20 sample(s) was/were delivered to the laboratory for analysis. The sample(s) was/were analyzed using the following methods:

8010/8020

The report was approved on Dec. 13, 1990.
The results which were obtained are listed in the attached table(s).

George Colovos, Ph.D.
Laboratory Director

Converse Envirolab
169 North Halstead Street, Pasadena, California 91107-3127

Telephone (818) 351-2330
FAX (818) 568-9165

Project/Client : CATELLUS/CHRYSLER
Project No. : 89-41-130-03
Project Eng/Mgr: Hugh Rose
Envirolab No. : 90-71-11-225

Report Date : Dec 14, 1990
Date Approved : Dec 12, 1990
Date Received : Nov 28, 1990
Date Sampled : Nov 28, 1990

Analysis by Method 8010/8020

Sample ID:	225-02	225-03	225-04	225-05	225-06	225-07	225-08	225-09	DL
Client Sample ID	BHSFS2	BHSFS3	BHSGS1	BHSGS2	BHSGS3	BHSIS1	BHSIS2	BHSIS3	
Batch Number	Q345G121	Q345G081	Q345G081	Q345G081	Q345G081	Q345G081	Q345G081	Q345G081	
Benzyl Chloride	N.D.	N.D.	N.D.	N.D.	N.D.	N.D.	N.D.	N.D.	0.5
Bromobenzene	N.D.	N.D.	N.D.	N.D.	N.D.	N.D.	N.D.	N.D.	0.5
Bromodichloromethane	N.D.	N.D.	N.D.	N.D.	N.D.	N.D.	N.D.	N.D.	0.5
Bromoform	N.D.	N.D.	N.D.	N.D.	N.D.	N.D.	N.D.	N.D.	0.5
Bromomethane	N.D.	N.D.	N.D.	N.D.	N.D.	N.D.	N.D.	N.D.	0.5
Carbon Tetrachloride	N.D.	N.D.	N.D.	N.D.	N.D.	N.D.	N.D.	N.D.	0.5
Chlorobenzene	N.D.	N.D.	N.D.	N.D.	N.D.	N.D.	N.D.	N.D.	0.5
bis(2-Chloroethoxy)Methane	N.D.	N.D.	N.D.	N.D.	N.D.	N.D.	N.D.	N.D.	0.5
Chloroethane	N.D.	N.D.	N.D.	N.D.	N.D.	N.D.	N.D.	N.D.	0.5
2-Chloroethyl Vinyl Ether	N.D.	N.D.	N.D.	N.D.	N.D.	N.D.	N.D.	N.D.	0.5
Chloroform	N.D.	N.D.	N.D.	N.D.	N.D.	N.D.	N.D.	N.D.	0.5
1-Chlorohexane	N.D.	N.D.	N.D.	N.D.	N.D.	N.D.	N.D.	N.D.	0.5
Chloromethane	N.D.	N.D.	N.D.	N.D.	N.D.	N.D.	N.D.	N.D.	0.5
Chloromethylmethyl Ether	N.D.	N.D.	N.D.	N.D.	N.D.	N.D.	N.D.	N.D.	0.5
Chlorotoluene	N.D.	N.D.	N.D.	N.D.	N.D.	N.D.	N.D.	N.D.	0.5
Dibromochloromethane	N.D.	N.D.	N.D.	N.D.	N.D.	N.D.	N.D.	N.D.	0.5
Dibromomethane	N.D.	N.D.	N.D.	N.D.	N.D.	N.D.	N.D.	N.D.	0.5
1,2-Dichlorobenzene	N.D.	N.D.	N.D.	N.D.	N.D.	N.D.	N.D.	N.D.	0.5
1,3-Dichlorobenzene	N.D.	N.D.	N.D.	N.D.	N.D.	N.D.	N.D.	N.D.	0.5
1,4-Dichlorobenzene	N.D.	N.D.	N.D.	N.D.	N.D.	N.D.	N.D.	N.D.	0.5
Dichlorodifluoromethane	N.D.	N.D.	N.D.	N.D.	N.D.	N.D.	N.D.	N.D.	0.5
1,1-Dichloroethane	N.D.	N.D.	N.D.	N.D.	N.D.	N.D.	N.D.	N.D.	0.5
1,2-Dichloroethane	N.D.	N.D.	N.D.	N.D.	N.D.	N.D.	N.D.	N.D.	0.5
1,1-Dichloroethene	14.0	N.D.	N.D.	6.6	N.D.	N.D.	10.0	N.D.	0.5
1,2-Dichloroethene	100.0	34.0	N.D.	24.0	N.D.	N.D.	N.D.	N.D.	0.5
Dichloromethane	N.D.	N.D.	N.D.	N.D.	N.D.	N.D.	N.D.	N.D.	0.5
1,2-Dichloropropane	N.D.	N.D.	N.D.	N.D.	N.D.	N.D.	N.D.	N.D.	0.5
trans-1,3-Dichloropropene	N.D.	N.D.	N.D.	N.D.	N.D.	N.D.	N.D.	N.D.	0.5
1,1,1,2-Tetrachloroethane	N.D.	N.D.	N.D.	N.D.	N.D.	N.D.	N.D.	N.D.	0.5
1,1,2,2-Tetrachloroethane	N.D.	N.D.	N.D.	N.D.	N.D.	N.D.	N.D.	N.D.	0.5
Tetrachloroethene	6.9	200.0	1.3	9.3	N.D.	12.0	11.0	N.D.	0.5
1,1,1-Trichloroethane	N.D.	N.D.	N.D.	N.D.	N.D.	N.D.	N.D.	N.D.	0.5
1,1,2-Trichloroethane	N.D.	N.D.	N.D.	N.D.	N.D.	N.D.	N.D.	N.D.	0.5
Trichloroethene	3.6	69.0	N.D.	19.0	N.D.	3.8	9.5	N.D.	0.5
Trichlorofluoromethane	N.D.	N.D.	N.D.	N.D.	N.D.	N.D.	N.D.	N.D.	0.5
Trichloropropane	N.D.	N.D.	N.D.	N.D.	N.D.	N.D.	N.D.	N.D.	0.5
Vinyl Chloride	N.D.	N.D.	N.D.	N.D.	N.D.	N.D.	N.D.	N.D.	0.5
Benzene	0.9	3.0	0.8	0.6	N.D.	0.6	0.5	0.6	0.5
Chlorobenzene	N.D.	N.D.	N.D.	N.D.	N.D.	N.D.	N.D.	N.D.	0.5
1,2-Dichlorobenzene	N.D.	N.D.	N.D.	N.D.	N.D.	N.D.	N.D.	N.D.	0.5
1,3-Dichlorobenzene	N.D.	N.D.	N.D.	N.D.	N.D.	N.D.	N.D.	N.D.	0.5
1,4-Dichlorobenzene	N.D.	N.D.	N.D.	N.D.	N.D.	N.D.	N.D.	N.D.	0.5
Ethylbenzene	1.4	51.0	N.D.	N.D.	N.D.	N.D.	N.D.	N.D.	0.5

A Wholly Owned Subsidiary of
The Converse Professional Group

Converse Envirolab
169 North Halstead Street, Pasadena, California 91107-3127

Telephone (818) 351-2330
FAX (818) 568-9165

Project/Client : CATELLUS/CHRYSLER
Project No. : 89-41-130-03
Project Eng/Mgr: Hugh Rose
Envirolab No. : 90-71-11-225

Report Date : Dec 14, 1990
Date Approved : Dec 12, 1990
Date Received : Nov 28, 1990
Date Sampled : Nov 28, 1990

Sample ID:	225-02	225-03	225-04	225-05	225-06	225-07	225-08	225-09	DL
Toluene	0.8	140.0	2.0	0.7	1.3	1.3	0.7	1.1	0.5
Xylenes	14.0	250.0	0.9	N.D.	N.D.	0.5	N.D.	0.5	0.5

A Wholly Owned Subsidiary of
The Converse Professional Group

Converse Envirolab
169 North Halstead Street, Pasadena, California 91107-3127

Telephone (818) 351-2330
FAX (818) 568-9165

Project/Client : CATELLUS/CHRYSLER
Project No. : 89-41-130-03
Project Eng/Mgr: Hugh Rose
Envirolab No. : 90-71-11-225

Report Date : Dec 14, 1990
Date Approved : Dec 12, 1990
Date Received : Nov 28, 1990
Date Sampled : Nov 28, 1990

Analysis by Method 8010/8020

Sample ID:	225-10	225-11	225-12	225-13	225-14	225-15	225-16	225-17	DL
Client Sample ID	BH9JS1	BH9JS2	BH9JS3	BH9KS1	BH9KS2	BH9KS3	BH9LS1	BH9LS2	
Batch Number	Q345G081	Q345G081	Q345G081	Q345G081	Q345G081	Q345G081	Q345G081	Q345G081	
Benzyl Chloride	N.D.	N.D.	N.D.	N.D.	N.D.	N.D.	N.D.	N.D.	0.5
Bromobenzene	N.D.	N.D.	N.D.	N.D.	N.D.	N.D.	N.D.	N.D.	0.5
Bromodichloromethane	N.D.	N.D.	N.D.	N.D.	N.D.	N.D.	N.D.	N.D.	0.5
Bromoform	N.D.	N.D.	N.D.	N.D.	N.D.	N.D.	N.D.	N.D.	0.5
Bromomethane	N.D.	N.D.	N.D.	N.D.	N.D.	N.D.	N.D.	N.D.	0.5
Carbon Tetrachloride	N.D.	N.D.	N.D.	N.D.	N.D.	N.D.	N.D.	N.D.	0.5
Chlorobenzene	N.D.	N.D.	N.D.	N.D.	N.D.	N.D.	N.D.	N.D.	0.5
bis(2-Chloroethoxy)Methane	N.D.	N.D.	N.D.	N.D.	N.D.	N.D.	N.D.	N.D.	0.5
Chloroethane	N.D.	N.D.	N.D.	N.D.	N.D.	N.D.	N.D.	N.D.	0.5
2-Chloroethyl Vinyl Ether	N.D.	N.D.	N.D.	N.D.	N.D.	N.D.	N.D.	N.D.	0.5
Chloroform	N.D.	N.D.	N.D.	N.D.	N.D.	N.D.	N.D.	N.D.	0.5
1-Chlorohexane	N.D.	N.D.	N.D.	N.D.	N.D.	N.D.	N.D.	N.D.	0.5
Chloromethane	N.D.	N.D.	N.D.	N.D.	N.D.	N.D.	N.D.	N.D.	0.5
Chloromethylmethyl Ether	N.D.	N.D.	N.D.	N.D.	N.D.	N.D.	N.D.	N.D.	0.5
Chlorotoluene	N.D.	N.D.	N.D.	N.D.	N.D.	N.D.	N.D.	N.D.	0.5
Dibromochloromethane	N.D.	N.D.	N.D.	N.D.	N.D.	N.D.	N.D.	N.D.	0.5
Dibromomethane	N.D.	N.D.	N.D.	N.D.	N.D.	N.D.	N.D.	N.D.	0.5
1,2-Dichlorobenzene	N.D.	N.D.	N.D.	N.D.	N.D.	N.D.	N.D.	N.D.	0.5
1,3-Dichlorobenzene	N.D.	N.D.	N.D.	N.D.	N.D.	N.D.	N.D.	N.D.	0.5
1,4-Dichlorobenzene	N.D.	N.D.	N.D.	N.D.	N.D.	N.D.	N.D.	N.D.	0.5
Dichlorodifluoromethane	N.D.	N.D.	N.D.	N.D.	N.D.	N.D.	N.D.	N.D.	0.5
1,1-Dichloroethane	N.D.	N.D.	N.D.	N.D.	N.D.	N.D.	N.D.	N.D.	0.5
1,2-Dichloroethane	N.D.	N.D.	N.D.	N.D.	N.D.	N.D.	N.D.	N.D.	0.5
1,1-Dichloroethene	N.D.	N.D.	N.D.	38.0	57.0	53.0	32.0	70.0	0.5
1,2-Dichloroethene	N.D.	N.D.	N.D.	N.D.	N.D.	N.D.	11.0	N.D.	0.5
Dichloromethane	N.D.	N.D.	N.D.	N.D.	N.D.	N.D.	N.D.	N.D.	0.5
1,2-Dichloropropane	N.D.	N.D.	N.D.	N.D.	N.D.	N.D.	N.D.	N.D.	0.5
trans-1,3-Dichloropropene	N.D.	N.D.	N.D.	N.D.	N.D.	N.D.	N.D.	N.D.	0.5
1,1,1,2-Tetrachloroethane	N.D.	N.D.	N.D.	N.D.	N.D.	N.D.	N.D.	N.D.	0.5
1,1,2,2-Tetrachloroethane	N.D.	N.D.	N.D.	N.D.	N.D.	N.D.	N.D.	N.D.	0.5
Tetrachloroethene	13.0	N.D.	N.D.	N.D.	N.D.	N.D.	6.9	N.D.	0.5
1,1,1-Trichloroethane	N.D.	N.D.	N.D.	N.D.	N.D.	N.D.	N.D.	N.D.	0.5
1,1,2-Trichloroethane	N.D.	N.D.	N.D.	N.D.	N.D.	N.D.	N.D.	N.D.	0.5
Trichloroethene	4.5	N.D.	N.D.	N.D.	1.6	N.D.	17.0	N.D.	0.5
Trichlorofluoromethane	N.D.	N.D.	N.D.	N.D.	N.D.	N.D.	N.D.	N.D.	0.5
Trichloropropane	N.D.	N.D.	N.D.	N.D.	N.D.	N.D.	N.D.	N.D.	0.5
Vinyl Chloride	N.D.	N.D.	N.D.	N.D.	N.D.	N.D.	N.D.	N.D.	0.5
Benzene	1.8	0.9	0.5	1.2	2.3	0.7	0.7	0.7	0.5
Chlorobenzene	N.D.	N.D.	N.D.	N.D.	N.D.	N.D.	N.D.	N.D.	0.5
1,2-Dichlorobenzene	N.D.	N.D.	N.D.	N.D.	N.D.	N.D.	N.D.	N.D.	0.5
1,3-Dichlorobenzene	N.D.	N.D.	N.D.	N.D.	N.D.	N.D.	N.D.	N.D.	0.5
1,4-Dichlorobenzene	N.D.	N.D.	N.D.	N.D.	N.D.	N.D.	N.D.	N.D.	0.5
Ethylbenzene	N.D.	N.D.	N.D.	N.D.	0.6	N.D.	N.D.	N.D.	0.5

A Wholly Owned Subsidiary of
The Converse Professional Group

Converse Envirolab
169 North Halstead Street, Pasadena, California 91107-3127

Telephone (818) 351-2330
FAX (818) 568-9165

Project/Client : CATELLUS/CHRYSLER
Project No. : 89-41-130-03
Project Eng/Mgr: Hugh Rose
Envirolab No. : 90-71-11-225

Report Date : Dec 14, 1990
Date Approved : Dec 12, 1990
Date Received : Nov 28, 1990
Date Sampled : Nov 28, 1990

Sample ID:	225-10	225-11	225-12	225-13	225-14	225-15	225-16	225-17	D1
Toluene	2.9	2.7	1.2	2.4	5.2	1.5	1.3	1.4	0.5
Xylenes	1.0	0.9	0.5	0.9	3.3	1.5	0.5	0.6	0.5

A Wholly Owned Subsidiary of
The Converse Professional Group

Converse Envirolab
169 North Halstead Street, Pasadena, California 91107-3127

Telephone (818) 351-2330
FAX (818) 568-9165

Project/Client : CATELLUS/CHRYSLER
Project No. : 89-41-130-03
Project Eng/Mgr: Hugh Rose
Envirolab No. : 90-71-11-225

Report Date : Dec 14, 1990
Date Approved : Dec 12, 1990
Date Received : Nov 28, 1990
Date Sampled : Nov 28, 1990

Analysis by Method 8010/8020

Sample ID:	225-18	225-19	225-20	225-21	DL
Client Sample ID	BH9LS3	BH9HS1	BH9HS2	BH9HS3	
Batch Number	Q3456081	Q3456081	Q3456081	Q3456081	
Benzyl Chloride	N.D.	N.D.	N.D.	N.D.	0.5
Bromobenzene	N.D.	N.D.	N.D.	N.D.	0.5
Bromodichloromethane	N.D.	N.D.	N.D.	N.D.	0.5
Bromoform	N.D.	N.D.	N.D.	N.D.	0.5
Bromomethane	N.D.	N.D.	N.D.	N.D.	0.5
Carbon Tetrachloride	N.D.	N.D.	N.D.	N.D.	0.5
Chlorobenzene	N.D.	N.D.	N.D.	N.D.	0.5
bis(2-Chloroethoxy)Methane	N.D.	N.D.	N.D.	N.D.	0.5
Chloroethane	N.D.	N.D.	N.D.	N.D.	0.5
2-Chloroethyl Vinyl Ether	N.D.	N.D.	N.D.	N.D.	0.5
Chloroform	N.D.	N.D.	N.D.	N.D.	0.5
1-Chlorohexane	N.D.	N.D.	N.D.	N.D.	0.5
Chloromethane	N.D.	N.D.	N.D.	N.D.	0.5
Chloromethylmethyl Ether	N.D.	N.D.	N.D.	N.D.	0.5
Chlorotoluene	N.D.	N.D.	N.D.	N.D.	0.5
Dibromochloromethane	N.D.	N.D.	N.D.	N.D.	0.5
Dibromomethane	N.D.	N.D.	N.D.	N.D.	0.5
1,2-Dichlorobenzene	N.D.	N.D.	N.D.	N.D.	0.5
1,3-Dichlorobenzene	N.D.	N.D.	N.D.	N.D.	0.5
1,4-Dichlorobenzene	N.D.	N.D.	N.D.	N.D.	0.5
Dichlorodifluoromethane	N.D.	N.D.	N.D.	N.D.	0.5
1,1-Dichloroethane	N.D.	N.D.	N.D.	N.D.	0.5
1,2-Dichloroethane	N.D.	N.D.	N.D.	N.D.	0.5
1,1-Dichloroethene	25.0	N.D.	17.0	18.0	0.5
1,2-Dichloroethene	N.D.	N.D.	N.D.	N.D.	0.5
Dichloromethane	N.D.	N.D.	N.D.	N.D.	0.5
1,2-Dichloropropane	N.D.	N.D.	N.D.	N.D.	0.5
trans-1,3-Dichloropropene	N.D.	N.D.	N.D.	N.D.	0.5
1,1,1,2-Tetrachloroethane	N.D.	N.D.	N.D.	N.D.	0.5
1,1,2,2-Tetrachloroethane	N.D.	N.D.	N.D.	N.D.	0.5
Tetrachloroethene	N.D.	6.7	N.D.	N.D.	0.5
1,1,1-Trichloroethane	N.D.	N.D.	N.D.	N.D.	0.5
1,1,2-Trichloroethane	N.D.	N.D.	N.D.	N.D.	0.5
Trichloroethene	N.D.	2.0	N.D.	N.D.	0.5
Trichlorofluoromethane	N.D.	N.D.	N.D.	N.D.	0.5
Trichloropropane	N.D.	N.D.	N.D.	N.D.	0.5
Vinyl Chloride	N.D.	N.D.	N.D.	N.D.	0.5
Benzene	N.D.	N.D.	N.D.	N.D.	0.5
Chlorobenzene	N.D.	N.D.	N.D.	N.D.	0.5
1,2-Dichlorobenzene	N.D.	N.D.	N.D.	N.D.	0.5
1,3-Dichlorobenzene	N.D.	N.D.	N.D.	N.D.	0.5
1,4-Dichlorobenzene	N.D.	N.D.	N.D.	N.D.	0.5
Ethylbenzene	N.D.	N.D.	N.D.	N.D.	0.5

A Wholly Owned Subsidiary of
The Converse Professional Group

Converse Envirolab
169 North Halstead Street, Pasadena, California 91107-3127

Telephone (818) 351-2330
FAX (818) 568-9165

Project/Client	: CATELLUS/CHRYSLER	Report Date	: Dec 14, 1990
Project No.	: 89-41-130-03	Date Approved	: Dec 12, 1990
Project Eng/Mgr	: Hugh Rose	Date Received	: Nov 28, 1990
Envirolab No.	: 90-71-11-225	Date Sampled	: Nov 28, 1990

Sample ID:	225-18	225-19	225-20	225-21	DL
Toluene	2.2	1.3	1.3	1.2	0.5
Xylenes	1.5	2.1	N.D.	N.D.	0.5

Units: ug/kg
DL : Detection Limits
N.D. : Not Detected

Reviewed by:

Approved by:

George Colovos, Ph.D
Laboratory Director

A Wholly Owned Subsidiary of
The Converse Professional Group

Converse Environlab
169 North Halstead Street, Pasadena, California 91107-3127
Telephone (818) 568-2807

CHAIN OF CUSTODY RECORD

Enviroiab Log Number 90-71-11-225

Project Name: CATELLUS/CHRYSLER	Project Number: B941-130-03
Project Location: 12140 SLAUSON AVE, SANTA FE SPRINGS	Phone Number: CEW
Project Manager: AUGH ROSE	Sample Collector: D. STAGE

Analyses Required: 8010 ppb/8020; Hold

Lab sample number	Date sampled	Time sampled	Matrix	Sample Identification	Comp. Instr.	8010 ppb/8020	Hold						Remarks
VW	11/28/90		SOIL	~~BH-9F, S1, 20 Ft~~	DISCRETE	[illegible]							TAKEN OFF HOLD
2				BH-9F, S2, 25 Ft		X							PER John Young
3				BH-9F, S3, 30 Ft		X							12/3/90
4				BH-9G, S1, 20 Ft		X							R. McRAE
5				BH-9G, S2, 25 Ft		X							
6				BH-9G, S3, 30 Ft		X							1 Wk. RUSH
7				BH-9I, S1, 20 Ft		X							
8				BH-9I, S2, 25 Ft		X							
9				BH-9I, S3, 30 Ft		X							
10				BH-9J, S1, 20 Ft		X							
11				BH-9J, S2, 25 Ft		X							
12	11/28/90		SOIL	BH-9J, S3, 30 Ft	DISCRETE	X							

	Signature	Print Name	Company	Date	Time
Relinquished by	Daniel B. Stage	DANIEL B. STAGE	CEW	11/28/90	[illegible]
Received by	Roan McRae	ROAN MCRAE	ENVIROLAB	11/28/90	[illegible]
Relinquished by					
Received by					
Relinquished by					
Received by					

Conv[redacted]e E[redacted]irol[redacted]
169 North Halstead Street, Pasadena, California 91107-3127
Telephone (818) 568-2807

2 of 2

CHAIN OF CUSTODY RECORD

Envirolab Log Number 90-71-11-225

Project Name: CATELLUS/CHRYSLER	Project Number: 89-41-130-03
Project Location: 12140 SLAUSON AVE., SANTA FE SPRINGS	Phone Number: CEW
Project Manager: HUGH ROSE	Sample Collector: D. STAGE

Analyses Required: 8010 ppb/8020; VOLS

Lab sample number	Date sampled	Time sampled	Matrix	Sample Identification	Comp. Instr.	8010 ppb/8020	VOLS						Remarks
13	11/28/90		SOIL	BH-9K, S1, 20 Ft	DISCRETE	X							TAKEN OFF HOLD
14				BH-9K, S2, 25 Ft		X							PER John Young.
15				BH-9K, S3, 30 Ft		X							12/3/90
16				BH-9L, S1, 20 Ft		X							R. MCRAE
17				BH-9L, S2, 25 Ft		X							
18				BH-9L, S3, 30 Ft		X							1 Wk. Rush
~~[illegible]~~				~~[illegible]~~									
~~[illegible]~~				~~[illegible]~~									
~~[illegible]~~				~~[illegible]~~									
19 ~~[illegible]~~				BH-9H, S1, 20 Ft		X							
20 ~~[illegible]~~				BH-9H, S2, 25 Ft		X							
21 ~~[illegible]~~	11/28/90		SOIL	BH-9H, S3, 30 Ft	DISCRETE	X							

	Signature	Print Name	Company	Date	Time
Relinquished by	Daniel B. Stage	DANIEL B. STAGE	CEW	11/28/90	6:[illegible] pm
Received by	Ryan McRae	RYAN MCRAE	ENVIROLAB	11/28/90	6:[illegible] pm
Relinquished by					
Received by					
Relinquished by					
Received by					

Converse Envirolab
169 North Halstead Street, Pasadena, California 91107-3127

Telephone (818) 351-2330
FAX (818) 568-9165

Nov. 30, 1990

PROJECT/CLIENT : CATELLUS/CHRYSLER PROJECT NO. :88-41-130-03
PROJECT ENG./MGR.: Hugh Rose ENVIROLAB NO. :90-71-11-219

Subject : Analysis of Samples

On Nov. 28, 1990, 3 sample(s) was/were delivered to the laboratory for analysis. The sample(s) was/were analyzed using the following methods:

601

The report was approved on Nov. 30, 1990.
The results which were obtained are listed in the attached table(s).

George Colovos, Ph.D.
Laboratory Director

Converse Envirolab
169 North Halstead Street, Pasadena, California 91107-3127

Telephone (818) 351-2330
FAX (818) 568-9165

Project/Client : CATELLUS/CHRYSLER
Project No. : 88-41-130-03
Project Eng/Mgr: Hugh Rose
Envirolab No. : 90-71-11-219

Report Date : Nov 30, 1990
Date Approved : Nov 30, 1990
Date Received : Nov 28, 1990
Date Sampled : Nov 28, 1990

Analysis by Method 601

Sample ID:	219-01	219-02	219-03	DL
Client Sample ID	GW-3	GW-1	GW-2	
Batch Number	Q3306031	Q3336031	Q3336031	
Bromodichloromethane	N.D.	N.D.	N.D.	0.5
Bromoform	N.D.	N.D.	N.D.	0.5
Bromomethane	N.D.	N.D.	N.D.	0.5
Carbon Tetrachloride	N.D.	N.D.	N.D.	0.5
Chlorobenzene	N.D.	N.D.	N.D.	0.5
Chloroethane	N.D.	N.D.	N.D.	0.5
2-Chloroethyl Vinyl Ether	N.D.	N.D.	N.D.	0.5
Chloroform	N.D.	N.D.	N.D.	0.5
Chloromethane	N.D.	N.D.	N.D.	0.5
Dibromochloromethane	N.D.	N.D.	N.D.	0.5
1,2-Dichlorobenzene	N.D.	N.D.	N.D.	0.5
1,3-Dichlorobenzene	N.D.	N.D.	N.D.	0.5
1,4-Dichlorobenzene	N.D.	N.D.	N.D.	0.5
Dichlorodifluoromethane	N.D.	N.D.	N.D.	0.5
1,1-Dichloroethane	N.D.	N.D.	N.D.	0.5
1,2-Dichloroethane	N.D.	N.D.	N.D.	0.5
1,1-Dichloroethene	650.0	490.0	200.0	0.5
1,2-Dichloroethene	N.D.	N.D.	N.D.	0.5
Dichloromethane	N.D.	N.D.	N.D.	0.5
1,2-Dichloropropane	N.D.	N.D.	N.D.	0.5
cis-1,3-Dichloropropene	N.D.	N.D.	N.D.	0.5
trans-1,3-Dichloropropene	N.D.	N.D.	N.D.	0.5
1,1,2,2-Tetrachloroethane	N.D.	N.D.	N.D.	0.5
Tetrachloroethene	520.0	290.0	110.0	0.5
1,1,2-Trichloroethane	N.D.	N.D.	N.D.	0.5
1,1,1-Trichloroethane	14.0	N.D.	N.D.	0.5
Trichloroethene	450.0	370.0	470.0	0.5
Trichlorofluoromethane	290.0	180.0	88.0	0.5
Vinyl Chloride	N.D.	N.D.	N.D.	0.5

Units: µg/l
DL : Detection Limits
N.D. : Not Detected

Reviewed by:

Approved by:

George Colovos, Ph.D
Laboratory Director

A Wholly Owned Subsidiary of
The Converse Professional Group

Converse Envirolab
169 North Halstead Street, Pasadena, California 91107-3127
Telephone (818) 568-2807

CHAIN OF CUSTODY RECORD

Envirolab Log Number 90-7/41-219

Project Name: CATALINA/CHRYSLER
Project Number: 89-41-130-03
Project Location: 12140 SLAUSON AVE., SANTA FE SPRINGS
Phone Number:
Project Manager: Hugh Rose
Sample Collector: JPD/GPP

Analyses Required: 601

Turn Around: Normal - 10 working days; 1 week RUSH; 24-48 hour RUSH; < 24 hour RUSH: X

Lab sample number	Date sampled	Time sampled	Matrix	Sample Identification	Comp. Instr.	601							Remarks
01	11/28/90	8:45	Ground Water	GW-3-S1		X							Special RUSH
02	↓	8:55	↓	GW-1-S1		X							
03	↓	9:10	↓	GW-2-S1		X							

	Signature	Print Name	Company	Date	Time
Relinquished by	[signature]	John DeGeorge	CEW	11-28-90	10:00A
Received by	[signature]	RONN MCRAE	ENVIROLAB	11-28-90	10:[illegible]A
Relinquished by					
Received by					
Relinquished by					
Received by					

Converse Envirolab
169 North Halstead Street, Pasadena, California 91107-3127

Telephone (818) 351-2330
FAX (818) 568-9165

Nov. 28, 1990

PROJECT/CLIENT : CATELLUS/CHRYSLER
PROJECT ENG./MGR.: Hugh Rose

PROJECT NO. :89-41-130-03
ENVIROLAB NO. :90-71-11-210

Subject : Analysis of Samples

On Nov. 26, 1990, 6 sample(s) was/were delivered to the laboratory for analysis. The sample(s) was/were analyzed using the following methods:

8010

The report was approved on Nov. 28, 1990.
The results which were obtained are listed in the attached table(s).

George Colovos, Ph.D.
Laboratory Director

Converse Envirolab
169 North Halstead Street, Pasadena, California 91107-3127

Telephone (818) 351-2330
FAX (818) 568-9165

Project/Client : CATELLUS/CHRYSLER
Project No. : 89-41-130-03
Project Eng/Mgr: Hugh Rose
Envirolab No. : 90-71-11-210

Report Date : Nov 28, 1990
Date Approved : Nov 28, 1990
Date Received : Nov 26, 1990
Date Sampled : Nov 26, 1990

Analysis by Method 8010

Sample ID:	210-04	210-06	210-10	210-12	210-17	210-18	DL
Client Sample ID	BH21S4	BH21S6	BH23S4	BH23S6	BH24S5	BH24S6	
Batch Number	Q331G061	Q331G061	Q331G061	Q331G061	Q331G061	Q331G061	
Benzyl Chloride	N.D.	N.D.	N.D.	N.D.	N.D.	N.D.	0.5
Bromobenzene	N.D.	N.D.	N.D.	N.D.	N.D.	N.D.	0.5
Bromodichloromethane	N.D.	N.D.	N.D.	N.D.	N.D.	N.D.	0.5
Bromoform	N.D.	N.D.	N.D.	N.D.	N.D.	N.D.	0.5
Bromomethane	N.D.	N.D.	N.D.	N.D.	N.D.	N.D.	0.5
Carbon Tetrachloride	N.D.	N.D.	N.D.	N.D.	N.D.	N.D.	0.5
Chlorobenzene	N.D.	N.D.	N.D.	N.D.	N.D.	N.D.	0.5
bis(2-Chloroethoxy)methane	N.D.	N.D.	N.D.	N.D.	N.D.	N.D.	0.5
Chloroethane	N.D.	N.D.	N.D.	N.D.	N.D.	N.D.	0.5
2-Chloroethyl Vinyl Ether	N.D.	N.D.	N.D.	N.D.	N.D.	N.D.	0.5
Chloroform	N.D.	N.D.	N.D.	N.D.	N.D.	N.D.	0.5
1-Chlorohexane	N.D.	N.D.	N.D.	N.D.	N.D.	N.D.	0.5
Chloromethane	N.D.	N.D.	N.D.	N.D.	N.D.	N.D.	0.5
Chloromethylmethyl Ether	N.D.	N.D.	N.D.	N.D.	N.D.	N.D.	0.5
Chlorotoluene	N.D.	N.D.	N.D.	N.D.	N.D.	N.D.	0.5
Dibromochloromethane	N.D.	N.D.	N.D.	N.D.	N.D.	N.D.	0.5
Dibromomethane	N.D.	N.D.	N.D.	N.D.	N.D.	N.D.	0.5
1,2-Dichlorobenzene	N.D.	N.D.	N.D.	N.D.	N.D.	N.D.	0.5
1,3-Dichlorobenzene	N.D.	N.D.	N.D.	N.D.	N.D.	N.D.	0.5
1,4-Dichlorobenzene	N.D.	N.D.	N.D.	N.D.	N.D.	N.D.	0.5
Dichlorodifluoromethane	N.D.	N.D.	N.D.	N.D.	N.D.	N.D.	0.5
1,1-Dichloroethane	N.D.	N.D.	N.D.	N.D.	N.D.	N.D.	0.5
1,2-Dichloroethane	N.D.	N.D.	N.D.	N.D.	N.D.	N.D.	0.5
1,1-Dichloroethene	N.D.	N.D.	N.D.	N.D.	N.D.	N.D.	0.5
cis-1,2-Dichloroethene	N.D.	N.D.	N.D.	N.D.	N.D.	N.D.	0.5
trans-1,2-Dichloroethene	N.D.	N.D.	N.D.	N.D.	N.D.	N.D.	0.5
Dichloromethane	N.D.	N.D.	N.D.	N.D.	N.D.	N.D.	0.5
1,2-Dichloropropane	N.D.	N.D.	N.D.	N.D.	N.D.	N.D.	0.5
trans-1,3-Dichloropropene	N.D.	N.D.	N.D.	N.D.	N.D.	N.D.	0.5
1,1,1,2-Tetrachloroethane	N.D.	N.D.	N.D.	N.D.	N.D.	N.D.	0.5
1,1,2,2-Tetrachloroethane	N.D.	N.D.	N.D.	N.D.	N.D.	N.D.	0.5
Tetrachloroethene	N.D.	N.D.	N.D.	N.D.	N.D.	N.D.	0.5
1,1,1-Trichloroethane	N.D.	N.D.	N.D.	N.D.	N.D.	N.D.	0.5
1,1,2-Trichloroethane	N.D.	N.D.	N.D.	N.D.	N.D.	N.D.	0.5
Trichloroethene	N.D.	N.D.	N.D.	N.D.	N.D.	N.D.	0.5
Trichlorofluoromethane	N.D.	N.D.	N.D.	N.D.	N.D.	N.D.	0.5
Trichloropropane	N.D.	N.D.	N.D.	N.D.	N.D.	N.D.	0.5
Vinyl Chloride	N.D.	N.D.	N.D.	N.D.	N.D.	N.D.	0.5

Units: ug/kg
DL : Detection Limits
N.D. : Not Detected

A Wholly Owned Subsidiary of
The Converse Professional Group

Converse Envirolab
169 North Halstead Street, Pasadena, California 91107-3127

Telephone (818) 351-2330
FAX (818) 568-9165

Project/Client	: CATELLUS/CHRYSLER	Report Date	: Nov 26, 1990
Project No.	: 89-41-130-03	Date Approved	: Nov 26, 1990
Project Eng/Mgr	: Hugh Rose	Date Received	: Nov 26, 1990
Envirolab No.	: 90-71-11-210	Date Sampled	: Nov 26, 1990

Reviewed by:

Approved by:

George Colovos, Ph.D
Laboratory Director

A Wholly Owned Subsidiary of
The Converse Professional Group

Converse Envirolab
169 North Halstead Street, Pasadena, California 91107-3127
Telephone (818) 568-2807

1 of 2

CHAIN OF CUSTODY RECORD

Envirolab Log Number 90-71-11-210

Project Name: Catellus/Chrysler	Project Number: 8941/130 03
Project Location: 12140 Slauson Ave, Santa Fe Springs	Phone Number: CCW
Project Manager: Hugh Rosa	Sample Collector: Wm Krantz

Turn Around: Normal - 10 working days; 1 week RUSH; X 24-48 hour RUSH; < 24 hour RUSH

Lab sample number	Date sampled	Time sampled	Matrix	Sample Identification	Comp. Instr.	3010 (ppb)	hold							Remarks
1	11-26-90	12:36	Soil	BH-21/ S1 - 5ft	discrete		X							
2		12:45		" 2 - 10			X							
3		12:52		" 3 - 15			X							
4		1:00		" 4 - 20		X								
5		1:07		" 5 - 25			X							
6		1:15		" 6 - 30		X								
7		1:36		BH-23/ S1 - 5			X							
8		1:42		" 2 - 10			X							
9		1:50		" 3 - 15			X							
10		1:57		" 4 - 20		X								
11		2:06		" 5 - 25		(X)	X							omit
12		2:16		" 6 - 30		X								

	Signature	Print Name	Company	Date	Time
Relinquished by	[signature]	Wm. Krantz	CCW	11-26-90	4:00
Received by	[signature]	RYAN MCRAE	ENVIROLAB	11-26-90	4:00 pm
Relinquished by					
Received by					
Relinquished by					
Received by					

Envirolab
169 North Halstead Street, Pasadena, California 91107-3127
Telephone (818) 568-2807

CHAIN OF CUSTODY RECORD

Envirolab Log Number 90-71-11-210

Project Name: Catellus/Chrysler	Project Number: 89 41 130 03
Project Location: 12140 Slauson Ave, Santa Fe Springs	Phone Number: CEW
Project Manager: Hugh Rose	Sample Collector: Wm Krantz

Analyses Required: 8010 (PB) hold

Turn Around: Normal - 10 working days; 1 week RUSH; 24-48 hour RUSH (X); < 24 hour RUSH

Lab sample number	Date sampled	Time sampled	Matrix	Sample Identification	Comp. Instr.	8010 (PB)	hold						Remarks
13	11-26-90	11:30	Soil	BH-24 / S1 - 5 ft	discrete		+						
14		11:43		" 2 - 10			+						
15		11:50		" 3 - 15			+						
16		11:56		" 4 - 20			+						
17		12:04		" 5 - 25		X							
18		12:15		" 6 - 30		X							

	Signature	Print Name	Company	Date	Time
Relinquished by	William Krantz	Wm. Krantz	CEW	11-26-90	4:00
Received by	Ron McLae	RON MCLAE	ENVIROLAB	11-26-90	4:00
Relinquished by					
Received by					
Relinquished by					
Received by					

Converse Envirolab
169 North Halstead Street, Pasadena, California 91107-3127

Telephone (818) 351-2330
FAX (818) 568-9165

Nov. 30, 1990

PROJECT/CLIENT : CATELLUS/CHRYSLER PROJECT NO. :89-41-130-03
PROJECT ENG./MGR.: Hugh Rose ENVIROLAB NO. :90-71-11-212

Subject : Analysis of Samples

On Nov. 26, 1990, 6 sample(s) was/were delivered to the laboratory for analysis. The sample(s) was/were analyzed using the following methods:

8010

The report was approved on Nov. 28, 1990.
The results which were obtained are listed in the attached table(s).

George Colovos, Ph.D.
Laboratory Director

Converse Envirolab
169 North Halstead Street, Pasadena, California 91107-3127

Telephone (818) 351-2330
FAX (818) 568-9165

Project/Client : CATELLUS/CHRYSLER
Project No. : 89-41-130-03
Project Eng/Mgr: Hugh Rose
Envirolab No. : 90-71-11-212

Report Date : Nov 30, 1990
Date Approved : Nov 28, 1990
Date Received : Nov 26, 1990
Date Sampled : Nov 26, 1990

Analysis by Method 8010

Sample ID:	212-18	212-19	212-20	212-21	212-22	212-23	DL
Client Sample ID	BH2251	BH2252	BH2253	BH2254	BH2255	BH2256	
Batch Number	Q3316061	Q3316061	Q3316061	Q3316061	Q3316061	Q3316061	
Benzyl Chloride	N.D.	N.D.	N.D.	N.D.	N.D.	N.D.	0.5
Bromobenzene	N.D.	N.D.	N.D.	N.D.	N.D.	N.D.	0.5
Bromodichloromethane	N.D.	N.D.	N.D.	N.D.	N.D.	N.D.	0.5
Bromoform	N.D.	N.D.	N.D.	N.D.	N.D.	N.D.	0.5
Bromomethane	N.D.	N.D.	N.D.	N.D.	N.D.	N.D.	0.5
Carbon Tetrachloride	N.D.	N.D.	N.D.	N.D.	N.D.	N.D.	0.5
Chlorobenzene	N.D.	N.D.	N.D.	N.D.	N.D.	N.D.	0.5
bis(2-Chloroethoxy)methane	N.D.	N.D.	N.D.	N.D.	N.D.	N.D.	0.5
Chloroethane	N.D.	N.D.	N.D.	N.D.	N.D.	N.D.	0.5
2-Chloroethyl Vinyl Ether	N.D.	N.D.	N.D.	N.D.	N.D.	N.D.	0.5
Chloroform	N.D.	N.D.	N.D.	N.D.	N.D.	N.D.	0.5
1-Chlorohexane	N.D.	N.D.	N.D.	N.D.	N.D.	N.D.	0.5
Chloromethane	N.D.	N.D.	N.D.	N.D.	N.D.	N.D.	0.5
Chloromethylmethyl Ether	N.D.	N.D.	N.D.	N.D.	N.D.	N.D.	0.5
Chlorotoluene	N.D.	N.D.	N.D.	N.D.	N.D.	N.D.	0.5
Dibromochloromethane	N.D.	N.D.	N.D.	N.D.	N.D.	N.D.	0.5
Dibromomethane	N.D.	N.D.	N.D.	N.D.	N.D.	N.D.	0.5
1,2-Dichlorobenzene	N.D.	N.D.	N.D.	N.D.	N.D.	N.D.	0.5
1,3-Dichlorobenzene	N.D.	N.D.	N.D.	N.D.	N.D.	N.D.	0.5
1,4-Dichlorobenzene	N.D.	N.D.	N.D.	N.D.	N.D.	N.D.	0.5
Dichlorodifluoromethane	N.D.	N.D.	N.D.	N.D.	N.D.	N.D.	0.5
1,1-Dichloroethane	N.D.	N.D.	N.D.	N.D.	N.D.	N.D.	0.5
1,2-Dichloroethane	N.D.	N.D.	N.D.	N.D.	N.D.	N.D.	0.5
1,1-Dichloroethene	N.D.	N.D.	N.D.	N.D.	N.D.	N.D.	0.5
cis-1,2-Dichloroethene	N.D.	N.D.	N.D.	N.D.	N.D.	N.D.	0.5
trans-1,2-Dichloroethene	N.D.	N.D.	N.D.	N.D.	N.D.	N.D.	0.5
Dichloromethane	N.D.	N.D.	N.D.	N.D.	N.D.	N.D.	0.5
1,2-Dichloropropane	N.D.	N.D.	N.D.	N.D.	N.D.	N.D.	0.5
trans-1,3-Dichloropropene	N.D.	N.D.	N.D.	N.D.	N.D.	N.D.	0.5
1,1,1,2-Tetrachloroethane	N.D.	N.D.	N.D.	N.D.	N.D.	N.D.	0.5
1,1,2,2-Tetrachloroethane	N.D.	N.D.	N.D.	N.D.	N.D.	N.D.	0.5
Tetrachloroethene	N.D.	N.D.	3.4	1.4	4.0	N.D.	0.5
1,1,1-Trichloroethane	N.D.	N.D.	N.D.	N.D.	N.D.	N.D.	0.5
1,1,2-Trichloroethane	N.D.	N.D.	N.D.	N.D.	N.D.	N.D.	0.5
Trichloroethene	N.D.	N.D.	N.D.	2.3	3.2	N.D.	0.5
Trichlorofluoromethane	N.D.	N.D.	N.D.	N.D.	N.D.	N.D.	0.5
Trichloropropane	N.D.	N.D.	N.D.	N.D.	N.D.	N.D.	0.5
Vinyl Chloride	N.D.	N.D.	N.D.	N.D.	N.D.	N.D.	0.5

Units: ug/kg
DL : Detection Limits
N.D. : Not Detected

A Wholly Owned Subsidiary of
The Converse Professional Group

Converse Envirolab
169 North Halstead Street, Pasadena, California 91107-3127

Telephone (818) 351-2330
FAX (818) 558-9165

Project/Client	: CATELLUS/CHRYSLER	Report Date	: Nov 30, 1990
Project No.	: 89-41-130-03	Date Approved	: Nov 28, 1990
Project Eng/Mgr	: Hugh Rose	Date Received	: Nov 26, 1990
Envirolab No.	: 90-71-11-212	Date Sampled	: Nov 26, 1990

Reviewed by:

Approved by:

George Colovos, Ph.D
Laboratory Director

A Wholly Owned Subsidiary of
The Converse Professional Group

Converse Envirolab
189 North Halstead Street, Pasadena, California 91107-3127
Telephone (818) 568-2807

1 of 2

CHAIN OF CUSTODY RECORD

Envirolab Log Number 90-71-11-212

Project Name: CATELLUS/CHRYSLER
Project Number: 99-41-130-03
Project Location: 4170 SLAUSON AVE SANTA FE SPRINGS
Phone Number:
Project Manager: HAR
Sample Collector: JCY

Analyses Required: 8010 (326) HOLD

Turn Around: Normal - 10 working days; 1 week RUSH; 24-48 hour RUSH; < 24 hour RUSH

Lab sample number	Date sampled	Time sampled	Matrix	Sample identification			Comp. Instr.	8010 (326)	HOLD	Remarks
1	11/26/90	8:10	SOIL	GW-2	51	5'		X	X	* HOLD TILL
2		8:15			52	10'		X		FURTHER NOTICE
3		8:25			53	15'		X		
4		8:30			54	20'		X		
5		8:40			55	25'		X		SAMPLES TAKEN
6		8:45			56	30'		X	X	OFF HOLD 11/30/90
7		8:55			57	35'		X	X	JCY
8		9:10		GW-2	59	45'		X		
9		9:00		GW-3	51	5'				
10		9:05			52	10'				
11		9:35			53	15				
12		9:44		GW-3	54	20				

	Signature	Print Name	Company	Date	Time
Relinquished by	[signature]	JOHN C. YOUNG	CEW	11/26/90	4:00
Received by	[signature]	ROAN MCRAE	ENVIROLAB	11/26/90	4:[illegible] PM
Relinquished by					
Received by					
Relinquished by					
Received by					

Converse Envirolab
169 North Halstead Street, Pasadena, California 91107-3127
Telephone (818) 568-2807

2 of 2

CHAIN OF CUSTODY RECORD

Envirolab Log Number 90-71-11-217

Project Name: CATELLUS/CHRYSLER
Project Number: 89-41-130-03
Project Location: 12140 SLAUSON AVE. Santa Fe Springs
Phone Number:
Project Manager: HAR
Sample Collector: JCY

Turn Around: Normal - 10 working days; 1 week RUSH; 24-48 hour RUSH (X); < 24 hour RUSH

Lab sample number	Date sampled	Time sampled	Matrix	Sample identification	Comp. Instr.	9010 (PPb)	HOLD	Remarks
13	11/26/90	8:52	SOIL	GW-3 55 25'			X	
14		9:55		56 30'		X	X	
15		9:00		57 35'		X	X	
16		9:17		59 45'		X	X	
17		9:49		GW-3 510 50'		X	X	
18		12:25		BH-22 51 5'		X		
19		12:32		52 10'		X		
20		12:34		53 15'		X		
21		12:39		54 20'		X		
22		12:45		55 25'		X		
23		12:50		BH-22 56 30'		X		

	Signature	Print Name	Company	Date	Time
Relinquished by	[signature]	JOHN C. YOUNG	CEW	11/26/90	4:00
Received by	[signature]	ROBIN MCRAE	ENVIROLAB	11/26/90	4:15 pm
Relinquished by					
Received by					
Relinquished by					
Received by					

Converse Envirolab
169 North Halstead Street, Pasadena, California 91107-3127

Telephone (818) 351-2330
FAX (818) 568-9165

Nov. 27, 1990

PROJECT/CLIENT : CATELLUS/CHRYSLER PROJECT NO. :89-41-130-03
PROJECT ENG./MGR.: Hugh Rose ENVIROLAB NO. :90-71-11-209

Subject : Analysis of Samples

On Nov. 21, 1990, 10 sample(s) was/were delivered to the laboratory for analysis. The sample(s) was/were analyzed using the following methods:

8010

The report was approved on Nov. 27, 1990.
The results which were obtained are listed in the attached table(s).

George Colovos, Ph.D.
Laboratory Director

Converse Envirolab
169 North Halstead Street, Pasadena, California 91107-3127

Telephone (818) 351-2330
FAX (818) 568-9165

Project/Client : CATELLUS/CHRYSLER
Project No. : 89-41-130-03
Project Eng/Mgr: Hugh Rose
Envirolab No. : 90-71-11-209

Report Date : Nov 27, 1990
Date Approved : Nov 27, 1990
Date Received : Nov 21, 1990
Date Sampled : Nov 21, 1990

Analysis by Method 8010

Sample ID:	209-01	209-02	209-03	209-04	209-05	209-06	209-07	209-08	DL
Client Sample ID	GW1.S1	GW1.S2	GW1.S3	GW1.S4	GW1.S5	GW1.S6	GW1.S7	GW1.S8	
Batch Number	Q3306061	Q3306061	Q3306061	Q3306061	Q3306061	Q3306061	Q3306061	Q3306061	
Benzyl Chloride	N.D.	N.D.	N.D.	N.D.	N.D.	N.D.	N.D.	N.D.	0.5
Bromobenzene	N.D.	N.D.	N.D.	N.D.	N.D.	N.D.	N.D.	N.D.	0.5
Bromodichloromethane	N.D.	N.D.	N.D.	N.D.	N.D.	N.D.	N.D.	N.D.	0.5
Bromoform	N.D.	N.D.	N.D.	N.D.	N.D.	N.D.	N.D.	N.D.	0.5
Bromomethane	N.D.	N.D.	N.D.	N.D.	N.D.	N.D.	N.D.	N.D.	0.5
Carbon Tetrachloride	N.D.	N.D.	N.D.	N.D.	N.D.	N.D.	N.D.	N.D.	0.5
Chlorobenzene	N.D.	N.D.	N.D.	N.D.	N.D.	N.D.	N.D.	N.D.	0.5
bis(2-Chloroethoxy)methane	N.D.	N.D.	N.D.	N.D.	N.D.	N.D.	N.D.	N.D.	0.5
Chloroethane	N.D.	N.D.	N.D.	N.D.	N.D.	N.D.	N.D.	N.D.	0.5
2-Chloroethyl Vinyl Ether	N.D.	N.D.	N.D.	N.D.	N.D.	N.D.	N.D.	N.D.	0.5
Chloroform	N.D.	N.D.	N.D.	N.D.	N.D.	N.D.	N.D.	N.D.	0.5
1-Chlorohexane	N.D.	N.D.	N.D.	N.D.	N.D.	N.D.	N.D.	N.D.	0.5
Chloromethane	N.D.	N.D.	N.D.	N.D.	N.D.	N.D.	N.D.	N.D.	0.5
Chloromethylmethyl Ether	N.D.	N.D.	N.D.	N.D.	N.D.	N.D.	N.D.	N.D.	0.5
Chlorotoluene	N.D.	N.D.	N.D.	N.D.	N.D.	N.D.	N.D.	N.D.	0.5
Dibromochloromethane	N.D.	N.D.	N.D.	N.D.	N.D.	N.D.	N.D.	N.D.	0.5
Dibromomethane	N.D.	N.D.	N.D.	N.D.	N.D.	N.D.	N.D.	N.D.	0.5
1,2-Dichlorobenzene	N.D.	N.D.	N.D.	N.D.	N.D.	N.D.	N.D.	N.D.	0.5
1,3-Dichlorobenzene	N.D.	N.D.	N.D.	N.D.	N.D.	N.D.	N.D.	N.D.	0.5
1,4-Dichlorobenzene	N.D.	N.D.	N.D.	N.D.	N.D.	N.D.	N.D.	N.D.	0.5
Dichlorodifluoromethane	N.D.	N.D.	N.D.	N.D.	N.D.	N.D.	N.D.	N.D.	0.5
1,1-Dichloroethane	N.D.	N.D.	N.D.	N.D.	N.D.	N.D.	N.D.	N.D.	0.5
1,2-Dichloroethane	N.D.	N.D.	N.D.	N.D.	N.D.	N.D.	N.D.	N.D.	0.5
1,1-Dichloroethene	N.D.	N.D.	N.D.	N.D.	N.D.	N.D.	N.D.	1.4	0.5
cis-1,2-Dichloroethene	N.D.	N.D.	N.D.	N.D.	N.D.	N.D.	N.D.	N.D.	0.5
trans-1,2-Dichloroethene	N.D.	N.D.	N.D.	N.D.	N.D.	N.D.	N.D.	N.D.	0.5
Dichloromethane	N.D.	N.D.	N.D.	N.D.	N.D.	N.D.	N.D.	N.D.	0.5
1,2-Dichloropropane	N.D.	N.D.	N.D.	N.D.	N.D.	N.D.	N.D.	N.D.	0.5
trans-1,3-Dichloropropene	N.D.	N.D.	N.D.	N.D.	N.D.	N.D.	N.D.	N.D.	0.5
1,1,1,2-Tetrachloroethane	N.D.	N.D.	N.D.	N.D.	N.D.	N.D.	N.D.	N.D.	0.5
1,1,2,2-Tetrachloroethane	N.D.	N.D.	N.D.	N.D.	N.D.	N.D.	N.D.	N.D.	0.5
Tetrachloroethene	N.D.	N.D.	N.D.	N.D.	N.D.	N.D.	N.D.	6.0	0.5
1,1,1-Trichloroethane	N.D.	N.D.	N.D.	N.D.	N.D.	N.D.	N.D.	N.D.	0.5
1,1,2-Trichloroethane	N.D.	N.D.	N.D.	N.D.	N.D.	N.D.	N.D.	N.D.	0.5
Trichloroethene	N.D.	N.D.	N.D.	N.D.	N.D.	N.D.	N.D.	13.0	0.5
Trichlorofluoromethane	N.D.	N.D.	N.D.	N.D.	N.D.	N.D.	N.D.	N.D.	0.5
Trichloropropane	N.D.	N.D.	N.D.	N.D.	N.D.	N.D.	N.D.	N.D.	0.5
Vinyl Chloride	N.D.	N.D.	N.D.	N.D.	N.D.	N.D.	N.D.	N.D.	0.5

A Wholly Owned Subsidiary of
The Converse Professional Group

Converse Envirolab
169 North Halstead Street, Pasadena, California 91107-3127

Telephone (818) 351-2330
FAX (818) 568-5165

Project/Client : CATELLUS/CHRYSLER
Project No. : 89-41-130-03
Project Eng/Mgr: Hugh Rose
Envirolab No. : 90-71-11-209

Report Date : Nov 27, 1990
Date Approved : Nov 27, 1990
Date Received : Nov 21, 1990
Date Sampled : Nov 21, 1990

Analysis by Method 8010

Sample ID:	209-09	209-10	DL
Client Sample ID	GW1.SS	GW1S10	
Batch Number	Q3306061	Q3306061	
Benzyl Chloride	N.D.	N.D.	0.5
Bromobenzene	N.D.	N.D.	0.5
Bromodichloromethane	N.D.	N.D.	0.5
Bromoform	N.D.	N.D.	0.5
Bromomethane	N.D.	N.D.	0.5
Carbon Tetrachloride	N.D.	N.D.	0.5
Chlorobenzene	N.D.	N.D.	0.5
bis(2-Chloroethoxy)methane	N.D.	N.D.	0.5
Chloroethane	N.D.	N.D.	0.5
2-Chloroethyl Vinyl Ether	N.D.	N.D.	0.5
Chloroform	1.1	N.D.	0.5
1-Chlorohexane	N.D.	N.D.	0.5
Chloromethane	N.D.	N.D.	0.5
Chloromethylmethyl Ether	N.D.	N.D.	0.5
Chlorotoluene	N.D.	N.D.	0.5
Dibromochloromethane	N.D.	N.D.	0.5
Dibromomethane	N.D.	N.D.	0.5
1,2-Dichlorobenzene	N.D.	N.D.	0.5
1,3-Dichlorobenzene	N.D.	N.D.	0.5
1,4-Dichlorobenzene	N.D.	N.D.	0.5
Dichlorodifluoromethane	N.D.	N.D.	0.5
1,1-Dichloroethane	N.D.	N.D.	0.5
1,2-Dichloroethane	N.D.	N.D.	0.5
1,1-Dichloroethene	11.0	25.0	0.5
cis-1,2-Dichloroethene	N.D.	N.D.	0.5
trans-1,2-Dichloroethene	N.D.	N.D.	0.5
Dichloromethane	N.D.	N.D.	0.5
1,2-Dichloropropane	N.D.	N.D.	0.5
trans-1,3-Dichloropropene	N.D.	N.D.	0.5
1,1,1,2-Tetrachloroethane	N.D.	N.D.	0.5
1,1,2,2-Tetrachloroethane	N.D.	N.D.	0.5
Tetrachloroethene	9.4	18.0	0.5
1,1,1-Trichloroethane	1.1	N.D.	0.5
1,1,2-Trichloroethane	N.D.	N.D.	0.5
Trichloroethene	16.0	29.0	0.5
Trichlorofluoromethane	N.D.	N.D.	0.5
Trichloropropane	N.D.	N.D.	0.5
Vinyl Chloride	N.D.	N.D.	0.5

Units: ug/kg
DL : Detection Limits
N.D. : Not Detected

A Wholly Owned Subsidiary of
The Converse Professional Group

Converse Envirolab
169 North Halstead Street, Pasadena, California 91107-3127

Telephone (818) 351-2330
FAX (818) 568-9165

Project/Client : CATELLUS/CHRYSLER
Project No. : 89-41-130-03
Project Eng/Mgr: Hugh Rose
Envirolab No. : 90-71-11-209

Report Date : Nov 27, 1990
Date Approved : Nov 27, 1990
Date Received : Nov 21, 1990
Date Sampled : Nov 21, 1990

Reviewed by:

Approved by:

George Colovos, Ph.D
Laboratory Director

A Wholly Owned Subsidiary of
The Converse Professional Group

Converse Envirolab
189 North Halstead Street, Pasadena, California 91107-3127
Telephone (818) 568-2807

CHAIN OF CUSTODY RECORD

Envirolab Log Number 90-71-11-209.

Project Name: CATELLUS/CHRYSLER
Project Number: 89-41-130-03
Project Location: 12140 SLAUSON AVE. SANTA FE SPRINGS
Phone Number:
Project Manager: HAR
Sample Collector: JCY

Analyses Required: 8010 PPb

Turn Around:
- Normal - 10 working days
- 1 week RUSH
- 24-48 hour RUSH [X]
- < 24 hour RUSH

Lab sample number	Date sampled	Time sampled	Matrix	Sample Identification	Comp. Instr.	8010 PPb	Remarks
1	11/14/90	9:10	SOIL	GW-1 S1 5'		X	
2		9:25		S2 10'			
3		9:31		S3 15'			
4		9:38		S4 20'			
5		9:45		S5 25'			
6		9:50		S6 30'			
7		10:50		S7 35'			
8		11:05		S8 40'			
9		11:20		S9 45'			
10		11:35		GW-1 S10 50'			

	Signature	Print Name	Company	Date	Time
Relinquished by	[signature]	JOHN C. YOUNG	CELJ	11/21/90	5:25
Received by	[signature]	ALAN MCRAE	ENVIROLAB	11/21/90	5:25
Relinquished by					
Received by					
Relinquished by					
Received by					

Converse Envirolab
169 North Halstead Street, Pasadena, California 91107-3127

Telephone (818) 351-2330
FAX (818) 568-9165

Nov. 21, 1990

PROJECT/CLIENT : CATELLUS/CHRYSLER PROJECT NO. :89-41-130-03
PROJECT ENG./MGR.: Hugh Rose ENVIROLAB NO. :90-71-11-195

Subject : Analysis of Samples

On Nov. 19, 1990, 2 sample(s) was/were delivered to the laboratory for analysis. The sample(s) was/were analyzed using the following methods:

8010

The report was approved on Nov. 20, 1990.
The results which were obtained are listed in the attached table(s).

George Colovos, Ph.D.
Laboratory Director

Converse Envirolab
169 North Halstead Street, Pasadena, California 91107-3127

Telephone (818) 351-2230
FAX (818) 568-9165

Project/Client : CATELLUS/CHRYSLER
Project No. : 89-41-130-03
Project Eng/Mgr: Hugh Rose
Envirolab No. : 90-71-11-195

Report Date : Nov 21, 1990
Date Approved : Nov 20, 1990
Date Received : Nov 19, 1990
Date Sampled : Nov 19, 1990

Analysis by Method 8010

Sample ID:	195-01	195-02	DL
Client Sample ID	S-1	S-2	
Batch Number	Q3236081	Q3236081	
Benzyl Chloride	N.D.	N.D.	0.5
Bromobenzene	N.D.	N.D.	0.5
Bromodichloromethane	N.D.	N.D.	0.5
Bromoform	N.D.	N.D.	0.5
Bromomethane	N.D.	N.D.	0.5
Carbon Tetrachloride	N.D.	N.D.	0.5
Chlorobenzene	N.D.	N.D.	0.5
bis(2-Chloroethoxy)methane	N.D.	N.D.	0.5
Chloroethane	N.D.	N.D.	0.5
2-Chloroethyl Vinyl Ether	N.D.	N.D.	0.5
Chloroform	N.D.	N.D.	0.5
1-Chlorohexane	N.D.	N.D.	0.5
Chloromethane	N.D.	N.D.	0.5
Chloromethylmethyl Ether	N.D.	N.D.	0.5
Chlorotoluene	N.D.	N.D.	0.5
Dibromochloromethane	N.D.	N.D.	0.5
Dibromomethane	N.D.	N.D.	0.5
1,2-Dichlorobenzene	N.D.	N.D.	0.5
1,3-Dichlorobenzene	N.D.	N.D.	0.5
1,4-Dichlorobenzene	N.D.	N.D.	0.5
Dichlorodifluoromethane	N.D.	N.D.	0.5
1,1-Dichloroethane	N.D.	N.D.	0.5
1,2-Dichloroethane	N.D.	N.D.	0.5
1,1-Dichloroethene	6.9	N.D.	0.5
cis-1,2-Dichloroethene	1.7	1.7	0.5
trans-1,2-Dichloroethene	N.D.	N.D.	0.5
Dichloromethane	N.D.	N.D.	0.5
1,2-Dichloropropane	N.D.	N.D.	0.5
trans-1,3-Dichloropropene	N.D.	N.D.	0.5
1,1,1,2-Tetrachloroethane	N.D.	N.D.	0.5
1,1,2,2-Tetrachloroethane	N.D.	N.D.	0.5
Tetrachloroethene	14.0	3.2	0.5
1,1,1-Trichloroethane	N.D.	N.D.	0.5
1,1,2-Trichloroethane	N.D.	N.D.	0.5
Trichloroethene	14.0	7.9	0.5
Trichlorofluoromethane	N.D.	N.D.	0.5
Trichloropropane	N.D.	N.D.	0.5
Vinyl Chloride	N.D.	N.D.	0.5

Units: ug/kg
DL : Detection Limits
N.D. : Not Detected

A Wholly Owned Subsidiary of
The Converse Professional Group

Converse Envirolab
169 North Halstead Street, Pasadena, California 91107-3127

Telephone (818) 351-2330
FAX (818) 568-9165

Project/Client	: CATELLUS/CHRYSLER	Report Date	: Nov 21, 1990
Project No.	: 89-41-130-03	Date Approved	: Nov 20, 1990
Project Eng/Mgr	: Hugh Rose	Date Received	: Nov 19, 1990
Envirolab No.	: 90-71-11-195	Date Sampled	: Nov 19, 1990

Reviewed by:

Approved by:

George Colovos, Ph.D
Laboratory Director

A Wholly Owned Subsidiary of
The Converse Professional Group

Converse Envirolab
169 North Halstead Street, Pasadena, California 91107-3127
Telephone (818) 568-2807

CHAIN OF CUSTODY RECORD

Envirolab Log Number 90-71-11-195

Project Name	CATELLUS / CHRYSLER	Project Number	89-41-130-03
Project Location	12140 SLAUSON AVE SANTA FE SPRINGS	Phone Number	
Project Manager	HUGH ROSE	Sample Collector	HUGH ROSE

Analyses Required: 8010

Turn Around: Normal - 10 working days; 1 week RUSH; 24-48 hour RUSH (X); < 24 hour RUSH

Lab sample number	Date sampled	Time sampled	Matrix	Sample Identification	Comp. Instr.	8010	Remarks
1	11/19/90	2:50	SOIL	EX-1, 35' CLARIFIER PIT		X	RUSH ASAP
2	11/19/90	2:50	SOIL	EX-2, 35' CLARIFIER PIT		X	

	Signature	Print Name	Company	Date	Time
Relinquished by	Daniel B. Stage	DANIEL B. STAGE	CEW	11/19/90	4:40
Received by	Roan McRae	ROAN MCRAE	ENVIROLAB	11/19/90	4:40
Relinquished by					
Received by					
Relinquished by					
Received by					

Converse Envirolab
169 North Halstead Street, Pasadena, California 91107-3127

Telephone (818) 351-2330
FAX (818) 568-9165

Dec. 06, 1990

PROJECT/CLIENT : CATELLUS/CHRYSLER PROJECT NO. :89-41-130-03
PROJECT ENG./MGR.: Hugh Rose ENVIROLAB NO. :90-71-11-213

Subject : Analysis of Samples

On Nov. 15, 1990, 1 sample(s) was/were delivered to the laboratory for analysis. The sample(s) was/were analyzed using the following methods:

8240

The report was approved on Dec. 05, 1990.
The results which were obtained are listed in the attached table(s).

George Colovos, Ph.D.
Laboratory Director

Converse Envirolab
169 North Halstead Street, Pasadena, California 91107-3127

Telephone (818) 351-2330
FAX (818) 566-9165

Project/Client	: CATELLUS/CHRYSLER	Report Date	: Dec 06, 1990
Project No.	: 89-41-130-03	Date Approved	: Dec 05, 1990
Project Eng/Mgr	: Hugh Rose	Date Received	: Nov 15, 1990
Envirolab No.	: 90-71-11-213	Date Sampled	: Nov 15, 1990

Reviewed by:

Approved by:

George Colovos, Ph.D
Laboratory Director

A Wholly Owned Subsidiary of
The Converse Professional Group

Envirolab
169 North Halstead Street, Pasadena, California 91107-3127
Telephone (818) 568-2807

CHAIN OF CUSTODY RECORD

Envirolab Log Number 90-71-11-213.

Project Name	CATELLUS / CHRYSLER	Project Number	89-41-130-03
Project Location	Santa Fe Springs	Phone Number	
Project Manager	Hugh Rose	Sample Collector	TFB

Analyses Required: 8240

Turn Around: Normal - 10 working days; 1 week RUSH; X 24-48 hour RUSH; < 24 hour RUSH

Lab sample number	Date sampled	Time sampled	Matrix	Sample Identification	Comp. Instr.	8240							Remarks
1	11/15/90	—	SOIL	BH-9D, S2 @ 20'	DISC.	X							OLD # 90-71-11-164-16
													Taken off HOLD
													PUT ON RUSH per
													DAN STAGE 11/27/90
													R. MCRAE

	Signature	Print Name	Company	Date	Time
Relinquished by		VERBAL per DAN STAGE		11/27/90	9:50
Received by	Roman McRae	ROMAN MCRAE	ENVIROLAB	11/27/90	9:50 AM
Relinquished by					
Received by					
Relinquished by					
Received by					

Converse Envirolab
169 North Halstead Street, Pasadena, California 91107-3127
Telephone (818) 351-2330
FAX (818) 568-9165

Nov. 19, 1990

PROJECT/CLIENT : CATELLUS/Crysler
PROJECT ENG./MGR.: Hugh Rose

PROJECT NO. :89-41-130-03
ENVIROLAB NO. :90-71-11-164

Subject : Analysis of Samples

On Nov. 15, 1990, 4 sample(s) was/were delivered to the laboratory for analysis. The sample(s) was/were analyzed using the following methods:

8010

The report was approved on Nov. 19, 1990.
The results which were obtained are listed in the attached table(s).

George Colovos, Ph.D.
Laboratory Director

Converse Envirolab
169 North Halstead Street, Pasadena, California 91107-3127

Telephone (818) 351-2330
FAX (818) 568-9165

Project/Client : CATELLUS/Crysler
Project No. : 89-41-130-03
Project Eng/Mgr: Hugh Rose
Envirolab No. : 90-71-11-164

Report Date : Nov 19, 1990
Date Approved : Nov 19, 1990
Date Received : Nov 15, 1990
Date Sampled : Nov 15, 1990

Analysis by Method 8010

Sample ID:	164-09	164-14	164-18	164-23	DL
Client Sample ID	BHSSS4	BHSCS4	BHSDS4	B9 S4A	
Batch Number	Q320G061	Q320G061	Q320G061	Q320G061	
Benzyl Chloride	N.D.	N.D.	N.D.	N.D.	0.5
Bromobenzene	N.D.	N.D.	N.D.	N.D.	0.5
Bromodichloromethane	N.D.	N.D.	N.D.	N.D.	0.5
Bromoform	N.D.	N.D.	N.D.	N.D.	0.5
Bromomethane	N.D.	N.D.	N.D.	N.D.	0.5
Carbon Tetrachloride	N.D.	N.D.	N.D.	N.D.	0.5
Chlorobenzene	N.D.	N.D.	N.D.	N.D.	0.5
bis(2-Chloroethoxy)methane	N.D.	N.D.	N.D.	N.D.	0.5
Chloroethane	N.D.	N.D.	N.D.	N.D.	0.5
2-Chloroethyl Vinyl Ether	N.D.	N.D.	N.D.	N.D.	0.5
Chloroform	N.D.	N.D.	1.2	3.3	0.5
1-Chlorohexane	N.D.	N.D.	N.D.	N.D.	0.5
Chloromethane	N.D.	N.D.	N.D.	N.D.	0.5
Chloromethylmethyl Ether	N.D.	N.D.	N.D.	N.D.	0.5
Chlorotoluene	N.D.	N.D.	N.D.	N.D.	0.5
Dibromochloromethane	N.D.	N.D.	N.D.	N.D.	0.5
Dibromomethane	N.D.	N.D.	N.D.	N.D.	0.5
1,2-Dichlorobenzene	N.D.	N.D.	N.D.	N.D.	0.5
1,3-Dichlorobenzene	N.D.	N.D.	N.D.	N.D.	0.5
1,4-Dichlorobenzene	N.D.	N.D.	N.D.	N.D.	0.5
Dichlorodifluoromethane	N.D.	N.D.	N.D.	N.D.	0.5
1,1-Dichloroethane	N.D.	N.D.	0.7	1.2	0.5
1,2-Dichloroethane	N.D.	N.D.	N.D.	1.1	0.5
1,1-Dichloroethene	N.D.	N.D.	N.D.	92.0	0.5
cis-1,2-Dichloroethene	N.D.	N.D.	47.0	33.0	0.5
trans-1,2-Dichloroethene	N.D.	N.D.	N.D.	N.D.	0.5
Dichloromethane	N.D.	N.D.	N.D.	N.D.	0.5
1,2-Dichloropropane	N.D.	N.D.	N.D.	N.D.	0.5
trans-1,3-Dichloropropene	N.D.	N.D.	N.D.	N.D.	0.5
1,1,1,2-Tetrachloroethane	N.D.	N.D.	N.D.	N.D.	0.5
1,1,2,2-Tetrachloroethane	N.D.	N.D.	N.D.	N.D.	0.5
Tetrachloroethene	N.D.	N.D.	140.0	100.0	0.5
1,1,1-Trichloroethane	N.D.	N.D.	1.5	4.6	0.5
1,1,2-Trichloroethane	N.D.	N.D.	N.D.	N.D.	0.5
Trichloroethene	N.D.	N.D.	32.0	160.0	0.5
Trichlorofluoromethane	N.D.	N.D.	N.D.	N.D.	0.5
Trichloropropane	N.D.	N.D.	N.D.	N.D.	0.5
Vinyl Chloride	N.D.	N.D.	N.D.	N.D.	0.5

Units: ug/kg
DL : Detection Limits
N.D. : Not Detected

A Wholly Owned Subsidiary of
The Converse Consultants Group

Converse Envirolab
169 North Halstead Street, Pasadena, California 91107-3127

Telephone (818) 351-2330
FAX (818) 568-9165

Project/Client	: CATELLUS/Crysler	Report Date	: Nov 19, 1990
Project No.	: 89-41-130-03	Date Approved	: Nov 19, 1990
Project Eng/Mgr	: Hugh Rose	Date Received	: Nov 15, 1990
Envirolab No.	: 90-71-11-164	Date Sampled	: Nov 15, 1990

Reviewed by:

Approved by:

George Colovos, Ph.D
Laboratory Director

A Wholly Owned Subsidiary of
The Converse Professional Group

Envirolab
169 North Halstead Street, Pasadena, California 91107-3127
Telephone (818) 568-2807

CHAIN OF CUSTODY RECORD

Envirolab Log Number 90-71-11-1164

Project Name: CATELLUS/CRYSLER
Project Number: 89-41-130-03
Project Location: 12,140 Slauson Ave., Santa Fe Spr
Phone Number:
Project Manager: Hugh Rose/Russel Keane
Sample Collector: T.F. Battey

Analyses Required: 8010, HOLD

Turn Around: Normal 2-10 working days; 1 week RUSH; 24-48 hour RUSH (X); < 24 hour RUSH

Lab sample number	Date sampled	Time sampled	Matrix	Sample Identification	Comp. Instr.	8010			HOLD			Remarks
1	11/15/90	8:45	Soil	BH-9A, S1, 10'	Discr.	X	X		X			
2		8:53		, S2, 20'		X	X		X			
3		9:10		, S3, 25'		X	X		X			
4		9:16		, S4, 30'		X	X		X			
5		9:31		, S5, 35'		X	X		X			
6		11:28		BH-9B, S1, 10'		X	X		X			
7		11:36		, S2, 20'		X	X		X			
8		11:40		, S3, 25'		X	X		X			
9		11:46		, S4, 30'		X	X					
10		12:30		BH-9B, S1A, 7'					X			Hold. Contaminated soil from cuttings? (Jan)
11		10:37		BH-9C, S1, 10'	Discr.	X	X		X			
12		10:44		, S2, 20' (cont.)		X	X		X			

	Signature	Print Name	Company	Date	Time
Relinquished by	Todd F. Batt	Todd F. Battey	CEW	11/15/90	4:50
Received by	Ryan McLae	RYAN MCLAE	ENVIROLAB	11/15/90	4:50
Relinquished by					
Received by					
Relinquished by					
Received by					

Converse Envirolab
160 North Halstead Street, Pasadena, California 91107-3127
Telephone (818) 568-2807

2 of 2

CHAIN OF CUSTODY RECORD

Envirolab Log Number 90-71-11-164

Project Name	CATELLUS/CRYSLER
Project Number	89-41-130-03
Project Location	Santa Fe Springs
Phone Number	
Project Manager	Rose / Keenan
Sample Collector	TFB

Analyses Required: 2010, HOLD

Turn Around: ✓ Normal - 10 working days; 1 week RUSH; 24-48 hour RUSH; < 24 hour RUSH

Lab sample number	Date sampled	Time sampled	Matrix	Sample Identification (cont)	Comp. Instr.	2010				HOLD			Remarks
13	11/15/90	10:50	Soil	BH-9C, S3, 25'	Discn					X			
14		10:57		↓ S4, 30'		X							
15		12:50		BH-9D, S1, 10'						X			
16		12:57		↓ S2, 20'						X			
17		1:05		↓ S3, 25'						X			
18		1:10		↓ S4, 30' MAY GO HIGH PFD		X							
19		1:49		BH-9E, S1, 10'						X			
20		1:59		↓ S2, 20'						X			
21		2:05		↓ S3, 25'						X			
22		2:07		↓ S4, 30'						X			
23		9:30	Water	BH-9A, S4A, 33		X							Hold
24													

	Signature	Print Name	Company	Date	Time
Relinquished by	[signature]	Todd F. Battey	CEW	11/15/90	4:57
Received by	[signature]	ROAN MCRAE	ENVIROLAB	11/15/90	4:57
Relinquished by					
Received by					
Relinquished by					
Received by					

Converse Envirolab
169 North Halstead Street, Pasadena, California 91107-3127

Telephone (818) 351-2330
FAX (818) 568-9165

Dec. 10, 1990

PROJECT/CLIENT : CATELLUS/CHRYSLER PROJECT NO. :89-41-130-03
PROJECT ENG./MGR.: Hugh Rose ENVIROLAB NO. :90-71-12-100

Subject : Analysis of Samples

On Dec. 03, 1990, 6 sample(s) was/were delivered to the laboratory for analysis. The sample(s) was/were analyzed using the following methods:

8010/8020

The report was approved on Dec. 10, 1990.
The results which were obtained are listed in the attached table(s).

George Colovos, Ph.D.
Laboratory Director

Converse Envirolab
169 North Halstead Street, Pasadena, California 91107-3127

Telephone (818) 351-2330
FAX (818) 568-9165

Project/Client : CATELLUS/CHRYSLER
Project No. : 89-41-130-03
Project Eng/Mgr: Hugh Rose
Envirolab No. : 90-71-12-100

Report Date : Dec 11, 1990
Date Approved : Dec 07, 1990
Date Received : Dec 03, 1990
Date Sampled : Nov 15, 1990

Analysis by Method 8010/8020

Sample ID:	100-01	100-02	100-03	100-04	100-05	100-06	DL
Client Sample ID	BH9AS1	BH9AS2	BH9AS4	BH9CS1	BH9CS2	BH9CS3	
Batch Number	Q339G081	Q339G081	Q339G081	Q339G081	Q339G081	Q339G081	
Benzyl Chloride	N.D.	N.D.	N.D.	N.D.	N.D.	N.D.	0.5
Bromobenzene	N.D.	N.D.	N.D.	N.D.	N.D.	N.D.	0.5
Bromodichloromethane	N.D.	N.D.	N.D.	N.D.	N.D.	N.D.	0.5
Bromoform	N.D.	N.D.	N.D.	N.D.	N.D.	N.D.	0.5
Bromomethane	N.D.	N.D.	N.D.	N.D.	N.D.	N.D.	0.5
Carbon Tetrachloride	N.D.	N.D.	N.D.	N.D.	N.D.	N.D.	0.5
Chlorobenzene	N.D.	N.D.	N.D.	N.D.	N.D.	N.D.	0.5
bis(2-Chloroethoxy)Methane	N.D.	N.D.	N.D.	N.D.	N.D.	N.D.	0.5
Chloroethane	N.D.	N.D.	N.D.	N.D.	N.D.	N.D.	0.5
2-Chloroethyl Vinyl Ether	N.D.	N.D.	N.D.	N.D.	N.D.	N.D.	0.5
Chloroform	N.D.	N.D.	N.D.	N.D.	N.D.	N.D.	0.5
1-Chlorohexane	N.D.	N.D.	N.D.	N.D.	N.D.	N.D.	0.5
Chloromethane	N.D.	N.D.	N.D.	N.D.	N.D.	N.D.	0.5
Chloromethylmethyl Ether	N.D.	N.D.	N.D.	N.D.	N.D.	N.D.	0.5
Chlorotoluene	N.D.	N.D.	N.D.	N.D.	N.D.	N.D.	0.5
Dibromochloromethane	N.D.	N.D.	N.D.	N.D.	N.D.	N.D.	0.5
Dibromomethane	N.D.	N.D.	N.D.	N.D.	N.D.	N.D.	0.5
1,2-Dichlorobenzene	N.D.	N.D.	N.D.	N.D.	N.D.	N.D.	0.5
1,3-Dichlorobenzene	N.D.	N.D.	N.D.	N.D.	N.D.	N.D.	0.5
1,4-Dichlorobenzene	N.D.	N.D.	N.D.	N.D.	N.D.	N.D.	0.5
Dichlorodifluoromethane	N.D.	N.D.	N.D.	N.D.	N.D.	N.D.	0.5
1,1-Dichloroethane	N.D.	3.6	N.D.	N.D.	N.D.	N.D.	0.5
1,2-Dichloroethane	N.D.	N.D.	N.D.	N.D.	N.D.	N.D.	0.5
1,1-Dichloroethene	15.0	N.D.	N.D.	N.D.	28.0	N.D.	0.5
1,2-Dichloroethene	N.D.	180.0	N.D.	N.D.	N.D.	N.D.	0.5
Dichloromethane	N.D.	N.D.	N.D.	N.D.	N.D.	N.D.	0.5
1,2-Dichloropropane	N.D.	N.D.	N.D.	N.D.	N.D.	N.D.	0.5
trans-1,3-Dichloropropene	N.D.	N.D.	N.D.	N.D.	N.D.	N.D.	0.5
1,1,1,2-Tetrachloroethane	N.D.	N.D.	N.D.	N.D.	N.D.	N.D.	0.5
1,1,2,2-Tetrachloroethane	N.D.	N.D.	N.D.	N.D.	N.D.	N.D.	0.5
Tetrachloroethene	19.0	N.D.	N.D.	7.4	N.D.	N.D.	0.5
1,1,1-Trichloroethane	N.D.	N.D.	N.D.	N.D.	N.D.	N.D.	0.5
1,1,2-Trichloroethane	N.D.	N.D.	N.D.	N.D.	N.D.	N.D.	0.5
Trichloroethene	N.D.	N.D.	N.D.	N.D.	N.D.	N.D.	0.5
Trichlorofluoromethane	N.D.	N.D.	N.D.	N.D.	N.D.	N.D.	0.5
Trichloropropane	N.D.	N.D.	N.D.	N.D.	N.D.	N.D.	0.5
Vinyl Chloride	N.D.	N.D.	N.D.	N.D.	N.D.	N.D.	0.5
Benzene	1.6	2.5	N.D.	0.9	2.0	1.0	0.5
Chlorobenzene	N.D.	N.D.	N.D.	N.D.	N.D.	N.D.	0.5
1,2-Dichlorobenzene	N.D.	N.D.	N.D.	N.D.	N.D.	N.D.	0.5
1,3-Dichlorobenzene	N.D.	N.D.	N.D.	N.D.	N.D.	N.D.	0.5
1,4-Dichlorobenzene	N.D.	N.D.	N.D.	N.D.	N.D.	N.D.	0.5
Ethylbenzene	N.D.	67.0	N.D.	N.D.	N.D.	N.D.	0.5

A Wholly Owned Subsidiary of
The Converse Professional Group

Converse Envirolab
169 North Halstead Street, Pasadena, California 91107-3127
Telephone (818) 351-2330
FAX (818) 568-9165

Project/Client : CATELLUS/CHRYSLER
Project No. : 89-41-130-03
Project Eng/Mgr: Hugh Rose
Envirolab No. : 90-71-12-100

Report Date : Dec 11, 1990
Date Approved : Dec 07, 1990
Date Received : Dec 03, 1990
Date Sampled : Nov 15, 1990

Sample ID:	100-01	100-02	100-03	100-04	100-05	100-06	DL
Toluene	2.5	5.1	0.7	2.1	3.6	1.4	0.5
Xylenes	0.6	330.0	N.D.	0.8	1.7	0.7	0.5

REMARKS:
100-02: Sample contains hydrocarbons.

Units: ug/kg
DL : Detection Limits
N.D. : Not Detected

Reviewed by:

Approved by:
George Colovos, Ph.D
Laboratory Director

A Wholly Owned Subsidiary of
The Converse Professional Group

Converse Enviroiab
169 North Halstead Street, Pasadena, California 91107-3127
Telephone (818) 568-2807

CHAIN OF CUSTODY RECORD

Enviroiab Log Number 90-71-12-100

Project Name	CATELLUS / CHRYSLER
Project Number	89-41-130-03
Project Location	12140 SLAUSON AVE SANTA FE SPRINGS
Phone Number	
Project Manager	Hugh Rose
Sample Collector	T.F. Battey

Analyses Required: 8010 / 8020 (PPB)

Turn Around: Normal - 10 working days; 1 week RUSH (X); 24-48 hour RUSH; < 24 hour RUSH

Lab sample number	Date sampled	Time sampled	Matrix	Sample identification	Comp. Instr.	8010/8020 (PPB)	Remarks
1	11/15/90		SOIL	BH-9A, S1 @ 10'	DTSC	X	DLD # 90-71-11-164-1
2	↓		↓	BH-9A, S2 @ 20'	↓	↓	" " -2
3				BH-9A, S4 @ 30'			" " -4
4				BH-9C, S1 @ 10'			" " -11
5				BH-9C, S2 @ 20'			" " -12
6				BH-9C, S3 @ 25'			" " -13
							(*) SAMPLES TAKEN OFF HOLD 12/3/90. PER JOHN YOUNG
				(*) CLIENT KNOWS SAMPLES ARE PAST HOLDING TIMES.			R. McRae

	Signature	Print Name	Company	Date	Time
Relinquished by	VERBAL	PER John Young.		12/3/90	3:45
Received by	Ron McRae	RON MCRAE	ENVIROLAB	12/3/90	3:45 pm
Relinquished by					
Received by					
Relinquished by					
Received by					

APPENDIX C
GROUND WATER MONITORING WELL DIAGRAMS

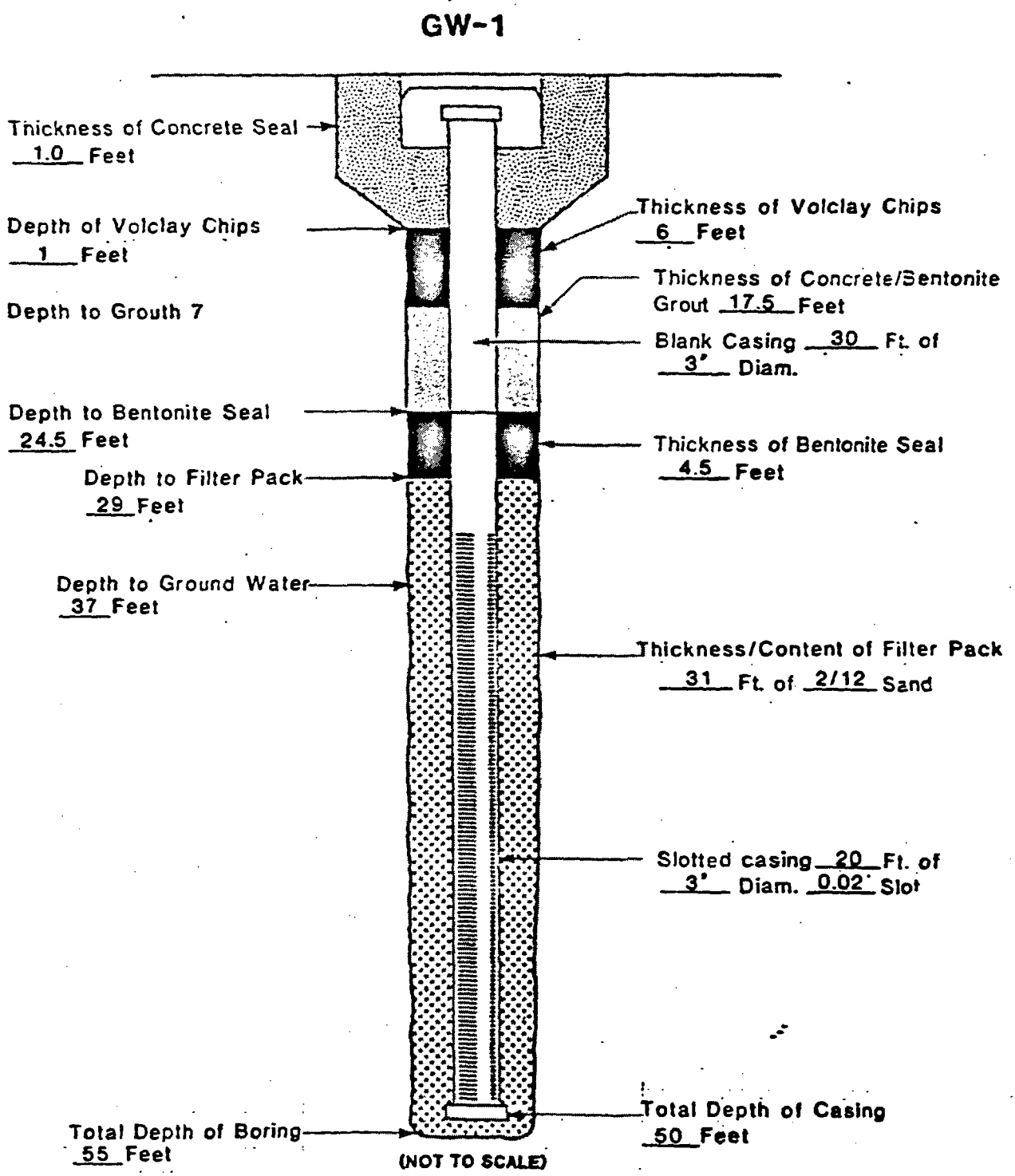

GROUND-WATER MONITORING WELL

12140 Slauson Avenue, Santa Fe Springs, California
for: Catellus Development Corporation

Project No.
89-41-130-03

Figure No.

Converse Environmental West

GW-2

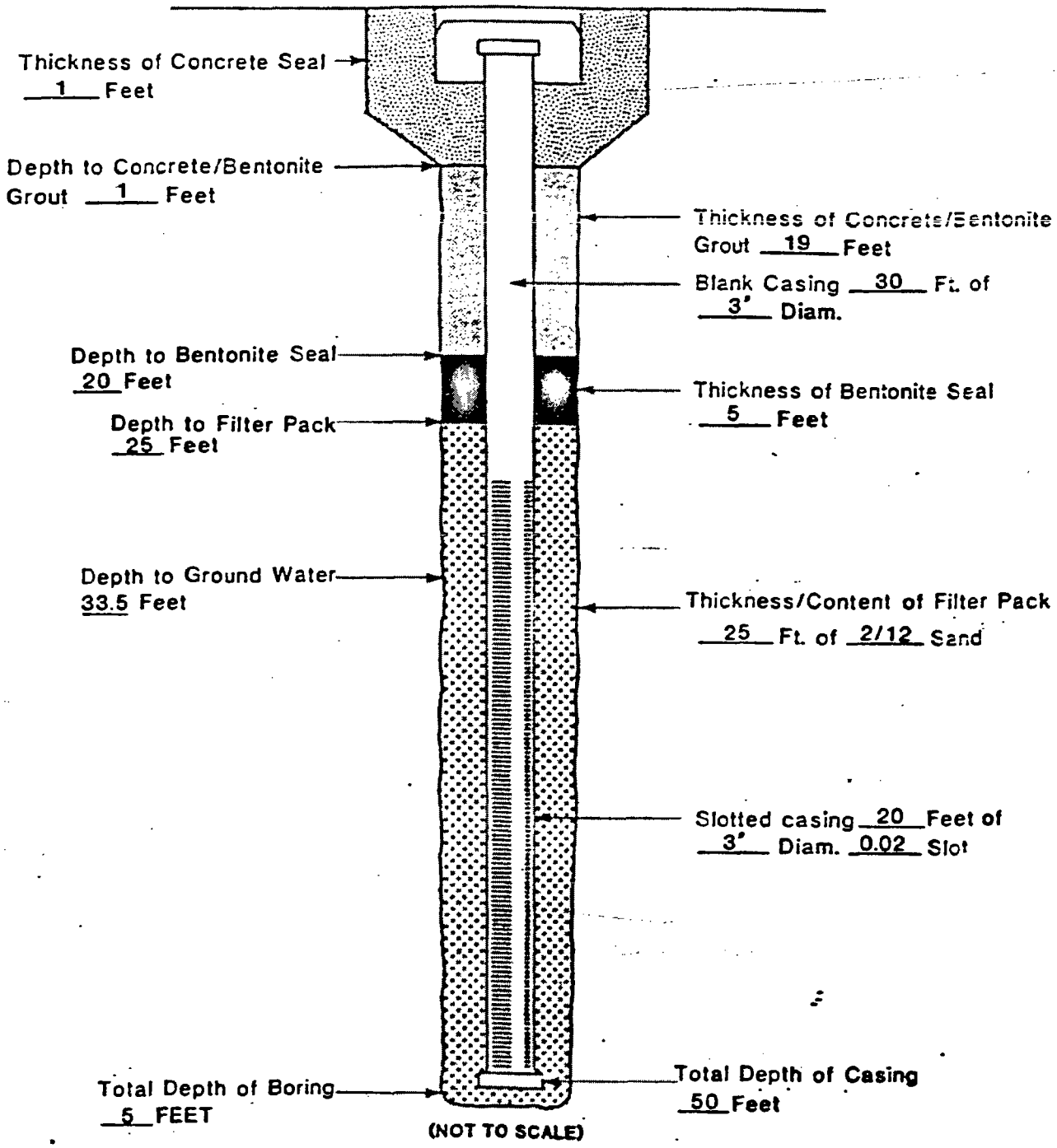

GROUND-WATER MONITORING WELL

12140 Slauson Avenue, Santa Fe Springs, California
for: Catellus Development Corporation

Project No.
89-31-130-03

Figure No.

Converse Environmental West

GW-3

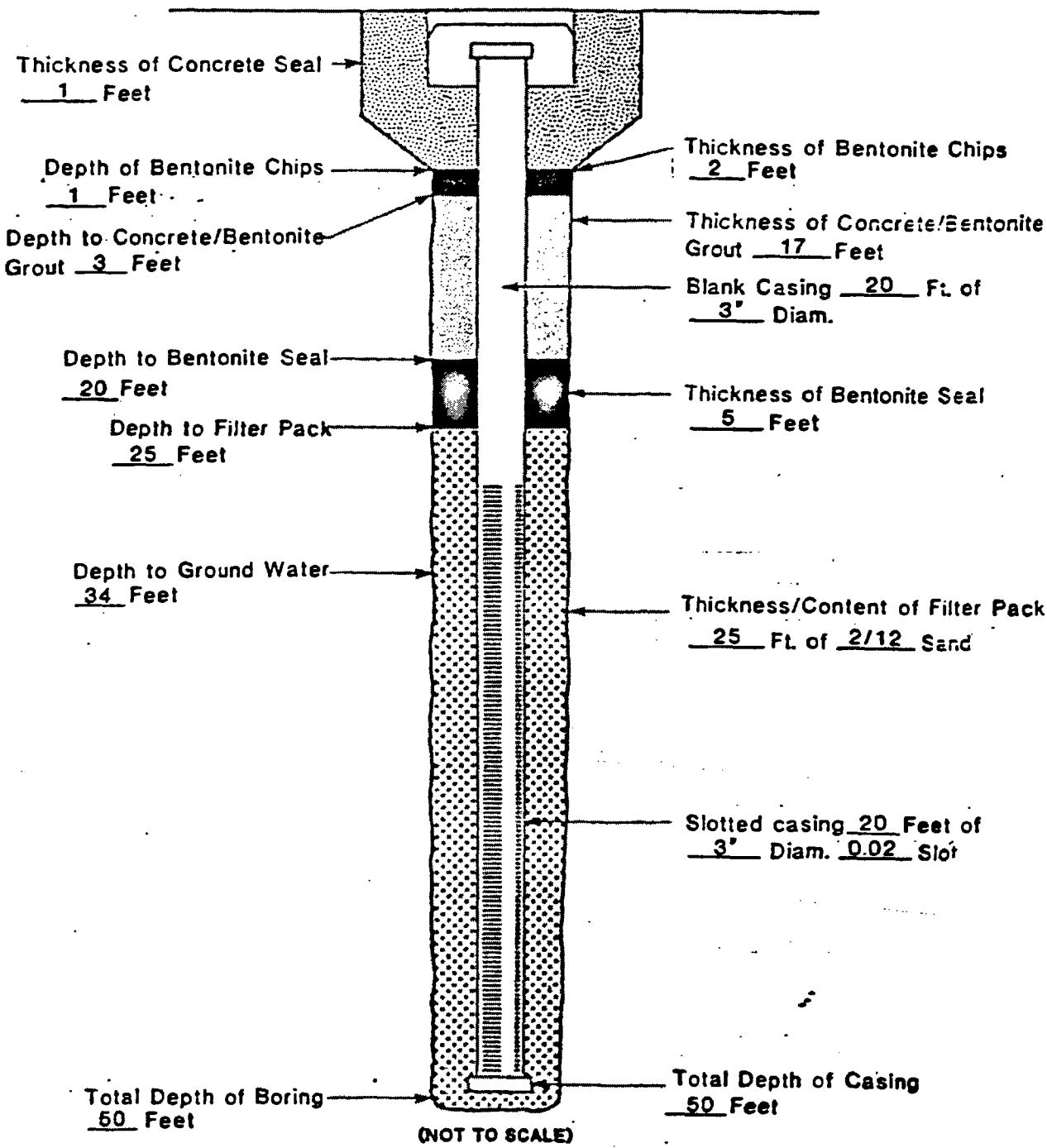

GROUND-WATER MONITORING WELL

12140 Slauson Avenue, Santa Fe Springs, California
for: Catellus Development Corporation

Project No.
89-41-130-03

Converse Environmental West

Figure No.
3

GW-4

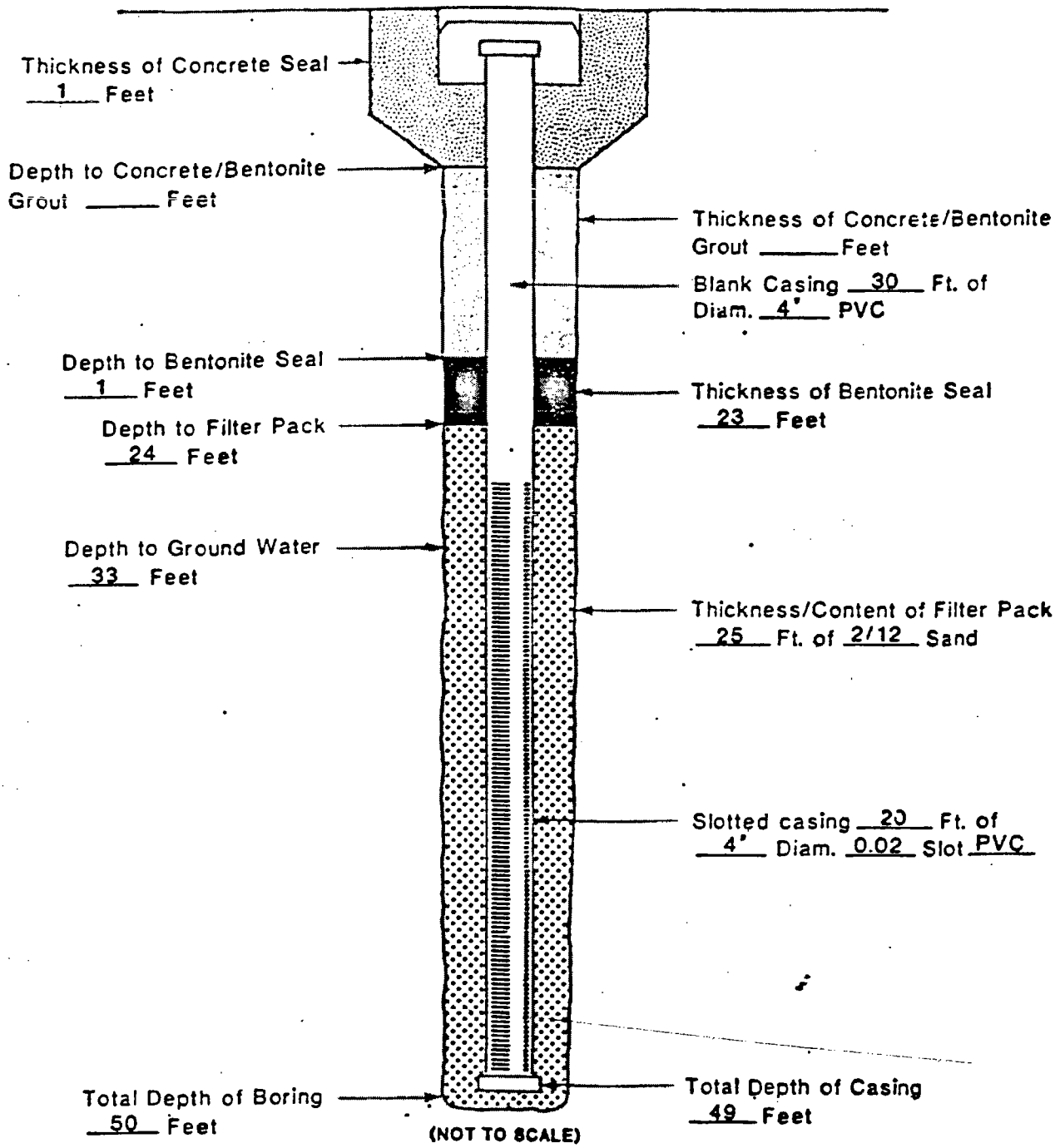

GROUND WATER MONITORING WELL

12140 Slauson Avenue, Santa Fe Springs, California
for: Catellus Development Corporation

Project No.
89-41-130-03

Figure No.

Converse Environmental West

Approved for publication by

GW-5

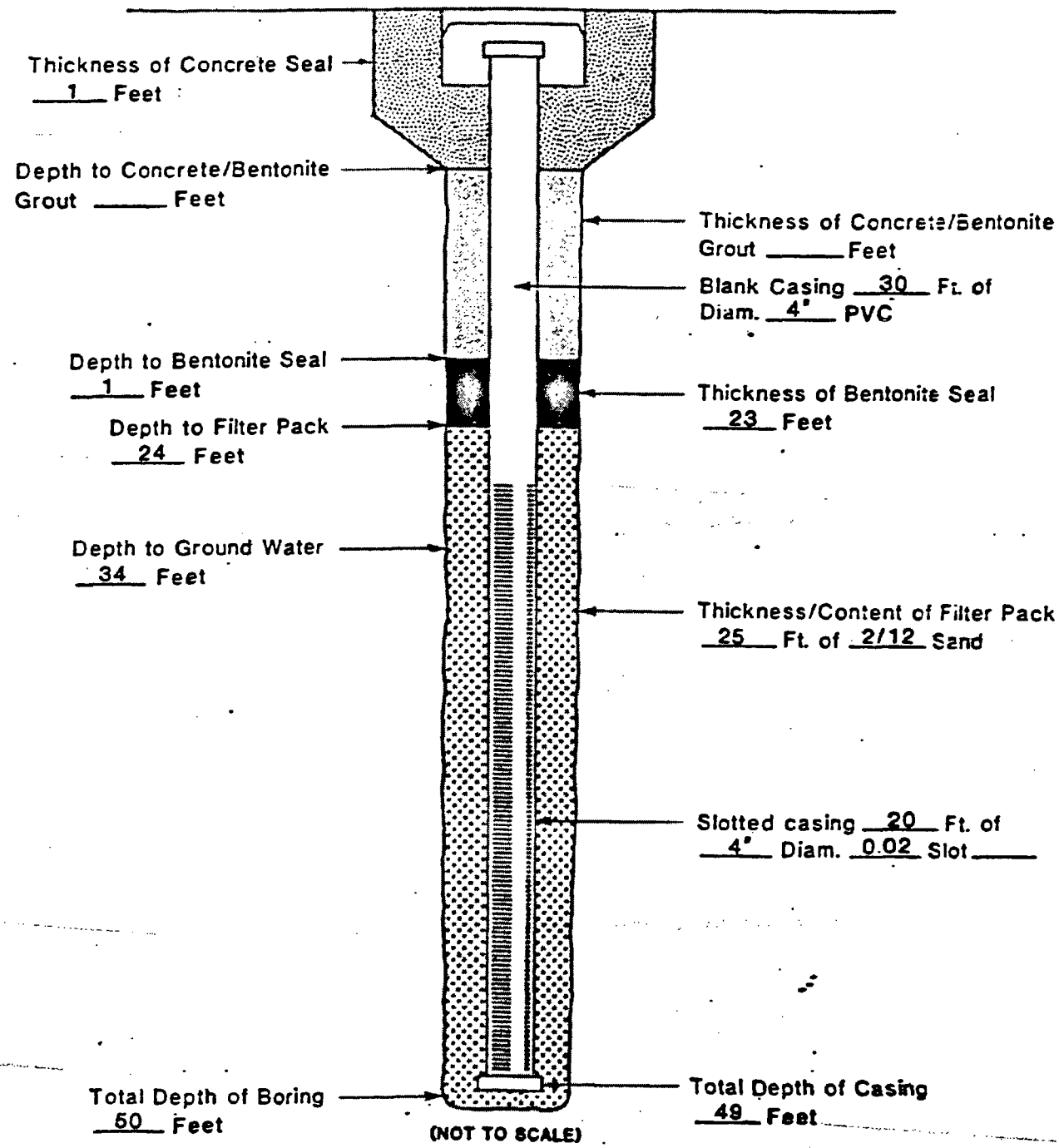

GROUND WATER MONITORING WELL

12140 Slauson Avenue, Santa Fe Springs, California
for: Catellus Development Corporation

Project No.
89-41-130-03

Figure No.

Converse Environmental West

GW-6

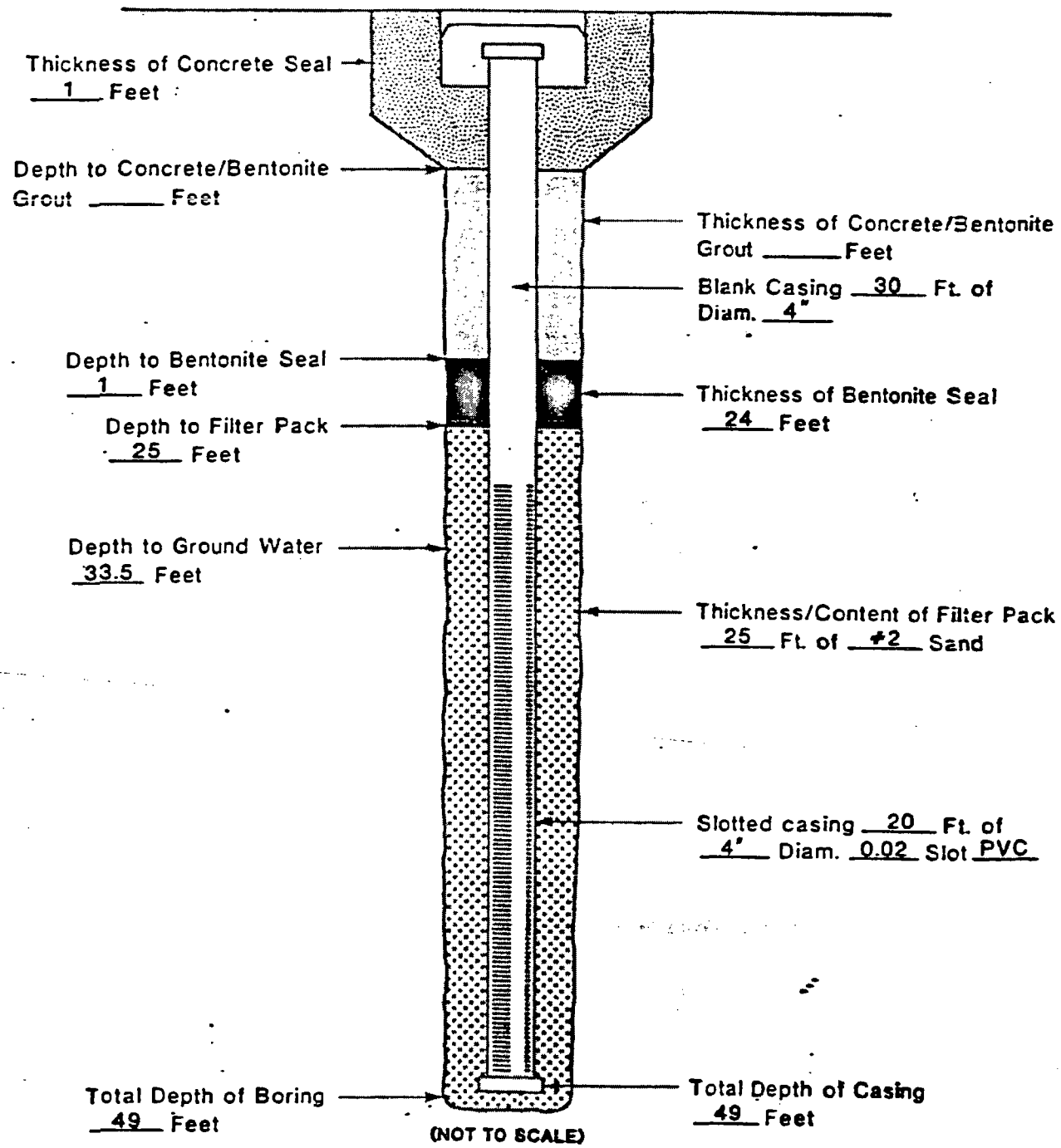

GROUND WATER MONITORING WELL

12140 Slauson Avenue, Santa Fe Springs, California
for: Catellus Development Corporation

Project No.
89-41-130-03

Figure No.

Converse Environmental West

Approved for publication by

GW-7

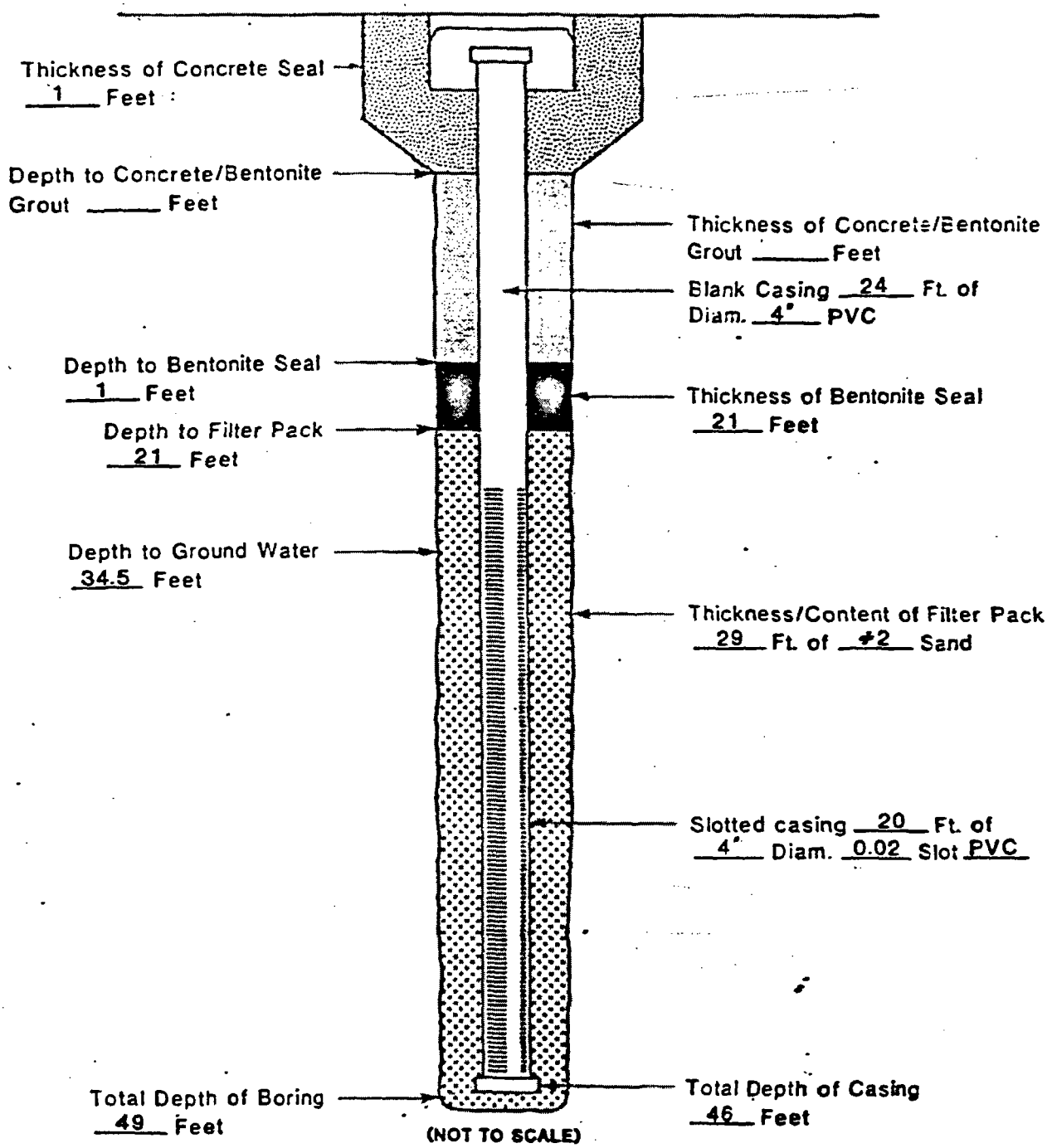

GROUND WATER MONITORING WELL

12140 Slauson Avenue, Santa Fe Springs, California
for: Catellus Development Corporation

Project No.
89-41-130-03

Figure No.

Converse Environmental West

Approved for publication

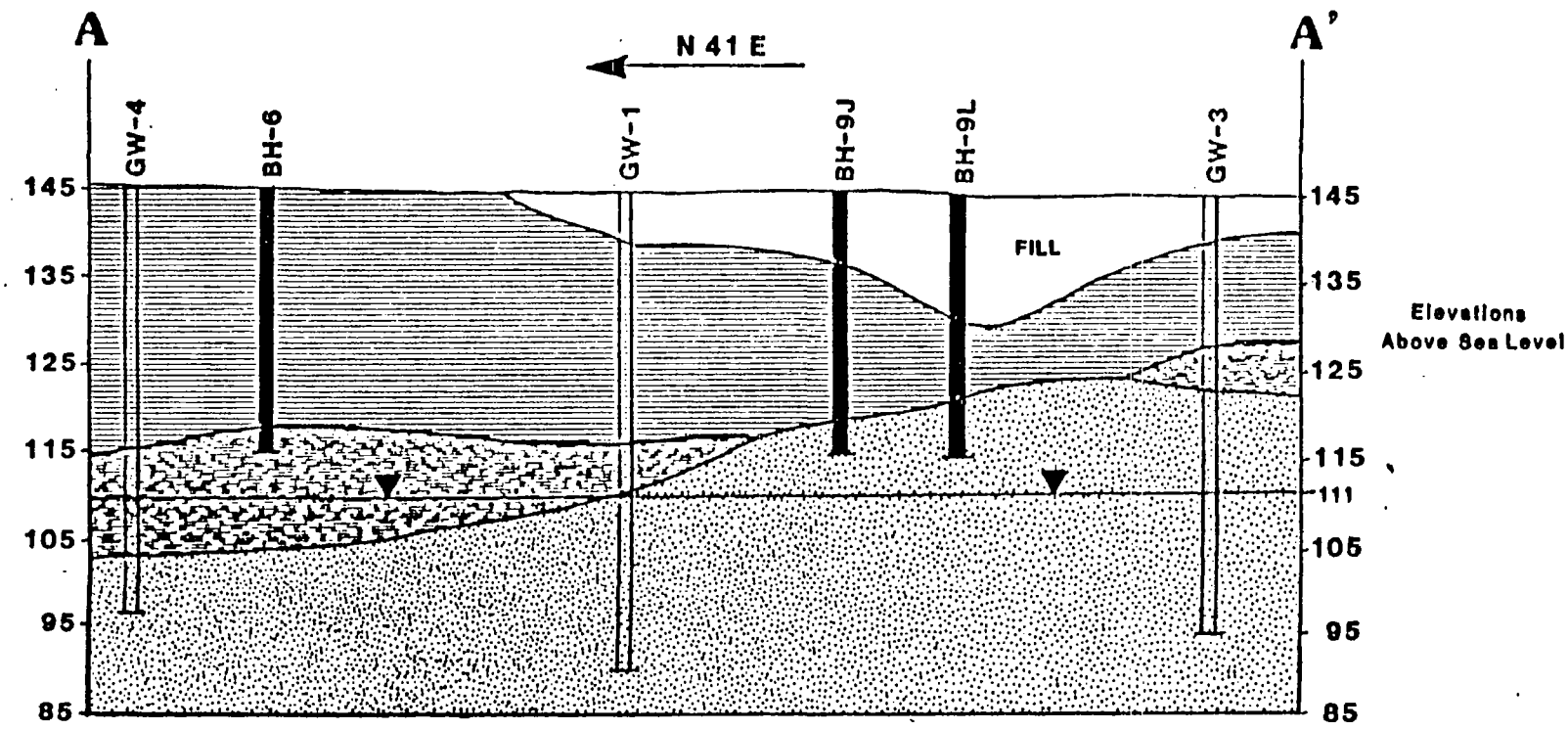

EXPLANATION:

- CLAYS OR SILTS, LITTLE SAND
- SANDY SILT OR SILT WITH SAND
- SAND OR GRAVELLY SAND
- OBSERVED GROUND WATER ELEVATION
- GW-4 GROUND WATER MONITORING WELL
- BH-9J SOIL BORING

HORIZONTAL SCALE: 1" = 150'

VERTICAL SCALE: 1" = 20'

GENERALIZED GEOLOGIC CROSS SECTION A-A'

FORMER CHRYSLER NEW CAR PREPARATION PLANT
12140 Slauson Avenue
Santa Fe Springs, California

Project No.
89-41-130-03

Figure No.
3

Converse Environmental West

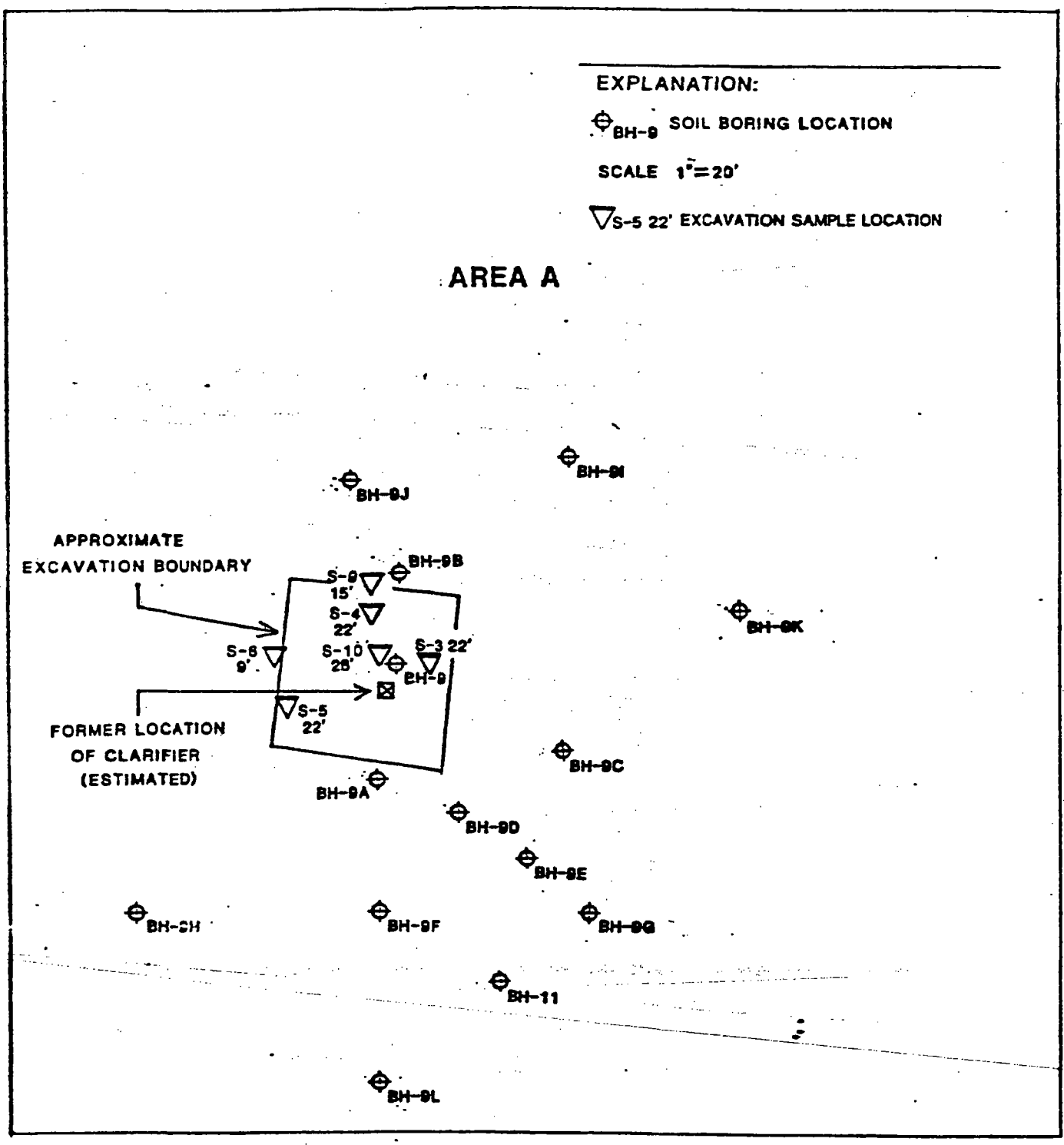

AREA A DETAIL WITH EXCAVATION SAMPLE LOCATIONS

FORMER CHRYSLER NEW CAR PREPARATION PLANT
12140 Slauson Avenue
Santa Fe Springs, California

Project No.
89-41-130-03

CONVERSE ENVIRONMENTAL WEST

Figure No.
4

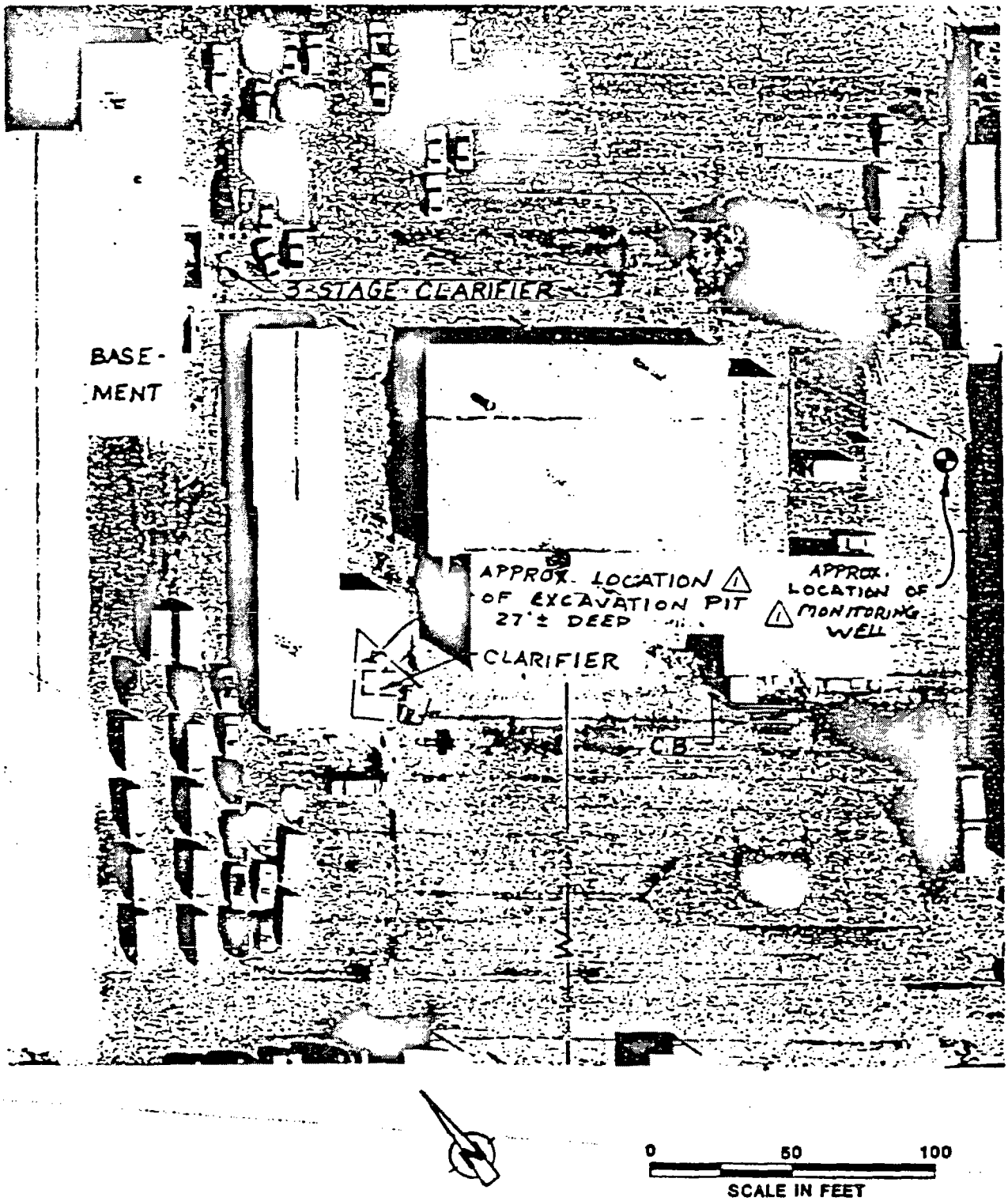

AERIAL PHOTOGRAPH OF FORMER CLARIFIER AND EXCAVATION

FORMER CHRYSLER NEW CAR PREPARATION PLANT
12140 Slauson Avenue
Santa Fe Springs, California

Project No.
89-41-130-03

CONVERSE ENVIRONMENTAL WEST

Figure No.
5

TABLE 1

ANALYTICAL RESULTS OF SOIL SAMPLES
FORMER CHRYSLER NEW CAR PREP PLANT
SANTA FE SPRINGS, CALIFORNIA

BORING No.	DEPTH (ft)	1,1 DCE	PCE	TCE	DCA	TCA	1,2 DCE	CHLOROFORM	B	T	E	X
BH-9	5	ND	570	ND	ND	ND	ND	ND	NA	NA	NA	NA
BH-9	10	ND	55	ND	ND	ND	ND	ND	NA	NA	NA	NA
BH-9A S1	10	15	19	ND	ND	ND	ND	ND	1.6	2.5	ND	0.6
BH-9A S2	20	180	ND	ND	3.6	ND	ND	ND	2.5	5.1	6.7	330
BH-9A S4	30	ND	ND	ND	ND	ND	ND	ND	ND	0.7	ND	ND
BH-9B S4	30	ND	ND	ND	ND	ND	ND	ND	NA	NA	NA	NA
BH-9C S1	10	ND	7.4	ND	ND	ND	ND	ND	0.9	2.1	ND	0.8
BH-9C S2	20	28	ND	ND	ND	ND	ND	ND	2.0	3.6	ND	1.7
BH-9C S3	25	ND	ND	ND	ND	ND	ND	ND	1.0	1.4	ND	0.7
BH-9C S4	30	ND	ND	ND	ND	ND	ND	ND	NA	NA	NA	NA
BH-9D S2	20	ND	ND	ND	ND	ND	ND	ND	ND	ND	ND	ND
BH-9D S4	30	ND	140	32	0.7	1.5	47	1.2	NA	NA	NA	NA
EXCAVATION S-1	33	6.9	14	14	ND	ND	1.7	ND	NA	NA	NA	NA
EXCAVATION S-2	33	ND	3.2	7.9	ND	ND	1.7	N.D	NA	NA	NA	NA
BH-9F S2	25	14	6.9	3.6	ND	ND	100	ND	0.9	0.9	1.4	14
BH-9F S3	30	ND	200	69	ND	ND	34	ND	3.0	3.0	51	250
BH-9G S1	20	ND	1.3	ND	ND	ND	ND	ND	0.8	2.0	ND	0.9
BH-9G S2	25	6.6	9.3	19	ND	ND	24	ND	0.6	0.7	ND	ND
BH-9G S3	30	ND	ND	ND	ND	ND	ND	ND	ND	1.3	ND	ND
BH-9H S1	20	ND	6.7	2.0	ND	ND	ND	ND	ND	1.3	ND	2.1
BH-9H S2	25	17	ND	ND	ND	ND	ND	ND	ND	1.3	ND	ND
BH-9H S3	30	18	ND	ND	ND	ND	ND	ND	ND	1.2	ND	ND

EXPLANATION:

NUMBERS IN PARENTHESES REPRESENT THE HIGHEST CONCENTRATION (IN ug/kg) OF CHLORINATED COMPOUNDS DETECTED IN EACH SOIL BORING. NUMBERS IN BRACKETS REPRESENT THE HIGHEST CONCENTRATION (IN ug/kg) OF AROMATIC COMPOUNDS DETECTED IN EACH SOIL BORING.

ND = NOT DETECTED

NA = NOT ANALYZED

BH-9J (13,10') [29,15']

SOIL BORING LOCATION

CHLORINATED COMPOUNDS: THE FIRST NUMBER DENOTES CHEMICAL CONCENTRATION, AND THE SECOND NUMBER THE SAMPLE COLLECTION DEPTH.

AROMATIC COMPOUNDS: THE FIRST NUMBER DENOTES CHEMICAL CONCENTRATION, AND THE SECOND NUMBER THE SAMPLE COLLECTION DEPTH.

ANALYZED ONE SAMPLE COLLECTED AT 30 FEET BELOW GRADE. RESULT: (ND)

ANALYZED ONE SAMPLE COLLECTED AT 20 FEET BELOW GRADE. RESULT: (ND)

SCALE 1" = 20'

AREA A

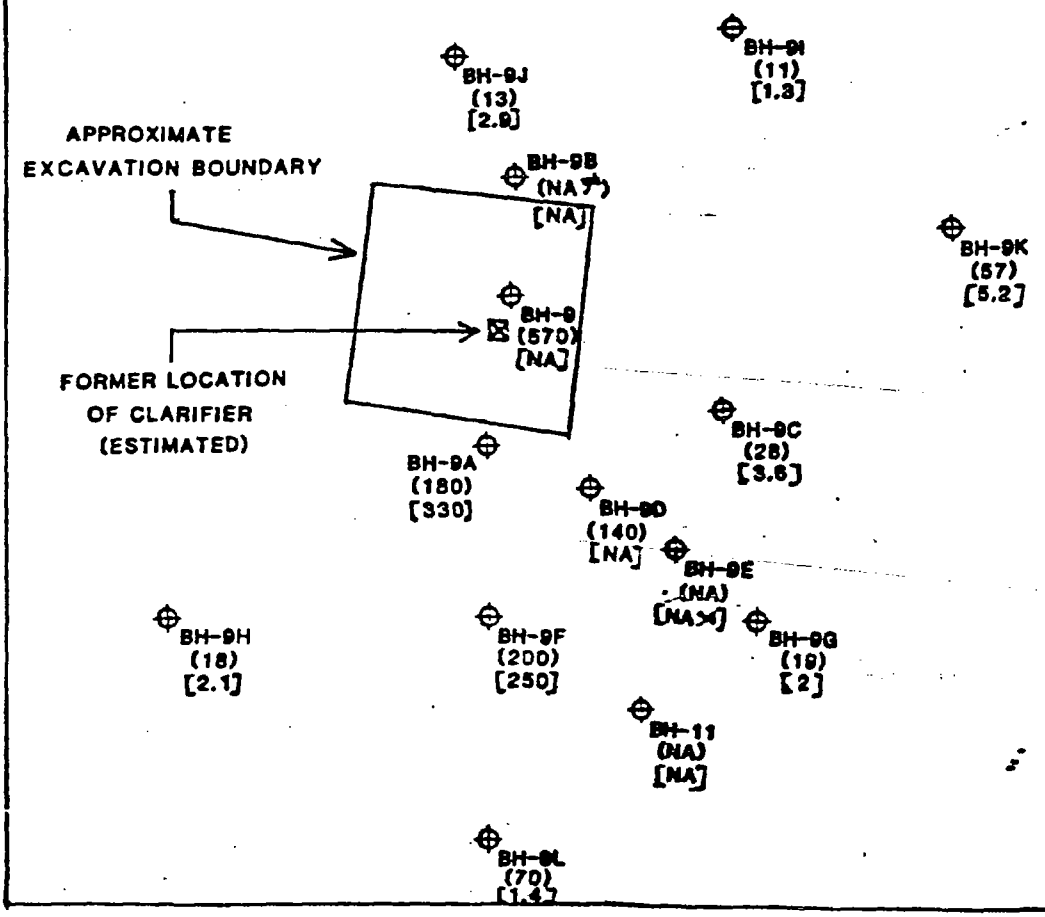

AREA A DETAIL

FORMER CHRYSLER NEW CAR PREPARATION PLANT
12140 SLAUSON AVENUE
SANTA FE SPRINGS, CALIFORNIA

Project No.
89-41-130-03

CONVERSE ENVIRONMENTAL WEST

Figure No.
2

Approved for publication by

TABLE 1

ANALYTICAL RESULTS OF SOIL SAMPLES
FORMER CHRYSLER NEW CAR PREP PLANT
SANTA FE SPRINGS, CALIFORNIA

BORING No.	DEPTH (ft)	1,1 DCE	PCE	TCE	DCA	TCA	1,2 DCE	CHLOROFORM	B	T	E	X
BH-9I S1	20	ND	12	3.8	ND	ND	ND	ND	0.6	1.3	ND	0.5
BH-9I S2	25	10	11	9.5	ND	ND	ND	ND	0.5	0.7	ND	ND
BH-9I S3	30	ND	ND	ND	ND	ND	ND	ND	0.6	1.1	ND	0.5
BH-9J S1	20	ND	13	4.5	ND	ND	ND	ND	1.8	2.9	ND	1.0
BH-9J S2	25	ND	ND	ND	ND	ND	ND	ND	0.9	2.7	ND	0.9
BH-9J S3	30	ND	ND	ND	ND	ND	ND	ND	0.5	1.2	ND	0.5
BH-9K S1	20	38	ND	ND	ND	ND	ND	ND	1.2	2.4	ND	0.9
BH-9K S2	25	57	ND	1.6	ND	ND	ND	ND	2.3	5.2	0.6	3.3
BH-9K S3	30	53	ND	ND	ND	ND	ND	ND	0.7	1.5	ND	1.5
BH-9L S1	20	32	8.9	17	ND	ND	11	ND	0.7	1.3	ND	0.5
BH-9L S2	25	70	ND	ND	ND	ND	ND	ND	0.7	1.4	ND	0.8
BH-9L S3	30	25	ND	ND	ND	ND	ND	ND	ND	2.2	ND	1.5

Units: ug/kg
Detection Limits: 0.5 ug/kg
ND: Not Detected
NA: Not Analyzed

1,1 DCE: 1,1 Dichloroethene
PCE: Tetrachloroethene
TCE: Trichloroethene
DCA: 1,1-Dichloroethane
TCA: 1,1,1-Trichloroethane
1,2-DCE: CIS-1,2 Dichloroethylene
B: Benzene
T: Toluene
E: Ethylbenzene
X: Xylenes

TABLE 2

ANALYTICAL RESULTS OF SOIL SAMPLES
FORMER CHRYSLER NEW CAR PREP PLANT
SANTA FE SPRINGS, CALIFORNIA

Boring #	Depth	DCE	PCE	TCE	TCA	CHLOROFORM	TRICHLOROFLOROMETHANE
GW-1 S1	5	ND	ND	ND	ND	ND	ND
GW-1 S2	10	ND	ND	ND	ND	ND	ND
GW-1 S3	15	ND	ND	ND	ND	ND	ND
GW-1 S4	20	ND	ND	ND	ND	ND	ND
GW-1 S5	25	ND	ND	ND	ND	ND	ND
GW-1 S6	30	ND	ND	ND	ND	ND	ND
GW-1 S7	35	ND	ND	ND	ND	ND	ND
GW-1 S8	40	1.4	6.0	13	ND	ND	ND
GW-1 S9	45	11	9.4	16	1.1	1.1	ND
GW-1 S10	50	25	18	29	ND	ND	ND
GW-2 S6	30	16	ND	ND	ND	ND	ND
GW-2 S7	35	57	18	85	ND	ND	12
GW-2 S9	45	41	1.6	16	ND	0.7	0.6
GW-3 S6	30	51	ND	ND	ND	ND	ND
GW-3 S7	35	61	24	56	ND	ND	5.9
GW-3 S9	45	51	6.4	13	ND	ND	1.0
GW-3 S10	50	42	1.3	4.9	ND	ND	ND

Units: dg/kg
Detection Limits: 0.5 ug/kg
ND: Not Detected
DCE: 1,1-Dichorloethene
PCE: Tetrachloroethene
TCE: Trichloroethene
TCA: 1,1,1-Trichloroethane

TABLE 3

ANALYTICAL RESULTS OF GROUND WATER SAMPLES
FORMER CHRYSLER NEW CAR PREP PLANT
SANTA FE SPRINGS, CALIFORNIA

WELL #	DCE	PCE	TCE	TCA	CHLOROFORM	TRICHLOROFLUOROMETHANE	BENZENE
GW-1, S1*	490	290	370	ND	ND	180	NA
GW-1,S1**	630	250	430	ND	ND	190	NA
GW-2, S1*	200	110	470	ND	ND	88	NA
GW-2,S1**	180	78	480	ND	ND	67	NA
GW-3, S1*	850	520	450	14	ND	290	NA
GW-3, S1**	1200	390	380	ND	ND	310	NA
GW-4, S1	1400	400	340	13	ND	270	10
GW-5, S1	110	29	150	ND	ND	27	ND
GW-6, S1	4.2	2.1	63.2	ND	1.4	ND	ND
GW-7, S1	130	160	500	ND	ND	28	ND

Units: ug/l
Detection Limits: 0.5 ug/l
ND: Not Detected
NA: Not Analyzed
DCE: 1,1 - Dichloroethene
PCE: Tetrachloroethene
TCE: Trichloroethene
TCA: 1,1,1 - Trichloroethane
*: Samples collected on November 28, 1990
**: Samples collected on December 3, 1990

TABLE 4

ANALYTICAL RESULTS OF STOCKPILE AND EXCAVATION SOIL SAMPLES
FORMER CHRYSLER NEW CAR PREP PLANT
SANTA FE SPRINGS, CALIFORNIA

SAMPLE No.	DEPTH (ft)	TPH*	1,1 DCE	PCE	TCE	DCA	TCA	1,2 DCE	CHLOROFORM	B	T	E	X
S-3	22	13,000	ND	410	90	ND	ND	220	ND	ND	ND	200	1,600
S-4	22	6,200	ND	2,100	160	ND	ND	460	ND	ND	ND	810	18,000
S-5	22	360	ND	3,000	340	19	83	1,200	88	ND	300	2,700	11,000
S-6	9	ND	ND	4.8	0.6	ND	ND	ND	ND	ND	ND	ND	1.6
S-9	15	ND	ND	14	1.5	ND	ND	ND	ND	ND	ND	ND	ND.
S-10	28	440	ND	180	4.4	ND	ND	ND	ND	ND	4.2	4.0	55
SP-S1	6"	180	ND	20	ND	ND	ND	ND	ND	ND	ND	7.7	95

Units: ug/kg (ppb)
Detection Limits: 0.5 ug/kg
S-3 DL x 50
S-4 DL x 50
S-5 DL x50

ND: Not Detected

TPH*: Total Petroleum Hydrocarbons
UNITS: mg/kg(ppm)

1,1 DCE: Dichloroethene
PCE: Tetrachloroethene
TCE: Trichloroethene
DCA: 1,1-Dichloroethane
TCA: 1,1,1-Trichloroethane
1,2-DCE: CIS-1,2 Dichloroethylene
B: Benzene
T: Toluene
E: Ethylbenzene
X: Xylenes

TABLE 5

ANALYTICAL RESULTS OF QA/QC SAMPLES
FORMER CHRYSLER NEW CAR PREP PLANT
SANTA FE SPRINGS, CALIFORNIA

SAMPLE #	DCE	PCE	TCE	TCA	CHLOROFORM	TRICHLOROFLUOROMETHANE	BENZENE
Field Blank GW-2 12/3/90	ND	ND	ND	ND	ND	ND	ND
Field Blank #2 12/11/90	ND	ND	ND	ND	ND	ND	ND
Field Blank GW-5 12/12/90	ND	ND	ND	ND	ND	ND	ND
Equipment Blank Rig Tank 12/5/90	ND	ND	ND	ND	2.0	ND	ND

Units: ug/l
Detection Limits: 0.5 ug/l
ND: Not Detected
NA: Not Analyzed
DCE: 1,1 - Dichloroethene
PCE: Tetrachloroethene
TCE: Trichloroethene
TCA: 1,1,1 - Trichloroethane

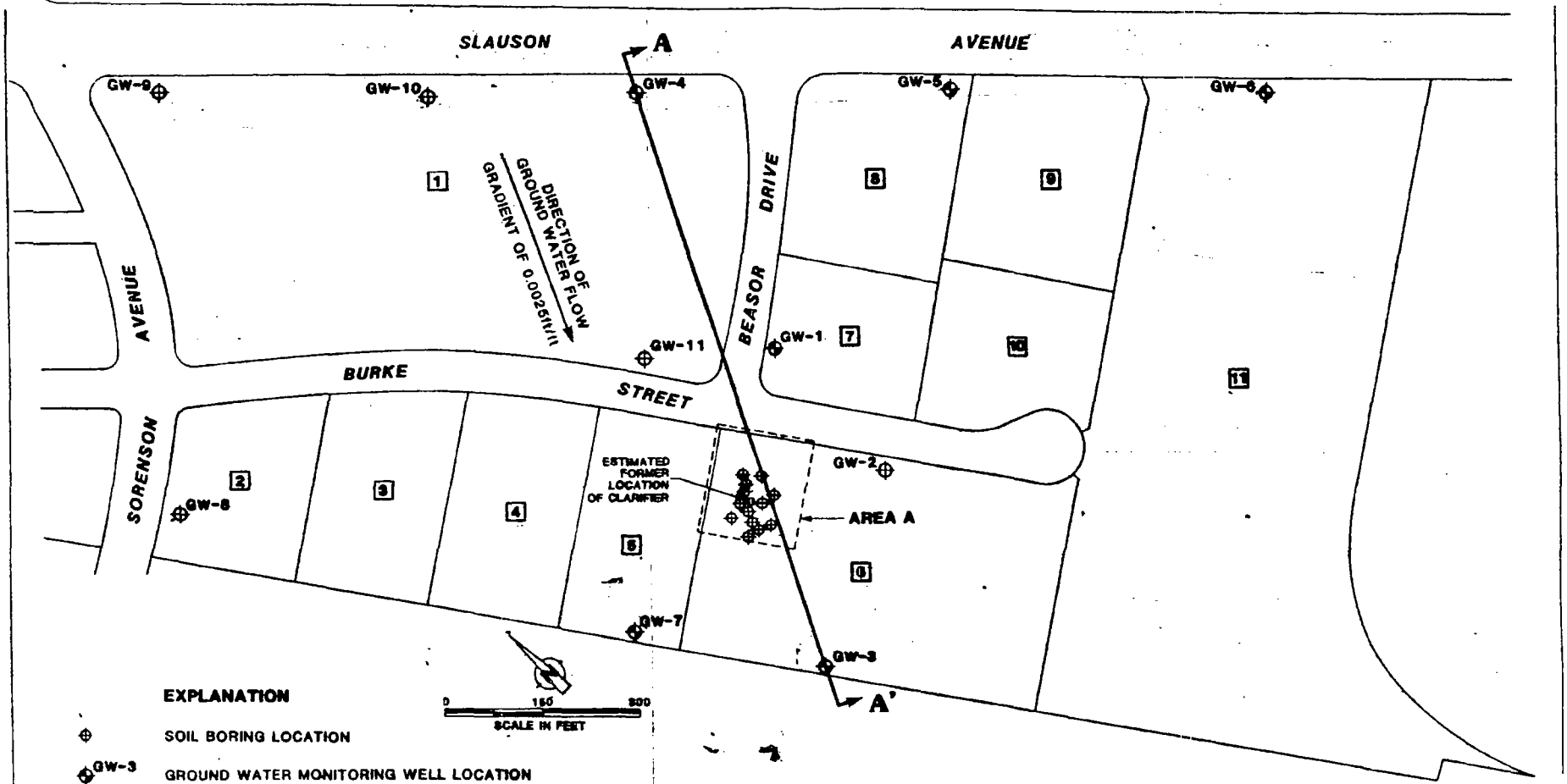

EXPLANATION

- SOIL BORING LOCATION
- GW-3 GROUND WATER MONITORING WELL LOCATION
- GW-8 PROPOSED GROUND WATER MONITORING WELL LOCATION
- 3 LAND PARCEL NUMBER
- A — A' GENERALIZED GEOLOGIC CROSS SECTION

SITE PLAN WITH SOIL BORING and WELL LOCATIONS

FORMER CHRYSLER NEW CAR PREPARATION PLANT
12140 Slauson Avenue
Santa Fe Springs, California

Converse Environmental West

Scale	1" = 150'
Date	12/28/90
Prepared By	MKT
Checked By	JCY
Approved By	RHW
Project No	89-41-130-03
Figure No	1