Chlorine Exhaust Fan – Product Data

12-009 AGVIQ Seamen's Neck Road
Specs section 238223 - Appendix C
Quantity : (1)
Location : Chlorine Room

Bulletin TUB05

PENN BARRY

CHLORINE EXHAUST FAN

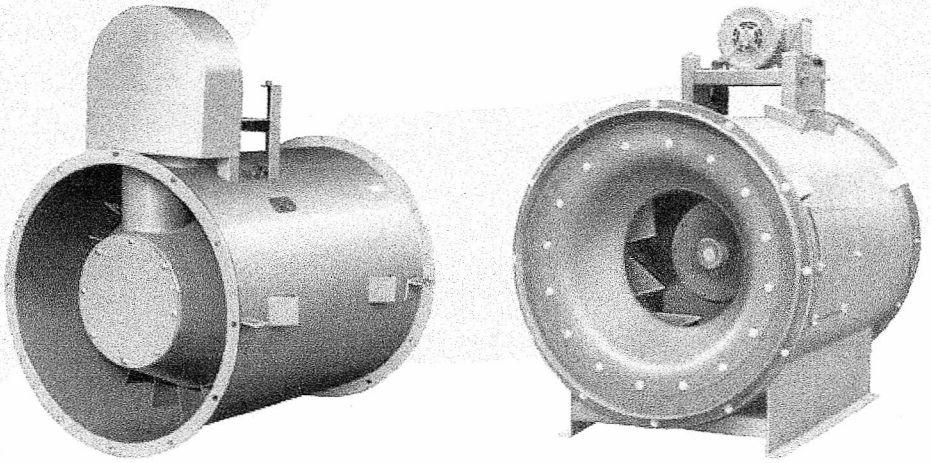

TUBULAR INLINE CENTRIFUGAL FANS

Model: TUB
Airfoil and Backward Inclined
Class I, II and III Belt Drive

MOVING YOUR WAY

Industrial Fan Schedule

Job Name: Aqua-New York

Job Notes:

PENN BARRY

Tag /Mark	IndFan1	IndFan1: Selected Acc		
QTY	1	Unit Material - 304SS		
Product Line	TUB	Arrangement - 9HB		
Model	TUB 090	Access Door		
Class	1	Bearings - 40K		
Flow Rate- (CFM)	320	Isolator - Spring (unhoused)		
SP	1.50			
Temperature (F)	70			
Altitude (in)	0			
Density (Lb/ft^3)	0			
FAN RPM	2635			
BHP (op)	0.27			
BHP (70)	0.27			
Tip Speed (ft/min)	6342			
Outlet Vel (ft/min)	368			
Fan Diameter (in)	9.2			
Torque	9			
Motor Position	A			
Motor Frame Size	143T			
Motor Mounting	Factory Supply, Factory Mounted			
AMP Rating				
Disconnect Switch				
Drive Kit	Adjustable			
Motor HP	1 HP			
Motor RPM	2 Pole Motor			
Motor Enclosure	ODP			
Motor Voltage	115V			
Motor Phase	Single Phase			
Motor Frequency	60 Hz			
Motor Efficiency	Standard			
Fan Notes				
Specials				

PennBarry
1401 N. Plano Road,
Richardson, TX 75081

Job Name: Aqua-New York
Tag / Mark: IndFan1
Date: 3/6/2013

TUBULAR CENTRIFUGAL INLINE

TUB 090

Construction Features

- Heavy gauge steel, continuously welded housing
- Fully welded straightening vanes
- Wheels are standard mild steel construction
- Shafts are precision turned ground & polished solid steel for critical speed of 142% maximum
- Statically and dynamically balanced
- Adjustable motor base
- Heavy duty, self-aligning bearings
- Welded lifting lugs
- Corrosion resistant painted finish

Selected Options & Accessories

Unit Material - 304SS
Arrangement - 9HB
Access Door
Bearings - 40K
Isolator - Spring (unhoused)

MOTOR SPECS

HP	RPM	VOLT	Phase	Enclosure
1 HP	3600	115V	1	ODP

Fra. Size	Position	Drive Kit
143T	A	Adjustable

SOUND POWER

OCTAVE POWER CENTER FREQUENCY (hz)								
63	125	250	500	1K	2K	4K	8K	LP dBA
58	64	69	71	69	65	60	56	76

PERFORMANCE (Altitude (ft): 0 Temperature (F): 70)

Qty	Model	CFM	SP	RPM	BHP 70	Torque	TipSpeed	Outlet V.	Diameter
1	TUB 090	320	1.50	2,635.00	0.27	8.60	6342.42	368.00	9.19

Engineering Data

Approx. Fan Weight (lb.)	Class
N/A	1

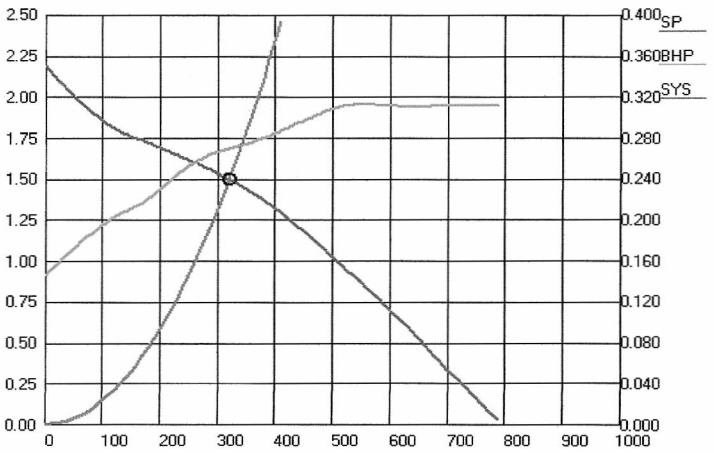

(*Note: drive losses are not included)**

Tubular Centrifugal Fan - TUB
Horizontal Base Mounted - Arrangement 9, Class I & II

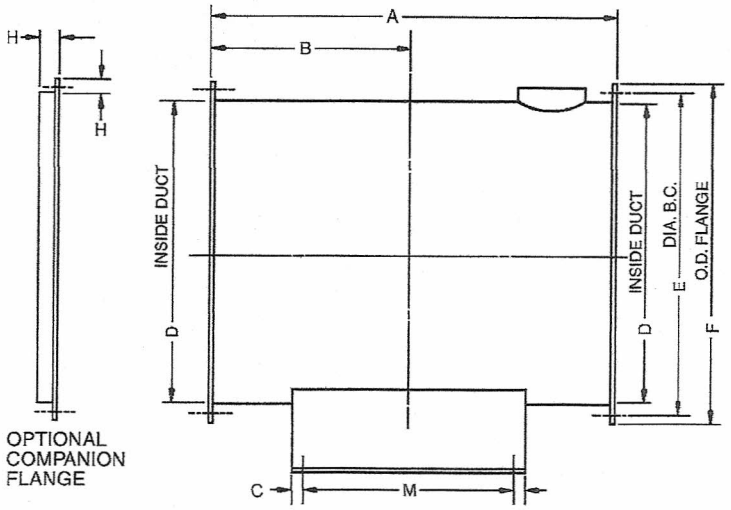

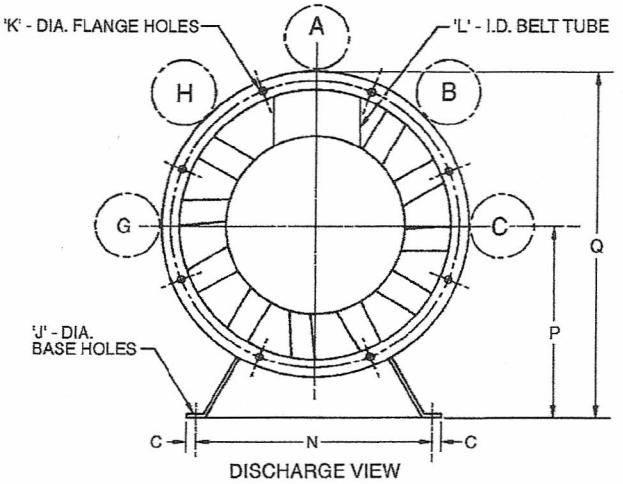

TOLERANCE +/- 1/8

Notes:
1. All units equipped with adjustable motor base.
2. Motor available in A, B, C, G, or H locations only.
3. Fan duct mounting holes:
   90 - 165 = (8) 9/16 dia. holes equally spaced about a "B" dia. bolt circle.
4. Dimensions should not be used for construction. Certified drawings are available upon request.

Dimensional Data

Size	Dimensions - Inches																Max Mtr. Frame
	A	B	C	D	E	F	G - DIA. SFT.		H	J	K	L	M	N	P	Q	
							Class I	Class II									
90	20.38	10.19	1.31	12.75	14.00	14.81	0.75	N/A	1.00	0.50	0.38	4.50	16.75	12.50	8.88	16.50	145T
105	24.00	12.00	1.31	14.75	16.00	16.81	0.75	N/A	1.00	0.50	0.38	5.50	20.38	15.00	9.88	18.50	145T
122	24.75	12.38	0.63	16.56	18.25	19.25	1.188	1.188	1.25	0.44	0.56	5.75	14.75	14.75	12.00	21.63	184T
135	27.38	13.69	0.63	18.25	20.00	21.00	1.188	1.438	1.25	0.44	0.56	6.31	16.75	16.75	13.00	23.50	184T
150	30.38	15.19	0.63	20.25	22.00	23.00	1.188	1.438	1.25	0.44	0.56	7.06	19.75	18.75	14.00	25.50	215T
165	33.38	16.69	0.63	22.31	24.00	25.00	1.438	1.438	1.25	0.44	0.56	7.75	22.75	20.75	15.00	27.50	256T

PENNBARRY™

1401 North Plano Road, Richardson, TX 75081
Ph: 972.234.3202 Fax: 972.497.0468
www.PennBarry.com

Submittal Sheet

Tubular Centrifugal Fan
Horizontal Base Mounted
Arrangement 9, Class I & II

This drawing illustrates our understanding of order requirements. When approved, it represents details for fabrication, as such, PennBarry will not be responsible for revisions in the field or other changes after release for fabrication. Published and protected by PennBarry, Richardson, TX. All rights reserved. May not be reproduced partially or in full without permission from the publisher. No rights conveyed to manufacture partially or in full, use or sell either the method of construction represented or any invention in any way related thereto.

Form ES-TUBHB-9-I & II
Revised March 2005