APPENDIX E

Calibration Gas Certificates / Equipment Calibrations

Maine Oxy
Spec-Air Specialty Gases
Auburn, ME

EPA Protocol

Gas Mixture

Customer:	Maine Oxy/ Spec-Air	Reference#:	071415DH-2
CGA:	590	Certification Date:	07/21/2015
Customer PO#:	199564	Expiration Date:	07/21/2023
Cylinder #:	EB0058020	Pressure, psig:	2000

Method: This standard was analyzed according to EPA Traceability Protocol for Assay and Certification of Gaseous Calibration Standards, Procedure G1 (May 2012).

Analyzed Cylinder-

Components	Certified Concentration	Expanded Uncertainty	Assay Dates
Methane	830ppm	1.0%	7/21/15
Air	Balance	-	-

Reference Standard-

Type/SRM Sample	Cylinder #	Concentration
Methane/ GMIS	ND48382	990ppm
Methane/ SRM	FF23127	98.23ppm

Instrument-

Instrument/ Model	Serial Number	Last Date Calibrated	Analytical Method
Micro GC/ MTI M200	170612	7/21/2015	Thermal Conductivity

These mixtures were prepared gravimetrically using a high load high sensitivity electronic scale. Prior to filling the scale is verified for accuracy throughout the target mass range against applicable NIST traceable weights. We certify that the weights are calibrated to ASTM E617-97 Echelon 1 tolerances.

This report states accurately the results of the investigation made upon the material submitted to the analytical laboratory. Every effort has been made to determine objectively the information requested. However, in connection with this report, Global Calibration Gases LLC shall have no liability in excess of the established charge for this service. Assayed at Global Calibration Gases LLC, Sarasota, Florida. * Analytical methodology does not require correction for analytical interference

The calibration results published in this certificate were obtained using equipment and standards capable of producing results that are traceable to National Institute of Standards and Technology (NIST) and through NIST to the International System of Units (SI). The expanded uncertainties, if included on this certificate, use a coverage factor of k=2 to approximate the 95% confidence level of the measurement, unless otherwise noted. If uncertainties are not included on this certificate, they are available upon request. This calibration certificate applies only to the item described and shall not be reproduced other than in full, without written approval from the calibration facility. Calibration certificates without signatures are not valid. This calibration meets the requirements of ISO/IEC 17025-2005.

*Do not use this standard when cylinder pressure is below 150 psig.

Produced by:
Global Calibration Gases LLC.
1090 Commerce Blvd N
Sarasota, Florida 34243
PGVP Vendor ID.: N22015

Principal Analyst: Ruth Wilson
Date: 07/21/2015

Principal Reviewer: Jennifer Honey
Date: 07/21/2015

MAINE OXY
SPEC-AIR SPECIALTY GASES
PurityPlus

Maine Oxy
Spec-Air Specialty Gases
Auburn, ME

EPA Protocol

Gas Mixture

20

8-26-15

Customer:	Maine Oxy/ Spec-Air	Reference#:	073115SY-V
CGA:	590	Certification Date:	08/05/2015
Customer PO#:	201632	Expiration Date:	08/05/2023
Cylinder #:	SG9166156BAL	Pressure, psig:	2000

Method: This standard was analyzed according to EPA Traceability Protocol for Assay and Certification of Gaseous Calibration Standards, Procedure G1 (May 2012).

Analyzed Cylinder-

Components	Certified Concentration	Expanded Uncertainty	Assay Dates
Methane	505ppm	0.9%	08/05/15
Air	Balance	-	-

Reference Standard-

Type/SRM Sample	Cylinder #	Concentration
Methane/ GMIS	GCG-4745983Y	250ppm
Methane/ SRM	FF23127	98.23ppm

Instrument-

Instrument/ Model	Serial Number	Last Date Calibrated	Analytical Method
Micro GC/ MTI M200	170612	8/5/2015	Thermal Conductivity

These mixtures were prepared gravimetrically using a high load high sensitivity electronic scale. Prior to filling the scale is verified for accuracy throughout the target mass range against applicable NIST traceable weights. We certify that the weights are calibrated to ASTM E617-97 Echelon 1 tolerances.

This report states accurately the results of the investigation made upon the material submitted to the analytical laboratory. Every effort has been made to determine objectively the information requested. However, in connection with this report, Global Calibration Gases LLC shall have no liability in excess of the established charge for this service. Assayed at Global Calibration Gases LLC, Sarasota, Florida. * Analytical methodology does not require correction for analytical interference

The calibration results published in this certificate were obtained using equipment and standards capable of producing results that are traceable to National Institute of Standards and Technology (NIST) and through NIST to the International System of Units (SI). The expanded uncertainties, if included on this certificate, use a coverage factor of k=2 to approximate the 95% confidence level of the measurement, unless otherwise noted. If uncertainties are not included on this certificate, they are available upon request. This calibration certificate applies only to the item described and shall not be reproduced other than in full, without written approval from the calibration facility. Calibration certificates without signatures are not valid. This calibration meets the requirements of ISO/IEC 17025-2005.

*Do not use this standard when cylinder pressure is below 150 psig.

GLOBAL CALIBRATION GASES LLC

Produced by:
Global Calibration Gases LLC.
1090 Commerce Blvd N
Sarasota, Florida 34243
PGVP Vendor ID.: N22015

Principal Analyst: Ruth Williams
Date: 08/05/2015

Principal Reviewer: Jennifer Haney
Date: 08/05/2015

MAINE Plus

Maine Oxy
Spec-Air Specialty Gases
Auburn, ME

EPA Protocol Gas Mixture

Customer:	Maine Oxy/ Spec-Air	Reference#:	040513SY
CGA:	590	Certification Date:	6/07/2013
Customer PO#:	130150	Expiration Date:	6/07/2021
Cylinder #:	EB0023533	Pressure, psig:	2000

Method: This standard was analyzed according to EPA Traceability Protocol for Assay and Certification of Gaseous Calibration Standards, Procedure G1 (September 1997).

Analyzed Cylinder-

Components	Certified Concentration	Total Uncertainty
Methane	275.0ppm	0.4%
Air	Balance	-

Reference Standard-

Type/SRM Sample	Cylinder #	Concentration
Methane/ GMIS	EB0019164	440ppm

Instrument-

Instrument/ Model	Serial Number	Last Date Calibrated	Analytical Method
Micro GC/MTI M200	170612	6/7/2013	TCD

These mixtures were prepared gravimetrically using a high load high sensitivity electronic scale. Prior to filling the scale is verified for accuracy throughout the target mass range against applicable NIST traceable weights. We certify that the weights are calibrated to ASTM E617-97 Echelon 1 tolerances.

The reported expanded uncertainty of measurement is stated as the combined standard uncertainty of measurement multiplied by the coverage factor k (k=2) such that the coverage probability corresponds to approximately 95 %.

This report states accurately the results of the investigation made upon the material submitted to the analytical laboratory. Every effort has been made to determine objectively the information requested. However, in connection with this report, Global Calibration Gases LLC shall have no liability in excess of the established charge for this service. Assayed at Global Calibration Gases LLC, Sarasota, Florida.

The calibration results published in this certificate were obtained using equipment and standards capable of producing results that are traceable to National Institute of Standards and Technology (NIST) and through NIST to the International System of Units (SI). The expanded uncertainties, if included on this certificate, use a coverage factor of k=2 to approximate the 95% confidence level of the measurement, unless otherwise noted. If uncertainties are not included on this certificate, they are available upon request. This calibration certificate applies only to the item described and shall not be reproduced other than in full, without written approval from the calibration facility. Calibration certificates without signatures are not valid. This calibration meets the requirements of ISO/IEC 17025-2005.

*Do not use this standard when cylinder pressure is below 150 psig.

Produced by: Global Calibration Gases LLC.
1090 Commerce Blvd N
Sarasota, Florida 34243
Accreditation No.: 69191
PGVP Vendor ID.: N12012

GLOBAL CALIBRATION GASES LLC

Principal Analyst: _____
Date: 6/7/2013

Principal Reviewer: _____
Date: 6/7/2013

Spec Air Specialty Gases

22 Albiston Way Auburn, ME 04210
800-292-6218
207-777-6218
Fax 207-777-6215
www.specair.com

Certificate of Analysis

MONTROSE

Date: November 6, 2015

Purchase Order Number:

Order Number:

Primary Standard

Below are the results of the analysis you requested, as reported by our laboratory. Results are in mole percent, unless otherwise indicated. Mixtures are prepared by either partial pressure or gravimetric method. Gas mixtures are traceable to N.I.S.T. weights and/or N.I.S.T. gas mixture reference materials.

Cylinder Number: CC8886 *Lot Number:* 45310-64

Component	*Request*	*Actual*
METHANE	3000 PPM	2981.8 PPM
AIR	BALANCE	BALANCE

Comments:
MIX MADE USING DIGITAL BALANCES CALIBRATED TO NIST TRACEABLE WEIGHTS
NIST CERTIFICATE # 822/275554-07

Expiration Date	Fill Pressure	Technician
November / 2018	2000psig@70F	Kyle Christianson KR

This laboratory is not ISO 17025 accredited for the test or calibration marked with an asterisk.
The only liability of this company for gas which fails to comply with this analysis shall be replacement thereof by the company without extra cost.

Maine Oxy
Spec-Air Specialty Gases
Auburn, ME

EPA Protocol

Gas Mixture

12

Customer:	Maine Oxy/ Spec-Air	Reference#:	080315SY-A
CGA:	590	Certification Date:	08/10/2015
Customer PO#:	201632	Expiration Date:	08/10/2023
Cylinder #:	EB0017088	Pressure, psig:	2000

Method: This standard was analyzed according to EPA Traceability Protocol for Assay and Certification of Gaseous Calibration Standards, Procedure G1 (May 2012).

Analyzed Cylinder-

Components	Certified Concentration	Expanded Uncertainty	Assay Dates
Methane	85.7ppm	0.8%	8/10/15
Air	Balance	-	-

Reference Standard-

Type/SRM Sample	Cylinder #	Concentration
Methane/ GMIS	EB0026425	95.0ppm
Methane/ SRM	FF23127	98.23ppm

Instrument-

Instrument/ Model	Serial Number	Last Date Calibrated	Analytical Method
Micro GC/ MTI M200	170612	8/10/2015	Thermal Conductivity

These mixtures were prepared gravimetrically using a high load high sensitivity electronic scale. Prior to filling the scale is verified for accuracy throughout the target mass range against applicable NIST traceable weights. We certify that the weights are calibrated to ASTM E617-97 Echelon 1 tolerances.

This report states accurately the results of the investigation made upon the material submitted to the analytical laboratory. Every effort has been made to determine objectively the information requested. However, in connection with this report, Global Calibration Gases LLC shall have no liability in excess of the established charge for this service. Assayed at Global Calibration Gases LLC, Sarasota, Florida. * Analytical methodology does not require correction for analytical interference

The calibration results published in this certificate were obtained using equipment and standards capable of producing results that are traceable to National Institute of Standards and Technology (NIST) and through NIST to the International System of Units (SI). The expanded uncertainties, if included on this certificate, use a coverage factor of k=2 to approximate the 95% confidence level of the measurement, unless otherwise noted. If uncertainties are not included on this certificate, they are available upon request. This calibration certificate applies only to the item described and shall not be reproduced other than in full, without written approval from the calibration facility. Calibration certificates without signatures are not valid. This calibration meets the requirements of ISO/IEC 17025-2005.

*Do not use this standard when cylinder pressure is below 150 psig.

Produced by:
Global Calibration Gases LLC.
1090 Commerce Blvd N
Sarasota, Florida 34243
PGVP Vendor ID.: N22015

Principal Analyst: Ruth Wilson
Date: 08/10/2015

Principal Reviewer: Jennifer Honey
Date: 08/10/2015

MAINE

Plus

Maine Oxy
Spec-Air Specialty Gases
Auburn, ME

EPA Protocol
Gas Mixture

Customer:	Maine Oxy/ Spec-Air	Reference#:	120313SY-AB
CGA:	350	Certification Date:	12/09/2013
Customer PO#:	149692	Expiration Date:	12/09/2021
Cylinder #:	EB0051398	Pressure, psig:	2000

Method: This standard was analyzed according to EPA Traceability Protocol for Assay and Certification of Gaseous Calibration Standards, Procedure G1 (May 2012).

Analyzed Cylinder-

Components	Certified Concentration	Expanded Uncertainty
Methane	52.2ppm	0.4%
Air	Balance	-

#16

Reference Standard-

Type/SRM Sample	Cylinder #	Concentration
Methane/ GMIS	EB0024919	64.0ppm

Instrument-

Instrument/ Model	Serial Number	Last Date Calibrated	Analytical Method
Gow Mac/23-500	X35606	12/9/2013	FID

These mixtures were prepared gravimetrically using a high load high sensitivity electronic scale. Prior to filling the scale is verified for accuracy throughout the target mass range against applicable NIST traceable weights. We certify that the weights are calibrated to ASTM E617-97 Echelon 1 tolerances.

The reported expanded uncertainty of measurement is stated as the combined standard uncertainty of measurement multiplied by the coverage factor k (k=2) such that the coverage probability corresponds to approximately 95 %.

This report states accurately the results of the investigation made upon the material submitted to the analytical laboratory. Every effort has been made to determine objectively the information requested. However, in connection with this report, Global Calibration Gases LLC shall have no liability in excess of the established charge for this service. Assayed at Global Calibration Gases LLC, Sarasota, Florida.

The calibration results published in this certificate were obtained using equipment and standards capable of producing results that are traceable to National Institute of Standards and Technology (NIST) and through NIST to the International System of Units (SI). The expanded uncertainties, if included on this certificate, use a coverage factor of k=2 to approximate the 95% confidence level of the measurement, unless otherwise noted. If uncertainties are not included on this certificate, they are available upon request. This calibration certificate applies only to the item described and shall not be reproduced other than in full, without written approval from the calibration facility. Calibration certificates without signatures are not valid. This calibration meets the requirements of ISO/IEC 17025-2005.

*Do not use this standard when cylinder pressure is below 150 psig.

Produced by: Global Calibration Gases LLC.
1090 Commerce Blvd N
Sarasota, Florida 34243
Accreditation No.: 69191
PGVP Vendor ID.: N22013

GLOBAL CALIBRATION GASES LLC

Principal Analyst: Dale Hylan
Date: 12/9/2013

Principal Reviewer: Jennie Rooney
Date: 12/9/2013

MAINE SPECIALTY GASES
PurityPlus

Maine Oxy
Spec-Air Specialty Gases
Auburn, ME

EPA Protocol Gas Mixture

#11

Customer:	Maine Oxy/ Spec-Air	Reference#:	082814SY-G
CGA:	590	Certification Date:	09/11/2014
Customer PO#:	173048	Expiration Date:	09/11/2022
Cylinder #:	EB0057655	Pressure, psig:	2000

10-(3-14)

Method: This standard was analyzed according to EPA Traceability Protocol for Assay and Certification of Gaseous Calibration Standards, Procedure G1 (May 2012).

Analyzed Cylinder-

Components	Certified Concentration	Expanded Uncertainty
Methane	29.1 ppm	0.5%
Air	Balance	

Reference Standard-

Type/SRM Sample	Cylinder #	Concentration
Methane/ GMIS	EB0024877	30.5 ppm

Instrument-

Instrument/ Model	Serial Number	Last Date Calibrated	Analytical Method
Micro GC/MTI M200	170812	09/11/2014	TCD

These mixtures were prepared gravimetrically using a high load high sensitivity electronic scale. Prior to filling the scale is verified for accuracy throughout the target mass range against applicable NIST traceable weights. We certify that the weights are calibrated to ASTM E617-97 Echelon 1 tolerances.

This report states accurately the results of the investigation made upon the material submitted to the analytical laboratory. Every effort has been made to determine objectively the information requested. However, in connection with this report, Global Calibration Gases LLC shall have no liability in excess of the established charge for this service. Assayed at Global Calibration Gases LLC, Sarasota, Florida.

The calibration results published in this certificate were obtained using equipment and standards capable of producing results that are traceable to National Institute of Standards and Technology (NIST) and through NIST to the International System of Units (SI). The expanded uncertainties, if included on this certificate, use a coverage factor of k=2 to approximate the 95% confidence level of the measurement, unless otherwise noted. If uncertainties are not included on this certificate, they are available upon request. This calibration certificate applies only to the item described and shall not be reproduced other than in full, without written approval from the calibration facility. Calibration certificates without signatures are not valid. This calibration meets the requirements of ISO/IEC 17025-2005.

*Do not use this standard when cylinder pressure is below 150 psig.

GLOBAL CALIBRATION GASES LLC

Produced by:
Global Calibration Gases LLC.
1090 Commerce Blvd N
Sarasota, Florida 34243
PGVP Vendor ID.: N22014

Principal Analyst: _____
Date: 09/11/2014

Principal Reviewer: _____
Date: 9/12/2014

EASTMOUNT ENVIRONMENTAL SERVICES
Air Quality Specialists

Method 5 Module Pre-Calibration
Using Critical Orifices

Module: EE2
Cal. Date: 10/30/2015 **Exp. Date:** 4/30/2016 **Technician:** S. Thompson

Orifice Number	UJ-40	UJ-48	UJ-55	UJ-63	UJ-73
Orifice Coefficient, K'	0.2309	0.3420	0.4361	0.5908	0.8033
Meter Volume (cf)					
Initial	993.109	900.415	905.650	916.361	926.818
Final	998.193	905.711	916.205	926.459	937.254
Total Volume, V_m (cf)	5.084	5.296	10.555	10.098	10.436
DGM Inlet Temp. (°F)					
Initial	67	67	68	72	73
Final	67	68	72	73	75
DGM Outlet Temp. (°F)					
Initial	67	67	67	70	72
Final	67	67	70	72	74
Avg. DGM Temp., T_m (°F)	67.0	67.3	69.3	71.8	73.5
Ambient Temp., T_{amb} (°F)	67	68	69	72	74
Bar. Pressure, P_{bar} (in. Hg)	29.84	29.84	29.84	29.84	29.84
ΔH	0.29	0.63	1.00	1.85	3.35
Vacuum (in. Hg)	22.0	20.0	18.0	15.0	11.0
Time, θ (min.)	17.00	12.00	19.00	13.00	10.00
Std. Meter Vol., $V_{m(std)}$ (dscf)	5.084	5.298	10.528	10.046	10.386
Std. Or. Vol., $V_{cr(std)}$ (dscf)	5.102	5.330	10.750	9.936	10.373
Y	1.0037	1.0060	1.0211	0.9891	0.9988
$\Delta H@$	1.813	1.801	1.758	1.781	1.759
Y Error (+/- .02)	0.000	-0.002	-0.017	0.015	0.005
$\Delta H@$ Error (+/- .20)	-0.031	-0.019	0.024	0.001	0.024

Average Y	1.0037	Y Pass/Fail	PASS
Average $\Delta H@$	1.783	$\Delta H@$ Pass/Fail	PASS

$$V_{cr(std)} = K' \cdot P_{bar} \cdot \theta / \sqrt{(T_{amb} + 460)}$$

$$Y = V_{cr(std)} / V_{m(std)}$$

$$V_{m(std)} = 17.64 \cdot V_m \cdot (P_{bar} + \Delta H / 13.6) / (T_m + 460)$$

$$\Delta H@ = 0.0319 \cdot \Delta H \cdot (T_m + 460) \cdot \theta^2 / (P_{bar} Y^2 V_m^2)$$

EASTMOUNT ENVIRONMENTAL SERVICES
Air Quality Specialists

Method 5 Module Pre-Calibration
Using Critical Orifices

Module: EE3
Cal. Date: 8/27/2015 **Exp. Date:** 2/25/2016 **Technician:** M. Bruni

Orifice Number	UJ-40	UJ-48	UJ-55	UJ-63	UJ-73
Orifice Coefficient, K'	0.2309	0.3420	0.4361	0.5908	0.8033
Meter Volume (cf)					
Initial	662.840	668.009	673.877	683.793	696.545
Final	668.001	673.868	683.760	696.506	709.621
Total Volume, V_m (cf)	5.161	5.859	9.883	12.713	13.076
DGM Inlet Temp. (°F)					
Initial	77	78	80	85	89
Final	78	80	85	89	95
DGM Outlet Temp. (°F)					
Initial	76	76	77	79	81
Final	76	77	79	81	83
Avg. DGM Temp., T_m (°F)	76.8	77.8	80.3	83.5	87.0
Ambient Temp., T_{amb} (°F)	79	80	82	83	83
Bar. Pressure, P_{bar} (in. Hg)	30.03	30.03	30.03	30.03	30.03
ΔH	0.30	0.61	1.00	1.95	3.95
Vacuum (in. Hg)	24.0	22.0	20.0	18.0	14.0
Time, θ (min.)	17.00	13.00	17.00	16.00	12.00
Std. Meter Vol., $V_{m(std)}$ (dscf)	5.099	5.783	9.718	12.455	12.791
Std. Or. Vol., $V_{cr(std)}$ (dscf)	5.077	5.746	9.563	12.182	12.423
Y	0.9957	0.9936	0.9840	0.9781	0.9712
$\Delta H@$	1.872	1.738	1.754	1.864	2.049
Y Error (+/- .02)	-0.011	-0.009	0.000	0.006	0.013
$\Delta H@$ Error (+/- .20)	-0.017	0.118	0.102	-0.009	-0.194

Average Y	0.9845	Y Pass/Fail	PASS
Average $\Delta H@$	1.855	$\Delta H@$ Pass/Fail	PASS

$V_{cr(std)} = K' \cdot P_{bar} \cdot \theta / \sqrt{(T_{amb} + 460)}$

$Y = V_{cr(std)} / V_{m(std)}$

$V_{m(std)} = 17.64 \cdot V_m \cdot (P_{bar} + \Delta H / 13.6) / (T_m + 460)$

$\Delta H@ = 0.0319 \cdot \Delta H \cdot (T_m + 460) \cdot \theta^2 / (P_{bar} Y^2 V_m^2)$

EASTMOUNT ENVIRONMENTAL SERVICES
Air Quality Specialists

Method 5 Module Pre-Calibration
Using Critical Orifices

Module: EE6
Cal. Date: 7/2/2015 **Exp. Date:** 1/2/2016 **Technician:** Joe Brady

Orifice Number	UJ-40	UJ-48	UJ-55	UJ-63	UJ-73
Orifice Coefficient, K'	0.2309	0.3420	0.4361	0.5908	0.8033
Meter Volume (cf)					
Initial	434.600	486.600	440.000	448.600	462.000
Final	439.875	495.415	448.273	461.251	486.165
Total Volume, V_m (cf)	5.275	8.815	8.273	12.651	24.165
DGM Inlet Temp. (°F)					
Initial	77	85	77	81	87
Final	77	86	81	87	95
DGM Outlet Temp. (°F)					
Initial	73	84	74	76	79
Final	73	84	76	79	83
Avg. DGM Temp., T_m (°F)	75.0	84.8	77.0	80.8	86.0
Ambient Temp., T_{amb} (°F)	74	74	75	75	75
Bar. Pressure, P_{bar} (in. Hg)	29.89	29.89	29.89	29.89	29.89
ΔH	0.31	0.70	1.10	2.00	3.60
Vacuum (in. Hg)	22.5	20.5	19.5	17.0	14.0
Time, θ (min.)	18.00	20.00	15.00	17.00	24.00
Std. Meter Vol., $V_{m(std)}$ (dscf)	5.205	8.550	8.148	12.401	23.552
Std. Or. Vol., $V_{cr(std)}$ (dscf)	5.376	8.847	8.453	12.979	24.914
Y	1.0329	1.0348	1.0374	1.0466	1.0578
$\Delta H@$	1.932	1.957	1.926	1.903	1.849
Y Error (+/- .02)	0.009	0.007	0.004	-0.005	-0.016
$\Delta H@$ Error (+/- .20)	-0.019	-0.043	-0.012	0.010	0.064

Average Y	1.0419	Y Pass/Fail	PASS
Average $\Delta H@$	1.913	$\Delta H@$ Pass/Fail	PASS

$V_{cr(std)} = K' \cdot P_{bar} \cdot \theta / \sqrt{(T_{amb} + 460)}$

$Y = V_{cr(std)} / V_{m(std)}$

$V_{m(std)} = 17.64 \cdot V_m \cdot (P_{bar} + \Delta H / 13.6) / (T_m + 460)$

$\Delta H@ = 0.0319 \cdot \Delta H \cdot (T_m + 460) \cdot \theta^2 / (P_{bar} Y^2 V_m^2)$

PLANT: wTe
LOCATION: Cyclone No. 2
TEST SERIES: Method 5/29
DATE: 11/20/2015
METERBOX EE3

Alternative Method 5 Post-Test Calibration (ALT-009)

Y_{qa} (dry gas meter calibration check value), dimensionless	0.988	0.978	0.984	0.9834
• (total run time), min	60	60	60	60
V_m (meter box volume), dcf	49.467	47.569	47.740	48.259
T_m (absolute average dry gas meter temperature), °R	520.87	531.07	534.17	528.70
P_b (barometric pressure), in. Hg	29.80	29.80	29.80	29.80
0.0319 = (29.92/(460+Tref))*(0.75*0.75), in. Hg/°R * cfm2	0.0319	0.0319	0.0319	0.0319
• H_{avg} (average orifice meter differential), in. H_2O	2.21	1.96	1.99	2.0533333
• H@ (orifice meter calibration coefficient), in. H_2O	1.855	1.855	1.855	1.855
M_d (dry molecular weight of stack gas), lb/lb-mole	28.836	28.836	28.836	28.836
29 (dry molecular weight of air), lb/lb-mole	29	29	29	29
13.6 (specific gravity of mercury)	13.6	13.6	13.6	13.6

Inputs	Run 1	Run 2	Run 3
Total Run Time	60	60	60
Meter Box Volume Intial	92.161	141.882	189.715
Meter Box Volume Final	141.628	189.451	237.455
Average Dry Gas Meter Temp (Inlet and Outlet Average)	61	71	75
Barometric Pressure	29.8	29.8	29.8
Delta H Avg for run	2.21	1.96	1.99
Delta H of the Meter Box	1.855	1.855	1.855
Dry Molecular Weight of Stack Gas (Md) lb/lb-mole	28.836	28.836	28.836

Meter Box Y Check		
Y + 5%	1.034	PASS
Y For the Box	0.9845	
Y - 5%	0.935	
% Change	0.11	

PLANT: wTe
LOCATION: Cyclone 1
TEST SERIES: Method 5/29
DATE: 11/20/2015
METERBOX EE2

Alternative Method 5 Post-Test Calibration (ALT-009)

Y_{qa} (dry gas meter calibration check value), dimensionless	1.010	1.009	0.998	1.0057
• (total run time), min	60	60	60	60
V_m (meter box volume), dcf	49.753	49.909	49.947	49.870
T_m (absolute average dry gas meter temperature), °R	520.67	520.67	521.37	520.90
P_b (barometric pressure), in. Hg	29.81	29.81	29.81	29.81
0.0319 = (29.92/(460+Tref))*(0.75*0.75), in. Hg/°R * cfm2	0.0319	0.0319	0.0319	0.0319
• H_{avg} (average orifice meter differential), in. H_2O	2.24	2.25	2.20	2.23
• H@ (orifice meter calibration coefficient), in. H_2O	1.780	1.780	1.780	1.780
M_d (dry molecular weight of stack gas), lb/lb-mole	28.800	28.800	28.800	28.8
29 (dry molecular weight of air), lb/lb-mole	29	29	29	29
13.6 (specific gravity of mercury)	13.6	13.6	13.6	13.6

Inputs	Run 8	Run 9	Run 10
Total Run Time	60	60	60
Meter Box Volume Intial	290.890	340.896	391.589
Meter Box Volume Final	340.643	390.805	441.536
Average Dry Gas Meter Temp (Inlet and Outlet Average)	61	61	62
Barometric Pressure	29.81	29.81	29.81
Delta H Avg for run	2.24	2.25	2.20
Delta H of the Meter Box	1.78	1.78	1.78
Dry Molecular Weight of Stack Gas (Md) lb/lb-mole	28.8	28.8	28.8

Meter Box Y Check		
Y + 5%	1.054	PASS
Y For the Box	1.0037	
Y - 5%	0.954	
% Change	0.20	

PLANT: wTe
LOCATION: Cyclone 3
TEST SERIES: Method 5/29
DATE: 11/20/2015
METERBOX EE6

Alternative Method 5 Post-Test Calibration (ALT-009)

Y_{qa} (dry gas meter calibration check value), dimensionless	1.016	1.019	1.012	1.0154
• (total run time), min	60	60	60	60
V_m (meter box volume), dcf	44.313	43.950	43.786	44.016
T_m (absolute average dry gas meter temperature), °R	518.67	526.47	526.47	523.87
P_b (barometric pressure), in. Hg	29.81	29.81	29.81	29.81
0.0319 = (29.92/(460+Tref))*(0.75*0.75), in. Hg/°R * cfm2	0.0319	0.0319	0.0319	0.0319
• H_{avg} (average orifice meter differential), in. H_2O	1.94	1.89	1.85	1.8933333
• H@ (orifice meter calibration coefficient), in. H_2O	1.913	1.913	1.913	1.913
M_d (dry molecular weight of stack gas), lb/lb-mole	28.836	28.836	28.836	28.836
29 (dry molecular weight of air), lb/lb-mole	29	29	29	29
13.6 (specific gravity of mercury)	13.6	13.6	13.6	13.6

Inputs	Run 1	Run 5	Run 10
Total Run Time	60	60	60
Meter Box Volume Intial	683.436	727.8	772.015
Meter Box Volume Final	727.749	771.750	815.801
Average Dry Gas Meter Temp (Inlet and Outlet Average)	59	67	67
Barometric Pressure	29.81	29.81	29.81
Delta H Avg for run	1.9	1.9	1.9
Delta H of the Meter Box	1.913	1.913	1.913
Dry Molecular Weight of Stack Gas (Md) lb/lb-mole	28.836	28.836	28.836

Meter Box Y Check		
Y + 5%	1.094	PASS
Y For the Box	1.0419	
Y - 5%	0.990	
% Change	2.55	

EASTMOUNT ENVIRONMENTAL SERVICES
Air Quality Specialists

NOZZLE CALIBRATION SHEET

Project # : 15-098 Test Date : 11/18/15

Tech : Joe Brady Caliper ID: CLP-2

	Nozzle #	Nozzle #	Nozzle #
Point #	Location #2	Location #3	Location #1 not used
D1	0.188	0.180	0.131
D2	0.189	0.179	0.131
D3	0.188	0.180	0.130
Average (D_N)	0.188	0.180	0.131
	Metal Pyrex Quartz	Metal Pyrex Quartz	Metal Pyrex Quartz

	Nozzle #	Nozzle #	Nozzle #
Point #	Location #1		
D1	0.182		
D2	0.182		
D3	0.182		
Average (D_N)	0.182		
	Metal Pyrex Quartz	Metal Pyrex Quartz	Metal Pyrex Quartz

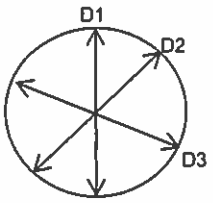

$$Dn = \frac{D_1 + D_2 + D_3}{3}$$

The difference between the highest and lowest numbers shall not exceed 0.004 in.

65 PARKER STREET / UNIT 3 / NEWBURYPORT, MASSACHUETTS 01950
tel 978.499.9300 / fax 978.499.9303 / www.eastmount.com

TYPE S PITOT TUBE INSPECTION DATA SHEET

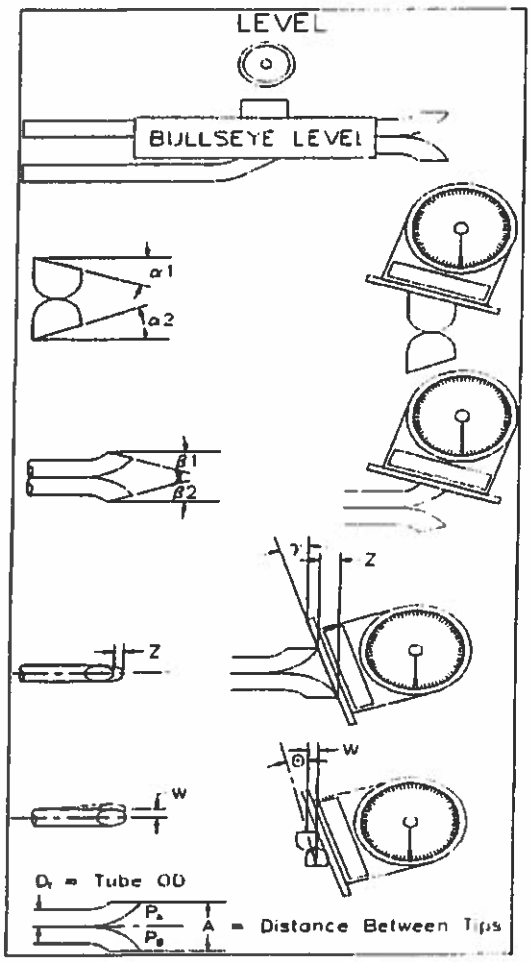

Parameter	Value	Allowable Range
Assembly Level?	Yes	
Holes Damaged?	No	
Obstructed?	No	
α1	1.5	-10° < α1 < +10°
α2	.5	-10° < α2 < +10°
β1	.4	-5° < β1 < +5°
β2	.2	-5° < β2 < +5°
γ	1.3	
θ	.7	
A	.979	for 1/4" OD, 0.526 to 0.750 for 3/8" OD, 0.788 to 1.125
Z = A sin γ	.022	Z = ≤ 0.125"
W = A sin θ	.011	W = ≤ 0.031"
P_A	.485	for 1/4" OD, 0.263 to 0.375 for 3/8" OD, 0.394 to 0.563
P_B	.485	for 1/4" OD, 0.263 to 0.375 for 3/8" OD, 0.394 to 0.563
P_A - P_B	.000	-0.063 to 0.063"
D_T	.375	0.188 to 0.375"
Thermocouple Cal.	80.5	Reference temp.
Thermocouple Cal.	80.4	Probe Thermocouple

Certification

I certify that the Type S pitot tube/probe ID **ESP 27 B** meets or exceeds all specifications, criteria and/or applicable design features and is hereby assigned a pitot tube calibration factor C_p of 0.84. NIST traceable digital thermometer serial number **140134857** was used as reference temperature.

Certified and Calibrated By: Bill Messick

Montrose Identification No. 1021878

Date Certified: 10/08/15

Last Calibration

Calibration Certificate No. 1750.01

Calibration complies with ISO/IEC 17025, ANSI/NCSL Z540-1, and 9001

Cert. No.: 4371-5741727

Traceable® Certificate of Calibration for Lollipop Thermometer

Instrument Identification:

Model: 4371 S/N: 140134857 Manufacturer: Control Company

Standards/Equipment:

Description	Serial Number	Due Date	NIST Traceable Reference
Temperature Calibration Bath TC-256	B01375		
Thermistor Module	A27129	10/25/14	1000346002
Temperature Probe	5267	10/19/15	15-CD5J7-1-1
Temperature Calibration Bath TC-218	A73332		
Thermistor Module	A27129	10/25/14	1000346002
Temperature Probe	5202	11/30/14	15-B15PW-1-1

Certificate Information:

Technician: 68 Procedure: CAL-03 Cal Date: 2/24/14 **Cal Due: 2/24/16**

Test Conditions: 23.5°C 47.0 %RH 1018 mBar

Calibration Data: (New Instrument)

Unit(s)	Nominal	As Found	In Tol	Nominal	As Left	In Tol	Min	Max	±U	TUR
°C		N.A.		0.000	0.0	Y	-1.0	1.0	0.10	>4:1
°C		N.A.		100.000	99.4	Y	99.0	101.0	0.059	>4:1

This Instrument was calibrated using Instruments Traceable to National Institute of Standards and Technology.

A Test Uncertainty Ratio of at least 4:1 is maintained unless otherwise stated and is calculated using the expanded measurement uncertainty. Uncertainty evaluation includes the instrument under test and is calculated in accordance with the ISO "Guide to the Expression of Uncertainty in Measurement" (GUM). The uncertainty represents an expanded uncertainty using a coverage factor k=2 to approximate a 95% confidence level. In tolerance conditions are based on test results falling within specified limits with no reduction by the uncertainty of the measurement. The results contained herein relate only to the item calibrated. This certificate shall not be reproduced except in full, without written approval of Control Company.

Nominal=Standard's Reading; As Left=Instrument's Reading; In Tol=In Tolerance; Min/Max=Acceptance Range; ±U=Expanded Measurement Uncertainty; TUR=Test Uncertainty Ratio; Accuracy=±(Max-Min)/2. Min = As Left Nominal(Rounded) - Tolerance; Max = As Left Nominal(Rounded) + Tolerance, Date=MM/DD/YY

Nicol Rodriguez, Quality Manager

Aaron Judice, Technical Manager

Maintaining Accuracy:

In our opinion once calibrated your Lollipop Thermometer should maintain its accuracy. There is no exact way to determine how long calibration will be maintained. Lollipop Thermometers change little, if any at all, but can be affected by aging, temperature, shock, and contamination.

Recalibration:

For factory calibration and re-certification traceable to National Institute of Standards and Technology contact Control Company.

CONTROL COMPANY 4455 Rex Road Friendswood, TX 77546 USA
Phone 281 482-1714 Fax 281 482-9448 service@control3.com www.control3.com

Control Company is an ISO 17025:2005 Calibration Laboratory Accredited by (A2LA) American Association for Laboratory Accreditation, Certificate No. 1750.01.
Control Company is ISO 9001:2008 Quality Certified by (DNV) Det Norske Veritas, Certificate No. CERT-01805-2006-AQ-HOU-RvA.
International Laboratory Accreditation Cooperation (ILAC) - Multilateral Recognition Arrangement (MRA).

Traceable® is a registered trademark of Control Company © 2009 Control Company

EASTMOUNT ENVIRONMENTAL SERVICES
Air Quality Specialists

Pitot Calibration Sheet

Technician:	Mike Bruni	Pitot ID:	S-4-1
Date Calibrated:	1/7/2015	Probe ID:	S-4-1
Next Due Cal Date:	1/7/2016		

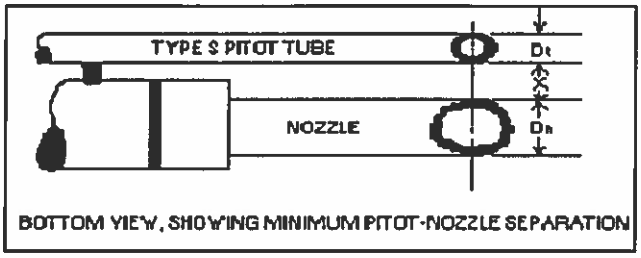

0.375	Dt (between 0.188 and 0.375 in.)
N/A	X (greater than or equal to 3/4 in.)
N/A	Dn (must use 1/2 in. nozzle)

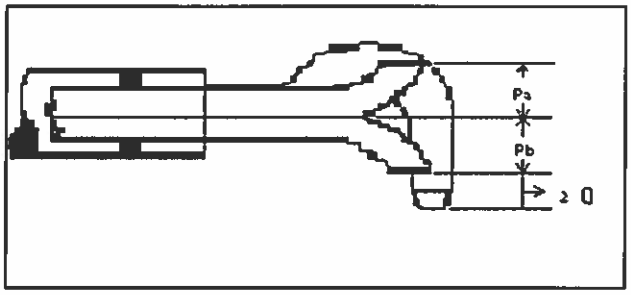

0.490	Pa	Pa must = Pb
0.490	Pb	
1.307	P(a) (Must be between 1.05 and 1.5 Dt)	
1.307	P(b) (Must be between 1.05 and 1.5 Dt)	

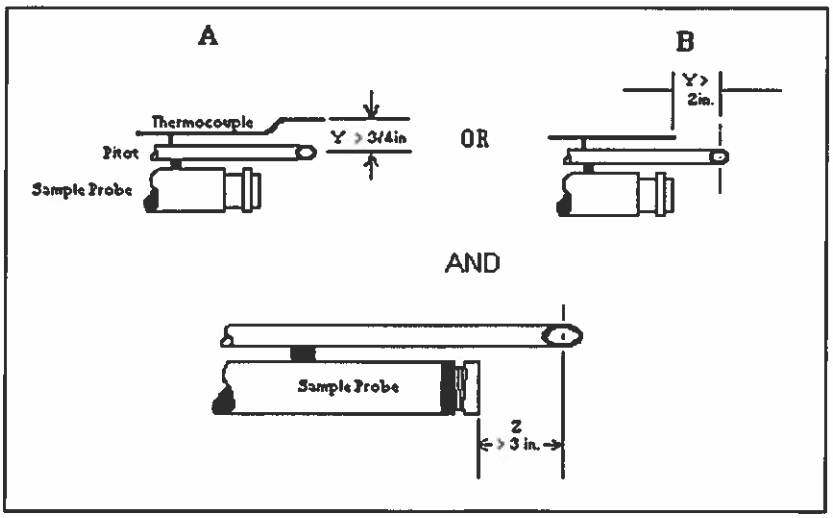

A
N/A Y (must be > 3/4in.)

or

B
N/A Y (must be > 2in.)

N/A Z (must be > 3in.)

* All calibrations are in accordance with CFR Pt.60, App.A, Meth.2, sect4.1.2 (Type S Pitot Calibration)

2 NEW PASTURE ROAD UNIT 5 NEWBURYPORT, MA 01950
TEL: 978.499.9300 FAX: 978.499.9303 E-MAIL: INFO@EASTMOUNT.COM WWW.EASTMOUNT.COM

EASTMOUNT ENVIRONMENTAL SERVICES
Air Quality Specialists

Pitot Calibration Sheet

Technician:	Mike Bruni	Pitot ID:	S-4-1
Date Calibrated:	1/7/2015	Probe ID:	S-4-1
Next Due Cal Date:	1/7/2016		

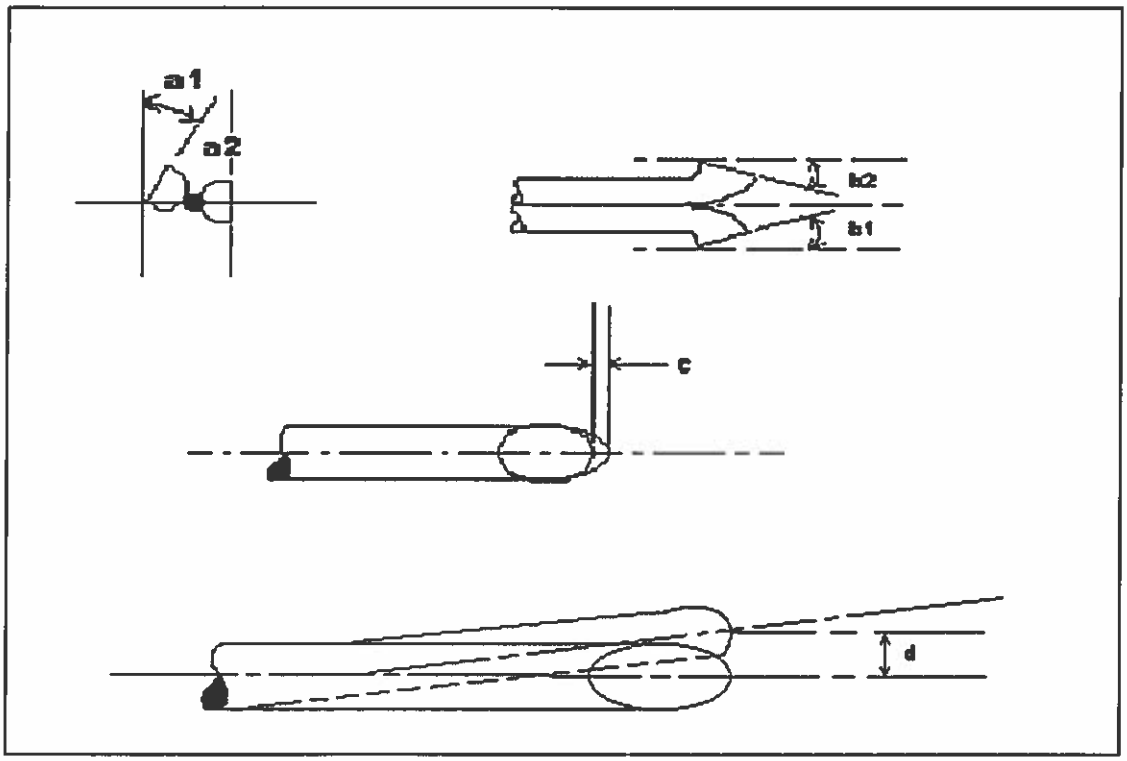

Degrees		Inches		
4	a1			a1 and a2 must be < 10 degrees
2	a2			
1	b1			b1 and b2 must be < 5 degrees
2	b2			
2	α	0.034	c	c must be < 0.125 in. (1/8in.) where: c = (Pa+Pb) x sin α
1	Θ	0.01710	d	d must be < 0.03125 in (1/32in) where: d = (Pa + Pb) x sin Θ

2 NEW PASTURE ROAD UNIT 5 NEWBURYPORT, MA 01950
TEL: 978.499.9300 FAX: 978.499.9303 E-MAIL: INFO@EASTMOUNT.COM WWW.EASTMOUNT.COM

EASTMOUNT ENVIRONMENTAL SERVICES
Air Quality Specialists

Thermocouple Calibration

TC ID:	TC S-4-1	**Cal Date:**	1/5/2015	**Reference Type:**	Mercury in Glass
Tech.:	M. Bruni	**Exp Date:**	1/4/2016	**Reference Cert. No.:**	ASTM-3

Ice Bath (0°C)

	Ref Temp (T_R)	TC Temp (T_T)	% Error
Run 1	32	33	-0.20%
Run 2	32	33	-0.20%
Run 3	32	33	-0.20%
		Pass/Fail	**PASS**

Boiling Water (100°C)

	Ref Temp (T_R)	TC Temp (T_T)	% Error
Run 1	212	212	0.00%
Run 2	212	211	0.15%
Run 3	212	212	0.00%
		Pass/Fail	**PASS**

Hot Oil (~230°C)

	Ref Temp (T_R)	TC Temp (T_T)	% Error
Run 1	550	549	0.10%
Run 2	550	548	0.20%
Run 3	550	548	0.20%
		Pass/Fail	**PASS**

Test Pass/Fail **PASS**

Calibration tolerance for each run is 1.5%.
% Error = $(((T_R + 460) - (T_T + 460)) / (T_R + 460)) \cdot 100$
Calibration conducted in accordance with EPA Method 2, Section 10.3.

EASTMOUNT ENVIRONMENTAL SERVICES
Air Quality Specialists

EE - 6 Thermocouple Calibration

TC ID:	DG-In	**Cal Date:**	1/7/2015	**Reference Type:**	Mercury in Glass
Tech.:	M. Bruni	**Exp Date:**	1/7/2016	**Reference Cert. No.:**	ASTM-3

Ice Bath (~32°F)

	Ref Temp (T_R)	TC Temp (T_T)	% Error
Run 1	33	33	0.00%
Run 2	33	32	0.20%
Run 3	33	33	0.00%
		Pass/Fail	**PASS**

Ambient (~70°F)

	Ref Temp (T_R)	TC Temp (T_T)	% Error
Run 1	68	68	0.00%
Run 2	68	68	0.00%
Run 3	68	68	0.00%
		Pass/Fail	**PASS**

Boiling Water (~212°F)

	Ref Temp (T_R)	TC Temp (T_T)	% Error
Run 1	212	212	0.00%
Run 2	212	212	0.00%
Run 3	212	211	0.15%
		Pass/Fail	**PASS**

Test Pass/Fail **PASS**

Calibration tolerance for each run is 1.5%.
% Error = $(((T_R + 460) - (T_T + 460)) / (T_R + 460)) \cdot 100$
Calibration conducted in accordance with EPA Method 2, Section 10.3.

EASTMOUNT ENVIRONMENTAL SERVICES
Air Quality Specialists

EE - 6 Thermocouple Calibration

TC ID:	DG-Out	**Cal Date:**	1/7/2015	**Reference Type:**	Mercury in Glass
Tech.:	M. Bruni	**Exp Date:**	1/7/2016	**Reference Cert. No.:**	ASTM-3

Ice Bath (~32°F)

	Ref Temp (T_R)	TC Temp (T_T)	% Error
Run 1	33	33	0.00%
Run 2	33	32	0.20%
Run 3	33	32	0.20%
		Pass/Fail	PASS

Ambient (~70°F)

	Ref Temp (T_R)	TC Temp (T_T)	% Error
Run 1	68	67	0.19%
Run 2	68	68	0.00%
Run 3	68	67	0.19%
		Pass/Fail	PASS

Boiling Water (~212°F)

	Ref Temp (T_R)	TC Temp (T_T)	% Error
Run 1	212	211	0.15%
Run 2	212	211	0.15%
Run 3	212	212	0.00%
		Pass/Fail	PASS

Test Pass/Fail PASS

Calibration tolerance for each run is 1.5%.

% Error = $(((T_R + 460) - (T_T + 460)) / (T_R + 460)) \cdot 100$

Calibration conducted in accordance with EPA Method 2, Section 10.3.

EASTMOUNT ENVIRONMENTAL SERVICES
Air Quality Specialists

EE - 3 Thermocouple Calibration

TC ID:	DG-In	**Cal Date:**	1/7/2015	**Reference Type:**	Mercury in Glass
Tech.:	M. Bruni	**Exp Date:**	1/7/2016	**Reference Cert. No.:**	ASTM-3

Ice Bath (~32°F)

	Ref Temp (T_R)	TC Temp (T_T)	% Error
Run 1	32	33	-0.20%
Run 2	32	33	-0.20%
Run 3	32	32	0.00%
		Pass/Fail	**PASS**

Ambient (~70°F)

	Ref Temp (T_R)	TC Temp (T_T)	% Error
Run 1	68	67	0.19%
Run 2	68	67	0.19%
Run 3	68	68	0.00%
		Pass/Fail	**PASS**

Boiling Water (~212°F)

	Ref Temp (T_R)	TC Temp (T_T)	% Error
Run 1	212	211	0.15%
Run 2	212	212	0.00%
Run 3	212	211	0.15%
		Pass/Fail	**PASS**

Test Pass/Fail **PASS**

Calibration tolerance for each run is 1.5%.
% Error = $(((T_R + 460) - (T_T + 460)) / (T_R + 460)) \cdot 100$
Calibration conducted in accordance with EPA Method 2, Section 10.3.

EASTMOUNT ENVIRONMENTAL SERVICES
Air Quality Specialists

EE - 3 Thermocouple Calibration

TC ID:	DG-Out	**Cal Date:**	1/7/2015	**Reference Type:**	Mercury in Glass
Tech.:	M. Bruni	**Exp Date:**	1/7/2016	**Reference Cert. No.:**	ASTM-3

Ice Bath (~32°F)

	Ref Temp (T_R)	TC Temp (T_T)	% Error
Run 1	33	32	0.20%
Run 2	33	33	0.00%
Run 3	33	33	0.00%
		Pass/Fail	**PASS**

Ambient (~70°F)

	Ref Temp (T_R)	TC Temp (T_T)	% Error
Run 1	68	68	0.00%
Run 2	68	68	0.00%
Run 3	68	68	0.00%
		Pass/Fail	**PASS**

Boiling Water (~212°F)

	Ref Temp (T_R)	TC Temp (T_T)	% Error
Run 1	212	212	0.00%
Run 2	212	212	0.00%
Run 3	212	212	0.00%
		Pass/Fail	**PASS**

Test Pass/Fail **PASS**

Calibration tolerance for each run is 1.5%.

% Error = $(((T_R + 460) - (T_T + 460)) / (T_R + 460)) \cdot 100$

Calibration conducted in accordance with EPA Method 2, Section 10.3.

EASTMOUNT ENVIRONMENTAL SERVICES
Air Quality Specialists

EE - 6 Thermocouple Calibration

TC ID:	DG-In	**Cal Date:**	1/7/2015	**Reference Type:**	Mercury in Glass
Tech.:	M. Bruni	**Exp Date:**	1/7/2016	**Reference Cert. No.:**	ASTM-3

Ice Bath (~32°F)

	Ref Temp (T_R)	TC Temp (T_T)	% Error
Run 1	33	33	0.00%
Run 2	33	32	0.20%
Run 3	33	33	0.00%
		Pass/Fail	**PASS**

Ambient (~70°F)

	Ref Temp (T_R)	TC Temp (T_T)	% Error
Run 1	68	68	0.00%
Run 2	68	68	0.00%
Run 3	68	68	0.00%
		Pass/Fail	**PASS**

Boiling Water (~212°F)

	Ref Temp (T_R)	TC Temp (T_T)	% Error
Run 1	212	212	0.00%
Run 2	212	212	0.00%
Run 3	212	211	0.15%
		Pass/Fail	**PASS**

Test Pass/Fail **PASS**

Calibration tolerance for each run is 1.5%.
% Error = $(((T_R + 460) - (T_T + 460)) / (T_R + 460)) \cdot 100$
Calibration conducted in accordance with EPA Method 2, Section 10.3.

EASTMOUNT ENVIRONMENTAL SERVICES
Air Quality Specialists

EE - 6 Thermocouple Calibration

TC ID:	DG-Out	**Cal Date:**	1/7/2015	**Reference Type:**	Mercury in Glass
Tech.:	M. Bruni	**Exp Date:**	1/7/2016	**Reference Cert. No.:**	ASTM-3

Ice Bath (~32°F)

	Ref Temp (T_R)	TC Temp (T_T)	% Error
Run 1	33	33	0.00%
Run 2	33	32	0.20%
Run 3	33	32	0.20%
		Pass/Fail	PASS

Ambient (~70°F)

	Ref Temp (T_R)	TC Temp (T_T)	% Error
Run 1	68	67	0.19%
Run 2	68	68	0.00%
Run 3	68	67	0.19%
		Pass/Fail	PASS

Boiling Water (~212°F)

	Ref Temp (T_R)	TC Temp (T_T)	% Error
Run 1	212	211	0.15%
Run 2	212	211	0.15%
Run 3	212	212	0.00%
		Pass/Fail	PASS

Test Pass/Fail **PASS**

Calibration tolerance for each run is 1.5%.

% Error = $(((T_R + 460) - (T_T + 460)) / (T_R + 460)) \cdot 100$

Calibration conducted in accordance with EPA Method 2, Section 10.3.

EASTMOUNT ENVIRONMENTAL SERVICES
Air Quality Specialists

Thermocouple Calibration

TC ID:	TC S-4-1	**Cal Date:**	1/5/2015	**Reference Type:**	Mercury in Glass
Tech.:	M. Bruni	**Exp Date:**	1/4/2016	**Reference Cert. No.:**	ASTM-3

Ice Bath (0°C)

	Ref Temp (T_R)	TC Temp (T_T)	% Error
Run 1	32	33	-0.20%
Run 2	32	33	-0.20%
Run 3	32	33	-0.20%
		Pass/Fail	**PASS**

Boiling Water (100°C)

	Ref Temp (T_R)	TC Temp (T_T)	% Error
Run 1	212	212	0.00%
Run 2	212	211	0.15%
Run 3	212	212	0.00%
		Pass/Fail	**PASS**

Hot Oil (~230°C)

	Ref Temp (T_R)	TC Temp (T_T)	% Error
Run 1	550	549	0.10%
Run 2	550	548	0.20%
Run 3	550	548	0.20%
		Pass/Fail	**PASS**

Test Pass/Fail **PASS**

Calibration tolerance for each run is 1.5%.
% Error = $(((T_R + 460) - (T_T + 460)) / (T_R + 460)) \cdot 100$
Calibration conducted in accordance with EPA Method 2, Section 10.3.

EASTMOUNT ENVIRONMENTAL SERVICES
Air Quality Specialists

4th Impinger Adapter Thermocouple Calibration

Adapter TC ID: 3066 **Cal Date:** 1/7/2015 **Technician:** M. BRUNI
Reference Type: Mercury in Glass **Exp Date:** 1/7/2016 **Signature:**

Ice Bath (~32 °F)

	Ref Temp (T_R)	TC Temp (T_T)	% Error
Run 1	32	33	-0.33%
Run 2	32	32	0.00%
Run 3	32	32	0.00%
		Pass/Fail	PASS

Ambient (~70 °F)

	Ref Temp (T_R)	TC Temp (T_T)	% Error
Run 1	66	68	-0.59%
Run 2	67	66	0.29%
Run 3	67	66	0.29%
		Pass/Fail	PASS

Boiling Water (~212 °F)

	Ref Temp (T_R)	TC Temp (T_T)	% Error
Run 1	211	210	0.21%
Run 2	211	211	0.00%
Run 3	212	211	0.21%
		Pass/Fail	PASS

Test Pass/Fail **PASS**

Calibration tolerance for each run is 1.5%.
% Error = $(((T_R + 273) - (T_T + 273)) / (T_R + 273)) \cdot 100$
Calibration conducted in accordance with EPA Method 2, Section 10.3.

EASTMOUNT ENVIRONMENTAL SERVICES
Air Quality Specialists

4th Impinger Adapter Thermocouple Calibration

Adapter TC ID:	3064	**Cal Date:**	1/7/2015	**Technician:**	M. BRUNI
Reference Type:	Mercury in Glass	**Exp Date:**	1/7/2016	**Signature:**	

Ice Bath (~32 °F)

	Ref Temp (T_R)	TC Temp (T_T)	% Error
Run 1	32	33	-0.33%
Run 2	32	33	-0.33%
Run 3	32	33	-0.33%
		Pass/Fail	**PASS**

Ambient (~70 °F)

	Ref Temp (T_R)	TC Temp (T_T)	% Error
Run 1	67	66	0.29%
Run 2	66	66	0.00%
Run 3	66	65	0.29%
		Pass/Fail	**PASS**

Boiling Water (~212 °F)

	Ref Temp (T_R)	TC Temp (T_T)	% Error
Run 1	212	210	0.41%
Run 2	212	211	0.21%
Run 3	212	211	0.21%
		Pass/Fail	**PASS**

Test Pass/Fail **PASS**

Calibration tolerance for each run is 1.5%.
% Error = $(((T_R + 273) - (T_T + 273)) / (T_R + 273)) \cdot 100$
Calibration conducted in accordance with EPA Method 2, Section 10.3.

EASTMOUNT ENVIRONMENTAL SERVICES
Air Quality Specialists

4th Impinger Adapter Thermocouple Calibration

Adapter TC ID:	3061	**Cal Date:**	1/7/2015	**Technician:**	Mike Bruni
Reference Type:	Mercury in Glass	**Exp Date:**	1/7/2016	**Signature:**	

Ice Bath (~32 °F)

	Ref Temp (T_R)	TC Temp (T_T)	% Error
Run 1	34	34	0.00%
Run 2	33	33	0.00%
Run 3	33	32	0.20%
		Pass/Fail	**PASS**

Ambient (~70 °F)

	Ref Temp (T_R)	TC Temp (T_T)	% Error
Run 1	66	66	0.00%
Run 2	66	65	0.19%
Run 3	66	66	0.00%
		Pass/Fail	**PASS**

Boiling Water (~212 °F)

	Ref Temp (T_R)	TC Temp (T_T)	% Error
Run 1	212	212	0.00%
Run 2	212	212	0.00%
Run 3	212	212	0.00%
		Pass/Fail	**PASS**

Test Pass/Fail **PASS**

Calibration tolerance for each run is 1.5%.
% Error = $(((T_R + 460) - (T_T + 460)) / (T_R + 460)) \cdot 100$
Calibration conducted in accordance with EPA Method 2, Section 10.3.

2 NEW PASTURE ROAD / UNIT 5 / NEWBURYPORT, MASSACHUETTS 01950
tel 978.499.9300 / fax 978.499.9303 / www.eastmount.com

EASTMOUNT ENVIRONMENTAL SERVICES
Air Quality Specialists

4th Impinger Adapter Thermocouple Calibration

Adapter TC ID: 3060 **Cal Date:** 1/7/2015 **Technician:** M. BRUNI
Reference Type: Mercury in Glass **Exp Date:** 1/7/2016 **Signature:**

Ice Bath (~32 °F)

	Ref Temp (T_R)	TC Temp (T_T)	% Error
Run 1	32	33	-0.20%
Run 2	32	33	-0.20%
Run 3	32	32	0.00%
		Pass/Fail	PASS

Ambient (~70 °F)

	Ref Temp (T_R)	TC Temp (T_T)	% Error
Run 1	67	67	0.00%
Run 2	67	67	0.00%
Run 3	68	67	0.19%
		Pass/Fail	PASS

Boiling Water (~212 °F)

	Ref Temp (T_R)	TC Temp (T_T)	% Error
Run 1	212	211	0.15%
Run 2	212	212	0.00%
Run 3	212	212	0.00%
		Pass/Fail	PASS

Test Pass/Fail **PASS**

Calibration tolerance for each run is 1.5%.
% Error = $(((T_R + 460) - (T_T + 460)) / (T_R + 460)) \cdot 100$
Calibration conducted in accordance with EPA Method 2, Section 10.3.

EASTMOUNT ENVIRONMENTAL SERVICES
Air Quality Specialists

4th Impinger Adapter Thermocouple Calibration

Adapter TC ID: 1383 **Cal Date:** 1/7/2015 **Technician:** M. BRUNI
Reference Type: Mercury in Glass **Exp Date:** 1/6/2016 **Signature:**

Ice Bath (~32 °F)

	Ref Temp (T_R)	TC Temp (T_T)	% Error
Run 1	32	33	-0.33%
Run 2	32	33	-0.33%
Run 3	32	33	-0.33%
		Pass/Fail	PASS

Ambient (~70 °F)

	Ref Temp (T_R)	TC Temp (T_T)	% Error
Run 1	66	66	0.00%
Run 2	66	66	0.00%
Run 3	66	66	0.00%
		Pass/Fail	PASS

Boiling Water (~212 °F)

	Ref Temp (T_R)	TC Temp (T_T)	% Error
Run 1	212	213	-0.21%
Run 2	212	212	0.00%
Run 3	212	213	-0.21%
		Pass/Fail	PASS

Test Pass/Fail **PASS**

Calibration tolerance for each run is 1.5%.
% Error = $(((T_R + 273) - (T_T + 273)) / (T_R + 273)) \cdot 100$
Calibration conducted in accordance with EPA Method 2, Section 10.3.

2 NEW PASTURE ROAD / UNIT 5 / NEWBURYPORT, MASSACHUETTS 01950
tel 978.499.9300 / fax 978.499.9303 / www.eastmount.com

EASTMOUNT ENVIRONMENTAL SERVICES
Air Quality Specialists

4th Impinger Adapter Thermocouple Calibration

Adapter TC ID:	8888	**Cal Date:**	1/7/2015	**Technician:**	M.BRUNI
Reference Type:	Mercury in Glass	**Exp Date:**	1/6/2016	**Signature:**	

Ice Bath (~32 °F)

	Ref Temp (T_R)	TC Temp (T_T)	% Error
Run 1	34	33	0.33%
Run 2	34	33	0.33%
Run 3	34	33	0.33%
		Pass/Fail	**PASS**

Ambient (~70 °F)

	Ref Temp (T_R)	TC Temp (T_T)	% Error
Run 1	64	64	0.00%
Run 2	64	64	0.00%
Run 3	64	64	0.00%
		Pass/Fail	**PASS**

Boiling Water (~212 °F)

	Ref Temp (T_R)	TC Temp (T_T)	% Error
Run 1	211	210	0.21%
Run 2	211	210	0.21%
Run 3	211	210	0.21%
		Pass/Fail	**PASS**

Test Pass/Fail **PASS**

Calibration tolerance for each run is 1.5%.
% Error = $(((T_R + 273) - (T_T + 273)) / (T_R + 273)) \cdot 100$
Calibration conducted in accordance with EPA Method 2, Section 10.3.

EASTMOUNT ENVIRONMENTAL SERVICES
Air Quality Specialists

EPA Method 1 / Method 2 Field Data Sheet

Client:	WTE
Site Location:	Greenfield, MA
Source:	Scrubber/Cyclone 1
Test Location:	
Duct Diameter:	
Test Number:	
Test Time:	
Test Date:	11/18/15
Testers:	JC, AS
Pitot Number:	S-4-1
Pitot Coefficient:	
Ambient Temperature:	
Wet Bulb Temp:	
Barometric Pressure:	
Duct Static Pressure:	-1.80
	Pre / Post
Leak Checks:	✓✓ / ✓✓

Pump Calibration	Initial	Final
1		
2		
3		

Impinger Volume		
1		
2		
3		

Port Number	Traverse Point	Velocity Pressure	Stack Temp.	Cyclonic Angle
A 1	1	2.80	81	-2
2	2	3.20	82	+5
3	3	3.10	82	+7
4	4	2.20	82	+2
B 1	1	2.90	83	-1
2	2	2.90	83	0
3	3	3.00	83	+5
4	4	2.05	82	+3
C 1	1	2.30	82	-2
2	2	2.50	83	+2
3	3	2.70	83	+7
4	4	2.10	82	+6
D 1	1	2.10	82	-2
2	2	2.35	83	0
3	3	2.40	83	+6
4	4	2.10	83	+8

2 NEW PASTURE ROAD / UNIT 5 / NEWBURYPORT MASSACHUSETTS 01950
tel 978.499 9300 / fax 978.499 9303 / www.eastmount.com

EASTMOUNT ENVIRONMENTAL SERVICES
Air Quality Specialists

EPA Method 1 / Method 2 Field Data Sheet

Client:	WTE
Site Location:	
Source:	Unit 2
Test Location:	Outlet
Duct Diameter:	
Test Number:	Pre
Test Time:	1338 - 155
Test Date:	11/17/15
Testers:	MB, JS
Pitot Number:	P-3-8
Pitot Coefficient:	0.84
Ambient Temperature:	
Wet Bulb Temp:	
Barometric Pressure:	
Duct Static Pressure:	
	Pre / Post
Leak Checks:	✓✓ / ✓✓

Pump Calibration	Initial	Final
1		
2		
3		

Impinger Volume		
1		
2		
3		

Port Number	Traverse Point	Velocity Pressure	Stack Temp.	Cyclonic Angle
A	1	2.40	57	0
	2	2.30	57	+5
	3	2.00	57	+6
	4	1.70	57	+4
	5	1.35	57	+4
B	1	2.30	57	+5
	2	2.20	58	+10
	3	2.00	57	+6
	4	1.50	57	+5
	5	1.00	57	+6
C	1	2.00	59	+6
	2	1.90	57	+5
	3	1.50	57	+7
	4	1.10	56	+7
	5	0.85	56	+12
D	1	2.10	58	+5
	2	1.80	58	+1
	3	1.50	58	+8
	4	1.20	58	+10
	5	0.93	58	+6

2 NEW PASTURE ROAD / UNIT 5 / NEWBURYPORT, MASSACHUSETTS 01950
tel 978.499 9300 / fax 978.499 9303 / www.eastmount.com

An Eastmount Company

EASTMOUNT ENVIRONMENTAL SERVICES
Air Quality Specialists

EPA Method 1 / Method 2 Field Data Sheet

Client:	WTE
Site Location:	
Source:	Unit 3
Test Location:	Outlet
Duct Diameter:	
Test Number:	Pre
Test Time:	1518 - 1537
Test Date:	11/17/15
Testers:	MB / JS
Pitot Number:	B-3-8
Pitot Coefficient:	0.84
Ambient Temperature:	
Wet Bulb Temp:	
Barometric Pressure:	
Duct Static Pressure:	
	Pre / Post
Leak Checks:	✓✓ / ✓✓

Pump Calibration	Initial	Final
1		
2		
3		

Impinger Volume		
1		
2		
3		

Port Number	Traverse Point	Velocity Pressure	Stack Temp.	Cyclonic Angle
A	1	2.7	58	+4
	2	2.5	58	+6
	3	2.0	58	+10
	4	1.95	58	+7
	5	1.50	58	+1
B	1	2.70	58	0
	2	2.60	58	+9
	3	2.20	58	+7
	4	1.80	58	+6
	5	1.10	58	+5
C	1	2.20	58	+2
	2	2.00	59	+7
	3	1.80	59	+1
	4	1.50	59	+1
	5	1.20	57	+10
D	1	2.00	58	+1
	2	1.70	58	+3
	3	1.10	58	+12
	4	0.90	57	+8
	5	0.75	57	+1

2 NEW PASTURE ROAD / UNIT 6 / NEWBURYPORT, MASSACHUSETTS 01950
tel 978.499.9300 / fax 978.499.9303 / www.eastmount.com