Instruction

MI 018-871

September 1995

740 Series
Digital Circular Chart Recorder and Recording Controller

Installation, Operation, Configuration, and Maintenance

Style AA

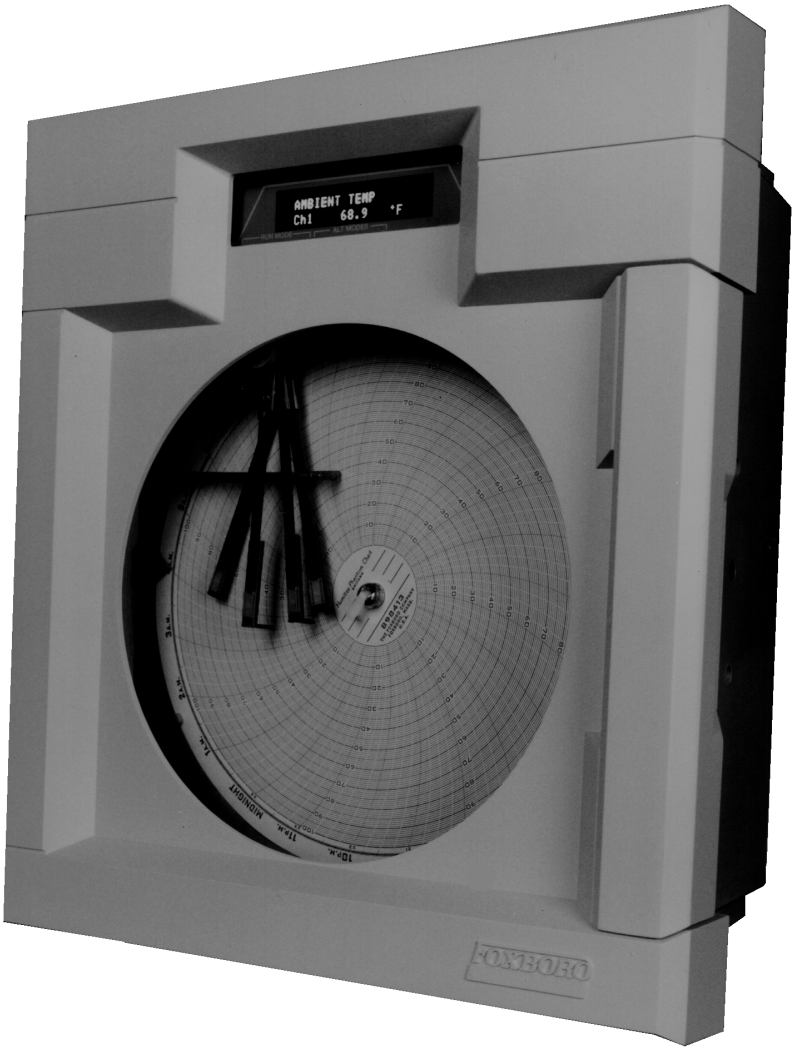

FOXBORO®

A SIEBE COMPANY

Foxboro and EXACT are registered trademarks of The Foxboro Company.

Copyright 1995 by The Foxboro Company
All rights reserved

Contents

Figures ..... **vii**

Tables ..... **ix**

Preface ..... **xi**

Read Me First xi

Introduction **1**

General 1

Instrument Functions 2

Model Code, Recorder 3

Model Code, Controller 4

Standard Specifications 6

Installation **9**

Unpacking the 740 9

Door and Platen Operation 9

Mounting 9

Pen Installation and Replacement 10

Chart Installation and Replacement 11

General Wiring Practices 11

Jumpers and Wiring 12
- Jumpers 12
- Wiring - Supply Connection and Voltage Selection 12
- Wiring - Signal Inputs - General 14
- Wiring - Thermocouple Inputs 17
- Wiring - Resistance Temperature Detector (RTD) Inputs 17

Wiring - Direct Voltage Inputs (Up to 5 V dc) 17
- Wiring - Direct Voltage Inputs (Above 5 V dc) 18
- Wiring - Current Inputs (Using 740 Powered Transmitter) 19
- Wiring - Current Input 20
- Wiring - Current Inputs (Using Self-Powered Transmitter) 21
- Wiring - Relay Outputs 21
- Wiring - Retransmission Output and Contact Input 21

Keypads and Display **23**
Menu and Select Keypad 23
Controller Keypad 24
Digital Displays 24
Configuration Display 25
Run Display 25
Ramp Generator Display 25
Controller Display 26

Menu Structure Diagram **27**

Run Mode **39**

Operator Mode **41**
Recording Functions 41
Controller Functions Without EXACT 47
Ramp Generator Functions 54

Configure Mode **61**
Overview 61
Configuration Procedures 61
Configuration Worksheets 63
Channel (1 to 4) Configuration Procedure 74
Channel (5 and 6) Configuration Procedure 79
Range, Input, and Chart Span Notes Relating to Channel Configuration 82
Range 82
Input 82
Chart 83
Instrument Configuration (Common to All Channels) Procedure 85
Alarm Configuration Description 92
Alarm Quantity 92
Alarm Indication 92
Alarm Types 93
Alarm Symbols 93
Alarm Configuration Procedure 94
Relay Output Description 96
Relay Output Configuration Procedure 97
Totalizer Configuration Description 99

Totalizer Configuration Procedure 100
Timer Configuration Description 107
Timer Configuration Procedure 107
Calculated Variable Configuration Menu 109
General Description of Calculated Variables 109
Basic Calculations - Calculated Variables 109
Specialized Functions - Calculated Variables 110
Individual CV Calculation Descriptions 111
Calculated Variable Examples 113
Communications Description 116
Communications Procedure 116
Retransmission Configuration Description 116
Retransmission Configuration Procedure 116
Instrument Alarms 118
Controller Configuration Description (740C Only) 121
Controller Configuration Procedure (740C Only) 123
Default Control Loop Setups 128
Ramp Generator Description 147
General 147
Configuration 147
Ramp Generator Procedures 152
The Main Ramp Generator Menu 152
The Recipe Menu 153
The Segment Type Menu 154
EXACT Tuning 157
Introduction 157
Principle of Operation 157
Terminology 157
EXACT Configuration Data 157
Self-Tune Function 161
Pretune Function 163
Determining Values for EXACT Parameters 164
EXACT Tuning Procedures 169
Calibration Menu Configuration 173

Action Equations and Internal Triggers 179

Maintenance 183

Index **185**

Figures

1 740 Series Digital Circular Chart Recorder or Recording Controller 1
2 Door Latch 9
3 Dimensions 10
4 Fiber Tip Pen Installation 11
5 Power Supply Wiring 14
6 Jumper Positions and Locations 15
7 Jumper Positions and Locations (Continued) 16
8 Thermocouple Wiring 17
9 Resistance Temperature Detector (RTD) Wiring 17
10 mV/Volt Wiring 17
11 Voltage Divider Mini Board Wiring 18
12 Current Input from Transmitter Powered by 740 Recorder 19
13 Current Input (Self-Powered Transmitter with Instrument Power Supply NOT Being Used) 20
14 Current Input (with Self-Powered Transmitter) 21
15 Keypad Description 23
16 Character Library 24
17 Controller Keypad 24
18 CONFIGURE Display 25
19 RUN Display 25
20 Ramp Generator Display 26
21 CONTROLLER Display (With 740C only) 26
22 Model 740 Menu Structure Diagram - Sheet 1 28
23 Model 740 Menu Structure Diagram - Sheet 2 29
24 Model 740 Menu Structure Diagram - Sheet 3 30
25 Model 740 Menu Structure Diagram - Sheet 4 31
26 Model 740 Menu Structure Diagram - Sheet 5 32
27 Model 740 Menu Structure Diagram - Sheet 6 33
28 Model 740 Menu Structure Diagram - Sheet 7 34
29 Model 740 Menu Structure Diagram - Sheet 8 35
30 Model 740 Menu Structure Diagram - Sheet 9 36
31 Model 740 Menu Structure Diagram - Sheet 10 37
32 Model 740 Menu Structure Diagram - Sheet 11 38
33 Time/Temperature Ramp 56
34 Ramp Generator Display 58
35 Configuration Procedures, Main Menu Structure 72
36 Configuration Procedures, Main Menu Structure (Continued) 73
37 Duplex Operation 122
38 Time/Temperature Ramp 147
39 Ramp Generator Menu Sequence 151
40 Ramp across Two Segments 155
41 WMAX 165
42 Damping and Overshoot. 165

Tables

1 Control Type Default Configurations 129
2 EXACT Parameters and Their Meaning 159
3 Values of EXACT Parameters 162
4 Display Messages in Status ENT 167
5 Display Messages in Status SELF-TUNE 168
6 Display Messages in Status PRETUNE 168
7 Hexadecimal Options Codes 176
8 Trigger Codes and Action Equations 179

Preface

Read Me First

Use the information on this page for observing and manipulating your new 740 instrument in a safe manner (before it is connected to a process). Wire the ac power in accordance with "Wiring - Supply Connection and Voltage Selection" on page 12 and apply power; the instrument is now in the "RUN" Mode. Once power is applied to the instrument and it has initialized, it *will* respond to the keypad. "Keypads and Display" on page 23 explains the function of the keypad and display.

To see this instrument perform in the Factory Default RUN Mode, proceed as follows:

Apply Power	See: Instrument warms up and performs self diagnostics	Initializing
Wait 30 Seconds	See: Display scrolls automatically every 10 seconds	Channel 1 Ch1 100.00 °F
Push STOP CYCLE ENTER	Key: Holds (stop cycle) the current display indefinitely	Channel 1 Ch1 100.00 °F
Push ▲ ▼	Key: To return to autoscroll or manually scroll to any display of your choice	Channel 2 Ch2 100.00 °F

The 740 automatically functions in the RUN Mode after power is applied. If the instrument has not been reconfigured, it operates in accordance with the factory default parameters. See "Configuration Procedures" on page 61 for factory defaults and customer log.

To enter your own parameters, refer to the Configuration Procedures on page 61 of this instruction.

With the 740R Recorder in the RUN Mode, the pens continuously record the assigned channels while the display exhibits (every 10 seconds) the input signals for all channels configured, plus any (if applicable) calculated channels, ramp generator status displays, totalizer, or alarm

condition that may be present. Alarm symbols appear only if an alarm condition is active. For Alarm symbols, see “Alarm Symbols” on page 93

With the 740C Recording Controller in the RUN Mode, the instrument functions the same as the 740R except that the control displays are added and alternate with the channel displays.

Disconnect the power before proceeding with any wiring of the 740. Use the rest of this document as a reference for specific applications.

Introduction

General

The 740R Digital Circular Chart Recorder and 740C Recording Controller, Figure 1, can maintain up to four trends via a 12-inch nominal round chart, and indicate the measurement on a digital display. Both the chart and display are visible through windows in the door.

Four channels are available from direct input sources. However, by using optional selection "-B" (Calculated Variables), two additional calculated channels may be added. All channels may be configured in a variety of ways.

By pressing keys, an operator may change some parameters (alarm setpoints, alternate chart speed, reset of totalizers, calculated variables and control setpoints), but only if access is allowed through configuration. Configuration is the software manipulation of all user parameters (sensor type, ranges, alarms, relays, etc.) necessary for instrument application, and is explained in detail later in this document.

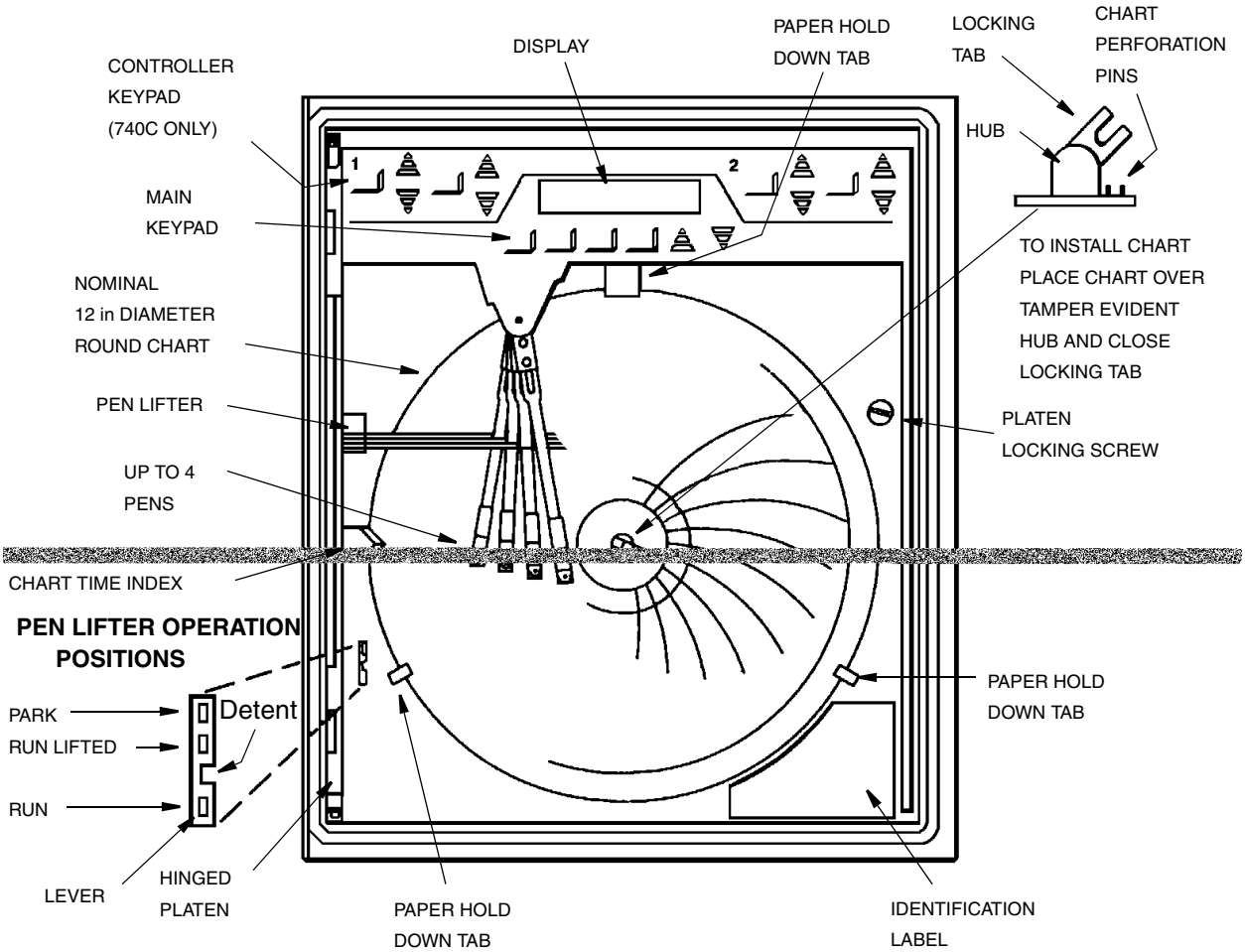

Figure 1. 740 Series Digital Circular Chart Recorder or Recording Controller (Door Removed for Clarity)

Instrument Functions

NOTE: It is very important when using this instruction that you be aware of your instrument's capabilities. The label on the front lower right side of the platen contains the Model Code which identifies the instrument as a 740R or 740C and the options provided. The text throughout this document explains all of the instrument's capabilities, not just the ones purchased. Please disregard any information that does not apply to your instrument.

This instrument functions in three modes (RUN, OPERATOR, and CONFIGURE). The instrument's information is viewed on a display and changed by pressing keys. Configuration and operator information is presented in menu fashion and may be manipulated. *Information presented in the RUN mode is displayed only and may not be manipulated.*

The RUN Mode is where the instrument records and scrolls digital values on its display. The OPERATOR Mode is where an operator may make selective changes or resets (via key strokes) to some configured items. The CONFIGURE Mode is where a technician or engineer sets (via key strokes) all of the necessary parameters. The CONFIGURE Mode is passcode protected.

To RUN the instrument, follow the steps presented in “Run Mode” on page 39 of this instruction. Do this first, as all other instrument functions start from the RUN Mode. Once the instrument has power applied, it performs a brief initialization, then it is in the RUN Mode. The instrument will first function in a factory default configuration. For the instrument to function to your specifications, it must be reconfigured.

The section “Configure Mode” on page 61 of this document includes step-by-step instructions for inputting basic parameters (via key strokes) into the CHANNEL and INSTRUMENT menus. The same type of procedure applies for all other standard and optional menus (alarms, relays, totalizers, timers, calculated variables, control, communications, ramp generator, and calibration changes).

NOTE: For an optional feature to appear in the 740 configuration menu, it must be purchased.

The OPERATOR section of this instruction is divided into several sections for recording functions, controlling functions, and ramp generator functions. See “Operator Mode” on page 41.

NOTE: For some features to appear in the 740 operator menu, they must not only be purchased, but also must be enabled in the configuration menu.

Model Code, Recorder

740RA = **Digital, Circular Chart Recorder**

Nominal Supply Voltage and Frequency

-A = 120 V ac, 50/60 Hz
-C = 240 V ac, 50/60 Hz

Input Type for Channels 1, 2, 3, and 4 (Select for Each Channel)

0 = None
1 = 0 to 20 mV dc through 0 to 5 V dc, w/Pens, RTD, and TC
2 = Greater than 0 to 5 V dc through 0 to 100 V dc, w/Pens
3 = 4 to 20 mA dc, w/Pens
6 = 0 to 20 mV dc through 0 to 5 V dc, w/o Pens, RTD, and TC
7 = Greater than 0 to 5 V dc through 0 to 100 V dc, w/o Pens
8 = 4 to 20 mA dc, w/o Pens

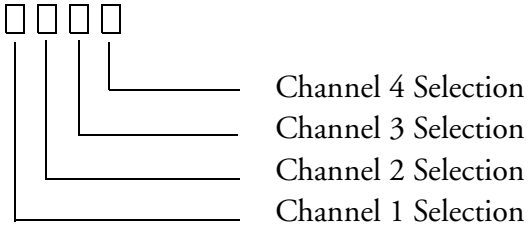

Optional Selections

-A = 28 V dc Transmitter Power Supply
-B = Calculated Variables and Custom Curve (adds Channels 5 and 6)
-C = One Totalizer
-D = Two Totalizers
-E = Three Totalizers
-F = Four Totalizers
-G = Dual Ramp Generators
-K = Tamper Evident Feature
-L = NEMA 4X Enclosure
-M = Polycarbonate Chart and Display Windows
-N = Pipe Mounting Kit (NEMA 4X)
-P = Enclosure Heater for Temperatures from -20 to 0 °C (-4 to +32 °F)
-Q = Two Relay Outputs
-R = Four Relay Outputs
-S = Six Relay Outputs

-T	= Eight Relay Outputs
-U	= Eight Contact Inputs
-V	= Sixteen Contact Inputs
	Optional Remote Totalizer Counter and Retransmission Output(s)
-1	= One Totalizer Output
-2	= Two Totalizer Outputs
-3	= Three Totalizer Outputs
-4	= Four Totalizer Outputs
-5	= One 4 to 20 mA Retransmission Output
-6	= Two 4 to 20 mA Retransmission Outputs
-7	= Three 4 to 20 mA Retransmission Outputs
-8	= Four 4 to 20 mA Retransmission Outputs

Model Code, Controller

740CA = **Digital, Circular Chart Recording Controller**

Nominal Supply Voltage and Frequency

-A = 120 V ac, 50/60 Hz
-C = 240 V ac, 50/60 Hz

Input Type for Channels 1,2,3,and 4 (Select for Each Channel)

0 = None
1 = 0 to 20 mV dc through 0 to 5 V dc, w/Pens, RTD, and TC
2 = Greater than 0 to 5 V dc through 0 to 100 V dc, w/ Pens
3 = 4 to 20 mA dc, w/Pens
6 = 0 to 20 mV dc through 0 to 5 V dc, w/o Pens, RTD, and TC
7 = Greater than 0 to 5 V dc through 0 to 100 V dc, w/o Pens
8 = 4 to 20 mA dc, w/o Pens

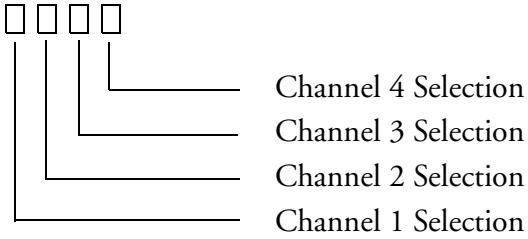

Control Type

A = One PID without EXACT Tuning
B = One PID with EXACT Tuning
C = Two PIDs without EXACT Tuning
D = Two PIDs one with EXACT Tuning
E = Two PIDs both with EXACT Tuning

Output Type

A = Single 4 to 20 mA Output for one controller
B = Duplex 4 to 20 mA Output for one controller
C = Two single 4 to 20 mA Outputs for two controllers
D = Two duplex 4 to 20 mA Outputs for two controllers
E = Single 4 to 20 mA Output for one controller, and Duplex 4 to 20 mA Output for the second controller
F = Single time duration, relay output for one controller
G = Duplex time duration, relay outputs for one controller
H = Two single time duration, relay outputs for two controllers
I = Two duplex time duration, relay outputs for two controllers

J	= Single time duration, relay output for one controller, and Duplex time duration, relay output for the second controller
	Optional Selections
-A	= 28 V dc Transmitter Power Supply
-B	= Calculated Variables and Custom Curve (adds Channels 5 and 6)
-C	= One Totalizer
-D	= Two Totalizers
-E	= Three Totalizers
-F	= Four Totalizers
-G	= Dual Ramp Generators
-K	= Tamper Evident Feature
-L	= NEMA 4X Enclosure
-M	= Polycarbonate Chart and Display Windows
-N	= Pipe Mounting Kit (NEMA 4X)
-P	= Enclosure Heater for Temperatures from -20 to 0° C (-4 to +32° F)
-Q	= Two Relay Outputs
-R	= Four Relay Outputs
-S	= Six Relay Outputs
-T	= Eight Relay Outputs
-U	= Eight Contact Inputs
-V	= Sixteen Contact Inputs
	Optional Remote Totalizer Counter and Retransmission Outputs
-1	= One Totalizer Output
-2	= Two Totalizer Outputs
-3	= Three Totalizer Outputs
-4	= Four Totalizer Outputs
-5	= One 4 to 20 mA Retransmission Output
-6	= Two 4 to 20 mA Retransmission Outputs
-7	= Three 4 to 20 mA Retransmission Outputs
-8	= Four 4 to 20 mA Retransmission Outputs

Standard Specifications

Number of Inputs	1, 2, 3, or 4
Input Signal Types	
Thermocouple (TC)	Types B, C, E, J, K, L, N, R, S, and T
Resistance Temperature Detector (RTD)	100 Ω Platinum, ANSI or DIN; 10 Ω Copper; 100 or 120 Ω Nickel
mA dc	4 to 20 mA or other mA dc Inputs
mV dc	-80 to +400 mV dc
V dc	0 to 100 V dc
Standard Linearizations Provided	Square root, Power 3/2 and 5/2 and Log 10
Power Supply	90 to 132 V ac or 180 to 264 V ac, as specified
Power Rating	30 Ω, maximum (90 Ω with optional heater, Code "-P")
Thermocouple Burnout Detection	Response time, 35 seconds or less. Leadwire Zero Error due to burnout, 500 mA burnout current
RTD Excitation Current	0.5 mA ±20%
Channel Isolation	All channels are electrically isolated to 250 V from each other, line, and earth (ground).
Input Impedance (for Voltage Inputs Only)	
5 V dc or less	20 MΩ, minimum
Over 5 V dc	1 MΩ divider
Cold Junction Compensation	±1° C from 0 to 50° C ±1.8° F from 32 to 122° F
Common Mode Rejection	140 dB minimum at 50 or 60 Hz up to 250 V ac
Normal Mode Rejection	50 dB minimum at 50 or 60 Hz up to two times maximum input signal range in V ac, peak-to-peak, or 5 V peak-to-peak, whichever is smaller for the selected range
Sample Rate	Two samples per second on each channel
ac Power Interruptions	No effect for interruptions of up to 150 ms
Radio Frequency Interference (RFI) Susceptibility	Maximum shift of 3% at 10 V/m, from 20 to 1000 MHz (provided that signal and power leads are in separate metal conduit)
Enclosure	NEMA 4 rated polyester sheet molding compound with shatterproof glass windows
Approximate Mass	8.2 kg (18 lb)

Installation

Unpacking the 740

The instrument is shipped in a special container, designed to ensure protection during transit.

After removing the 740 from the container, examine the packing before it is discarded to ensure that all accessories and documentation have been removed.

Door and Platen Operation

Open the door by pulling the latch out and to the right as shown in Figure 2. The door opens to about 120° and is prevented from opening further by a door stay. To close the door, lift the door stay slightly, then swing door back and close the latch. A hinged platen is exposed once the enclosure door is opened. To open the platen, loosen the captive screw and swing it out. There is no stay to hold the platen open. Swinging out the platen provides access to the rear surface of the enclosure where the instrument electronics and optional printed wiring assemblies (PWAs) are mounted.

Mounting

The 740 may be surface mounted, panel mounted, or attached to a nominal DN 50 or 2-inch pipe. It may be tilted back up to 30° from vertical. See Figure 3 for mounting dimensions. Also see Dimensional Print DP 018-846.

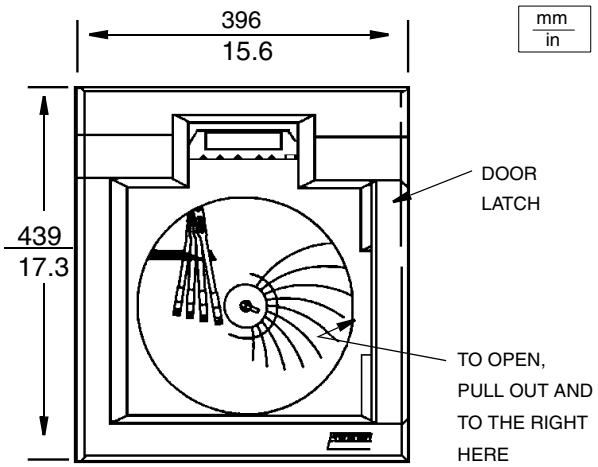

Figure 2. Door Latch

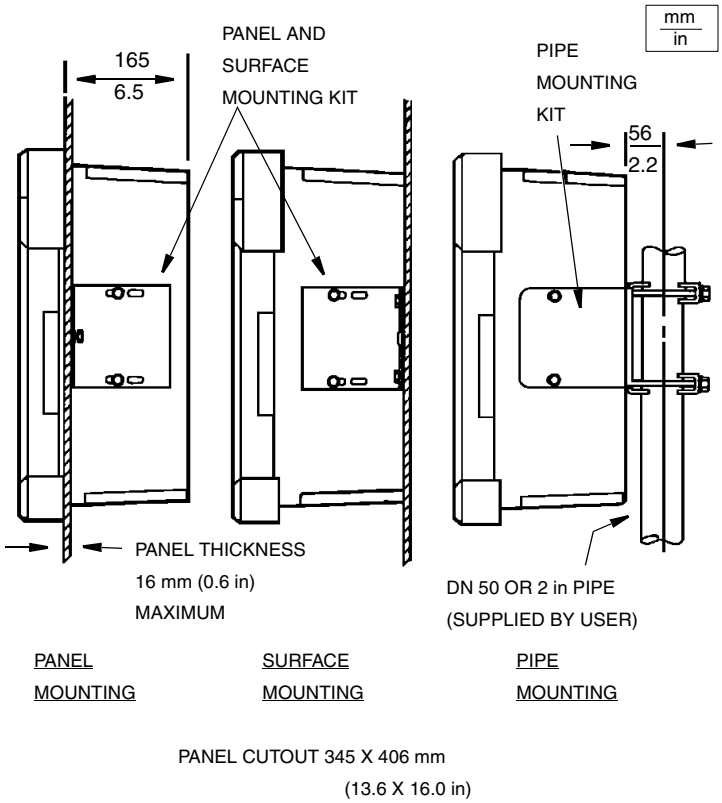

Figure 3. Dimensions

Pen Installation and Replacement

The 740 uses up to four disposable fiber tip pens. If you have purchased an instrument with one pen, it will be red and will line up with the chart time index. If you have purchased an instrument with two or more pens, the purple pen will line up with the chart time index.

Pens are shipped in foil packages containing two pens each of the same color. Pen colors cannot be interchanged. The pen sequence, color, and ordering part numbers are as follows:

Pen One (Innermost Pen):	Red	Part Number L0122AR
Pen Two:	Purple	Part Number L0122BP
Pen Three:	Green	Part Number L0122CG
Pen Four (Outermost Pen):	Blue	Part Number L0122DB

The pens should be lifted and “parked” before they are changed to prevent damage to the pen arms. See “Pen Park” in the “Operator Mode” on page 41.

With the pen arms *Parked* and spread, install the new pen by sliding it over the pen arm so that the locking tab on the front of the pen snaps into the small hole at the end of the arm. See Figure 4.

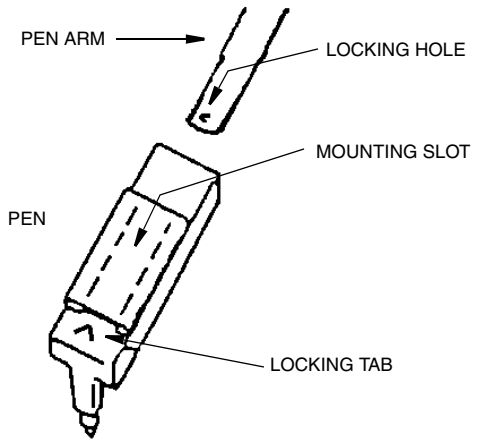

Figure 4. Fiber Tip Pen Installation

Chart Installation and Replacement

To change or install a chart, refer to Figure 1 and proceed as follows:

1. Open the door.
2. Move the lever on the pen lifter operator to its top position. This lifts the pens off the paper and causes them to swing out of the way to the left side of the chart.
3. Lift the chart locking tab at the center of the chart hub and remove the old chart by lifting it off the hub and out from under the hold down tabs.

Place the new chart under the hold down tabs and onto the hub. Do ***not*** lower the locking tab yet.

4. Rotate the chart until the current time is aligned with the chart time index. Press the chart locking tab into place.
5. Move the pen lifter down one step (just above the detent tab) to allow the pens time to reposition themselves across the chart. Then move the lifter past the detent to lower the pens onto the paper.

General Wiring Practices

In order to insure maximum recorder performance, it is *very important* that proper wiring practices be followed.

The proper operation of microprocessor-based instruments can be affected by electrical noise. The problems caused by electrical noise range from configuration loss to component failure. To prevent or minimize the effects of electrical noise, consideration must be given to the various possible noise sources, and then appropriate suppression steps must be taken.

Among the most common instrument connected causes of electrical noise are:

- Relays and SCR Switches
- Valve Solenoids
- Electric Motors
- Power Line Disturbances
- Wire-to-Wire Coupling
- ESD (Electrostatic Discharge)
- RFI (Radio Frequency Interference)
- EMI (Electro-Magnetic Interference

Jumpers and Wiring

Jumpers

There are jumpers on the printed wiring assemblies (PWA). These jumpers are factory set at the time of ordering. However, changes in configuration may necessitate checking or repositioning some of these jumpers. Refer to Figure 5 for PWA locations and proper jumper positions.

CAUTIONS:

1. If Input Function TC, mV, V, or Current and Input Function "RTD" are used on the same Input PWA, the TC, mV, V, or Current must be the first input, and "RTD" the second input.

2. When the "CJC\RTD" jumper is in the "RTD" position, neither channel will accept a thermocouple input.

3. The TC Burnout feature (UP/DOWN) will not work if the "RTD\TC" jumper is in the "RTD" position.

4. If "RTD" is the chosen input for a particular channel, the Thermocouple Burnout Jumper (UP/DOWN) for that channel must be parked (jumper placed sideways on the center pin only).

Wiring - Supply Connection and Voltage Selection

The supply voltage selector switch (covered with a clear label stating *"Warning, see MI 018-871"*) matches the correct internal circuitry with the voltage supplied. If changing the supplied voltage (115 = nominal 90 to 132 V ac, 230 = nominal 180 to 264 V ac) from one to the other, simply remove the label and move the switch. Power connections are made on the main PWA, all internal power connections are factory wired. Make your connections to the separately supplied orange power plug (B0195FK) as shown in Figure 5.

CAUTIONS:

1. User's earth ground wire must connect to the instrument case ground terminal located in inside right wall of instrument case.

2. If your instrument is equipped with the optional 28 V dc field power supply (Code "-A") and you change the ac power supply to other than the original setting, then the internal power supply jumpers must also be changed to agree.
If your instrument is equipped with the optional internal heater (Code "-P") and you change the ac power supply to other than the original setting, the internal heater must be replaced or removed.

Wiring - Signal Inputs - General

The 740 can be connected and configured to operate with a variety of signal sources such as: Thermocouples, RTDs, dc Current, and dc Voltage.

Refer to the following diagrams for wiring these different inputs.

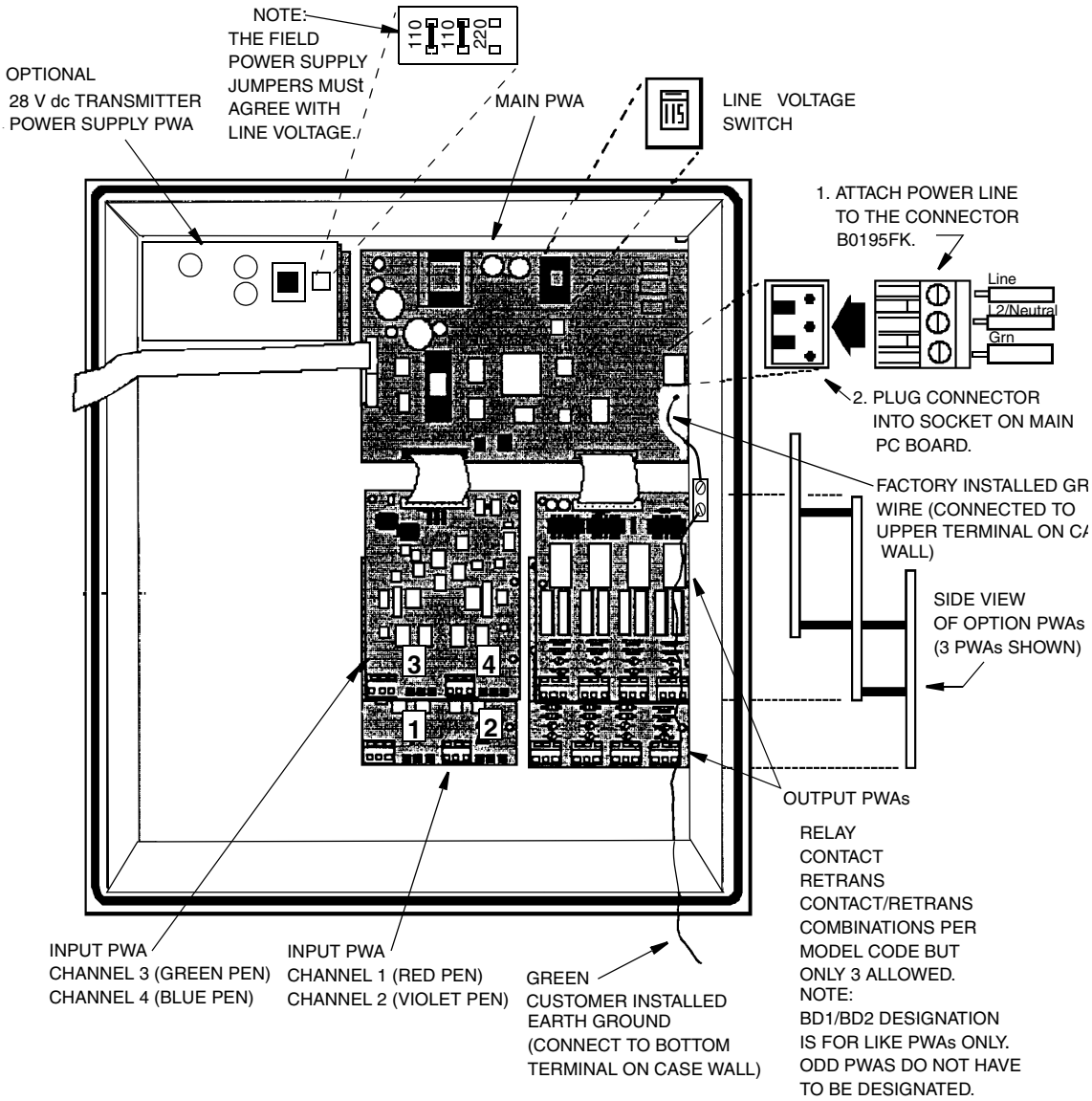

Figure 5. Power Supply Wiring

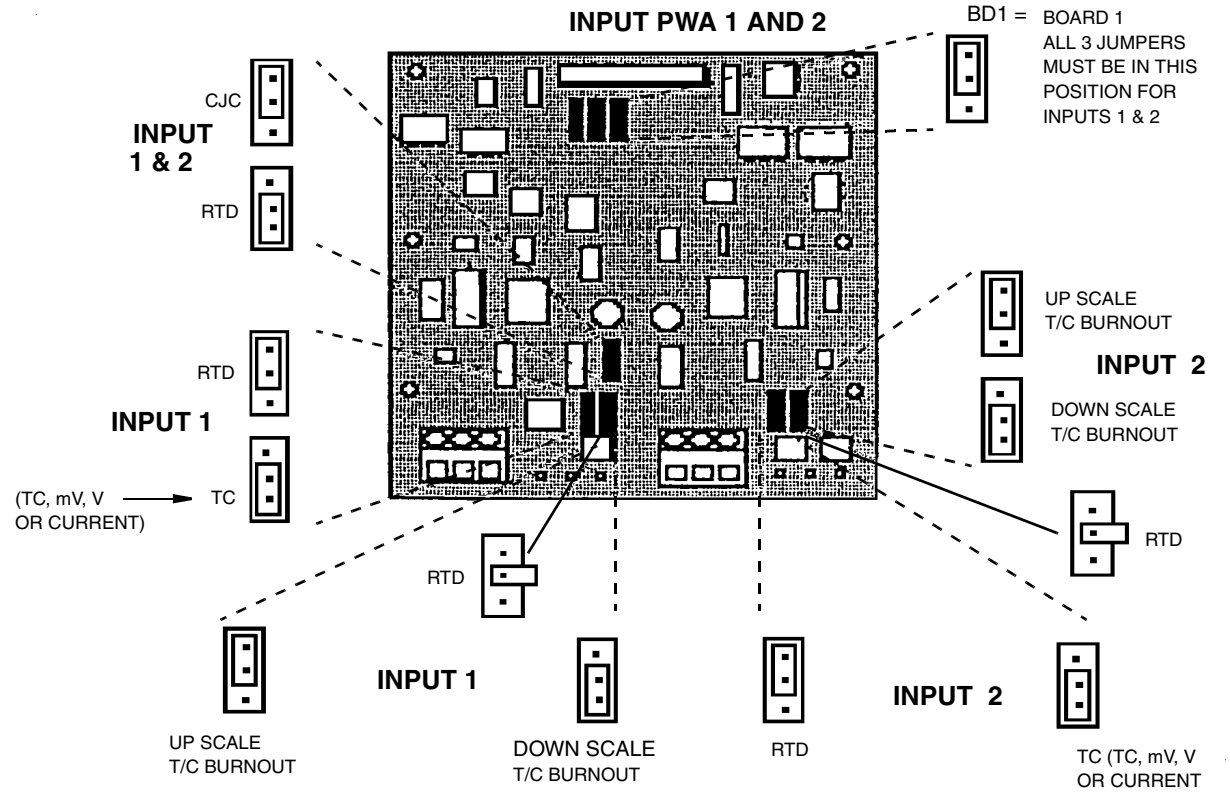

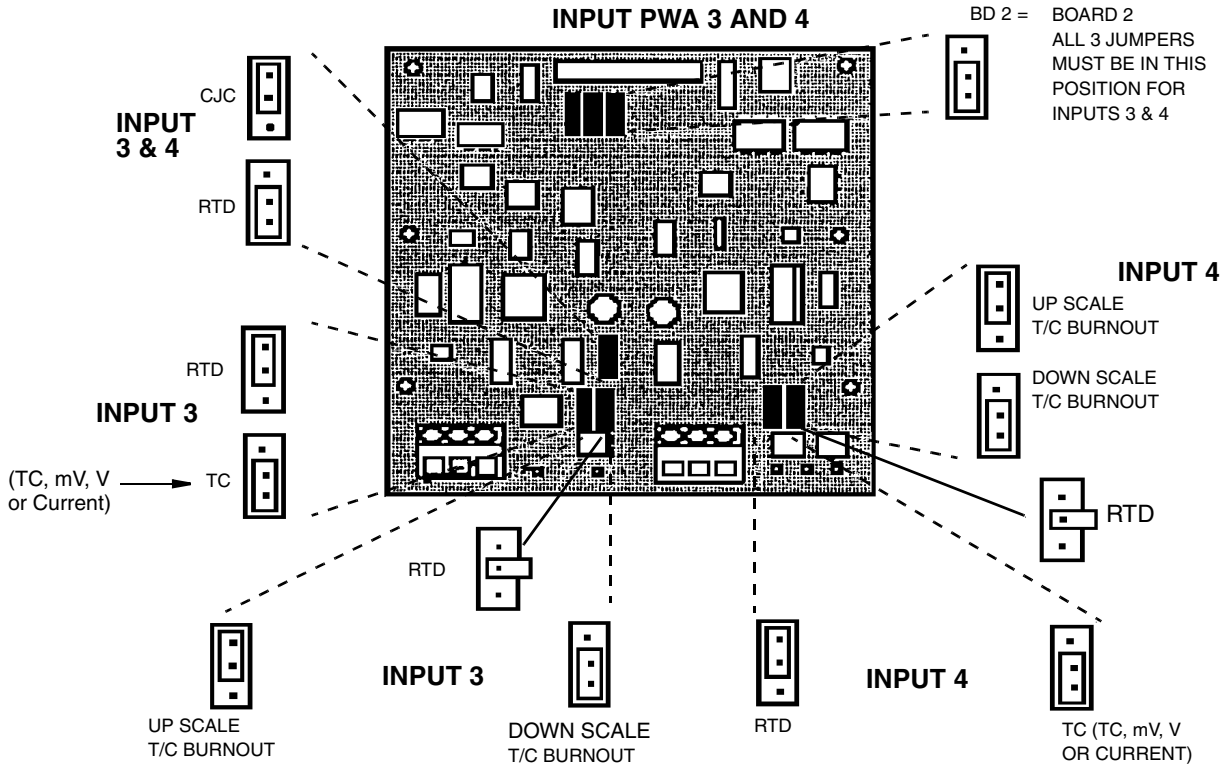

Figure 6. Jumper Positions and Locations

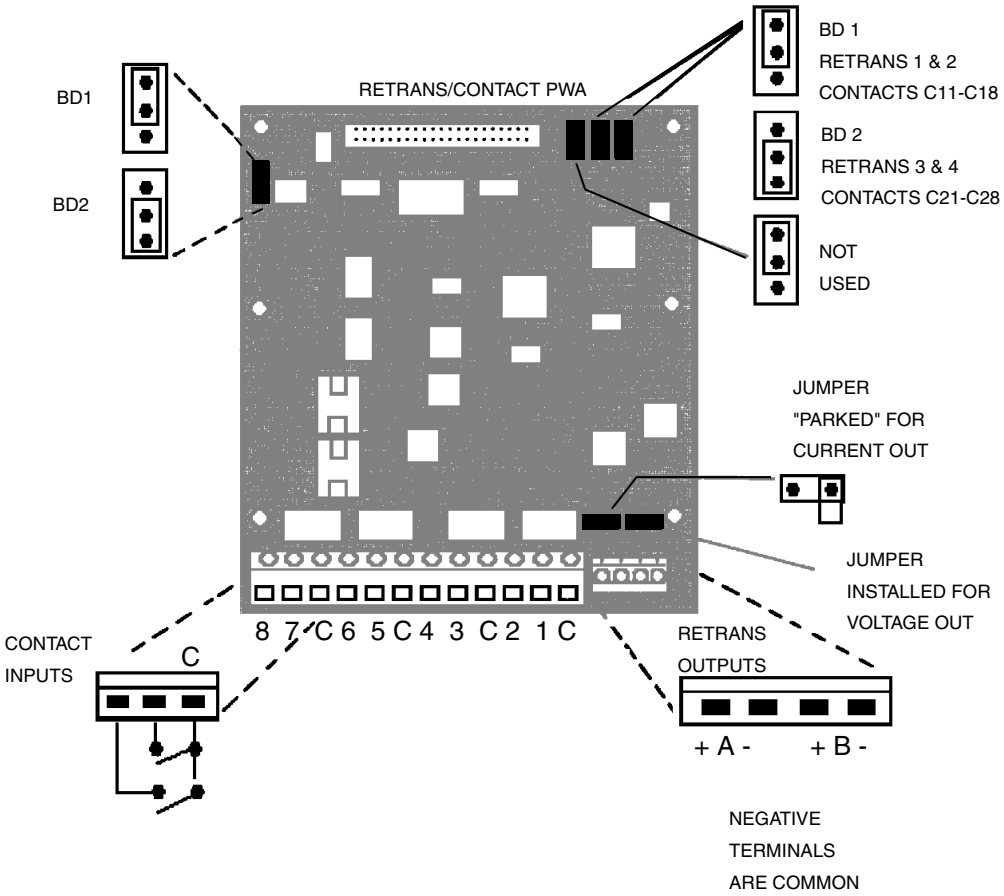

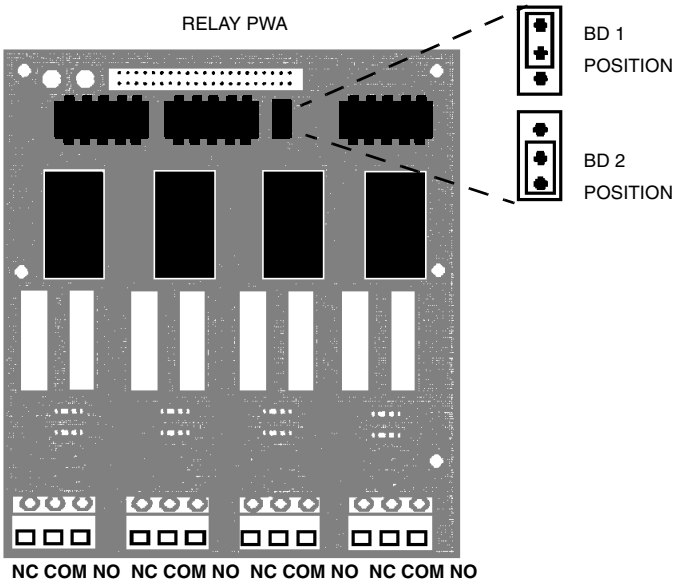

Figure 7. Jumper Positions and Locations (Continued)

Wiring - Thermocouple Inputs

Thermocouples are connected directly to the Channel PWA Terminals using the + and - terminals for the designated channel. See Figure 5 and Figure 8.

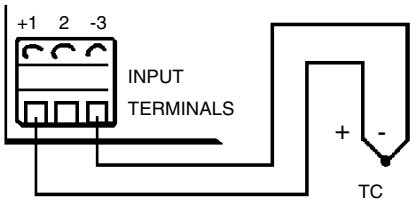

Figure 8. Thermocouple Wiring

Wiring - Resistance Temperature Detector (RTD) Inputs

The instrument supplies the actuation current and direct connections for 2-and 3-lead 100 Ω platinum, copper, and nickel RTDs. Figure 5 and Figure 9 show proper RTD connection. Leadwire size and length must be chosen to ensure that lead lengths are equal, and individual leads do not exceed 10 Ω between the instrument and the RTD.

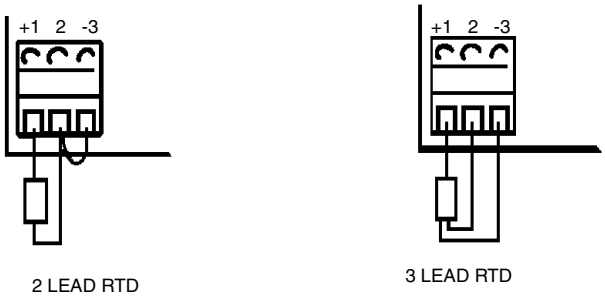

Figure 9. Resistance Temperature Detector (RTD) Wiring

Wiring - Direct Voltage Inputs (Up to 5 V dc)

Voltage inputs to a *maximum* of 5 V dc are connected directly to the instrument terminal board. See Figure 5 and Figure 10.

***CAUTION**: Input PWA circuitry is protected for overvoltage up to 24 V dc. Voltages above 24 V dc MAY DAMAGE INPUT CIRCUITRY.*

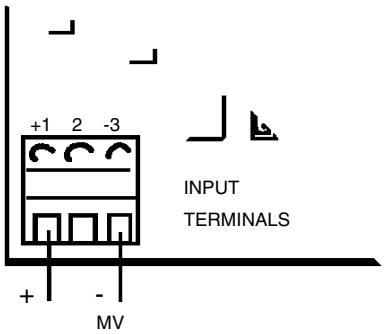

Figure 10. mV/Volt Wiring

Wiring - Direct Voltage Inputs (Above 5 V dc)

Inputs from 5 V dc up to 100 V dc can *only* be connected using a 1 MΩ 100:1 voltage divider. This results in an instrument input voltage of 50 mV with a 5 V signal, and 1 V with a 100 V Signal Current Input. Units ordered with this input come with a mini board, Foxboro Part Number B0195EC, on the input terminal for that channel. See Figure 5 and Figure 11.

Example

A linear voltage of 2 to 10 V dc is to be used as an instrument channel input. Since one of these values is over 5 V, the 100:1 Input divider MUST be used. This results in an effective instrument range of 2 V ÷ 100 = 20 mV low end and 10 V ÷ 100 = 100 mV high end.

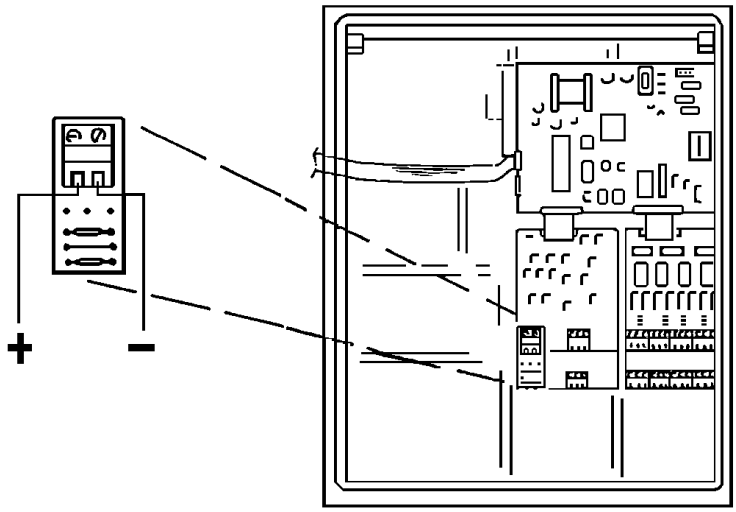

Figure 11. Voltage Divider Mini Board Wiring

Wiring - Current Inputs (Using 740 Powered Transmitter)

The 28 V dc required to operate a transmitter can be provided by an instrument mounted power supply (option "-A"). This supply is connected to a shunt at the terminal PWA. The PWA is a mini board, Foxboro Part Number B0195ED, with 250 Ω resistor, converting the 4 to 20 mA signal to 1 to 5 V. The PWA mini board connects to the power supply via a red and black twisted pair of wires. See Figure 12.

CAUTIONS:
1. If a calibrator is used to check the operation of the 740, be sure to disconnect the internal power supply and rewire the input as shown in "Wiring - Current Input" on page 20, Figure 13, or damage to the 740 will result.
2. See "Wiring - Current Input" on page 20 or "Wiring - Current Inputs (Using 740 Powered Transmitter)" on page 19 for wiring self-powered transmitters.

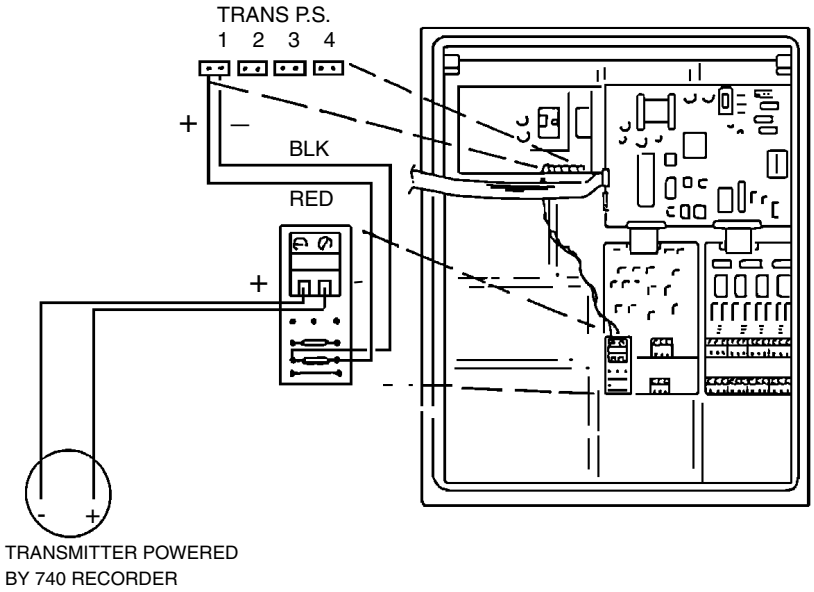

Figure 12. Current Input from Transmitter Powered by 740 Recorder

---

CAUTION: Failure to observe correct polarity as shown may damage transmitter or recorder.

Wiring - Current Input

(Using self-powered transmitters when the optional instrument supply is included but not being used)

All 740s ordered with 4 to 20 mA inputs and the optional 28 V dc power supply (Code "-A"), have the power supply pre-wired to each input. Use the following wiring arrangement if a self-powered transmitter is used to provide the input. See Figure 13.

1. Unplug the red and black lead corresponding to the input being used from the power supply and place it out of the way in the bottom of the case.

***CAUTION**: Failure to remove this lead could damage the transmitter or the 740.*

---

2. Wire the self-powered transmitter as shown. Note that the polarity is opposite from an instrument powered transmitter.

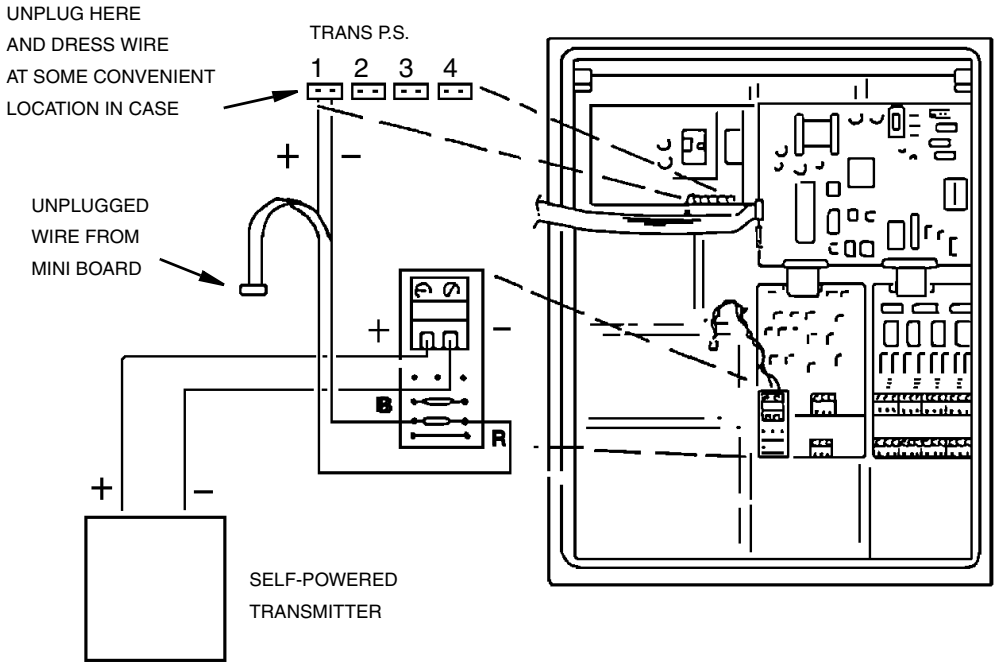

Figure 13. Current Input
(Self-Powered Transmitter with Instrument Power Supply NOT Being Used)

Wiring - Current Inputs (Using Self-Powered Transmitter)

The connection of a 4 to 20 mA device (with a separate, external power supply) to the 740 requires only the use of a shunt resistor to convert the current signal into a voltage input (mini board, Foxboro Part No. B0195EE, with 250 Ω resistor for a 1 to 5 V input). See Figure 14.

***CAUTION**: See "Wiring - Current Input" on page 20 for wiring if 740 recorder **has** optional power supply but is **not** being used.*

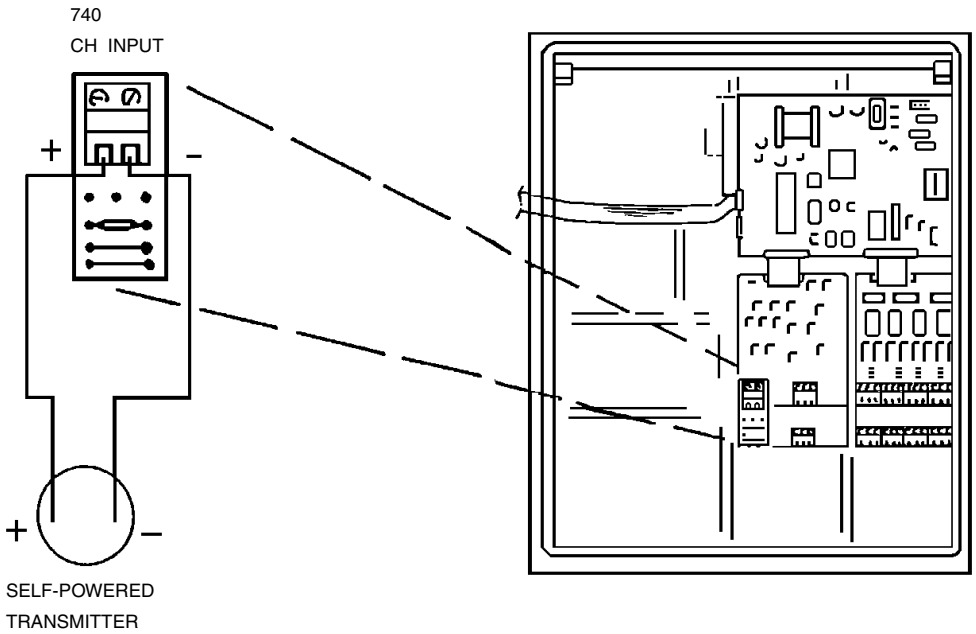

Figure 14. Current Input (with Self-Powered Transmitter)

Wiring - Relay Outputs

The terminals on the optional relay PWA are plainly marked for Normally Open (NO), Normally Closed (NC), and Common (COM) connections. See Figure 5.

Wiring - Retransmission Output and Contact Input

The terminals on the optional Retransmission/Contact Input PWA are plainly marked for the contact inputs. For the retransmission outputs, the A +/- are on the left side of the retrans output terminal, the B +/- are on the right. See Figure 5.

Keypads and Display

Menu and Select Keypad

The MENU and SELECT keypad, located just below the digital display, allows the user to make desired selections when moving (scrolling) through various menus. Figure 15 shows the keypad and explains the function of each key.

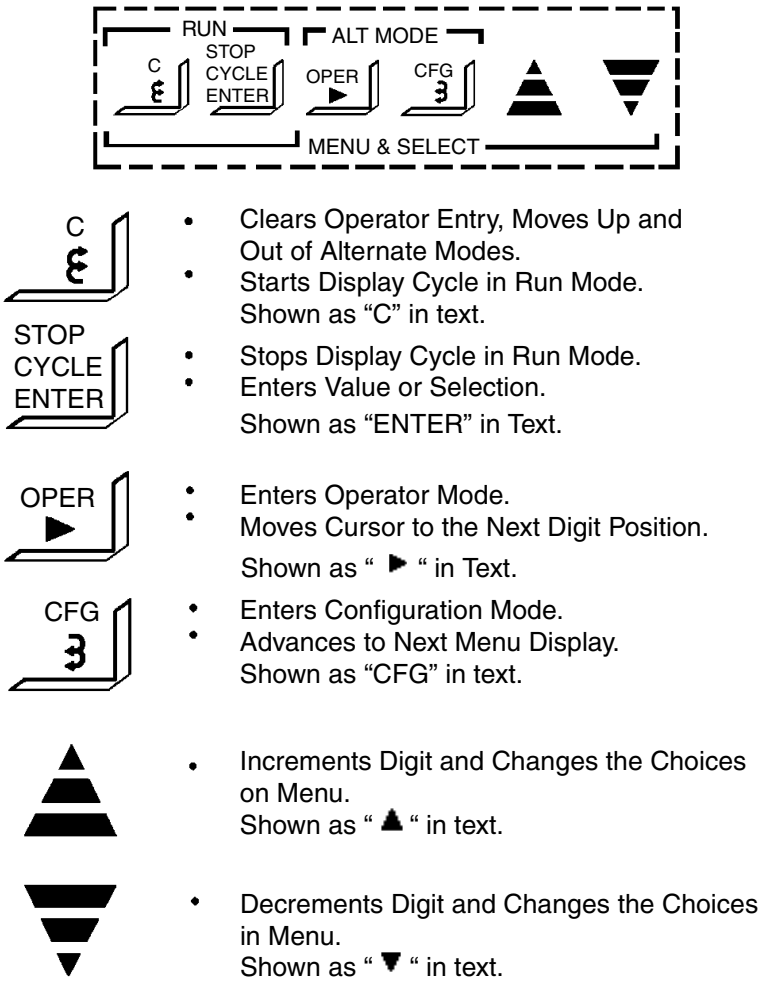

Figure 15. Keypad Description

The keypad uses a Scroll-and-Select method of alphanumeric data entry. When a word or number entry is required on a configuration display, a Cursor appears on the second line. The SIDE ARROW Keys (▶) are used to move the Cursor. The ▲ ▼ Keys are used to Scroll through a Library of alphanumeric characters for selection of numbers, letters, and special characters. When scrolling through the listing, the speed of the scroll increases after the first

six characters and again after the next six characters. Refer to the Character Library, Figure 16, to determine whether to scroll Up or Down to the next desired character.

ABCDEFGHIJKLMNOPQRSTUVWXYZ[\]^_'{ |}÷■!"#$%&'()*+,-./0123456789:;<=>?@

Figure 16. Character Library

Controller Keypad

The controller keypad is supplied on the 740C version only. The Controller 1 keypad is located to the left of the digital display; the Controller 2 keypad is located to the right of the digital display. If only one controller is supplied, both keypads are present, but the Controller 2 keypad is inoperative. Figure 17 shows the keypad and explains the function of each key.

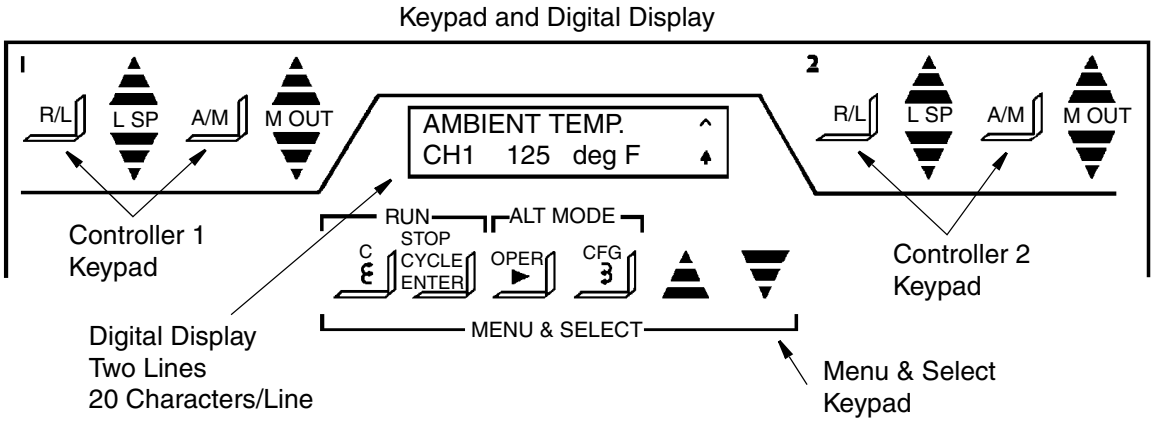

Figure 17. Controller Keypad

R/L	Selects either **R**emote or **L**ocal setpoint (when RSP is enabled)
▲ ▼ **LSP**	Moves the value of the **L**ocal **S**et **P**oint, up or down; **A/M** selects either **A**utomatic or **M**anual output
▲ ▼**M OUT**	Moves the value of the **M**anual **O**utput, up or down

Digital Displays

The digital display, located at the top center of the platen, is made up of two lines, 20 characters each. It is used to view the measurement and controller output/setpoint while the instrument is in the RUN Mode or view settings when in the Operator or Configuration Mode.

Configuration Display

The CONFIGURE Display format uses 16 of the 20 characters in each of the two lines. The remaining four character positions are for alarm indication. See Figure 18 for typical configuration display.

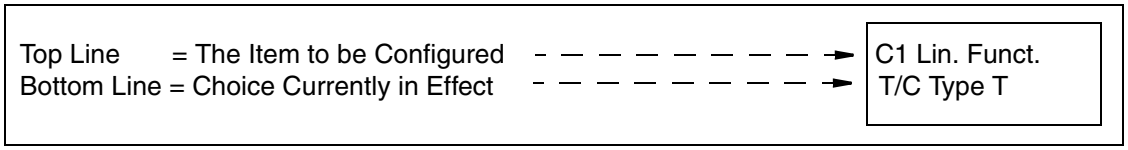

Figure 18. CONFIGURE Display

Run Display

The RUN Display also has two lines of 16 characters. Each active channel has a dedicated RUN Mode display in which the upper display represents the channel description and any alarm conditions (see "Alarm Symbols" on page 93), while the lower display indicates the channel number, measurement and engineering units, plus any global or instrument alarm conditions. Each active controller has a dedicated RUN Mode display as described below. This display automatically scrolls to the next display every 10 seconds. If totalizers or ramp generators are among your options, then they will scroll through after the channels. See Figure 19 for a typical RUN MODE display. See Figure 20 for a Ramp Generator display.

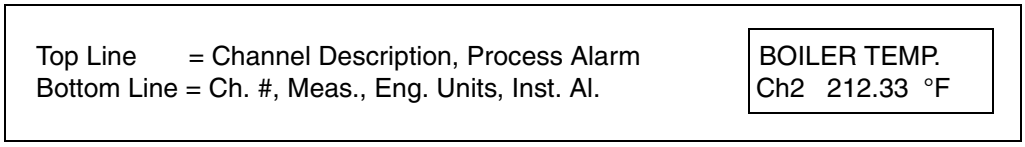

Figure 19. RUN Display

Ramp Generator Display

The Ramp Generator Display is only visible with the -G optional selection. It is actually a 2-display sequence. The first display exhibits Trace 1 and 2 Values, Alarms, Recipe and Segment Number, Time to Go, and Event Status. The second display (automatically scrolled 10 seconds after the first display) shows the Ramp State (Running, Holding, or Done), Alarms, and Elapsed Time since the timer was set. Figure 20 shows the two Ramp Generator displays.

Top Line = Trace 1 and 2 values, process, and instrument alarms.

Bottom Line = Recipe No., Segment No., segment time counting down to 0 (reads 0 for the last minute, 1 for the next-to-the-last minute, etc.) and Event Output status.

```
1  23.9  2  35.4 ( ) ( )
R1  19  60M  12  4
```

Top Line = Recipe Status (Running, Holding, or Done.

Bottom Line = Elapsed Time in minutes. Time reads 0 from 0-1 minute, 1 from 1-2 minutes, etc.

```
RUN              ( ) ( )
        15M
```

Figure 20. Ramp Generator Display

Controller Display

As soon as any key on either controller keypad is pushed, the display for that controller appears. The CONTROLLER Display utilizes the same characters as the other displays. It is only visible in the 740C Recording Controller. The top line displays the remote or local set-points and the automatic or manual output. The bottom line displays the actual measurement and its appropriate engineering units.

By requesting information from the appropriate keypad (left side for Controller 1 or right for Controller 2) the display reads the selected controller, i.e., LSP1 for Controller 1 or LSP2 for Controller 2. Figure 21 shows a typical control display.

Top Line = R/L setpoint value; % output (A/M)
Bottom Line = Measurement value (PV), eng. units

```
LSP1   70.0    0.0%A
 PV1   48.40    °F
```

Figure 21. CONTROLLER Display (With 740C only)

Menu Structure Diagram

Figure 22 is the 740 Menu Structure Diagram. It is essentially a road map that guides you through the three Modes of Operation - RUN, CONFIGURE, and OPERATOR. As you become familiar with the instrument, the structure diagram (road map) is probably all you will need to configure and operate your 740.

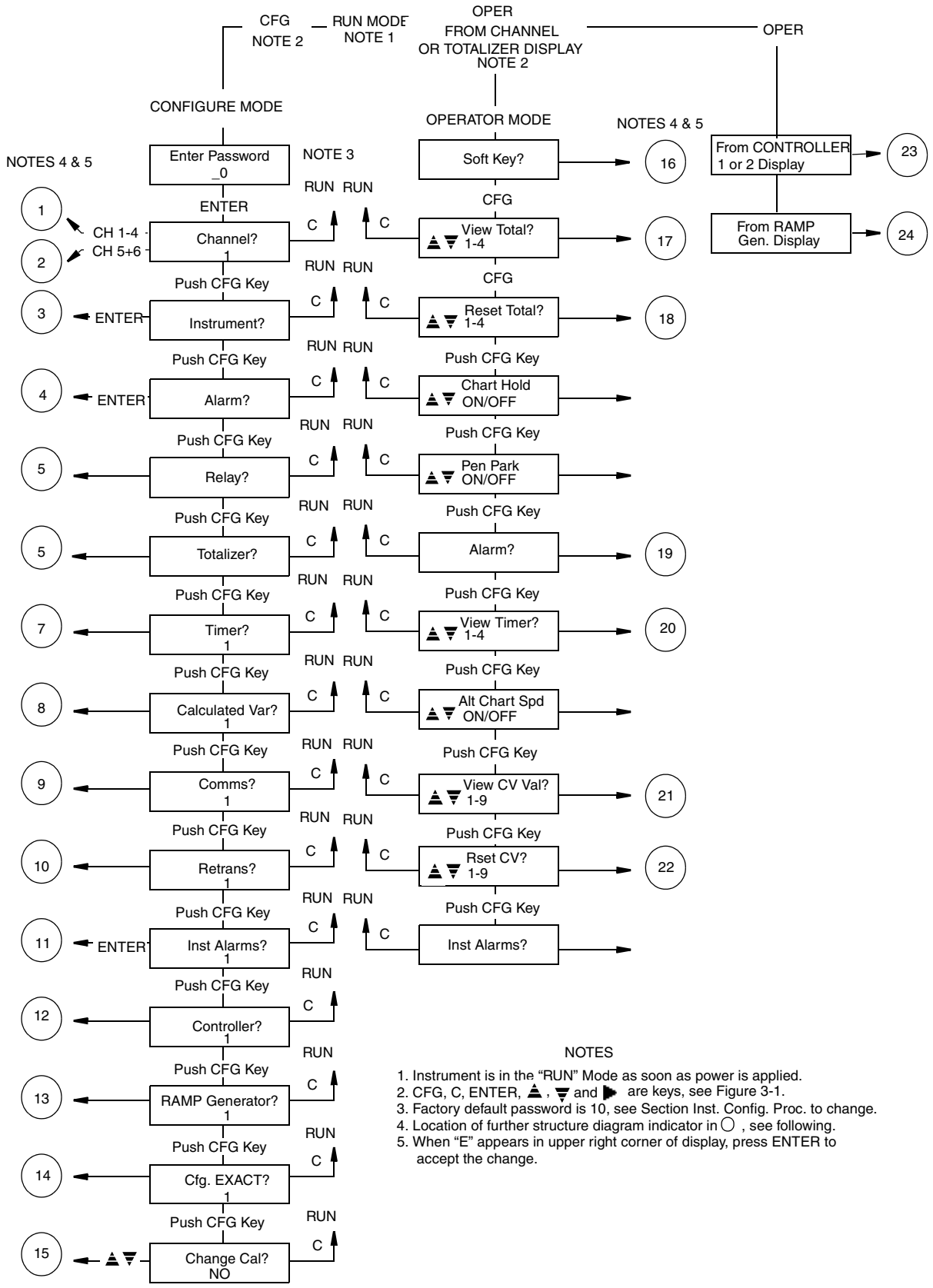

Figure 22. Model 740 Menu Structure Diagram - Sheet 1

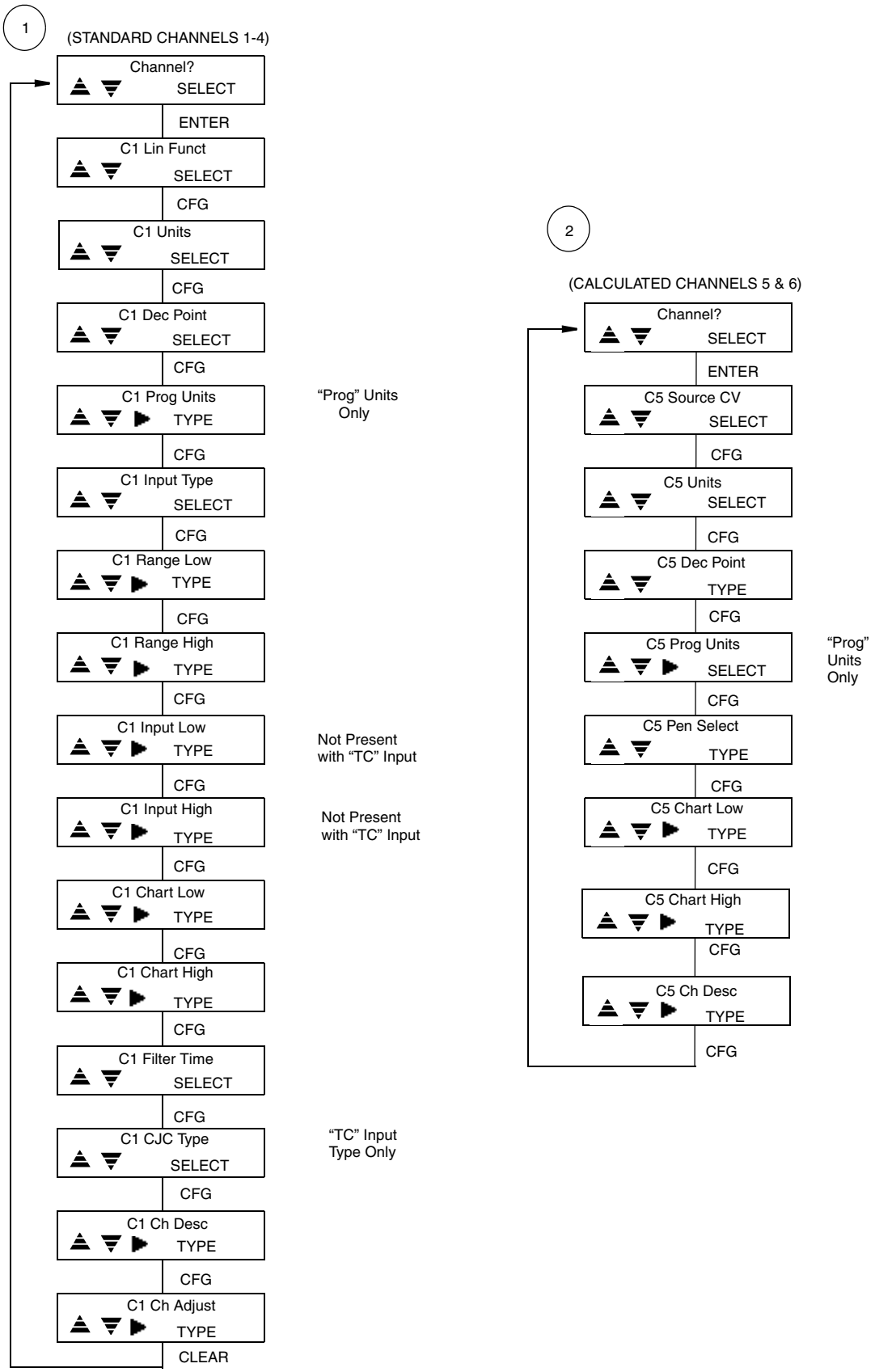

Figure 23. Model 740 Menu Structure Diagram - Sheet 2

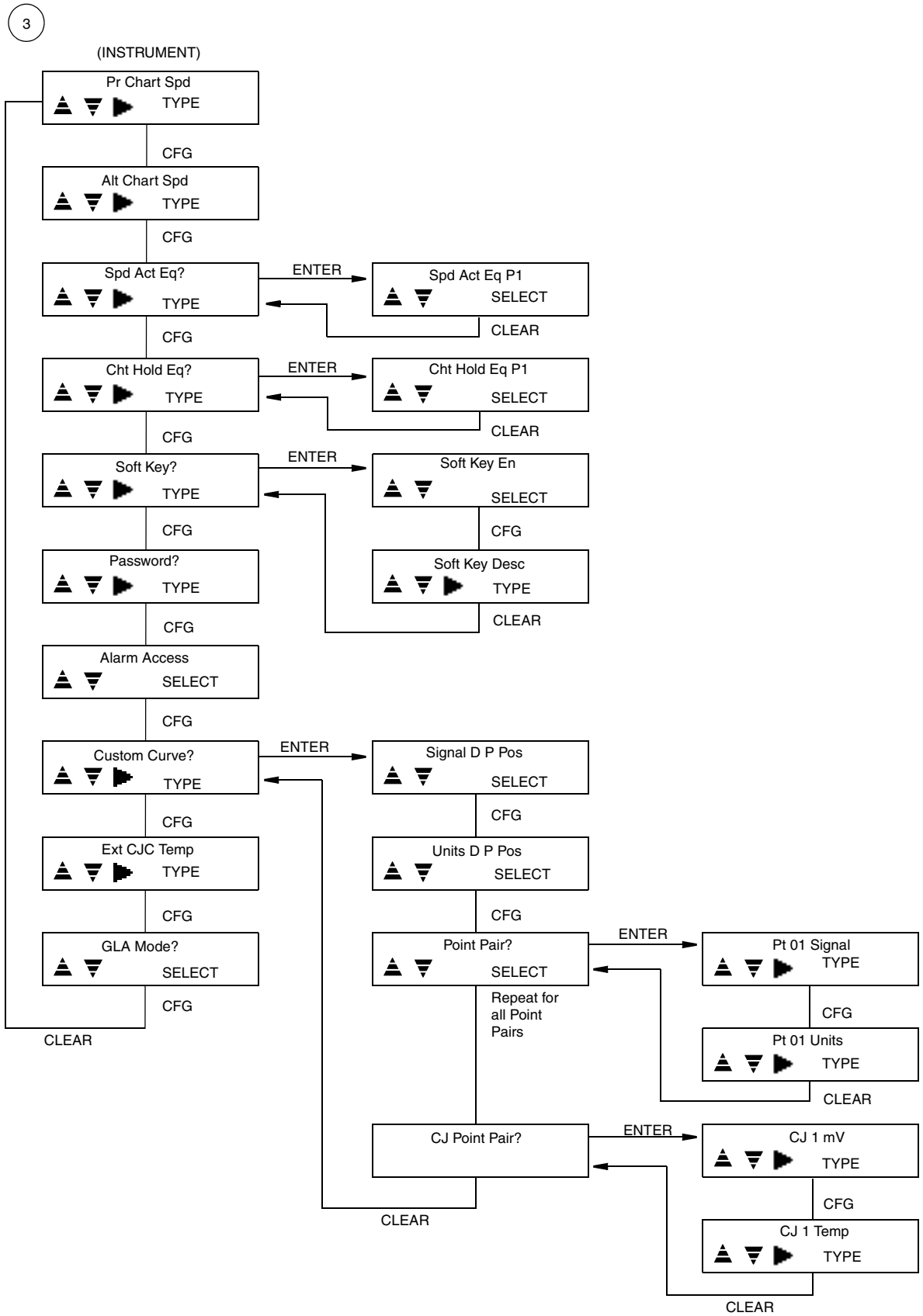

Figure 24. Model 740 Menu Structure Diagram - Sheet 3

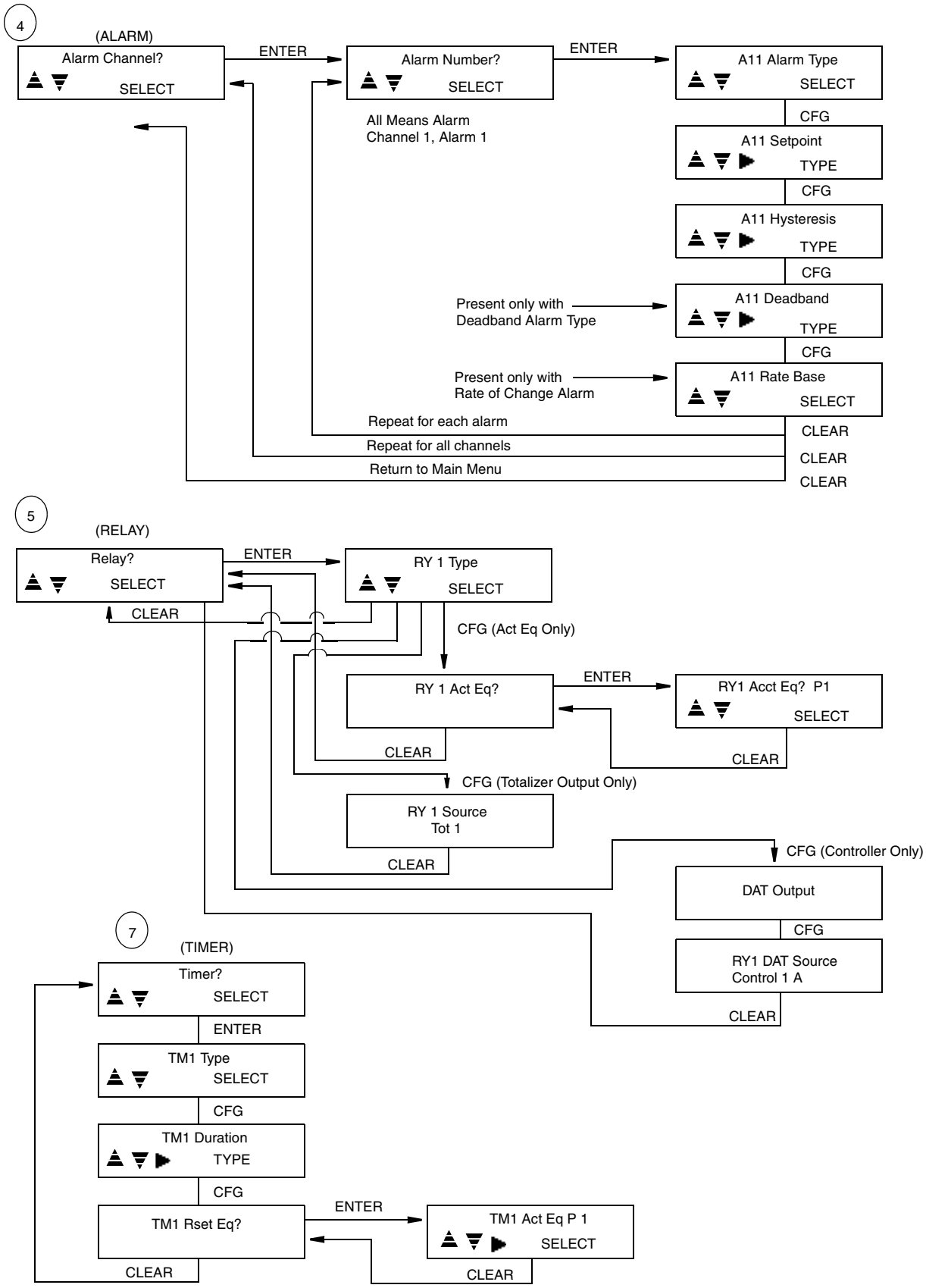

Figure 25. Model 740 Menu Structure Diagram - Sheet 4

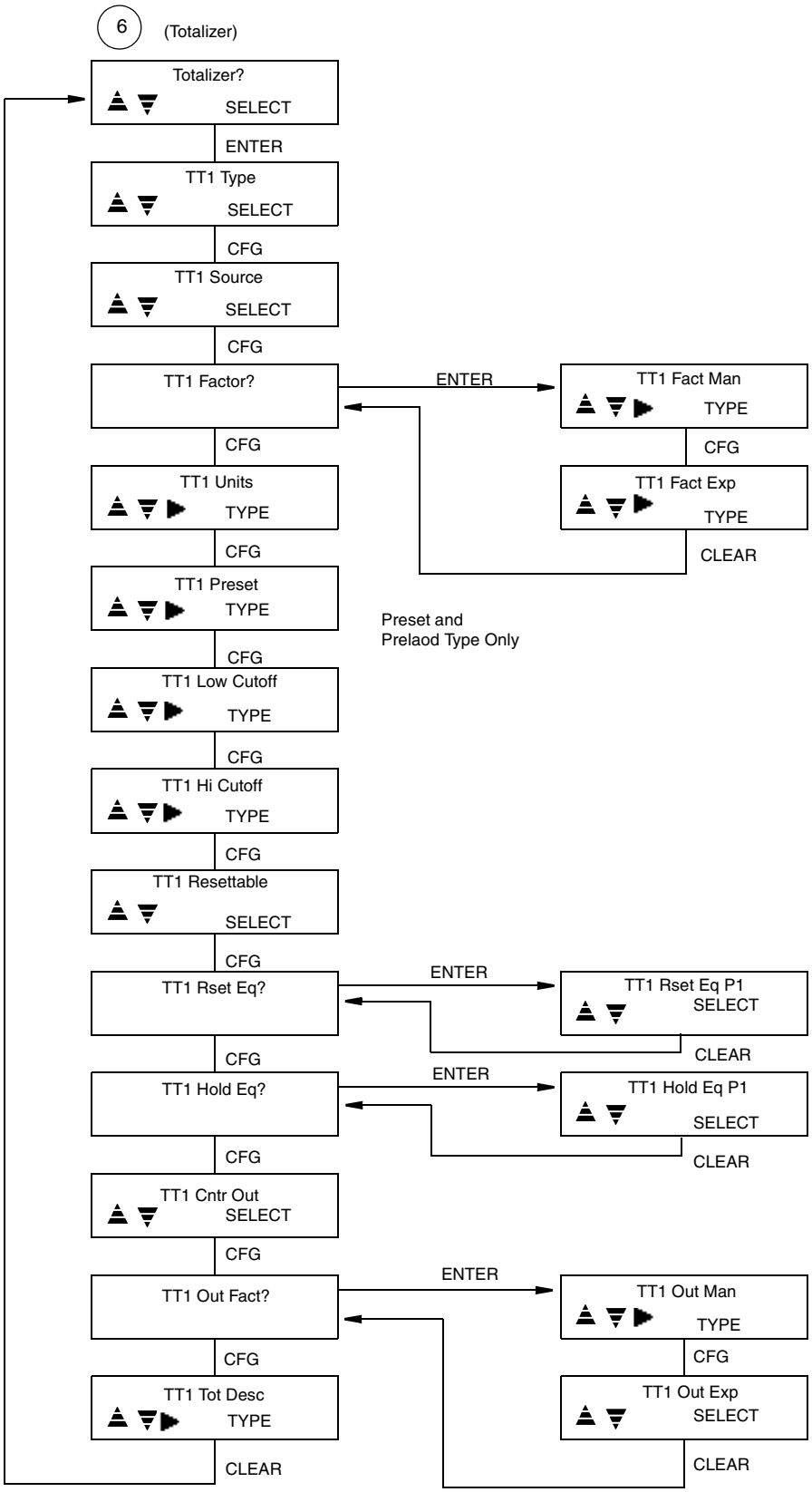

Figure 26. Model 740 Menu Structure Diagram - Sheet 5

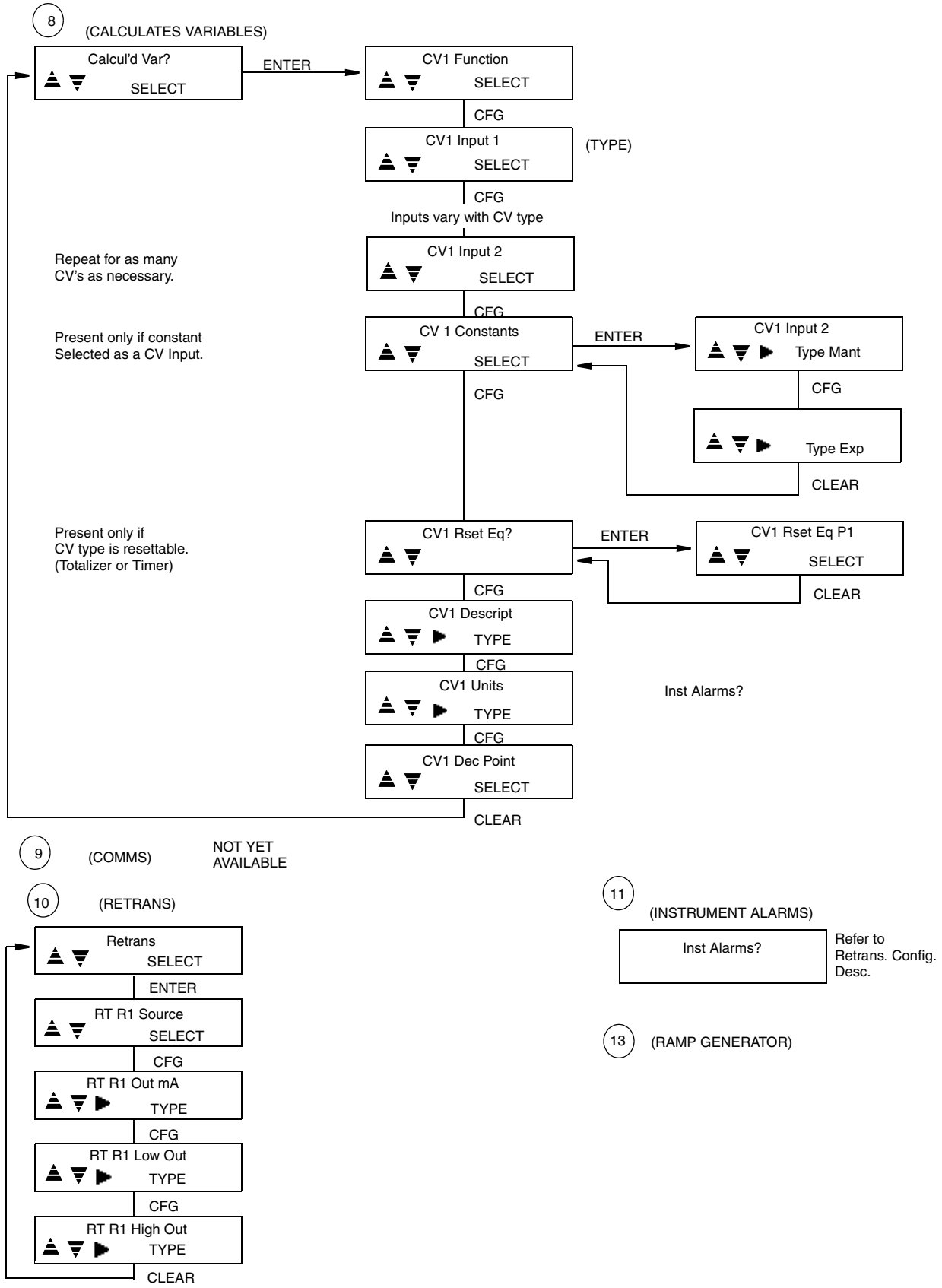

Figure 27. Model 740 Menu Structure Diagram - Sheet 6

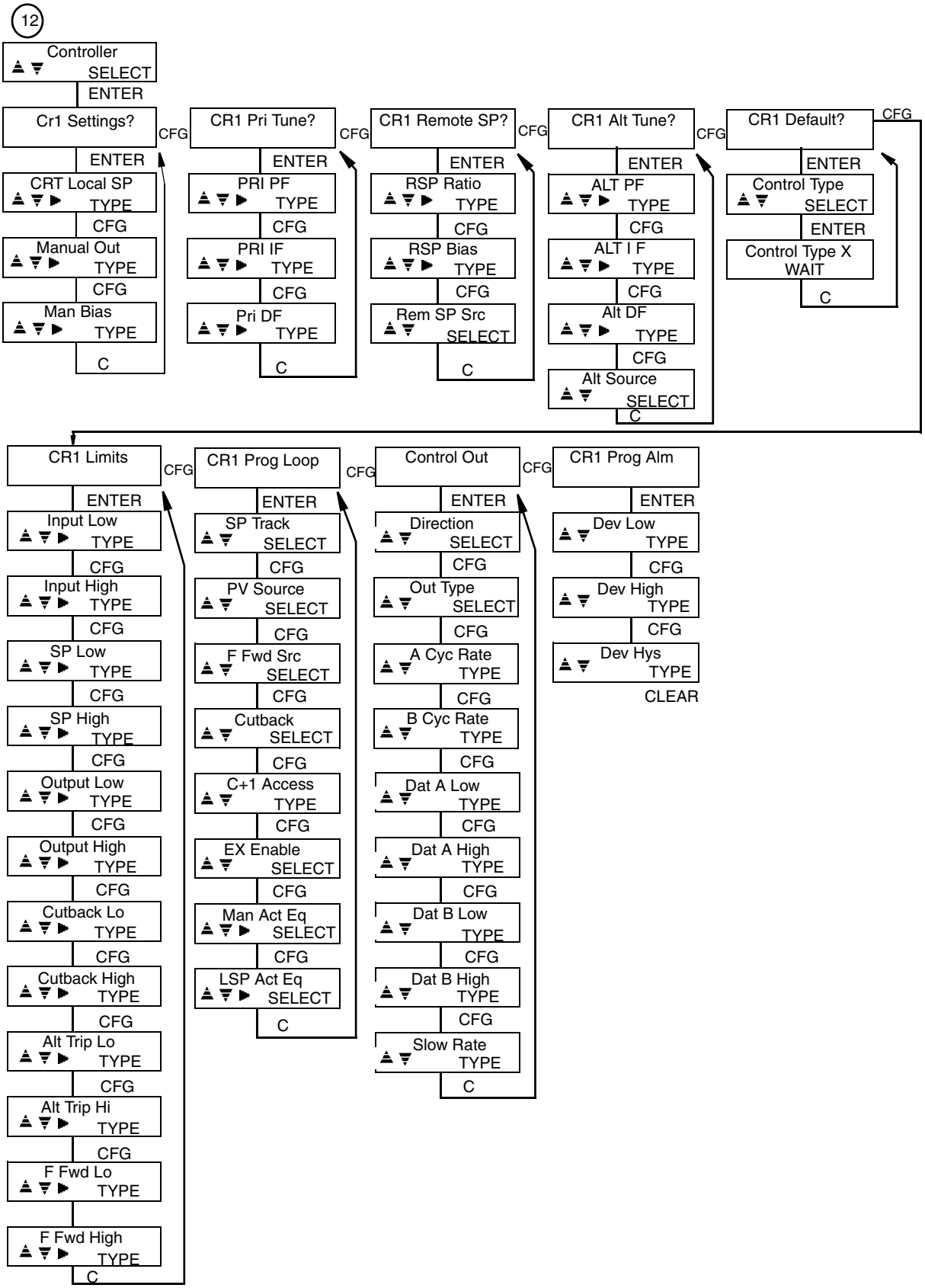

Figure 28. Model 740 Menu Structure Diagram - Sheet 7

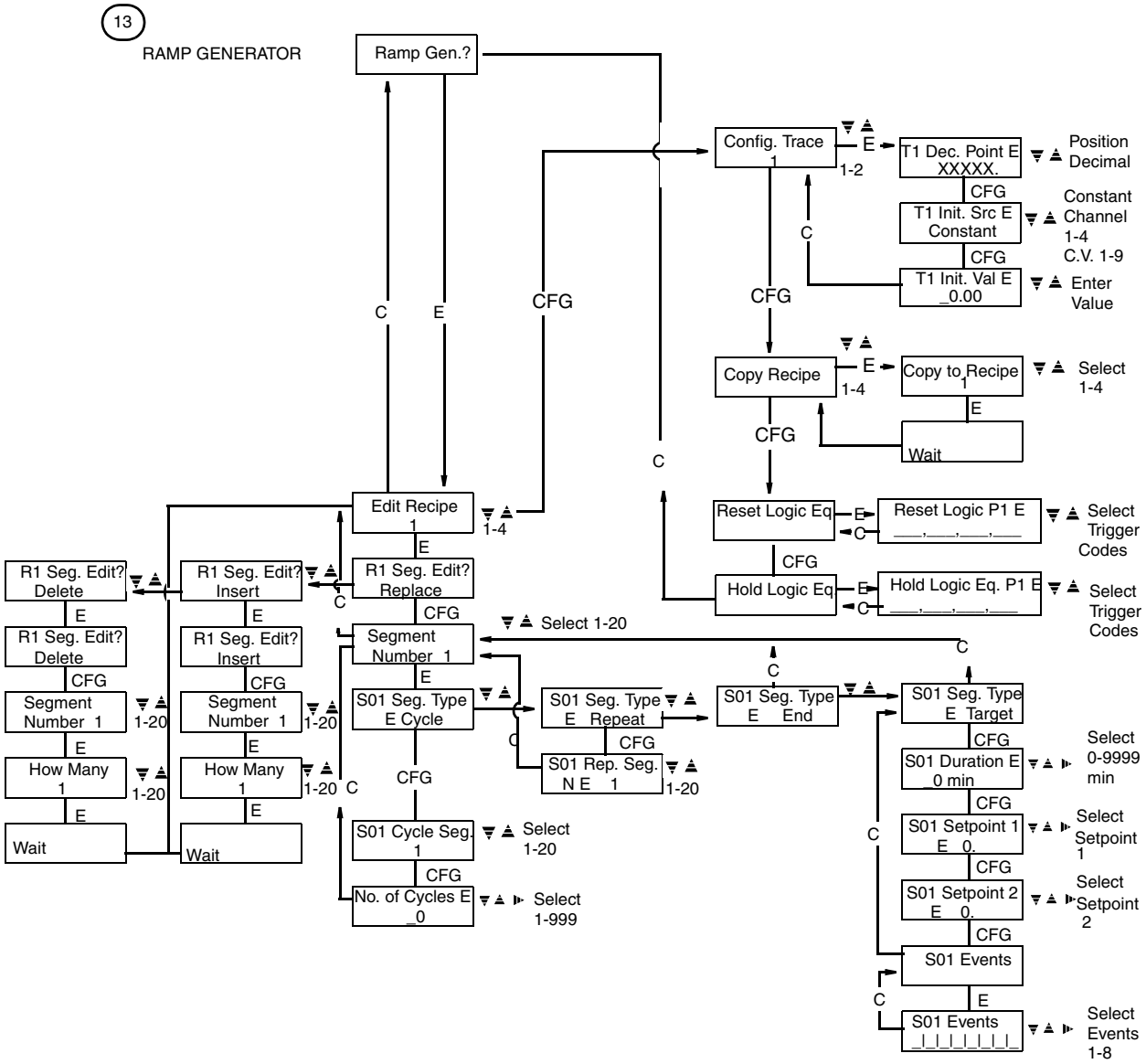

Figure 29. Model 740 Menu Structure Diagram - Sheet 8

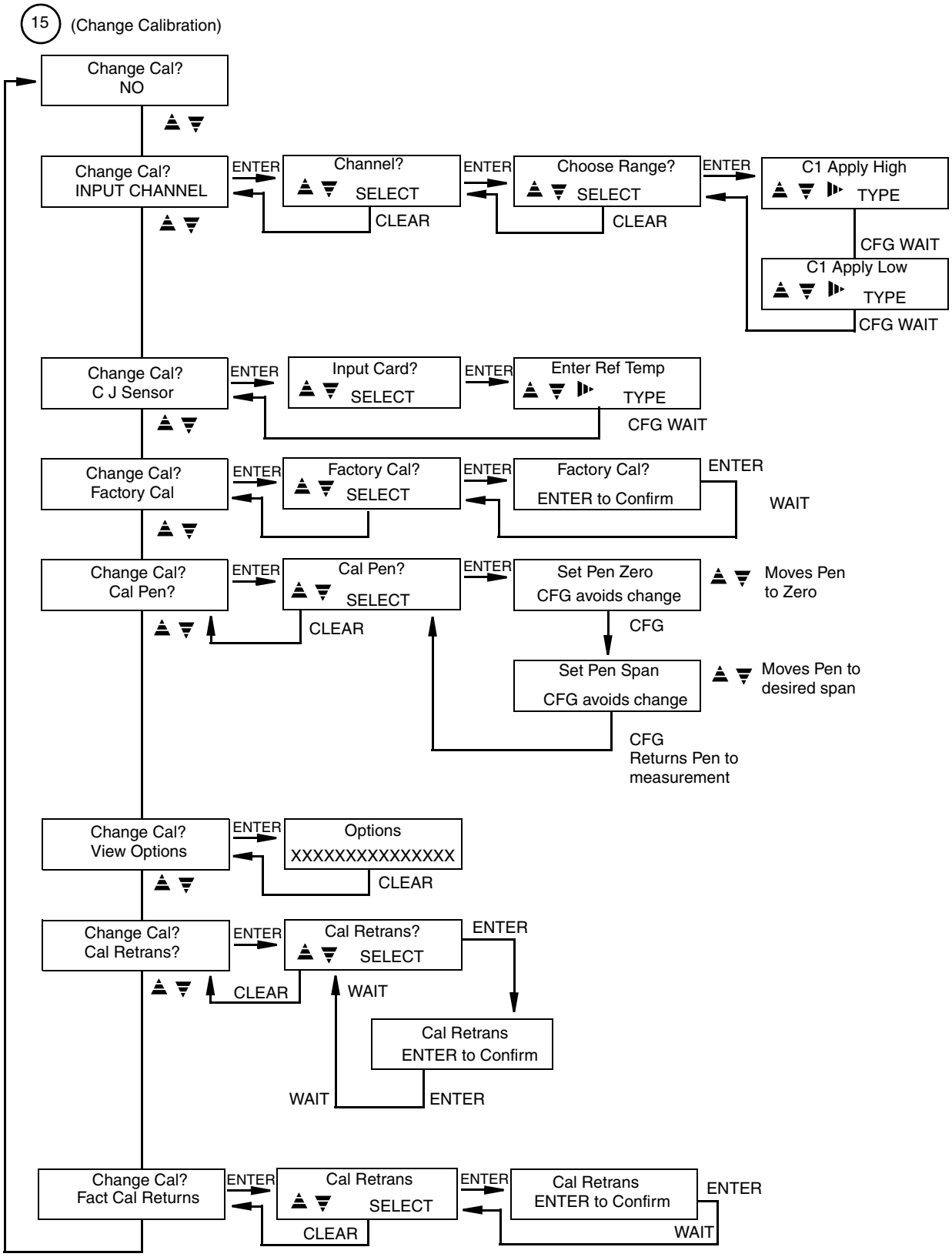

Figure 30. Model 740 Menu Structure Diagram - Sheet 9

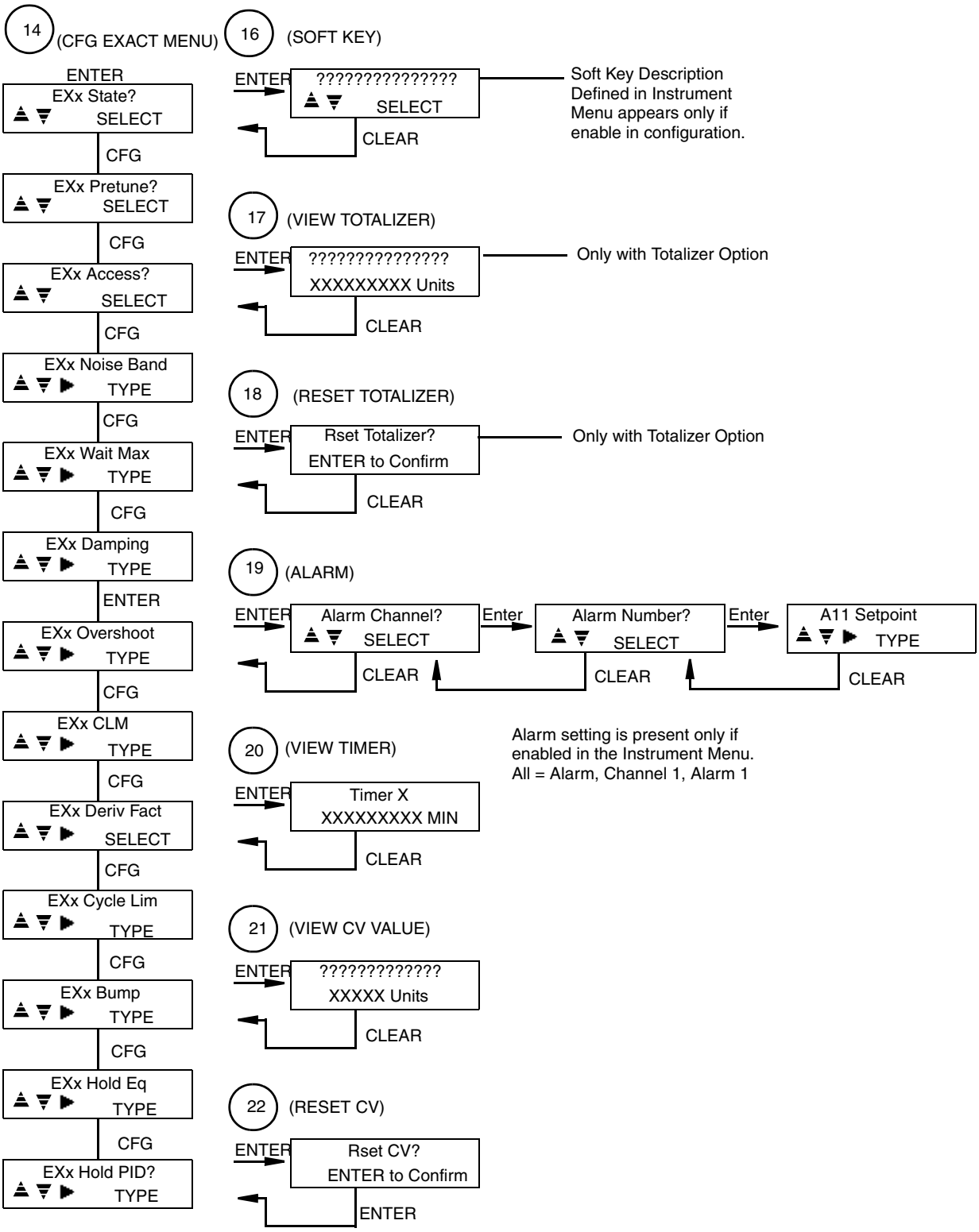

Figure 31. Model 740 Menu Structure Diagram - Sheet 10

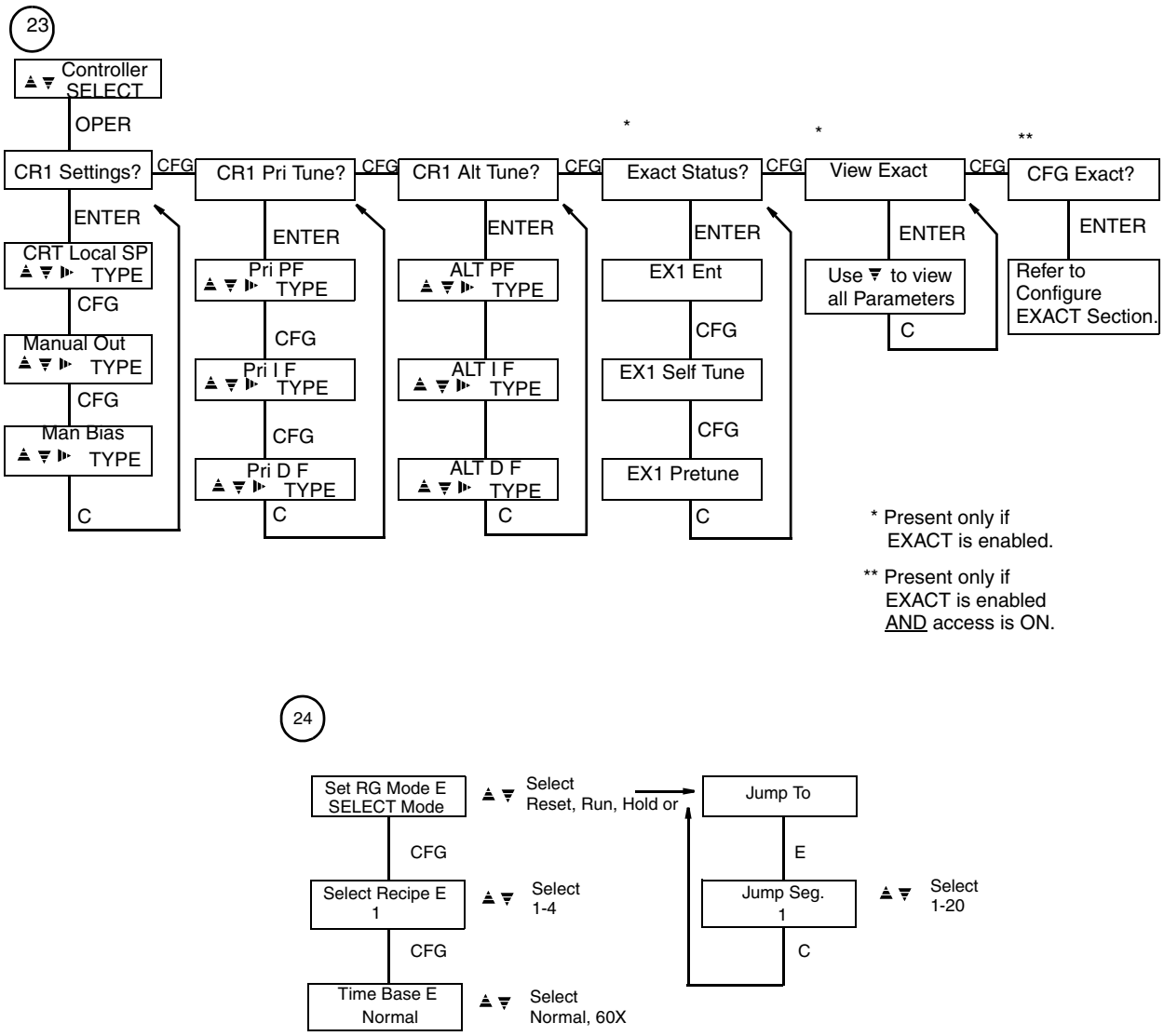

Figure 32. Model 740 Menu Structure Diagram - Sheet 11

Run Mode

To make this instrument function in the RUN Mode, proceed as follows.

For the first start or a restart in the RUN Mode, follow this procedure:

Apply Power		See: Instrument warms up and performs self diagnostics	Initializing
Wait 30 Seconds		See: Display scrolls automatically every 10 seconds	CHANNEL 1 Ch1 100.00 °F
Push	STOP CYCLE ENTER	Key: Holds (Stop Cycle) the current display indefinitely	CHANNEL 1 Ch1 100.00 °F
Push	▲ ▼	Key: To return to autoscroll or manually scroll	CHANNEL 2 Ch2 100.00 °F

The 740 automatically performs in the RUN Mode after power is applied. If the instrument has not been reconfigured, it will operate in accordance with the factory default parameters. See Configuration Procedures on page 61 for factory defaults and customer log.

To enter your own parameters, refer to Configure Mode on page 61 of this instruction.

With the 740R Recorder in the RUN Mode, the pens continuously record the assigned channels while the display exhibits (every 10 seconds) the measurements for all channels configured, plus any (if applicable) calculated variable, totalizer, ramp generator, or alarm condition that may be present. Alarm symbols appear only if an alarm condition is active. For Alarm symbols, see the section on Alarm Symbols on page 93 of Configure Mode.

With the 740C Controller in the RUN Mode, the instrument functions the same as the 740R Recorder except that the control displays are added and alternate with the channel displays.

Operator Mode

Recording Functions

The OPERATOR MODE for recorder functions is where an operator may enable, change, or reset some configured items. Entering the Operator Mode *for recording functions* is accomplished by pressing the **OPER** Key while in any *Channel or Totalizer* display.

The operator may change, reset, or enable the following (also see Figure 22):

- SOFT KEY: Soft Key is the term used for an operator function that acts as a manual trigger for action equations (see "Action Equations and Internal Triggers" on page 179). It is available to the operator only if the feature is enabled during configuration.
- VIEW TOTALIZER: available only with optional totalizer
- RESET TOTALIZER: available only with optional totalizer
- CHART HOLD: used to stop chart motor for chart changes
- PEN PARK: used to stop and separate pens for pen replacement
- ALARM: (available only if access is set to ON during configuration) a means of changing alarm settings
- VIEW TIMER
- ALTERNATE CHART SPEED: allows the alternate chart speed (previously configured) to be turned ON or OFF
- VIEW CALCULATED VARIABLE VALUES: only with "CV" option
- RESET CALCULATED VARIABLE VALUES: only with "CV" option
- VIEW INSTRUMENT ALARM: only appears if instrument alarm is active

Follow the step-by-step procedures to utilize the OPERATOR MODE. If an option was not purchased, it will not appear on the display (therefore skip to the next step). If an option was purchased, but not enabled (made accessible) to the operator during configuration, it will not appear on the display (therefore skip to the next step). For example, if the "Soft Key" function is not enabled in the CONFIGURE Mode, and the totalizer option was not purchased, then the first display the operator will see is "Chart Hold."

The menu sequence must always be followed in a forward direction from one topic to the next; the display will not back up. If at the end of any procedure you wish to return to the "RUN" Mode, Push "**C**."

Any time "**E**" appears in the upper right-hand corner of the display, the **ENTER** key or the "**C**" key must be pushed in order to continue. "**ENTER**" will store the modified parameter as displayed on the screen. "**C**" will return the parameter to its originally displayed value.

To quickly move to a desired menu without proceeding through each individual menu, push "**OPER**" and successively push "**CFG**" until the desired menu function is reached.

EXAMPLE To stop the chart drive before changing a chart:
push **OPER**, push **CFG** until "Chart Hold" is displayed,
push ▲, see "on E" displayed, push **ENTER** and "on"
is displayed (chart hold on = chart drive off).
Push **C** to return to the RUN Mode.

Turn SOFT KEY On or Off

This display does not appear if not configured.

Push	**OPER**	See:	Soft Key?
Push	**ENTER**	See:	SOFT KEY Off
Push	▲▼	Select: On or Off	SOFT KEY E Your Selection
Push	**ENTER**	See:	SOFT KEY Your Selection
Push	**C**	See:	Soft Key?

View Totalizer Readings

Only with optional totalizer.

Push	**CFG**	See:	View Total.? 1
Push	▲▼	Select: Totalizer number desired	
Push	**ENTER**	View: Only the totalizer selected	Totalizer 1 0 UNITS
Push	**ENTER**	See:	View Total.? 1

Reset Totalizer Readings

Only with optional totalizer.

Push	**CFG**	See:	Rset Total.? 1
Push	▲▼	Select: Number of totalizer desired	
Push	**ENTER**	View: Only the totalizer selected If this function is not configured as resettable, the display reads "NOT RESETTABLE"	Rset Total.? ENTER to confirm
Push	**ENTER**	See:	Rset Total.? 1

Stop Chart Motor for Chart Change

Push	**CFG**	See:	Chart Hold Off
Push	▲▼	This action toggles on/off, "ON" stops chart	
Push	**ENTER**	To confirm your selection	
	Repeat to change back to original selection		

To Position (Park) and Spread Pens for Replacement

Push	**CFG**		Pen Park Off
Push	▲▼	This action toggles on/off, "ON" parks pens	
Push	**ENTER**	To confirm your selection	
	Repeat to change back to original selection		

To Change Alarm Setpoints

Only if enabled in configuration.

Push	**CFG**	See:	Alarm?
Push	**ENTER**	See:	Alarm Channel? 1
Push	▲▼	Select: Channel 1, 2, 3, 4, 5*, or 6* *Only with -B option (Calculated Variable)	Alarm Channel? Your Selection
Push	**ENTER**	See:	Alarm Number? 1
Push	▲▼	Select: Alarm Number 1,2,3, or 4	Alarm Number? Your Selection
Push	**ENTER**	See: If alarm is off, this display reads "this Alarm Off." Previous setpoint or setpoint from CONFIGURATION (if alarm is on). Note that All - Alarm, Channel 1, Alarm 1; Not the word ALL. An alarm can only be turned on from within the passcode protected configuration area.	All Setpoint Previous Selection
Push	▲ ▼ **or** ▶	Select: New Setpoint	All Setpoint E Your Selection
Push	**ENTER**	See:	All Setpoint Your Selection
Push	**C**	See: Repeat above for different Alarm	Alarm Number? 1
Push	**C**	See: Repeat above for different Channel	Alarm Channel? 1
Push	**C**	See: Returns to top level menu	Alarm?

To View Timer

Push	**CFG**		View Timer? 1
Push	▲▼	Select: Number of timer desired	
Push	**ENTER**	View: Only the timer selected	Timer 1 /min
Push	**C**		View Timer? 1

To Select the Alternate Chart Speed

Push	**CFG**	See:	Alt. Chart Spd Off
Push	▲▼	This action toggles on/off, "ON" for Alt, Cht. Sp.	
Push	**ENTER**	To confirm your selection	
	Repeat to change back to original selection		

To View Calculated Variable Values

Only if option purchased.

Push	**CFG**	See:	View CV Val? 1
Push	▲▼	Select: CV 1, 2, 3, 4, 5, 6, 7, 8, or 9	View CV Val? Your Selection
Push	**ENTER**	See:	Calculated Var. 1 0.0 UNITS
Push	**C**	See:	View CV Val? 1
	Repeat for balance of Calculated Variables		

To Reset Calculated Variables

Push	**CFG**	See:	Rset CV? 1
Push	▲▼	Select: CV 1, 2, 3, 4, 5, 6, 7, 8, or 9	Rset CV? Your Selection
Push	**ENTER**	See:	Rset CV? ENTER to confirm
Push	**ENTER**	See:	Rset CV? 1
	Repeat for any other CVs to be reset.		

View Instrument Alarm

If the Recorder should ever malfunction, an "I" appears in the lower right-hand corner of the display. This indicates a potential problem with the instrument that is either a bad ROM or lost data. In either case, the instrument may need to be serviced. For a complete list of errors and more detail, see the configuration section ("Instrument Alarms" on page 118) of this document. This display appears only on alarm.

Push	**CFG**	See:	Inst. Alarms?
Push	**ENTER**	See:	ROM Bad
Push	**ENTER**	See:	ROM Bad ENTER to confirm
Push	**ENTER**	See:	Inst. Alarms?
Push	**C**	This action returns instrument to the RUN Mode.	

NOTE: When the main PWA or main PWA firmware is upgraded (i.e., certain options are added), the Instrument Alarm will read "Lost Data." This means that the instrument has reset to default values and must be reconfigured. The user must push ***ENTER*** *to confirm, then reconfigure the instrument.*

Controller Functions Without EXACT

The OPERATOR MODE for controller functions is where an operator may view or change certain configured items. Entering the Operator Mode for controller functions is accomplished by pressing the **OPER** Key while either in the Controller 1 or Controller 2 display. *Pressing **OPER** while in Controller 1 or 2 enters menus specific to that controller.*

The operator may view or change the following (also see Figure 22):

- Local Setpoint
- Manual Output
- Manual Bias
- Primary or Alternate Proportional Value
- Primary or Alternate Integral Value
- Primary or Alternate Derivative Value

Follow the step-by-step procedures to utilize the OPERATOR MODE. If a controller was not purchased, it will not appear on the display. If a controller was purchased, but not enabled (made accessible) to the operator during configuration, it will not appear on the display.

The menu sequence must always be followed in a forward direction from one topic to the next; the display will not back up. If at the end of any procedure you wish to return to the "RUN" Mode, push "**C**" one or more times.

Any time "**E**" appears in the upper right-hand corner of the display, the "**ENTER**" key or the "**C**" key must be pushed in order to continue. "**ENTER**" stores the modified parameter as displayed on the screen. "**C**" returns the parameter to its originally displayed value.

To quickly move to a desired menu without proceeding through each individual menu, push "**OPER**", then successively push "**CFG**" until the desired menu function is reached.

Push **OPER** while in the Controller 1 (CR1) or 2 (CR2) display, and see **CR1 Settings?.**

To View or change the local setpoints

Push	**ENTER**	See:	CR1 Local SP _0.0000 °F
Push	▲ ▼ **or** ▶	Type: Value for local setpoint	CR1 Local SP E Your Value
Push	**ENTER**	See:	CR1 Local SP Our Value

To View or change manual output

Push	**CFG**	See:	CR1 Manual Out _0.0%
Push	▲ ▼ **or** ▶	Type: Value for manual output	CR1 Manual Out E Your Selection
Push	**ENTER**	See:	CR1 Manual Out Your Selection

To View or change manual bias

Push	**CFG**	See:	CR1 Man Bias _0.0%
Push	▲ ▼ **or** ▶	Type: Value for manual bias (0 to 999999999)	CR1 Man Bias E Your Selection
Push	**ENTER**	See:	CR1 Man Bias Your Selection
Push	**C**	To return to “Settings”	

Push “**CFG**”, see primary tuning parameters “**CR1 Pri. Tune?**”

To View or change the primary proportional value

Push	**ENTER**	See:	CR1 Pri PF _100.0%
Push	▲ ▼ **or** ▶	Type: Value for Proportional Band (0.1 to 2000)	CR1 Pri PF E Your Value
Push	**ENTER**	See:	CR1 Pri PF Our Value

To View or change primary integral value

Push	**CFG**	See:	CR1 Pri IF _1.00 min
Push	▲ ▼ **or** ▶	Type: Value for Integral (0.01 to 999.90)	CR1 Pri IF E Your Selection
Push	**ENTER**	See:	CR1 Pri IF Your Selection

To View or change primary derivative value

Push	**CFG**	See:	CR1 Pri DF _0.00 min
Push	▲ ▼ **or** ▶	Type: Value for local setpoint	CR1 Pri DF E Your Selection
Push	**ENTER**	See:	CR1 Pri DF Your Selection
Push	**C**	To return to "**Primary Tuning**"	

Push "**CFG**", see alternate tuning parameters "**CR1 Alt. Tune?**"

To View or change the alternate proportional value

Push	**ENTER**	See:	CR1 Alt PF _100.0%
Push	▲ ▼ **or** ▶	Type: Value for Proportional Band (0.1 to 2000)	CR1 Alt PF E Your Value
Push	**ENTER**	See:	CR1 Alt PF Our Value

To View or change alternate integral value

Push	**CFG**	See:	CR1 Alt IF _1.00 min
Push	▲ ▼ **or** ▶	Type: Value for Integral (0.01 to 999.90)	CR1 Alt IF E Your Selection
Push	**ENTER**	See:	CR1 Alt IF Your Selection

To View or change alternate derivative value

Push	**CFG**	See:	CR1 Alt DF _0.00 min
Push	▲ ▼ **or** ▶	Type: Value for local setpoint	CR1 Alt DF E Your Selection
Push	**ENTER**	See:	CR1 Alt DF Your Selection
Push	**C**	To return to "**Alternate Tuning**"	

Controller Functions with EXACT Tuning

The OPERATOR MODE for controllers with the EXACT Tuning option is where an operator may view or change certain configured items pertaining to EXACT Tuning functions. All controller functions discussed in "Controller Functions Without EXACT" on page 47 are applicable here also. This section adds the information necessary for performing EXACT Tuning functions. Entering the Operator Mode for controller functions is accomplished by

pressing the **OPER** Key while either in the Controller 1 or Controller 2 display. Pressing **OPER** while in Controller 1 or 2 enters menus specific to that controller. EXACT in Controller 1 is referred to as EXACT 1, and in Controller 2 it is EXACT 2.

The operator may view or change the following (also see Figure 22):

- Status (View only the messages tracking the status of the EXACT function)
- View EXACT Tuning Parameters (View only)
- Cfg EXACT Tuning Parameters (Change parameters, present only if access is ON)

Follow the step-by-step procedures to utilize the OPERATOR MODE. If EXACT was not purchased, it will not appear on the display. If EXACT was purchased, but not enabled (from within the controller prog. loop MENU) during configuration, it will not appear on the display.

If EXACT was purchased and enabled, the EXACT view only items will appear in the operator menu. Additionally, if EXACT access is set to ON, the "CFG EXACT" Menu (which allows EXACT parameters to be changed) appears in the operator menu.

The menu sequence must always be followed in a forward direction from one topic to the next; the display will not back up. If at the end of any procedure you wish to return to the "RUN" Mode, Push "**C**."

Any time "**E**" appears in the upper right-hand corner of the display, the **ENTER** key or the "**C**" key must be pushed in order to continue. "**ENTER**" stores the modified parameter as displayed on the screen. "**C**" returns the parameter to its originally displayed value.

To quickly move to a desired menu without proceeding through each individual menu, push "**OPER**" and successively push "**CFG**" until the desired menu function is reached.

The EXACT operator menus appear in the controller menu sequence right after the controller operator menu items. Push "**CFG**" and see "**EXACT1 Status?**".

Push "**CFG**", see EXACT Status parameters "**EXACT1 (for CR1) Status?**".

To View EXACT Status messages

Push	**ENTER**	See: Status of existing Entries Controller Config. Procedure on page 127 defines messages	EX1 Ent EXACT Alg. Init.
Push	**CFG**	See: Status message for Self Tune Controller Config. Procedure on page 127 defines messages	EX1 Self Tune Off
Push	**CFG**	See: Status message for Pretuning Controller Config. Procedure on page 127 defines messages	EX1 Pretune Off
Push	**C**	To return to "**EXACT Status.**"	

The list below gives the specific status messages found in each of the three EXACT Status menus. The EXACT configuration section (“Controller Configuration Procedure (740C Only)” on page 123) defines all of the possible messages. Only one message is displayed for each status at any given time

EXACT Status Messages

EXx Ent	EXx Selftune	EXx Pretune
1 Peak	Quiet	Off
2 Peaks Found	Locate Peak 1	Transfer to Manual
3 Peaks Found	Locate Peak 2	Small Change 1
Error Overdamped	Locate Peak 3	Waiting SS 2
Error Suspect	Verify Peak 1	New PID Calc 3
WMAX Error	Verify Peak 2	Noise Band 4
SP Change	Verify Peak 3	Pretune Finished
Out of Range	Adapt PID	Wrong Out Action
P and I Clamped	Settling	Small Noise Band
EXACT Alg. Init.	In Manual	Invalid EX CFG
Invalid EX CFG	Inactive	
	Off	

To continue on to the next menu, Push “**CFG**” and see “**View EXACT1 ?**”.

To View all EXACT configuration parameters

Push	**ENTER**	See: The beginning of the list of all configuration parameters	EX1 State Off
Push	▼	See: Next item on the configuration list, use ▼ to continue down the list of parameter settings The list below identifies all the viewable parameters	EX1 Pretune Off
Push	**C**	At any time to return to “**View EXACT1?**”.	

View Only Parameters

State	Damping	PK1
Pretune	Overshoot	PK2
Hold	CLM	PK3
Hold PID	Derivative Factor	TPK1
Active P	Cycle Limit	TPK2
Active I	Bump	TPK3
Active D	PF	ERR
Noise Band	IF	
Wait Max.	DF	

Some of these parameters may be changed by the operator in "CFG EXACT" if access is turned on to the operator within the configuration menu.

Push "**CFG**", see "**CFG EXACT ?**" (if access is turned ON).

To change some of the EXACT Parameters

Push	**ENTER**	See:	EX1 State? On
Push	▲ ▼	Select: On or Off	EX1 State E Your Selection
Push	**ENTER**	To change any of the configurable EXACT Parameters, follow the same procedures as in Exact Tuning Procedures on page 177	EX1State Your Selection

Ramp Generator Functions

The Operator Mode for Ramp Generator Functions is where an operator may view, start, stop, or speed up a pre-established recipe. Entering the Operator Mode for Ramp Generator Functions is accomplished by pressing the **OPER** key while in the Ramp Generator Display.

The operator must be aware of the Ramp Recipe, Segment Types, and Ramp Functions. For that reason, an operator must refer to the Ramp Generator Configuration Worksheet whenever ramp functions are being performed. See sample worksheet.

The operator may view or initiate the following actions:

- Select the recipe to be run
- Run a recipe
- Hold a recipe
- Reset a recipe
- Jump from one segment of a recipe to another
- Speed up recipe time (testing purpose only)

General

The purpose of a ramp generator (RG) is to force a preprogrammed chain of events using time versus selected values (see Figure 33, Time/Temperature used as an example). The 740 ramp generator option provides an electronic substitute for mechanical cam set instruments that performed the ramp function. This ramp generator furnishes two output traces (the equivalent of cam followers), one timer that is common to both traces, and eight on/off event states (the equivalent of cam tabs). Output of the trace is through the retransmission option. Output of the event states is through the relay option. The ramp generator may, however, be used without any physical output wiring, either as a remote setpoint or as an input to a calculated variable. Pen assignment, if desired, is done through the retransmission output plus wiring the retransmission output to the desired channel input or completed via CV to Channel 5 or 6.

The ramp generator was configured by creating a recipe (program). A recipe is a sequential group of segments (see the Ramp Generator Configuration Worksheet). Segments are the specific portions of the preprogrammed chain of events where segment types are assigned. There are four segment types to choose from, each defining specific functions. Up to 20 segments may be used for a recipe. Up to four recipes may be written per 740.

Ramp Generator Configuration Worksheet

Initial Conditions

Trace 1 Decimal Point X X X X X
Trace 1 Initial Source _____
Trace 1 Initial Value _____
Trace 2 Decimal Point X X X X X
Trace 2 Initial Source _____
Trace 2 Initial Value _____

Recipe No. _____

Recipe Name _____

Total Run Time _____

Recipe Segments

			Target Segments				Repeats	Cycle Segments	
Segment No.	Trace No.	Segment Type	Starts From	Target Value	Segment Duration	Events On/Off	Repeat to Segment	Cycle to Segment	Cycle Repeats
1	1								
	2								
2	1								
	2								
3	1								
	2								
4	1								
	2								
5	1								
	2								
6	1								
	2								
7	1								
	2								
8	1								
	2								
9	1								
	2								
10	1								
	2								
11	1								
	2								
12	1								
	2								
13	1								
	2								
14	1								
	2								
15	1								
	2								
16	1								
	2								
17	1								
	2								
18	1								
	2								
19	1								
	2								
20	1								
	2								

Segment Types: Target, Repeat, Cycle, End.

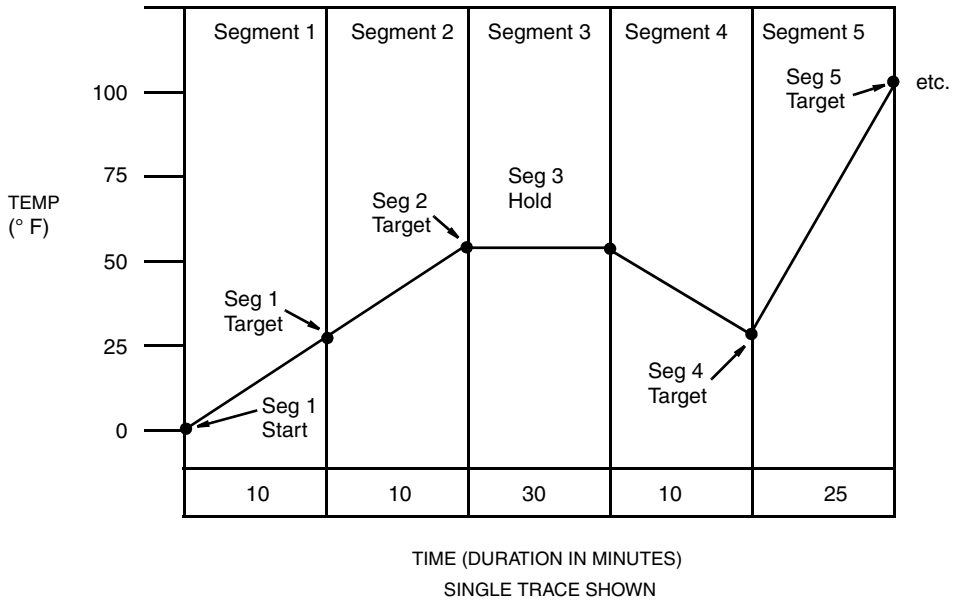

Figure 33. Time/Temperature Ramp

Ramp Generator Terminology

Segment Types

Target Segments

A Target Segment consists of a Target Value (in the same units as the Process Value for the Control Loop) for each Trace, a Duration for the Segment, and the on/off status of each of the eight events for that segment. The Target Value is the value that the Segment achieves by the end of the Duration.

Target Segments can have Durations from 0 to 9999 minutes. For a Ramp longer than 9999 minutes (166 hours), use multiple segments and calculate the intermediate Target Value. Zero Duration Segments are used to change event outputs and for step changes.

NOTE: RG Events can be assigned as Triggers for recorder Output Relay Action Equations.

Cycle Segments

A Cycle Segment is placed at a point in the recipe where it is desired to repeat a portion of that recipe. These segments contain a No. of Cycles count and a destination Cycle Segment number. Cycles can be defined from 1 to 999 repeats. If more cycles are needed, a second Cycle Segment can be placed in series. A cycle must always be done backwards (to a Segment number less than the Cycle Segment). Cycles can also be nested, up to five deep. If a cycle were defined from Segment 10 back to Segment 2, a nested cycle from Segment 8 back to Segment 4 would repeat its full count each time the outer cycle repeated.

End Segment

Each Recipe ends with either an End or a Repeat Segment. The End Segment determines that the recipe will stop (displaying the message “done”).

Repeat Segment

If Repeat Segment is chosen, the Recipe will start over at the defined Segment number. The difference between a Cycle Segment and a Repeat Segment is that a Cycle Segment occurs in the middle of the recipe and the Repeat Segment is at the end of the recipe. A Repeat Segment also resets the elapsed time counter.

Operator Functions

What happens during Run?

In the run mode, the RG starts as defined in the Main Menu and advances one segment at a time to the Stop or Repeat Segment at the end. Each Target Segment starts where the previous segment ended. Elapsed time is counted as the sum of all segments.

What happens during a Cycle?

An operator cannot choose a cycle; the information is put here to clarify what is happening within a recipe that contains a cycle segment. When a Cycle Segment is encountered (and the cycle count has not reached zero), both traces will go back immediately to the Target Segment number given in the Segment Type Menu. The Traces will then go to the value(s) of that Target Segment over the Segment's duration. Viewing Cycles as concentric loops, the innermost loop Cycle Segment will be reached first. The innermost Cycle will complete its configured number of loops before going on to the next loop.

What happens during a Jump?

It is possible to Jump forward or backward. A Jump can be to any numbered segment (up to, but not including the end segment). The Traces will go from their values at the time of the Jump to the Target Value of the “Jump to” Segment over the duration of the “Jump to” Segment. This action may be used to jump out of a repeat cycle.

Example:

> The RG is in Segment 9 with a current output value of 1000° F when the operator commands the Traces to Jump to Segment 14 (with a Target of 2000° F). The Traces will now ramp from 1000° F to 2000° F over the Segment 14 Duration.

What happens during a Hold?

The RG can be held by using the Hold Action Equation in the Main RG Menu or by using the front panel keys. When a Hold is placed on the RG, both Traces stop. The current output values are held and the events do not change. This action may be chosen to hold a repeat cycle.

What happens during the 60X speed change?

There is a test mode which speeds up the Traces. Durations configured in minutes will operate in seconds (even though the display still reads in minutes). Step changes (0 Durations) will take a finite time (1 or 2 seconds) that will be shown as minutes. 60X speed can only be used on a Reset Recipe before it is started.

What happens during Reset?

A Reset Recipe goes back to the single common set of initial conditions as defined in the Main RG Menu. All timing stops and is reset to zero. The Ramp Generator is left on "Hold." This action may be used to reset a repeat cycle.

Display

The Ramp Generator Display is only visible with the -G optional selection. It is actually a 2-display sequence. The first display exhibits Trace 1 and 2 Values, Alarms, Recipe and Segment Number, Time to Go, and Event Status. The second display (automatically scrolled 10 seconds after the first display) shows the Ramp State (Running, Holding, or Done), Alarms, and Elapsed Time since the timer was set. Figure 34 shows the two Ramp Generator displays.

Top Line	= Trace 1 and 2 values, process, instrument alarm	1 23.9 2 35.4 () () R1 19 60M 124
Bottom Line	= Recipe No., Segment No., time counting down to 0 (reads 0 for the last minutes, 1 for the next-to-the-last minutes, etc.) and Event Output status.	

Top Line	= Recipe Status (Running, Holding, or Done.	RUN () () 15M
Bottom Line	= Elapsed Time in minutes. Time reads 0 from 0-1 minute, 1 from 1-2 minutes, etc.	

Figure 34. Ramp Generator Display

Procedure

Press OPER while viewing the Ramp Generator Displays.

Push	**OPER**	See:	Set RG Mode Select Mode
Push	▲▼	Select: Reset, Run, Hold, or Jump To	Set RG Mode E Your Selection
Push	**ENTER**	See:	Set RG Mode Your Selection
Push	▲▼	Select: Segment 1-20 only if Jump To was selected	Jump Seg. E 1
Push	**ENTER**	See:	Jump Seg. Your Selection
Push	**C**	See: Push C only if using Jump	Jump Seg. 1

To Select Recipe Numbers.

Push	**CFG**	See:	Select Recipe 1
Push	▲▼	Select: 1-4	Select Recipe E Your Selection
Push	**ENTER**	See:	Select Recipe Your Selection

To Select Time Bases.

Push	**CFG**	See:	Time Base Normal
Push	▲▼	Select: Normal, 60X	Time Base E Your Selection
Push	**ENTER**	See:	Time Base Your Selection

Configure Mode

Overview

740s are shipped with factory configured settings (default values) for all parameters. Configuration is the keypad manipulation of some parameters to make the instrument function to the user's specifications. Configuration is accomplished by assigning process specific values (via key strokes) in place of the default values viewed on the display. Parameters are grouped into families and presented in a menu structure. The Configuration Worksheets show all the menu structures, list the configurable parameters and their default values, and provide spaces to write your settings.

This section explains how to input and change specific data from the default values to your values through the keypad.

NOTES:

1. Because reconfiguration may also involve wiring or jumper changes, care must be taken to ensure that they are also checked before the instrument is placed into service either at start-up or after any sensor changes are made.

2. This instrument also includes a Configuration Lockout switch. The switch provides an additional level of security above the password for keeping unauthorized personnel from entering the CONFIGURE Mode. The switch has two positions (ON/OFF) and is mounted on the back side of the platen near the ribbon cable. When the switch is ON (switch towards platen hinge), and someone tries to enter the configuration mode by pushing the ***CFG*** *key, the digital display reads "Config. Lockout", and access to the CONFIGURE Mode is denied.*

3. Do not ***ENTER*** *any values above or below listed limits. The instrument will not accept a value higher or lower than the limit. It will, however, display the higher or lower value until entered; then the instrument will default to the highest listed value.*

Configuration Procedures

The step-by-step procedures presented in the configuration procedures section, Figure 35, are intended to lead the first time user through all menu structures. Figure 22 through Figure 32 are intended for use as a road map for the practiced user.

Successful configuration requires four simple steps:

- Write down all your parameter values in the spaces provided in the configuration worksheets.
- Unlock the instrument by using the password.
- Enter your parameter values.
- Press "CLEAR" one or more times to return to the RUN Mode.

The RUN Mode is the starting place for all configuration procedures (see Figure 35). Push the CFG (Configure) Key to enter the CONFIGURE Mode. Once the CONFIGURE Mode is entered, there are multiple choices to be made depending on the options you have purchased. This instruction covers *all* possibilities, ignore menus that represent options not purchased. Options not purchased do not have a menu display.

Configuration Worksheets

Channel Menu	Factory Setting (Default)	User Settings Ch 1	Ch 2	Ch 3	Ch 4	Ch 5	Ch 6
Channel	1	_____	_____	_____	_____	_____	_____
Function	Linear	_____	_____	_____	_____	_____	_____
Units	Prog. Units	_____	_____	_____	_____	_____	_____
Decimal Point	XXX.XX	_____	_____	_____	_____	_____	_____
Prog Units	UNITS	_____	_____	_____	_____	_____	_____
Input Type	Volts	_____	_____	_____	_____	_____	_____
Range Low	_0.00 UNITS	_____	_____	_____	_____	_____	_____
Range High	_100.00 UNITS	_____	_____	_____	_____	_____	_____
Input Low	_1 V	_____	_____	_____	_____	_____	_____
Input High	_5 V	_____	_____	_____	_____	_____	_____
Chart Low	_0.00 UNITS	_____	_____	_____	_____	_____	_____
Chart High	_100.00 UNITS	_____	_____	_____	_____	_____	_____
Filter Time	1 second	_____	_____	_____	_____	_____	_____
Description	CHANNEL	_____	_____	_____	_____	_____	_____
Ch. Adjust	_0.00 UNITS	_____	_____	_____	_____	_____	_____

Instrument Menu	Factory Setting (Default)	User Settings: These settings are common to all channels	
Pri. Cht. Sd.	_24 HR/RV	_____	
Alt. Cht. Sd.	_24 HR/RV	_____	
Alt. Sd. Trg.	None	_____	
Cht. Hd. Trg.	None	_____	
Sft Key Enab.	No	_____	
Sft Key Desc.	SOFT KEY	_____	
Password	_10	_____	
Alarm Access	Off	_____	
Custom Curve	Off	_____	Optional Feature (-B)
Ext. CJC	_0.0 °C	_____	
Global Alarm	Flashing	_____	

Alarm Menu	Factory Setting (Default)	User Settings Ch 1	Ch 2	Ch 3	Ch 4	Ch 5	Ch 6
Alarm Channel	1	_____	_____	_____	_____	_____	_____
Alarm Number	1	_____	_____	_____	_____	_____	_____
Alarm Number	2	_____	_____	_____	_____	_____	_____
Alarm Number	3	_____	_____	_____	_____	_____	_____
Alarm Number	4	_____	_____	_____	_____	_____	_____
Alarm Type/A1	Off	_____	_____	_____	_____	_____	_____
Alarm Type/A2	Off	_____	_____	_____	_____	_____	_____
Alarm Type/A3	Off	_____	_____	_____	_____	_____	_____
Alarm Type/A4	Off	_____	_____	_____	_____	_____	_____
Setpoint/A1	0.00 UNITS	_____	_____	_____	_____	_____	_____
Setpoint/A2	0.00 UNITS	_____	_____	_____	_____	_____	_____
Setpoint/A3	0.00 UNITS	_____	_____	_____	_____	_____	_____
Setpoint/A4	0.00 UNITS	_____	_____	_____	_____	_____	_____
Hysteresis/A1	0.00 UNITS	_____	_____	_____	_____	_____	_____
Hysteresis/A2	0.00 UNITS	_____	_____	_____	_____	_____	_____
Hysteresis/A3	0.00 UNITS	_____	_____	_____	_____	_____	_____
Hysteresis/A4	0.00 UNITS	_____	_____	_____	_____	_____	_____
Deadband/A1	0.00 UNITS	_____	_____	_____	_____	_____	_____
Deadband/A2	0.00 UNITS	_____	_____	_____	_____	_____	_____
Deadband/A3	0.00 UNITS	_____	_____	_____	_____	_____	_____
Deadband/A4	0.00 UNITS	_____	_____	_____	_____	_____	_____
Rate Base/A1	/Hour	_____	_____	_____	_____	_____	_____
Rate Base/A2	/Hour	_____	_____	_____	_____	_____	_____
Rate Base/A3	/Hour	_____	_____	_____	_____	_____	_____
Rate Base/A4	/Hour	_____	_____	_____	_____	_____	_____

Timer Menu	Factory Setting (Default)	User Settings
Timer 1 Type	Off	_____
Timer 2 Type	Off	_____
Timer 3 Type	Off	_____

Timer Menu	Factory Setting (Default)	User Settings
Timer 4 Type	Off	_____
Timer 1 Dur.	_0 min	_____
Timer 2 Dur.	_0 min	_____
Timer 3 Dur.	_0 min	_____
Timer 4 Dur.	_0 min	_____
Timer 1 Trig.	None	_____
Timer 2 Trig.	None	_____
Timer 3 Trig.	None	_____
Timer 4 Trig.	None	_____

Relay Menu (Option Q,R, S, or T)	Factory Setting (Default)	User Settings
Relay 1 Type	Act Eq Output	_____
Relay 2 Type	Act Eq Output	_____
Relay 3 Type	Act Eq Output	_____
Relay 4 Type	Act Eq Output	_____
Relay 5 Type	Act Eq Output	_____
Relay 6 Type	Act Eq Output	_____
Relay 7 Type	Act Eq Output	_____
Relay 8 Type	Act Eq Output	_____
Relay 1 Source	Tot.1	_____
Relay 2 Source	Tot.1	_____
Relay 3 Source	Tot.1	_____
Relay 4 Source	Tot.1	_____
Relay 5 Source	Tot.1	_____
Relay 6 Source	Tot.1	_____
Relay 7 Source	Tot.1	_____
Relay 8 Source	Tot.1	_____
Relay 1 Trig.	None	_____
Relay 2 Trig.	None	_____
Relay 3 Trig.	None	_____
Relay 4 Trig.	None	_____
Relay 5 Trig.	None	_____
Relay 6 Trig.	None	_____

Relay Menu (Option Q,R, S, or T)	Factory Setting (Default)	User Settings
Relay 7 Trig.	None	_____
Relay 8 Trig.	None	_____

Relay Menu (Option C,D,E, or F)	Factory Setting (Default)	User Settings
Tot. Channel	1	_____
Tot. Number	1	_____
Tot. Number	2	_____
Tot. Number	3	_____
Tot. Number	4	_____
Tot. Type/T1	Off	_____
Tot. Type/T2	Off	_____
Tot. Type/T3	Off	_____
Tot. Type/T4	Off	_____
Source/T1	Channel 1	_____
Source/T2	Channel 1	_____
Source/T3	Channel 1	_____
Source/T4	Channel 1	_____
Mantissa/T1	1.0000 Mant.	_____
Exponent/T1	_0 Exp.	_____
Mantissa/T2	1.0000 Mant.	_____
Exponent/T2	_0 Exp.	_____
Mantissa/T3	1.0000 Mant.	_____
Exponent/T3	_0 Exp.	_____
Mantissa/T4	1.0000 Mant.	_____
Exponent/T4	_0 Exp.	_____
Units/T1	UNITS	_____
Units/T2	UNITS	_____
Units/T3	UNITS	_____
Units/T4	UNITS	_____
Preset Up/T1		_____
Preset Up/T2		_____
Preset Up/T3		_____
Preset Up/T4		_____

Relay Menu (Option C,D,E, or F)	Factory Setting (Default)	User Settings
Preset On/T1		_____
Preset On/T2		_____
Preset On/T3		_____
Preset On/T4		_____
Preload/T1		_____
Preload/T2		_____
Preload/T3		_____
Preload/T4		_____
Low Cutoff/T1	0.00 UNITS	_____
Low Cutoff/T2	0.00 UNITS	_____
Low Cutoff/T3	0.00 UNITS	_____
Low Cutoff/T4	0.00 UNITS	_____
High Cutoff/T1	^^^^^. UNITS	_____
High Cutoff/T2	^^^^^. UNITS	_____
High Cutoff/T3	^^^^^. UNITS	_____
High Cutoff/T4	^^^^^. UNITS	_____
Resettable/T1	No	_____
Resettable/T2	No	_____
Resettable/T3	No	_____
Resettable/T4	No	_____
Rset Trig./T1	None	_____
Rset Trig./T2	None	_____
Rset Trig./T3	None	_____
Rset Trig./T4	None	_____
Hold Trig./T1	None	_____
Hold Trig./T2	None	_____
Hold Trig./T3	None	_____
Hold Trig./T4	None	_____
Cntr. Out/T1	Off	_____
Cntr. Out/T2	Off	_____
Cntr. Out/T3	Off	_____
Cntr. Out/T4	Off	_____
Mantissa/T1	1.0000 Mant.	_____
Exponent/T1	_0 Exp.	_____
Mantissa/T2	1.0000 Mant.	_____
Exponent/T2	_0 Exp.	_____

Relay Menu (Option C,D,E, or F)	Factory Setting (Default)	User Settings
Mantissa/T3	1.0000 Mant	_____
Exponent/T3	_0 Exp	_____
Mantissa/T4	1.0000 Mant	_____
Exponent/T4	_0 Exp.	_____
Tot. Desc./T1	TOTALIZER 1	_____
Tot. Desc./T2	TOTALIZER 2	_____
Tot. Desc./T3	TOTALIZER 3	_____
Tot. Desc./T4	TOTALIZER 4	_____

Calculated Variables (Option B)	Factory Setting (Default)	User Settings
The basic CV factory settings are shown below.		
CV Function	Off	_____
CV Desc.	CALCUL'D VAR. 1	_____
CV Units	UNITS	_____
CV Dec. Pt.	XXXX.X	_____

COMMUNICATIONS Option - Not Available Yet

Retransmission Menu (Option 5,6, 7, or 8)	Factory Setting (Default)	User Settings
RTR1	Source Channel 1	_____
RTR2	Source Channel 1	_____
RTR3	Source Channel 1	_____
RTR4	Source Channel 1	_____
RTR1	Out Ma 4 to 20	_____
RTR2	Out Ma 4 to 20	_____
RTR3	Out Ma 4 to 20	_____
RTR4	Out Ma 4 to 20	_____
RTR1	Low Out _0.00 units	_____
RTR2	Low Out _0.00 units	_____

Retransmission Menu (Option 5,6, 7, or 8)	Factory Setting (Default)	User Settings
RTR3	Low Out _0.00 units	_____
RTR4	Low Out _0.00 units	_____
RTR1	High Out _100.00 units	_____
RTR2	High Out _100.00 units	_____
RTR3	High Out _100.00 units	_____
RTR4	High Out _100.00 units	_____

INSTRUMENT ALARM and CHANGE CALIBRATION parameters have no factory settings.

Control Menu (740C Only)	Factory Setting (Default)	User Settings	
		Controller 1	Controller 2
Setpoints			
Local Setpoint	_0.00 units	_____	_____
Manual Output	_0.0%	_____	_____
Manual Bias	_0.0%	_____	_____
Primary Tuning			
Pri Proportional	_100.0%	_____	_____
Pri Integral	_1.0 min	_____	_____
Pri Derivative	_0.00 min	_____	_____
Remote Setpoint			
RSP Ratio	_1.00	_____	_____
RSP Bias	_0.00 units	_____	_____
RSP Source	Channel 3	_____	_____
Alternate Tuning			
Alt Proportional	_100.0%	_____	_____
Alt Integral	_1.0 min	_____	_____
Alt Derivative	_0.00 min	_____	_____
Alt Source	Off	_____	_____
Default Type	_____	_____	_____
Limits			
Input Low	_0.00 units	_____	_____
Input High	_100.0 units	_____	_____
SP Low	_0.00 units	_____	_____
SP High	_100.00 units	_____	_____
Output Low	_0.0%	_____	_____
Output High	_100.0%	_____	_____
Cutback Low	-100.0 units	_____	_____

Control Menu (740C Only)	Factory Setting (Default)	User Settings Controller 1	User Settings Controller 2
Cutback High	_100.0 units	_____	_____
Alt Trp Low	_0.00 units	_____	_____
Alt Trp High	_100.00 units	_____	_____
FFWD Low	_0.00 units	_____	_____
FFWD High	_100.00 units	_____	_____
Program Loop			
SP Track	Off	_____	_____
Measurement Source*	Channel 1/2	_____	_____
FFWD Source	Off	_____	_____
Cutback	Off	_____	_____
Control Access	On	_____	_____
EX Enable	On	_____	_____
Manual Output Action Equation		_____	_____
LSP Action Equation		_____	_____
Controller Output			
Direction	See Output Type	_____	_____
Output Type	Single	_____	_____
A Cyl Rate	_10 sec/c	_____	_____
B Cyl Rate	_10 sec/c	_____	_____
DAT A Low	_0.0%	_____	_____
DAT A High	_100.0%	_____	_____
DAT B Low	_0.0%	_____	_____
DAT B High	-100.0%	_____	_____
Slew Rate	_0.0%	_____	_____
Program Alarm			
Dev Low	-100.00 units	_____	_____
Dev High	100.00 units	_____	_____
DEV Hysteresis	0.00 units	_____	_____

*Channel 1 for Loop 1
Channel 2 for Loop 2

Ramp Generator (Option G)

Refer to Ramp Generator Description on page 147

Exact Menu (740C Only)	Factory Setting (Default)	User Settings Controller 1	User Settings Controller 2
State	Off	_____	_____
Pretune	Off	_____	_____
Access	Off	_____	_____
Noise Band	_2.0%	_____	_____
Wait Max.	_5.0 min	_____	_____
Damping	_0.30	_____	_____
Overshoot	_0.50	_____	_____
CLM	_10.00	_____	_____
Deriv. Fact	_1.00	_____	_____
Cycle Lim.	_80.0%	_____	_____
Bump	_8.0%	_____	_____
Hold Eq.	_____	_____	_____
Hold PID	Faceplate	_____	_____

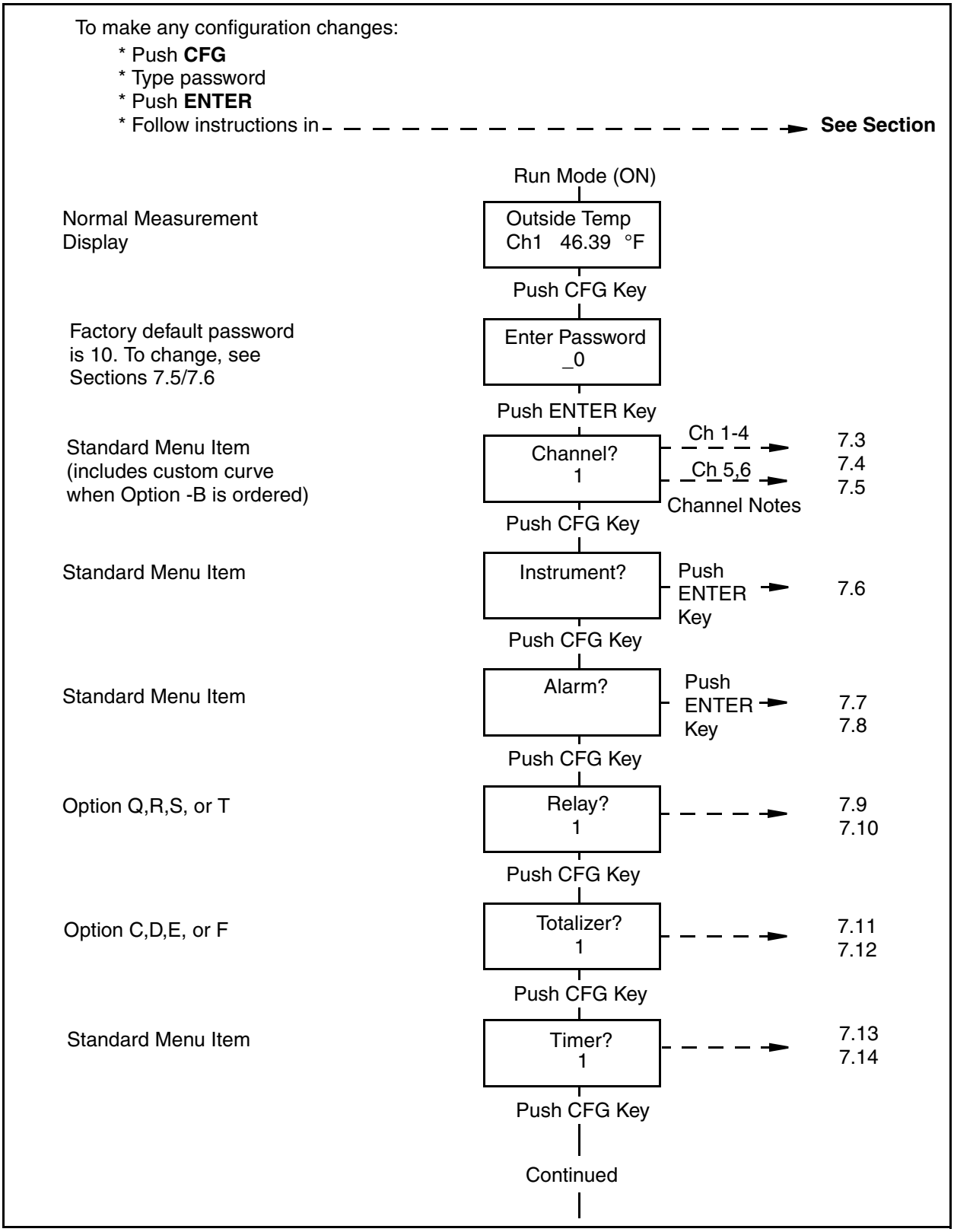

Figure 35. Configuration Procedures, Main Menu Structure

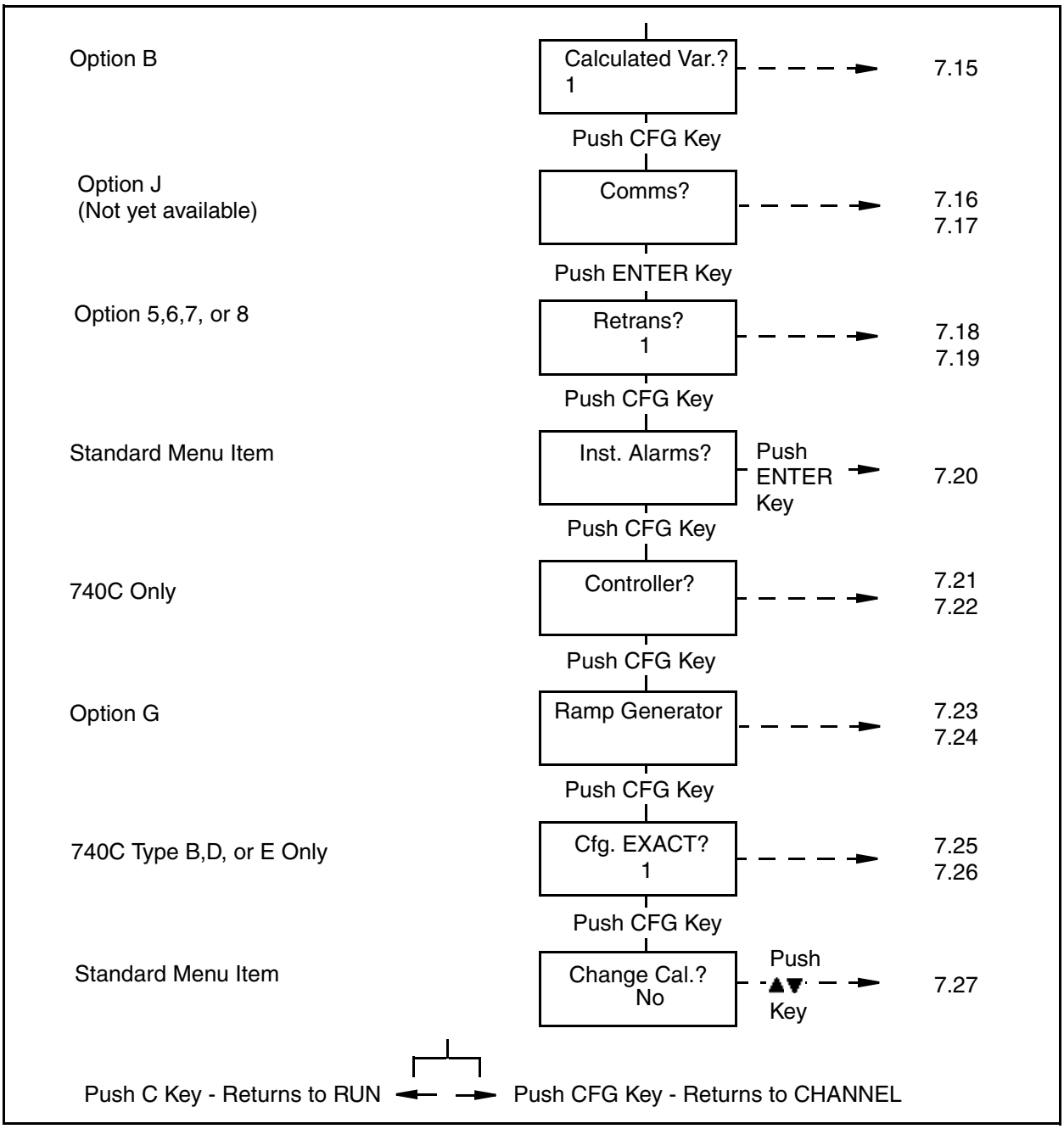

Figure 36. Configuration Procedures, Main Menu Structure (Continued)

Channel (1 to 4) Configuration Procedure

Select Channel

Push	▲▼	Select: Channel 1, 2, 3, or 4 For 5 or 6, see Channel Config. Procedure section	Channel? 1

Select Function

Push	**ENTER**	See:	C1 Lin. Funct. Linear
Push	▲▼	Select: Off, Linear, Square Root, 3/2 Power, t/2 Power, Log- Base 10, Custom Curve (see Inst. Config. Proc. section) T/C: B,C,E,J, NiMol, K,L,N,R,S,T RTD: 10 Ω Copper, 100 Ω Pt. ANSI 100 Ω Pt. DIN, 100 or 120 Ω Nick	SOFT KEY E Your Selection
Push	**ENTER**	See:	C1 Lin. Funct. Your Selection

Select Units

Push	**CFG**	See:	C1 Units Prog. Units
Push	▲▼	Select: °F, °C, or Prog. Units (PSIG, GPM, etc.)	C1 Units E Your Selection
Push	**ENTER**	See:	C1 Units Your Selection

(continued)

Position Decimal Point

Push	**CFG**	See:	C1 Dec. Point XXX.XX
Push	▲▼	Select: Placement of Decimal Point	C1 Dec. Point E Your Selection
Push	**ENTER**	See:	C1 Dec. Point Your Selection

Type Engineering Units (Program Units

Push	**CFG**	See:	C1 Prog. Units UNITS
Push	▲▼ or ▶	Type: Your Engineering Units (PSIG, GPM, IN-H20, etc.) (This display appears only when Prog. Units are selected)	C1 Prog. Units E Your Units
Push	**ENTER**	See:	C1 Prog. Units Your Units

Select Input Type

Push	**CFG**	See:	C1 Input Type Millivolts
Push	▲▼	Select: Millivolts, Volts, Ohms, or Thermocouple (for mA Inputs, select Volts)	C1 Input Type E Your Choice
Push	**ENTER**	See:	C1 Input Type Your Choice

(Continued)

Range Low*

Push	**CFG**	See:	C1 Range Low _0.00 UNITS
Push	▲▼ or ▶	Type: Lowest Value to be Measured (Limits are -99999 to +99999)	C1 Range Low E Your Selection
Push	**ENTER**	See:	C1 Range Low Your Selection

Range High*

Push	**CFG**	See:	C1 Range High _100.00 UNITS
Push	▲▼ or ▶	Type: Highest Value to be Measured (Limits are -99999 to +99999)	C1 Range High E Your Selection
Push	**ENTER**	See:	C1 Range High Your Selection

Input Low (Display not Used with TC Input)*

Push	**CFG**	See:	C1 Input Low _4.00 mV
Push	▲▼ or ▶	Type: Low value for input span See example in Range, Input, and Chart Span Notes Section (Limits are -99999 to +99999)	C1 Input Low E Your Selection
Push	**ENTER**	See:	C1 Input Low Your Selection

*(See Notes in Range, Input, and Chart Span Notes Relating to Channel Configuration on page 82.)

Input High (Display not Used with TC Input)*

Push	**CFG**	See:	C1 Input High _20.00 mV
Push	▲▼ or ▶	Type: High value for input span See example in Range, Input, and Chart Span Notes Section (Limits are -99999 to +99999)	C1 Input High E Your Selection
Push	**ENTER**	See:	C1 Input High Your Selection

Chart Low*

Push	**CFG**	See:	C1 Chart Low _0.00 mV
Push	▲▼ or ▶	Type: Lowest Value to be Recorded (Limits are -99999 to +99999)	C1 Chart Low E Your Selection
Push	**ENTER**	See:	C1 Chart Low Your Selection

Chart High*

Push	**CFG**	See:	C1 Chart High _100.00 mV
Push	▲▼ or ▶	Type: Highest Value to be Recorded (Limits are -99999 to +99999)	C1 Chart High E Your Selection
Push	**ENTER**	See:	C1 Chart High Your Selection

*(See Notes in Range, Input, and Chart Span Notes Relating to Channel Configuration on page 82.)

(Continued)

Select Filter Time (Damping)

Push	**CFG**	See:	Filter Time 1 Second
Push	▲▼	Select: None, 1, 2, 4, 8, 19, or 32 Seconds	Filter Time E Your Selection
Push	**ENTER**	See:	Filter Time Your Selection

Type Your Channel Description

Push	**CFG**	See:	C1 Ch. Desc CHANNEL
Push	▲▼ or ▶	Type: Description for this Channel	C1 Ch. Desc. E Your Selection
Push	**ENTER**	See:	C1 Ch. Desc. Your Selection

Adjust Channel Display and Record

Push	**CFG**	See:	C1 Chart High _100.00 mV
Push	▲▼ or ▶	Type: Highest Value to be Recorded (Limits are -99999 to +99999)	C1 Chart High E Your Selection
Push	**ENTER**	See:	C1 Chart High Your Selection

Push C once to return to CHANNEL? Push C twice to return to RUN.

Channel (5 and 6) Configuration Procedure

Pick Channel

Push	▲▼	Select: Channel 5 or 6	Channel? 1

Select the Source or your Calculated Variable

Push	**ENTER**	See:	C5 Source CV Off
Push	▲▼	Select: Off, C.V. 1, C.V. 2, C.V. 3, C.V. 4, C.V. 5, C.V. 6, C.V. 7, C.V. 8, or C.V. 9	C5 Source CV E Your Selection
Push	**ENTER**	See:	C5 Source CV Your Selection

Pick Units

Push	**CFG**	See:	C5 Units Prog. Units
Push	▲▼	Select: °F, °C, or Prog. Units (PSIG, GPM, etc.)	C5 Units E Your Selection
Push	**ENTER**	See:	C5 Units Your Selection

Position Decimal Point

Push	**CFG**	See:	C5 Dec. Point XXX.XX
Push	▲▼	Select: Placement of Decimal Point	C5 Dec. Point E Your Selection
Push	**ENTER**	See:	C5 Dec. Point Your Selection

(Continued)

Type Engineering Units (Program Units

Push	**CFG**	See:	C5 Units Str. UNITS
Push	▲▼ or ▶	Type: Your Engineering Units (PSIG, GPM, IN-H20, etc.) (This display appears only when Prog. Units are selected)	C5 Units Str. E Your Units
Push	**ENTER**	See:	C5 Units Str. Your Units

Select Input Type

Push	**CFG**	See:	C5 Pen Select none
Push	▲▼	Select: None, Pen 1, Pen 2, Pen 3, Pen 4.	C5 Pen Select E Your Choice
Push	**ENTER**	See:	C5 Pen Select Your Choice

Chart Low*

Push	**CFG**	See:	C5 Chart Low _0.00 °F
Push	▲▼ or ▶	Type: Lowest Value to be Recorded (Limits are -99999 to +99999)	C5 Chart Low E Your Selection
Push	**ENTER**	See:	C5 Chart Low Your Selection

(Continued)

Chart High*

Push	**CFG**	See:	C5 Chart High _100.00 °F
Push	▲▼ or ▶	Type: Highest Value to be Recorded (Limits are -99999 to +99999)	C5 Chart High E Your Units
Push	**ENTER**	See:	C5 Chart High Your Units

Type Your Channel Description

Push	**CFG**	See:	C5 Ch. Desc. CHANNEL 5
Push	▲▼ or ▶	Type: Description for this Channel	C5 Ch. Desc. E Your Choice
Push	**ENTER**	See:	C5 Ch. Desc. Your Choice

Push C once to return to CHANNEL? Push C twice to return to RUN.

*(See Notes in Range, Input, and Chart Span Notes Relating to Channel Configuration on page 82.)

Channel Notes

Range, Input, and Chart Span Notes Relating to Channel Configuration

Range, Input, and Chart Span entries combine to define how the measurement is presented on the Display and/or Chart.

Range

Range is set to include the highest and lowest values to be measured *in the Engineering Units to be used.*

Range Low and High Values *must* be entered for *all* inputs. This is true even for direct TCs and RTDs. This permits automatic setting of the instrument internal operating span (gain) for these inputs.

Input

Input defines the electrical input that represents the Range. Input is not present with Thermocouple Input Type. Input Values need not be entered if the Input Type is Ohms and the Linearization is for an RTD.

Example

A transmitter ranged for 0 to 1000 GPM produces a 4 to 20 mA signal. This is converted to 1 to 5 volts at the instrument with a 250 Ω shunt. The instrument Input is:

lo = 1.00 V
hi = 5.00 V

The instrument range is:

lo = 0 GPM
hi = 1000 GPM

***CAUTION**: Even with Input "Millivolts" chosen, Input High/Range values greater than 400 mV will cause the selection of the next higher Gain Span which is in Volts. An input of 0 to 500 mV - ranged 0 to 500 Units - will measure 0.25 Volts with a 250 mV input. This will cause the Displayed Value to read 0.25 Units - not 250 Units as expected.*

The defined Range is used by the 740 to select an internal operating Gain Span:

-4.0 to +20 mV	-80.0 to +400 mV
-12.0 to +60 mV	-0.34 to +1.7 V
-16.0 to +80 mV	-0.50 to +2.5 V
-40.0 to +200 mV	-1.00 to +5.0 V

Input signals for each Gain Span can go negative by *20% of the high end Span value*. In order to measure negative going input signals, it is sometimes necessary to make the instrument select a higher than normal Gain Span (with a larger 20% negative capability).

> Example
> If a -100 to 100 Range with an Input of -1.0 to 1.0 V is needed, it must be configured as a Range of -100 to 500 with an Input of -1.0 to 5.0 V (a 5.0 V high end will result in the desired -1.0 V negative capability.)

Chart

In the previous example, only the -100 to +100 portion of the Range is needed on the Chart. The Chart Low/High settings permit setting a Chart Range that is not the same as the Channel Range.

```
C1 Range Low/High
X.XXXX?????
```

These are the Low and High Ends (in Engineering Units) of the Displayed and/or Recorded range. They are entered using the UP/DOWN/SIDE ARROW Keys.

Although the instrument may function beyond the entered TC/RTD Range end points, performance will be affected once the selected span is exceeded. Stated recorder TC/RTD accuracy is valid only within the entered Range limits.

> Example
> A Type J thermocouple Range of 0 to 500×F represents a span of 14.993 mV. This Range will cause the recorder to choose an operating span of -4.0 to +20.0 mV. Above 663×F (20 mV) the recorded and/or displayed temperature values will not necessarily be within stated accuracy.

Note that the previously selected Unit-of-Measure will appear on these Range displays.

```
C1 Input Low/High
X.XXXX Ω, V, mV
```

These displays are present only when the Input Type chosen is Volts, Millivolts, or Ohms. Use the UP/DOWN/SIDE ARROW keys to define the actual low and high end electrical input values.

For these Inputs, the internal operating span (gain) will be calculated from the entered Input values. The instrument may function outside these Input settings (up to the maximum Input values permitted), but stated accuracy is valid only within the Input settings.

If Ohms is chosen as the Input Type ***and*** any RTD Type chosen as the Linearization Function, no Input Low or High value need be entered. The internal operating span (gain) will be calculated from the Range Low/High.

If Ohms is chosen as the Input Type *and* Linear or Custom Curve is chosen as the Linearization Function, both Input Low and High values *must* be entered to define a specific resistance Input and permit calculation of the internal span.

```
C1 Chart Low/High
X.XXXX?????
```

These are the Low and High end values of the chart record. They do not necessarily have to be the same as the Range Low/High values. A segment of the Range can be expanded for more detailed chart recording. Also, the chart span can be greater than the Range - effectively limiting the record to a selected portion of the chart.

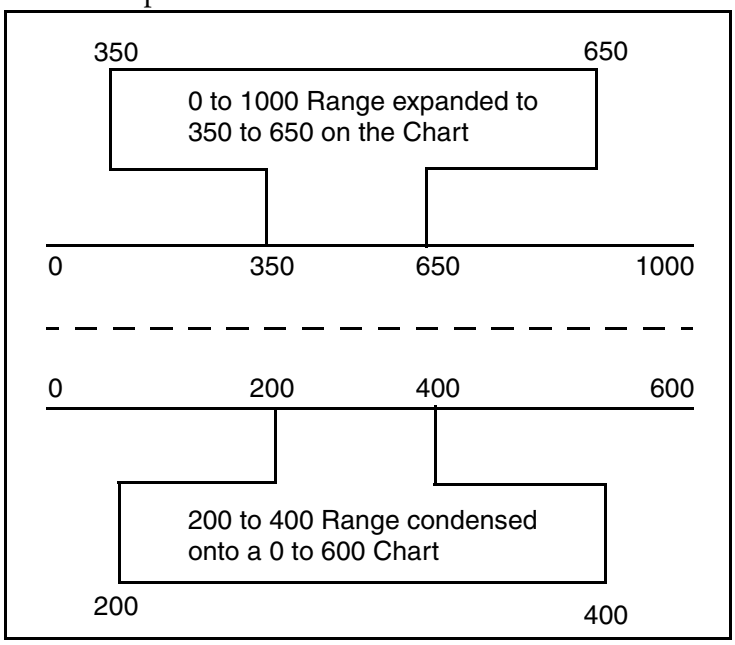


```
C1 Filter Time
```

The Input Filter (damping) slows the Full-range response of the complete instrument from its normal 0.5 s (None) to: 1, 2, 4, 8, 16, or 32 s. All functions, including alarm sensing and response, are slowed by this feature. Use the UP/DOWN ARROW keys to change the selection.

```
C1 CJC Type
Int. / Ext.
```

The TC Cold (reference) Junction compensation site (where the signal lead changes from Thermocouple wire or Compensated Leadwire to Copper) can be specified as the recorder case input terminal PWA (Internal) or a remote terminal area (External).

Use the UP/DOWN ARROWS to select the proper CJC Type. If the choice is *External*, the temperature of the remote site must be entered in the “Instrument Menu.”

```
C1 Ch. Descr.
????????????????
```

The Ch. Descriptor is a 16-character tag which appears above the current value on a single channel display. The Descriptor is entered using the UP/DOWN/SIDE ARROW keys. See Menu and Select Keypad on page 23 for the character listing.

In some cases it is desirable to adjust the displayed and recorded Channel Value to agree with other measurements. Positive values *add* to and negative values *subtract* from the measured value.

```
C1 Ch. Adjust
X.XXXX?????
```

The Channel Adjustment can also be used to zero an input (such as a load cell) which has a unique value for a zero reading. Use the UP/DOWN/SIDE ARROW keys to enter the amount of the Adjustment.

Instrument Configuration (Common to All Channels) Procedure

Pick Primary Chart Speed

from **INSTRUMENT**? Figure 35 and Figure 36.			Pri. Chart Spd _24 HR/RV
Push	▲▼ or ▶	Type: Any Speed Between 0 and 4096 Hours per Revolution may be Selected to Match your Chart	Pri. Chart Spd E Your Selection
Push	**ENTER**	See:	Pri. Chart Spd. Your Selection

Pick Alternate Chart Speed

Push	**CFG**	See:	Alt. Chart Spd _24 HR/RV
Push	▲▼ or ▶	Type: Any Speed Between 0 and 4096 Hours per Revolution to Match your Chart	Alt. Chart Spd E Your Selection
Push	**ENTER**	See:	Alt. Chart Spd Your Selection

(Continued)

Assign ACTION EQUATION TRIGGER CODES for Alternate Chart Speed

(Action Equations and Internal Triggers on page 179 explains ACTION EQUATIONS AND INTERNAL TRIGGERS).

Push	**CFG**	See:	Spd Act Eq?
Push	**ENTER**	See:	Spd Act Eq P 1 ---, , , ,
Push	▲▼ or ▶	Select: As many Trigger Codes as necessary to complete your ACTION EQUATION. If you use more than 4 codes, push ENTER after the fourth code, then CFG to move to page 2 (P 2).	Spd Act Eq P 1 E Your Selection
Push	**C**	See:	Spd Act Eq?

Assign ACTION EQUATION TRIGGER CODES for Chart Hold Function

(Action Equations and Internal Triggers on page 179 Explains ACTION EQUATIONS AND INTERNAL TRIGGERS).

Push	**CFG**	See:	Cht Hold Eq?
Push	**ENTER**	See:	Cht Hold Eq P 1 ---, , , ,
Push	▲▼ or ▶	Select: As many Trigger Codes as necessary to complete your ACTION EQUATION. If you use more than 4 codes, push ENTER after the fourth code, the CFG to move to page 2 (P 2).	Cht Hold Eq P 1 E Your Selection
Push	**C**	See:	Cht Hold Eq?

(Continued)

Enable SOFT KEY Function to the OPERATOR

Push	**CFG**	See:	Soft Key?
Push	**ENTER**	See:	Soft Key En. No
Push	▲▼	Select: Soft Key Function Yes/No to the Operator	Soft Key En. E Your Selection
Push	**ENTER**	See:	Soft Key En. Your Selection
Push	**CFG**	See:	Soft Key Desc. SOFT KEY
Push	▲▼ or ▶	Type: Your Description. You may use up to 16 characters.	Soft Key E Your Description
Push	**ENTER**	See:	Soft Key Your Description
Push	**C**	See:	Soft Key Yes

SOFT KEY is an operator function that *manually* triggers an action equation. An action equation may be used to start, stop, or reset specified recorder or controller functions. This portion of the INSTRUMENT Menu turns access to the SOFT KEY feature ON or OFF to the operator.

(Continued)

Select Passcode

Push	**CFG**	See:	Password _10
Push	▲▼ or ▶	Select: Your own Passcode/Password, use any Number from 1 to 3 Digits. (Limits are 1 to 127). See Notes.	Password E Your Selection
Push	**ENTER**	See:	Password Your Selection

NOTES:
1. There is a 2-position Configuration Lockout switch located behind the platen on the display PWA. When the switch is "on" and a user tries to access the CONFIGURE Mode, the display reads "Config. Lockout" and access is denied.
2. Once the passcode is changed to a user selected passcode, only the new passcode will access the CONFIGURE Mode.

Enable ALARM Function to the OPERATOR

Push	**CFG**	See:	Alarm Access
Push	▲▼	Select: ON/OFF This means allowing access of Alarm Settings to an Operator.	Alarm Access E On
Push	**ENTER**	See:	Alarm Access On

(Continued)

Select Custom Curve - Option (-B)

Push **CFG** See:

Custom Curve

The Custom Curve is an 11-point, user-entered linearization curve. It is an optional Linearization Function that defines the relationship between the Input Signal and the Recorded/Displayed Value. When this option is present, "Custom Curve?" appears in the selection list for the Channel Linearization Function.

The Custom Curve combines the flexibility of a line/segment curve with the curve matching power of a polynomial equation. The Custom Curve is defined by five Segments. Each Segment consists of three Point Pairs which are used to calculate a second order polynomial equation for that Segment.

Adjacent segments share common endpoints to assure continuity. Segment 1 consists of Point Pairs 1, 2, and 3. Segment 2 is defined by Point Pairs 3, 4, and 5. Segment 3 is Point Pairs 5, 6, and 7, etc.

The curve is defined by entering unique Point Pair values for all five segments. For proper operation of the Custom Curve, all eleven point pairs must be entered (See Example).

Example

The volume in a tank is to be recorded by using a pressure transmitter mounted at the bottom of the tank. If the tank can be described as a cylinder above a cone, the pressure signal vs. fill volume can be defined by a curve made up of two square root segments and one straight line segment.

Signal	Units	PT. PR.	Seg.
4.0 mA =	1.000 = 0.00% -	1	1
4.5 mA =	1.125 = 2.22% -	2	1
5.0 mA =	1.250 = 6.67% -	3	1 2
5.5 mA =	1.357 = 11.11% -	4	2
6.0 mA =	1.500 = 20.00% -	5	3 2
13.0 mA =	3.250 = 60.00% -	6	3
20.0 mA =	5.000 = 100.00% -	7	3 4
	6.000 = 200.00% -	8	4
ENTER	7.000 = 300.00% -	9	5 4
ALL 11	8.000 = 400.00% -	10	5
PAIRS	9.000 = 500.00% -	11	5

(Continued)

NOTES:
1. If any of the 11 Point Pairs are not needed to define the part of a Custom Curve that is to be used, their Signal and Unit values ***must*** *be* ***increasingly greater*** *than the* ***largest*** *Signal and Unit values included in the unique Point Pairs that are used (see Points 8 through 11 in Example).*
2. Because the Custom Curve can be selected as the Linearization Function for any channel, the Point Pairs carry no Range Units-of-Measure or Input Units. When configuring the Custom Curve, enter all values into the CHANNEL MENU for Signal Input and Range Low/High units for the channel where the Custom Curve is to be used.

The first step when using a Custom Curve, is to determine the Input and Units values that will define the Custom Curve. If the curve is a series of straight lines (as in the example tank profile), fewer than five segments may be adequate to define the area to be used on the curve. For custom thermocouple curves, a three-point cold junction curve must also be entered. The following procedure shows how to enter the necessary values for creating your own custom curve.

Push	**ENTER**	See:	Signal D P Pos. XXX.XX
Push	▲▼	Position: The Decimal Point for the Signal Input Values. Then Push ENTER.	
Push	**CFG**	See:	Units D P Pos. XXX.XX
Push	▲▼	Position: The Decimal Point for the Range Units Values. Then Push ENTER.	
Push	**CFG**	See:	Point Pair 1
Push	▲▼	Select: Point Pair 1 Then Push ENTER	
Push	**CFG**	See:	Pt. 01 Signal _0.00
Push	▲▼ or ▶	Type: Signal Value for your Curve for each of the 11 Points. (Signal Value must be the same chosen for that Channel in the CHANNEL Menu. Then Push ENTER	

(Continued)

Push	**CFG**	See:	Pt. 01 Signal _0.00
Push	▲ ▼ or ▶	Type: Units Value for your Curve for each of the 11 Points. (Units Value must be the same as chosen for that Channel in the CHANNEL Menu.	
Push	**C**	Returns: To Point Pair, Select the Next Point Pair in Sequence and Repeat the Last Three Steps until all 11 Points are Completed. Use EXAMPLE as a Guide.	
Push	**CFG**	See: Cold Junction Point Pair	CJ Point Pair
Push	▲ ▼	Select: A CJ Point Pair; Select Cold Junciton Pair 1-3. A 3-Point Cold Junction Compensation Curve is used with a Thermocouple Custom Curve. This Curve is not Active unless Input Type Thermocouple is Chosen for the Channel where the Customer Curve is the Selected Linearization Function.	
Push	**ENTER**	See:	CJ 1 mV. _0.00 mV
Push	▲ ▼ or ▶	Type: The Millivolt Equivalents of the Lowest (CJ1), Midpoint (CJ2), and Highest (CJ3) Ambient Temperatures that the Recorder will Encounter while Operating with the Custom Thermocouple Curve Entered above. Select these Values in Sequence, CJ 1 First, and so on.	
Push	**ENTER**	See:	CJ 1 Temp. _0.0 °C
Push	▲ ▼ or ▶	Type: The Lowest (CJ1), Midpoint (CJ2), and Highest (CJ3) Ambient Temperatures (in °C) that are Equivalent to the Millivolts Entered above for the Type of Thermocouples to be used. Select these Values in Sequence, CJ 1 First, and so on.	
Push	**C**	Returns: To CJ Point Pair, Repeat the Last Steps for all CJ Point Pairs.	
Push	**C**	Returns: To Custom Curve and allows Passage to Next Menu	

Select External Cold Junction Temperature (for Thermocouple Applications

Push	**CFG**	See:	Ext. CJC Temp. _0.0 °C
Push	▲▼ or ▶	Select: Your External Cold Junction Temperature, Express in °C (Limits are -99999 to +99999)	Ext. CJC Temp. E Your Selection
Push	**ENTER**	See:	Ext. CJC Temp. Your Selection

Choose Global Alarm Mode

Push	**CFG**	See:	GLA Mode? Static
Push	▲▼	Select: The Global Alarm (Bell Symbol) may Flash On and Off, or Appear Steady On. Flashing or Static	GLA Mode E Your Selection
Push	**ENTER**	See:	GLA Mode Your Selection

Push C once to return to INSTRUMENT?. Push C twice to return to RUN.

Alarm Configuration Description

Alarm Quantity

Each of the six channels (includes the optional Calculated Variable Channels) can have up to four Alarm Setpoints. Therefore, this instrument could have up to 24 Alarm Setpoints.

Alarm Indication

If there is an alarm condition on any channel (global alarm), a bell symbol ( ) appears in the lower or upper right-hand corner of the display. The symbol may either be flashing or static as chosen from the Instrument Configuration Menu. Paging through the displays will find the channel appropriate to the particular alarm. A symbol in the upper right-hand corner of the display indicates the type of alarm. See Symbols below.

Alarm Types

OFF	Use to **deactivate** any Alarm (even if a Setpoint has been entered).
HIGH	This Alarm is **active** when Measured Value is **above** Setpoint.
LOW	This Alarm is **active** when Measured Value is **below** Setpoint.
DEADBAND	This Alarm sets a “normal” operating band about Setpoint. If the Measured Value is above **or** below the Setpoint by more than the Deadband Setting, the Alarm is active.
RATE-RISING	A Rate-of-Change Alarm measures the rate at which a Measured Input is increasing. It is set in terms of Units per Time Period. If the input changes at a rate which exceeds the set rate, then the alarm becomes active.
RATE-FALLING	This Rate-of-Change Alarm operates similarly to the Rate-Rising Alarm above. It becomes active when a Measured Value is decreasing faster than the set Rate.

Alarm Symbols

🔔	Global Alarm, indicates an alarm on any channel. This symbol may be Flashing or Static as selected in the INSTRUMENT Menu.
^	indicates a High alarm.
v	Indicates a Low alarm.
↑	Indicates Rate-Rising alarm.
↓	Indicates Rate-Falling alarm.
|←	Indicates Dead Band alarm.

Alarm Configuration Procedure

Select Alarm Channel

From ALARM? Figure 35 and Figure 36.			Alarm Channel? 1
Push	▲▼	Select: Channel 1, 2, 3, 4, 5, or 6	Alarm Channel? Your Selection

Select Alarm Number

Push	**ENTER**	See:	Alarm Number? 1
Push	▲▼	Select: Alarm Number 1, 2, 3, or 4	Alarm Number? Your Selection

Select Alarm Type

Push	**ENTER**	See:	All Alarm Type Off (see Note below)
Push	▲▼	Select: Alarm Type for that Number Off, High, Low, Deadband, Rate-Rising, or Rate-Falling	All Alarm Type E Your Selection
Push	**ENTER**	See:	All Alarm Type Your Selection

NOTE: "A11" in the upper left-hand corner of the display does not mean ***ALL***
A11 means: Alarm, Channel 1, Alarm 1
A34 means: Alarm, Channel 3, Alarm 4

(Continued)

Select Setpoint

Push	**CFG**	See:	All Setpoint _0.00 °F
Push	▲▼ or ▶	Type: Appropriate Setpoint (Limits are -99999 to +99999)	All Setpoint E Your Selection
Push	**ENTER**	See:	All Setpoint Your Selection

Enter Hysteresis

Push	**CFG**	See:	All Hysteresis _0.00 °F
Push	▲▼ or ▶	Type: Your Value Hysteresis Prevents Alarm Cycling Near the Setpoint by Establishing the Number of Units by which the Measured Value Must Pass the Setpoint before the Alarm Resets. See Example. (Limits are -99999 to +99999)	All Hysteresis E Your Selection
Push	**ENTER**	See:	All Hysteresis Your Selection

Example

If a tank temperature Alarm is set at 450 °F, it will become active at 450.0 °F and reset at 449.9 °F. A variation of 0.1 °F will turn the Alarm ON or OFF. If the temperature is held at about 450 °F, the Alarm could be very active.
To prevent this, set a Hysteresis value of 5.0 °F. The Alarm will still signal when 450.0 °F is reached, but it will not reset until the temperature has decreased below 445.0 °F.

(Continued)

Select Deadband (This Display Appears Only when Alarm Type is Deadband)

Push	**CFG**	See:	All Deadband _0.00 °F
Push	▲▼ or ▶	Type: Your Value (Limits are -99999 to +99999)	All Deadband E Your Selection
Push	**ENTER**	See:	All Deadband Your Selection

Select Rate Base

(This Display Appears Only when Alarm Type is Rate of Change)

Push	**CFG**	See:	All Rate Base /Hour
Push	▲▼ or ▶	Select: /Hour, /Min, or /Sec	All Rate Base E Your Selection
Push	**ENTER**	See:	All Rate Base Your Selection

Repeat this Procedure for each Alarm

Push	**C**	Once: Returns to Alarm Number?	Repeat for Each Alarm.
Push	**C**	Twice: Returns to Alarm Channel?	Repeat for Each Alarm.
Push	**C**	Three Times: Returns to Top Level Alarm Menu	

Relay Output Description

These optional relays automatically trigger either from an ACTION EQUATION (see Action Equations and Internal Triggers on page 179), or from a totalizer counter output (see Totalizer Configuration Procedure on page 100).

If relay type Action Equation is chosen, the relay output goes to wherever it is wired. If relay type Totalizer Output is chosen, then the relay output specifically goes to an external counter or sample system.

Relays may be wired for normally open (NO) or normally closed (NC) action as desired. Note, however, that when Relay Type “Action Equation” is chosen, the relay automatically energizes. Its response to an Action Equation is to de-energize. This means that relays (from

Relay Type Action Equation only) have their NC contacts open. **The NC contacts close on trigger.**

Configure your relays by selecting the relay number, relay type, and relay source or action equation as follows.

Relay Output Configuration Procedure

Select Relay Number

Push	▲▼	Select: Relay 1, 2, 3, 4, 5, 6, 7, or 8	Relay? 1

Select Relay Type

Push	**ENTER**	See:	RYX Type Off
Push	▲▼	Select: Off, Action Equation Output, Totalizer Output, or DAT Output X=Relay Number 1 through 8	RYX Type E Your Selection
Push	**ENTER**	See:	RYX Type Your Selection

Select DAT Output Source

(This display appears only with Relay Type DAT Output)

Push	**CFG**	See:	RYX DAT Source Control 1A
Push	▲▼	Select: Control 1A Control 1B Control 2A Control 2B	RYX DAT Source E Your Selection
Push	**ENTER**	See:	RYX DAT Source Your Selection

(Continued)

Select Totalizer Source

(This Display Appears Only with Relay Type Totalizer Output)

Push	**CFG**	See:	RYX Source Tot. 1
Push	▲ ▼	Select: Totalizer Output 1, 2, 3, or 4	RYX Source E Your Selection
Push	**ENTER**	See:	RYX Source Your Selection

Assign ACTION EQUATION TRIGGER CODES that will Activate the Relay

(The section Action Equations and Internal Triggers on page 179 explains Action Equations.)

(This Display Appears Only when Relay Type is Action Equation Output)

Push	**CFG**	See:	RYX Act Eq?
Push	**ENTER**	See:	RYX Act Eq? P 1 ---, , , ,
Push	▲ ▼ or ▶	Select: As many Trigger codes as necessary to complete your ACTION EQUATION. If you use more than 4 codes, push ENTER, then CFG to move to Page 1 (P 2).	RYX Act Eq? P 1 Your Selection
Push	**ENTER**	See:	RYX Act Eq? P 1 Your Selection

Repeat this Procedure for each Relay

Push	**C**	Once: Returns to RYX Act Eq?	
Push	**C**	Twice: Returns to Relay?	Repeat for each Relay.
Push	**C**	Three times: Returns to RUN Mode	

Totalizer Configuration Description

Up to four totalizers are available with this instrument, depending on the option chosen, and may be utilized in a variety of ways.

A Totalizer is an Electronic Integrator primarily used to record the numeric total over time of a Measured Value that is expressed as a rate (e.g., the number of gallons since reset, based on a flow rate in gallons per minute).

The Totalizer reads the ranged numeric value of its Input Source once each second. Each reading is *divided* by the Totalizer Factor (usually the number of seconds in the Measured Value rate - /s, /min, /hr, /day), and added to the total.

Example

A Totalizer is reading a gas flow Range of 0 to 1200 cubic feet per *minute*. At half flow (600 CFM), the flow rate is 600/60 or 10.0 cubic feet per *second*. Unless scaled otherwise, 10 counts will be added to the Totalizer each *second*.
A flow rate of 4320 gallons per *day* will give a Totalizer input of 4320/86400 = 0.05 per *second* (86400 = 60 s x 60 min x 24 hrs). Counts are added in whole units, resulting in one count added each 20 seconds (20 x 0.05 = 1) unless scaled otherwise.

NOTES:

1. The totalizer factors (mantissa and exponent) must be properly configured for accurate counts.

2. If the supply voltage is lost, the current totalizer value is saved for up to 100 hours by a capacitor on the CPU Card.

The Totalizer can also output to a remote counter. This optionally available feature permits using a *separately specified* output relay to “retransmit” the Totalizer Counts to an external counter or sample system. Output Counts can either be on a one-for-one basis with one 50 millisecond contact closure for each Totalizer count (up to 8/s maximum) or a scaled number, e.g., one Output Count for every 1000 Totalizer Counts.

Totalizer Configuration Procedure

Select Totalizer Number

Push	▲▼	Select: Totalizer 1, 2, 3, or 4	Totalizer? 1

Select Totalizer Type

Push	**ENTER**	See:	TT1 Type Off
Push	▲▼	Select: Off, Continuous, Preset Up, Preset Down, or Preload	TT1 Type Your Selection
Push	**ENTER**	See:	TT1 Type Your Selection

Continuous Totalizers add up the total of a Measured Value until they are:

Reset manually, or

Reset by an Internal Trigger specified in its Action Equation (see Action Equations and Internal Triggers on page 179), or

Automatically Reset when the count exceeds 999,999,999.

NOTE: Internal Triggers TT1 through TT4 are active as a Totalizer resets automatically.

Preset Totalizers either count *up* to a Preset Number or count *down* from a Preset Number to zero. In either case, the Totalizer outputs an Internal Trigger at the end of its count. This Trigger can be used to execute the actions as detailed under Triggers and Action Equations in Action Equations and Internal Triggers on page 179, including resetting the Totalizer to start over again.

Preload Totalizers are continuous totalizers that start counting *from a user entered value.* The preload feature is useful when totalizing must be HELD at a particular value, and later restarted from that value (Preload).

Select Totalizer Source

Description —When a Totalizer has a Channel Source, the Totalizer Factor defines the *time rate* of the source Channel (in *seconds*).

Push	**CFG**	See:	TT1 Source Channel 1
Push	▲▼	Select: Channel 1, 2, 3, 4, 5, or 6 or Contact Input 1 through 16. Referred to as C11 - C18 and C21 - C28.	TT1 Source E Your Selection
Push	**ENTER**	See:	TT1 Source Your Selection

Enter Totalizer Factors (Mantissa and Exponent)

Push	**CFG**	See:	TT1 Factor?
Push	**ENTER**	See:	TT1 Fact Man _1.0000 Mant.
Push	▲▼ or ▶	Type: Your Mantissa Factor, then ENTER (Limits are -99999 to +9.9999)	
Push	**CFG**	See:	TT1 Fact Exp _0 Exp.
Push	▲▼ or ▶	Type: Your Exponent Factor, then ENTER (Limits are -30 to +30)	
Push	**C**	See:	TT1 Factor?

The Totalizer Factor is entered in scientific notation (a “powers of 10” number). These numbers are expressed by a numeric value Mantissa and an Exponent which places the decimal point. See the Example below.

> Example
>
> The number 1000 is expressed as:
> 1.000×10^3
> The Mantissa = 1.000
> The Exponent = 3 (moving the Mantissa decimal point three places to the right).

Commonly used Totalization Factors are:

	Sec.	Mantissa	Exponent (10^x)
Per second	1	1.0000	0
Per minute	60	6.0000	1
Per hour	3600	3.6000	3
Per day	86400	8.6400	4

It is important to remember that the Totalizer reads the Channel Value. When configuring a Channel, Measured Values that would normally be expressed in more than five digits (e.g., 0 to 3 000 000 Gallons per Day) *must* be Ranged as a ratio of that number (e.g., 0 to 3000 with a description of “Gal./Day X 1000."

The Totalizer would also be counting in thousands of gallons. 3 000 000 Gallons would add 3000 Counts to the Totalizer.

It is also possible to make the Totalizer count faster than the rate from the Source. To do this, reduce the Factor Exponent value by the scaling multiple. To scale the counting up by 1000, subtract 3 (10^3) from the Factor Exponent.

CAUTION: *If the Source is Ranged 0 to 3.0 and the Totalizer is scaled up by 1000, each 0.1 change in the Source affects 100 counts, with a potentially large rounding error. Source Ranging in this case should be 0 to 3.000 where each 0.001 would represent 1 count.*

To make a Totalizer count slower, the Factor is increased. Directly Totalizing 30 000 Gallons per Minute (a Factor of 6.0000×10^1) would add 43 200 000 Counts per day and overflow the Totalizer counter in 23 days.

If the Factor were scaled to count in thousands rather than units by changing the Factor from 6.000×10^1 (60) to 6.0000×10^4 (60 000); 43 100 Counts would be added per day, with each Count representing 1000 gallons. The counter would then take over 60 years to reach 999 999 999.

Type Units

Push	**CFG**	See:	TT1 Units UNITS
Push	▲▼ or ▶	Type: Your Units (i.e., GPM, Tons/Hr)	TT1 Units E Your Selection
Push	**ENTER**	See:	TT1 Units Your Selection

Select Preset Value (This Display Appears Only with Preset or Preload Type)

Push	**CFG**	See:	TT1 Preset _0 UNITS
Push	▲▼ or ▶	Select: Your Preset Value	TT1 Preset E Your Selection
Push	**ENTER**	See:	TT1 Preset Your Selection

Preset up counts up to this value, outputs it Internal Trigger and stops until reset. *Preset Down* counts down to zero, outputs its Internal Trigger and stops. *Preload* starts counting continuously from the preset number until it resets or overflows.

Select Low Cutoff

Push	**CFG**	See:	TT1 Low Cutoff _0.00 UNITS
Push	▲▼ or ▶	Type: Low Cutoff Point (Limits are -99999 to +99999)	TT1 Low Cutoff E Your Selection
Push	**ENTER**	See:	TT1 Low Cutoff Your Selection

Some measured values are not meaningful near the low end of their range and some become negative when their input is turned off. To avoid totalizing these inaccurate signals, use the Low Cutoff feature. Totalization stops below this value.

Select High Cutoff

Push	**CFG**	See:	TT1 Hi Cutoff _^^^^^.UNITS
Push	▲▼ or ▶	Type: High Cutoff Point. The ^^^^^ symbol is the default for over range. All five symbols must be changed or deleted. (Limits are -99999 to +99999) Once the ^^^^^ symbol is changed, it is permanently replaced until memory is lost due to long term power outage.	TT1 Units E Your Selection
Push	**ENTER**	See:	TT1 Hi Cutoff Your Selection

Make Totalizer Resettable, Yes/No

Push	**CFG**	See:	TT1 Resettable No
Push	▲▼	Select: Yes or No	TT1 Resettable E Your Selection
Push	**ENTER**	See:	TT1Resettable Your Selection

This choice determines whether a totalizer can be reset. This choice is **Password Protected**, if the choice is NO then the totalizer can not be reset by either the operator or the action equation.

Assign Action Equation Trigger Codes for Totalizer Reset

(Action Equations and Internal Triggers on page 179 explains Action Equations and Internal Triggers.)

Push	**CFG**	See:		TT1 Rset Eq?
Push	**ENTER**	See:		TT1 Rset Eq P 1 ---, , , ,
Push	▲▼ or ▶	Select:	As many Trigger Codes as necessary to complete your Action Equation. If you use more than 4 codes, push ENTER after the fourth code, then CFG to move to the next page (P 2). Push ENTER when complete.	TT1 Rset Eq P 1 E Your Selection
Push	**C**	See:		TT1 Rset Eq?

A totalizer can be reset by its own trigger, making it a repeat totalizer that starts over after it reaches its preset value.

Assign Action Equation Trigger Codes for Totalizer Hold

(Action Equations and Internal Triggers on page 179 explains Action Equations and Internal Triggers.)

Push	**CFG**	See:		TT1 Hold Eq?
Push	**ENTER**	See:		TT1 Hold Eq P 1 ---, , , ,
Push	▲▼ or ▶	Select:	As many Trigger Codes as necessary to complete your Action Equation. If you use more than 4 codes, push ENTER after the fourth code, then CFG to move to the next page (P 2). Push ENTER when complete.	TT1 Hold Eq P 1 E Your Selection
Push	**C**	See:		TT1 Hold Eq?

Turn Optional Remote Counter Output On/Off

Push	**CFG**	See:	TT1 Cntr. Out Off
Push	▲▼	Select: On or Off	TT1 Cntr. Out E Your Selection
Push	**ENTER**	See:	TT1Cntr. Out Your Selection

Enter Optional Totalizer Output Factors, Mantissa, and Exponent

Push	**CFG**	See:	TT1 Out. Fact?
Push	**ENTER**	See:	TT1 Out Man _1.0000 Mant.
Push	▲▼ or ▶	Type: Your Mantissa Factor, then ENTER (Limits are -99999 to +9.9999)	
Push	**CFG**	See:	TT1 Out Exp _0 Exp.
Push	▲▼ or ▶	Type: Your Exponent Factor, then ENTER (Limits are -30 to +30)	
Push	**C**	See:	TT1 Out Fact.?

The Output can be scaled by the Output Factor to count slower or faster than the Totalizer Counter. The *maximum* rate for the Trigger is 8 pulses per second, and each Trigger pulse is "ON" for 50 milliseconds.

See Totalization Factor (preceding) for a description of this type of "powers of 10" Factor.

Type Totalizer Description

Push	**CFG**	See:	TT1 Cntr. Out Off
Push	▲▼	Select: On or Off	TT1 Cntr. Out E Your Selection
Push	**ENTER**	See:	TT1Cntr. Out Your Selection

Push C Once: Returns to Totalizer? Push C Twice: Returns to RUN

Timer Configuration Description

For making some 740 functions occur when you want them to, there are four Period Timers.

A *Period Timer* starts (resets) on command from any Internal Trigger and outputs its own Internal Trigger (TM1 to TM4) after reaching its preset Duration. This Trigger can be used to actuate any action equation or reset itself making it a Repeating Interval Timer.

NOTE: Because of internal processing time requirements, there is a one second delay between each repeat of a Periodic Timer. Repeated use will cause a cumulative shift in start time.

After power loss, the timer resets to its configured value.

Timer Configuration Procedure

Select Timer Number

Push	▲▼	Select: Timer 1, 2, 3, or 4	Timer? 1

Select Timer Type

Push	**ENTER**	See:	TM1 Type Off
Push	▲▼	Select: Off, Periodic	TM1 Type E Your Selection
Push	**ENTER**	See:	TM1 Type Your Selection

Select Timer Duration

Push	**CFG**	See:	TM1 Duration _0 min
Push	▲▼ or ▶	Select: Time Duration in Minutes. (limits are 0 to 999999999)	TT1 Duration E Your Selection
Push	**ENTER**	See:	TM1 Duration Your Selection

Assign Action Equation Trigger Codes that will Activate the Timer

(Action Equations and Internal Triggers on page 179 explains Action Equations And Internal Triggers.)

Push	**CFG**	See:	TM1 Rset Eq?
Push	**ENTER**	See:	TM1 Rset Eq P 1 ---, , , ,
Push	▲▼ or ▶	Select: As many Trigger Codes as necessary to complete your Action Equation. If you use more that 4 codes, push ENTER then CFG to move to Page 2 (P 2). Push ENTER when complete.	Tm1 Rset Eq P 1 Your Selection
Push	**C**	See:	TM1 Rset Eq.?

Repeat this Procedure for each Timer

Push	**C**	Once: Returns to Timer?	Repeat for each Timer.
Push	**C**	Twice: Returns to RUN Mode.	

Calculated Variable Configuration Menu

General Description of Calculated Variables

By now you are quite familiar with the keypad, display, and how to maneuver through various menu structures. The menus that follow are not presented with the same step-by-step procedures. The Menu Structure Diagrams in Figure 22 show all the items in the menu. This section explains what to do with them.

CFG key - to move through a menu of displays

ENTER key - to select a "?" item

UP/DOWN ARROW keys - to change selections

SIDE ARROW key - to move cursor

LIGHTED "E" in upper right requires ENTER or CLEAR to leave that display

This option provides basic and specialized math functions. It adds two Calculated Channels which are *displayed and recorded as independent recorder Channels 5 and 6*. A Calculated Channel brings with it nine Calculated Variable (CV) calculations.

CV Calculations combine Channel Inputs, Constants, the results of other Calculations and Preconfigured Equations to compute values which are then applied to the Calculated Channels. Calculated Channels are the *only* means of recording the results of CV Calculations. A calculated channel can only be recorded by assigning it (in the Channel Configuration Menu) to one of the recorder pens. The normal input channel for the pen reassigned to a CV can still be configured to *display* its measured value and can also be Totalized and used as an input to a CV calculation.

Basic Calculations - Calculated Variables

OFF	No Cv Calculation	(default state)
ADD	Add	A + B
SUB	Subtract	A - B
DIV	Divide	A / B
MLT	Multiply	A * B
LIN	Linear	(A * B) + C
HSL	High Select	A > B →A
LSL	Low Select	A > B →B
HPK(1)	High Peak	Highest Value Since Reset
LPK (1)	Low Peak	Lowest Value Since Reset
AVE (1)	Single Point Average	
PLY	Polynomial	B + (C * A) + (D * A^2) + (E * A^3)

Specialized Functions - Calculated Variables

LOG	Log to Base 10	B * log(A)
PWR	Power of 10	B * 10A
MFS	Mass Flow - Square Root	
MFL	Mass Flow - Linear	
STR[1]	Sterilize Constant (F0)	
REL	Relative Humidity	
ZIR	Zirconia O2 Probe	

IMPORTANT: CV Calculations operate on the Engineering Units of an Input Channel. If a 4 to 20 mA input is scaled 0 to 1000 psig, the Calculations use values of psig.

[1] The indicated CV calculations have accumulated values. These values will be saved by a capacitor for 100 hours if supply voltage is lost.

NOTE: To simplify notation, the above formulas use letters A, B, C, etc. for CV Calculation Inputs. In the Configuration Menu, the inputs are identified as "Input 1" (IN1), "Input 2" (IN2), etc.

Also, the 3-letter codes ADD (Add), SUB (Subtract), MLT (Multiply), etc. are used to provide a "shorthand" notation to use when working with CV Calculations. Full (or slightly abbreviated) names are used in the configuration menus.

There are two classes of CV Calculations: Basic and Specialized. Because of processing time allocations, only two specialized CV Calculations may be configured at any one time. Use CV Calculations like building blocks for constructing formulas and equations.

EXAMPLE

To configure an average of all four inputs and trend it out on a Calculated Channel:

$$\frac{((CH1+CH2) + (CH3+CH4))}{4} = CH5$$

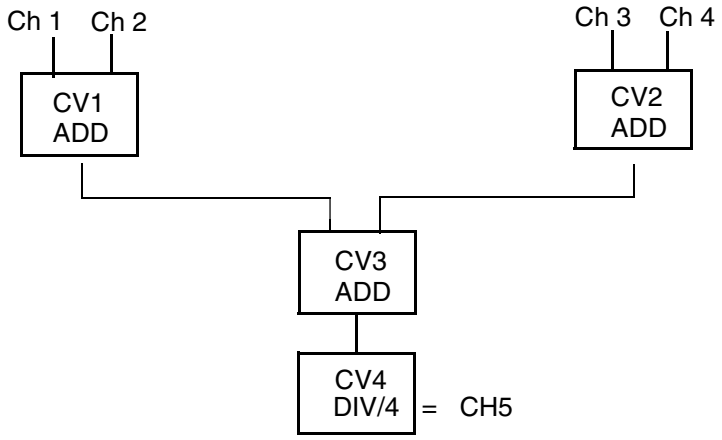

Individual CV Calculation Descriptions

OFF	Off - Used to run a CV off, all are initially in the Off state.
ADD	Add - (IN1 + IN2).
SUB	Subtract - (IN1 - IN2).
DIV	Divide - (IN1/IN2). When IN2 = 0, CV will be 99999.
MLT	Multiply - (IN1*IN2).
LIN	Lin. Slope - Linear function: (IN1 * IN2) + IN3 IN1 = variable IN2 = slope IN3 = offset
HSL	High Select - The value is the HIGHER of IN1 or IN2.
LSL	Low Select - The value is the LOWER of IN1 or IN2.
HPK	High Peak - The value is the highest value of IN1 measured since the function was reset. Reset by Action Equation (see Action Equations and Internal Triggers on page 179) is to the current input value. Will hold current value (not reset) on power loss.
LPK	Low Peak - The value is the lowest value of IN1 measured since the function was reset. Reset by Action Equation (see Action Equations and Internal Triggers on page 179) is to the current input value. Will hold current value (not reset) on power loss.
AVG	Average - Single Point Cumulative Average. The value IN1 is sampled every IN2 seconds (minimum 5 s - maximum 32767 s). The sample is then added to the cumulative total and divided by the cumulative number of samples. Since the number of samples is limited to 65536 (91 hours at 5 s/sample), this average is most useful for a batch rather than a continuous measurement. Reset by Action Equation (see Action Equations and Internal Triggers on page 179) or after 65536 samples is to current input value. Will hold current value (not reset) on power loss.
PLY	Polynomial - Third Order Polynomial curve fit: $B + C X A + D X A^2 + E X A^3$ IN1 = variable (A) IN2 = B IN3 = C IN4 = D IN5 = E

LOG	Log 10 - Log to the Base 10: [IN2 X Log(IN1)] IN1 = variable IN2 = scaling factor When IN1 = 0, CV will be -99999.
PWR	Power 10 - Power of 10: $(IN2 \times 10^{IN1})$ IN1 = variable IN2 = scaling factor When IN1 is greater than 30.0 or less than -30.0, CV will be 0000.0.
MFS	Mass Flow Sq. Rt. - (AGA 3 Gas Flow): $IN1 \quad \frac{(IN2 * IN3)^{1/2}}{(IN4 * IN5)}$ IN1 = (C) universal scaling constant IN2 = (h_w) differential pressure in inches of water IN3 = (p_F) static pressure in psia IN4 = (T_F) flowing temp in ° R IN5 = compressibility correction IN4 uses the output of an ADD CV, ° R=° F + 460. IN5 may use the output of a MUL CV, to include gravity compensation. When IN4 or IN5 = 0.0, CV will be 99999.
MFL	Flow Linr - Linear Mass Flow (AGA 3 Gas Flow): $IN1 \quad \frac{(IN2 \times IN3)}{(IN4 \times IN5)}$ All inputs and conditions are the same as for Square Root Mass Flow above.
STR	F_0 Value - Sterilization Constant: F_0 in minutes. $CV_1 + 0.01666666 \times 10^A$ $A = \frac{(IN1 - IN2)}{IN3}$ IN1 = input temperature IN2 = sterilizing temp IN3 = “z” value CV_1 = CV value from previous sample. RESET returns CV_1 to 0. When IN3 = 0, CV will be 99999.

REL	RH - Relative Humidity. The value is the% Relative Humidity. IN1 = wet bulb temperature (in °C) IN2 = dry bulb temperature (in °C) IN3 = atmospheric pressure (in BAR) IN4 = psychrometric constant Inputs *must* be in Metric Units. Use LIN CV's to convert, if needed.
ZIR	ZRO_2 Sensor - Zirconia Oxygen Probe. The value is the Partial Pressure of O_2: $\frac{IN1}{10^B}$ $B = \frac{IN2}{0.0496 * IN3}$ IN1 = partial pressure at electrode, in % IN2 = probe EMF, in mV IN3 = probe temperature, in °R(°F + 460) When IN3 = 0.0, CV will be 0.0.

Calculated Variable Examples

1. Two Transmitters on same flow for High/Low split range giving increased resolution and accuracy for low flows. Flow Transmitter No. 1 to function from 0 to 100 gal/min (GPM). Flow Transmitter No. 2 to function from 100 to 1000 GPM.

   CV1 Low Select - Input from Transmitter No. 1 cannot go <u>above</u> 100 when flow is greater than 100 GPM.

   CV2 High Select - Input from Transmitter No. 2 cannot go <u>below</u> 0.0 when flow is less than 100 GPM (making Scaled flow less than 0).

   CV3 Add - Adds the two scaled inputs. At full flow 900 + 100 = 1000.

   CH5 Chart Range = 0 - 1000 GPM. Source CV = CV3.

2. AGA 3 Mass Flow of Gas with Pressure and Temperature Compensation

   CV1 Multiply - Product is the combined effect of compressibility (Z) and specific gravity (G) changes.

   CV2 Add - Conversion of Temperature in °F to Absolute Temperature in °R by adding 460.

   CV3 Square Root Mass Flow -

   IN1 - Constant = C
   IN2 - Delta P measurement of Raw Flow in units/time
   IN3 - Static Pressure Input in psia
   IN4 - Flowing Temperature (absolute, from CV2)
   IN5 - Compressibility correction factor (from CV1)

Calcul'd Var.?
1

Use the UP/DOWN ARROW keys to select a CV Calculation. The optional Calculated Channel provide a total of *nine* CV Calculations.

CV Function

Use the UP/DOWN ARROW keys to select a CV Calculation function from the previous listing.

CV1 Input 1

Use the UP/DOWN ARROW keys to select: Input Channel, CV 1-9 or Constant.

CV1 Const.?

Use the UP/DOWN ARROW keys to select Inputs that have been chosen as Constants, above. Does not appear if no Constant chosen as CV Input.

CV1 Input 1
0 Mant.

A Constant is entered as a "powers of 10" number. These numbers are expressed by a numeric value Mantissa and an Exponent which determines the decimal point position. Use the UP/DOWN/SIDE ARROW keys to define the Constant Mantissa.

CV1 Input 1
C Exp.

Use the UP/DOWN/SIDE ARROW keys to define the Constant Exponent. Permitted values are from -30 to +30,

Example

The number 100 is expressed as:
1.000 x 103

The Mantissa = 1.000
The Exponent = 3 (moving the Mantissa decimal point three places to the right)

CV1 Rset Eq

Present only if a CV Output is Resettable (resettable types are: high peak, low peak, and average). Press ENTER to review or change the Action Equation that controls the reset.

```
CV1 Rset Eq P1
```

This Action Equation defines the Internal Triggers that will be used to Reset those CV Calculations such as High Peak, Average, etc., where the output is cumulative. Press ENTER to select.

```
CV1 Descript.
Your Selection
```

The CV Calculation Descriptor is a 16-character tag which appears above the current value when the CV is viewed using the Operator Menu. Enter the Descriptor using the UP/DOWN/SIDE ARROW keys (see Figure 16 for character set).

```
CV1 Units
?????
```

Use the UP/DOWN/SIDE ARROW keys to define up to a 5-character custom Units-of-Measure. See Figure 16 for library of alphanumeric characters.

```
Dec. Point
  XXXX.X
```

The currently selected Decimal Position is shown. The UP/DOWN ARROW keys move the Decimal Point that appears in the displayed value. These positions are selectable:

X.XXXX
XX.XXX
XXX.XX
XXXX.X
XXXXX.

If a value is to be displayed, the use of number positions to the right of the Decimal Point should be considered carefully. The use of multiple decimal positions can imply a reading accuracy beyond the sensor and/or recorder capability.

In multiple calculation applications, where the result of one CV becomes the source of input for another CV, choose the resolution of upstream values carefully to preserve the desired accuracy in the final calculation.

Also, the least significant (right end) digits will be the fastest changing digits. Multiple decimal positions may change so frequently as to make the display confusing to read.

Communications Description

Not yet available.

Communications Procedure

Not yet available.

Retransmission Configuration Description

Retransmission provides one to four isolated scalable outputs that are directly proportional to the linearized value of a measured or calculated channel. Output signals can be configured to be: 0 to 20 mA or 4 to 20 mA into 1000 ohms maximum.

Retransmission Configuration Procedure

Select Retransmission Number

Push	▲▼	Select: Retrans 1, 2, 3, or 4	Retrans? 1

Select Retransmission Source C

Push	**ENTER**	See:	RTR1 Source Controller 1
Push	▲▼	Select: Controller 1 or 2 Channel 1, 2, 3, 4, 5, or 6 C.V. 1 through 9 *Ramp Generator 1 *Ramp Generator 2	RTR1 Source E Your Selection
Push	**ENTER**	See:	RTR1 Source Your Selection

*Only with -G Option

(Continued)

Select Retransmission Outputt

Push	**CFG**	See:	RTR1 Out Ma 4 to 20
Push	▲▼ or ▶	Select: 4 to 20 mA or 0 to 20 mA	RTR1 Out Ma E Your Selection
Push	**ENTER**	See:	RTR1 Out Ma Your Selection

Select Low Output

Push	**CFG**	See:	RTR1 Low Out _0.0%
Push	▲▼ or ▶	Select: Low Output (limits are 0 to 999999999)	RTR1 Low Out E Your Selection
Push	**ENTER**	See:	RTR1 Low Out Your Selection

Select High Output

Push	**CFG**	See:	RTR1 High Out _100%
Push	▲▼ or ▶	Select: High Output (limits are 0 to 999999999)	RTR1 High Out E Your Selection
Push	**ENTER**	See:	RTR1 High Out Your Selection

Repeat this Procedure for each Retransmission Output

Push	**C**	Once: Returns to Retrans?	Repeat for each Retrans.
Push	**C**	Twice: Returns to RUN Mode.	

Instrument Alarms

The recorder has self-test software to monitor all critical operations. The Instrument Alarm symbol ("I") will appear on all Operating Displays only if there is a problem with the instrument.

Entry into the Instrument Alarm Menu (allowed only if there is an *instrument alarm* condition) is through either the last item in the Main Configure Menu *or* the last item in the Operator Menu.

Inst. Alarm?

To respond to an "I" Alarm, go to this display in the Instrument or Operator Menu and press ENTER to review the item(s) which may be causing it.

Instrument Alarm menu items are as follows (Use the CFG Key):

ROM Bad

The basic software PROM is checked during Reset (initialization) which occurs when the recorder is turned ON or when abnormal operation is detected by self-test software. Any change sets the Instrument Alarm. If "ROM Bad" is reported, call the manufacturer for service assistance.

Lost Data see list

Checks the integrity of stored configuration and calibration data. This test occurs at Reset and returns up to 17 messages covering different areas of data.

When the recorder determines that both the EEPROM <u>and</u> RAM memory for an item of configuration or calibration data have changed, it loads the default data from the system PROM and sets the Instrument Alarm.

If any data has been lost, one or more of the following items may be seen by pressing the CFG key. The following displays will appear <u>only</u> if their specific data does not pass the self-test.

***CAUTION**: Review <u>all</u> "Lost" displays using the <u>CFG Key Only</u>. Pressing ENTER twice while on <u>any</u> of these displays turns off the "Lost" displays and confirms to the recorder that <u>all</u> present configuration and calibration data is acceptable for use.*

---

*NOTE: When the main PWA or main PWA firmware is upgraded (i.e., certain options added), the Instrument Alarm will read "Lost Data." This means that the instrument has reset to default values and must be reconfigured. The user must push **ENTER** to confirm, the reconfigure the instrument*

.

INPUT PROG. X	Each Input Channel (1-4) is checked for lost Input Type and Hi/Lo Limits, Range Hi/Lo Limits, Units and CJC Type. See Channel (1 to 4) Configuration Procedure on page 74 and Channel (5 and 6) Configuration Procedure on page 79 for Channel Configuration information.
INPUT CAL. X	Each Input Channel (1-4) is checked for lost Calibration data. See Communications Procedure on page 116 for Calibration information.
FACTORY CAL. X	Each Input Channel (1-4) is checked for lost Factory Calibration data. If "Factory Cal." is reported, call the manufacturer for service assistance.
CJC CAL. X	The Input Card is checked for Cold Junction Compensation Calibration data. See Range, Input, and Chart Span Notes Relating to Channel Configuration on page 82 and Instrument Configuration (Common to All Channels) Procedure on page 85 for CJC calibration information.
CHAN. PROG. X	Each Channel (1-6) is checked for lost Chart Hi/Lo Limits, Annotation Choice, and Interpolation. See Channel (1 to 4) Configuration Procedure on page 74 and Channel (5 and 6) Configuration Procedure on page 79 for Channel configuration information.
CHART PROG	The calibration of the pens is checked. See Communications Procedure on page 116 for information.
CHANNEL ADJ. X	Each channel (1-4) is checked for loss of Channel Adjust settings. See Channel (1 to 4) Configuration Procedure on page 74 and Channel (5 and 6) Configuration Procedure on page 79 for Channel Adjust configuration information.
CHANNEL DESC. X	Each channel (1-6) is checked for loss of the Channel Descriptor. See Channel (1 to 4) Configuration Procedure on page 74 and Channel (5 and 6) Configuration Procedure on page 79 for Channel Descriptor configuration information.
ALARM PROG. XX	Each Alarm (A11-A64) is checked for loss of configuration data. See Alarm Configuration Description on page 92 and Alarm Configuration Procedure on page 94 for Alarm configuration information.
ALARM MSG. XX	Each Alarm Message (A11-A64) is checked for any change in text. See Sections Alarm Configuration Description on page 92 and Alarm Configuration Procedure on page 94 for Alarm configuration information.
CUSTOM CURVE	All data for the Custom Curve is checked. See Instrument Menu, Range, Input, and Chart Span Notes Relating to Channel Configuration on page 82 and Instrument Configuration (Common to All Channels) Procedure on page 85, for Custom Curve configuration information.

RELAY PROG. XX	Each Relay (1-8) configuration is checked. See Relay Output Description on page 96 and Relay Output Configuration Procedure on page 97 for Relay configuration information.
CV PROG. X	Each Calculated Variable (CV 1-9) is checked. See Communications Description on page 116 for Calculated Variable configuration information.
TOTALIZER X	Each Totalizer (1-4) is checked for configuration data changes. See Totalizer Configuration Description on page 99 and Totalizer Configuration Procedure on page 100 for Totalizer configuration information.
TIMER X	All four Timers are checked. See Timer Configuration Procedure on page 107 and Calculated Variable Configuration Menu on page 109 for Timer configuration information.
MISC. PROG	Not used.

NOTE: Although highly unlikely, it is possible to configure a sufficiently large number of time-based functions, that under certain operating conditions, the processing capability of the 740C Controller may be overloaded. Users will be alerted to this condition by the appearance of the Symbol "P" on the display. Although an occasional brief overload condition may not seriously affect performance, it is recommended that some of the high demand, time-based functions such as rate of change alarms, exponential linearization, etc., be deconfigured to eliminate this condition.

Controller Configuration Description (740C Only)

NOTES:

1. All configuration, wiring, and jumper movement for Channel, Instrument, Alarms, Totalizers, etc. should be completed before configuring Control functions.

2. Analog output requires wiring to the Retransmission PWA. Refer to the wiring section for this information.

3. Relay output requires wiring to the Relay PWA. Refer to the wiring section for this information.

The 740C offers two types of output, analog and relay.

Analog output is connected through the retransmission PWA and is available as a 0 to 20 mA or 4 to 20 mA signal. Analog output is used to drive continuous end elements such as control valves.

Relay output is connected through the relay PWA and is available for timed ON/OFF control. A percentage output value is converted to a percentage of cycle rate time period. The output value determines the amount of time that the output in ON. Relay output is used to drive such end elements as heater coils.

Example

A one minute cycle rate with a 25% output value will be ON for 15 seconds and OFF for 45 seconds (15s/60s = 25%). Each side of a duplex duration output can have a different cycle rate.

Each control loop may have a single or duplex (dual) output. Duplex outputs can be both analog and relay, or one of each, depending on the end element connected. A duplex output involves driving two physical outputs with one control loop. The output value normally ranges from -100% to +100%. This method allows the controller to retain its 0.1% output resolution for the full 200% duplex output span.

Example

Figure 37 shows how two duplex outputs can be scaled to overlap (both outputs are active near zero for more precise control). Also shown is the setting of a deadband between the two outputs by scaling the low ends away from zero.

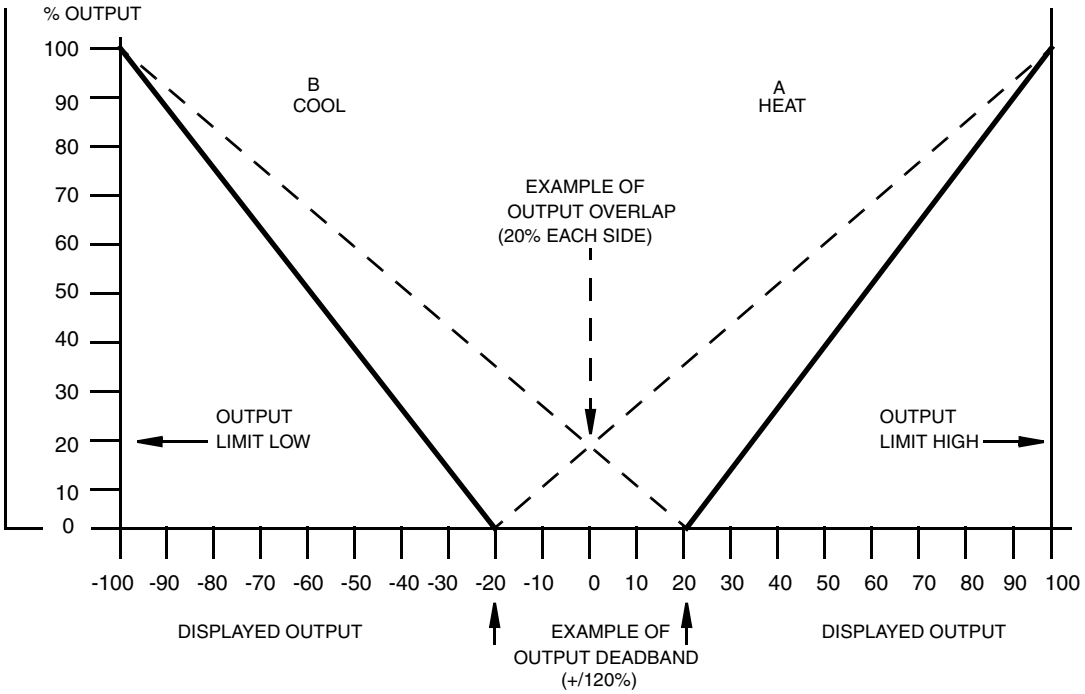

Figure 37. Duplex Operation

Controller Configuration Procedure (740C Only)

Select Controller Number

Push	▲▼	Select: Controller 1 or 2	Controller? 1

Select Local Setpoint)

Push	**ENTER**	See:	CR1 Settings?
Push	**ENTER**	See:	CR1 Local SP _0.00 °F
Push	▲▼ or ▶	Type: Value for Local Setpoint	CR1 Local SP E Your Selection
Push	**ENTER**	See:	CR1 Local SP Your Selection

Select Manual Output)

Push	**CFG**	See:	CR1 Manual Out _0.0%
Push	▲▼ or ▶	Type: Manual Output Value	CR1 Manual Out E Your Selection
Push	**ENTER**	See:	CR1 Manual Out Your Selection

(Continued)

Select Manual Bias)

Push	**CFG**	See:	CR1 Man Bias _0.0 %
Push	▲▼ or ▶	Type: Value for Manual Bias (Limits are 0 to 999999999)	CR1 Man Bias E Your Selection
Push	**ENTER**	See:	CR1 Man Bias Your Selection
Push	**C**	See:	CR1 Settings

Select Primary Proportional Band)

Push	**CFG**	See:	CR1 Man Bias
Push	**ENTER**	See:	CR1 Pri PF _100.0 %
Push	▲▼ or ▶	Type: Value for Primary Proportional (0.1 to 2000)	CR1 Pri PF E Your Selection
Push	**ENTER**	See:	CR1 Pri PF Your Selection

Select Primary Integral)

Push	**CFG**	See:	CR1 Pri IF _1.0 min
Push	▲▼ or ▶	Type: Value for Primary Integral (0.01 to 999.90)	CR1 Pri IF E Your Selection
Push	**ENTER**	See:	CR1 Pri IF Your Selection

(continued)

Select Primary Derivative)

Push	**CFG**	See:	CR1 Pri DF _0.00 min
Push	▲▼ or ▶	Type: Value for Primary Derivative (Limits are 0 to 99.99)	CR1 Pri DF E Your Selection
Push	**ENTER**	See:	CR1 Pri DF Your Selection
Push	**C**	See:	CR1 Pri. Tune?

Select Remote Set Point Ratio)

Push	**CFG**	See:	CR1 Remote SP?
Push	**ENTER**	See:	CR1 RSP Ratio _1.00
Push	▲▼ or ▶	Type: Value for RSP Ratio (Limits are 0 to 10)	CR1 RSP Ratio E Your Selection
Push	**ENTER**	See:	CR1 RSP Ratio Your Selection

Select Remote Setpoint Bias)

Push	**CFG**	See:	CR1 RSP Bias _0.00 °F
Push	▲▼ or ▶	Type: Value for RSP Bias	CR1 RSP Bias E Your Selection
Push	**ENTER**	See:	CR1 RSP Bias Your Selection

(continued)

Select Remote Setpoint Source)

Push	**CFG**	See:	CR1 Rem SP Src Channel 3
Push	▲▼	Select: Off Channel 1, 2, 3, 4, 5, or 6 C.V. 1 through 9 *Ramp Generator 1 *Ramp Generator 2	CR1 Rem SP Src E Your Selection
Push	**ENTER**	See:	CR1 Rem SP Scr Your Selection
Push	**C**	See:	CR1 Remote SP?

*Only with -G Option

Select Alternate Proportional Band)

Push	**CFG**	See:	CR1 Alt. Tune?
Push	**ENTER**	See:	CR1 Alt PF _100.0 %
Push	▲▼ or ▶	Type: Value for Alt. Proportional (0.1 to 2000)	CR1 Alt PF E Your Selection
Push	**ENTER**	See:	CR1 Alt PF Your Selection

Select Alternate Integral)

Push	**CFG**	See:	CR1 Alt IF _1.0 min
Push	▲▼ or ▶	Type: Value for Alt. Integral (0.01 to 999.90)	CR1 Alt IF E Your Selection
Push	**ENTER**	See:	CR1 Alt IF Your Selection

(continued)

Select Alternate Derivative

Push	**CFG**	See:	CR1 Alt DF _0.00 min
Push	▲▼ or ▶	Type: Value for Alt. Derivative (Limits are 0 to 99.99)	CR1 Alt DF E Your Selection
Push	**ENTER**	See:	CR1 Alt DF Your Selection

Select Alternate Source)

Push	**CFG**	See:	CR1 Alt Source Off
Push	▲▼	Select: Off, process variable setpoint, deviation or output sign	CR1 Alt Source E Your Selection
Push	**ENTER**	See:	CR1 Alt Source Your Selection
Push	**C**	See:	CR1 Alt. Tune?

Default Control Loop Setups

740C Controllers have a feature called *Default*. Default is a means of selecting a preconfigured control loop type. Once selected, the values in the loop type may be altered to match user values. The intent of the *Default* loop type is to simplify controller configuration.

Single loop controllers have eight preconfigured loop types to choose from. Instruments with two controllers have two additional loop types for cascade applications.

Table 1 shows the 10 control loop types. The associated **controller type worksheet and notes** are very important because of specific changes made to the normal default values of the basic instrument.

To select a the loop type, follow the procedure below.

Select Default Controller Loop Type)

Push	**CFG**	See:	CR1 Defaults?
Push	**ENTER**	See:	Control Type 1 ENTER to confirm
Push	**CFG**	Select: Default Type 1 through 10	Control Type X ENTER to confirm
Push	**ENTER**	See: Controller is configuring to your selection	Control Type X Wait
Push		See: After approx. 60 seconds Default is loaded	CR1 Default?

(SEE NOTES)

Push C once returns the display to CR1 Default?

Push C twice returns the display to Controller?

Push C three Times returns display to Run.

Table 1. Control Type Default Configurations

Type Number	Description of Loop
1	Single analog output, INC/DEC

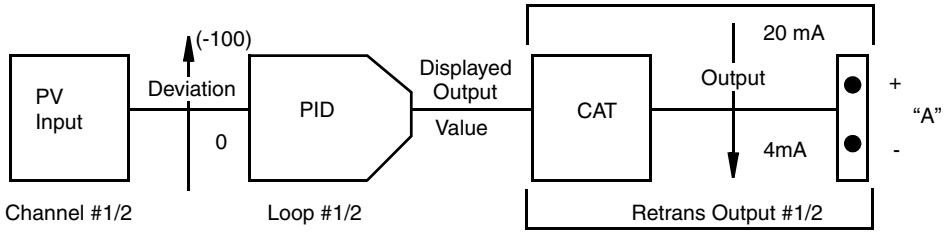

2	Single relay output, INC/DEC

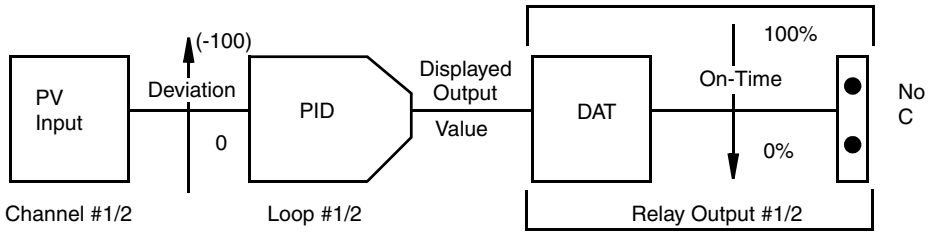

3	Single analog output, INC/INC

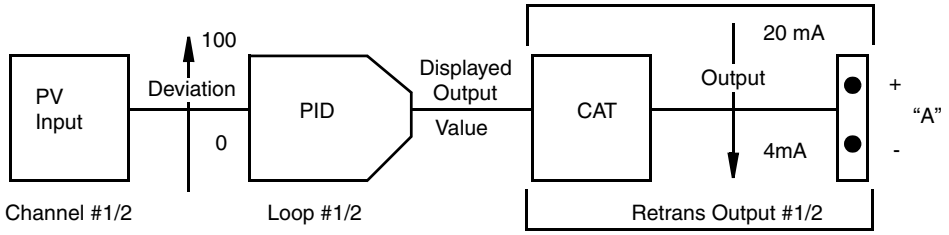

4	Single relay output, INC/INC

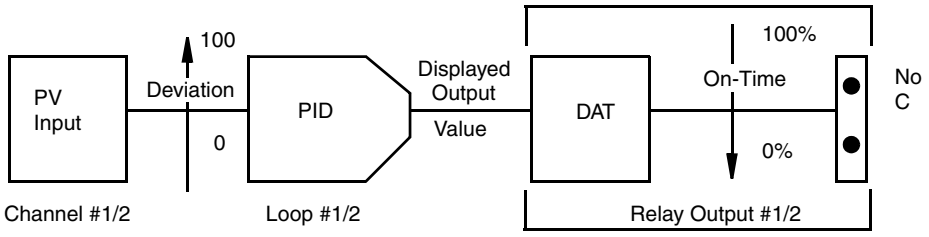

Table 2. Control Type Default Configurations (Continued)

Type Number	Description of Loop
5	Duplex analog output, INC/DEC

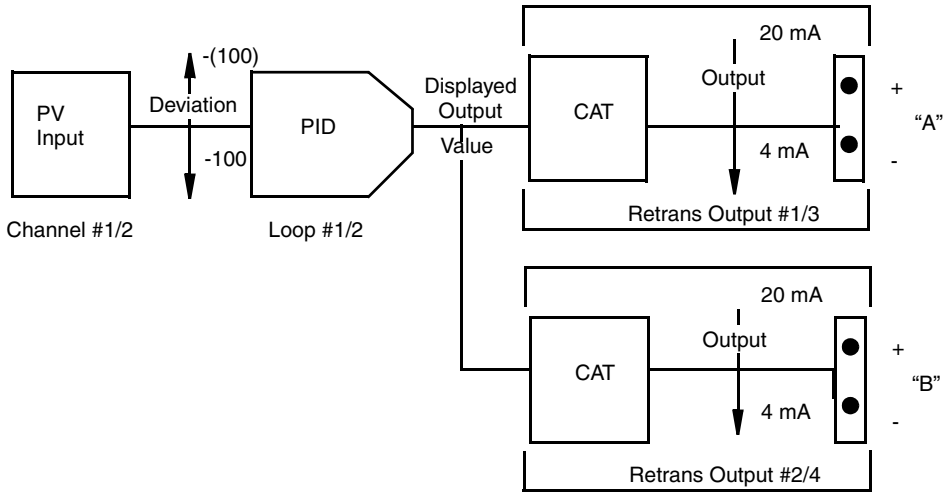

6	Duplex relay output, INC/DEC

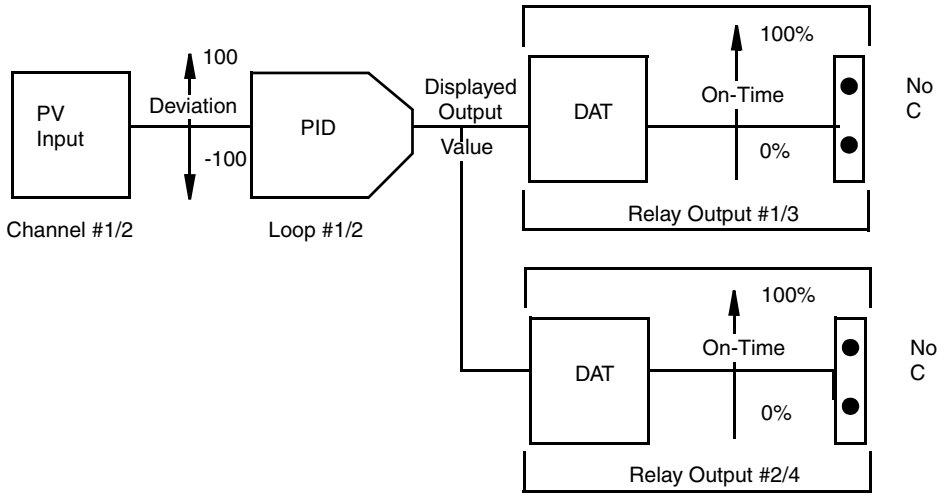

Table 2. Control Type Default Configurations (Continued)

Type Number	Description of Loop
7	Duplex analog output, INC/INC

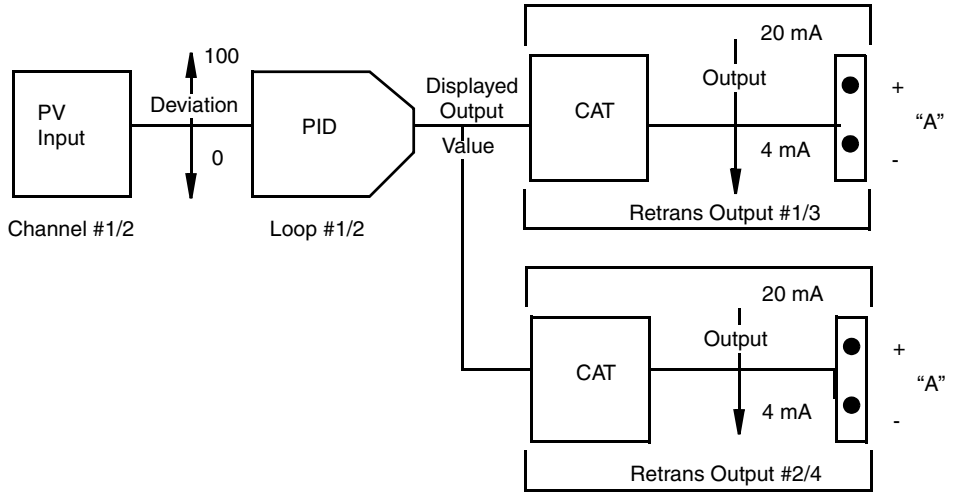

8	Duplex relay output, INC/INC

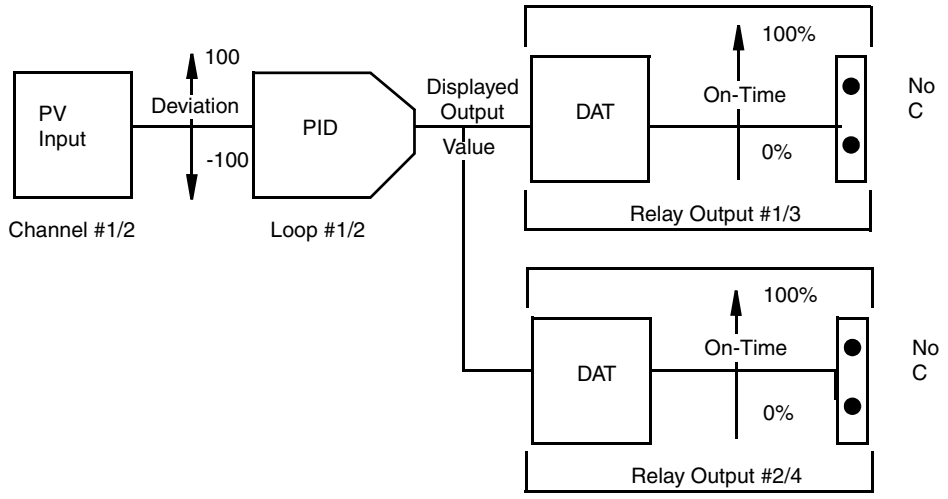

Table 2. Control Type Default Configurations (Continued)

Type Number	Description of Loop
9	Cascade analog output, INC/DEC (two controllers only)

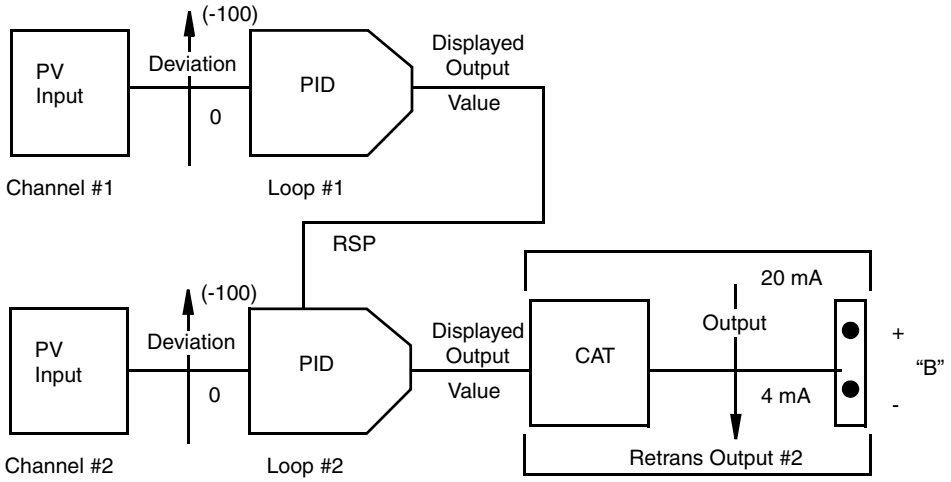

10	Cascade relay output, INC/DEC (two controllers only)

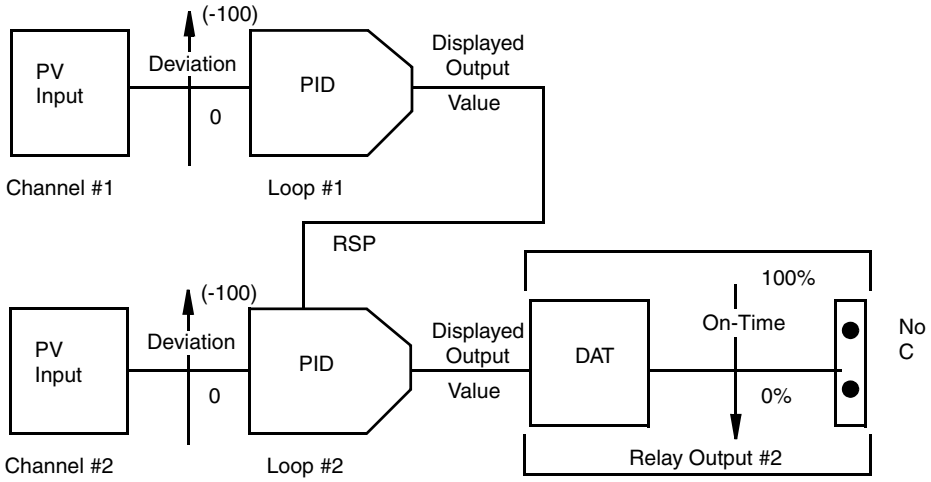

Controller Type Configuration Worksheet And Notes

Controller Mode Menu Parameters	Factory Setting (Default		User Settings Controller 1	User Settings Controller 2
Setpoints				
Local Setpoint	_0.00	units	_____	_____
Manual Output	_0.0	%	_____	_____
Manual Bias	_0.0	%	_____	_____
Primary Tuning				
Pri Proportional	_100.0	%	_____	_____
Pri Integral	_1.0	min	_____	_____
Pri Derivative	_0.00	min	_____	_____
Remote Setpoint				
RSP Ratio	_1.00		_____	_____
RSP Bias	_0.00	units	_____	_____
RSP Source	Channel 3		_____	_____
if cascade	Controller 1		_____	_____
Alternate Tuning				
Alt Proportional	_100.0	%	_____	_____
Alt Integral	_1.0	min	_____	_____
Alt Derivative	_0.00	min	_____	_____
Alt Source	Off		_____	_____
Default Type	Type 1		_____	_____
Limits				
Input Low	_0.00	units	_____	_____
Input High	_100.0	units	_____	_____
SP Low	_0.00	units	_____	_____
SP High	_100.00	units	_____	_____
Output Low	_0.0	%	_____	_____
Output High	_100.0	%	_____	_____
Cutback Low	-100.0	units	_____	_____
Cutback High	_100.0	units	_____	_____
Alt Trp Low	_0.00	units	_____	_____
Alt Trp High	_100.00	units	_____	_____
FFWD Low	_0.00	units	_____	_____
FFWD High	_100.00	units	_____	_____
Program Loop				
SP Track	Off		_____	_____
Measurement Source	*Channel 1/2		_____	_____

Controller Type Configuration Worksheet And Notes

Controller Mode Menu Parameters	Factory Setting (Default		User Settings Controller 1	User Settings Controller 2
FFWD Sourc	Off		_____	_____
Cutback	Off		_____	_____
Control Access	On		_____	_____
EX Enable	On		_____	_____
Manual Output Action Equation			_____	_____
LSP Action Equation			_____	_____
Controller Output				
Direction	See Output Type		_____	_____
Output Type	Single		_____	_____
A Cyl Rate	_10	sec/c	_____	_____
B Cyl Rate	_10	sec/c	_____	_____
DAT A Low	_0.0	%	_____	_____
DAT A High	_100.0	%	_____	_____
DAT B Low	_0.0	%	_____	_____
DAT B High	-100.0	%	_____	_____
Slew Rate	9999	%/min	_____	_____
Program Alarm				
Dev Low	-100.00	units	_____	_____
Dev High	100.00	units	_____	_____
DEV Hysteresis	0.00	units	_____	_____

*Channel 1 for Loop 1
*Channel 2 for Loop 2

NOTES:

1. There is no default setting for the control type "DEFAULT" menu.

2. If an analog default configuration is selected, the retransmission output choices are automatically made for you and the necessary functional connections between the retransmission PWA and the control loop are made. If a relay default configuration is selected, the output choices are also automatically made for you but the necessary functional connections are between relay 1 and control loop 1. If a default configuration is not selected, the retransmission output choices must be made manually in the retransmission menu or relay menu, thus making the necessary functional connections between the retransmission PWA or relay and the control loop.

3. For a single analog output default choice, the functional connection is between retransmission 1 and control loop 1.

4. For two single analog output (two single controllers) default choices, the functional connection is between retransmission 1 and control loop 1, and between retransmission 2 and control loop 2.

5. A duplex analog output default choice functionally connects retransmission 1 and 2 to control loop 1, and retransmission 3 and 4 to control loop 2.

6. For a single relay output default choice, the functional connection is between relay 1 and control loop 1.

7. For two single relay output (two single controllers) default choices, the functional connection is between relay 1 and control loop 1, and between relay 2 and control loop 2.

8. A duplex relay output default choice functionally connects relays 1 and 2 to control loop 1 and relays 3 and 4 to control loop 2.

Select Input Low

Push	**CFG**	See:	CR1 Limits?
Push	**ENTER**	See:	CR1 Input Low _0.00 °F
Push	▲▼ or ▶	Type: Value for Low Input	CR1 Input Low E Your Selection
Push	**ENTER**	See:	CR1 Input Low Your Selection

Select Input High

Push	**CFG**	See:	CR1 Input High _100.00 °F
Push	▲▼ or ▶	Type: Value for High Input	CR1 Input High E Your Selection
Push	**ENTER**	See:	CR1 Input High Your Selection

(continued)

Select Setpoint Low

Push	**CFG**	See:	CR1 SP Low _0.00 °F
Push	▲▼ or ▶	Type: Value for Low Setpoint	CR1 SP Low E Your Selection
Push	**ENTER**	See:	CR1 SP Low Your Selection

Select Setpoint High

Push	**CFG**	See:	CR1 SP High _100.00 °F
Push	▲▼ or ▶	Type: Value for High Setpoint	CR1 SP High E Your Selection
Push	**ENTER**	See:	CR1 SP High Your Selection

Select Low Output

Push	**CFG**	See:	CR1 Output Lo _0.00 °F
Push	▲▼ or ▶	Type: Value for Low Output	CR1 Output Lo E Your Selection
Push	**ENTER**	See:	CR1 Output Lo Your Selection

Select High Output

Push	**CFG**	See:	CR1 Output Hi _100.00 °F
Push	▲▼ or ▶	Type: Value for High Output	CR1 Output Hi E Your Selection
Push	**ENTER**	See:	CR1 Output Hi Your Selection

(continued)

Select Low Cutback

Push	**CFG**	See:	CR1 Cutback Lo _100.00 °F
Push	▲▼ or ▶	Type: Value for High Setpoint	CR1 SP High E Your Selection
Push	**ENTER**	See:	CR1 SP High Your Selection

Select High Cutback

Push	**CFG**	See:	CR1 SP High _100.00 °F
Push	▲▼ or ▶	Type: Value for High Setpoint	CR1 SP High E Your Selection
Push	**ENTER**	See:	CR1 SP High Your Selection

The CUTBACK feature helps balance the process at its operating point faster than normal PID allows from a startup condition. It does this by automatically setting a temporary INTEGRAL value in place of the one set in the Primary Integral Menu. Cutback permits setting a long integral time for a slow process, yet still allows the process to start up as quickly as possible. Cutback also prevents overshoot during startup. This feature is turned on or off in the Program Loop portion of the control menu.

Select Low Alternate Trip Value

Push	**CFG**	See:	CR1 Alt Trp Lo _0/00 °F
Push	▲▼ or ▶	Type: Value for Low Alternate	CR1 Alt Trp Lo E Your Selection
Push	**ENTER**	See:	CR1 Alt Trp Lo Your Selection

(continued)

Select High Alternate Trip Value

Push	**CFG**	See:	CR1 Alt Trp Hi _100.00 °F
Push	▲▼ or ▶	Type: Value for High Alternate	CR1 Alt Trp Hi E Your Selection
Push	**ENTER**	See:	CR1 Alt Trp Hi Your Selection

These values determine the low and high values beyond which the second (alternate) set of tuning parameters become active (trip) when alternate tuning is turned on. This feature is turned on or off in the "Program Loop" menu. There is a 2% on/off hysteresis.

Select Feedforward Low

Push	**CFG**	See:	CR1 FFwd Lo _0.00 °F
Push	▲▼ or ▶	Type: Value for Low FFwd	CR1 FFwd Lo E Your Selection
Push	**ENTER**	See:	CR1 FFwd Lo Your Selection

Select Feedforward High

Push	**CFG**	See:	CR1 FFwd High _100.00 °F
Push	▲▼ or ▶	Type: Value for High FFwd	CR1 FFwd High E Your Selection
Push	**ENTER**	See:	CR1 FFwd High Your Selection
Push	**CLEAR**	See:	CR1 Limits?

Each control loop may use any input source, calculated channel, or a calculated variable as an input for a feedforward signal. These signals are applied directly to the loop output. The signal is scaled providing a 0 to 100% value to work with the loop output of 0 to 100%. The feedforward component of the output is included in the bumpless transfer algorithm. Feedforward has no effect during manual operation.

Turn Setpoint Tracking ON or OFF

Push	**CFG**	See:	CR1 Prog Loop?
Push	**ENTER**	See:	CR1 SP Track Off
Push	▲▼	Type: On or Off	CR1 SP Track E Your Selection
Push	**ENTER**	See:	CR1 SP Track Your Selection

Setpoint tracking can be independently enabled for each loop. This feature causes the local setpoint of a loop to follow the process value of that loop when the loop is in manual. When setpoint tracking is enabled, the local setpoint can only be adjusted when the loop is in automatic mode. Setpoint tracking insures that the transfer from manual to auto is done in balanced conditions.

Select Measurement (PV, Process Value) Source

Push	**CFG**	See:	CR1 PV Source Channel 1
Push	▲▼	Select: Channel 1 through 6 Calculated Variable 1 through 9	CR1 PV Source E Your Selection
Push	**ENTER**	See:	CR1 PV Source Your Selection

Select Feedforward Signal Source

Push	**CFG**	See:	CR1 FFwd Src Off
Push	▲▼	Select: Off Channel 1 through 6 Calculated Variable 1 through 9	CR1 FFwd Src E Your Selection
Push	**ENTER**	See:	CR1 FFwd Src Your Selection

(continued)

Turn Cutback Feature On or Off

Push	**CFG**	See:	CR1 Cutback? Off
Push	▲▼	Select: On or Off	CR1 Cutback E Your Selection
Push	**ENTER**	See:	CR1 Cutback Your Selection

Enable Controller Access to an Operator

Push	**CFG**	See:	CR1 Ct1 Access On
Push	▲▼	Select: On or Off	CR1 Ct1 Access E Your Selection
Push	**ENTER**	See:	CR1 Ct1 Access Your Selection

Turning this feature on allows an Operator to manipulate the following parameters from the Operator Menu Structure:

Settings
Primary Tuning
Remote Setpoint
Alternate Tuning

Enable EXACT Tuning (If you did not purchase EXACT, no menu appears.)

Push	**CFG**	See:	CR1 EX Enable? On
Push	▲▼	Select: On or Off	CR1 EX Enable E Your Selection
Push	**ENTER**	See:	CR1 EX Enable Your Selection

EXACT must be enabled "on" in this menu to make EXACT Configuration Menus accessible. This does not turn EXACT on nor does this make EXACT accessible to an operator. Those functions are performed with the EXACT Menu.

When two controllers are present in the 740C, and each controller has EXACT, the "EXACT Enable" selection affects EXACT execution rate. See "EXACT Configuration Data" on page 157 for more detail.

Assign ACTION EQUATION TRIGGER CODES for Manual Output Action

("Action Equations and Internal Triggers" on page 179 explains ACTION EQUATIONS AND INTERNAL TRIGGERS.)

Push	**CFG**	See:		CR1 Man Act Eq
Push	**ENTER**	See:		CR1 Man Act P 1 ---, , , ,
Push	▲▼ or ▶	Select:	As many trigger codes as necessary to complete your Action Equation. If you use more than 4 codes, push ENTER after the fourth code, then CFG to move to the next page (P2). Push ENTER when complete.	CR1 Local SP E Your Selection
Push	**C**	See:		CR1 Man Act Eq Your Selection

The ACTION EQUATION TRIGGERS selected in this menu are used to force a control loop to manual.

Assign ACTION EQUATION TRIGGER CODES for Local Setpoint Action

("Action Equations and Internal Triggers" on page 179 explains ACTION EQUATIONS AND INTERNAL TRIGGERS.)

Push	**CFG**	See:		CR1 LSP Act Eq
Push	**ENTER**	See:		CR1 LSP Act P 1 ---, , , ,
Push	▲▼ or ▶	Select:	As many trigger codes as necessary to complete your Action Equation. If you use more than 4 codes, push ENTER after the fourth code, then CFG to move to the next page (P2). Push ENTER when complete.	CR1 LSP Act P 1 E Your Selection
Push	**C**	See:		CR1 LSP Act Eq Your Selection
Push	**C**	See:		CR1 Prog Loop?

The ACTION EQUATION TRIGGERS selected in this menu are used to force a control loop from Remote to Local Setpoint.

Select Controller Direction

Push	**CFG**	See:		CR1 Cntrl Out?
Push	**ENTER**	See:		CR1 Direction Inc/Dec
Push	▲▼	Select:	Inc/Dec or Inc/Inc	CR1 Direction E Your Selection
Push	**ENTER**	See:		CR1 Direction Your Selection

Select Output Type (single or duplex)

Push	**CFG**	See:	CR1 Out Type? Single
Push	▲▼	Select: Single or Duplex	CR1 Out Type E Your Selection
Push	**ENTER**	See:	CR1 Out Type Your Selection

Select Relay "ON" Time for Relay A

Push	**CFG**	See:	CR1 A Cyc Rate _10 sec/c
Push	▲▼ or ▶	Type: Value for Relay "ON" Time	CR1 A Cyc Rate E Your Selection
Push	**ENTER**	See:	CR1 A Cyc Rate Your Selection

Select Relay "ON" Time for Relay B

Push	**CFG**	See:	CR1 B Cyc Rate _10 sec/c
Push	▲▼ or ▶	Type: Value for Relay "ON" Time	CR1 B Cyc Rate E Your Selection
Push	**ENTER**	See:	CR1 B Cyc Rate Your Selection

Relay output operates by turning the output relay on for different periods of time based on the output signal from the control loop. The basic relay output is defined as the percent of "ON" (seconds per cycle) time during a cycle.

<u>Example:</u>

A one-minute cycle (60 seconds) with 25% output will be ON for 15 seconds and OFF for 45 seconds.

Select Relay A Output Low Scaling Value

Push	**CFG**	See:	CR1 DAT A Low _0.0%
Push	▲▼ or ▶	Type: Value for Low Scaling	CR1 DAT A Low E Your Selection
Push	**ENTER**	See:	CR1 DAT A Low Your Selection

Select Relay A Output High Scaling Value

Push	**CFG**	See:	CR1 DAT A High _100.0%
Push	▲▼ or ▶	Type: Value for High Relay Scaling	CR1 DAT A High E Your Selection
Push	**ENTER**	See:	CR1 DAT A High Your Selection

Relay outputs may be scaled to respond as required to the 0 to 100% controller output signal. A normal unscaled output would have a low of 0% and a high of 100%, and would track the displayed controller output directly. An example of scaling would be a relay output of 25% to 75% representing a controller output of 0 to 100%.

Select Relay B Output Low Scaling Value

Push	**CFG**	See:	CR1 DAT B Low _0.0%
Push	▲▼ or ▶	Type: Value for Low Scaling	CR1 DAT B Low Your Selection
Push	**ENTER**	See:	CR1 DAT B Low Your Selection

(Continued)

Select Relay B Output High Scaling Value

Push	**CFG**	See:	CR1 DAT B High _100.0%
Push	▲▼ or ▶	Type: Value for High Relay Scaling	CR1 DAT B High E Your Selection
Push	**ENTER**	See:	CR1 DAT B High Your Selection

Relay outputs may be scaled to respond as required to the 0 to 100% controller output signal. A normal unscaled output would have a low of 0% and a high of 100%, and would track the displayed controller output directly. An example of scaling would be a relay output of 25% to 75% representing a controller output of 0 to 100%.

Select Slew Rate

NOTE: For EXACT to Run properly, the slew rate must be 9999%/min (Default Value) or Off (0%/min).

Push	**CFG**	See:	CR1 Slew Rate 9999%/min
Push	▲▼ or ▶	Type: Value for Slew	CR1 Slew Rate E Your Selection
Push	**ENTER**	See:	CR1 Slew Rate Your Selection
Push	**CLEAR**	See:	CR1 Cntrl Out? Y

SLEW retards the rate of change of the controller output signal. This is sometimes necessary when the control element would be damaged if it were actuated too rapidly.

Express slew rate in percent of output per minute. A 20% setting means that an unscaled output would take five minutes from process upset to 100% response.

Select Deviation Alarm Low

Push	**CFG**	See:	CR1 Prog Alrm?
Push	**ENTER**	See:	CR1 Dev. Low -100.00 °F
Push	▲▼ or ▶	Type: Value for Low Deviation Alarm	CR1 Dev. Low E Your Selection
Push	**ENTER**	See:	CR1 Dev. Low Your Selection

Select Deviation Alarm High

Push	**CFG**	See:	CR1 Dev. High _100.00 °F
Push	▲▼ or ▶	Type: Value for High Deviation Alarm	CR1 Dev. High E Your Selection
Push	**ENTER**	See:	CR1 Dev. High Your Selection

Select Deviation Alarm Hysteresis

Push	**CFG**	See:	CR1 Dev. Hys.? _0.00 °F
Push	▲▼ or ▶	Type: Value for Slew	CR1 Dev. Hys E Your Selection
Push	**ENTER**	See:	CR1 Dev. Hys Your Selection
Push	**C**	See:	CR1 Prog Alrm?

Press C again to return to Controller?

Press C again to return to RUN. The deviation alarm provides for an alarm signal whenever the deviation from setpoint reaches a predetermined value. The low and the high alarm levels need not be the same. If a deviation alarm resets exactly on its setpoint, it can cycle into and out of alarm frequently with only slight changes in measurement. The Hysteresis setting prevents this from happening by establishing a number of units by which the measurement must pass the setpoint before the deviation alarm resets.

Ramp Generator Description

General

The purpose of a ramp generator (RG) is to force a preprogrammed chain of events using time versus selected values (see Figure 38, Time/Temperature used as an example). The 740 ramp generator option provides an electronic substitute for mechanical cam set instruments that performed the ramp function. This ramp generator furnishes two output traces (the equivalent of cam followers), one timer that is common to both traces, and eight on/off event states (the equivalent of cam tabs). Output of the trace is through the retransmission option. Output of the event states is through the relay option. The ramp generator may, however, be used without any physical output wiring, either as a remote setpoint or as an input to a calculated variable. Pen assignment, if desired, is done through the retransmission output plus wiring the retransmission output to the desired channel input (see wiring section). Assignment may also be accomplished via CV, Channel 5 or 6.

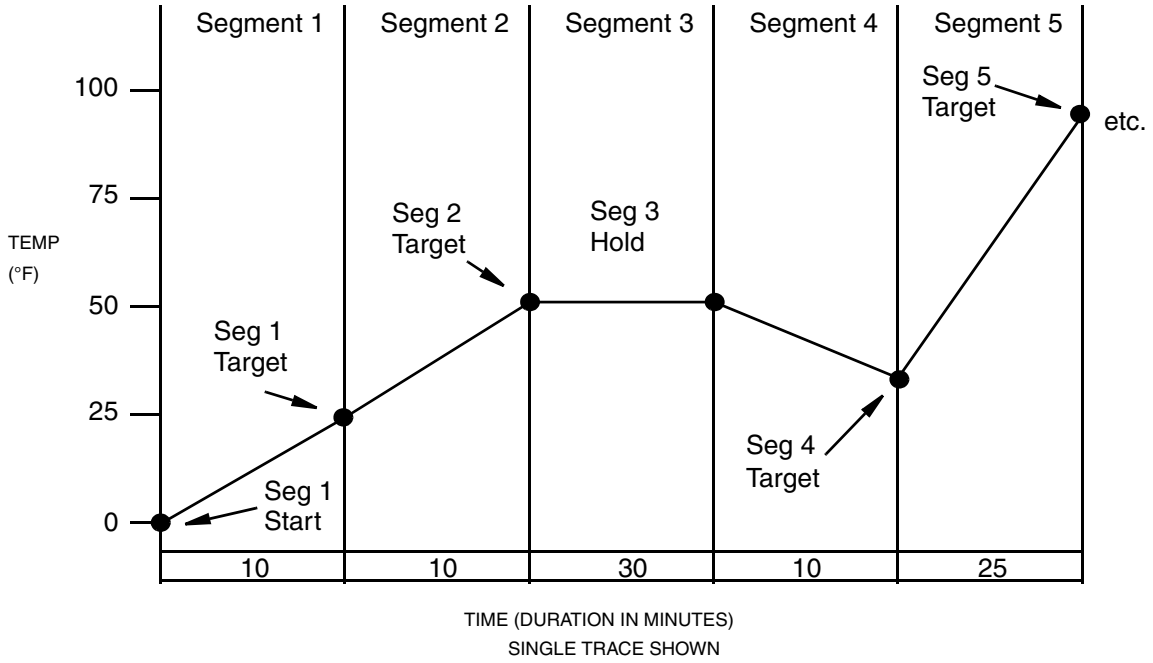

Figure 38. Time/Temperature Ramp

Configuration

The ramp generator is configured by creating a recipe (program). A recipe is a sequential group of segments (see the Ramp Generator Configuration Worksheet). Segments are the specific portions of the preprogrammed chain of events where segment types are assigned. There are four segment types to choose from, each defining specific functions. Up to 20 segments may be used for a recipe. Up to four recipes may be written per 740.

Successful ramp generator configuration is accomplished by creating your own process specific recipe. Use the Ramp Generator Configuration Worksheet to create your recipe; then enter those settings into the appropriate menu as outlined in Procedures.

Ramp Generator Configuration Worksheet

Initial Conditions

Trace 1 Decimal Point X X X X X
Trace 1 Initial Source _____
Trace 1 Initial Value _____
Trace 2 Decimal Point X X X X X
Trace 2 Initial Source _____
Trace 2 Initial Value _____

Recipe No. _____

Recipe Name _____

Total Run Time _____

Recipe Segments

			Target Segments				Repeats	Cycle Segments	
Segment No.	Trace No.	Segment Type	Starts From	Target Value	Segment Duration	Events On/Off	Repeat to Segment	Cycle to Segment	Cycle Repeats
1	1								
	2								
2	1								
	2								
3	1								
	2								
4	1								
	2								
5	1								
	2								
6	1								
	2								
7	1								
	2								
8	1								
	2								
9	1								
	2								
10	1								
	2								
11	1								
	2								
12	1								
	2								
13	1								
	2								
14	1								
	2								
15	1								
	2								
16	1								
	2								
17	1								
	2								
18	1								
	2								
19	1								
	2								
20	1								
	2								

Segment Types: Target, Repeat, Cycle, End.

Ramp Generator Terminology

Segment Types

Target Segments

A Target Segment consists of a Target Value (in the same units as the Process Value for the Control Loop) for each Trace, a Duration for the Segment and the on/off status of each of the eight events for that segment. The Target Value is the value that the Segment achieves by the end of the Duration.

Target Segments can have Durations from 0 to 9999 minutes. For a Ramp longer than 9999 minutes (166 hours), use multiple segments and calculate the intermediate Target Value. Zero Duration Segments are used to change event outputs and for step changes.

NOTE: RG Events can be assigned as Triggers for recorder Output Relay Action Equations.

Cycle Segments

A Cycle Segment is placed at a point in the recipe where it is desired to repeat a portion of that recipe. These segments contain a No. of Cycles count and a destination Cycle Segment number. Cycles can be defined from 1 to 999 repeats. If more cycles are needed, a second Cycle Segment can be placed in series. A cycle must always be done backwards (to a Segment number less than the Cycle Segment). Cycles can also be nested, up to five deep. If a cycle were defined from Segment 10 back to Segment 2, a nested cycle from Segment 8 back to Segment 4 would repeat its full count each time the outer cycle repeated.

End Segment

Each Recipe ends with either an End or a Repeat Segment. The End Segment determines that the recipe will stop (displaying the message “done”).

Repeat Segment

If Repeat Segment is chosen, the Recipe will start over at the defined Segment number. The difference between a Cycle Segment and a Repeat Segment is that a Cycle Segment is intended for use in the middle of the recipe and the Repeat Segment is intended for use at the end of the recipe. The only way to stop this action is for the operator to manually select Reset, Hold, or Jump. A Repeat Segment also resets the elapsed time counter.

Operator Functions

The following functions (except Cycle) are initiated by an operator. They are mentioned here to clarify configuration choices.

What happens during RUN?

In the RUN mode, the RG starts as defined in the Main Menu and advances one segment at a time to the Stop or Repeat Segment at the end. Each Target Segment starts where the previous segment ended. Elapsed time is counted as the sum of all segments.

What happens during a Cycle?

When a Cycle Segment is encountered (and the cycle count has not reached zero), both traces will go back immediately to the Target Segment number given in the Segment Type Menu. The Traces will then go to the value(s) of that Target Segment over the Segment's duration. Viewing Cycles as concentric loops, the innermost loop Cycle Segment will be reached first. The innermost Cycle will complete its configured number of loops before going on to the next loop.

What happens during a Jump?

It is possible to Jump forward or backward. A Jump can be to any numbered segment (up to, but not including the end segment). The Traces will go from their values at the time of the Jump to the Target Value of the “Jump to” Segment over the duration of the “Jump to” Segment.

Example:

> The RG is in Segment 9 with a current output value of 1000° F when the operator commands the Traces to Jump to Segment 14 (with a Target of 2000° F). The Traces will now ramp from 1000° F to 2000° F over the Segment 14 Duration.

What happens during a Hold?

The RG can be held by using the Hold Action Equation in the Main RG Menu or by using the front panel keys. When a Hold is placed on the RG, both Traces stop. The current output values are held and the events do not change.

What happens during the 60X speed change?

There is a test mode which speeds up the Traces. Durations configured in minutes will operate in seconds (even though the display still reads in minutes). Step changes (0 Durations) will take a finite time (1 or 2 seconds) that will be shown as minutes. 60X speed can only be used on a Reset Recipe before it is started.

What happens during Reset?

A Reset Recipe goes back to the single common set of initial conditions as defined in the Main RG Menu. All timing stops and is reset to zero. The Ramp Generator is left on “Hold.” This action may be used to reset a repeat cycle.

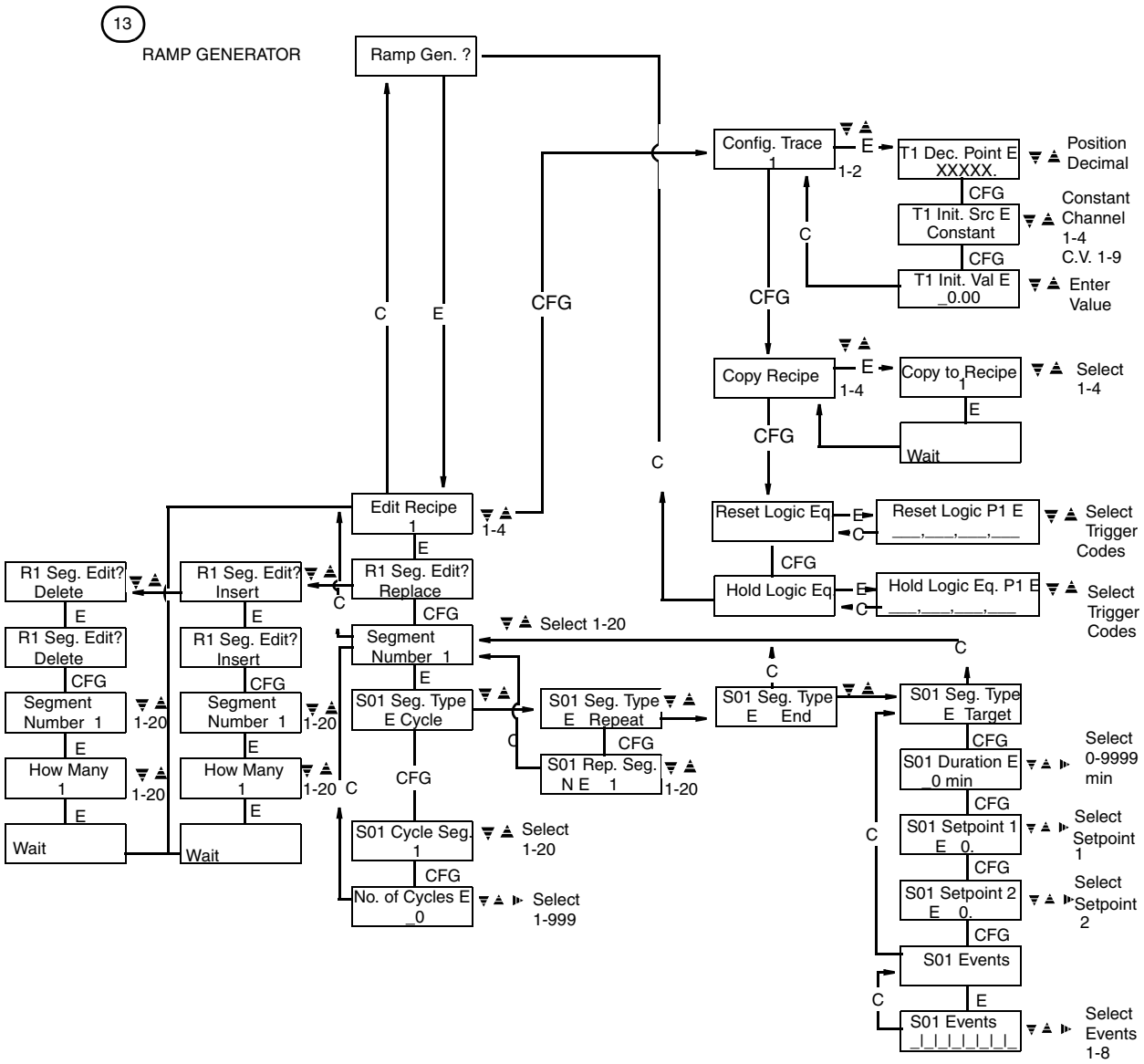

Figure 39. Ramp Generator Menu Sequence

Ramp Generator Procedures

The Main Ramp Generator Menu (Figure 39)

Edit Recipe
1-4

Use the UP/DOWN/SIDE ARROW keys to select one of the four recipes to configure or change.

R1 Config. Trace
1 or 2

Use the UP/DOWN ARROW keys to choose Trace 1 or 2.

TR1 Decimal Pos.
XXXX.X

Use the UP/DOWN ARROW keys to select the Trace Value decimal position

NOTE: If the ramp generator is used as a Control Loop Remote Setpoint, the decimal position should match the PV channel decimal position.

.

TR1 Init. Source

Any Trace that is to be used must have a defined starting place. That place can either be a constant or any channel or any CV calculation. Use the UP/DOWN ARROW keys to select the type of starting value.

TR1 Init. Value
XXXX.X

If the starting place is a constant, use the UP/DOWN/SIDE ARROW keys to enter the starting value.

Copy Recipe?
1-4

It is simple to configure several recipes, which differ from each other only slightly, by copying and editing. Use the UP/DOWN/SIDE ARROW keys to select the recipe from which to copy.

Copy to Recipe
1-4

Use the UP/DOWN/SIDE ARROW keys to specify the number of the recipe into which to copy.

Rset Logic Eq?

This Action (Logic) Equation is used to enter the Internal Triggers or Contact Inputs that can be used to Reset a recipe. Press **ENTER** to examine or change.

```
Rset Logic Eq P1?
___,___,___,___,
```

Use the UP/DOWN/SIDE ARROW keys to enter Triggers. See Action Equations and Internal Triggers on page 179.

```
Hold Logic Eq?
```

This Action (Logic) Equation is used to enter the Internal Triggers of Contact Inputs that can be used to Hold a recipe. Press Enter to examine or change.

```
Hold Logic Eq P1?
___,___,___,___,
```

Use the UP/DOWN/SIDE ARROW keys to enter Triggers. See Action Equations and Internal Triggers on page 179.

The Recipe Menu

```
R1 Seg Edit
Replace
```

The Replace Segment function is used for initial entries and change of segments. Press **CFG** to move on to the Segment Type Menu to configure individual segments. Use the Up Arrow key to modify a recipe by deleting and/or inserting segments.

```
R1 Seg Edit
Delete
```

It is possible to delete a specific segment (or group of adjacent segments) from a recipe. Because deleted segments are lost, it is necessary to press **ENTER** and then **CFG** to begin the Delete process.

```
Segment Number
1 - 20
```

This entry determines the first segment to be deleted. Use the UP/DOWN/SIDE ARROW keys to enter a segment number. Press **ENTER** to proceed.

```
How Many
1 - 20
```

Use the UP/DOWN/SIDE ARROW keys to select the number of segments to delete. Selecting “20” from any segment will delete that segment and all other segments to the end of the recipe. Deleted segments are converted to End Segments. Press **ENTER** to finalize the Delete. “Wait” will appear and remain for up to 120 seconds as each segment within the recipe is reconfigured to a new type and/or segment number.

```
R1 Seg Edit
Insert
```

It is possible to insert a segment (or group of adjacent segments) into a recipe. Because inserted segments cause other segments to be lost (by pushing them out the high end of the recipe), it is necessary to press **ENTER** and then **CFG** to begin the Insert process.

```
Segment Number
    1 - 20
```

This entry determines the segment in front of which new segments are inserted. Use the UP/DOWN/SIDE ARROW keys to enter a segment number. Press **ENTER** to proceed.

```
How Many
    1 - 20
```

Use the UP/DOWN/SIDE ARROW keys to select the number of segments to insert. Selecting "20" from any segment will insert new segments to the end of the recipe. Inserted segments are entered as End Segments. Press **ENTER** to finalize the insert. "Wait" will appear and remain for up to 120 seconds as each segment within the recipe is reconfigured to a new type and/or segment number.

```
S01 Seg Type
    End
```

After an Insert, the recorder goes automatically to the Target Segment Menu. The new segments can then be changed to "Target," "Cycle," or "Repeat" segments.

The Segment Type Menu

```
R1 Seg Edit
   Replace
```

From the Recipe Menu, press **CFG** to enter the Segment Type Menu.

```
Segment Number
    1 - 20
```

Use the UP/DOWN/SIDE ARROW keys to select the Segment to edit.

```
S01 Seg Type
see detail
```

There are four types of Segments: Target, Cycle, Repeat, and End (see the discussion at the beginning of this section). Use the UP/DOWN ARROW keys to select a Segment type. Target Segments will be discussed in the next section.

Cycle Segment

```
S01 Seg Type
    Cycle
```

A Cycle Segment permits repeating of a section of the recipe. A Cycle can repeat up to 999 times. Do not use a Cycle Segment to repeat the whole recipe, as a Repeat Segment can cause a full repeat to occur. Use the **CFG** key to select a Cycle Segment.

```
S01 Cycle Seg
    1 - 20
```

Use the UP/DOWN/SIDE ARROW keys to specify the lower number Segment to which to cycle.

No. Cycles 1 - 999

Use the UP/DOWN/SIDE ARROW keys to specify the number of times to go through a Cycle.

Repeat Segment

S01 Seg Type Repeat

If a recipe is to be run repeatedly, it can be made automatic by ending it with a Repeat Segment. When a recipe repeats, it is sent back to a specified Segment and repeats that sequence until manually changed. The only way to stop this action is for the operator to manually select Reset, Hold, or Jump. Use the **CFG** key to select a Repeat Segment.

Repeat Seg 1 - 19

Use the UP/DOWN ARROW keys to select the lower numbered Segment from which to repeat.

End Segment

S01 Seg Type End

If a recipe is used when needed rather than on a fixed time basis, it should end with an "End." The display will show "done" and the recipe will have to be reset before another use. Use the **ENTER** key after changing a segment to End.

Target Segment

Most recipe Segments are Target Segments (see previous description). Remember that the entered time duration is for both Traces. If a ramp on one Trace must be across two or more durations in order to satisfy the changes on the other Trace, calculate the intermediate value at the end of each duration and use those numbers for the Targets.

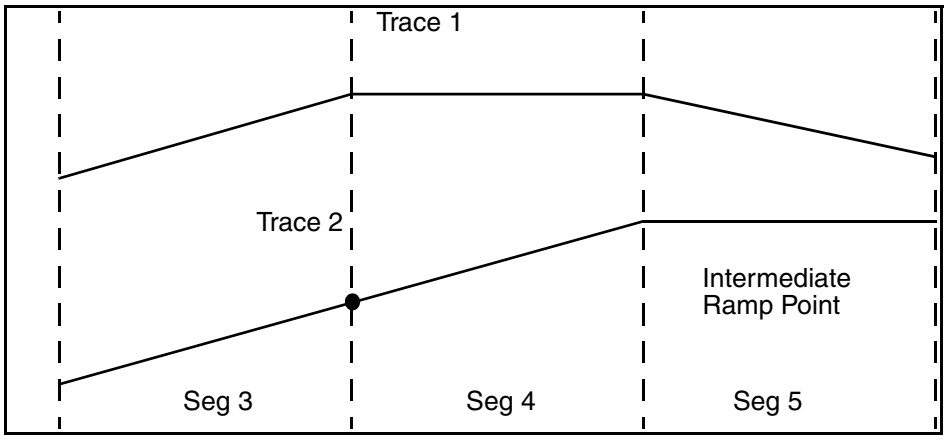

Figure 40. Ramp across Two Segments

```
S01 Seg Type
  Target
```

Start the Target Segment configuration by selecting Segment Type “Target” from the Segment Type Menu.

```
S01 Duration
 0 - 9999 min.
```

Each Segment may be up to 9999 minutes in duration (166.7 hours or almost seven days). Use the Up/Down/Side arrow keys to enter a duration for the selected Segment.

```
S01 Setpoint 1
 X.XXXX?????
```

Enter the Target Value for Trace 1 of this Segment using the Up/Down/Side arrow keys.

```
S01 Setpoint 2
 X.XXXX?????
```

Enter the Target Value for Trace 2 of this Segment using the Up/Down/Side arrow keys.

```
S01 Events
```

There are eight Events for each Segment. Use the Up/Down/Side arrow keys to turn each event ON or OFF during the Segment. Press **ENTER** to set of review the Events.

```
S01 Events P1
___,___,___,___,
```

Use the Up/Down/Side arrow keys to enter each Event that is to be active during a segment by entering its number (1 through 8) here. If all eight Events are entered, the “P2” display that appears is not functional.

If an event is necessary at the end of a segment, then a separate, short time duration, segment must be assigned for the event.

EXACT Tuning

Introduction

EXACT (EXpert Adaptive Controller Tuning) tuning provides an automatic means of retuning the controller P, I, and D parameters following a response to an upset. This retuning is implemented faster and more nearly optimally than could be achieved by an experienced control engineer.

In addition, if initial estimates of the control parameters are not available, EXACT has a pretune function which can calculate initial values of P, I, and D, and also three other parameters, and automatically enter these values into the memory of the controller.

NOTE: EXACT is not intended for nor able to anticipate tuning changes that may be needed in applications such as batch or antisurge processes. Since the EXACT Controller adjusts the P, I, and D terms for conditions at the end of the previous response to an upset, settings may not be acceptable for resumption of control after a restart. For instance, even if OVR (overshoot) is set to zero, some overshoot may occur on the next BATCH startup if conditions for the new cycle are not just like the last.

Principle of Operation

EXACT tuning is based on pattern recognition, the same approach that an experienced control engineer would use. Pattern recognition utilizes the conventional plot of change in measurement vs. time that follows a process upset (see section on Determining Values for EXACT Parameters on page 164).

When the difference between measurement and set point exceeds a preset amount, EXACT monitors the response and then feeds shape information to the self-tune algorithm. The algorithm calculates the best settings of proportional band, integral, and derivative actions for the process, consistent with the data that was previously configured into the controller; and then implements these changes.

If necessary, tuning is updated following each disturbance response. EXACT samples the process error either one or two times a second in its search for response pattern features.

For a more complete discussion on EXACT tuning, see Technical Information TI 039-200.

Terminology

The terminology used for the various EXACT parameters are the terms that appear in the two-line display on the controller. Table 2 defines these terms, and Table 3 lists quantitative data about them.

EXACT Configuration Data

All EXACT parameters are configured (entered into controller memory) in the “EXACT Cfg.” menu located in the passcode protected configuration area. These parameters can also

be entered in the Operator Menu if access is configured to "ON." EXACT configuration consists of three decisions and 18 numerical entries.

The following decisions are required:

1. EXACT Enable:

   Should EXACT be configured into the controller?

   OFF: No EXACT menus appear in the device

   ON: EXACT menus are accessible in the device for configuration and viewing of parameters and implementation of EXACT self-tune and pretune functions. Read-only information is available in the Operator menu. Recall that EXACT1 = EXACT for Controller 1; EXACT2 = EXACT for Controller 2.

   The "EXACT Enable" menu item appears in the Controller Prog. Loop menu (passcode protected configuration area).

   If two controllers are present in the 740C and each controller has EXACT, the "EXACT ENABLE" selection will affect the rate at which EXACT is executed, as shown below. The sampling rate of the controller always remains at twice a second (2/sec).

Exact 1 Enable	Exact 2 Enable	Exact 1 Rate	Exact 2 Rate
On	Off	2/sec	0
Off	On	0	2/sec
On	On	1/sec	1/sec

2. EXACT Access:

   If EXACT is configured, should operator (without using security passcode) be allowed to access and change adjustable EXACT parameters? YES or NO; to be entered in "EXACT Access" in the Config. EXACT menu.

3. EXACT State/EXACT Pretune:

   If EXACT is configured, should EXACT be implemented?

   The EXACT STATE, On/Off and EXACT PRETUNE, ON/Off menu items are accessible in the EXACT Cfg. menu in the passcode protected Config. area and may be accessible in the Operator menu if EXACT access has been set to ON.

   EXACT STATE, On or Off; (for the Self-tune function). Turns Self-tune function on or off.

   EXACT PRETUNE, On or Off (for the Pretune function). Turns Pretune function on or off.

The EXACT algorithm contains 18 parameters, of which eight are user-adjustable. The controller is shipped with these eight parameters at factory-set (standard) values, which can be changed by the configurator. The values of the remaining ten parameters are determined by the process itself, and are continually updated. See Table 2 and Table 3 for details about these parameters. Any of the decisions or the values of the eight adjustable parameters above can be changed at any time (in the applicable locations listed above).

Table 2. EXACT Parameters and Their Meaning

Parameter	Meaning
PF (Note 1) IF (Note 1) DF (Note 1)	Values of Proportional, integral, and derivative actions that controller uses when EXACT tuning is not configured (or not implemented). These are also initial values for ACTIVE P, ACTIVE I, and ACTIVE D, below.
EXACT STATE? EXACT PRETUNE	Should EXACT tuning, which has been configured, be implemented (ON or OFF)? Should pretune function be implemented (ON or OFF)? Pretuning function. Method of obtaining initial values of 6 key EXACT parameters, if details are not known about process.

Table 2. EXACT Parameters and Their Meaning (Continued)

Parameter	Meaning
VIEW EXACT	The 18 parameters (below) that comprise EXACT algorithm.
ACTIVE P, ACTIVE I, ACTIVE D,	Latest updated value of proportional, integral, and derivative actions that controller is using. (Original starting values came from PF, IF, and DF, above.)
NB*	Noise Band. Error band (±) within which the process will be controlled by last values of P, I, and D. When error exceeds 2xNB, corrective action will start (EXACT starts to monitor for peaks).
WMAX*	Maximum waiting time between Peak 1 and Peak 2.
DMP*	Damping. Desired amount of damping of measurement signal.
OVR*	Overshoot. Desired amount of measurement overshooting.
CLM*	Clamp. Factor that PF or IF values are either multiplied or divided by to establish maximum and minimum EXACT values of P and I.
DFCT*	Derivative Factor. Factor by which ACTIVE D is multiplied.
LIM*	Cycle Limit. If *output* is cycling for more than three minutes, controller is detuned by increasing P and decreasing D.
BUMP*	Bump (upset) value for pretuning (PTUN) function, expressed as ±% of output.
PK1, PK2, PK3	Actual magnitudes of most recent series of error peaks. Error in amount of deviation of measurement from set point.
TPK1, TPK2, TPK3	Actual time intervals between most recent series of error peaks (upset to Peak 1, Peak 1 to Peak 2, Peak 2 to Peak 3).
ERR	Error. Amount of deviation of measurement from setpoint.
EXACT ENABLE	Enable EXACT menus in the 740 for configuration, viewing, and implementation. Found in the Cfg. Controller Prog. Loop menu.

Table 2. EXACT Parameters and Their Meaning (Continued)

Parameter	Meaning
EXACT STATUS	Statuses of the various affected parameters during corrective action.
**STATUS ENT	Reason why specific action was taken. Eleven messages are available; see Table 4 "Display Messages in Status Ent."
**STATUS SELF-TUNE	Self-tuning. Specific step just completed during corrective action. Twelve messages are available. See Table 5 "Display Messages in Status Self-tune."
**STATUS PRETUNE	Specific pretuning step just completed. Ten messages are available; see Table 6 "Display Messages in Status Pretune."
HOLD**	Status of EXACT hold state, ON or OFF.
HOLD PID	PID values used during the hold state, faceplate or adapted (Faceplates = PF, IF, DF; Adapted = Active P, Active I, Active D)
HOLD EQ.	EXACT Hold Action Equation. Defines triggers that will, when activated, put EXACT into "INACTIVE" state. EXACT operation will be suspended. PID values used during the inactive state will be determined by the "HOLD PID" selection.

* EXACT configuration parameters are also available for manipulation in the Cfg. EXACT menu, and if access is on, in the Controller Operator Menu.
** View Only.

Self-Tune Function

When EXACT is configured and implemented (State = ON), self-tuning occurs automatically whenever the measurement deviates from the set point by an amount greater than twice the value of the noise band (NB) parameter.

The EXACT Self-tune function will operate on either the primary or alternate set of tuning constants, depending on which set is active.

If the display is moved to STATUS Self-Tune, a sequence of messages appears. Each message shows the status of the specific correction action taking place. See Table 5, "Display Messages in Status Self-Tune," for a list of these messages.

If the display is moved to STATUS ENT during this correction process, messages showing the reason for a specific corrective action taken appear. See Table 4, "Display Messages in Status Ent," for a list of these messages.

NOTE: Values of PF, IF, and DF are accessible for manipulation in the Controller Settings menu (in the Cfg. Controller and in the Operator menu if access is ON) and are accessible for viewing only in the "View EXACT" menu.

Table 3. Values of EXACT Parameters

Parameters are listed in the sequence that they appear in the display.
For additional data, see Determining Values for EXACT Parameters on page 164.

Parameter*	Parameter Limits	Standard Configuration	User Configuration
PF	0.1 and 2000%	100%	_____
IF	0 and 999.90 minutes	1 minute	_____
DF	0 and 99.99 minutes	0 minutes	_____
EXACT			
EXACT STATE	ON or OFF	OFF	ON
EXACT PRETUNE	ON or OFF	OFF	OFF
ACTIVE P	1 and 2000%	**	
ACTIVE I	0.01 and 200 minutes	**	
ACTIVE D	0 and 100 minutes	**	
PK1	-102 and +102%		
PK2	-102 and +102%		
PK3	-102 and +102%		
TPK1	<WMAX		
TPK2	WMAX		
TPK3	>WMAX		
ERR	-102 and +102%		
NB	0.5 and 30%	2%	
WMAX	0.5 and 200 minutes	5 minutes	
DMP	0.1 and 1	0.3	_____
OVR	0 and 1	0.5	_____
CLM	1.25 and 100	10	_____
DFCT	0 and 4	1	_____
LIM	2 and 80%	80%	_____
BUMP	-50 and +50%	8%	_____
EXACT STATUS			
STATUS ENT	(11 messages)	INIT	(No Entry)
STATUS SELF-TUNE	(12 messages)	OFF	(No Entry)
STATUS PRETUNE	(10 messages)	OFF	

* After EXACT is enabled (in Controller Menu in the Configuration area), the parameters listed above are then specified in Cfg. EXACT Menu in Configuration area. These parameters can also be specified in the "Cfg. EXACT" Menu in Operator area, if EXACT Access is configured to On.
** Starting values of ACTIVE P, I, and D are same as PF, IF, and DF (at top of table). EXACT will then continually update these ACTIVE values, when invoked.
*** EXACT PRETUNE (STATE) is normally OFF. To start the pretune function, the user must turn it ON. After function is completed, it automatically resets itself to OFF.

Pretune Function

If the control characteristics of the process are not known, the EXACT pretune function will calculate optimum starting values for the six key parameters listed below. These calculated values are then automatically implemented as initial values for the EXACT self-tune function.

NOTE: It is recommended that the pretune function be used even if control characteristics of the process are known.

The factory-set values of all the adjustable parameters (see Table 2) are used as initial values by the pretune function. If the value of any of these parameters is obviously wrong for the process, the user should change it (in Step 1 below).

Parameters That Can Be Set by Pretune	Value of Factory-Set Configuration
PF (Note 1)	100%
IF (Note 1)	1 minute
DF (Note 1)	0 minutes
NB	2%
WMAX	5 minutes
DFCT	1.0

NOTE: EXACT Pretune will derive faceplate values for the PRIMARY set of tuning constants. The alternate set of tuning constants is not affected by the Pretune function.

The controller must be in MANUAL when the pretune function is used.

Bump Parameter

The pretune function uses the BUMP parameter (±) to introduce a small process upset (by changing the output) to generate the required EXACT data. The BUMP value should not be large enough to drive the output off scale. For example, with the measurement steady and near the set point, if the output is at 6% of scale, a BUMP value of -8% is too large because it would drive the output off scale (to -2%). Therefore, its value should either be decreased or changed to a plus (+) value. If the BUMP value is too small to activate the pretune algorithm, the error message STATUS PRETUNE = Small Change 1 will appear; in this case its value should be increased.

Procedure for Pretune

1. Enable EXACT in the controller. Depending on process requirements, change value of any parameter to a more applicable value.

   EXACT STATE must be OFF.

2. With controller in MANUAL, bring and hold measurement near set point value.

3. Using keypad, move display to EXACT PRETUNE? and set to ON. (Select ON with UP/DOWN ARROW keys and hit ENTER.)

   Pretune operation will now start automatically and display the following messages sequentially.

   STATUS PRETUNE = Small Change 1* (Phase 1)

   STATUS PRETUNE = Waiting SS 2 (Phase 2)

   STATUS PRETUNE = New PID Calc 3 (Phase 3)

   STATUS PRETUNE = Noise Band 4 (Phase 4)

   STATUS PRETUNE = Pretune Finished (Procedure finished)

   * If the value of Bump is too small to activate the algorithm, the message will persist for a period longer than twice the process deadtime. In normal operation, the next message appears prior to that time.

   After the STATUS PRETUNE = Pretune Finished message,

   The calculated values of the six key parameters are now entered into the memory of the controller. The controller is now operating in MAN control.

Pretune Error Messages

The three conditions listed below will not allow the pretuning to be completed. If a PRETUNE error message is displayed, change the value of the applicable parameter. (Note that value of BUMP should be increased only if its error message persists.)

Determining Values for EXACT Parameters

There are eight user-adjustable parameters in the EXACT algorithm (plus the three standard control action parameters, PF, IF, and DF). The factory-set (standard) configuration values are safe, general purpose values. If any values are not suitable for the user's process, more applicable values should be used. Those parameters whose value can be determined by the pretune function are marked with an asterisk (*). Values of the ten non-user-adjustable parameters are set by process and are continually updated.

1. PF*, IF*, and DF*. Values can remain at factory-setting, changed by user, or calculated and implemented by pretune function (preferred).

   If EXACT tuning is turned off (EXACT STATE?, OFF), these values are used as proportional, integral, and derivative values for controller.

   If PF, IF, and DF are not calculated by pretune function, after process has been stabilized with EXACT tuning, values of ACTIVE P, I, and D can serve as a guide for setting better control values for PF, IF, and DF.

2. NB* (Noise Band). Minimum noise band setting is 0.5. A noisy process measurement requires a larger value. * Value can be determined by PRETUNE function.

* Value can be determined by PRETUNE function.

3. WMAX* (Wait Max.). WMAX determines a window limiting the search from the second peak. WMAX should be selected so that the period ranges between WMAX/8 and 2 WMAX. It is automatically determined by pretune for the existing operating condition but may need adjustment if the period changes significantly with operating condition. Graphical representation of WMAX is shown in left illustration below (T = period of oscillation, in right illustration in Figure 41).

   Final value of WMAX should be about 2 to 3 times I. Note that if WMAX is less than T/2, instability may result because response may be interpreted as overdamped (ENT = Error Overdamped). If WMAX is larger than 8T, no corrective action will be taken (ENT = WMAX Error).

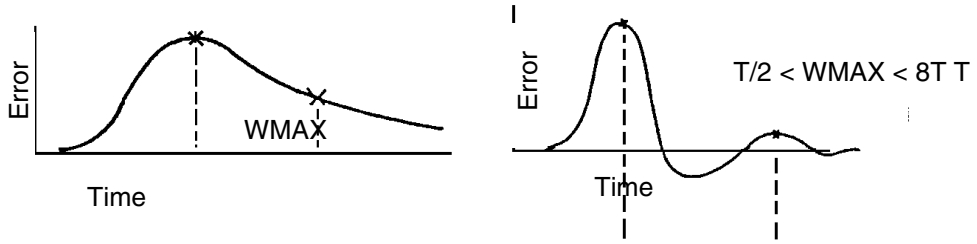

Figure 41. WMAX

4. DMP and OVR (Damping and Overshoot). These parameters are used in combination to create desired response curve. General purpose values are DMP = 0.3 and OVR = 0.5. In illustrations below, upper set shows typical response curves with various combinations of DMP and OVR. Only one of these objectives is satisfied at a time - the one having the larger measured minus target value. Usually, for load disturbances it is damping, and for set point it is overshoot. Lower set shows details for calculating these parameters. See Figure 42

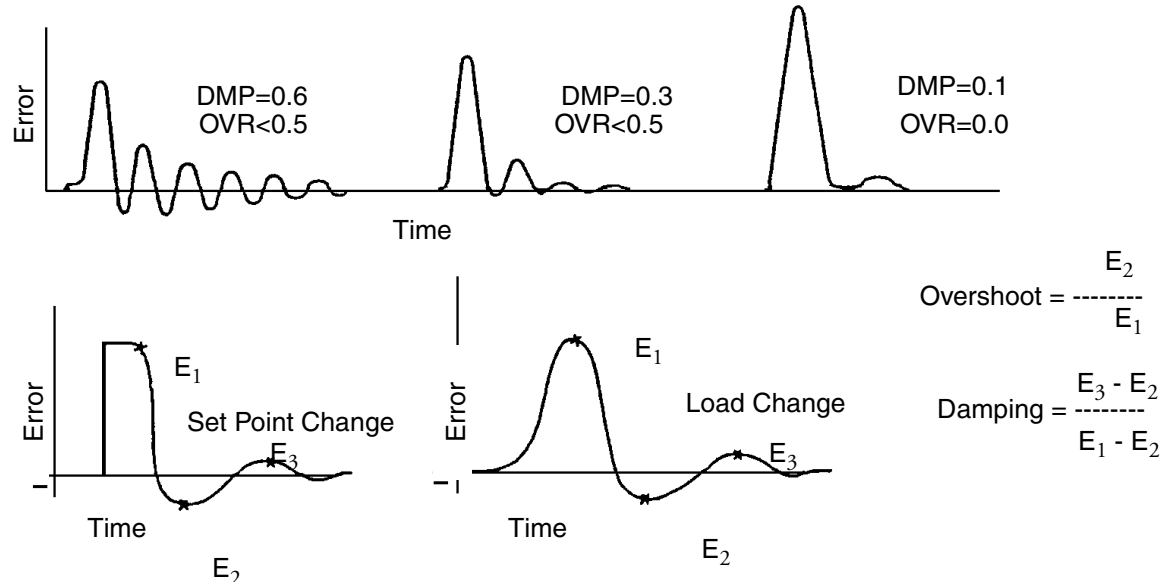

Figure 42. Damping and Overshoot.

* Value can be determined by PRETUNE function.

5. CLM. General purpose value is 10. Values of ACTIVE P and I are limited to values of PF and IF multiplied by 1/CLM and CLM.
6. DFCT* (Derivative Factor). General purpose value is 1. Factor by which ACTIVE D is multiplied to change influence of derivative action.

   If process is dominated by dead time, derivative is not helpful, and DFCT should be set to 0.

   If process requires a long derivative time (such as a double integral process), DFCT can be set up to 4.0.
7. LIM (Cycle Lim.). General purpose value is 80.0%. If output is cycling at a frequency higher than loop can respond to, and average peak exceeds LIM for over 3 minutes, output will be stabilized by detuning (increasing P and reducing D).

   If process has very little dead time and requires a high controller gain (low proportional band), small errors will cause large output changes. In this case a lower value of LIM is required.
8. BUMP. See discussion of this parameter in Pretune Function on page 163.

* Value can be determined by PRETUNE function.

EXACT Messages and Their Meaning

Table 4. Display Messages in Status ENT

Display	Meaning
STATUS ENT	Reason for specific corrective action taken. (This parameter is updated every time P, I, and/or D are adjusted.)
1 Peak Found	Only one significant (with respect to noise band) peak was found. Measurement is approximately critically damped.
2 Peaks Found	2 peaks found.
3 Peaks Found	3 peaks found. If peaks are significant, response period is used to adjust proportional and derivative actions.
Error Overdamped	Error signal (measurement deviation from set point) was overdamped. [Response may *appear* overdamped if WMAX is set too low. If so, algorithm will tighten control settings (decrease P and I, and increase D). This can lead to instability.}
Error Suspect	Error signal has suspicious shape that may be caused by multiple disturbances; or is suspect because of the state of the system or the signal.
WMAX Error	Error signal response occurred faster than expected based on WMAX time. No corrective action was taken. (If response was correct, WMAX should be reduced to allow EXACT algorithm to operate; WMAX should be smaller than 8 times minimum period of oscillation.)
SP Change	A large set point change occurred after algorithm had located or verified a peak. Additional corrective action did not occur because algorithm went immediately into SETTLE (waiting for the next peak) state. (“Large” set point change means value larger than peak being observed.)
Out of Range	Error signal was observed but P, I, and/or D were not changed because process was out of control range. (For example, measurement is low, but output is already at high limit.)
P and I Clamped	Algorithm attempted to change P and I to values larger than setting of PF and IF modified by MAIN CLM. These values are set at MAIN CLM limits. (If required, settings of PF, IF, or MAIN CLM can be changed.)
EXACT Alg. Init	EXACT algorithm has been initialized. (This can occur when power is turned on, or when first switching from MAN to AUTO.)
Invalid EXACT Cfg.	Invalid configuration for running EXACT. Slew rate must be OFF (0%/min) or MAX (9999%/min) for EXACT to run.

Table 5. Display Messages in Status SELF-TUNE

Display	Meaning
STATUS SELF-TUNE	Status of specific corrective action taking place.
Quiet	No corrective action is taking place (error is <2xNB).
Locate Peak 1, 2, or 3	A peak (1, 2, or 3) has been located.
Verify Peak 1, 2, or 3	The located peak (1, 2, or 3) has been verified.
Adapt PID	P, I, and/or D have been adjusted.
Settling	Waiting for next peak.
In Manual	Self-tuning is operational, but controller is in MAN.
Inactive	EXACT self-tuning is temporarily disabled due to activation of the EXACT Hold Action equation. PID values used during the Hold state can be either the faceplate values or the last adapted values (configurable via menu selection "Hold PID").
Off	Self-tune is OFF.

Table 6. Display Messages in Status PRETUNE

Display	Meaning
STATUS PRETUNE	Specific step in operation of pretune function.
Off	Pretune function has not been switched on.
Transfer to Man	Put controller in MANUAL to run PRETUNE.
Small Change 1	Phase1. Pretune must be set to ON after switching to Manual. If message lasts longer than twice process dead time, value of BUMP is too small.
Waiting SS 2	Phase 2. Waiting for steady state.
New PID Calc 3	Phase 3. New values of P, I, and D calculated. Output is returned to initial value.
Noise Band 4	Phase 4. Measured noise band.
Pretune Finished	Pretune function finished. Values of the 6 key EXACT parameters has been calculated and put into memory.
Wrong Output Action	Pretuning not completed because controller output action (INC/INC or INC/DEC) is configured wrong.
Small Noise Band	Pretuning not completed because value of noise band (NB) is too small.
Invalid EXACT Cfg.	Invalid configuration for running EXACT. Slew rate must be OFF (0%/min) or MAX (9999%/min) to run EXACT.

EXACT Tuning Procedures

Select EXACT/Controller 1 or 2

Push	▲▼	Select: Controller 1 or 2	Cfg. EXACT? 1

Select EXACT State (ON or OFF)

Push	**ENTER**	See:	EX1 State? OFF
Push	▲▼	Select: ON or OFF	EX1 State? E Your Selection
Push	**ENTER** ▶	See:	EX1 State Your Selection

This selection turns the EXACT function ON or OFF for controller 1 or Controller 2, as selected.

Turn PRETUNE (ON or OFF)

Push	**CFG**	See:	EX1 Pretune? OFF
Push	▲▼	Select: ON or OFF	EX1 Pretune? E Your Selection
Push	**ENTER** ▶	See:	EX1 Pretune? Your Selection

Enable EXACT Access (ON or OFF) to the Operator Menu

Push	**CFG**	See:	EX1 Access? E OFF
Push	▲▼	Select: ON or OFF	EX1 Access? Your Selection
Push	**ENTER** ▶	See:	EX1 Access? Your Selection

This menu allows all EXACT configuration parameters to be changed by an operator when Access is ON.

Select Noise Band

Push	**CFG**	See:	EX1 Noise Band _2.0%
Push	▲▼ or ▶	Select: 0.5% - 30%	EX1 Noise Band E Your Selection
Push	**ENTER** ▶	See:	EX1 Noise Band Your Selection

Select EXACT Maximum Wait

Push	**CFG**	See:	EX1 Wait Max. _5.00 min
Push	▲▼ or ▶	Select: 0.5 min - 200 min	EX1 Wait Max. E Your Selection
Push	**ENTER** ▶	See:	EX1 Wait Max. Your Selection

Select Damping

Push	**CFG**	See:	EX1 Damping? _0.1
Push	▲▼ or ▶	Type: 0.1 - 1.0	EX1 Damping E Your Selection
Push	**ENTER** ▶	See:	EX1 Damping Your Selection

Select EXACT Overshoot

Push	**CFG**	See:	EX1 Overshoot _0.50
Push	▲▼ or ▶	Type: 0.0 - 1.0	EX1 Overshoot E Your Selection
Push	**ENTER** ▶	See:	EX1 Overshoot Your Selection

Select EXACT CLM

Push	**CFG**	See:	EX1 CLM _10.00
Push	▲▼ or ▶	Type: 1.25 - 100.00	EX1 CLM E Your Selection
Push	**ENTER** ▶	See:	EX1 CLM Your Selection

Select EXACT Derivative Factor

Push	**CFG**	See:	EX1 Deriv. Fact _1.00
Push	▲▼ or ▶	Type: 0.0 - 4.0	EX1 Deriv. Fact E Your Selection
Push	**ENTER**	See:	EX1 Deriv. Fact Your Selection

Select EXACT Cycle Limit

Push	**CFG**	See:	EX1 Cycle Lim. _80.0%
Push	▲▼ or ▶	Type: 2.0% - 80.0%	EX1 Cycle Lim. E Your Selection
Push	**ENTER**	See:	EX1 Cycle Lim. Your Selection

Select EXACT Bump %

Push	**CFG**	See:	EX1 Bump _8.0%
Push	▲▼ or ▶	Type: -50.0% - 50.0%	EX1 Bump E Your Selection
Push	**ENTER**	See:	EX1 Bump Your Selection

Assign ACTION EQUATION TRIGGER CODES for EXACT Hold

(Action Equations and Internal Triggers on page 179 explains ACTION EQUATIONS AND INTERNAL TRIGGERS.)

Push	**CFG**	See:		EX1 Hold Eq?
Push	**ENTER**	See:		EX1 Hold Eq P 1 ----, , , ,
Push	▲▼ or ▶	Select:	As many trigger codes as necessary to complete your ACTION EQUATION. If you use more than 4 codes, push ENTER after the fourth code, then CFG to move to the next page (P2). Push ENTER when complete.	EX1 Hold Eq P 1 E Your Selection
Push	**ENTER**	See:		EX1 Hold Eq Your Selection

The ACTION EQUATION TRIGGERS selected in this menu are used to Hold (suspend) EXACT operation. The PID values may be returned to the faceplate values during the HOLD operation or the most recently adapted values can be retained during a HOLD. Once the HOLD is released, EXACT operation resumes, starting with the values used during the HOLD. The HOLD state is indicated in the “View EXACT” operator menu. In addition, if EXACT is in the HOLD state, the “EXACT Status, Self-tune” display will read “Inactive.” The PID values used during the Hold operation are selected via the “EXACT Hold PID” parameter.

Select EXACT Hold PID

Push	**CFG**	See:		EX1 Hold PID? Faceplate
Push	▲▼	Select:	Faceplate or Adapted	EX1 Hold PID E Your Selection
Push	**ENTER**	See:		EX1 Hold PID Your Selection

Calibration Menu Configuration

CFG key - to move through a menu of displays
ENTER key - to select a "?" item
UP/DOWN ARROW keys - to change selections
SIDE ARROW key - to move cursor
LIGHTED "E" in upper right requires ENTER or CLEAR to leave that display

---

***CAUTION**: DO NOT USE the Calibration Menu to set up a recorder to measure a specific input. Use Sections Overview on page 61 through Communications Description on page 116 for configuration.*

The Instrument Calibration Function permits:

- Calibration of Input Channels using Precision Signal Standards.
- Calibration of the Thermocouple Cold Junction Compensation using a Thermocouple at a Known Temperature or a Precision Thermocouple Simulator.
- Alignment of Pens to the High and Low Ends of the Printed Chart.
- Returning Channels and Retransmissions to Original Factory Calibration (without affecting user entered configuration).
- Observe (via a hexadecimal code) certain options. See Matrix Table.

```
Change Cal?
No
```

This is the default selection. Use the UP/DOWN ARROW keys to change the selection to one of the following:.

```
Change Cal?
Input Channel
```

- Press ENTER to begin Calibration of an Input Channel.

```
Channel
  1-4
```

- Use the UP/DOWN ARROW keys to select the Channel to Calibrate, then press ENTER. Each Channel is calibrated separately.

```
Choose Range
20 mV
```

- Because the recorder internal operation Span (gain) is chosen automatically when the Range Low and High values are entered (see Channel (1 to 4) Configuration Procedure on page 74 and Channel (5 and 6) Configuration Procedure on page 79), it is recommended that ALL ranges be calibrated. Use the UP/DOWN ARROW keys to select the Range to calibrate.

  20 mV

  60 mV - (calibrate this range <u>before</u> calibrating the CJC)

  80 mV

200 mV

400 mV

1.7 V - (calibrate this range before calibrating the CJC)

2.5 V

5.0 V

Ohms (RTD current set, 300 _

***CAUTION**: Precision Input Sources must be connected and set to the proper value when proceeding past this step.*

---

mV Ranges	Resistance Ranges
C1 Apply High 20.00 mV	C1 Apply Resist. _300.00 ohm

Adjust the Input Source to the value given (20 mV in example). If the actual connected value varies from the prompted value, use the UP/DOWN/SIDE ARROW keys to enter the actual connected value. Press ENTER after selection. Press CFG to calibrate.

```
C1 Apply Low
0.00 mV
```

Adjust the Input Source to the value given. If the actual connected value varies from the prompted value, use the UP/DOWN/SIDE ARROW keys to enter the actual connected value. Press ENTER after selection. Press CFG to calibrate.

```
Change Cal?
CJC Sensor
```

Press ENTER to begin calibration of the Cold Junction Sensor for Thermocouple circuits. Use UP/DOWN arrow keys to select input card 1 or 2. Calibration requires connection of a Type J thermocouple at a known temperature or a Type J thermocouple simulator input.

```
Enter Ref. Temp.
XX.X  °C
```

Use the UP/DOWN/SIDE ARROW keys to enter the Type J thermocouple (or TC simulator) Input Temperature. A simpler but somewhat less accurate method is to short the Input to Channel 2, measure the temperature at the terminal board between the Channel 1 and 2 Input Terminals (as close to the CJC sensor as possible), press ENTER, then CFG to store that value for the Reference Temperature (above).

If more than two channels are present, repeat CJC Cal. using Channel 3 on Board #2. See Figure 5.

```
Change Cal Temp.
Factory Cal?
```

Press ENTER to being to reinstall the original factory calibration for all channels.

NOTE: This choice returns the constants stored during manufacture. It ***does not*** *change user-entered configuration.*

```
Factory Cal
X
```

Use the UP/DOWN ARROW keys to select Channel to default to Factory Calibration.

```
Factory Cal
ENTER to Confirm
```

Press ENTER to return Input Channel to initial Factory Calibration.

```
Change Cal?
Cal Pen?
```

Press ENTER to being Calibration of pens.

```
Cal Pen?
1-4
```

Use the UP/DOWN ARROW keys to select Pen Number. Then ENTER.

```
Set Pen Zero
'C' avoids change
```

Use the UP/DOWN ARROW keys to move the selected pen to “0”. Then press CFG to move to the next display. If the CFG key (in this menu, a displayed 'C' means CFG) is pressed without using the UP/DOWN ARROW keys, you move directly to the next display.

```
Set Pen Span
'C' avoids change
```

Use the UP/DOWN ARROW keys to move the selected pen to 100% of desired span. Press CFG to return to measurement.

```
Change Cal?
View Options
```

This display shows installed Software Features as 16 hexadecimal numbers. Each number represents a four place binary number. The hex numbers in each position show the optional features present in a particular instrument. 0 = Optional Features not present. See Table 7.

```
Change Cal?
Cal Retrans?
```

Press ENTER to begin calibration of the Retransmission Outputs.

```
Cal Retrans?
1 to 4
```

Use UP/DOWN ARROW keys to select Retransmission Output to calibrate.

```
Cal Retrans?
ENTER to confirm
```

Before pressing ENTER, connect the Retrans output to Channel 1 (+ to + and – to –). Use a 250 Ω shunt or connect for retrans. voltage output.

```
Change Cal?
Retrans Fact Cal
```

Press ENTER to begin return of Factory Calibration to a Retrans. Output. Note: This does not change any of the user configuration.

```
Recall Retrn No.
X
```

Use the UP/DOWN ARROW keys to select the Retrans. to default to Factory Calibrations settings.

```
Cal Retrans?
ENTER to confirm
```

Press ENTER to recall the Factory Calibration for a Retrans. Output.

Table 7. Hexadecimal Options Codes

Digit	Hexadecimal Options Codes
1	Not Used
2	0 = No Retransmission
	8 = 1 Retransmission Output
	C = 2 Retransmission Outputs
	E = 3 Retransmission Outputs
	F = 4 Retransmission Outputs
3	0 = No Custom Curve
	8 = Custom Curve
4	0 = No Calculated Channels
	8 = 1 Calculated Channel
	C = 2 Calculated Channels
5	0 = No Totalizers
	8 = 1 Totalizer
	C = 2 Totalizers
	E = 3 Totalizers
	F = 4 Totalizers
6	Not Used

Table 7. Hexadecimal Options Codes (Continued)

Digit	Hexadecimal Options Codes (Continued)
7	0 = No Totalizer Outputs
	8 = 1 Totalizer Output
	C = 2 Totalizer Outputs
	E = 3 Totalizer Outputs
	F = 4 Totalizer Outputs
8, 9, 10, 11	Not Used
	0 = No Controllers, No Ramp Generator
	2 = Ramp Generator Only
	8 = Control Loop 1 Only
	A = Control Loop 1 and Ramp Generator
	C = Control Loop 1 and Control Loop 2
	E = Control Loop 1, Control Loop 2, and Ramp Generator
12	8 = 740 Series
13	0 = No EXACT Algorithms
	8 = EXACT Algorithm for Loop 1
	C = EXACT Algorithms for Loop 1 and Loop 2
14, 15, 16	Not Used

Action Equations and Internal Triggers

An ACTION EQUATION is a group of triggers assigned to a specific function that, when activated, causes a specific action. A TRIGGER is the means of initiating an action.

Specific automatic actions,such as start, stop, and reset, may be added to several features within this instrument through ACTION EQUATIONS.

These same actions may be triggered manually by assigning them to the "Key" Trigger Code (Operator Soft Key). This allows an operator to quickly trigger any event enabled to him or her.

As you scanned through the various configuration menus, you noticed displays that read:

```
XXXXXXX  Eq P 1
---,   ,   ,   ,
```

This is page one (P 1) for that particular Action Equation. This is where the triggers are assigned. An Action Equation is actually a "Logic OR" statement which defines the trigger or triggers that modify the particular feature. One trigger is all that is necessary to implement an action equation; however, up to 64 (4 per page times 16 pages) may be used. In other words, if <u>any</u> action occurs that is represented by a trigger, then the ACTION EQUATION is enabled.

Each action equation page asks (via a 3-space cursor) for up to four 3-digit trigger codes separated by commas. Although only one code is needed, as many as 64 may be used. See the examples for sample ACTION EQUATIONS.

Each ACTION EQUATION within the various menus lists all the available trigger codes. By scrolling through the list, using the ▲▼ keys, the necessary triggers may be selected by stopping at a particular code and pressing the **ENTER** key. Table 8 lists all Trigger Codes and a description of the Action Equation.

Table 8. Trigger Codes and Action Equations

Trigger Codes	Action Equations Description
C11-C18	Contact Input, this is an event input from an external contact closure if you have that option. Contact Inputs 108, represented as C11-C18.
C21-C28	Contact Input, this is an event input from an external contact closure if you have that option. Contact Inputs 9-16, represented as C21-C28.
D1 H	Controller 1 High Deviation Alarm
D1 L	Controller 1 Low Deviation Alarm
D2 H	Controller 2 High Deviation Alarm

Table 8. Trigger Codes and Action Equations (Continued)

Trigger Codes	Action Equations Description
D2 L	Controller 2 Low Deviation Alarm
TT 1-4	A totalizer reaching a preset value may act as a trigger.
A11-A64	Active Alarm, see examples blow: A11 = Alarm, Channel 1, Alarm 1 A64 = Alarm, Channel 6, Alarm 4
RG1-RG8	Ramp Generator Events.
GLA	Global Alarm = (BELL Symbol) Triggers when any alarm is active.
COM	A Communications input through the RS 485 option, if installed.
KEY	This trigger ties the ACTION EQUATION directly to the OPERATOR SOFT KEY.
INA	Instrument alarm (I Symbol) trigger when any instrument alarm is active.
TM 1-4	A Timer reaching a preset time may act as a trigger.

The Features that can be activated by one or more of these Triggers are:

- Activate the Alternate Chart

```
SPD Act Eq   P 1
---,    ,    ,    ,
```

- Reset Totalizer

```
TTx Rset Eq   P  1
---,    ,    ,    ,
```

- Activate the Chart Hold Feature

```
Cht Hold Eq   P 1
---,    ,    ,    ,
```

- Hold Totalizer = Start or Stop

```
TTx Hold Eq   P  1
---,    ,    ,    ,
```

- Activate Relay Outputs

```
RYx Act Eq?   P 1
---,    ,    ,    ,
```

- Activate Manual Output

```
CRx Man Act   P  1
---,    ,    ,    ,
```

- Activate Local Setpoint

```
CRx LSP Act   P 1
---,    ,    ,    ,
```

- EXACT Hold, Suspends EXACT Operation

```
CRx EXx  Eq   P 1
---,    ,    ,    ,
```

- Start/Reset Timers (including self-reset of Periodic Timers, making them repeating timers).

```
TMx Act Eq   P 1
---,    ,    ,    ,
```

- Reset Calculated Variables (High/Low Peak, Avg. or F value)

```
CVx Rset Eq   P 1
---,    ,    ,    ,
```

The specific effects that the Triggers can have are covered with each individual feature. However, the means of selecting the Internal Triggers is the same for all features.

Each page of an Action Equation (P1 - P16) is used to enter up to four triggers. Action Equations can be several pages long. For instance, three pages could be used for ten alarms to trigger one Relay.

Examples

An Action Equation for Output Relay 1 (RY1) responding to Alarm 1 on Channel 1 (All) would be:

```
RY 1   Act Eq  P 1
A11,---,---,---,
```

An Action Equation for output Relay 4 (RY4) responding to Alarm 3 on Channel 2, or Alarm 1 on Channel 3, or an Event on Contact Input 3, or Global Alarm, or Totalizer 1, or Timer 1 would be entered like this:

```
RY 4   Act Eq  P 1
A23,A31,C13,GLA,
```

```
RY 4   Act Eq  P 2
TT1,TM1,   ,   ,
```

Maintenance

Maintenance of the 740 Series is limited to replacing pens and charts. If a part is damaged during normal use, replacements may be identified and ordered from Parts List (PL) 009-166.

Under most circumstances, if the INSTRUMENT ALARM occurs, the instrument should be returned for service (see Instrument Alarms on page 118 for details). The INSTRUMENT ALARM is symbol "I." This symbol appears in the digital display, if the self-diagnostics within the 740 detects a malfunction.

Index

A

Action Equations and Internal Triggers 179
Alarm Configuration Description 92
Alarm Configuration Procedure 94
Alarm Indication 92
Alarm Quantity 92
Alarm Symbols 93
Alarm Types 93

B

Basic Calculations - Calculated Variables 109
Bump Parameter 163

C

Calculated Variable Configuration Menu 109
Calculated Variable Examples 113
Calibration Menu Configuration 173
Channel (1 To 4) Configuration Procedure 74
Channel (5 and 6) Configuration Procedure 79
Channel Notes 82
Chart 83
Chart Installation and Replacement 11
Communications Description 116
Communications Procedure 116
Configuration 147
Configuration Display 25
Controller Configuration Description (740C Only) 121
Controller Configuration Procedure (740C Only) 123
Controller Display 26
Controller Functions Without Exact 47
Controller Keypad 24

D

Default Control Loop Setups 128
Determining Values for EXACT Parameters 164
Digital Displays 24
Door and Platen Operation 9

E

Enable EXACT Access (ON or OFF) to the Operator Menu 169
EXACT Configuration Data 157
EXACT Messages and Their Meaning 167
Exact Tuning 157
Exact Tuning Procedures 169

G

General 1, 54, 147
General Description of Calculated Variables 109
General Wiring Practices 11

I

Individual CV Calculation Descriptions 111
Input 82
Installation 9
Instrument Alarms 118
Instrument Configuration (Common to All Channels) Procedure 85
Instrument Functions 2
Introduction 1, 157

J

Jumpers 12
Jumpers and Wiring 12

K

Keypads and Display 23

M

Maintenance 183
Menu and Select Keypad 23
Menu Structure Diagram 27
Model Code, Controller 4
Model Code, Recorder 3
Mounting 9

O

Operator Mode 41

P

Pen Installation and Replacement 10
Preface xi

Pretune Error Messages 164
Pretune Function 163
Principle of Operation 157
Procedure for Pretune 163

R

Ramp Generator Description 147
Ramp Generator Display 25
Ramp Generator Functions 54
Ramp Generator Procedures 152
Ramp Generator Terminology 149
Range 82
Range, Input, and Chart Span Notes Relating to Channel Configuration 82
Read Me First xi
Recording Functions 41
Relay Output Configuration Procedure 97
Relay Output Description 96
Retransmission Configuration Description 116
Retransmission Configuration Procedure 116
Run Display 25
Run Mode 39

S

Select 169
Select EXACT State (ON or OFF) 169
Self-Tune Function 161
Specialized Functions - Calculated Variables 110
Standard Specifications 6

T

Terminology 157
The Main Ramp Generator Menu 152
The Recipe Menu 153
The Segment Type Menu 154
Timer Configuration Description 107
Timer Configuration Procedure 107
Totalizer Configuration Description 99
Totalizer Configuration Procedure 100
Turn PRETUNE (ON or OFF) 169

U

Unpacking the 740 9

W

Wiring 21
Wiring - Current Input (Using Self-powered Transmitters When the Optional Instrument Supply Is Included But Not Being Used) 20
Wiring - Current Inputs (Using 740 Powered Transmitter) 19
Wiring - Current Inputs (Using Self-Powered Transmitter) 21
Wiring - Direct Voltage Inputs (Above 5 V dc) 18
Wiring - Direct Voltage Inputs (Up to 5 V dc) 17
Wiring - Relay Outputs 21
Wiring - Resistance Temperature Detector (RTD) Inputs 17
Wiring - Retransmission Output and Contact Input 21
Wiring - Signal Inputs - General 14
Wiring - Supply Connection and Voltage Selection 12
Wiring - Thermocouple Inputs 17