REZNOR®

Form I-UDA (Version B)
Obsoletes Form I-UDA (Version A)

Installation / Operation

Applies to: **Model UDAP**
and Model UDAS
V3® Series Fan-Type Unit Heaters

V3 TCORE2

V3 SCV

CERTIFIED

DESIGN CERTIFIED

AGENCY PROCESS CONVERGENCE CUSTOMER QUALITY SYSTEM CQS START-UP PRODUCT WARRANTY

⚠ WARNING:

FIRE OR EXPLOSION HAZARD

Failure to follow safety warnings exactly could result in serious injury, death, or property damage.

Be sure to read and understand the installation, operation, and service instructions in this manual.

Improper installation, adjustment, alteration, service, or maintenance can cause serious injury, death, or property damage.

— **Do not store or use gasoline or other flammable vapors and liquids in the vicinity of this or any other appliance.**

— **WHAT TO DO IF YOU SMELL GAS**
- **Do not try to light any appliance.**
- **Do not touch any electrical switch; do not use any phone in your building.**
- **Leave the building immediately.**
- **Immediately call your gas supplier from a phone remote from the building. Follow the gas supplier's instructions.**
- **If you cannot reach your gas supplier, call the fire department.**

— **Installation and service must be performed by a qualified installer, service agency, or the gas supplier.**

Table of Contents

1. General 2-4
   1.1 Hazard Labels and Notices 2
   1.2 General Installation Information..... 3
   1.3 Warranty 4
   1.4 Installation Codes 4
2. Unit Heater Location..... 4-6
   2.1 Heater Throw 4
   2.2 Location Recommendations..... 5
3. Uncrating and Preparation..... 6-7
   3.1 Uncrating and Inspecting..... 6
   3.2 Preparing for Installation 6
4. Clearances and Dimensions 7-9
   4.1 Clearances..... 7
   4.2 Dimensions 8
5. Hanging the Heater..... 10-11
   5.1 Weights..... 10
   5.2 Lifting and Suspending..... 10
6. Mechanical 11-16
   6.1 Gas Piping and Pressures 11
   6.2 Combustion Air - Models UDAP and UDAP-CV..... 16
7. Electrical Supply and Wiring 16-22
   7.1 General 16
   7.2 Supply Wiring..... 17
   7.3 24V Control Wiring Connections..... 17
   7.4 Wiring Diagrams 18
   7.5 Electrical Operating Components..... 21
8. Controls and Operation..... 22-26
   8.1 Thermostat 22
   8.2 DDC Controls, Options D10 and D14..... 23
   8.3 Ignition System 24
9. Commissioning and Startup..... 27-28
   9.1 Check the installation prior to startup:..... 27
   9.2 Heater Startup:..... 27
   9.3 Check installation after startup:..... 28
10. Maintenance and Service..... 29-36
   10.1 Maintenance Schedule..... 30
   10.2 Maintenance Procedures 31
   10.3 Troubleshooting 36
APPENDIX 38
Index 39
INSTALLATION RECORD 40

1.0 General

1.1 Hazard Labels and Notices

There are warning labels on the unit and throughout this manual. For your safety, read the definitions below and comply with all boxes labeled CAUTION, WARNING, and DANGER during installation, operation, maintenance, and service of this heater.

Definitions of Hazard Intensity Levels in this Manual

HAZARD INTENSITY LEVELS

1. **DANGER: Failure to comply will result in severe personal injury or death and/or property damage.**
2. **WARNING: Failure to comply could result in severe personal injury or death and/or property damage.**
3. **CAUTION: Failure to comply could result in minor personal injury and/or property damage.**

WARNING: Gas-fired appliances are not designed for use in hazardous atmospheres containing flammable vapors or combustible dust, in atmospheres containing chlorinated or halogenated hydrocarbons, or in applications with airborne silicone substances. See Hazard Levels, above.

WARNING: Should overheating occur, or the gas supply control system fail to shut off the flow of gas, shut off the manual gas valve to the utility heater before shutting off the electrical supply.

WARNING: Do not use this appliance if any part has been under water. Immediately call a qualified service technician to inspect the appliance and replace any gas control that has been under water.

1.2 General Installation Information

BOTH this manual and the correct venting manual are REQUIRED for installation of this heater.

1.2.1 Certification

UDAP and UDAS Models 30, 45, 60, 75, 100, and 125 are design certified by the Canadian Standards Association for use in residential, industrial, and commercial installations. Utility heaters certified for “residential use” are intended for heating of non-living spaces that are attached to, or part of a structure that contains space for family living quarters. They are not intended to be the primary source of heat in residential applications or to be used in sleeping quarters.

Models UDAP 150, 175, 200, 225, 250, 300, 350, and 400 and UDAS 150, 175, 200, 225, 250, 300, 350, and 400 are design certified by the Canadian Standards Association for use in industrial and commercial installations only.

All models and sizes are available for use with either natural or propane gas. The type of gas, the gas input rate, and the electrical supply requirement are shown on the heater rating plate. Check the rating plate to verify that the heater is appropriate for the installation site.

1.2.2 Venting Manual

Installation requires both this manual **AND** the venting manual.

Venting Manual by Model

Model	Venting Instruction Manual by Form No.	Look for Matching Label on Venting Manual and Heater
UDAP	**Form I-UD-V-PV**, Standard Power Vent Installation (Each heater has its own dedicated vent.)	Label with a **RED SQUARE**
UDAP-CV	**Form I-UD-V-CV**, Optional Common Vent Installation (Model UDAP heater must be equipped with Option AV6.)	Label with a **BLUE TRIANGLE**
Note: Model UDAP-CV is available in Sizes 30, 45, 60, 75, 100 only		
UDAS	**Form I-UD-V-SC**, Separated Combustion (Model UDAS requires field installation of either Option CC2, CC6, or CC14 Vent/Combustion Air Kit)	Label with a **GREEN CIRCLE**

Both this installation manual and the appropriate venting manual are shipped with the heater. Verify that the literature is correct for the heater being installed. If either manual is missing or incorrect, contact your distributor before beginning installation.

The instructions in this manual apply **only** to the models listed.

Installation should be done by a qualified agency in accordance with these instructions. The qualified service agency installing this heater is responsible for the installation.

1.0 General (cont'd)

1.3 Warranty

Refer to the limited warranty information on the Warranty Card in the "Literature Bag".

Warranty is void if ...

a. Wiring is not in accordance with the diagram furnished with the heater.
b. The unit is installed without proper clearance to combustible materials.
c. A fan model is connected to a duct system or if the air delivery system is modified.

1.4 Installation Codes

These units must be installed in accordance with local building codes. In the absence of local codes, in the United States, the unit must be installed in accordance with the National Fuel Gas Code, ANSI Z223.1. A Canadian installation must be in accordance with the CSA B149 Installation Codes. These codes are available from CSA Information Services, 1-800-463-6727. Local authorities having jurisdiction should be consulted before installation is made to verify local codes and installation procedure requirements.

Special Installations (Aircraft Hangars/ Repair Garages/ Parking Garages)

Installations in aircraft hangars should be in accordance with ANSI/NFPA No. 409 (latest edition), Standard for Aircraft Hangars; in public garages in accordance with ANSI/NFPA No. 88A (latest edition), Standard for Parking Structures; and for repair garages in accordance with ANSI/NFPA No. 88B (latest edition), Standard for Repair Garages. In Canada, installations in aircraft hangars should be in accordance with the requirements of the enforcing authorities, and in public garages in accordance with CSA B149 codes.

California Warning Label

If the heater is being installed in the state of California, the installer **MUST** attach a warning label on the outside of the access door. The California Warning label is shipped in the literature bag along with this manual, the warranty form, and any other paperwork that applies.

If installation is in California, select a location on the heater access panel. Be sure the surface is clean and dry and adhere the label.

Massachusetts Requirement

If the heater is being installed in the Commonwealth of Massachusetts, these units must be installed by a licensed plumber or licensed gas fitter.

2.0 Unit Heater Location

Use the sound data in Technical Data table in the APPENDIX (page 38), clearances in Paragraph 4.1; the combustion air requirements in Paragraph 6.2; the throw tables, mounting height requirements, and location recommendations in Paragraphs 2.1 and 2.2; the weights in Paragraph 5.1; and the venting requirements in the Venting Manual to determine where to suspend the heater.

2.1 Heater Throw

FIGURE 1 - Throw for Fan Models UDAP and UDAS

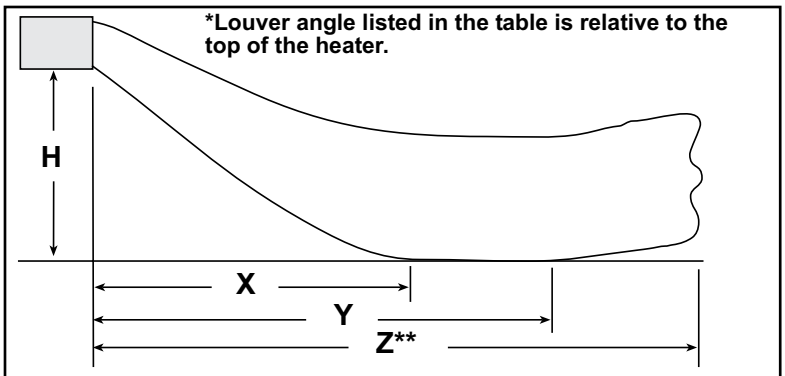

H = Distance from bottom of heater to the floor
X = Distance from heater to start of floor coverage
Y = Distance to end of floor coverage
****Z = point when the air velocity drops below 50 ft (15.2M) per minute**

NOTE: Throws listed are with standard adjustable horizontal louvers at the angles listed (angle is relative to the top of the heater). Throw pattern changes with the addition of optional vertical louvers and/or downturn nozzles.

Dimensions X, Y, and Z (feet) Model UDAP and Model UDAS with Standard Horizontal Louvers at Mounting Heights of 5 - 18 ft

H	30				45				60				75				100				125			
	X	Y	Z	Louver Angle*	X	Y	Z	Louver Angle*	X	Y	Z	Louver Angle*	X	Y	Z	Louver Angle*	X	Y	Z	Louver Angle*	X	Y	Z	Louver Angle*
5 ft	6	14	30	-21°	7	16	40	-20°	8	18	45	-16°	9	20	57	-14°	9	20	59	-18°	10	22	65	-14°
8 ft	7	13	26	-39°	9	16	37	-34°	10	18	42	-29°	12	22	54	-25°	11	21	56	-28°	12	23	63	-24°
10 ft	6	11	22	-52°	9	15	33	-43°	10	17	39	-37°	12	22	52	-32°	12	20	52	-36°	13	24	60	-30°
12 ft	-	-	-	-	8	12	27	-55°	10	16	34	-46°	12	21	48	-39°	11	19	47	-44°	14	23	57	-36°
14 ft	-	-	-	-	-	-	-	-	9	14	29	-56°	12	19	44	-46°	11	17	42	-51°	14	22	53	-43°
16 ft	-	-	-	-	-	-	-	-	-	-	-	-	11	17	38	-54°	10	14	34	-58°	13	20	47	-50°
18 ft	-	-	-	-	-	-	-	-	-	-	-	-	-	-	-	-	-	-	-	-	11	17	40	-57°

H	150				175				200				225				250				300				350				400			
	X	Y	Z	Louver Angle*	X	Y	Z	Louver Angle*	X	Y	Z	Louver Angle*	X	Y	Z	Louver Angle*	X	Y	Z	Louver Angle*	X	Y	Z	Louver Angle*	X	Y	Z	Louver Angle*	X	Y	Z	Louver Angle*
8 ft	13	24	73	-26°	15	28	90	-22°	16	30	93	-20°	14	27	86	-24°	16	29	93	-21°	15	28	94	-24°	17	31	105	-20°	18	34	113	-17°
10 ft	14	24	69	-32°	17	29	87	-27°	17	31	91	-25°	15	27	82	-30°	17	30	90	-26°	16	28	89	-29°	18	32	103	-25°	20	35	110	-21°
12 ft	14	24	64	-39°	18	29	84	-32°	18	31	88	-30°	16	27	78	-35°	18	30	87	-31°	17	28	85	-34°	19	32	98	-30°	21	36	108	-25°
14 ft	14	22	59	-45°	18	28	79	-37°	19	30	84	-34°	16	26	73	-41°	18	30	83	-36°	17	27	80	-40°	20	32	95	-34°	23	35	105	-29°
16 ft	13	20	53	-51°	18	27	74	-42°	19	29	79	-39°	16	24	67	-47°	19	28	78	-41°	17	25	74	-45°	21	31	90	-38°	23	35	101	-33°
18 ft	11	17	44	-58°	17	26	68	-48°	19	28	74	-44°	14	22	60	-53°	18	27	72	-46°	16	24	66	-51°	20	30	85	-43°	23	35	97	-37°

Dimensions X, Y, and Z (meters) Model UDAP and Model UDAS with Standard Horizontal Louvers at Mounting Heights of 1.5 - 5.5M

H	30				45				60				75				100				125			
	X	Y	Z	Louver Angle*	X	Y	Z	Louver Angle*	X	Y	Z	Louver Angle*	X	Y	Z	Louver Angle*	X	Y	Z	Louver Angle*	X	Y	Z	Louver Angle*
1.5 M	1.8	4.3	9.1	-21°	2.1	4.9	12.2	-20°	2.4	5.5	13.8	-16°	2.7	6.1	17.4	-14°	2.7	6.1	18.0	-18°	3.0	6.7	19.9	-14°
2.4 M	2.1	4.0	7.9	-39°	2.7	4.9	11.3	-34°	3.0	5.5	12.8	-29°	3.7	6.7	16.5	-25°	3.4	6.4	17.1	-28°	3.7	7.0	19.2	-24°
3.0 M	1.8	3.4	6.7	-52°	2.7	4.6	10.0	-43°	3.0	5.2	11.9	-37°	3.7	6.7	15.8	-32°	3.7	6.1	15.8	-36°	4.0	7.3	18.3	-30°
3.7 M	-	-	-	-	2.4	3.7	8.2	-55°	3.0	4.9	10.4	-46°	3.7	6.4	14.6	-39°	3.4	5.8	14.3	-44°	4.3	7.0	17.4	-36°
4.3 M	-	-	-	-	-	-	-	-	2.7	4.3	8.8	-56°	3.7	5.8	13.4	-46°	3.4	5.2	12.8	-51°	4.3	6.7	16.1	-43°
4.9 M	-	-	-	-	-	-	-	-	-	-	-	-	3.4	5.2	11.6	-54°	3.0	4.3	10.4	-58°	4.0	6.1	14.3	-50°
5.5 M	-	-	-	-	-	-	-	-	-	-	-	-	-	-	-	-	-	-	-	-	3.4	5.2	12.2	-57°

H	150				175				200				225				250				300				350				400			
	X	Y	Z	Louver Angle*	X	Y	Z	Louver Angle*	X	Y	Z	Louver Angle*	X	Y	Z	Louver Angle*	X	Y	Z	Louver Angle*	X	Y	Z	Louver Angle*	X	Y	Z	Louver Angle*	X	Y	Z	Louver Angle*
2.4 M	4.0	7.3	22.3	-26°	4.6	8.5	27.4	-22°	4.9	9.1	28.0	-20°	4.3	8.2	26.2	-24°	4.9	8.8	28.3	-21°	4.6	8.5	28.7	-24°	5.2	9.4	32.0	-20°	5.5	11.3	34.4	-17°
3.0 M	4.3	7.3	21.0	-32°	5.2	8.8	26.6	-27°	5.2	9.4	27.7	-25°	4.6	8.2	25.0	-30°	5.2	9.1	27.4	-26°	4.9	8.5	27.1	-29°	5.5	9.8	31.4	-25°	6.1	10.7	33.5	-21°
3.7 M	4.3	7.3	19.5	-39°	5.5	8.8	25.6	-32°	5.5	9.4	26.8	-30°	4.9	8.2	23.8	-35°	5.5	9.1	26.5	-31°	5.2	8.5	25.9	-34°	5.8	9.8	29.9	-30°	6.4	11.0	32.9	-25°
4.3 M	4.3	6.7	18.0	-45°	5.5	8.5	24.1	-37°	5.8	9.1	25.6	-34°	4.9	7.9	22.3	-41°	5.5	9.1	25.3	-36°	5.2	8.2	24.4	-40°	6.1	9.8	29.0	-34°	7.0	10.7	32.0	-29°
4.9 M	4.0	6.1	16.2	-51°	5.5	8.2	22.6	-42°	5.8	8.8	24.1	-39°	4.9	7.3	20.4	-47°	5.8	8.5	23.8	-41°	5.2	7.6	22.6	-45°	6.4	9.4	27.4	-38°	7.0	10.7	30.8	-33°
5.5 M	3.4	5.2	13.4	-58°	5.2	7.9	20.7	-48°	5.8	8.5	22.6	-44°	4.3	6.7	18.3	-53°	5.5	8.2	21.9	-46°	4.9	7.3	20.1	-51°	6.1	9.1	25.9	-43°	7.0	10.7	26.9	-37°

2.2 Location Recommendations

NOTE: Venting requirements may affect location. Consult the Venting Manual for this heater before making final determination.

Locate the heater so that it is a minimum of five feet (1.5M) above the floor and in compliance with the clearances in Paragraph 4.1.

WARNING: If touched, the vent pipe and internal heater surfaces that are accessible from outside the heater will cause burns. Suspend the heater a minimum of 5 feet (1.5M) above the floor.

For best results, the heater should be placed with certain rules in mind. In general, a unit should be located from 8 to 12 feet (2.4-3.7M) above the floor. Units should always be arranged to blow toward or along exposed wall surfaces, if possible. Where two or more units are installed in the same room, a general scheme of air circulation should be maintained for best results.

Suspended heaters are most effective when located as close to the working zone as possible, and this fact should be kept in mind when determining the mounting heights to be used. However, care should be exercised to avoid directing the discharged air directly on the room occupants.

Partitions, columns, counters, or other obstructions should be taken into consideration when locating the unit heater so that a minimum quantity of airflow will be deflected by such obstacles.

When units are located in the center of the space to be heated, the air should be discharged toward the exposed walls. In large areas, units should be located to discharge

2.0 Unit Heater Location (cont'd)

2.2 Location Recommendations (cont'd)

air along exposed walls with extra units provided to discharge air in toward the center of the area.

At those points where infiltration of cold air is excessive, such as at entrance doors and shipping doors, it is desirable to locate the unit so that it will discharge directly toward the source of cold air from a distance of 15 to 20 feet (4.6-6.1M).

CAUTION: Do not locate the heater where it may be exposed to water spray, rain, or dripping water.

For a location where dirt, dust, or other airborne contaminants are present in the indoor environment, it is recommended to install a separated-combustion unit, Model UDAS, that uses outside air for combustion. Using a separated-combustion unit will reduce the build-up of contaminants on the burner. Any buildup on the burner will adversely affect the combustion process.

Hazards of Chlorine - applies to location of Model UDAS heater with regard to combustion air inlet

The presence of chlorine vapors in the combustion air of gas-fired heating equipment presents a potential corrosion hazard. Chlorine found usually in the form of freon or degreaser vapors, when exposed to flame will precipitate from the compound, and go into solution with any condensation that is present in the heat exchanger or associated parts. The result is hydrochloric acid which readily attacks all metals including 300 grade stainless steel. Care should be taken to separate these vapors from the combustion process. This may be done by wise location of the unit vent and combustion air terminals with regard to exhausters or prevailing wind directions. Chlorine is heavier than air. Keep these facts in mind when determining installation location of the heater in relation to building exhaust systems.

3.0 Uncrating and Preparation

3.1 Uncrating and Inspecting

This unit was test operated and inspected at the factory prior to crating and was in operating condition. If the heater has incurred any damage in shipment, document the damage with the transporting agency and contact an authorized Reznor Distributor. If you are an authorized Distributor, follow the FOB freight policy procedures as published by Thomas & Betts for Reznor products.

Check the rating plate for the gas specifications and electrical characteristics of the heater to be sure that they are compatible with the gas and electric supplies at the installation site.

3.2 Preparing for Installation

Read this booklet and become familiar with the installation requirements of your particular heater. If you do not have knowledge of local requirements, check with the local gas company or any other local agencies who might have requirements concerning this installation. Before beginning, make preparations for necessary supplies, tools, and manpower.

IMPORTANT: Shipping brackets are attached with cabinet screws. When removing shipping brackets, re-insert ALL screws into the cabinet.

3.2.1 Field-Installed Parts

If the installation includes optional vertical louvers, downturn nozzle, ceiling mounting bracket, hanger kit, high altitude kit, multiple heater control, sensor for DDC control, and/or stepdown transformer, **install these options before the heater is suspended.** Complete instructions are in this form or in the option package; option packages are shipped separately.

Other shipped separate items could include a vent cap (Option CC1 for UDAP); a vent/combustion air kit (Option CC2 or CC6 for UDAS); a manual gas valve; a thermostat bracket kit; a thermostat; and/or a thermostat guard. Be sure all options ordered are at the installation site.

High Altitude Kit, Option DJ20 or DJ21

If the heater is being installed at an elevation above 2000 ft (610M), the input rate will have to be derated. This is done by adjusting the valve outlet pressure.

In addition, if the heater is being installed at an altitude above 6000 ft (1830M), the pressure switch will have to be changed. If ordered with the unit as Option DJ20 or DJ21, the pressure switch is shipped separately for field installation.

Gas valve adjustment for high altitude can only be done after heater is operating; see Paragraph 6.1.

Adjusting the valve outlet pressure is done after the heater is in operation; follow the instructions in Paragraph 6.1. Capacities and inputs for derated units are also listed in Paragraph 6.1.

If the pressure switch needs to be changed, do that before the heater is operated; follow the instructions in **FIGURE 2**.

FIGURE 2 - Installing High Altitude Pressure Switch required above 6000 ft (1830M) elevation

Pressure Switch

Model UDAP														
Size	**30**	**45**	**60**	**75**	**100**	**125**	**150**	**175**	**200**	**225**	**250**	**300**	**350**	**400**
High Altitude Switch P/N	197031		197032			197031			201160					
Negative Pressure OFF Setpoint "w.c.	0.35		0.45			0.35			1.05					
Label color	Purple		Pink			Purple			Brown					
Model UDAP-CV with Option AV6 for Common Venting														
Size	**30**	**45**	**60**	**75**	**100**									
High Altitude Switch P/N	197029	197032	196362		196388									
Negative Pressure OFF Setpoint "w.c.	0.60	0.45	0.55		0.50									
Label color	Lt Blue	Pink	White		Orange									
Model UDAS														
Size	**30**	**45**	**60**	**75**	**100**	**125**	**150**	**175**	**200**	**225**	**250**	**300**	**350**	**400**
High Altitude Switch P/N	197029				196388	197030	197031		201160					
Differential Pressure OFF Setpoint "w.c.	0.60				0.50	0.40	0.35		1.05					
Label color	Lt. Blue				Orange	Green	Purple		Brown					

Instructions for Changing Pressure Switch

1. In the control compartment, locate the pressure switch.
2. Mark and disconnect the two wires attached to the pressure switch.
3. Disconnect the sensing tubes from the pressure switch.
4. Locate the two screws holding the switch mounting bracket. Remove the screws and the pressure switch. Save the screws.
5. Using the same screws, install the high altitude pressure switch. Attach the sensing tubes and wires.

Downturn Nozzle Kits, Option CD 2, 3, or 4

Follow the instructions with the kit to install. Additional length beyond the front of the unit is shown in **FIGURE 3.**

FIGURE 3 - With Optional Downturn Nozzle Dimension "U" -- Applies to both UDAP and UDAS

Downturn nozzles require 4-pt suspension.

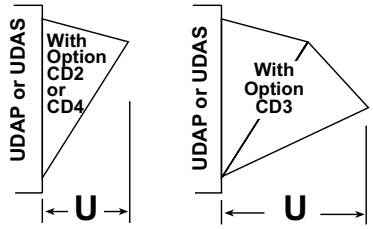

Size	Options CD2 and CD4		Option CD3	
	inches	mm	inches	mm
30, 45	7-1/8	181	12-3/8	314
60, 75	8-5/8	219	15	381
100, 125	12-5/8	321	21-7/8	556
150, 175, 200	11-1/2	292	19-7/8	505
225, 250	14-1/2	368	25-1/8	638
300, 350, 400	18-1/2	470	32	813

4.0 Clearances and Dimensions

4.1 Clearances

Units must be installed so that the clearances in the table are provided for combustion air space, inspection and service, and for proper spacing from combustible construction. Clearance to combustibles is defined as the minimum distance from the heater to a surface or object that is necessary to ensure that a surface temperature of 90°F above the surrounding ambient temperature is not exceeded.

Clearances

Size	Top		Flue Connector		Access Panel		Non-Access Side		Bottom*		Rear	
	inches	mm	inches	mm	inches	mm	inches	mm	inches	mm	inches	mm
30 - 125	1	25	6	152	18	457	1	25	1	25	18	457
150 - 400	4	102	6	152	18	457	2	51	1	25	18	457

*Suspend the heater so that the bottom is a minimum of 5 feet (1.5M) above the floor.

4.0 Clearances and Dimensions (cont'd)

4.2 Dimensions

FIGURE 4 - Model UDAP, Power Vented Fan Model

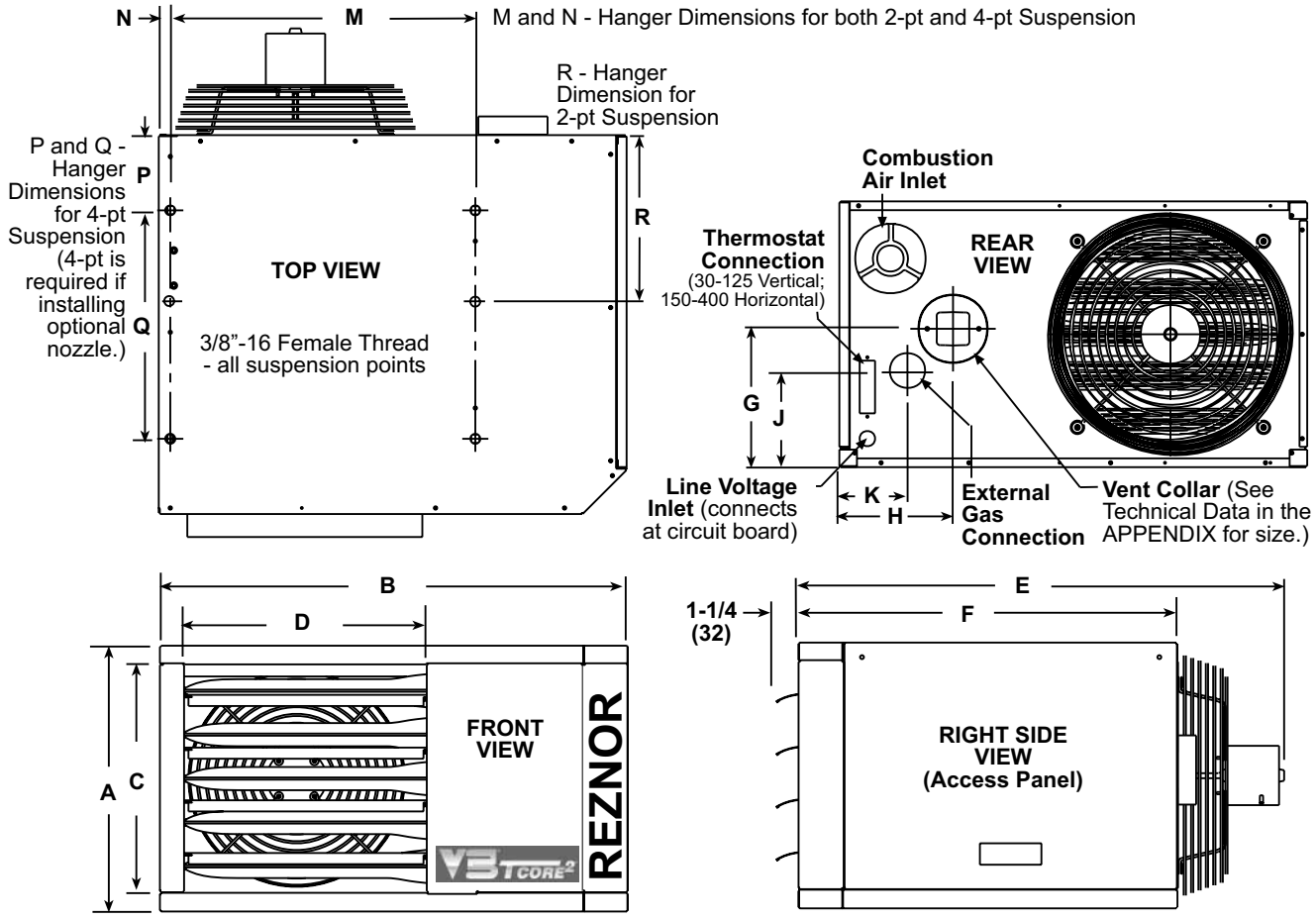

Model UDAP Dimensions (inches ± 1/16)

Size	A	B	C	D	E	F	G	H	J	K	M	N	P	Q	R
30, 45	12-1/8	26-5/8	10	13-13/16	26	21-9/16	5-3/16	6-1/2	2-11/16	3-7/8	17-3/8	11/16	4-5/16	13	9-9/16
60	15-1/8	26-5/8	13	13-13/16	27	21-9/16	7-7/8	6-1/2	5-1/2	3-7/8	17-3/8	11/16	4-5/16	13	10-1/2
75	15-1/8	26-5/8	13	13-13/16	27-5/8	21-9/16	7-7/8	6-1/2	5-1/2	3-7/8	17-3/8	11/16	4-5/16	13	10-1/2
100	23-1/8	26-5/8	21	13-13/16	28-5/8	21-9/16	14-1/2	6-1/2	8-3/4	3-7/8	17-3/8	11/16	4-5/16	13	10-1/2
125	23-1/8	26-5/8	21	13-13/16	29-3/8	21-9/16	14-1/2	6-1/2	8-3/4	3-7/8	17-3/8	11/16	4-5/16	13	10-1/2
150, 175, 200	20-1/8	38-3/16	16	23	42	35-3/8	8-1/2	8-1/4	5-7/16	6-1/2	25-11/16	1-3/8	8-3/16	22-3/16	16-3/8
225, 250	26-1/8	38-3/16	22	23	42	35-3/8	13-1/16	8-13/16	9	6-1/2	25-11/16	1-3/8	8-3/16	22-3/16	15-5/8
300, 350, 400	34-1/8	41	30	23	42	35-3/8	17-1/16	9	11-13/16	7-5/16	27-11/16	1-3/8	8-3/16	22-3/16	16-3/16

Model UDAP Dimensions (mm ± 2)

Size	A	B	C	D	E	F	G	H	J	K	M	N	P	Q	R
30, 45	308	676	254	351	660	548	132	165	68	98	441	17	110	330	243
60	384	676	330	351	686	548	200	165	140	98	441	17	110	330	267
75	384	676	330	351	702	548	200	165	140	98	441	17	110	330	267
100	587	676	533	351	727	548	368	165	222	98	441	17	110	330	267
125	587	676	533	351	746	548	368	165	222	98	441	17	110	330	267
150, 175, 200	511	970	406	584	1067	899	216	210	138	165	652	35	208	564	416
225, 250	664	970	559	584	1067	899	332	224	229	165	652	35	208	564	397
300, 350, 400	867	1041	762	584	1067	899	433	229	300	186	703	35	208	564	411

FIGURE 5 - Model UDAS, Separated Combustion Fan Model

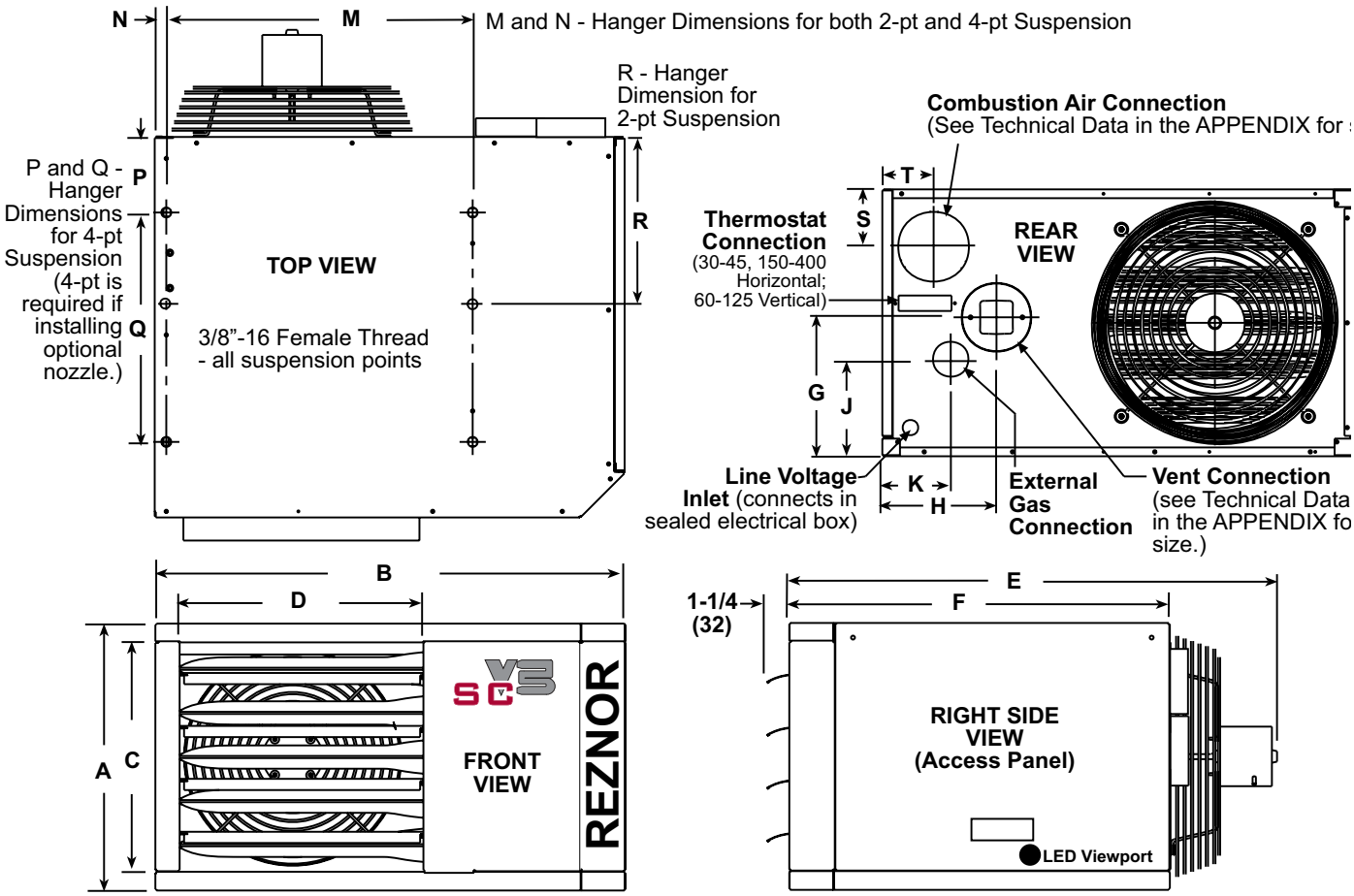

Model UDAS Dimensions (inches ± 1/16)

Size	A	B	C	D	E	F	G	H	J	K	M	N	P	Q	R	S	T
30, 45	12-1/8	26-5/8	10	13-13/16	26	21-9/16	5-3/16	6-1/2	2-11/16	3-7/8	17-3/8	11/16	4-5/16	13	9-9/16	2-15/16	2-15/16
60	15-1/8	26-5/8	13	13-13/16	27	21-9/16	7-7/8	6-1/2	5-1/2	3-7/8	17-3/8	11/16	4-5/16	13	10-1/2	3-1/4	2-15/16
75	15-1/8	26-5/8	13	13-13/16	27-5/8	21-9/16	7-7/8	6-1/2	5-1/2	3-7/8	17-3/8	11/16	4-5/16	13	10-1/2	3-1/4	2-15/16
100	23-1/8	26-5/8	21	13-13/16	28-5/8	21-9/16	14-1/2	6-1/2	8-3/4	3-7/8	17-3/8	11/16	4-5/16	13	10-1/2	4-5/8	2-15/16
125	23-1/8	26-5/8	21	13-13/16	29-3/8	21-9/16	14-1/2	6-1/2	8-3/4	3-7/8	17-3/8	11/16	4-5/16	13	10-1/2	4-5/8	2-15/16
150, 175, 200	20-1/8	38-3/16	16	23	42	35-3/8	8-1/2	8-1/4	5-7/16	6-1/2	25-11/16	1-3/8	8-3/16	22-3/16	16-3/8	4-1/8	8-5/16
225, 250	26-1/8	38-3/16	22	23	42	35-3/8	13-1/16	8-13/16	9	6-1/2	25-11/16	1-3/8	8-3/16	22-3/16	15-5/8	5-9/16	8-5/16
300, 350, 400	34-1/8	41	30	23	42	35-3/8	17-1/16	9	11-13/16	7-5/16	27-11/16	1-3/8	8-3/16	22-3/16	16-3/16	9-1/16	8-9/16

Model UDAS Dimensions (mm ± 2)

Size	A	B	C	D	E	F	G	H	J	K	M	N	P	Q	R	S	T
30, 45	308	676	254	351	660	548	132	165	68	98	441	17	110	330	243	75	75
60	384	676	330	351	686	548	200	165	140	98	441	17	110	330	267	89	75
75	384	676	330	351	702	548	200	165	140	98	441	17	110	330	267	89	75
100	587	676	533	351	727	548	368	165	222	98	441	17	110	330	267	117	75
125	587	676	533	351	746	548	368	165	222	98	441	17	110	330	267	117	75
150, 175, 200	511	970	406	584	1067	899	216	210	138	165	652	35	208	564	416	105	211
225, 250	664	970	559	584	1067	899	332	224	229	165	652	35	208	564	397	141	211
300, 350, 400	867	1041	762	584	1067	899	433	229	300	186	703	35	208	564	411	230	217

5.0 Hanging the Heater

5.1 Weights

Before suspending the heater, check the supporting structure to be used to verify that it has sufficient load-carrying capacity to support the weight of the unit.

Model UDAP

Size	30	45	60	75	100	125	150	175, 200	225	250	300	350	400
lbs	54	59	67	72	96	101	172	187	203	215	269	294	306
kg	24	27	30	33	44	46	78	85	92	98	122	133	139

Model UDAS

Size	30	45	60	75	100	125	150	175, 200	225	250	300	350	400
lbs	55	60	68	73	97	102	173	188	204	216	270	295	307
kg	25	27	31	33	44	46	78	85	93	98	122	134	138

WARNINGS: Check the supporting structure to be used to verify that it has sufficient load carrying capacity to support the weight of the unit. Suspend the heater only from the threaded nut retainers or with a manufacturer provided kit. Do NOT suspend from the heater cabinet.

5.2 Lifting and Suspending

When the heater is lifted for suspension, support the bottom of the heater with plywood or other appropriately placed material. If the bottom is not supported, damage could occur. Before hanging, verify that any screws used for holding shipping brackets were re-installed in the cabinet.

Model UDAS - Whether using the suspension points or a hanger kit, when installing a Model UDAS, any **unused suspension points on the control side of the heater MUST be plugged**. Plug these holes with the 1/2” long cap screws and flat washers shipped in the bag with the heater. (See **FIGURE 6**.)

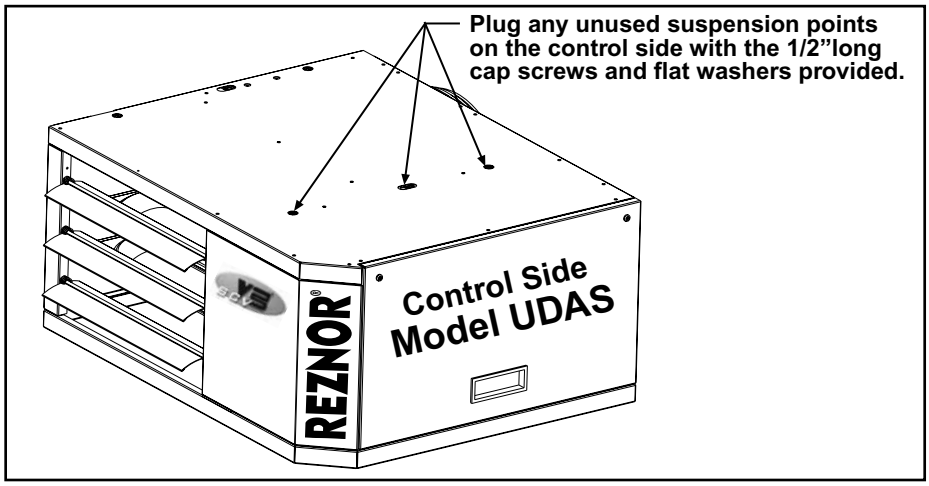

FIGURE 6 - Model UDAS - Plug the unused suspension points on the control side of the heater with the 1/2” long screws and flat washers. Find the screws and washers in the literature bag shipped inside the heater.

WARNING: Unit must be level for proper operation. Do not place or add additional weight to the suspended heater. Hazard Levels, page 2.

5.2.1 Two-Point or Four-Point Suspension

The heater is equipped for either two-point or four-point suspension. A 3/8”-16 threaded nut retainer is located at each suspension point. **NOTE:** Four-point suspension is **required** when installing an optional downturn nozzle. See Dimensions in Paragraph 4.2 and the illustration in **FIGURE 7A**.

FIGURE 7A - Suspending the Heater with Rods from the Threaded Nut Retainers (either two or four point suspension)

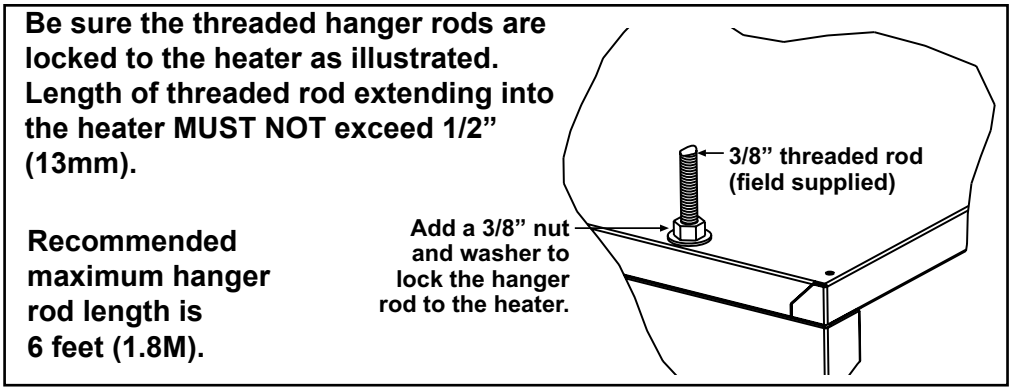

5.2.2 Hanger Kits, Option CK8, CK10, and CK22

If ordered with swivel connectors for 1" pipe, Option CK8 or CK10, attach the swivels at the threaded nut retainers. Suspend with 1" pipe. (See **FIGURE 7B**.)

FIGURE 7B - Swivel Connectors to Suspend the Heater from 1" Pipe, Option CK8 (2-pt) or CK10 (4-pt)

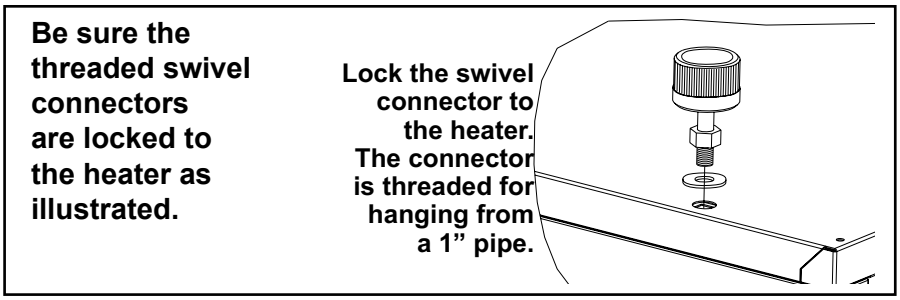

If ordered with a ceiling suspension kit, Option CK22, follow the illustrated instructions in the kit. (See **FIGURE 8**.)

FIGURE 8 - Suspending the Heater using Option CK22, Ceiling Suspension Kit (no hanger rods)

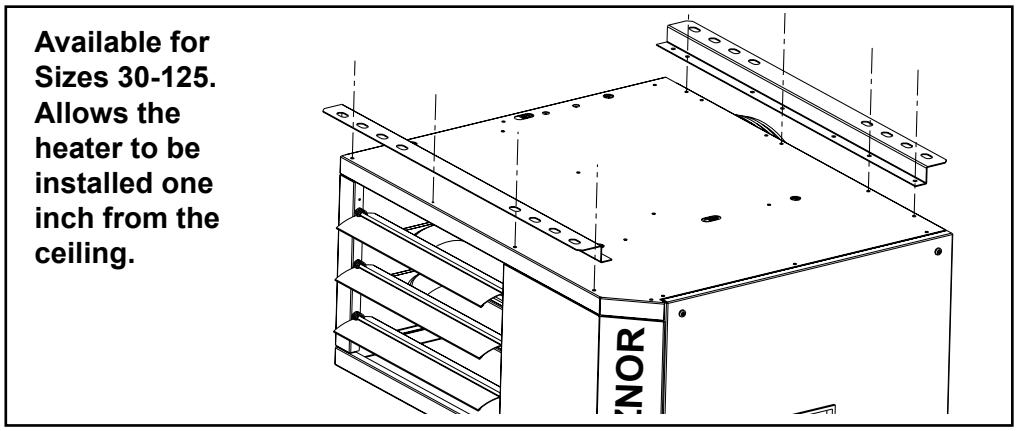

6.0 Mechanical

6.1 Gas Piping and Pressures

6.1.1 Gas Supply and Connections

WARNING: This appliance is equipped for a maximum gas supply pressure of 1/2 psi, 3.5 kPa, or 14 inches water column. Supply pressure greater than 1/2 psi requires installation of an additional lockup-type service regulator external to the unit.

WARNING: PRESSURE TESTING SUPPLY PIPING

Test Pressures Above 1/2 PSI: Disconnect the heater and manual valve from the gas supply line which is to be tested. Cap or plug the supply line.

Test Pressures Below 1/2 PSI: Before testing, close the manual valve on the heater.

6.1 Gas Piping and Pressures (cont'd)

6.1.1 Gas Supply and Connections (cont'd)

Sizing Gas Supply Line

Capacity of Piping Cubic Feet per Hour based on 0.3" w.c. Pressure Drop Specific Gravity for Natural Gas -- 0.6 (Natural Gas -- 1000 BTU/Cubic Ft) Specific Gravity for Propane Gas -- 1.6 (Propane Gas -- 2550 BTU/Cubic Ft)												
Length of Pipe	Diameter of Pipe											
	1/2"		3/4"		1"		1-1/4"		1-1/2"		2"	
	Natural	Propane	Natural	Propane	Natural	Propane	Natural	Propane	Natural	Propane	Natural	Propane
20'	92	56	190	116	350	214	730	445	1100	671	2100	1281
30'	73	45	152	93	285	174	590	360	890	543	1650	1007
40'	63	38	130	79	245	149	500	305	760	464	1450	885
50'	56	34	115	70	215	131	440	268	670	409	1270	775
60'	50	31	105	64	195	119	400	244	610	372	1105	674
70'	46	28	96	59	180	110	370	226	560	342	1050	641
80'	43	26	90	55	170	104	350	214	530	323	990	604
90'	40	24	84	51	160	98	320	195	490	299	930	567
100'	38	23	79	48	150	92	305	186	460	281	870	531
125'	34	21	72	44	130	79	275	168	410	250	780	476
150'	31	19	64	39	120	73	250	153	380	232	710	433
175'	28	17	59	36	110	67	225	137	350	214	650	397
200'	26	16	55	34	100	61	210	128	320	195	610	372
Note: When sizing supply lines, consider possibilities of future expansion and increased requirements. Refer to National Fuel Gas Code for additional information on line sizing.												

All piping must be in accordance with requirements outlined in the National Fuel Gas Code ANSI/Z223.1a (latest edition) or CSA-B149.1 and B149.2 (See Paragraph 2). Gas supply piping installation should conform with good practice and with local codes. Support gas piping with pipe hangers, metal strapping, or other suitable material; do not rely on the heater to support the gas pipe.

The heater is orificed for operation with natural gas having a heating value of 1000 (± 50) BTU per cubic ft or propane gas with a heating value of 2500 (± 100) BTU per cubic ft. If the gas at the installation does not meet these specifications, consult the factory for proper orificing.

Pipe joint compounds (pipe dope) shall be resistant to the action of liquefied petroleum gas or any other chemical constituents of the gas being supplied.

Install a ground joint union and manual shutoff valve upstream of the unit control system, as shown in **FIGURE 9**. Installation of a trap with a minimum 3" (76mm) drip leg is required.

The unit is equipped with a nipple that extends outside the cabinet. The gas connection is either 1/2" or 3/4".

Leak-test all connections by brushing on a leak-detecting solution.

WARNING: All components of a gas supply system must be leak tested prior to placing equipment in service. NEVER TEST FOR LEAKS WITH AN OPEN FLAME. Failure to comply could result in personal injury, property damage or death.

Gas Connection Size

Gas Connection (inches)		
Size	**Natural**	**Propane**
30, 45, 60, 75, 100, 125, 150, 175, 200	**1/2**	**1/2**
225, 250, 300, 350, 400	**3/4**	**3/4**

FIGURE 9 - Gas connection is at the pipe nipple that extends outside the cabinet.

Illustration shows both a vertical and horizontal gas supply; requirements are the same.

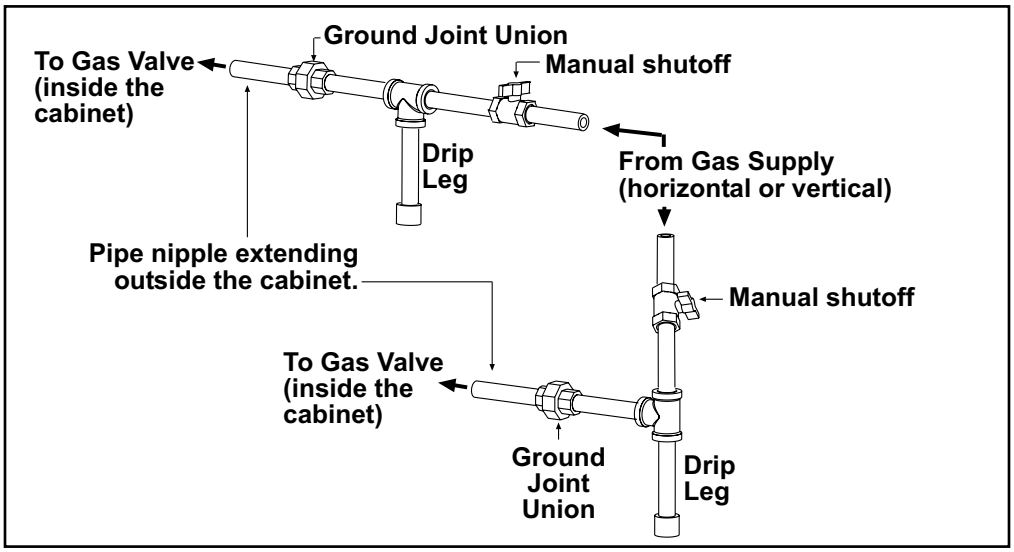

6.1.2 Valve Outlet or Orifice Pressure Setting

NOTE: Gas Conversion Kits are available for changing from propane gas to natural gas or natural gas to propane gas. A factory-authorized conversion kit MUST be used.

Measuring valve outlet gas pressure cannot be done until the heater is in operation. It is included in the steps of the "Check-Test-Start" procedure in Paragraph 9. The following warnings and instructions apply.

WARNING: Valve outlet gas pressure must never exceed 3.5" w.c. for natural gas and 10" w.c. for propane gas.

For Natural Gas: When the heater leaves the factory, the combination gas valve is set so that the valve outlet gas pressure for a single-stage valve or high fire of a two-stage valve is regulated to 3.5" w.c. Low fire on a two-stage valve is set to 1.8" w.c. Inlet supply pressure to the valve for natural gas must be a minimum of 5" w.c. or as noted on the rating plate and a maximum of 14" w.c.

For Propane Gas: When the heater leaves the factory, the combination gas valve is set so that the valve outlet gas pressure for a single-stage valve or high fire of a two-stage valve is regulated to 10" w.c. Low fire on a two-stage valve is set to 5.0" w.c. Inlet supply pressure to the valve for propane gas must be a minimum of 11" w.c. and a maximum of 14" w.c.

Before attempting to measure or adjust valve outlet gas pressure, the inlet supply pressure *must* be within the specified range both when the heater is in operation and on standby. Incorrect inlet pressure could cause excessive valve outlet gas pressure immediately or at some future time. If natural gas supply pressure is too high, install a regulator in the supply line before it reaches the heater. If natural gas supply pressure is too low, contact your gas supplier.

Check Valve Outlet Pressure (can only be done after heater is operating)

NOTE: If operating at high altitude, outlet pressure requires adjustment. Follow instructions on page 14.

FIGURE 10 - Top View of Valves showing Outlet Pressure Tap and Adjustment Locations

Instructions

1) Locate the 1/8" output pressure tap on the valve (See **FIGURE 10**). With the manual valve turned off to prevent flow to the gas valve, connect a manometer to the 1/8" pipe outlet pressure tap in the valve. NOTE: A manometer (fluid-filled gauge) is recommended rather than a spring type gauge due to the difficulty of maintaining calibration of a spring type gauge.

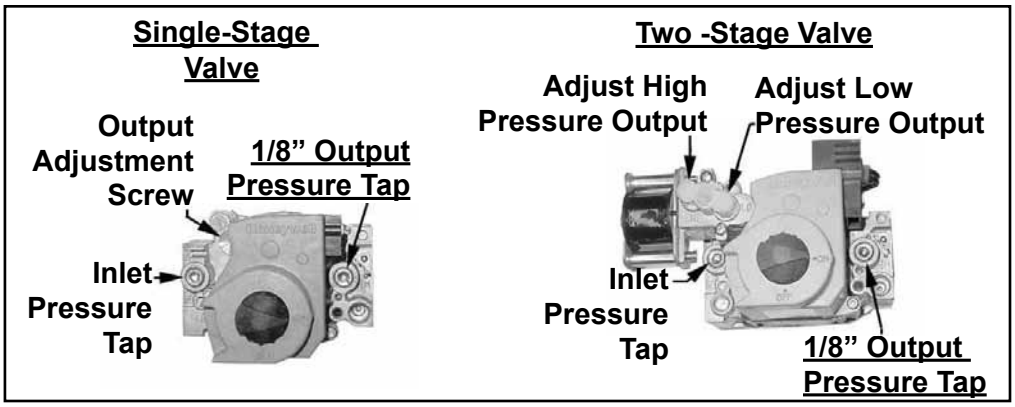

6.0 Mechanical (cont'd)

6.1 Gas Piping and Pressures (cont'd)

6.1.2 Valve Outlet or Orifice Pressure Setting (cont'd)

2) Open the manual valve and operate the heater. (NOTE: On Model UDAS, depress and hold the door safety switch.) Measure the outlet pressure of the gas valve. To measure low-stage pressure on a unit equipped with a two-stage valve, disconnect the wire from the "HI" terminal on the valve. (Be sure to reconnect the wire.)
Normally when operating at sea level, adjustments should not be necessary to the factory setting. (For high altitude settings, see next paragraph.)
If adjustment is necessary, remove the cap from the adjustment screw(s). Set pressure to correct settings by turning the regulator screw IN (clockwise) to increase pressure. Turn regulator screw OUT (counterclockwise) to decrease pressure.

CAUTION: DO NOT bottom out the gas valve regulator adjusting screw. This can result in unregulated manifold pressure causing excess overfire and heat exchanger failure.

6.1.3 Derate by Valve Outlet Pressure Adjustment for High Altitude Operation

This adjustment can only be done after the heater is in operation. High altitude adjustment is included in the startup Steps.

NOTE: If elevation is above 6000 ft (1830M), a high altitude pressure switch is required; see Paragraph 3.2.1.

Instructions for High Altitude Derate

1. Determine the required valve outlet pressure for the elevation where the heater will be operating. If unsure of the elevation, contact the local gas supplier.

Valve Outlet Pressure Settings by Elevation

Manifold Pressure Settings by Altitude for the UNITED STATES					
Altitude		Natural Gas (inches w.c.)		Propane Gas (inches w.c.)	
Feet	Meters	Single-Stage and Two-Stage High Fire	Two-Stage Low Fire	Single-Stage and Two-Stage High Fire	Two-Stage Low Fire
0-2000	0-610	3.5	1.8	10.0	5.0
2001-3000	611-915	3.1	1.6	8.8	4.4
3001-4000	916-1220	3.0	1.5	8.5	4.2
4001-5000	1221-1525	2.8	1.5	8.1	4.1
5001-6000	1526-1830	2.7	1.4	7.7	3.9
6001-7000	1831-2135	2.6	1.3	7.4	3.7
7001-8000	2136-2440	2.5	1.3	7.1	3.5
8001-9000	2441-2745	2.4	1.2	6.7	3.4
9001-10000	2746-3045	2.3	1.2	6.7	3.4

Manifold Pressure Settings by Altitude for CANADA					
Altitude		Natural Gas (inches w.c.)		Propane Gas (inches w.c.)	
Feet	Meters	Single-Stage and Two-Stage High Fire	Two-Stage Low Fire	Single-Stage and Two-Stage High Fire	Two-Stage Low Fire
0-2000	0-610	3.5	1.8	10.0	5.0
2001-4500	611-1373	2.8	1.5	8.1	4.1

2. Locate the 1/8" output pressure tap on the valve (See **FIGURE 10**, page 13). Turn the knob on the top of the valve to "OFF". Connect a manometer to the 1/8" pipe outlet pressure tap in the valve. Use a water column manometer that is readable to the nearest tenth of an inch.
3. **Single-Stage and Two-Stage High Fire** - Turn the knob on the top of the valve to "ON". Remove the cap from the pressure adjusting screw and adjust the gas train pressure to the pressure selected from the table above. Adjust pressure by turning the regulator screw IN (clockwise) to increase pressure or OUT (counterclockwise) to decrease pressure.
   Two-Stage Low Fire - Disconnect the wire from the "HI" terminal on the gas valve and check the low fire pressure. Turn the regulator screw to adjust the low fire outlet pressure to the "Low Fire" pressure selected from the table. Re-connect the wire to the gas valve.
4. Turn up the thermostat. (**NOTE**: On Model UDAS, depress and hold the door safety switch.) Cycle the burner once or twice to properly seat the adjustment spring in the valve.
   Re-check the pressure(s). When the outlet pressure is right for the installation, remove the manometer and replace the cap.
   Check for leak at the pressure tap fitting.

5. With the heater operating determine that the inlet pressure to the heater for natural gas is between 5 and 13.5 inches w.c. and for propane between 10 and 13.5 inches w.c. Take this reading as close as possible to the heater (Heaters are equipped with gas valves that have an inlet pressure tap.) If the inlet pressure is not within the specified range, the inlet pressure must be corrected and Steps 3 and 4 repeated.
6. Find the High Altitude Adjustment label in the plastic bag that contained these instructions. Using a permanent marker, fill-in the appropriate information from the tables below. Select a location for the label on the outside of the heater access panel so that it will be conspicuous to anyone operating or servicing the unit. Be sure the surface is clean and dry and adhere the label.

High Altitude Capacity Changes

The input and/or the capacity of the heater changes with the derate. The tables below list inputs and capacities at altitudes from sea level to 10,000 ft (3045M).

BTUH Inputs and Capacities by Altitude in the UNITED STATES for Model UDAP and Model UDAS

ALTITUDE		Normal Input	Thermal Output Capacity	Minimum Input	Normal Input	Thermal Output Capacity	Minimum Input	Normal Input	Thermal Output Capacity	Minimum Input	Normal Input	Thermal Output Capacity	Minimum Input
Feet	**Meters**	**Size 30**			**Size 45**			**Size 60**			**Size 75**		
0-2000	0-610	30000	24600	30000	45000	37350	45000	60000	49800	42000	75000	62250	52500
2001-3000	611-915	28200	23124	28200	42300	35109	42300	56400	46812	39480	70500	58515	49350
3001-4000	916-1220	27600	22632	27600	41400	34362	41400	55200	45816	38640	69000	57270	48300
4001-5000	1221-1525	27000	22140	27000	40500	33615	40500	54000	44820	37800	67500	56025	47250
5001-6000	1526-1830	26400	21648	26400	39600	32868	39600	52800	43824	36960	66000	54780	46200
6001-7000	1831-2135	25800	21156	25800	38700	32121	38700	51600	42828	36120	64500	53535	45150
7001-8000	2136-2440	25200	20664	25200	37800	31374	37800	50400	41832	35280	63000	52290	44100
8001-9000	2441-2745	24600	20172	24600	36900	30627	36900	49200	40836	34440	61500	51045	43050
9001-10000	2746-3045	24000	19680	24000	36000	29880	36000	48000	39840	33600	60000	49800	42000
Feet	**Meters**	**Size 100**			**Size 125**			**Size 150**			**Size 175**		
0-2000	0-610	105000	88200	73500	120000	100800	84000	150000	124500	105000	175000	145250	122500
2001-3000	611-915	98700	82908	69090	112800	94752	78960	141000	117030	98700	164500	136535	115150
3001-4000	916-1220	96600	81144	67620	110400	92736	77280	138000	114540	96600	161000	133630	112700
4001-5000	1221-1525	94500	79380	66150	108000	90720	75600	135000	112050	94500	157500	130725	110250
5001-6000	1526-1830	92400	77616	64680	105600	88704	73920	132000	109560	92400	154000	127820	107800
6001-7000	1831-2135	90300	75852	63210	103200	86688	72240	129000	107070	90300	150500	124915	105350
7001-8000	2136-2440	88200	74088	61740	100800	84672	70560	126000	104580	88200	147000	122010	102900
8001-9000	2441-2745	86100	72324	60270	98400	82656	68880	123000	102090	86100	143500	119105	100450
9001-10000	2746-3045	84000	70560	58800	96000	80640	67200	120000	99600	84000	140000	116200	98000
Feet	**Meters**	**Size 200**			**Size 225**			**Size 250**			**Size 300**		
0-2000	0-610	200000	166000	140000	225000	186750	157500	250000	207500	175000	300000	249000	210000
2001-3000	611-915	188000	156040	131600	211500	175545	148050	235000	195050	164500	282000	234060	197400
3001-4000	916-1220	184000	152720	128800	207000	171810	144900	230000	190900	161000	276000	229080	193200
4001-5000	1221-1525	180000	149400	126000	202500	168075	141750	225000	186750	157500	270000	224100	189000
5001-6000	1526-1830	176000	146080	123200	198000	164340	138600	220000	182600	154000	264000	219120	184800
6001-7000	1831-2135	172000	142760	120400	193500	160605	135450	215000	178450	150500	258000	214140	180600
7001-8000	2136-2440	168000	139440	117600	189000	156870	132300	210000	174300	147000	252000	209160	176400
8001-9000	2441-2745	164000	136120	114800	184500	153135	129150	205000	170150	143500	246000	204180	172200
9001-10000	2746-3045	160000	132800	112000	180000	149400	126000	200000	166000	140000	240000	199200	168000
Feet	**Meters**	**Size 350**			**Size 400**								
0-2000	0-610	350000	290500	245000	400000	332000	280000						
2001-3000	611-915	329000	273070	230300	376000	312080	263200						
3001-4000	916-1220	322000	267260	225400	368000	305440	257600						
4001-5000	1221-1525	315000	261450	220500	360000	298800	252000						
5001-6000	1526-1830	308000	255640	215600	352000	292160	246400						
6001-7000	1831-2135	301000	249830	210700	344000	285520	240800						
7001-8000	2136-2440	294000	244020	205800	336000	278880	235200						
8001-9000	2441-2745	287000	238210	200900	328000	272240	229600						
9001-10000	2746-3045	280000	232400	196000	320000	265600	224000						

BTUH Inputs and Capacities by Altitude in CANADA for Models UDAP and UDAS

ALTITUDE		Normal Input	Thermal Output Capacity	Minimum Input	Normal Input	Thermal Output Capacity	Minimum Input	Normal Input	Thermal Output Capacity	Minimum Input	Normal Input	Thermal Output Capacity	Minimum Input
Feet	**Meters**	**Size 30**			**Size 45**			**Size 60**			**Size 75**		
0-2000	0-610	30000	24600	30000	45000	37350	45000	60000	49800	42000	75000	62250	52500
2001-4500	611-1373	27000	22140	27000	40500	33615	40500	54000	44820	37800	67500	56025	47250
Feet	**Meters**	**Size 100**			**Size 125**			**Size 150**			**Size 175**		
0-2000	0-610	105000	88200	73500	120000	100800	84000	150000	124500	105000	175000	145250	122500
2001-4500	611-1373	94500	79380	66150	108000	90720	75600	135000	113400	94500	157500	132300	110250
Feet	**Meters**	**Size 200**			**Size 225**			**Size 250**			**Size 300**		
0-2000	0-610	200000	166000	140000	225000	186750	157500	250000	207500	175000	300000	249000	210000
2001-4500	611-1373	180000	151200	126000	202500	170100	141750	225000	189000	157500	270000	226800	189000
Feet	**Meters**	**Size 350**			**Size 400**								
0-2000	0-610	350000	290500	245000	400000	332000	280000						
2001-4500	611-1373	315000	264600	220500	360000	302400	252000						

6.0 Mechanical (cont'd)

(Note: For Model UDAS, see Venting Manual for combustion air requirements.)

6.2 Combustion Air - Models UDAP and UDAP-CV

This heater must be supplied with the air that enters into the combustion process and is then vented to the outdoors. Sufficient air must enter the equipment location to replace that exhausted through the heater vent system. In the past, the infiltration of outside air assumed in heat loss calculations (one air change per hour) was assumed to be sufficient. However, current construction methods using more insulation, vapor barriers, tighter fitting and gasketed doors and windows, weather-stripping, and/or mechanical exhaust fans may now require the introduction of outside air through wall openings or ducts.

The requirements for combustion and ventilation air depend upon whether the unit is located in a confined or unconfined space. An "unconfined space" is defined as a space whose volume is not less than 50 cubic feet per 1000 BTUH of the installed appliance. **Under ALL conditions,** enough air must be provided to ensure there will not be a negative pressure condition within the equipment room or space.

WARNING: Model UDAP and UDAP-CV power-vented unit heaters are designed to take combustion air from the space in which the unit is installed and are not designed for connection to outside combustion air intake ducts. Connecting outside air ducts voids the warranty and could cause hazardous operation. See Hazard Levels, page 2.

Combustion Air Requirements for a Heater Located in a Confined Space - applies to Model UDAP and Model UDAP-CV

Do not install a unit in a confined space without providing wall openings leading to and from the space. Provide openings near the floor and ceiling for ventilation and air for combustion as shown in **FIGURE 11**, depending on the combustion air source as noted in Items 1, 2, and 3 below.

Add total BTUH of all appliances in the confined space and divide by figures below for square inch free area size of each (top and bottom) opening.

Confined Space:
A space whose volume is less than 50 cubic feet per 1000 BTUH of the installed appliance input rating

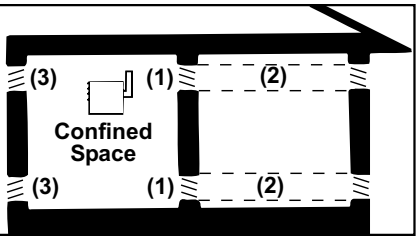

FIGURE 11 - Definition of Confined Space and Required Openings for Combustion Air

1. Air from inside the building -- openings 1 square inch free area per 1000 BTUH. Never less than 100 square inches of free area for each opening. See (1) in **FIGURE 11**.

2. Air from outside through duct -- openings 1 square inch free area per 2000 BTUH. See (2) in **FIGURE 11**.

3. Air direct from outside -- openings 1 square inch free area per 4000 BTUH. See (3) in **FIGURE 11**.

NOTE: For further details on supplying combustion air to a confined space, see the National Fuel Gas Code ANSI Z223.1a (latest edition).

7.0 Electrical Supply and Wiring

CAUTION: Route wires so that they do not contact the flue wrapper or venter housing.

7.1 General

All electrical wiring and connections, including electrical grounding MUST be made in accordance with the National Electric Code ANSI/NFPA No. 70 (latest edition) or, in Canada, with CSA Standard C22.1. In addition, the installer should be aware of any local ordinances or gas company requirements that might apply.

CAUTION: If any of the original wire as supplied with the appliance must be replaced, it must be replaced with wiring material having a temperature rating of at least 105°C, except for limit control, flame rollout, and sensor lead wires which must be 150°C. See Hazard Levels, page 2.

7.2 Supply Wiring

Check the rating plate on the heater for the supply voltage and current requirements. A dedicated line voltage supply with disconnect switch should be run directly from the main electrical panel to the heater. All external wiring must be within approved conduit and have a minimum temperature rise rating of 60°C. Conduit must be run so as not to interfere with the heater access panel. If the installation requires a stepdown transformer (Option CG), follow the instructions shipped with the option package for attaching the transformer to the heater.

The electrical supply enters at the rear of the heater (See **FIGURE 13**). Model UDAS includes a built-in disconnect switch (20A @ 115V; 10A @ 230V Rating). Model UDAS supply wiring connects to leads located inside a sealed electrical box. To maintain the sealing feature of the electrical box, always replace the cover plate. Model UDAP supply wiring connects directly to leads on the integrated circuit board.

The circuit board (See **FIGURE 12**) is located inside on the bottom of the control compartment. The circuit board is polarity sensitive. It is advisable to check the electrical supply to be certain that the black wire is the "hot" wire and that the white wire is the neutral wire. The supply connection made to "L1" on the circuit board must be the "hot" wire.

FIGURE 12 - Supply Wiring Connections at the Circuit Board (DSI Integrated Control Module)

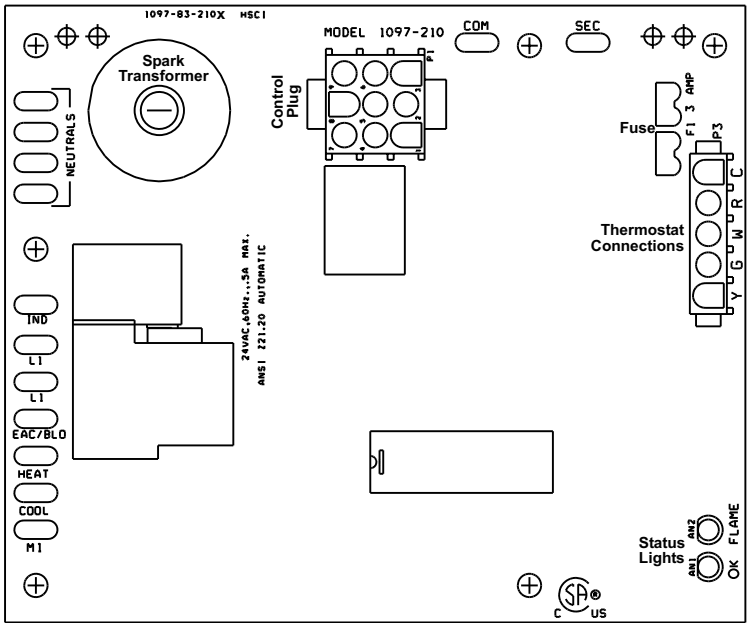

Supply Wiring Connections

NOTE: Circuit board is polarity sensitive; "hot" wire MUST BE connected to Terminal L1.

7.3 24V Control Wiring Connections

For all models, the terminal strip for 24 volt thermostat connections is located on the outside of the cabinet at the back of the heater (See **FIGURE 13**). Wires from the terminal strip are factory wired to the circuit board.

FIGURE 13 - Terminal Strip for 24-volt wiring is on the outside rear of the heater.

NOTE: The size of heater illustrated has a vertical terminal strip. Some sizes have a horizontal terminal strip.

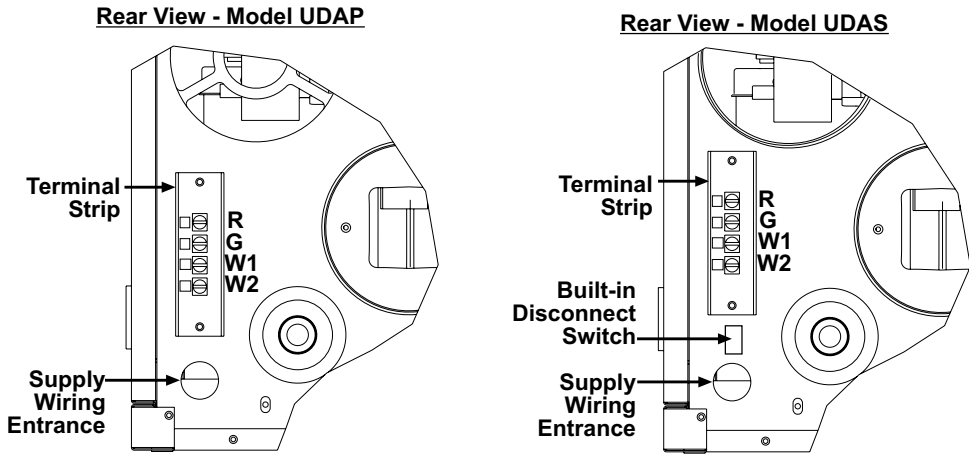

7.0 Electrical Supply and Wiring (cont'd)

7.4 Wiring Diagrams

FIGURE 14A - Typical Wiring Diagram for Model UDAP or Model UDAS, Single Stage

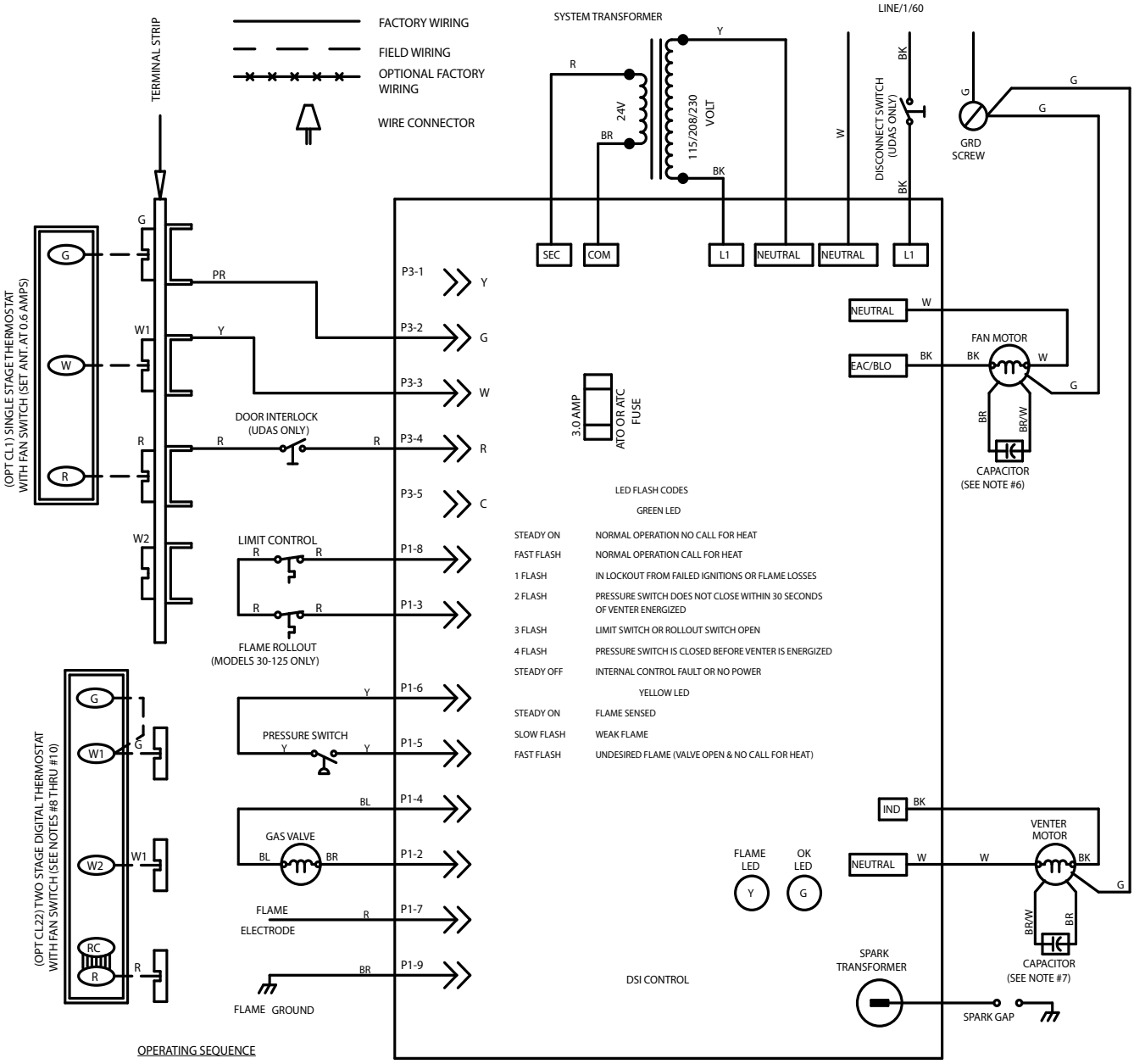

LED FLASH CODES

GREEN LED

STEADY ON	NORMAL OPERATION NO CALL FOR HEAT
FAST FLASH	NORMAL OPERATION CALL FOR HEAT
1 FLASH	IN LOCKOUT FROM FAILED IGNITIONS OR FLAME LOSSES
2 FLASH	PRESSURE SWITCH DOES NOT CLOSE WITHIN 30 SECONDS OF VENTER ENERGIZED
3 FLASH	LIMIT SWITCH OR ROLLOUT SWITCH OPEN
4 FLASH	PRESSURE SWITCH IS CLOSED BEFORE VENTER IS ENERGIZED
STEADY OFF	INTERNAL CONTROL FAULT OR NO POWER

YELLOW LED

STEADY ON	FLAME SENSED
SLOW FLASH	WEAK FLAME
FAST FLASH	UNDESIRED FLAME (VALVE OPEN & NO CALL FOR HEAT)

OPERATING SEQUENCE

1. SET THERMOSTAT AT LOWEST SETTING, (FAN SWITCH AT "AUTO" POSITION.
2. TURN ON MANUAL GAS VALVE.
3. TURN ON POWER TO UNIT.
4. SET THERMOSTAT AT DESIRED SETTING.
5. THERMOSTAT CALLS FOR HEAT, ENERGIZING THE VENTER MOTOR.
6. VENTER PRESSURE SWITCH CLOSES, FIRING UNIT AT FULL RATE.
7. BURNER FLAME IS SENSED, AND IN 30 SECONDS THE FAN MOTOR IS ENERGIZED.
8. IF THE FLAME IS EXTINGUISHED DURING MAIN BURNER OPERATION, THE INTEGRATED CONTROL SYSTEM CLOSES THE MAIN VALVE AND MUST BE RESET BY INTERRUPTING POWER TO THE CONTROL CIRCUIT (SEE LIGHTING INSTRUCTIONS).
9. SET FAN SWITCH AT "ON" POSITION FOR CONTINUOUS FAN OPERATION.

NOTES

1. THE FOLLOWING CONTROLS ARE FIELD INSTALLED OPTIONS: THERMOSTAT
2. DOTTED WIRING INSTALLED BY OTHERS.
3. CAUTION: IF ANY OF THE ORIGINAL WIRING AS SUPPLIED WITH THE APPLIANCE MUST BE REPLACED, IT MUST BE REPLACED WITH WIRING MATERIAL HAVING A TEMPERATURE RATING OF AT LEAST 105° C. EXCEPT FOR SENSOR LEAD WIRE, FLAME ROLLOUT AND LIMIT WIRING WHICH MUST BE 150° C.
4. USE 18 GA. WIRE FOR ALL WIRING ON THE UNIT.
5. LINE AND FAN MOTOR BRANCH WIRE SIZES SHOULD BE OF A SIZE TO PREVENT VOLTAGE DROPS BEYOND 5% OF SUPPLY LINE VOLTAGE.
6. CAPACITOR IS REMOTE MOUNTED AND INCLUDED ONLY ON 115V MODELS 150-400 AND 208/230V MODELS 100-400.
7. CAPACITOR IS REMOTE MOUNTED AND INCLUDED ONLY ON MODELS 150 - 400.
8. VERIFY JUMPER ON CL22 THERMOSTAT TERMINALS R TO RC.
9. FAN SWITCH OR LOW STAGE OF CL22 THERMOSTAT ENERGIZES THE BLOWER MOTOR.
10. HIGH STAGE OF CL22 THERMOSTAT INITIATES A CALL FOR HEAT.

FIELD CONTROL WIRING

TOTAL WIRE LENGTH	DISTANCE FROM UNIT TO CONTROL	MIN. RECOMMENDED WIRE GUAGE
150'	75'	#18 GA. WIRE
250'	125'	#16 GA. WIRE
350'	175'	#14 GA. WIRE

WIRING CODE
BLACK - BK
BROWN - BR
RED - R
ORANGE - O
YELLOW - Y
GREEN - G
BLUE - BL
PURPLE - PR
WHITE - W

UDAP & UDAS SERIES
WD# 185139 REV #4
AG1-CL1 or CL22

FIGURE 14B - Typical Wiring Diagram for Model UDAP or Model UDAS, Two Stage Gas Valve or Recirculation

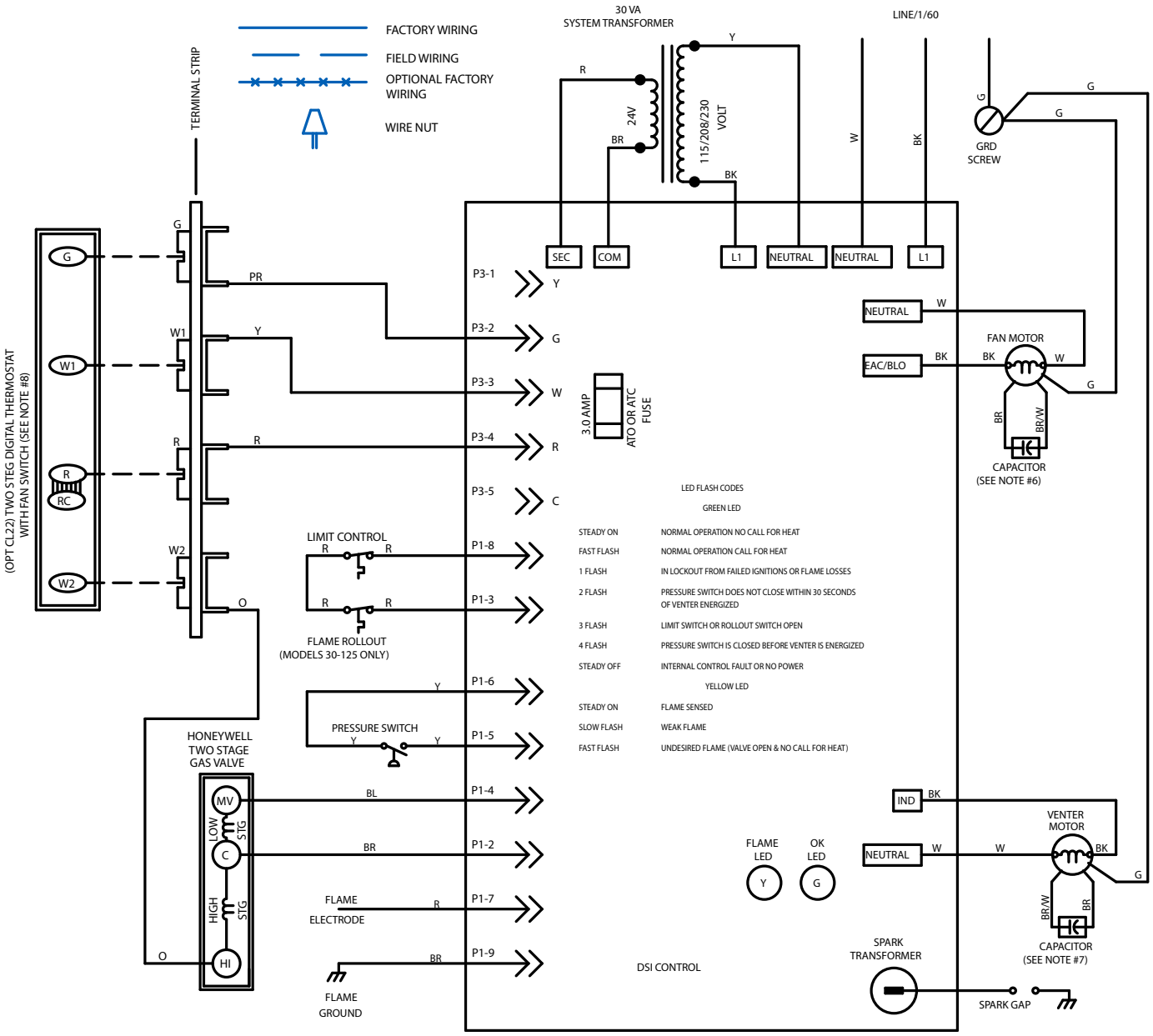

OPERATING SEQUENCE

1. SET THERMOSTAT AT LOWEST SETTING, FAN SWITCH AT "AUTO" POSITION.
2. TURN ON MANUAL GAS VALVE.
3. TURN ON POWER TO UNIT.
4. SET THERMOSTAT AT DESIRED SETTING.
5. LOW STAGE OF THERMOSTAT CALLS FOR HEAT, ENERGIZING THE VENTER MOTOR.
6. VENTER PRESSURE SWITCH CLOSES, FIRING UNIT AT LOW RATE.
7. BURNER FLAME IS SENSED, AND IN 30 SECONDS THE FAN MOTOR IS ENERGIZED.
8. HIGH STAGE OF THERMOSTAT CALLS FOR HEAT, FIRING UNIT AT FULL RATE.
9. SET FAN SWITCH AT "ON" POSITION FOR CONTINUOUS FAN OPERATION.
10. IF THE FLAME IS EXTINGUISHED DURING MAIN BURNER OPERATION, THE INTEGRATED CONTROL SYSTEM CLOSES THE MAIN VALVE AND MUST BE RESET BY INTERRUPTING POWER TO THE CONTROL CIRCUIT (SEE LIGHTING INSTRUCTIONS).

NOTES

1. THE FOLLOWING CONTROLS ARE FIELD INSTALLED OPTIONS: THERMOSTAT
2. DOTTED WIRING INSTALLED BY OTHERS.
3. CAUTION: IF ANY OF THE ORIGINAL WIRING AS SUPPLIED WITH THE APPLIANCE MUST BE REPLACED, IT MUST BE REPLACED WITH WIRING MATERIAL HAVING A TEMPERATURE RATING OF AT LEAST 105° C. EXCEPT FOR SENSOR LEAD WIRE, FLAME ROLLOUT AND LIMIT WIRING WHICH MUST BE 150° C.
4. USE 18 GA. WIRE FOR ALL WIRING ON THE UNIT.
5. LINE AND FAN MOTOR BRANCH WIRE SIZES SHOULD BE OF A SIZE TO PREVENT VOLTAGE DROPS BEYOND 5% OF SUPPLY LINE VOLTAGE.
6. CAPACITOR IS REMOTE MOUNTED AND INCLUDED ONLY ON 115V MODELS 150-400 AND 208/230V MODELS 100-400.
7. CAPACITOR IS REMOTE MOUNTED AND INCLUDED ONLY ON MODELS 150 - 400.
8. VERIFY JUMPER ON THERMOSTAT TERMINALS R TO RC.

FIELD CONTROL WIRING

TOTAL WIRE LENGTH	DISTANCE FROM UNIT TO CONTROL	MIN. RECOMMENDED WIRE GUAGE
150'	75'	#18 GA. WIRE
250'	125'	#16 GA. WIRE
350'	175'	#14 GA. WIRE

WIRING CODE
BLACK - BK
BROWN - BR
RED - R
ORANGE - O
YELLOW - Y
GREEN - G
BLUE - BL
PURPLE - PR
WHITE - W

UDAP & UDAS SERIES
AG2-CL22
WD# 185244 REV #2

7.0 Electrical Supply and Wiring (cont'd)

7.5 Electrical Operating Components

7.5.1 Combustion Air Proving (Pressure) Switch

The combustion air proving switch is a pressure sensitive switch that monitors air pressure to ensure that proper combustion airflow is available. On Model UDAP, the switch is a single pole/normally open device which closes when a negative pressure is sensed in the venter housing. On Model UDAS, the switch senses the differential pressure between the negative pressure in the venter housing and the pressure in the cabinet. (For switch location, see **FIGURE 18**, page 30.)

On startup when the heater is cold, the sensing pressure is at the most negative level, and as the heater and flue system warm up, the sensing pressure becomes less negative. After the system has reached equilibrium (about 20 minutes), the sensing pressure levels off.

If a restriction or excessive flue length or turns cause the sensing pressure to be outside the switch setpoint, the pressure switch will function to shutoff the main burner. The main burner will remain off until the system has cooled and/or the flue system resistance is reduced.

The Tables on the left below list the approximate water column negative pressure readings and switch setpoints for sea level operating conditions for Model UDAP and Model UDAP-CV heaters. The Table on the right lists the approximate water column differential pressure readings and switch setpoints for sea level operating conditions for Model UDAS heaters.

DANGER: Safe operation of this unit requires proper venting flow. NEVER bypass combustion air proving switch or attempt to operate the unit without the venter running and the proper flow in the vent system. Hazardous conditions could result. See Hazard Intensity Levels, page 2.

Pressure Switch Settings

Model UDAP	Startup Cold	Equilibrium Hot	Setpoint OFF	Setpoint ON	Label Color	Switch P/N
	Negative Pressure (" w.c.)					
30	1.0	0.8	0.4	0.6	Green	197030
45	1.0	0.8	0.4	0.6	Green	197030
60	1.0	0.8	0.5	0.7	Orange	196388
75	1.0	0.9	0.5	0.7	Orange	196388
100	0.9	0.7	0.5	0.7	Orange	196388
125	0.8	0.6	0.4	0.6	Green	197030
150, 175	0.8	0.7	0.4	0.6	Green	197030
200, 225	2.2	1.5	1.1	1.3	Blue	201158
250, 300	2.3	1.6	1.1	1.3	Blue	201158
350, 400	2.6	1.8	1.1	1.6	Red	201159

Model UDAS	Startup Cold	Equilibrium Hot	Setpoint OFF	Setpoint ON	Label Color	Switch P/N
	Differential Pressure (" w.c.)					
30	1.0	0.8	0.65	0.8	Yellow	197028
45	1.1	0.8	0.65	0.8	Yellow	197028
60	1.1	0.9	0.65	0.8	Yellow	197028
75	1.1	0.9	0.65	0.8	Yellow	197028
100	0.9	0.7	0.55	0.7	White	196362
125	0.8	0.6	0.45	0.6	Pink	197032
150, 175	0.8	0.6	0.40	0.6	Green	197030
200, 225	2.2	1.5	1.10	1.3	Blue	201158
250, 300	2.3	1.6	1.10	1.3	Blue	201158
350, 400	2.6	1.8	1.10	1.6	Blue	201158

Model UDAP-CV with Opt AV6	Startup Cold	Equilibrium Hot	Setpoint OFF	Setpoint ON	Label Color	Switch P/N
	Negative Pressure (" w.c.)					
30	1.1	0.8	0.65	0.8	Yellow	197028
45	1.1	0.8	0.50	0.7	Orange	196388
60	0.9	0.8	0.60	0.8	Lt Blue	197029
75	1.0	0.8	0.60	0.8	Lt Blue	197029
100	0.9	0.7	0.55	0.7	White	196362

7.5.2 Limit Control

All units are equipped with a temperature activated auto reset limit control. The control is factory set and is non-adjustable. If the setpoint is reached, the limit control will interrupt the electric supply to the gas valve. This safety device provides protection in the case of motor failure or lack of airflow due to a restriction at the inlet or outlet. (For location, see **FIGURE 18**, page 30.)

CAUTION: The auto reset limit control will continue to shut down the heater until the cause is corrected. Never bypass the limit control; hazardous conditions could result. See Hazard Intensity Levels, page 2.

Sizes 30-125 are equipped with a temperature activated manually reset flame rollout switch. The flame rollout switch is located at the top of the burner assembly. It is factory set and is non-adjustable. If the setpoint is reached, the flame rollout acts to interrupt the electric supply to the gas valve. If the flame rollout switch activates, identify and correct the cause before resetting the switch. Refer to the Maintenance Section, Paragraph 10.2.10, for information on probable causes and instructions on resetting the flame rollout switch. (For location, see **FIGURE 18**, page 30.)

DANGER: If the manual reset flame rollout switch activates, identify and correct the cause before resetting the switch. Never bypass the flame rollout switch; hazardous conditions could result. See Hazard Intensity Levels, page 2.

7.5.3 Door Switch - Model UDAS only

All sizes of Model UDAS heaters are equipped with a door switch which prevents the heater from operating when the service door panel is open. The service panel of a Model UDAS is equipped with a pliable gasket material that fully seals the door to provide added protection from building air entering the combustion zone of the heater. (For switch location, see **FIGURE 18**, page 30.)

7.5.4 Gas Valve

The main operating gas valve is powered by the 24-volt control circuit through the thermostat and safety controls. The main control valve is of the diaphragm type providing regulated gas flow preset at the factory. (For location, see **FIGURE 18**, page 30.)

WARNING: The operating valve is the prime safety shutoff. All gas supply lines must be free of dirt or scale before connecting the unit to ensure positive closure. See Hazard Levels, page 2.

7.5.5 Fan Motor

The fan motor is equipped with thermal overload protection of the automatic reset type. Should the motor refuse to run, it may be because of improper current characteristics. Make certain that the correct voltage is available at the motor.

NOTE: If the unit is equipped with an optional totally enclosed motor or optional voltage, the horsepower may be larger than the standard motor. Refer to the motor nameplate to verify horsepower.

7.5.6 Venter Motor

The venter motor is assembled to the venter wheel and operates to provide combustion airflow. Operation is controlled by the ignition control module (circuit board); refer to ignition system in Paragraph 8.3.

8.0 Controls and Operation

8.1 Thermostat

Use either an optional thermostat available with the heater or a field-supplied 24-volt thermostat. Install according to the thermostat manufacturer's instructions, paying particular attention to the requirements regarding the location of the thermostat.

Make sure that if there is a heat anticipator setting on the thermostat, it is set at 0.6 amps (or in accordance with the amperage value noted on the heater wiring diagram).

Make thermostat connections at the terminal strip on the back of the heater. The strip has four terminals, R, G, W1, and W2; refer to the wiring diagram.

IMPORTANT: All units MUST be operated by a 24-volt thermostat. Never use a line voltage disconnect switch as a means of operating the heater. Operating Model Sizes 30-125 by means other than a 24-volt thermostat may result in the flame rollout switch tripping.

Unit Mounted Thermostat, Option CM3 - If the heater was ordered with Option CM3, a kit for mounting the thermostat on the rear of the heater is shipped separately. Follow the instructions in the option package to attach the bracket.

Select a snap-action thermostat when using the unit mounted thermostat bracket. Do not use a mercury switch thermostat because the vibration may cause excessive unit cycling. Be careful with the thermostat leads; shorting the thermostat wires to a metal surface will cause the transformer to fail.

8.0 Controls and Operation (cont'd)

8.1 Thermostat (cont'd)

Multiple Heater Control, Option CL31 and Option CL32 - If the heater was ordered with a multiple heater control option, one thermostat can be used to control up to six heaters. The option includes a 40VA transformer that replaces the standard transformer in the "controlling" unit and a relay assembly that attaches to the additional unit. Option CL31 provides for control of two heaters. If control of additional heaters is desired (up to six total), Option CL32 which is the relay assembly only must be added to each additional heater.

The option packages are shipped separately and include complete instructions on installation and wiring.

8.2 DDC Controls, Options D10 and D14

If the heater was ordered with Option D10 or D14, it is equipped with a Novar Minio control module. The Novar control with its accompanying relays and power transformer are mounted in the control compartment of the unit. See **FIGURE 15A.** This control offers a wide variety of input and output points that can be configured to meet a wide range of building management applications. User-selectable input types are Thermistor, 4-20 milliamp, 1-5 volts, or digital.

FIGURE 15A - DDC Control with Transformer and Relays is Mounted on a Specially Designed Bracket in the Control Compartment

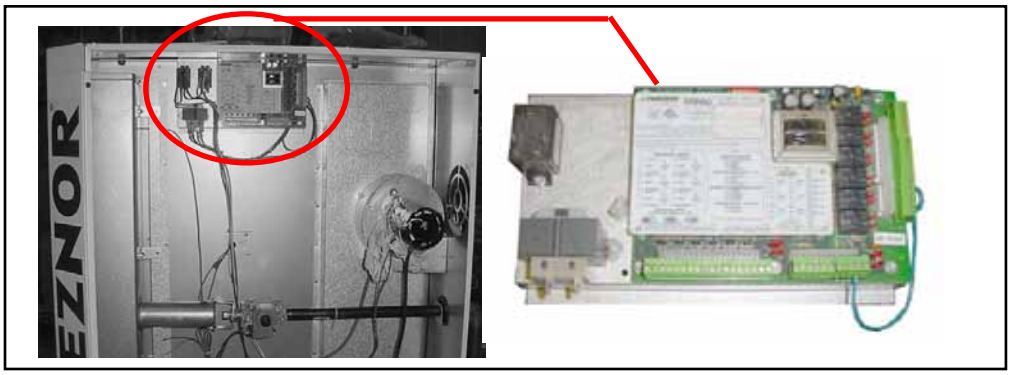

Control **Option D10** includes the controller and the sensor to be field mounted at the heater discharge. **Option D14** requires a field-supplied sensor that is compatible with the control. For regulatory compliance specifications, and safety precautions, review the control manufacturer's installation instructions in the owner's envelope.

The recommended location for mounting the sensor is on the side of a field-installed optional downturn nozzle. See **FIGURE 15B** for an illustration of the sensor included with Option D10 and dimensions for mounting it on the nozzle side.

FIGURE 15B - Recommended Location for Mounting the Sensor is on the Side Panel of a Discharge Nozzle (Option CD 2, 3, or 4)

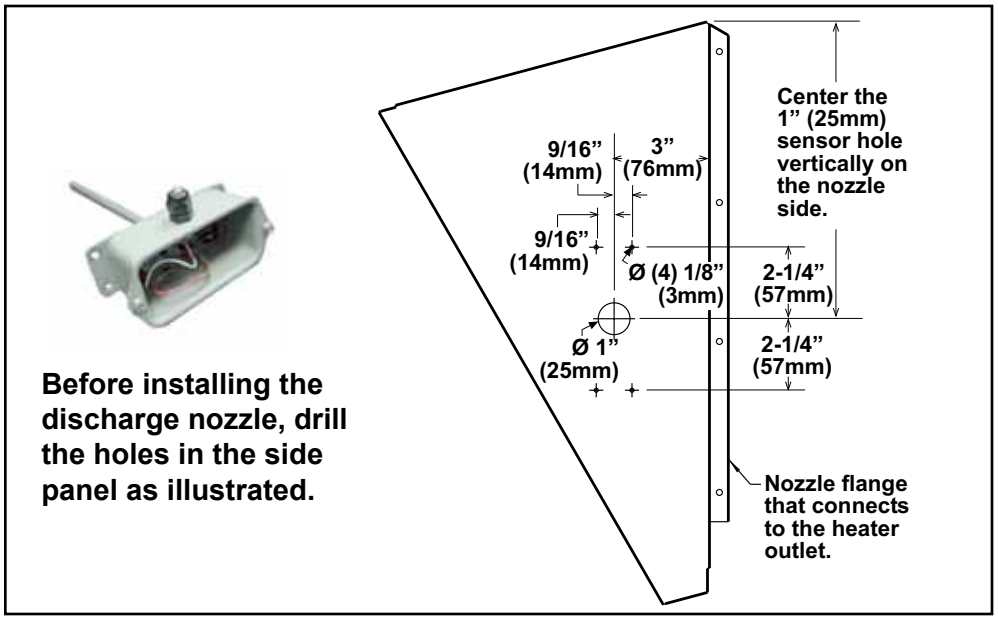

Mount the sensor on the nozzle side.

Drill a 7/8" hole in the cabinet top above the controller and install the bushing supplied with the unit for running the sensor wire. Wire the sensor to the controller as illustrated on the wiring diagram on the heater. Sensor wire is field-supplied.

8.3 Ignition System

This heater is equipped with a direct spark integrated control module (circuit board). The module monitors the safety devices and controls the operation of the fan and venter motors and the gas valve between heat cycles.

FIGURE 16 – DSI Integrated Control Module (circuit board)

LED lights are visible through a viewport on Model UDAS. Remove door panel to view LED lights on Model UDAP.

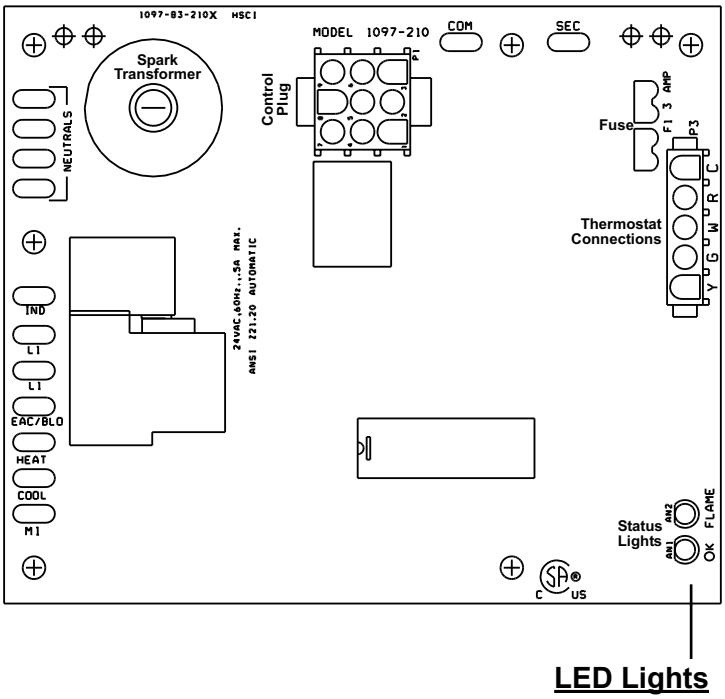

Control Status - Green LED Codes

Steady ON ..... Normal Operation, No call for heat

Fast Flash..... Normal Operation, Call for heat

1 Flash..... System Lockout, Failed to detect or sustain flame

2 Flashes..... Pressure Switch Did Not Close within 30 Seconds of Venter motor

3 Flashes..... High Limit or Flame Rollout Switch Open

4 Flashes..... Pressure switch is closed before venter motor is energized

Steady OFF ..... Blown Fuse, No Power, or Defective Board

Flame Status - Yellow LED Codes

Steady ON ..... Flame is sensed

Slow Flash..... Weak flame (current below 1.0 microamps ±50%)

Fast Flash..... Undesired Flame (valve open and no call for heat)

Normal Heat Cycle Operating Sequence

LED lights are visible through viewport on Model UDAS. Remove door panel to view LED lights on Model UDAP.

1) Call for Heat - The thermostat calls for heat by energizing the “W” terminal. The control checks to see that the limit switch is closed and the pressure switch is open. If the limit switch is open, the control responds as defined in the “Abnormal Heat Cycle, Limit Switch Operation”. If the pressure switch is closed, the control will do four flashes on the green LED and wait indefinitely for the pressure switch to open. If the pressure switch is open, the control proceeds to prepurge.

2) Prepurge - The control energizes the venter motor and waits for the pressure switch to close. If the pressure switch does not close within 30 seconds of the venter motor energizing, the control will do two flashes on the green LED. The control will leave the venter motor energized indefinitely as long as the call for heat remains and the pressure switch is open.

When the pressure switch is proven closed, the control begins the prepurge time. If flame is present any time while in prepurge, the prepurge time is restarted. If flame is present long enough to cause lockout, the control responds as defined in “Fault Modes, Undesired Flame”.

The control runs the venter motor for a 20 second prepurge time, then proceeds to the ignition trial period.

3) Ignition Trial Period - The control energizes the spark and main gas valve. The venter remains energized. If flame is sensed during the first 16 seconds, the spark is de-energized and the control proceeds to heat fan/blower on delay. If flame has not been sensed during the first 16 seconds, the control de-energizes the spark output and keeps the gas valve energized for an additional one second flame proving period. If flame is not present after the flame proving period, the control de-energizes the gas valve and proceeds with ignition re-tries as specified in “Abnormal Heat Cycle, Ignition Retry”. If flame is present, the control proceeds to the fan/blower on delay.

8.0 Controls and Operation (cont'd)

8.3 Ignition System (cont'd)

Normal Heat Cycle Operating Sequence (cont'd)

4) Fan/Blower On Delay - The control waits for 30 seconds from the time the gas valve opened and then energizes the fan/blower motor. The gas valve and venter motor remain energized. The control proceeds to steady heat mode.

5) Steady Heat - Control inputs are continuously monitored to ensure limit and pressure switches are closed, flame is established, and the thermostat call for heat remains. When the thermostat call for heat is removed, the control de-energizes the gas valve and begins post-purge and fan/blower off delay timing.

6) Post Purge - The venter motor output remains on for a 45-second post-purge period after the thermostat is satisfied.

7) Fan/Blower Off Delay - The fan/blower motor is de-energized after a fan/blower off delay (120 seconds). Timing begins when the thermostat is satisfied.

Abnormal Heat Cycle Functions

Interrupted Thermostat Call for Heat - If the thermostat demand for heat is removed before the flame is recognized, the control will run the venter motor for the post purge period and de-energize all outputs.

If the thermostat demand for heat is removed after successful ignition, the control will de-energize the gas valve, run the venter motor through post purge, and run the fan/blower motor on heat speed for the selected delay off time.

Ignition Retry - If flame is not established on the first trial for ignition period, the control de-energizes the gas valve and the venter motor remains energized for an inter-purge period of 10 seconds. The spark and gas valve are then re-energized, and the control initiates another trial for ignition.

If flame is not established on the second trial for ignition, the control de-energizes the gas valve, energizes the fan/blower motor on heat speed, and venter motor remains energized. The fan/blower motor is shut off after 120 seconds. When the fan/blower motor de-energizes, the spark and gas valve are re-energized and the control initiates another trial for ignition. (This fan delay is self-healing feature for an open auxiliary limit switch).

If flame is not established on the third trial for ignition period, the control de-energizes the gas valve, and the venter motor remains energized for an inter-purge period of 10 seconds. The control then re-energizes the gas valve and spark and initiates another trial for ignition.

If flame is not established on the fourth trial for ignition (initial try plus 3 re-tries), the control de-energizes the gas valve and goes into lockout. The control goes to one flash on the green LED to indicate ignition failure lockout.

Limit Switch Operation - The limit switch is ignored unless a call for heat is present (W energized). If the limit switch is open and a call for heat is present, the control de-energizes the gas valve and turns the fan/blower motor on heat speed and runs the venter motor.

When the switch re-closes or the call for heat is lost, the control runs the venter motor through post purge and runs the blower/fan motor through the selected fan off delay. The control will return to normal operation after fan off delay is completed.

Pressure Switch - If the pressure switch opens before the trial for ignition period, the venter motor will run through the pressure switch recognition delay (2 seconds), the gas valve will be de-energized, and the venter motor will run through the postpurge time. The control will re-start the heat cycle at the pressure switch proving state if the call for heat still exists.

Pressure switch opening for less than 2 seconds during the trial for ignition period shall not interrupt the heat cycle. (Gas valve will de-energize while the pressure switch is open.)

If the pressure switch opens after a successful ignition, the control will de-energize the gas valve. If flame is lost before the end of the 2 second pressure switch recognition delay, the control will respond to the loss of flame. If the pressure switch remains open for 2 seconds and the flame remains, the control de-energizes the gas valve, the venter motor runs through post-purge, and the fan/blower motor runs on heat speed

through the selected fan off delay. When the fan off delay is over, the fan/blower motor is de-energized, and a heat cycle is begun if the call for heat still exists.

Continuous Fan Operation

When the thermostat calls for continuous fan (G) without a call for heat, the fan motor is energized after a .25 second delay. NOTE: This brief on delay is to allow the “G” terminal to energize slightly before “Y” and an external changeover relay to switch from “G” to “W” without causing momentary glitches in the fan/blower output. The fan remains energized as long as the call for fan remains without a call for heat.

If a call for heat (W) occurs during continuous fan, the fan/blower will de-energize.

A call for fan is ignored while in lockout.

Fault Modes

Undesired Flame - If flame is sensed longer than 20 seconds while the gas valve is de-energized, the control shall energize the venter motor and fan/blower motor on heat speed. When flame is no longer sensed, the venter motor will run through postpurge, and the fan/blower motor will run through the selected heat fan off delay time. The control will do a soft lockout, but will still respond to open limit and flame. The FLAME (yellow) LED shall flash rapidly when lockout is due to undesired flame.

Gas Valve Relay Fault - If the control senses the gas valve as energized for more than one second when the control is not attempting to energize the gas valve, or the gas valve is sensed as not energized when it is supposed to be energized, then the control will lockout with green LED off. The control assumes either the contacts of the relay driving the gas valve have welded shut, or the sensing circuit has failed. The venter motor is forced off to open the pressure switch to stop gas flow unless flame is present.

If the gas valve was sensed as closed when it should be open, and has not de-energized after the venter motor was shutoff for 15 seconds, then the venter motor is re-energized to vent the unburned gas.

Lockout

Soft Lockout - The control shall not initiate a call for heat or call for continuous fan while in lockout. The control will still respond to an open limit and undesired flame. Lockout shall automatically reset after one hour. Lockout may be manually reset by removing power from the control for more than one second or removing the thermostat call for heat for more than one and less than 20 seconds.

Hard Lockout - If the control detects a fault on the control board, the status LED will be de-energized, and the control will lockout as long as the fault remains. A hard lockout will automatically reset if the hardware fault clears.

Power Interruption - During a momentary power interruption or at voltage levels below the minimum operating voltage (line voltage or low voltage) the system will self-recover without lockout when voltage returns to the operating range.

Power interruptions of less than 80mS shall not cause the control to change operating states. Power interruptions greater than 80mS may cause the control to interrupt the current operating cycle and re-start.

9.0 Commissioning and Startup

9.1 Check the installation prior to startup:

- ☐ Check to be sure that all screws used to hold shipping brackets were re-installed in the heater cabinet.
- ☐ Check suspension. Unit must be secure and level.
- ☐ Check clearances from combustibles. Requirements are in Paragraph 4.1.
- ☐ Check vent system to be sure that it is installed according to the instructions in the appropriate Vent Installation Manual as listed in Paragraph 2.2.
- ☐ Check piping for leaks and proper gas line pressure. Bleed gas lines of trapped air. See Paragraph 6.1.
- ☐ Check electrical wiring. Be sure all wire gauges are as recommended. A service disconnect switch should be used. Verify that fusing or circuit breakers are adequate for the load use.
- ☐ Check polarity. Verify that line voltage exists between the black “L1” and earth ground.
- ☐ If installed in California, verify that California Warning Label is displayed.

9.2 Heater Startup:

WARNINGS: For your safety, read before operating. If you do not follow these instructions exactly, a fire or explosion may result causing property damage, personal injury, or loss of life.

- **This appliance does not have a pilot. It is equipped with an ignition device which automatically lights the burner. Do not try to light the burner by hand.**
- **Before operating, smell all around the appliance area for gas. Be sure to smell next to the floor because some gas is heavier than air and will settle on the floor.**

WHAT TO DO IF YOU SMELL GAS

- **Do not try to light any appliance.**
- **Do not touch any electrical switch; do not use any phone in your building.**
- **Leave the building immediately.**
- **Immediately call your gas supplier from a phone remote from the building. Follow the gas supplier’s instructions.**
- **If you cannot reach your gas supplier, call your fire department.**

- **Use only your hand to turn the gas control ON/OFF knob on the gas valve. Never use tools. If the valve ON/OFF knob will not turn by hand, do not try to repair it. Call a qualified service technician. Force or attempted repair may result in a fire or explosion.**
- **Should overheating occur, or the gas supply control system fail to shut off the flow of gas, turn off the manual gas valve to the appliance before shutting off the electrical supply.**
- **Do not use this appliance if any part has been under water. Immediately call a qualified service technician to inspect the appliance and to replace any part of the control system and any gas control which has been under water.**

FIGURE 17 - Gas Valve ON/OFF Control Knob

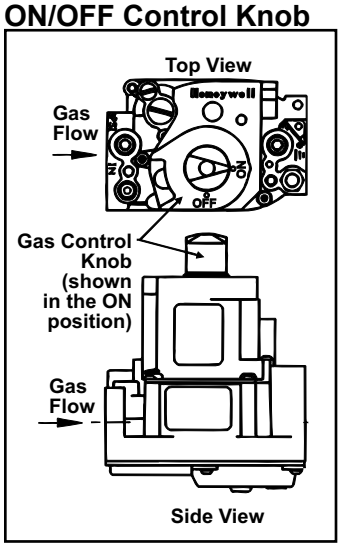

Operating Sequence

1. Set thermostat at lowest setting.
2. Turn off all electric power to the appliance.
3. This appliance is equipped with an ignition device which automatically lights the burner. Do not try to light the burner by hand. Open the access door and locate the gas control (ON/OFF) knob on the gas valve. (See **FIGURE 17**.)
4. Turn the gas control knob clockwise to “OFF”.
5. Wait five (5) minutes to clear out any gas. Then smell for gas, including near the floor. **If you smell gas, STOP!** and follow the steps in the **WARNINGS** printed above or on the Operating Label on the heater. If you do not smell gas, proceed to the next step.
6. Turn the gas control knob counterclockwise to “ON”.
7. Close the access door.
8. Turn on the electric power to the heater.
9. Set the thermostat to the desired setting.

NOTE: If the appliance does not operate, follow the instructions “To Turn Off Gas to Appliance” printed below (and on the Operating Label on the heater) and call your service technician.

10. Thermostat calls for heat, energizing the venter motor.
11. Venter pressure switch closes, firing the unit.
12. Burner flame is sensed and in 30 seconds after the gas valve is energized, the fan motor is energized.
13. If the flame is extinguished during the main burner operation, the integrated control system closes the main valve and must be reset by interrupting power to the control circuit. (See lighting instructions on the heater.).

TO TURN OFF GAS TO THE APPLIANCE

1) Set thermostat to lowest setting
2) If service is to be performed, turn off all electric power to the appliance.
3) Open the access door.
4) Turn the gas control knob clockwise to “OFF”. Do not force.
5) Close the access door.

9.3 Check installation after startup:

☐ Vent System Testing Procedure

The steps below shall be followed with each heater or utility heater connected to the venting system placed in operation while any other appliance(s) connected to the venting system(s) is not in operation.

1. Seal unused openings(s) in the venting system.
2. Inspect the venting system for proper size and horizontal pitch as required in the National Flue Gas Code, ANSI Z223.1/NFPA 54, or the Natural Gas and Propane Installation Code, CSA B149.1, and the venting manual instructions. Verify that there is no blockage or restriction, leakage, corrosion, and/or other deficiencies that could cause an unsafe condition.
3. In so far as is practical, close all doors, windows, other open spaces within the building, and all doors between the space in which the appliance(s) connected to the venting system is located. Turn on clothes dryers and any exhaust fans (such as range hoods and bathroom exhausts) so they operate at maximum speed. Do not operate a summer exhaust fan. Close fireplace dampers.
4. Following the lighting instructions, place the utility heater being inspected in operation. Adjust the thermostat so that the utility heater will operate continuously.
5. After it has been determined that each utility heater connected to the venting system properly vents when tested as outlined above, return doors, windows, exhaust fans, fireplace dampers, and any other gas-burning appliance to their previous condition of use.
6. If improper venting is observed during any of the above tests, the venting system must be corrected.

9.0 Commissioning and Startup (cont'd)

9.3 Check installation after startup (cont'd)

- ☐ With the unit in operation, measure valve outlet gas pressure. If operated at high altitude, adjust outlet gas pressure for altitude.
  See information and instructions in Paragraph 6.1.
- ☐ Turn the unit off and on, pausing two minutes between each cycle. Observe for smooth ignition.
- ☐ Place the "Literature Bag" containing the Limited Warranty, this booklet, the venting manual, and any control or optional information in an accessible location near the heater.

DANGER: The gas burner in this gas-fired equipment is designed and equipped to provide safe controlled complete combustion. However, if the installation does not permit the burner to receive the proper supply of combustion air, complete combustion may not occur. The result is incomplete combustion which produces carbon monoxide, a poisonous gas that can cause death. Safe operation of indirect-fired gas burning equipment requires a properly operating vent system that vents all flue products to the outside atmosphere. FAILURE TO PROVIDE PROPER VENTING WILL RESULT IN A HEALTH HAZARD WHICH COULD CAUSE SERIOUS PERSONAL INJURY OR DEATH.

Always comply with the combustion air requirements in the installation codes and in Paragraph 6.2. Combustion air at the burner should be regulated only by manufacturer-provided equipment. NEVER RESTRICT OR OTHERWISE ALTER THE SUPPLY OF COMBUSTION AIR TO ANY HEATER. Model UDAP units installed in a confined space must be supplied with air for combustion as required by Code and in Paragraph 6.2 of this heater installation manual. MAINTAIN THE VENT OR VENT/COMBUSTION AIR SYSTEM IN STRUCTURALLY SOUND AND PROPER OPERATING CONDITION.

10.0 Maintenance and Service

WARNING: If you turn off the power supply, turn off the gas. See Hazard Levels, page 2.

The material contained in the MAINTENANCE AND SERVICE Section of this manual is designed to aid a qualified service person in maintaining and servicing this equipment. This heater will operate with a minimum of maintenance. To ensure long life and satisfactory performance, a heater that is operated under normal conditions should be inspected and cleaned at the start of each heating season. If the heater is operating in an area where an unusual amount of dust or soot or other impurities are present in the air, more frequent maintenance is recommended.
When any service is completed, be careful to reassemble correctly to ensure that no unsafe conditions are created. When re-lighting, always follow the lighting instructions on the heater.

This heater is equipped with a TCORE^{2}® burner.
Inspect the burner/control compartment annually to determine if cleaning is necessary.

10.1 Maintenance Schedule

Maintenance Schedule - The following procedures should be carried out at least annually (See **FIGURE 18** and Paragraphs 10.2.1 - 10.2.14.):

- Clean all dirt, lint, and grease from the combustion air opening (UDAP) and venter assembly.
- Clean all dirt, lint, and grease from the fan blade, fan guard, and motor.
- Check the heat exchanger both internally and externally.
- Check the burner for scale, dust, or lint accumulation. Clean if needed.
- Check gas valve to ensure that gas flow is being shutoff completely.
- Check the vent or vent/combustion air system for soundness. Clean openings. Replace any parts that do not appear sound.
- Check the wiring for any damaged wire. Replace damaged wiring. (See Paragraph 7 for replacement wiring requirements.)

NOTE: If replacement parts are required, use only factory-authorized parts.

FIGURE 18 - Location of Controls

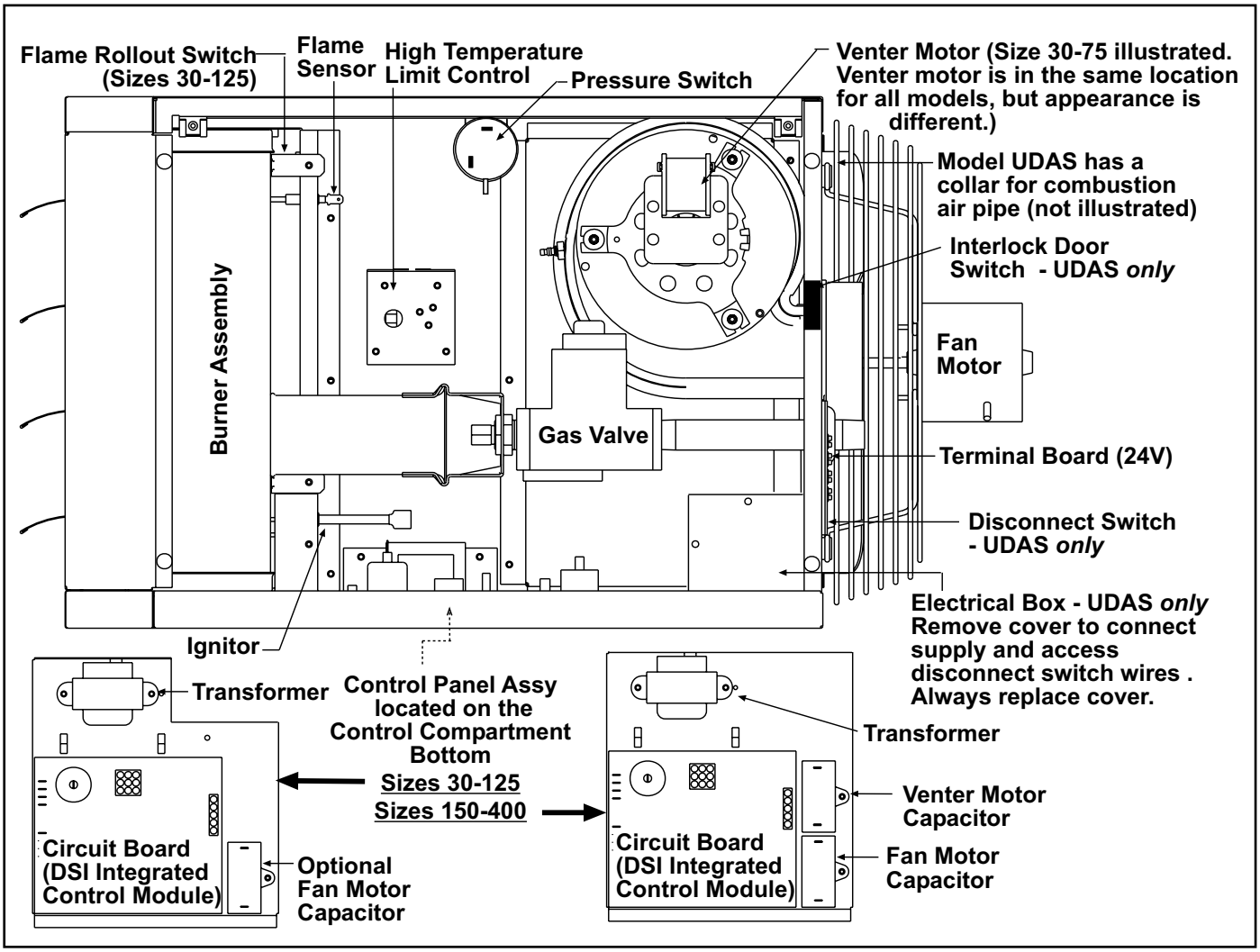

10.2 Maintenance Procedures

10.2.1 Heat Exchanger Maintenance

This heater has a TCORE^{2}® heat exchanger.

Remove any external dirt or dust accumulation. Visually check the heat exchanger for cracks and holes. If a crack or hole is observed, replace the heat exchanger.

NOTE: Inspection of the lower portion of the heat exchanger is done with the burner removed. See the Burner Service section below for information on inspecting the lower portion of the heat exchanger.

10.2.2 Burner Maintenance

If there is an accumulation of dirt, dust, and/or lint, clean the compartment and follow the instructions below to remove and clean the burner.

CAUTION: Use of eye protection is recommended.

Burner Removal Instructions (Refer to FIGURE 19.)

1. Outside the cabinet, shut the gas supply off at the manual valve ahead of the outside of the cabinet.
2. Turn off electric supply.
3. Disconnect the gas supply at the union
4. Remove the access panel.
5. **Disconnect and Move the Gas Train** - At the gas valve, mark and disconnect the wires. Carefully remove the burner orifice and orifice adapter locking nut. Slide the orifice adapter out through the bracket on the burner pushing the gas train to the right. This will move the gas train out of the way.
6. **Move the Control Assembly** - Remove the two screws holding the control assembly bracket. Being careful not to disconnect any wires, slide the control assembly to the right.
7. **Remove Secondary Air Baffles (Sizes 60-400 only)** - Vertical along the right side of the burner, locate the flat plate(s) identified as the secondary air baffle(s). The quantity of baffles could be one to four depending on heater size. Each baffle is held in place by one screw. **For re-assembly, on the secondary air shield, mark the location (top and bottom) of each baffle.** Remove all baffles.
8. **Remove Burner Assembly**
   a) Locate the burner body supports. Depending on the size, the burner will have two or more supports. At each support, remove the one screw that attaches it to the secondary air shield
   b) Holding the venturi tube, slide the entire burner assembly slightly to the right to disengage the burner from the supports on the left. Then rotate the open end of the venturi tube inward toward the heater. Carefully pull the burner assembly out of the cabinet.

With the burner assembly removed, shine a flashlight on the burner ribbons. Look for carbon buildup, scale, dust, lint, and/or anything that might restrict flow through the

FIGURE 19 - Burner Removal (UDAP illustrated; same process for both UDAP and UDAS)

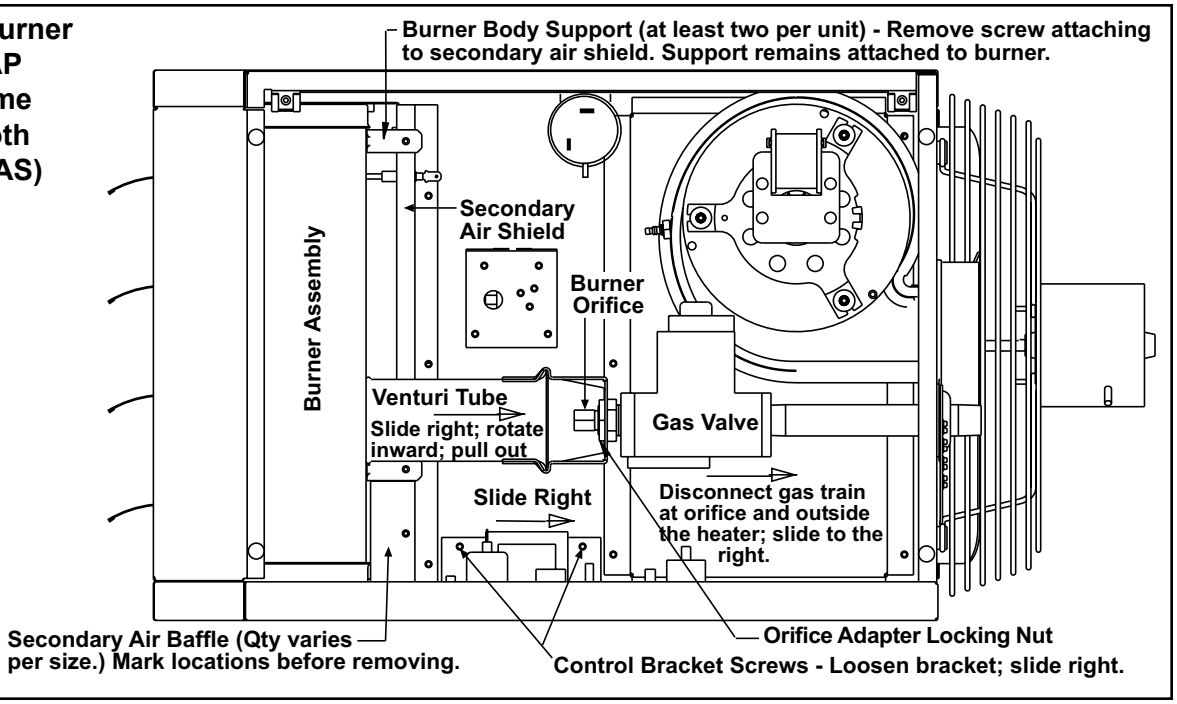

Inspect and Clean the Burner

spaces between the burner ribbons. Holding the burner assembly so that any foreign material will fall away from the burner, use a stiff bristle brush to loosen and remove any foreign material(s). If the burner is excessively dirty, remove one of the burner end caps. Remove the four screws that hold the end cap to the burner housing. Lightly tap the end cap to remove it.

Clean all foreign material from the burner and venturi. After the burner is thoroughly clean, replace the end cap making certain that it is tight against the burner housing. **NOTE:** If any of the burner components are damaged or deteriorated, replace the burner assembly.

Inspect the Lower Portion of the Heat Exchanger (with burner assembly removed)

At the burner flame entrance of each tube, shine a bright light into each heat exchanger section. With the light shining into the heat exchanger, observe the outside for visible light. Repeat this procedure with each heat exchanger section. If any light is observed, replace the heat exchanger.

Re-Install the Burner

Instructions to Re-Install the Burner (Refer to FIGURE 19)

1. **Attach the Burner Assembly -** Holding the venturi tube, slide the entire burner assembly into position. Align the supports on the left side with the slots in the burner shield; sliding the supports into the slots. On the right, re-attach each burner body support to the secondary air shield.
2. **Attach the Secondary Air Baffles (Sizes 60-400 only)** - Re-attach the secondary air baffles as marked. Baffles may be different sizes and each **must** be attached in the correct location.
3. **Attach the Control Assembly** - Carefully slide the control assembly into position. Re-attach with the same screws. Check to be sure all wire connections are secure.
4. **Attach the Gas Train** - Slide the gas train so that the orifice adapter is through the bracket. Fasten the gas train to the bracket with the locking nut. Install the gas orifice. Re-connect the wires to the gas valve.
5. Close the access panel.
6. Reconnect the gas supply at the union outside of the cabinet. Leak test the connection with leak detecting solution.
7. Turn on the electric and the gas. Check for proper operation.

10.2.3 Burner Orifice

Burner orifice usually only needs to be replaced when installing a gas conversion kit. If ordering a replacement orifice only, give BTUH content and specific gravity of gas, as well as the model and serial number of the unit. When removing or replacing the burner orifice, be careful not to damage the venturi tube and/or the bracket.

10.2.4 Ignition System

DSI Integrated Control Module (circuit board) - See **FIGURE 20**. The module monitors the operation of the heater including ignition. The only replaceable component is the 3 amp Type ATC or ATO fuse. If the fuse is blown, the problem is most likely an external overload. Correct the problem and replace the fuse.

FIGURE 20 - DSI Integrated Control Module (Circuit Board)

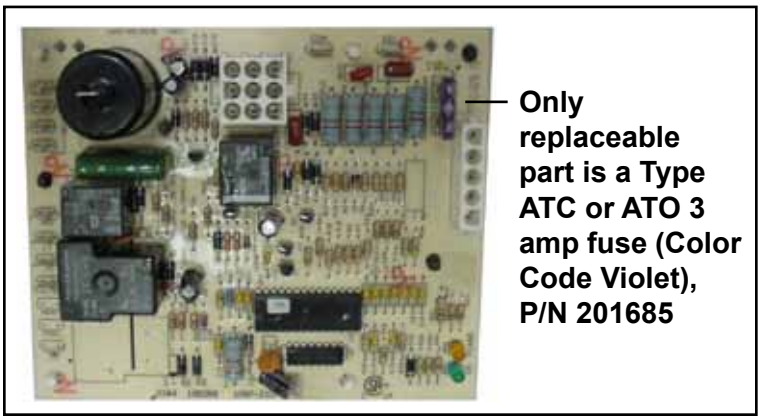

10.0 Maintenance and Service (cont'd)

10.2 Maintenance Procedures (cont'd)

10.2.4 Ignition System (cont'd)

Do not attempt to disassemble the control module. However, each heating season check the lead wires for insulation deterioration and good connections.

Proper operation of the direct spark ignition system requires a minimum flame signal of 1.0 microamps as measured by a microampmeter.

For further information and check out procedure on the direct spark ignition system, refer to Paragraph 8.3 and the Troubleshooting Flow Chart in Paragraph 10.3.

Ignitor

Ignitor - Refer to **FIGURE 18** and locate the ignitor. Disconnect the wire; remove the screw and the ignitor. Clean the ignitor assembly with an emery cloth.

Spark gap must be maintained to 1/8". See **FIGURE 21**.

IMPORTANT: When re-assembling, the brown ground wire must remain attached to the ignitor.

FIGURE 21 - Ignitor showing required Spark Gap measurement

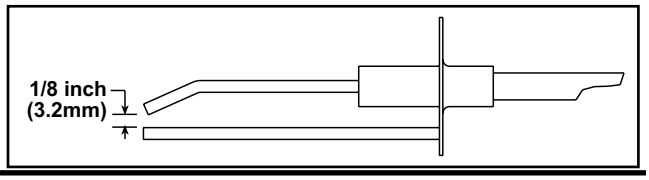

CAUTION: Due to high voltage on the spark wire and electrode, do not touch when energized. See Hazard Levels, page 2.

Flame Sensor

Flame Sensor - Refer to **FIGURE 18** and locate the flame sensor. Disconnect the wire; remove the screw and the flame sensor. Clean with an emery cloth.

10.2.5 Fan Motor, Fan Blades, and Guard

Remove dirt and grease from the motor, the fan guard, and blades. Use care when cleaning the fan blades to prevent causing misalignment or imbalance. Check that the hub of the fan blades is secure to the shaft.

Follow these instructions for replacement of the fan guard, fan motor and/or fan blades.

FIGURE 22 - Fan Blade Position on the Shaft

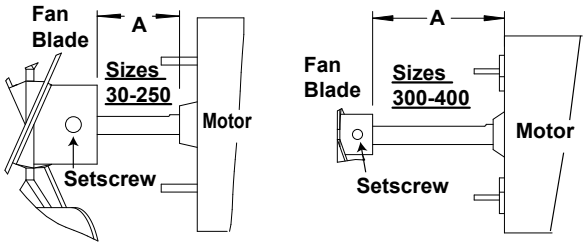

UDAP & UDAS	Size	30	45	UDAP-45LN (with AL2B)	60	75	100	125	150	175	200	225, 250, 300	350	400
A	inches	1	9/16	3/4	1-1/2	2-1/8	2-3/8	2-5/16	2-3/8	2-1/8	1-5/8	2	1-7/8	1-3/8
	mm	25	14	19	38	54	60	59	60	54	41	51	48	35
Setscrew torque	in/lbs ±10	80					120		130					

1. If the heater is installed, turn off the gas and disconnect the electric power.
2. Open the access door and disconnect the fan motor wires, capacitor wires at the capacitor, and ground screw.
3. Remove the assembled parts (the fan guard, the motor and the fan blade).
4. Disassemble and replace whatever parts are needed and reassemble using whatever part(s) are being replaced and the original parts.

   Be sure the fan blade is in the proper position on the shaft; refer to the illustration and table in **FIGURE 22.**

   Position the assembly on the heater. Attach the fan guard.

   Rotate the fan blade to check for adequate clearance. If adjustment is required, loosen the mounting screws, re-position the fan guard, and tighten the screws. Rotate the fan blade and re-check for adequate clearance. Repeat this procedure until the assembly is positioned properly.

5. Reconnect the fan motor wires according to the wiring diagram and close the access panel.
6. Restore power to the heater and turn on the gas. Light, following the instructions on the lighting instruction plate. Check for proper operation.

10.2.6 Venter Motor and Wheel

Replacement Instructions

Remove dirt and grease from the motor casing, the venter housing, and the venter wheel. Venter motor bearings are permanently lubricated. Follow these instructions for replacement of the venter motor and wheel assembly. Keep all hardware removed to be used in re-assembling and installing the replacement parts.

1. Turn off the gas and disconnect the electric power.

2. Open the burner/control compartment access panel.

3. Disconnect the three venter motor wires at the DSI control, capacitor wires at the capacitor (if applicable), and ground screw (located on the control panel).

4. Sizes 30 and 45 - Disconnect the gas train and move it out of the way. Disconnect the gas supply at the union outside of the cabinet. At the gas valve, mark and disconnect the wires. Carefully remove the burner orifice and orifice adapter locking nut. Slide the orifice adapter out through the bracket on the burner pushing the gas train to the right. This will move the gas train out of the way.

5. Holding the venter motor, remove the three or four screws that attach the venter motor mounting plate to the venter housing. Remove the motor and wheel assembly from the heater.

6. Re-assemble with the replacement venter motor and wheel assembly. See **FIGURE 23**.

FIGURE 23 - Venter Wheel Position on Shaft

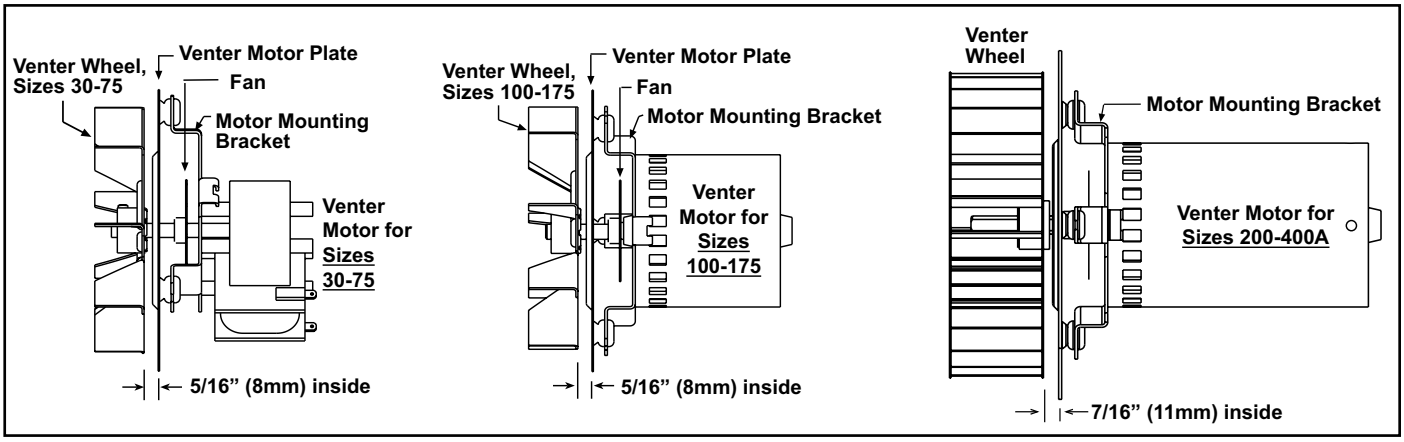

7. Follow the wiring diagram to connect the venter wires.

8. Sizes 30 and 45 - Reconnect the gas supply at the union outside of the cabinet. Leak test the connection with leak detecting solution.

9. Replace the access panel. Restore power to the heater and turn on the gas. Light, following the instructions on the lighting instruction plate. Check for proper operation.

10.2.7 Operating Gas Valve

Carefully remove external dirt accumulation and check wiring connections.

WARNING: The operating valve is the prime safety shutoff. All gas supply lines must be free of dirt or scale before connecting to the unit to ensure positive closure. See Hazard Levels, page 2.

The combination gas valve must be checked annually to ensure that the valve is shutting off gas flow completely.

Instructions:

1) Locate the 1/8" NPT pressure tap on the combination valve. (See **FIGURE 24**, page 34.

10.2.7 Operating Gas Valve (cont'd)

FIGURE 24 - Pressure Tap for Checking Gas Flow Shutoff

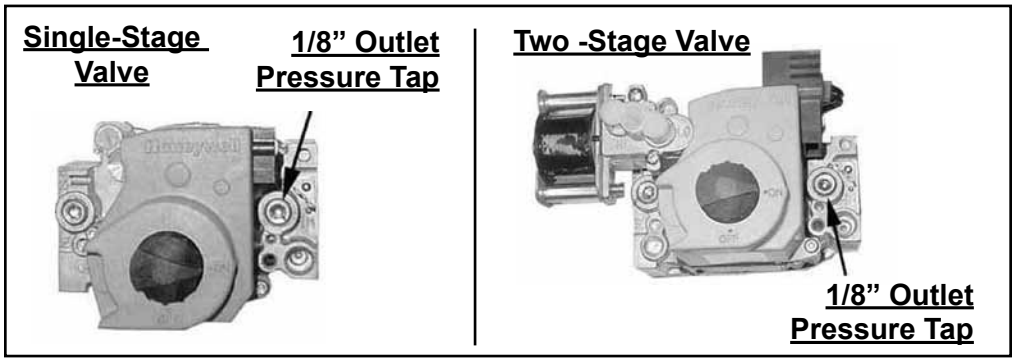

NOTE: Operational pressure settings and instructions for checking pressure settings are in Paragraph 6.1.

2) With the manual valve turned off to prevent flow to the gas valve, connect a manometer to the 1/8" outlet pressure tap in the valve. NOTE: A manometer (fluid-filled gauge) is recommended.
3) Turn the manual valve to the ON position and the heater OFF. Use your finger to fully block the main burner orifice for several seconds. Observe the manometer with the orifice blocked, and if any pressure is indicated, the gas valve is leaking. **A leaking gas valve must be replaced before the heater is put back in operation.**

10.2.8 Combustion Air Pressure Switch

See **FIGURE 18**, page 30, for location. (NOTE: Depending on date of manufacture and size, pressure switch may not be in the location indicated. Check the control bracket on the bottom of the compartment or further down on the compartment wall.) If it is determined that the pressure switch needs replacing, use only the factory-authorized replacement part that is designed for the model and size of heater being serviced. **NOTE**: A unit operating above 6000 ft (1830M) elevation requires a high altitude pressure switch. See Paragraph 3.2.

10.2.9 Limit Control

If it is determined that the limit control needs replacing, use only a factory-authorized replacement part that is designed for the size of heater.

For approximate limit location, see **FIGURE 18**, page 30.

10.2.10 Flame Rollout Switch - Sizes 30-125 *only*

For location, see FIGURE 18, page 30.

The cause of a flame rollout switch activating must be determined. Activation of the manually reset flame rollout switch could be caused by one or more of the following:

- Restricted or plugged heat exchanger
- Too much building exhaust
- Manifold gas pressure too high
- Restricted combustion air inlet or exhaust outlet in combination with a defective pressure switch
- Electrical power interruption during operation
- Unit being operated with a line voltage disconnect (a 24-volt thermostat is required)

If a flame rollout switch trips, inspect the burner/control compartment for signs of excessive heat and burned wiring.

If the compartment appears normal, reset by depressing the red button on the switch. 15 to 20 minutes are required for the switch to cool sufficiently for resetting. A distinct click will be felt when the switch resets. Operate the furnace. If the flame rollout switch trips again, determine and correct the cause before resetting the switch.

If there is damage to the control compartment, repairs must be made before resetting the switch.

If it is determined that the flame rollout switch needs replacing, use only the factory-authorized replacement part that is designed for that size of heater.

The disconnect switch is located in the sealed electrical box inside the control compartment with the toggle on the rear of the heater.

10.2.11. Door Switch - UDAS *only*

If it is determined that the door switch needs replacing, use only a factory-authorized replacement part that is designed for the heater.

For approximate switch location, see **FIGURE 18**, page 30.

10.2.12 Transformer

See **FIGURE 18**, page 30, for location. Use a voltmeter to verify that there are 24 volts output from the transformer. If the transformer is not functioning, it must be replaced. Use a replacement transformer identical to the factory-installed model.

10.2.13 Disconnect Switch - UDAS *only*

If it is determined that the disconnect switch needs replacing, use only the factory-authorized replacement part that is designed for the heater. Always replace electrical box cover.

10.2.14 Vent or Vent/ Combustion Air System

Check the complete system at least once a year. Inspection should include all joints, seams, concentric adapter box (UDAS), inlet air guard or inlet air cap (UDAS), and the vent terminal cap. Clean openings. Replace any defective parts.

10.3 Troubleshooting

Check the Lights on the DSI Integrated Control Module (Circuit Board)

IMPORTANT: When using a multimeter to troubleshoot the 24 volt circuit, place the meter's test leads into the 5 or 9 pin connectors located on the ignition control. Do not remove connectors or terminals from the electrical components. Doing so can result in misinterpreted readings due to the ignition control board's fault mode monitoring circuits.

The integrated circuit board monitors the operation of the heater and includes two LED signal lights that indicate normal operation and various abnormal conditions. If the heater fails to operate properly, check this signal to determine the cause and/or to eliminate certain causes. LED is visible through viewport on Model UDAS. Remove access panel on Model UDAP. See operating sequence in Paragraph 9.

Do not attempt to repair the DSI integrated control module (circuit board); the only field replaceable component is the fuse.

Control Status - Green LED Codes

Steady ON Normal Operation, No call for heat
Fast Flash . Normal Operation, Call for heat
1 Flash ..... System Lockout, Failed to detect or sustain flame
2 Flashes .. Pressure Switch Did Not Close within 30 Seconds of Venter Motor
3 Flashes .. High Limit or Flame Rollout Switch Open
4 Flashes .... Pressure Switch is Closed Before Venter Motor is Energized
Steady OFF Blown fuse, No Power, or Defective Board

Flame Status - Yellow LED Codes

Steady ON .. Flame is sensed
Slow Flash .. Weak flame (current below 1.0 microamps ± 50%)
Fast Flash ... Undesired Flame (valve open and no call for heat)

DSI Integrated Control Module (Circuit Board) Trial Troubleshooting Flowchart

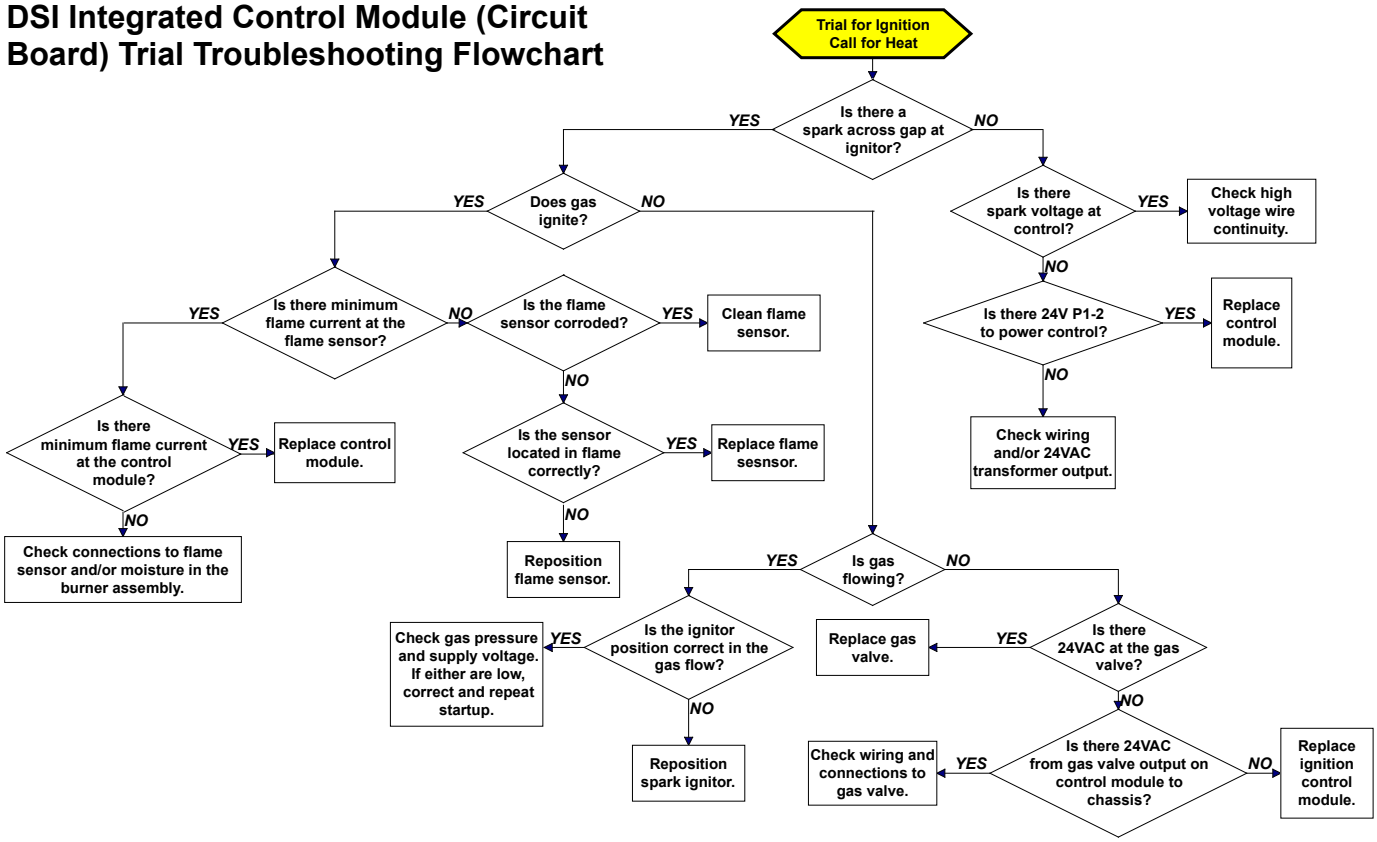

10.3 Troubleshooting (cont'd)

General Troubleshooting

PROBLEM	PROBABLE CAUSE	REMEDY
Venter motor will not start	**1.** No power to unit.	**1.** Turn on power, check supply fuses or circuit breaker.
	2. No 24 volt power to integrated circuit board.	**2.** Turn up thermostat; check control transformer output.
	3. Integrated circuit board fuse blown.	**3.** Correct cause. Replace fuse (type ATC or ATO, 32VDC, 3A).
	4. No power to venter motor.	**4.** Tighten connections at circuit board and/or motor terminals.
	5. Integrated circuit board defective.	**5.** Replace integrated circuit board.
	6. Defective venter motor.	**6.** Replace venter motor. See Paragraph 29.
Burner will not light	**1.** Manual valve not open.	**1.** Open manual valve.
	2. Air in the gas line.	**2.** Bleed gas line (initial startup only).
	3. Gas pressure too high or too low.	**3.** Supply pressure should be 5" - 14" w.c. for natural gas or 11" - 14" w.c. for propane.
	4. No Spark: a) Loose wire connections b) Transformer failure.: c) Incorrect spark gap. d) Spark cable shorted to ground. e) Spark electrode shorted to ground. f) Burner not grounded. g) Circuit board not grounded. h) Unit not properly grounded. i) Integrated circuit board fuse blown. j) Faulty integrated circuit board.	**4.** a) Be certain all wire connections are solid. b) Be sure 24 volts is available. c) Maintain spark gap at 1/8". d) Replace worn or grounded spark cable. e) Replace if ceramic spark electrode is cracked or grounded. f) Make certain integrated circuit board is grounded to ignitor. g) Make certain integrated circuit board is grounded to furnace chassis. h) Make certain unit is properly field grounded to earth ground and properly phased (L1 to hot lead L2 to neutral). i) Correct cause. Replace fuse (type ATC or ATO, 32VDC, 3A). j) If 24 volt is available to the integrated circuit board and all other causes have been eliminated, replace board.
	5. Lockout device interrupting control circuit by above causes.	**5.** Reset lockout by interrupting control at the thermostat or main power.
	6. Combustion air proving switch not closing.	**6.** a) Make sure unit is **properly vented.** b) Remove obstructions from vent. c) Replace faulty tubing to pressure switch.
	7. Faulty combustion air proving switch.	**7.** Replace combustion air proving switch.
	8. Main valve not operating. a) Defective valve. b) Loose wire connections	**8.** a) If 24 volt is measured at the valve connections and valve remains closed, replace valve. b) Check and tighten all wiring connections.
	9. Integrated circuit board does not power main valve. a) Loose wire connections. b) Flame sensor grounded. c) Incorrect gas pressure. d) Cracked ceramic at sensor.	**9.** a) Check and tighten all wiring connections. b) Be certain flame sensor lead is not grounded or insulation or ceramic is not cracked. Replace as required. c) Supply pressure should be 5" - 14" w.c. for natural gas or 11" - 14" w.c. for propane. d) Replace sensor.
Burner cycle on and off	**1.** Gas pressure too high or too low.	**1.** Supply pressure should be 5" - 14" w.c. for natural gas or 11" - 14" w.c. for propane.
	2. Burner not grounded	**2.** Make certain integrated circuit board is grounded to ignitor.
	3. Circuit board not grounded.	**3.** Make certain integrated circuit board is grounded to furnace chassis.
	4. Faulty integrated circuit board	**4.** If 24 volt is available to the integrated circuit board and all other causes have been eliminated, replace board.
	5. Combustion air proving switch not closing.	**5.** a) Make sure unit is properly vented. b) Remove obstructions from vent. c) Replace faulty tubing to pressure switch.
	6. Faulty combustion air proving switch.	**6.** Replace combustion air proving switch.
	7. Flame sensor grounded.	**7.** Be certain flame sensor lead is not grounded or insulation or ceramic is not cracked. Replace as required.
	8. Cracked ceramic at sensor.	**8.** Replace sensor.
	9. Incorrect polarity.	**9.** Reverse line volt leads to integrated circuit board.
	10. Pin terminal loose on 9 pin plug.	**10.** Replace wire harness.

No heat (Heater Operating)	**1.** Incorrect valve outlet pressure or orifice.	**1.** Check valve outlet pressure. See Rating plate for manifold pressure.
	2. Cycling on limit control.	**2.** Check air throughput.
	3. Improper thermostat location or adjustment.	**3.** See thermostat manufacturer's instructions.
Fan or venter motor will not run	**1.** Circuit open.	**1.** Check wiring and connections.
	2. Defective integrated circuit board.	**2.** Replace board.
	3. Defective motor or starter.	**3.** Replace motor or starter.
Fan or venter motor turns on and off while burner is operating	**1.** Motor overload device cycling on and off.	**1.** Check motor load against motor rating plate. Replace motor if needed.
Fan or venter motor cuts out on overload	**1.** Low or high voltage supply.	**1.** Correct electric supply.
	2. Defective motor.	**2.** Replace motor.
	3. Poor airflow.	**3.** Clean motor, fan, fan guard, filter, and coils

APPENDIX

TECHNICAL DATA - Sizes 30 - 125 (Data applies to both Models UDAP and UDAS unless noted otherwise.)

Size		**30**	**45**	**60**	**75**	**100**	**125**
Input Heating Capacity	BTUH	30,000	45,000	60,000	75,000	105,000	120,000
	kw	8.8	13.2	17.6	22.0	30.8	35.2
Thermal Efficiency (%)		82	83	83	83	83	83
Output Heating Capacity [A]	BTUH	24,600	37,350	49,800	62,250	87,150	99,600
	kw	7.2	11.0	14.6	18.3	25.6	29.2
Gas Connection (inches) [B]	Natural	1/2	1/2	1/2	1/2	1/2	1/2
	Propane	1/2	1/2	1/2	1/2	1/2	1/2
Vent Connection [C] (inches diameter)		4	4	4	4	4	4
Combustion Air Inlet [C] (inches diameter) - **UDAS only**		4	4	4	4	4	4
Control Amps (24 volt)		1.0	1.0	1.0	1.0	1.0	1.0
Full Load Amps (115 volt)		1.9	2.4	2.4	3.3	3.9	5.1
Maximum Over Current Protection [D E]	Standard 115V	15	15	15	15	15	15
	Optional 208V or 230V	15	15	15	15	15	15
Normal Power Consumption (watts)		109	155	155	217	276	354
Discharge Air Temperature Rise (°F)		50	55	60	60	60	60
Air Volume	CFM	456	629	769	961	1345	1537
	M^3/minute	12.9	17.8	21.8	27.5	36.7	45.9
Discharge Air Opening Area	ft^2	1.0	1.0	1.2	1.2	2.0	2.0
	M^2	0.1	0.1	0.1	0.1	0.2	0.2
Output Velocity	FPM	475	656	616	770	668	763
	M/minute	145	200	188	238	196	245
Fan Motor HP [E]	Standard Open	0.0	0.0	0.0	0.1	1/30	1/20
	Optional Enclosed	N.A.	N.A.	N.A.	N.A.	1/4	1/4
Fan Motor RPM		1550	1550	1550	1550	1050	1050
Fan Diameter (inches)		10	10	12	12	16	16
Sound Level	dba @ 15 ft	40	40	40	49	54	55

TECHNICAL DATA - Sizes 150 - 400 (Data applies to both Models UDAP and UDAS unless noted otherwise.)

Size		**150**	**175**	**200**	**225**	**250**	**300**	**350**	**400**
Input Heating Capacity	BTUH	150,000	175,000	200,000	225,000	250,000	300,000	350,000	400,000
	kw	43.9	51.2	58.6	65.9	73.2	87.8	102.5	117.1
Thermal Efficiency (%)		83	83	83	83	83	83	83	83
Output Heating Capacity [A]	BTUH	124,500	145,250	166,000	186,750	207,500	249,000	290,500	332,000
	kw	36.4	42.5	48.6	54.7	60.8	72.9	85.1	97.2
Gas Connection (inches) [B]	Natural	1/2	1/2	1/2	3/4	3/4	3/4	3/4	3/4
	Propane	1/2	1/2	1/2	3/4	3/4	3/4	3/4	3/4
Vent Connection [C] (inches diameter)		5	5	5	5	5	6	6	6
Combustion Air Inlet [C] (inches diameter) - **UDAS only**		6	6	6	6	6	6	6	6
Control Amps (24 volt)		1.0	1.0	1.0	1.0	1.0	1.0	1.0	1.0
Full Load Amps (115 volt)		3.8	3.8	4.6	7.5	7.5	10.7	10.7	10.7
Maximum Over Current Protection [D E]	Standard 115V	15	15	15	15	15	20	20	20
	Optional 208V or 230V	15	15	15	15	15	15	15	15
Normal Power Consumption (watts)		392	392	491	747	747	1086	1086	1086
Discharge Air Temperature Rise (°F)		60	60	60	60	60	60	60	60
Air Volume	CFM	1921	2242	2562	2882	3202	3843	4483	5123
	M^3/minute	54.4	63.5	72.5	81.6	90.7	108.8	126.9	145.1
Discharge Air Opening Area	ft^2	2.6	2.6	2.6	3.5	3.5	4.8	4.8	4.8
	M^2	0.2	0.2	0.2	0.3	0.3	0.5	0.5	0.5
Output Velocity	FPM	752	877	1003	820	911	802	936	1069
	M/minute	229	267	306	250	278	244	285	326
Fan Motor HP [E]	Standard Open	1/6	1/6	1/6	1/4	1/4	1/2	1/2	1/2
	Optional Enclosed	1/4	1/4	1/4	1/4	1/4	1/2	1/2	1/2
Fan Motor RPM		1050	1050	1050	1050	1050	1050	1050	1050
Fan Diameter (inches)		18	18	18	20	20	24	24	24
Sound Level	dba @ 15 ft	51	52	53	56	56	59	61	62

[A] CSA ratings for altitudes to 2000 ft.
[B] Size shown is for gas connection to a single-stage gas valve, not supply line size.
[C] Smaller and/or larger vent and combustion air pipe diameters may be permissible. For Model UDAS refer to the Venting Installation Manual for Separated Combustion Units. For Model UDAP refer to the Venting Installation Manual for Power Vented units. For a Model UDAP with Option AV6, refer to the Venting Installation Manual for Common Venting.
[D] MOCP = 2.25 x (largest motor FLA) + smallest motor FLA. Answer is rounded to the next lower standard circuit breaker size.
[E] Except where indicated, information in this table is based on a heater equipped with a standard 115 volt open fan motor.

INDEX

A
Abnormal Heat Cycle Functions 24
Aircraft Hangars 4
Control Amps 38
Full Load Amps 38
APPENDIX 38

B
Clean the Burner 31
Burner Maintenance 30
Burner Orifice 31
Burner Removal 30

C
California Warning Label 4
Ceiling Suspension Kit 11
Certification 3
Check installation after startup 27
Check the installation prior to startup 26
Check the Lights 35
Chlorine 6
Clearances 7
LED Codes 23, 35
Combustion Air 16
Combustion Air Inlet 38
Combustion Air Pressure Switch 34
Combustion Air Proving (Pressure)Switch 20
Commissioning 26
Confined Space 16
Contact 40
Control Wiring 17
Conversion Kits 13

D
DDC Controls 22
Dimensions 8
Disconnect Switch 35
Door Switch 34
Door Switch - Model UDAS only 21
Downturn Nozzle Kits 7
DSI Integrated Control Module 23, 31

E
Thermal Efficiency 38
Electrical Supply 16

F
Continuous Fan Operation 25
Fan/Blower Off Delay 24
Fan/Blower On Delay 24
Fan Blades 32
Fan Motor 21
Fault Modes 25
Field-Installed Parts 6
Flame Rollout Switch 34
Flame Sensor 32

G
Garages 4
Gas Connection 38
Gas Connection Size 12
Gas Supply 11
Gas Supply Line 12
Gas Valve 21, 33
Gas Valve ON/OFF Control Knob 27

H
Hanger Kits 11
Hanging the Heater 10
HAZARD INTENSITY LEVELS 2
Hazard Labels and Notices 2
Heat Exchanger Maintenance 30
High Altitude Capacity 15
High Altitude Derate 14
High Altitude Kit 6, 7

I
Ignition System 23, 31
Ignition Trial Period 23
Ignitor 32
Input Heating Capacity 38
Installation Codes 4

L
Leak-test 12
Lifting 10
LED lights 23
Limit Control 20, 34
Limit Switch 24
Literature Bag 28
Location 5
Unit Heater Location 4
Location of Controls 29
Lockout 25
Optional vertical louvers 6

M
Maintenance Procedures 30
Maintenance Schedule 29
Massachusetts Requirement 4
Fan Motor 32
Venter Motor 33
Motor HP 38
Multiple Heater Control 22

N
Normal Heat Cycle 23

O
Operating Sequence 27
Option CC1 6
Option CC2 or CC6 3, 6
Option CD 2, 3, or 4 7
Option CK8, CK10, and CK22 11
Option CL31 22
Option CL32 22
Option CM3 21
Option DJ20 or DJ21 6
Options D10 and D14 22
Orifice Pressure 13
Output Heating Capacity 38

P
Plug the unused suspension points 10
Post Purge 24
Power Interruption 25
Preparing for Installation 6
Prepurge 23
Pressure Switch 24
Pressure Switch Settings 20
PRESSURE TESTING SUPPLY PIPING 11

S
Mounting the Sensor 22
Sound Level 38
Spark Gap 32
Startup 26
Stepdown transformer 6
Supply Wiring 17
Suspending 10
Suspending the Heater with Rods 11
Suspend the Heater from 1” Pipe 11
Swivel Connectors 11

T
TECHNICAL DATA 38
Thermostat 21
Unit Mounted Thermostat 21
Throw 4
Transformer 35
Troubleshooting 35, 36
Troubleshooting Flowchart 35
TURN OFF GAS TO THE APPLIANCE 27

U
Uncrating and Inspecting 6

V
Valve Outlet Pressure 13
Vent 35
Vent/Combustion Air 35
Vent/Combustion Air Kit 3
Vent/combustion air kit 6
Vent cap 6
Vent Connection 38
Venter Wheel 33
Venting Manual 3, 5
Vent System Testing Procedure - Model UDAP 27

W
Warranty 4
Weights 10
WHAT TO DO IF YOU SMELL GAS 26
Wiring Connections 17
Wiring Diagram for Model UDAP or Model UDAS, Single Stage 18
Wiring Diagram for Model UDAP or Model UDAS, Two Stage Gas Valve 19
Wiring Diagrams 18

INSTALLATION RECORD - to be completed by the installer:

Installer:

Name _____

Company _____

Address _____

_____

_____

Phone _____

Distributor (company from which the unit was purchased):

Company _____

Contact _____

Address _____

_____

_____

Phone _____

Model _____ **Serial No.**_____**Date of Installation** _____

SPECIFIC INSTALLATION NOTES: (i.e. Location, Amps, Gas Pressure, Temperature, Voltage, Adjustments, Warranty, etc.)

_____

_____

_____

_____

_____

BUILDING OWNER OR MAINTENANCE PERSONNEL:

For service or repair

- Contact the installer listed above.
- If you need additional assistance, contact the Reznor Distributor listed above.
- For more information, contact your Reznor Representative by calling 1-800-695-1901.

Reznor/Thomas & Betts
150 McKinley Avenue
Mercer, PA 16137

www.RezSpec.com

(800) 695-1901

©2011 Thomas & Betts Corporation, All rights reserved.
Trademark Notes: Reznor®, TCORE2® , and V3® are registered in at least the United States.
All other trademarks are the property of their respective owners.
04/11 Form I-UDA (Version B.1)

Thomas&Betts